QM2 Installation Guide

Learn how to install a QM2 card into your NAS

Topics

Unpacking Instructions & Package Contents
Installing an M.2 SSD onto a QM2 Card
Installing a QM2 Card in a NAS
Additional information

Unpacking Instructions and Package Contents

Unpacking Instructions

Prior to unpacking your QM2 expansion card, ensure that all system requirements are met.

Inspect each item in the packet contents. Contact your reseller for any damaged or missing parts.

Package Contents

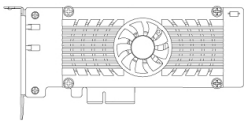

QM2 with cooling module;
Low-profile bracket (preinstalled)

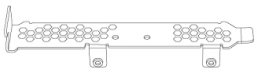

Full-height bracket

Low-profile flat bracket

Thermal pad kit

Rubber pad (black) kit

M.2 SSD screw pack

Installing an M.2 SSD onto a QM2 Card

1. Prepare the M.2 SSD
    1. Remove protective film from both sides of thermal pad and place thermal pad on SSD controller.

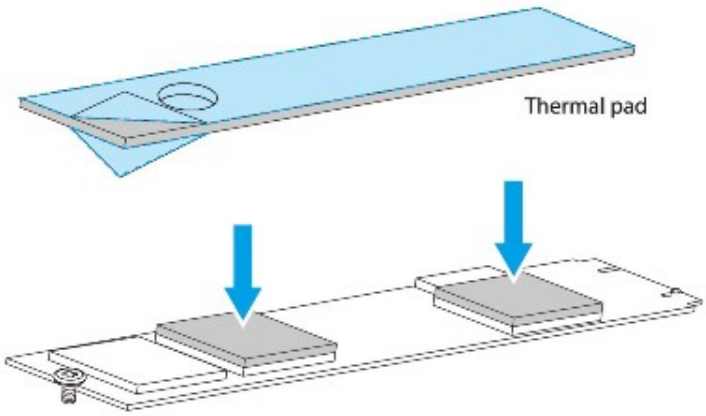

    2. Remove protective film from rubber pad (black) and stick rubber pads on the bottom side of the SSD as needed.

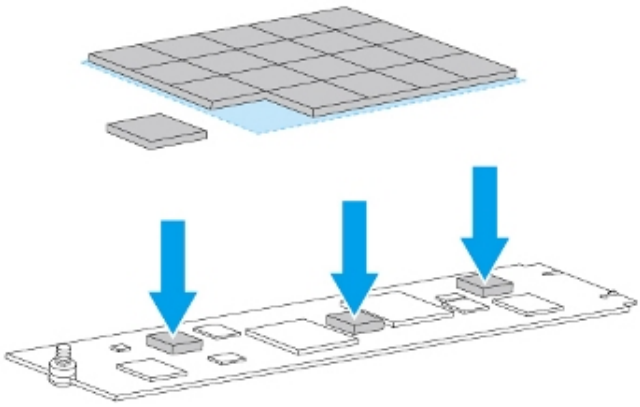

Note: the thermal and rubber pads work together to transfer heat from the SSD controller to the cooling module.

2. Unscrew the cooling module from the QM2 board.

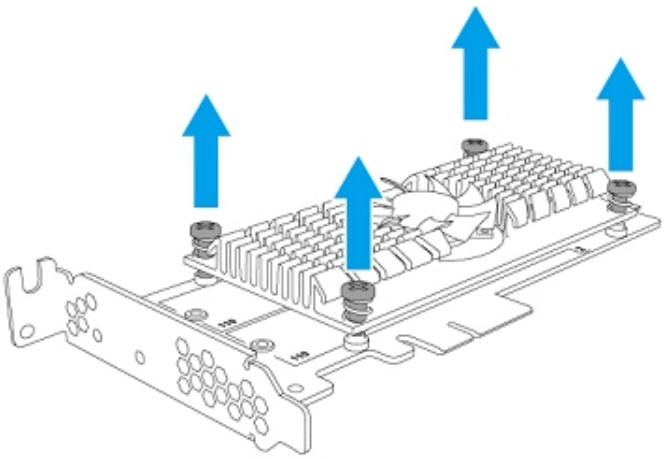

3. Remove the cooling module from the QM2 board without disconnecting the power connector.

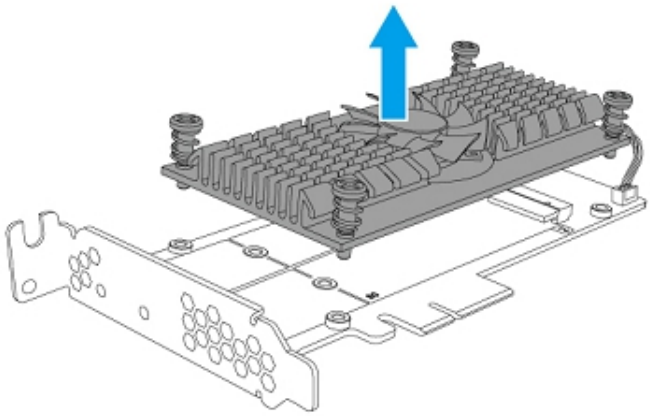

4. Remove the rubber foam from the QM2.

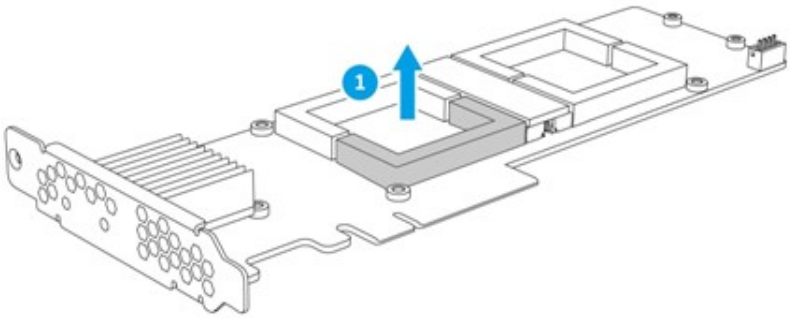

5. Insert M.2 SSD onto QM2.

1. Insert M.2 SSD into M.2 socket.

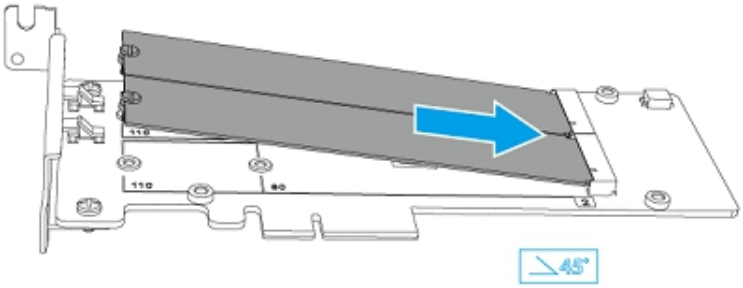

2. Secure M.2 SSD with screw.

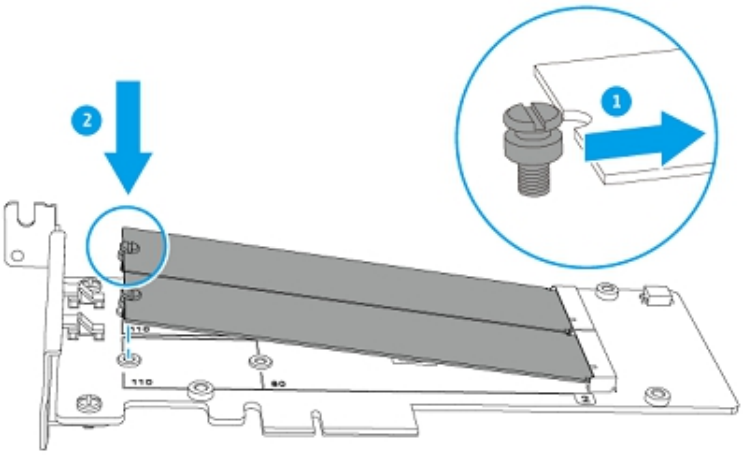

Note: Ensure that the thermal sensor is in contact with the M.2 SSD.

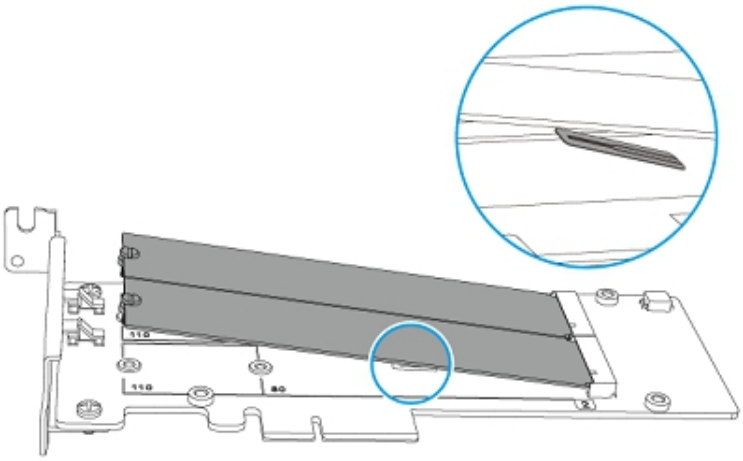

6. Attach the cooling module to the QM2 board and secure screws.

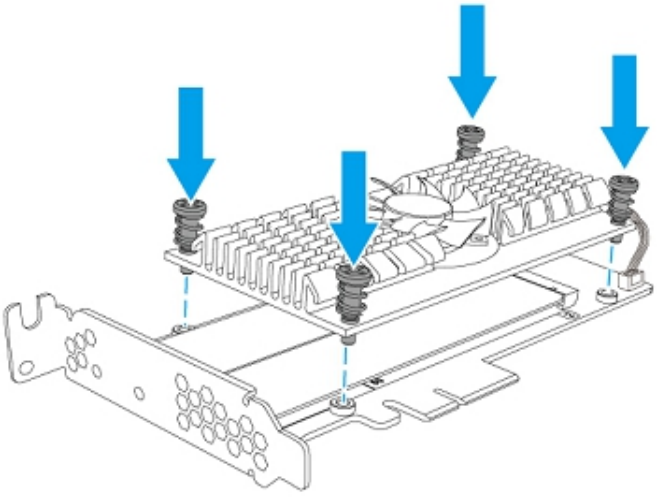

Installing a QM2 Card in a NAS

1. Power off the NAS.
2. Unplug the power cord from the electrical outlet.
3. Disconnect all cables and external attachments.
4. Remove the screws on the back of the NAS that connect the case cover to the chassis.

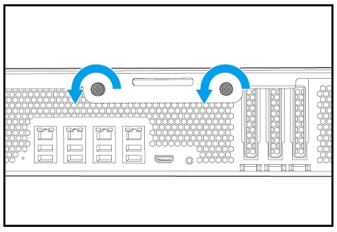

Use low-profile bracket

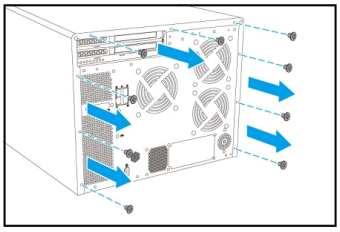

Use full-height bracket

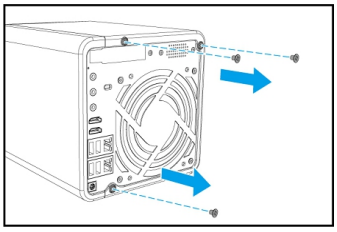

Use low-profile flat bracket

Note: Refer to your Hardware User Guide for details.

5. Power off the NAS.

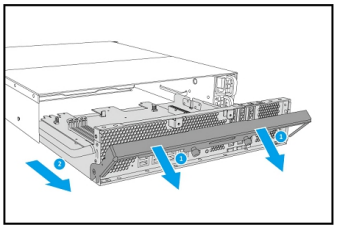

Use low-profile bracket

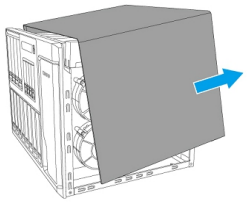

Use full-height bracket

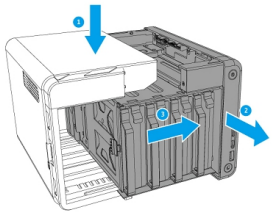

Use low-profile flat bracket

6. Remove the screw from the PCIe slot cover and then pull the cover off.

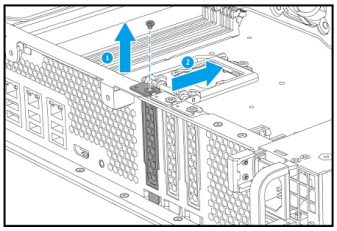

Use low-profile bracket

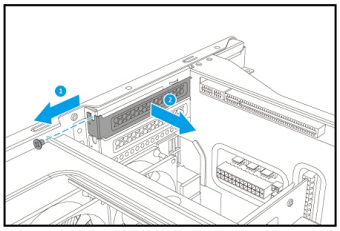

Use full-height bracket

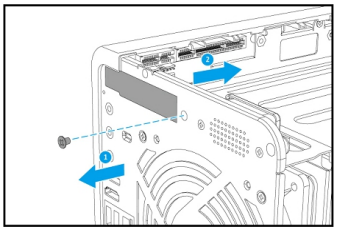

Use low-profile flat bracket

7. Identify the bracket required for your NAS.

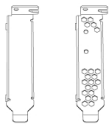

Use low-profile bracket

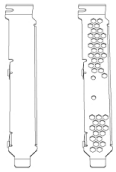

Use full-height bracket

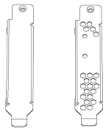

Use low-profile flat bracket

8. Change PCIe bracket on the QM2 card if necessary.
    1. Remove screws from existing bracket.

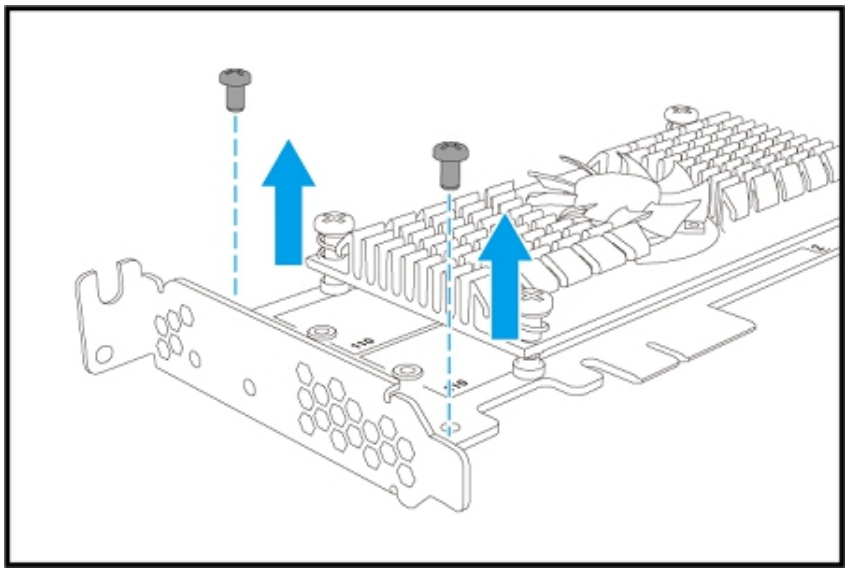

    2. Remove bracket from card.

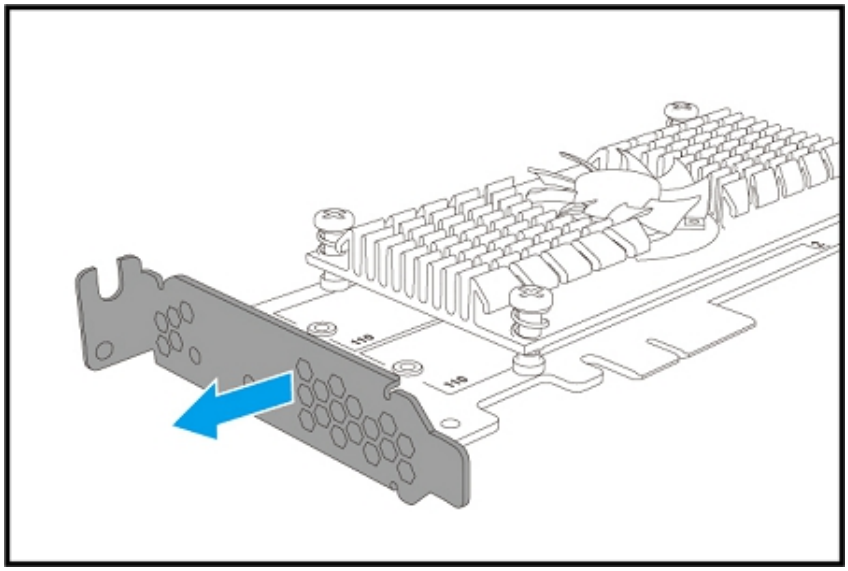

3. Attach required bracket to card using the same screws.

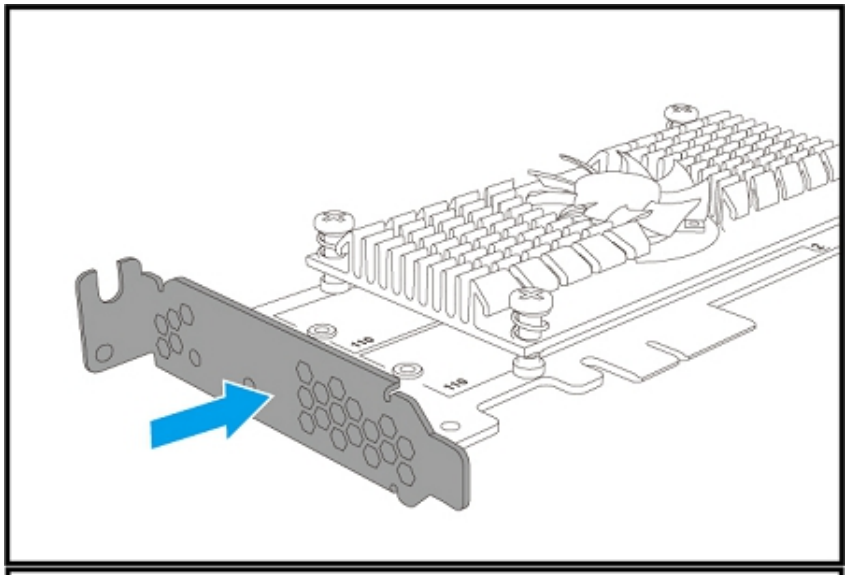

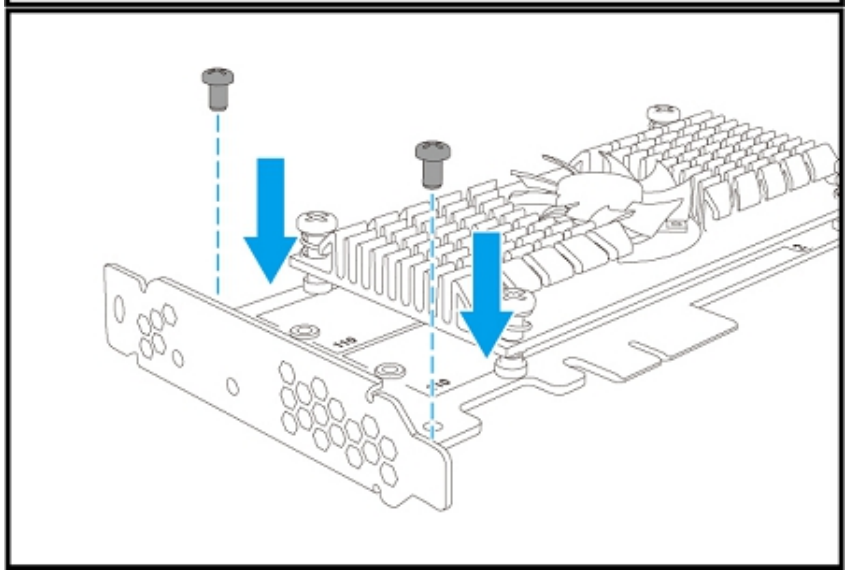

9. Install the QM2 card.

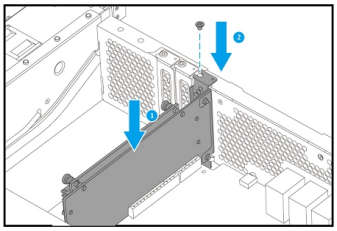

Use low-profile bracket

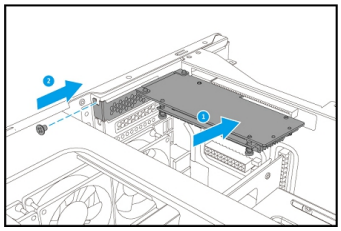

Use full-height bracket

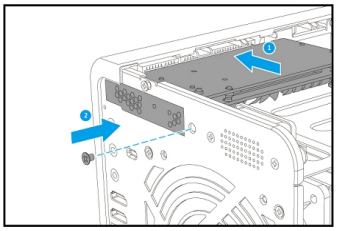

Use low-profile flat bracket

1. Hold the expansion card by the edges.
2. Insert the card into the slot.
3. Attach the screw

10. Attach the case cover.

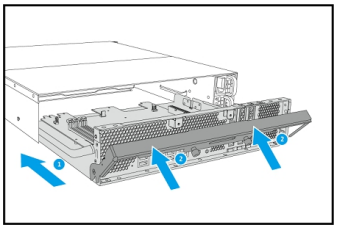

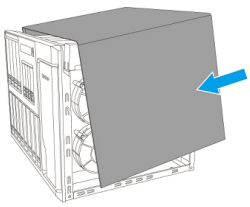

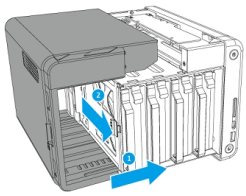

Use low-profile bracket	Use full-height bracket	Use low-profile flat bracket

11. Attach the screws to the back side of the case.

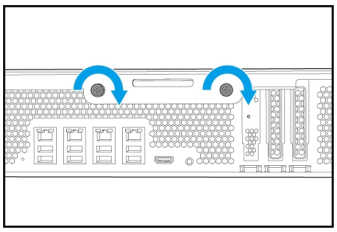 Use low-profile bracket	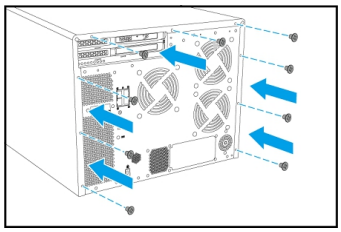 Use full-height bracket	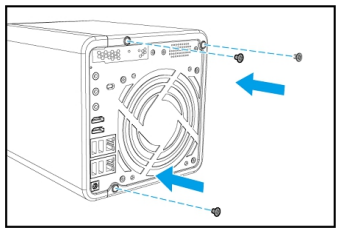 Use low-profile flat bracket

12. Connect all cables and external attachments.
13. Power on the NAS.
14. Verify that the SSD on the QM2 card is recognized by the NAS.
    1. Log on to QTS as administrator.
    2. Go to “Main Menu” > “Storage Manager” > “Disk/VJBOD”