Enterprise Network Video Recorder

UniFi Protect

Enterprise
Network Video Recorder
Installation Video

Watch the Tutorial

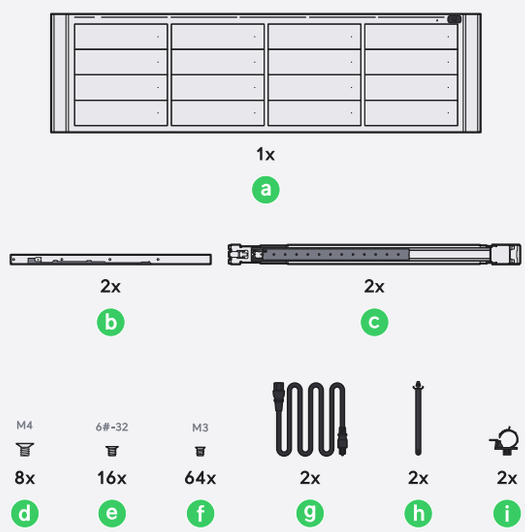

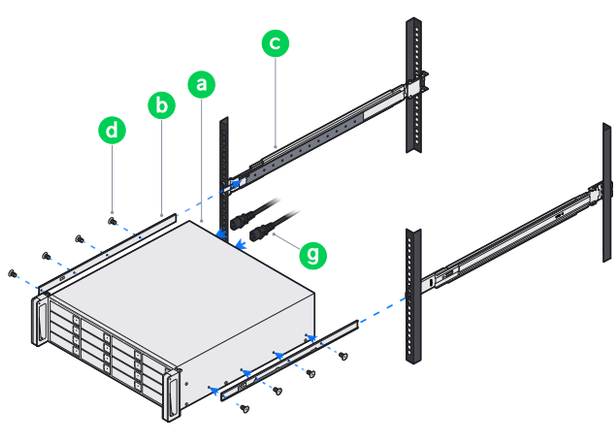

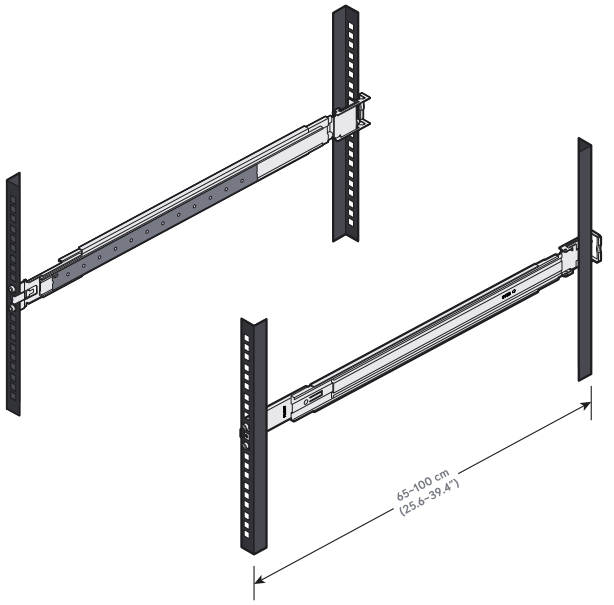

1

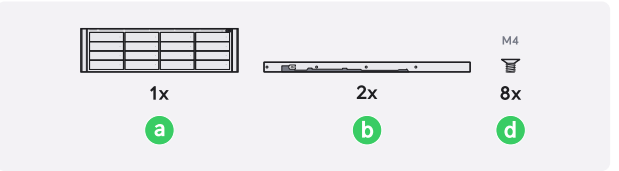

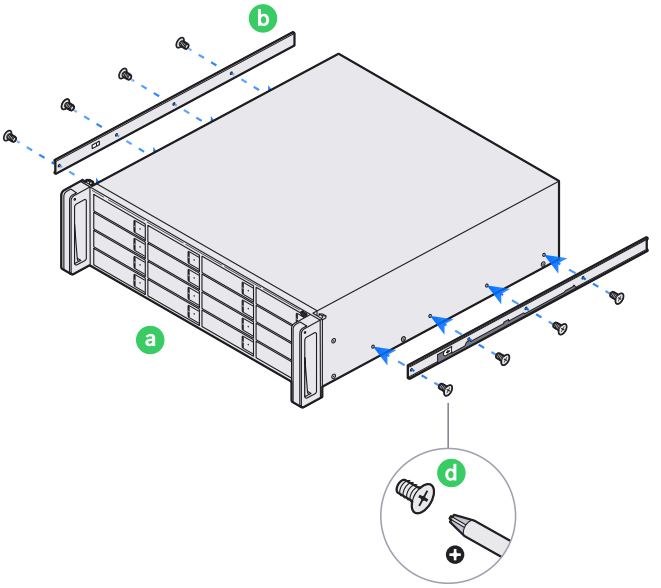

2

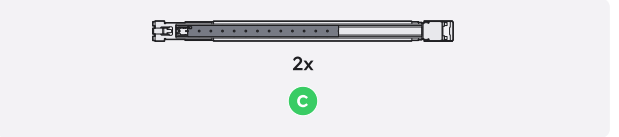

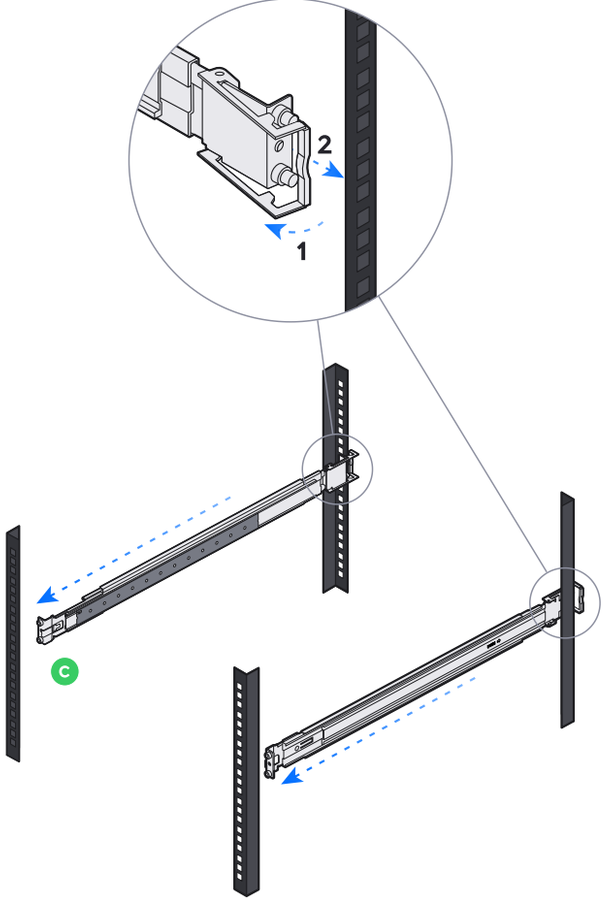

3

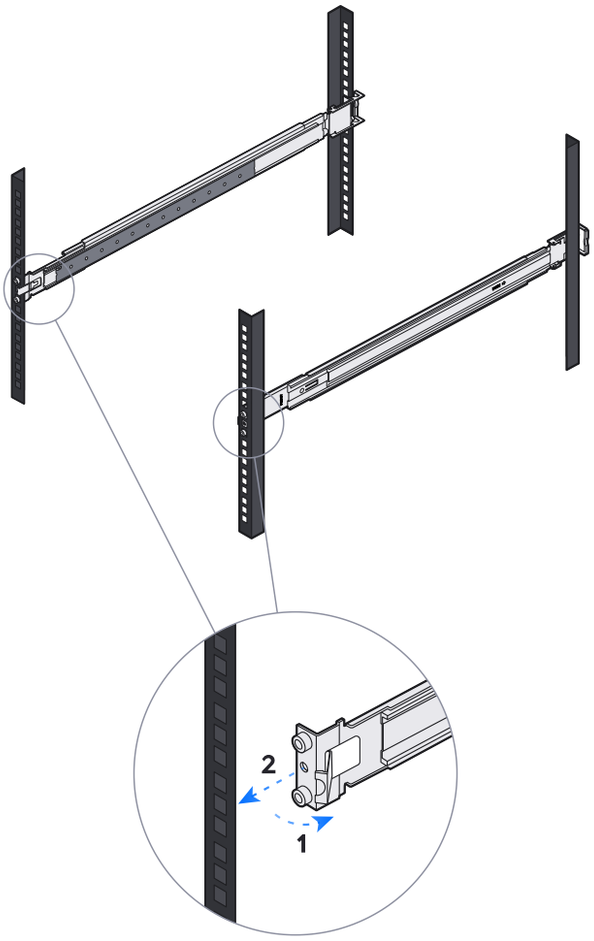

4

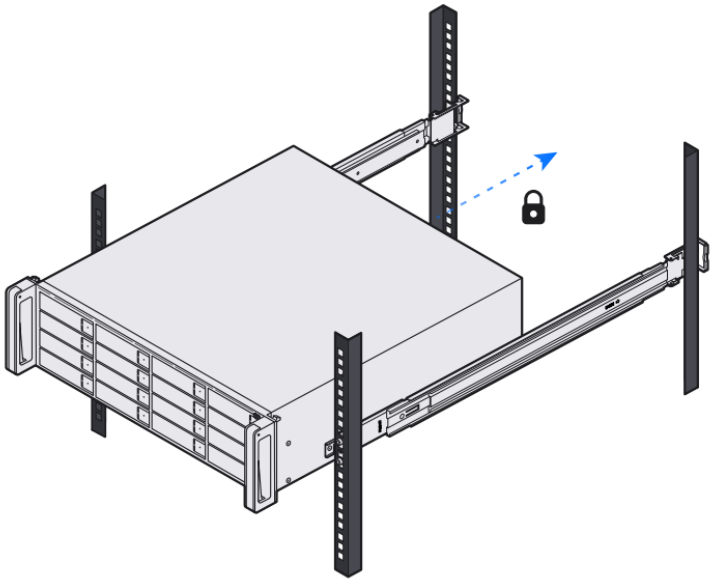

5

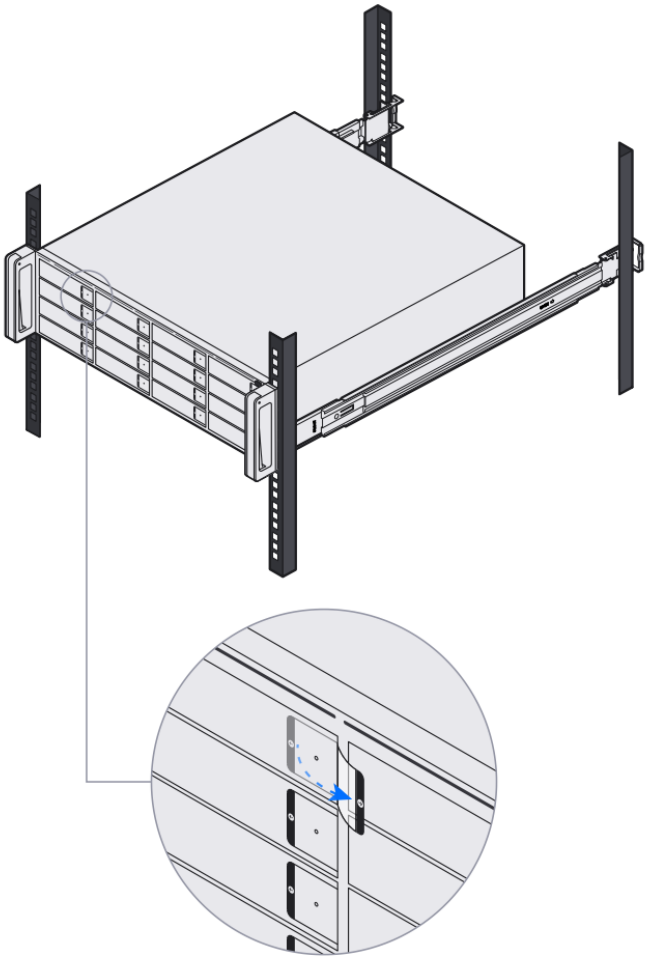

6

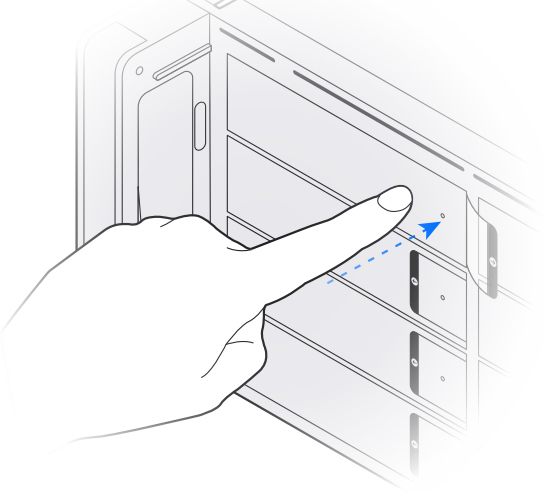

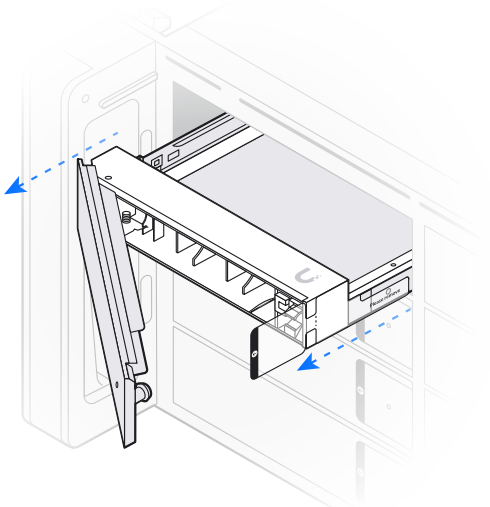

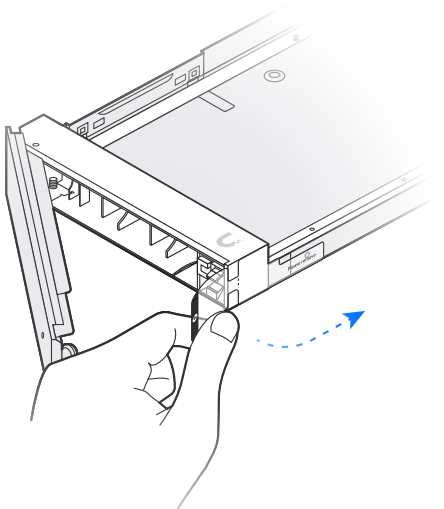

7

6#-32	M3
1x	4x
e	f

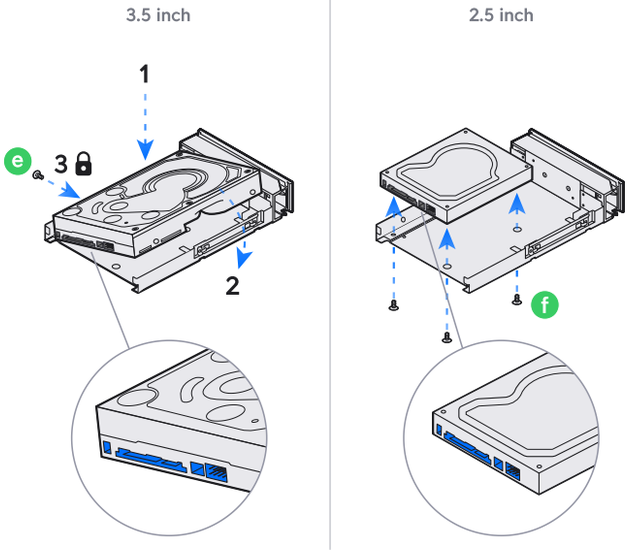

8

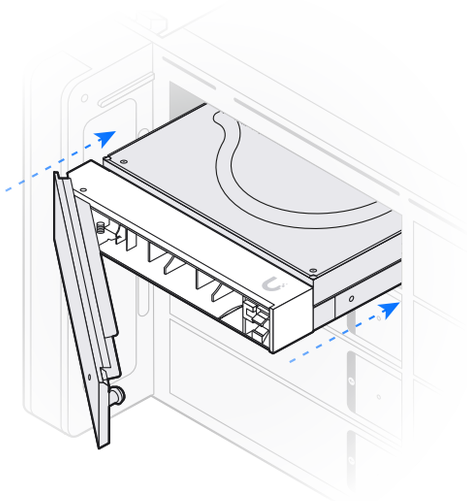

9

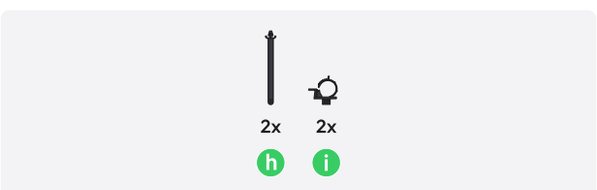

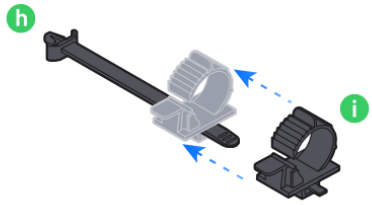

10

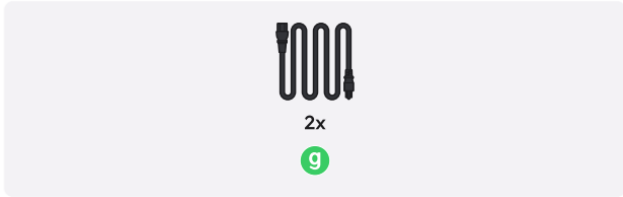

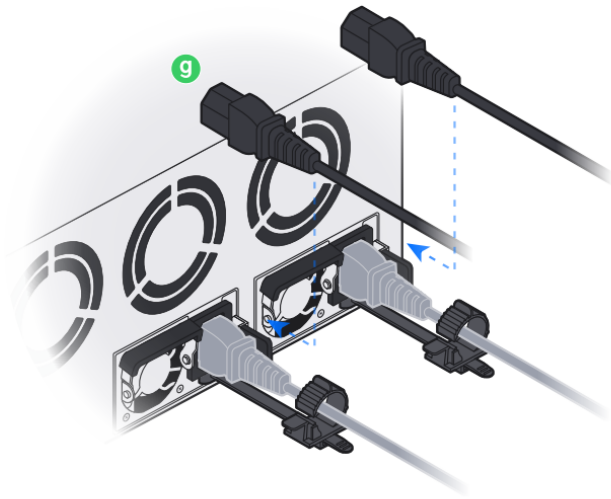

11

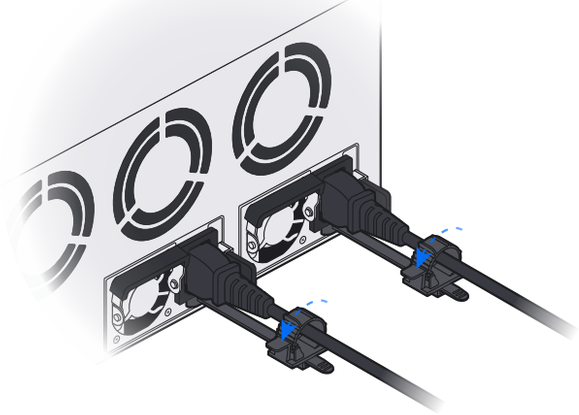

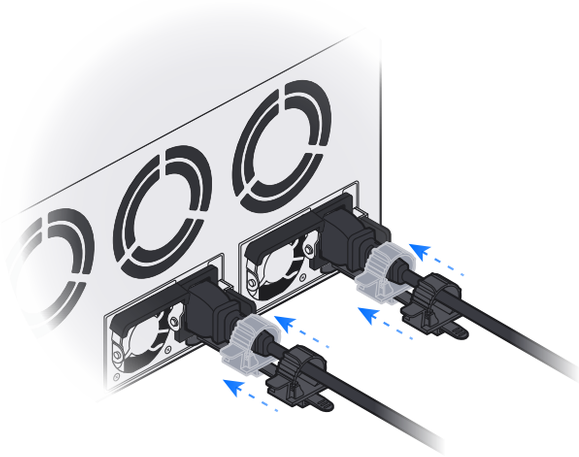

12

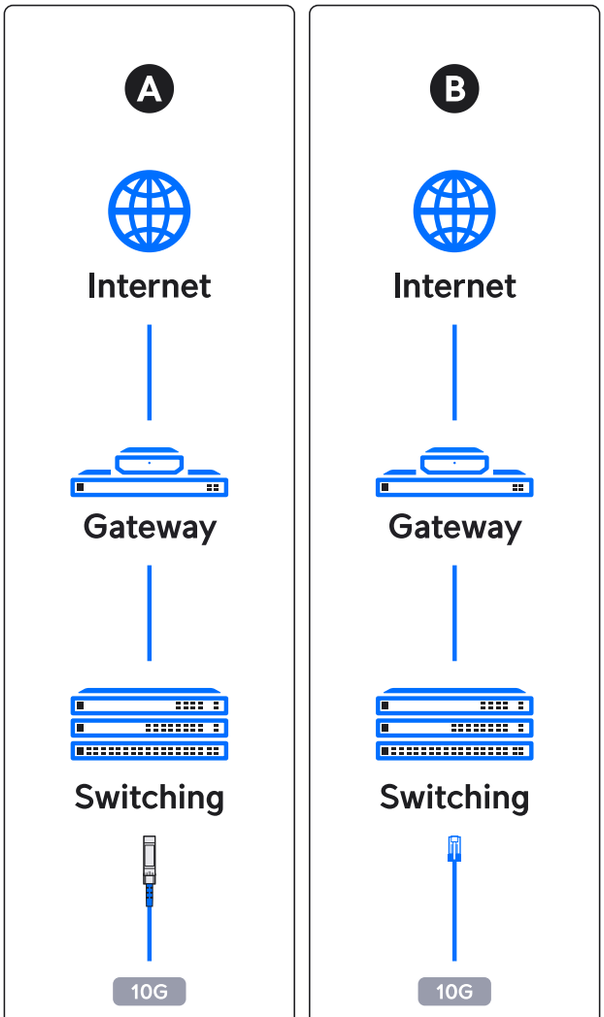
A
Internet
Gateway
Switching
10G
B
Internet
Gateway
Switching
10G

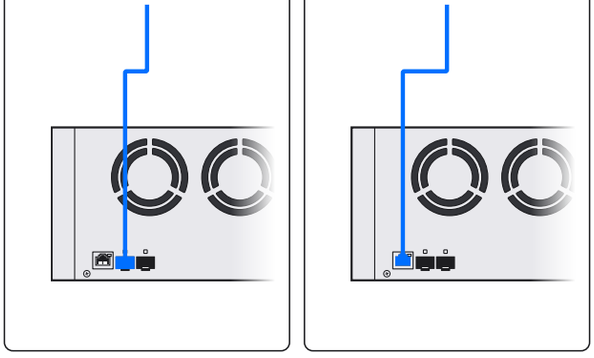

13

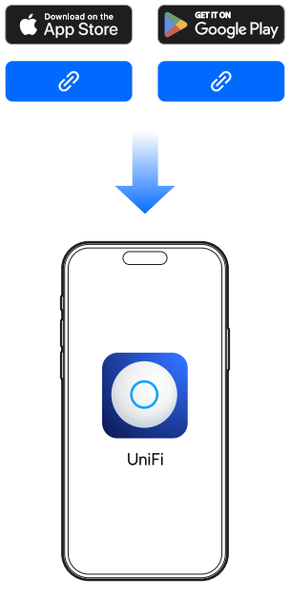

14

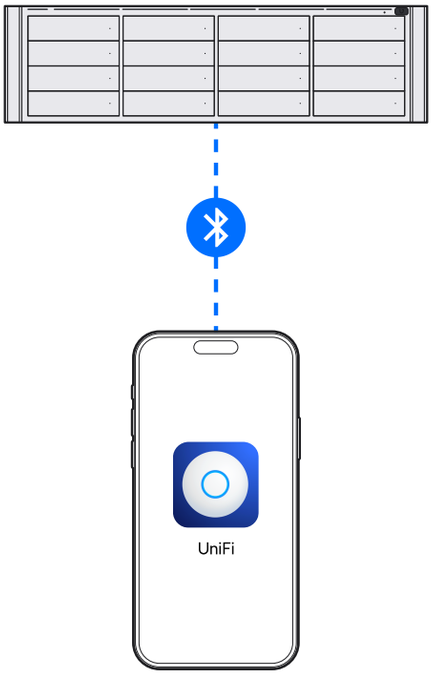

1

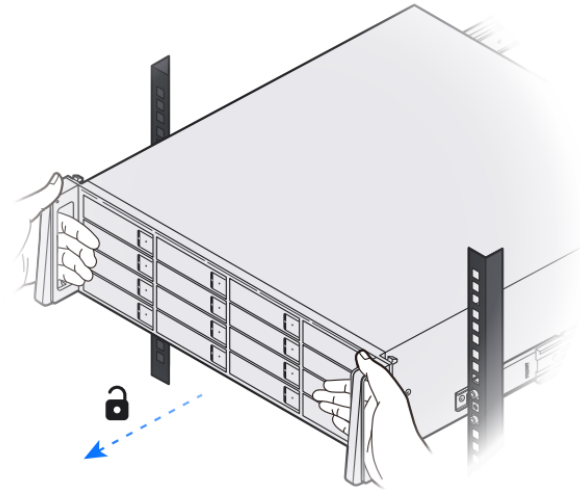

2

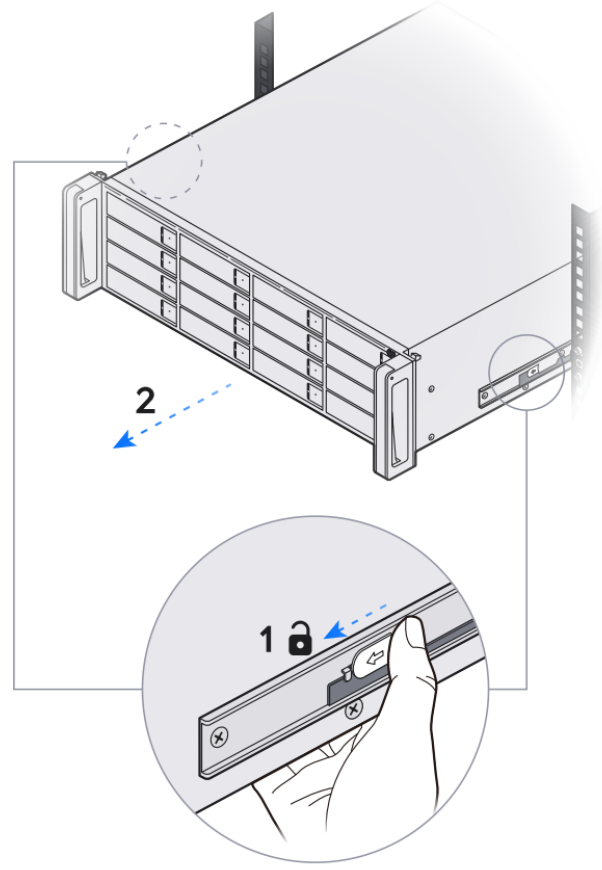

If you need further assistance, visit our Help Center or contact Ubiquiti Support.

©2024 Ubiquiti Inc. All rights reserved. Ubiquiti, the Ubiquiti U logo, UniFi Protect and UniFi are trademarks or registered trademarks of Ubiquiti Inc. in the United States and in other countries. Apple and the Apple logo are trademarks of Apple Inc., registered in the US, and other countries. App Store is a service mark of Apple Inc., registered in the US, and other countries. Android, Google, Google Play, the Google Play logo are trademarks of Google LLC.