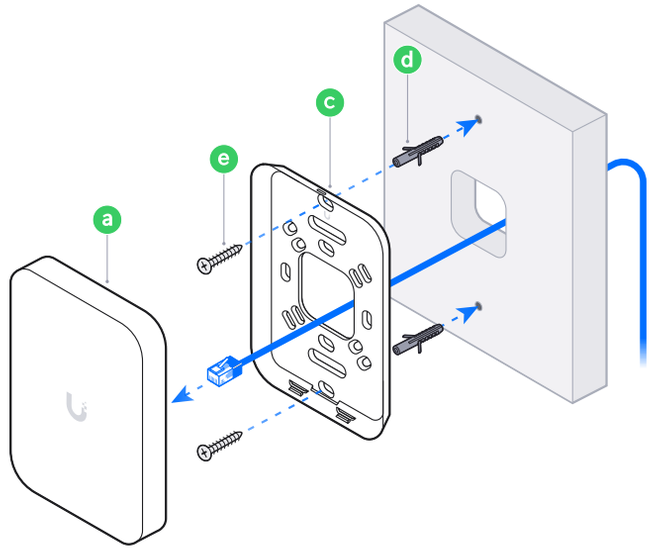

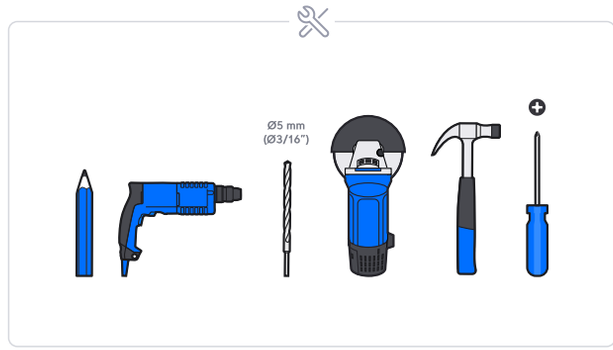

1

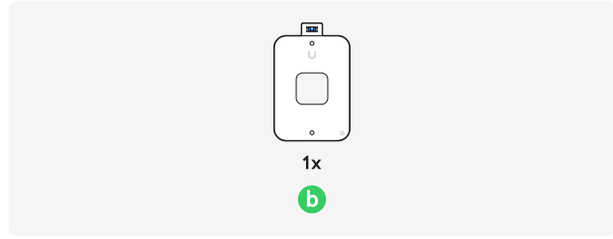

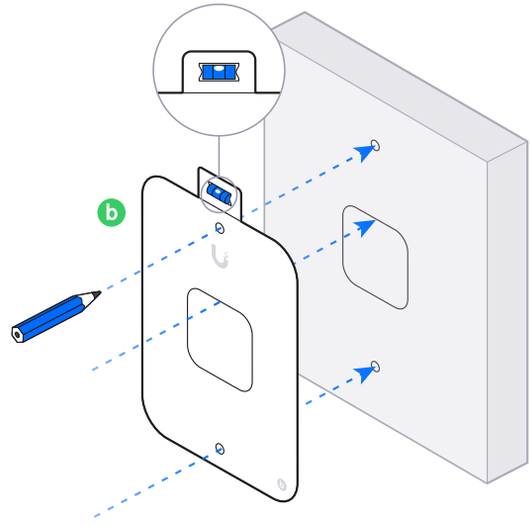

2

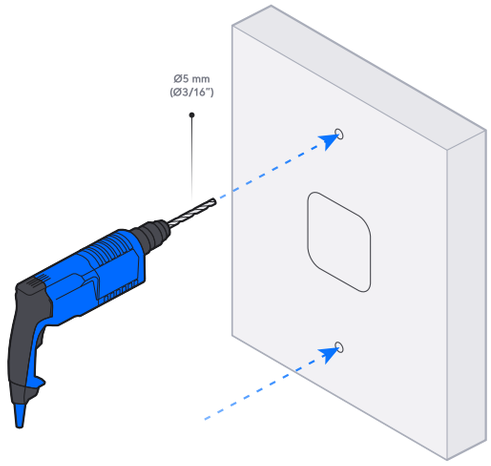

3

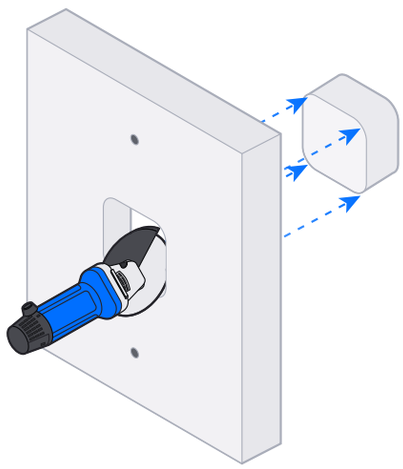

4

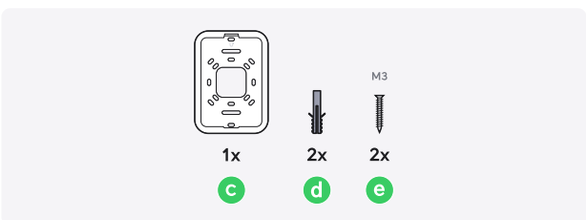

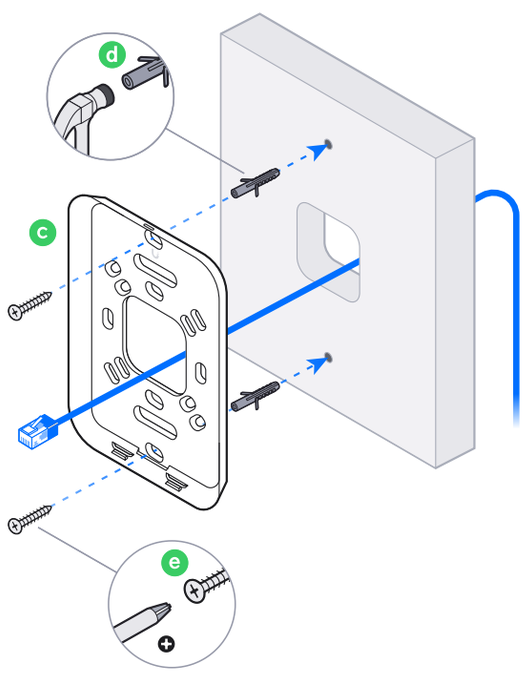

5

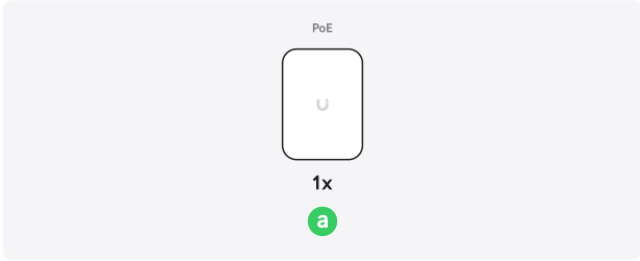

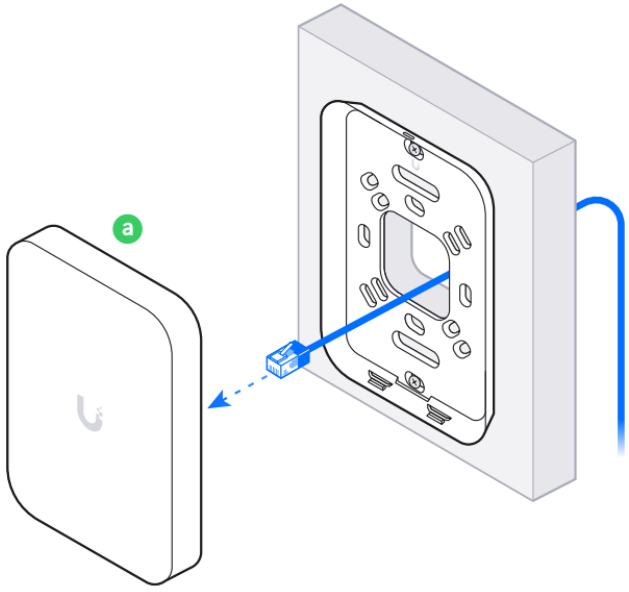

6

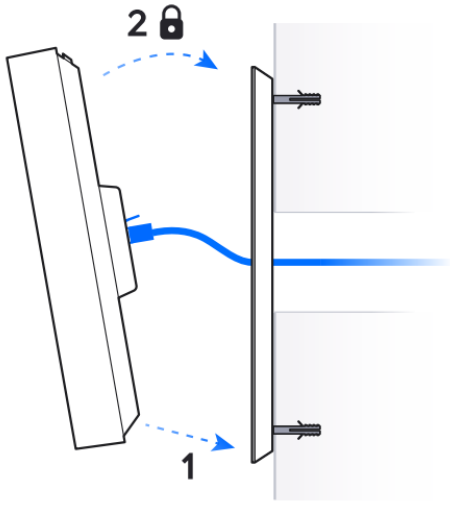

7

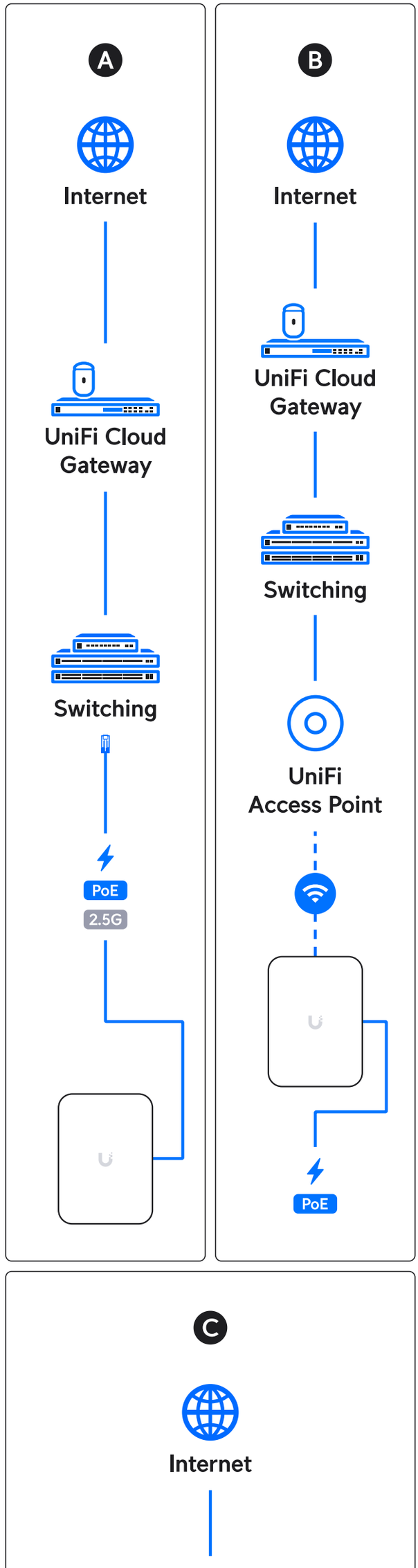
A
Internet
UniFi Cloud Gateway
Switching
PoE
2.5G
B
Internet
UniFi Cloud Gateway
Switching
UniFi Access Point
PoE
C
Internet

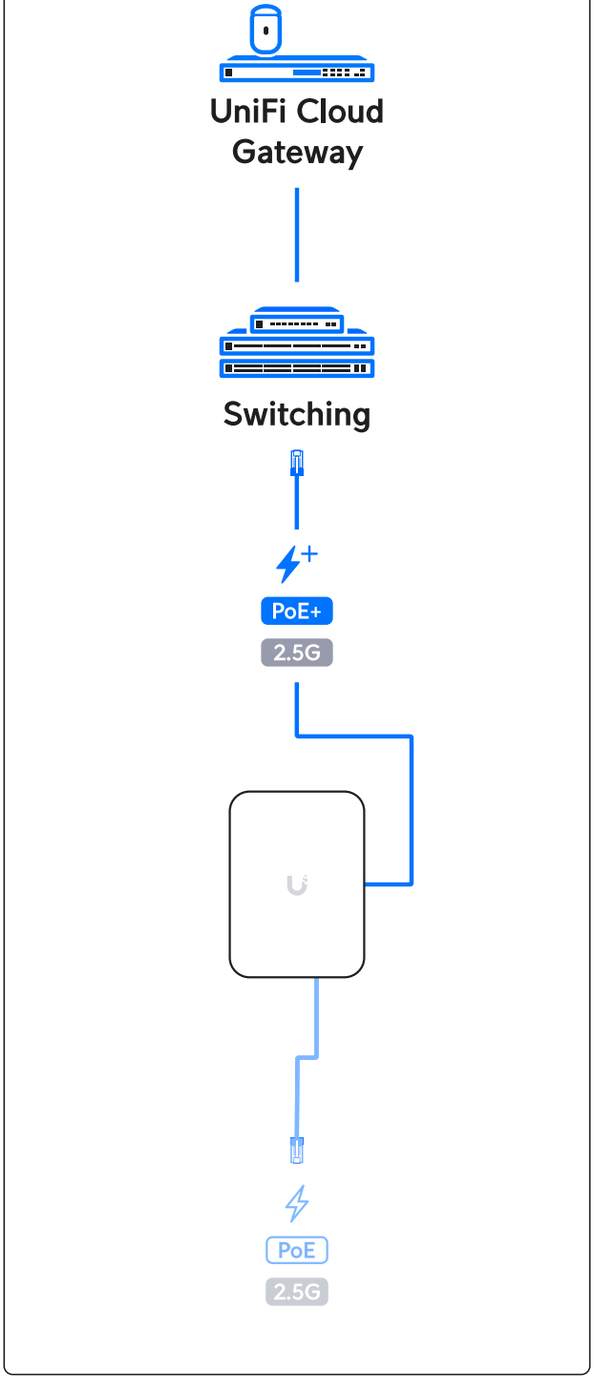
UniFi Cloud Gateway
Switching
PoE+
2.5G
PoE
2.5G

8

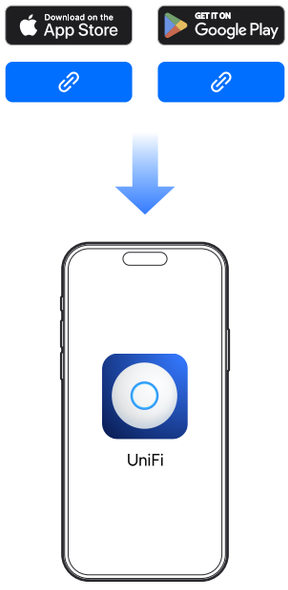
Download on the App Store
GET IT ON Google Play
UniFi

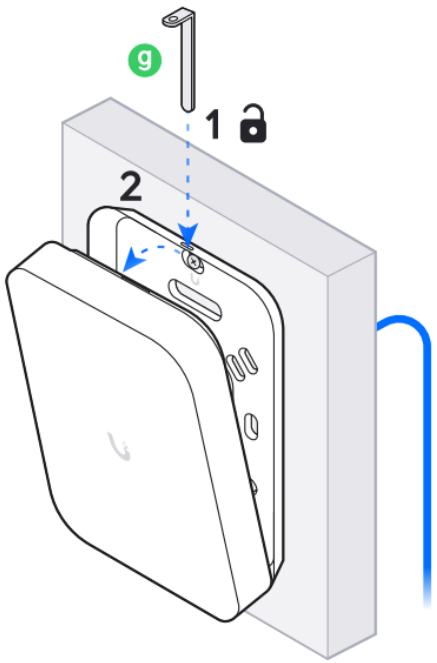

If you need further assistance, visit our Help Center or contact Ubiquiti Support.

©2024 Ubiquiti Inc. All rights reserved. Ubiquiti, the Ubiquiti U logo, and UniFi are trademarks or registered trademarks of Ubiquiti Inc. in the United States and in other countries. Apple and the Apple logo are trademarks of Apple Inc., registered in the U.S. and other countries. App Store is a service mark of Apple Inc., registered in the U.S. and other countries. Android, Google, Google Play, and the Google Play logo are trademarks of Google LLC.