Building Bridge XG

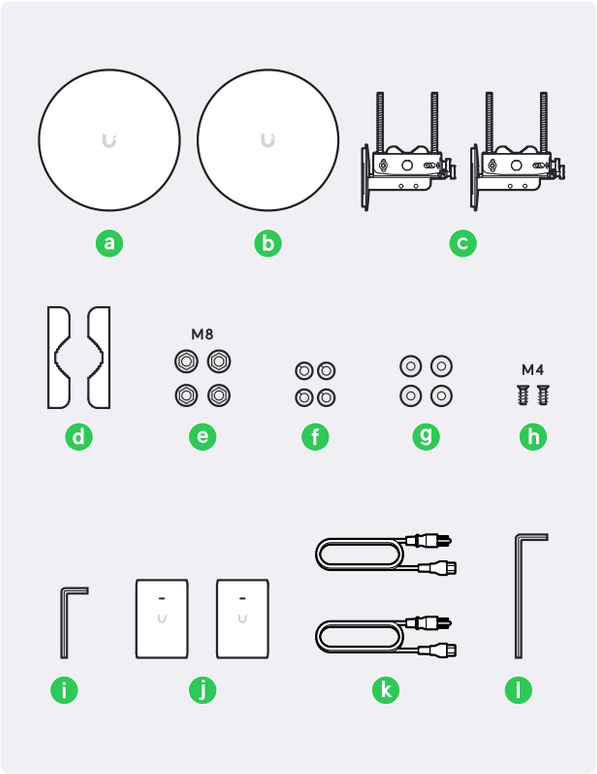

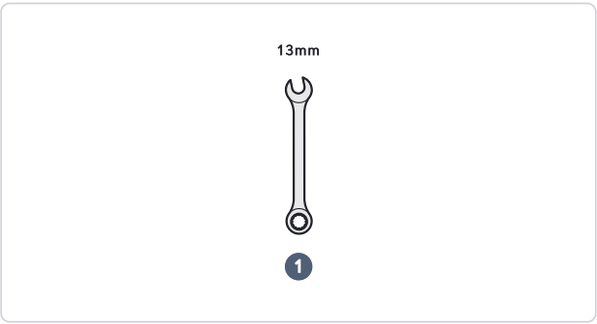

1

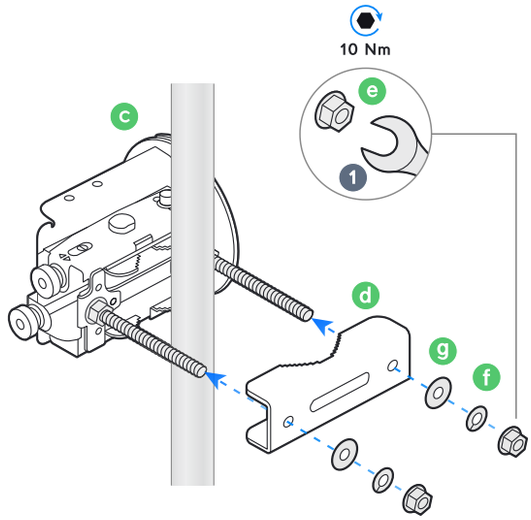

2

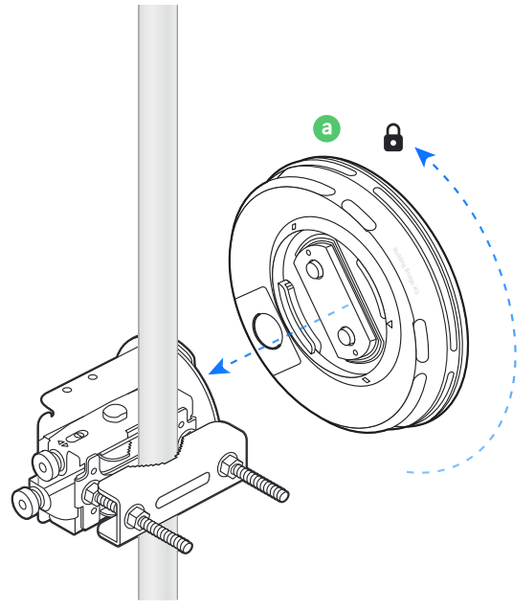

3

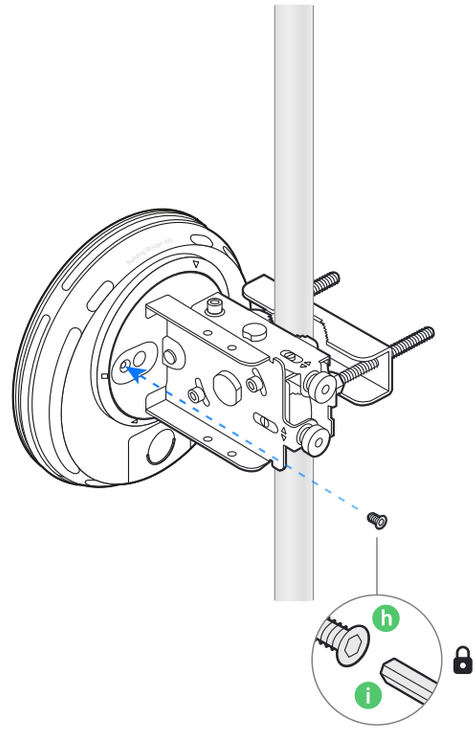

4

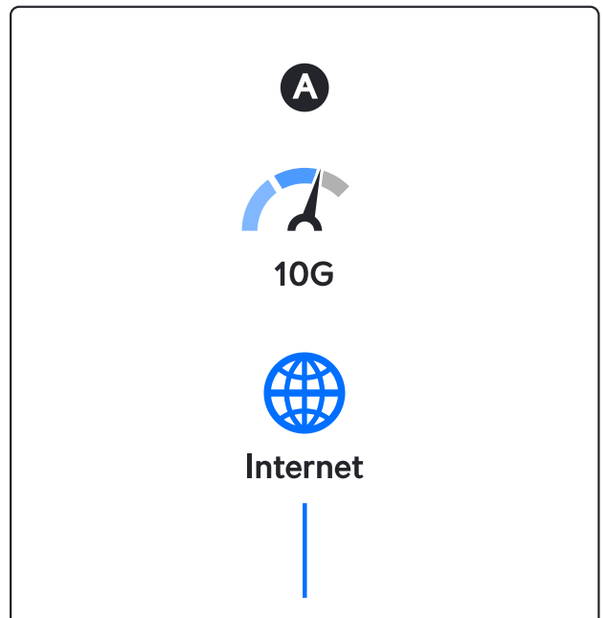

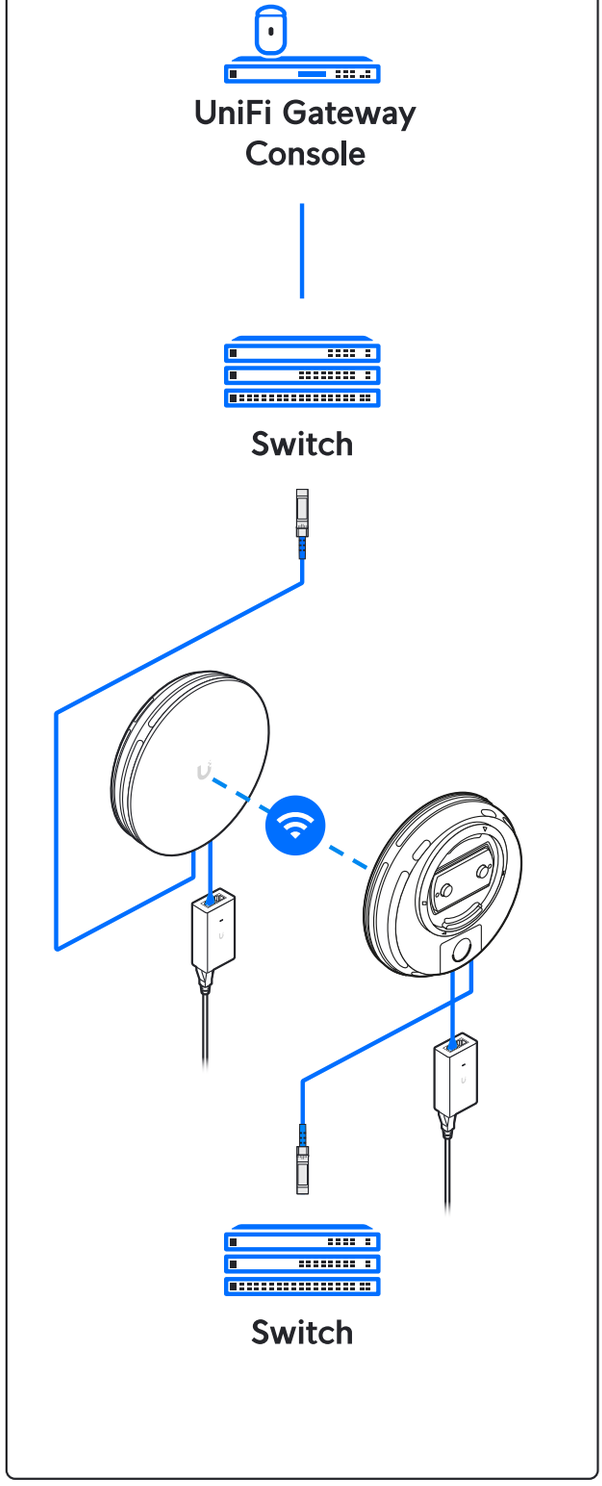
UniFi Gateway
Console
Switch
Switch

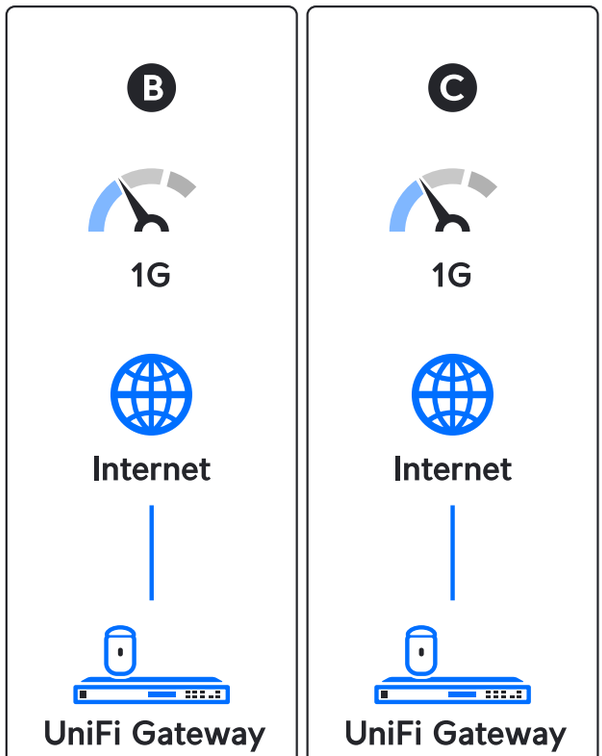
B
1G
Internet
UniFi Gateway
C
1G
Internet
UniFi Gateway

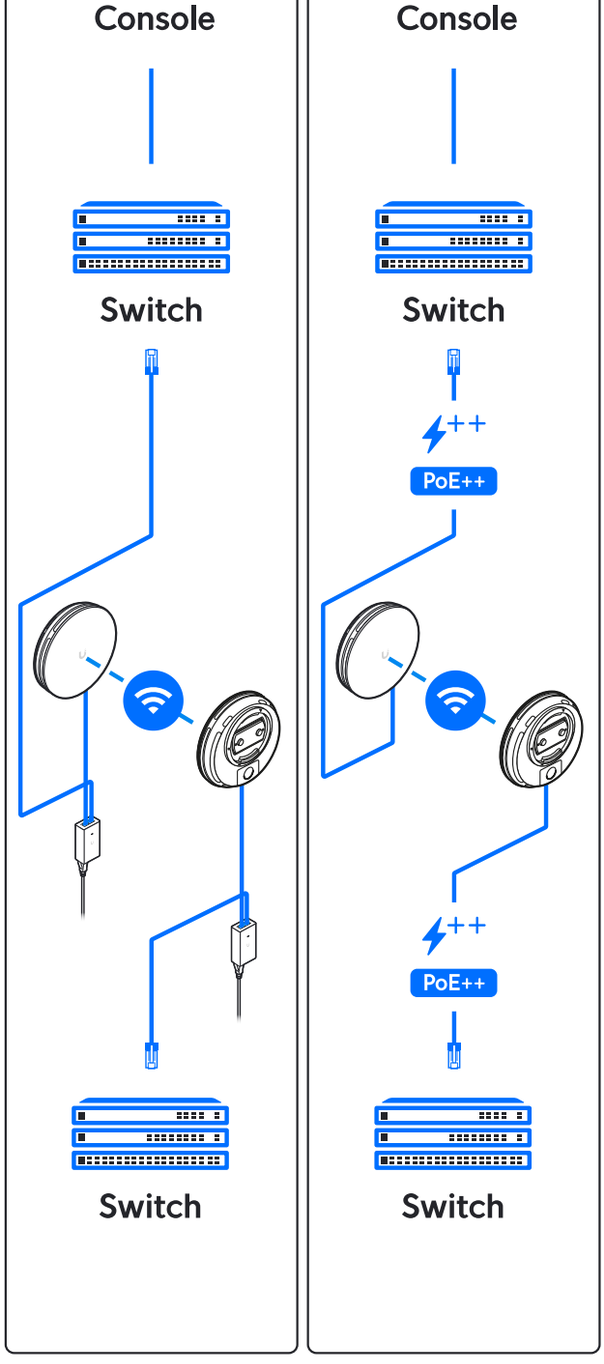
Console
Switch
Switch
Console
Switch
PoE++
PoE++
Switch

5

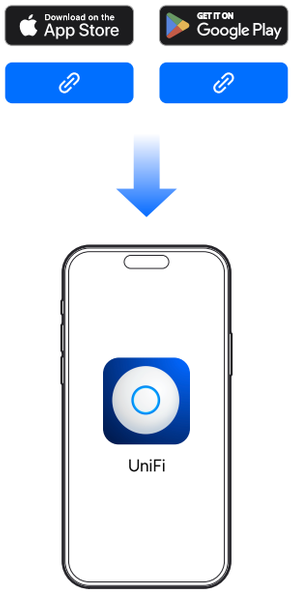
Download on the App Store
GET IT ON Google Play
UniFi

6

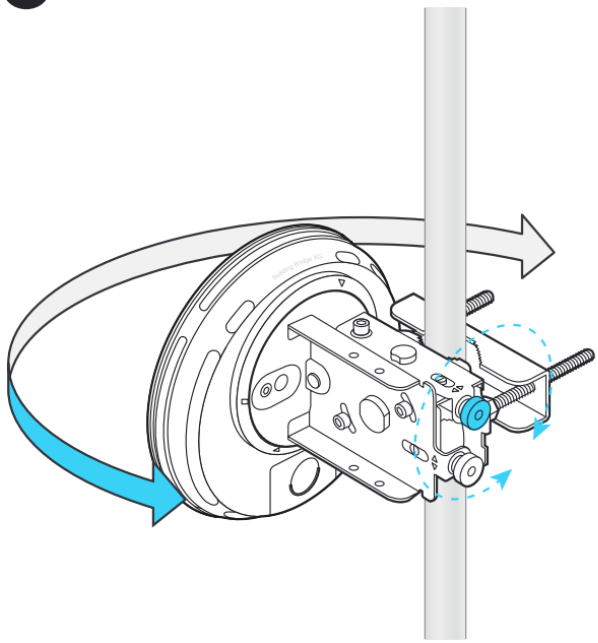

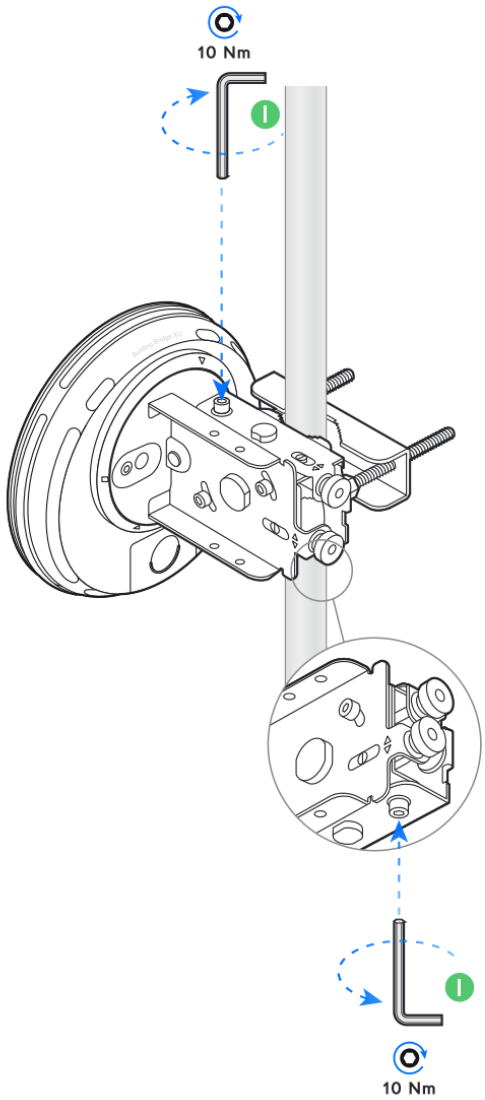

7

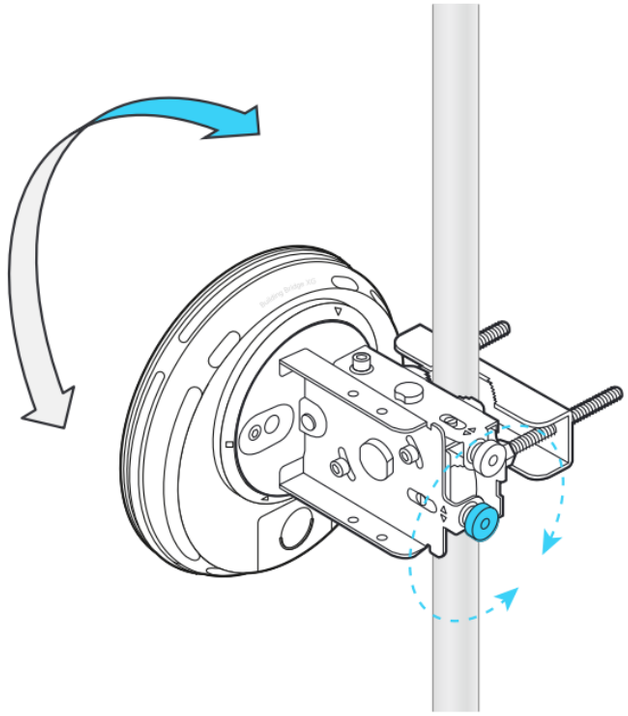

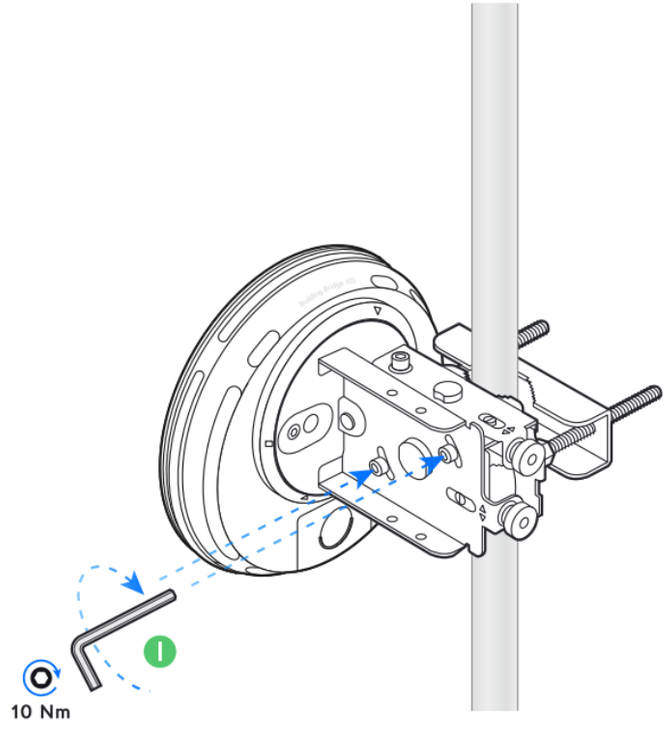

If you need further assistance, visit our Help Center or contact Ubiquiti Support.

©2021 Ubiquiti Inc. All rights reserved. Ubiquiti, Ubiquiti Networks, the Ubiquiti U logo, UniFi, and UniFi Network are trademarks or registered trademarks of Ubiquiti Inc. in the United States and and in other countries. App Store and the Apple logo are trademarks of Apple Inc., registered in the U.S. and other countries. Google Play and the Google Play logo are trademarks of Google LLC.
All other trademarks are the property of their respective owners.