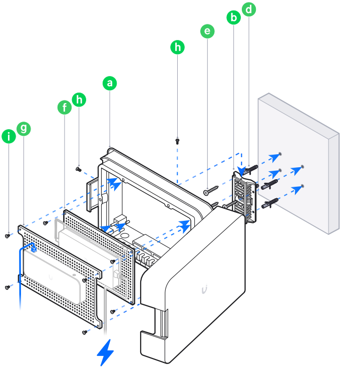

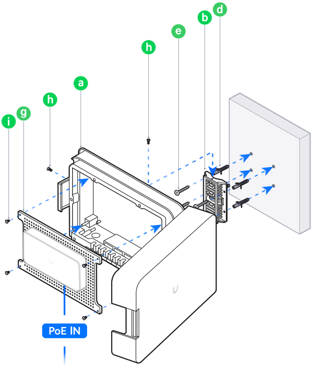
d
b
e
h
a
h
g
i
PoE IN

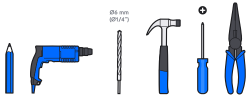

1

1x

c

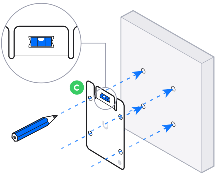

2

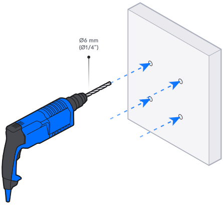

3

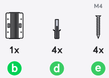
M4
1x
b
4x
d
4x
e

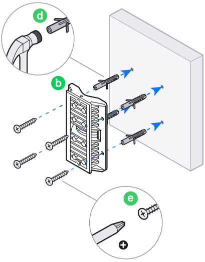

4

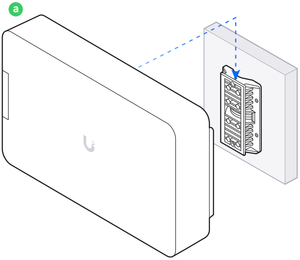

5

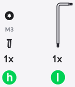

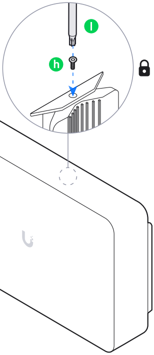

6

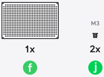

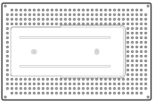

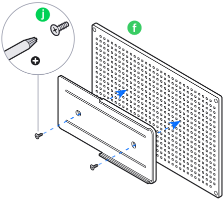

7

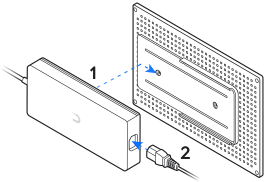

8

M3

4x

i

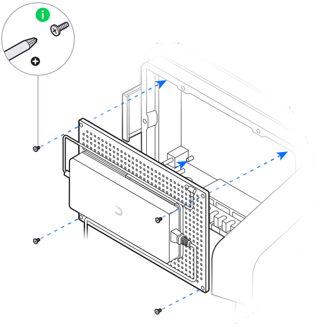

9

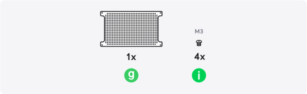

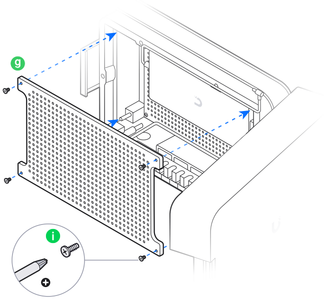

10

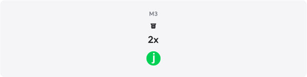

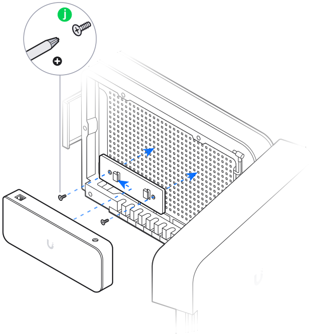

11

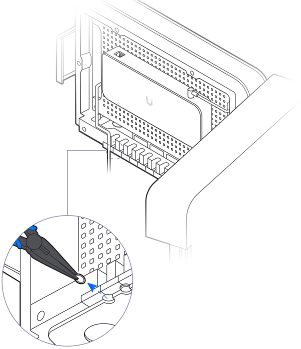

12

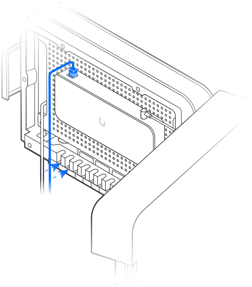

13

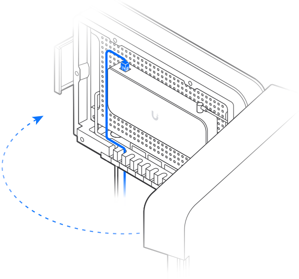

14

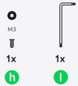

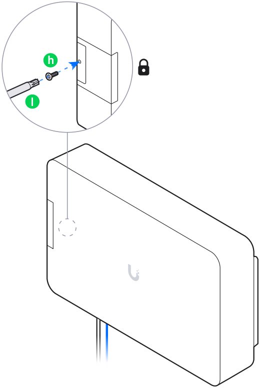

If you need further assistance, visit our Help Center or contact Ubiquiti Support.

©2025 Ubiquiti Inc. All rights reserved. Ubiquiti and the Ubiquiti U logo are trademarks or registered trademarks of Ubiquiti Inc. in the United States and in other countries.