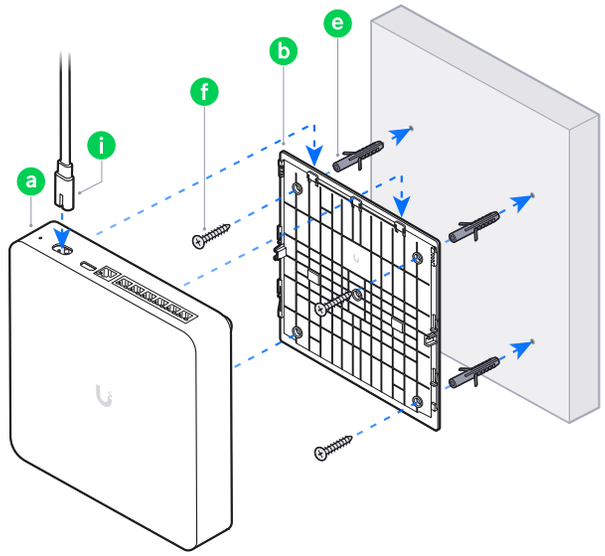

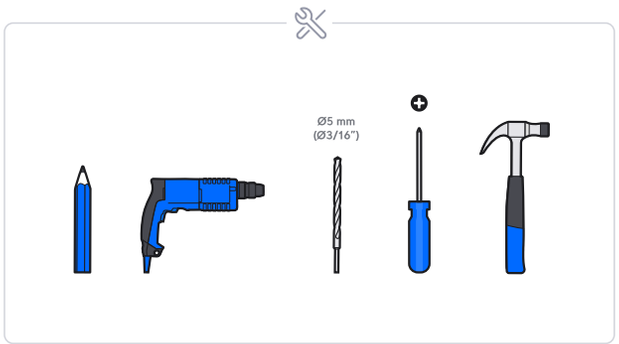

1

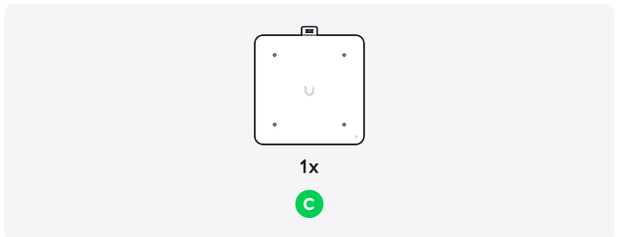

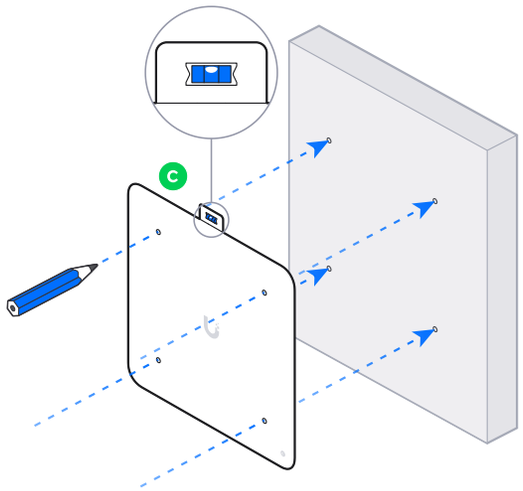

2

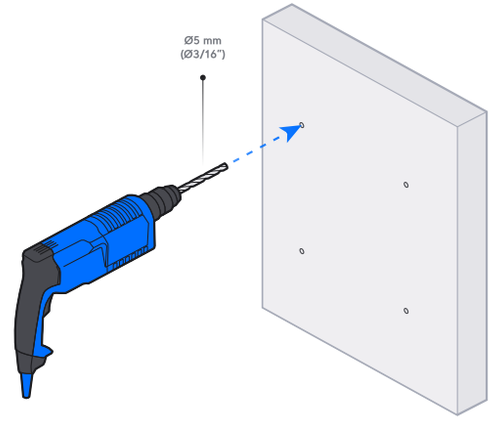

3

4x

e

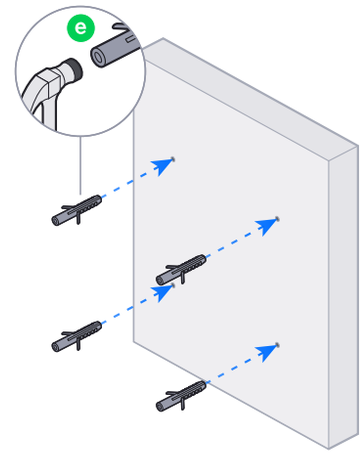

4

1x

a

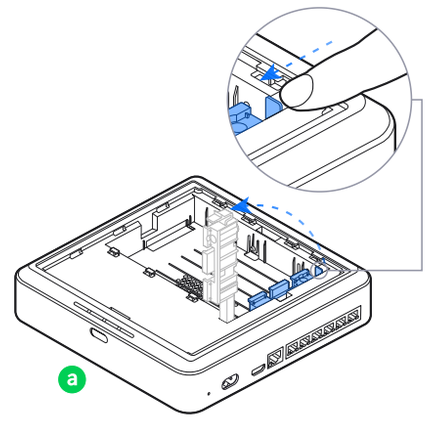

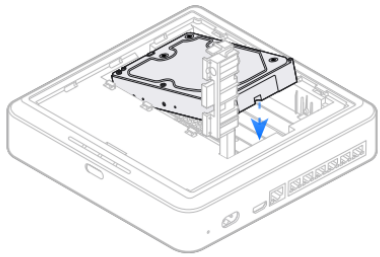

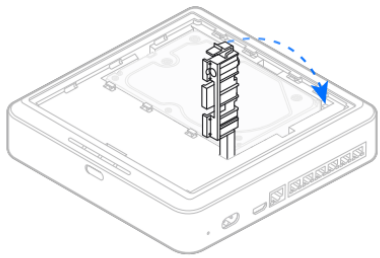

5

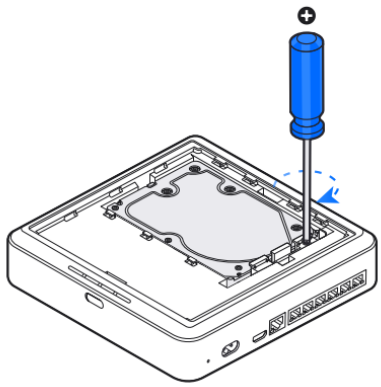

6

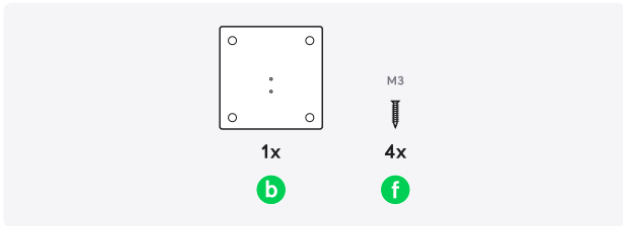

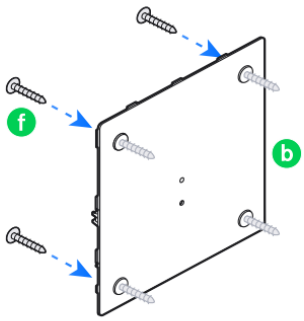

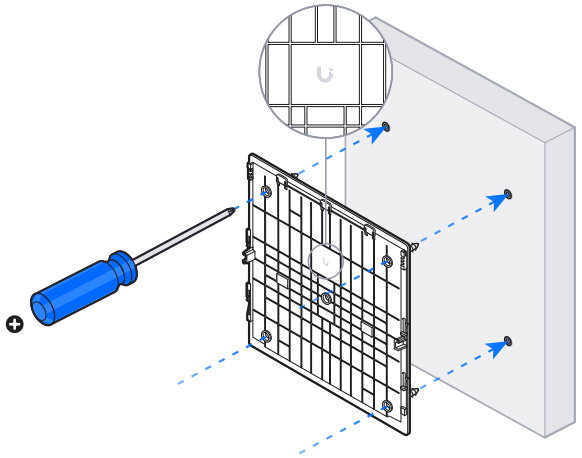

7

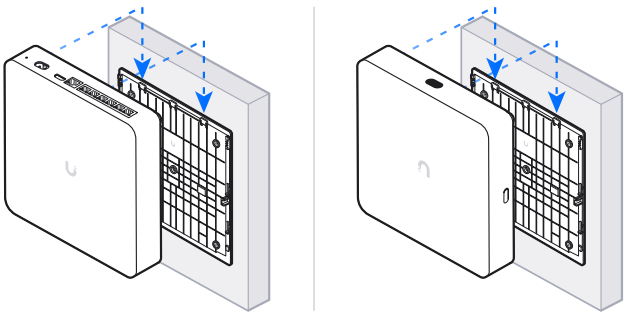

8

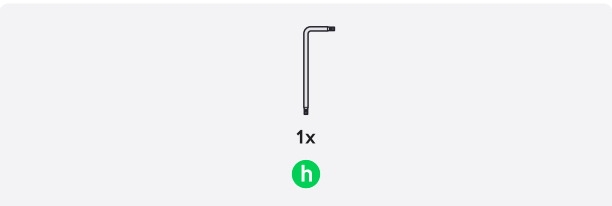

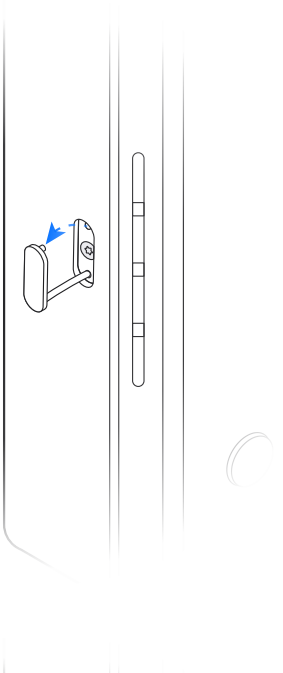

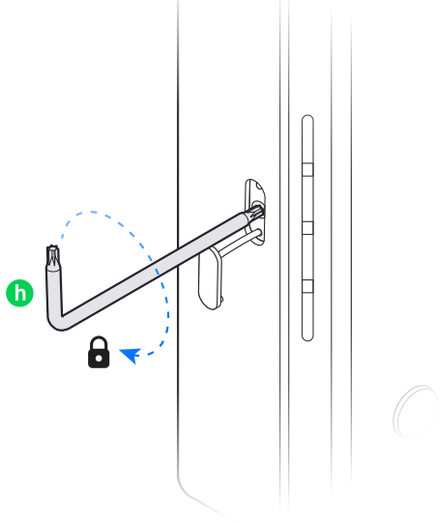

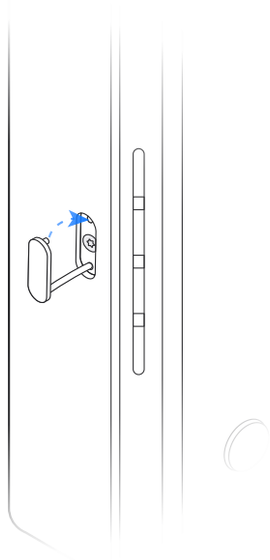

9

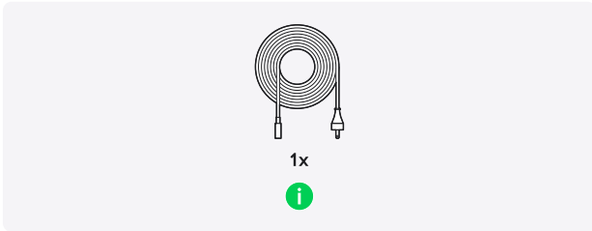

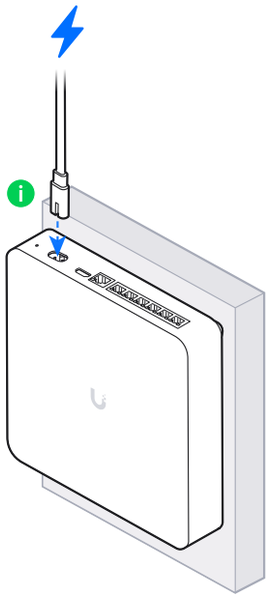

10

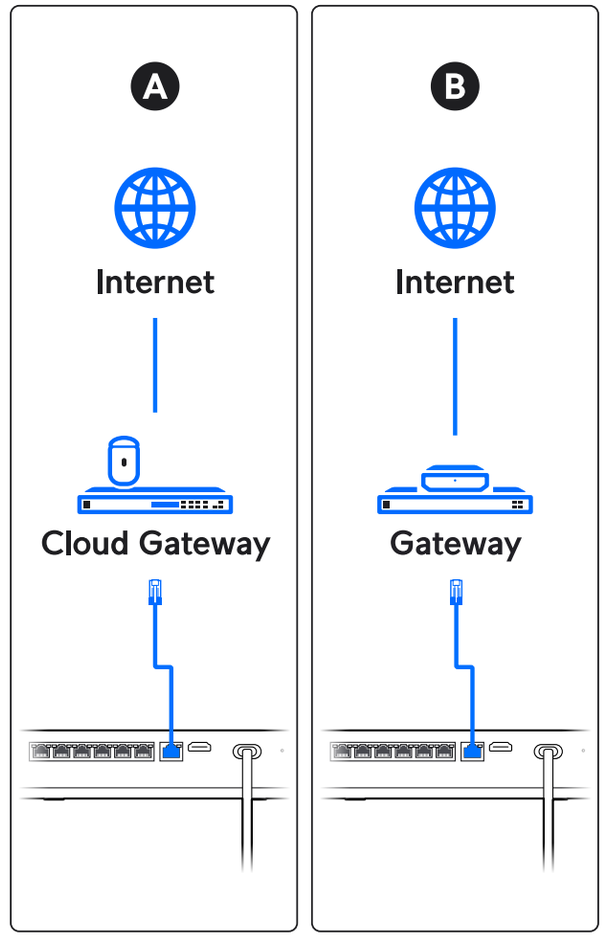
A
Internet
Cloud Gateway
B
Internet
Gateway

11

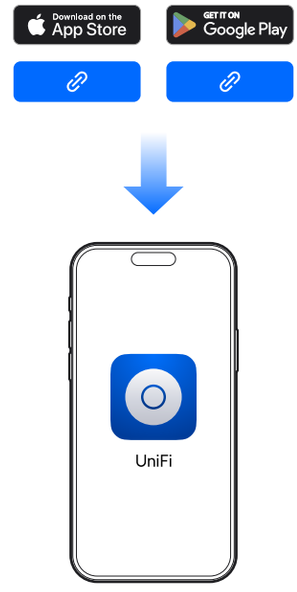
Download on the App Store
GET IT ON Google Play
UniFi

12

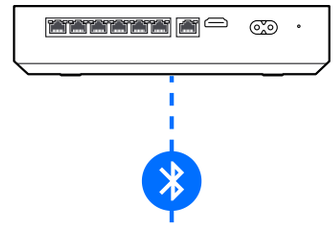

1

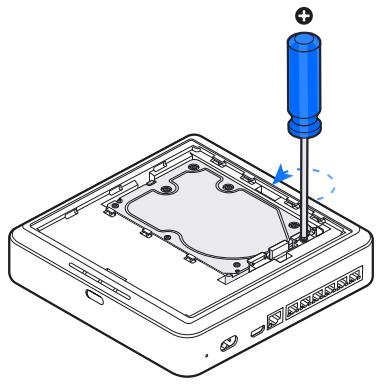

2

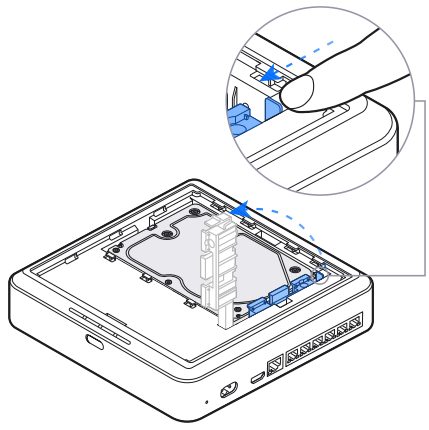

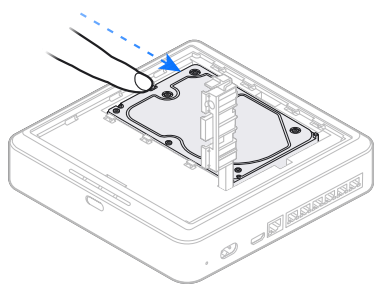

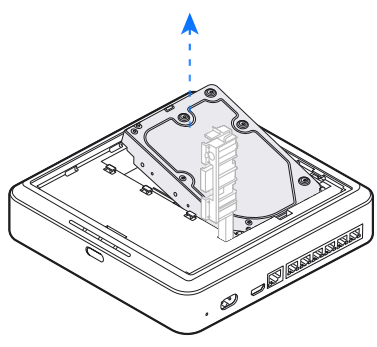

If you need further assistance, visit our Help Center or contact Ubiquiti Support.

©2025 Ubiquiti Inc. All rights reserved. Ubiquiti, the Ubiquiti U logo, and UniFi are trademarks or registered trademarks of Ubiquiti Inc. in the United States and in other countries. Apple and the Apple logo are trademarks of Apple Inc., registered in the US, and other countries. App Store is a service mark of Apple Inc., registered in the US, and other countries. Android, Google, Google Play, and the Google Play logo are trademarks of Google LLC.