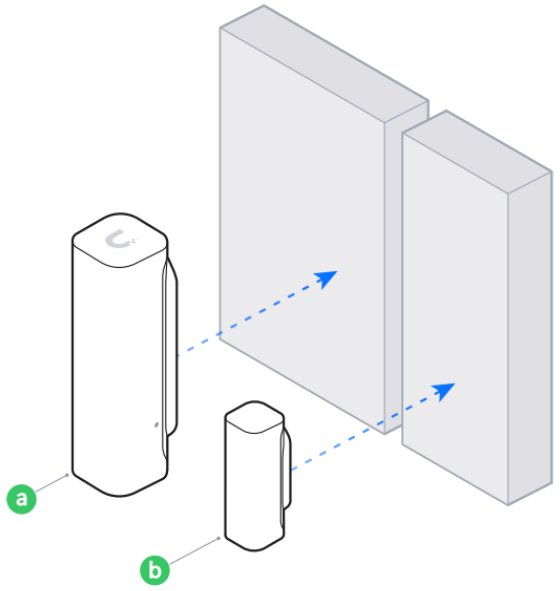

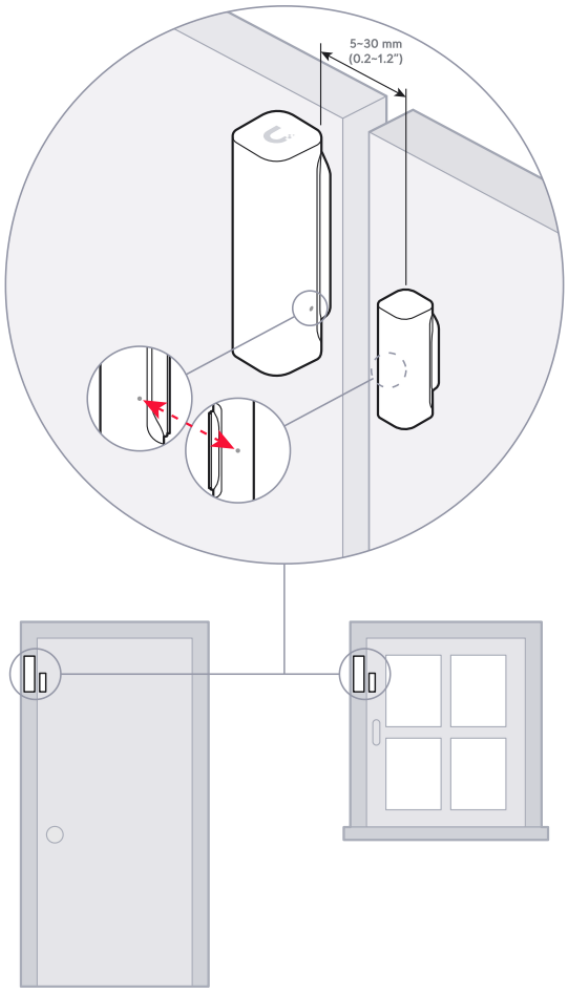

1

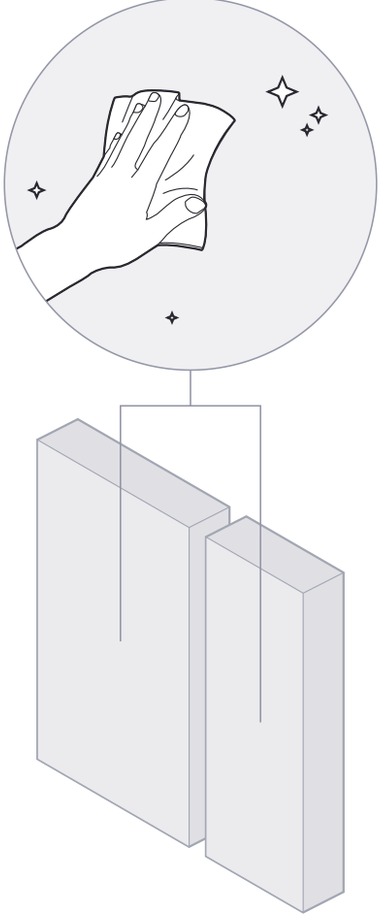

2

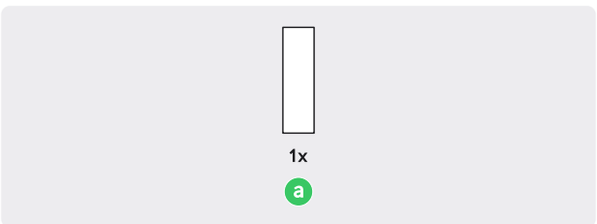

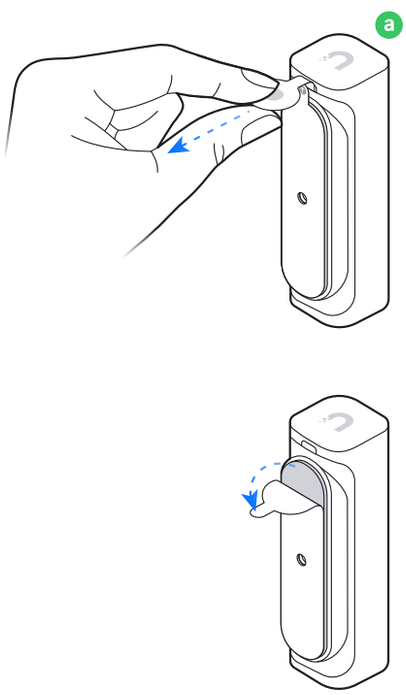

3

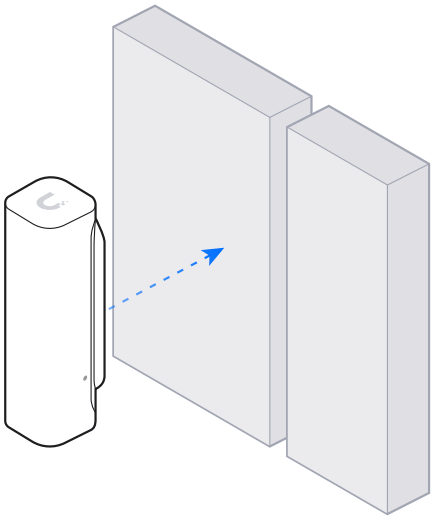

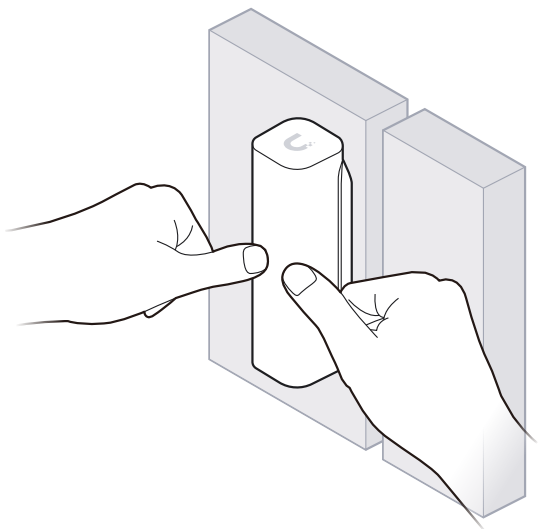

4

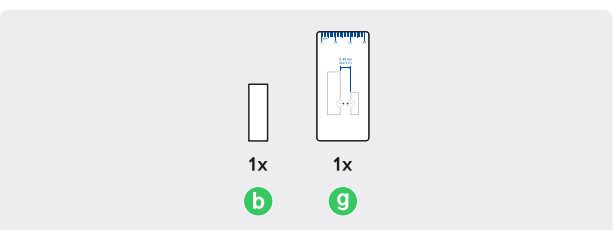

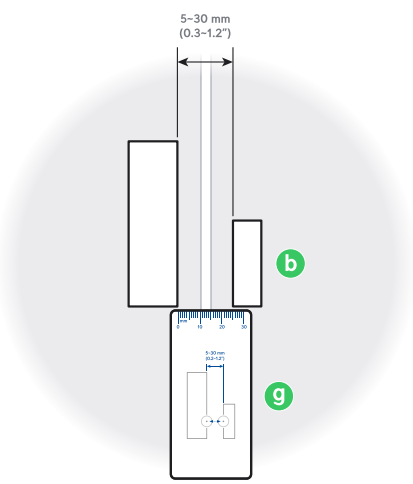

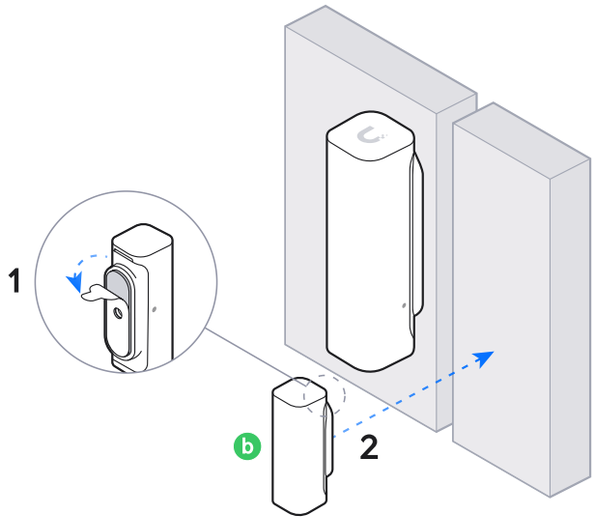

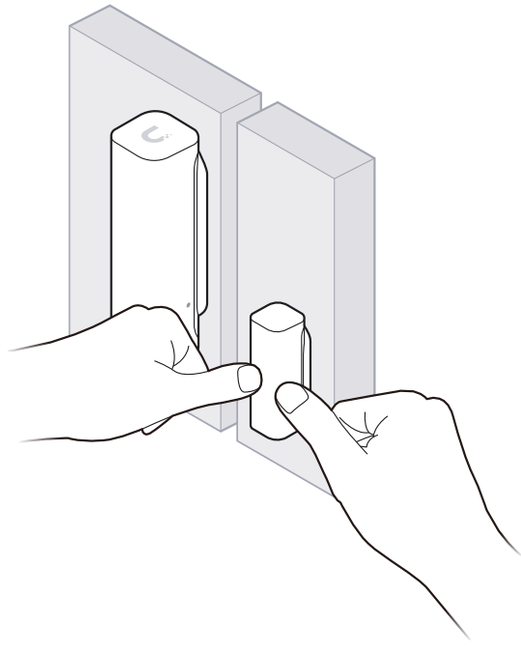

5

6

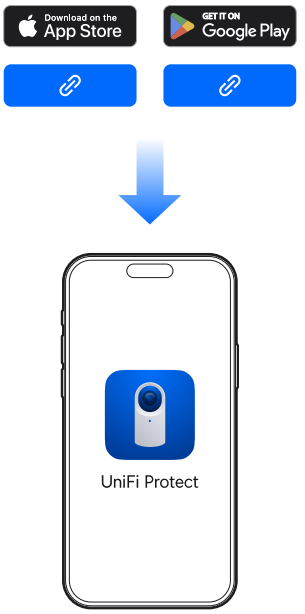

CR123A Battery

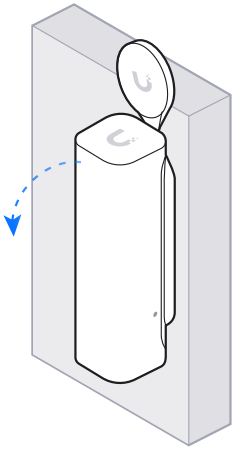

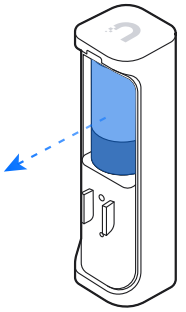

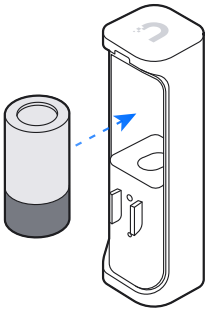

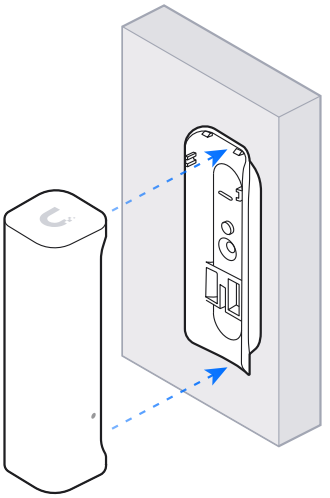

If you need further assistance, visit our Help Center or contact Ubiquiti Support.

©2025 Ubiquiti Inc. All rights reserved. Ubiquiti, the Ubiquiti U logo, UniFi, UniFi Protect and SuperLink are trademarks or registered trademarks of Ubiquiti Inc. in the United States and other countries and regions. Apple and the Apple logo are trademarks of Apple Inc., registered in the U.S. and other countries and regions. App Store is a service mark of Apple Inc., registered in the U.S. and other countries and regions. Android, Google, Google Play, the Google Play logo are trademarks of Google LLC.