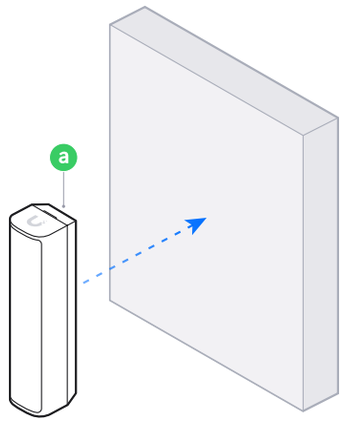

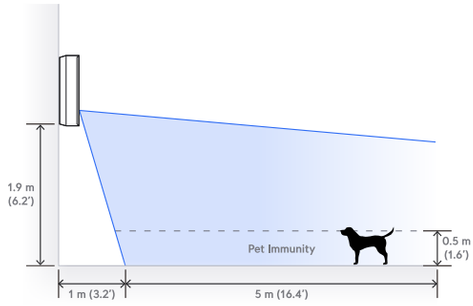

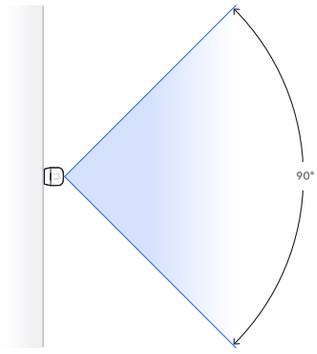

1

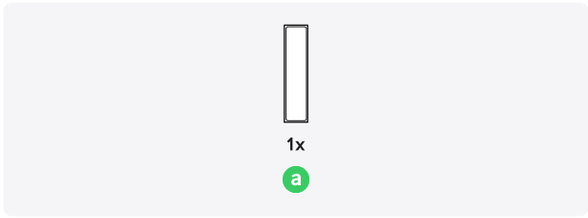

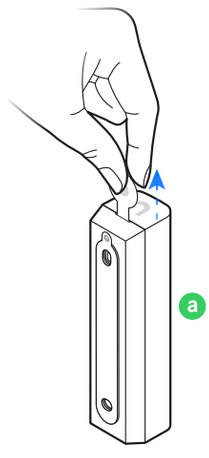

2

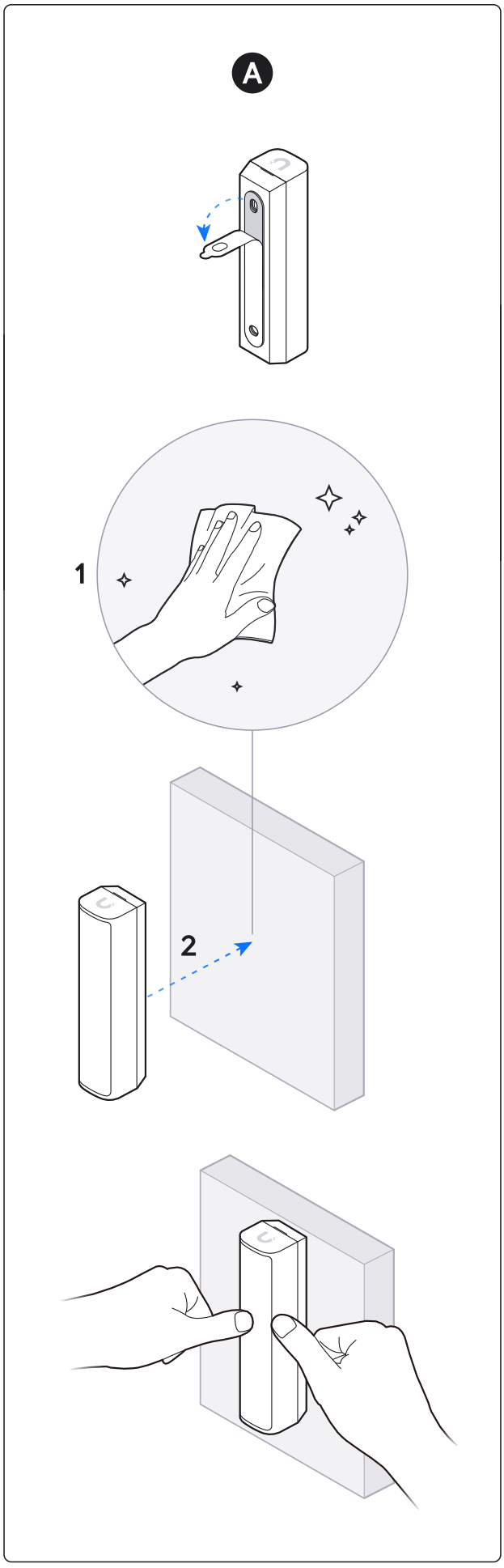

B

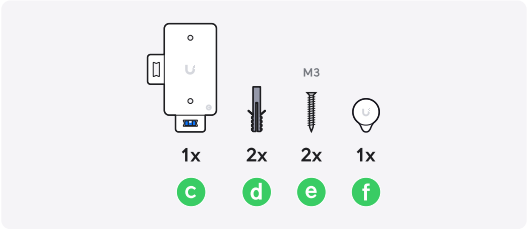

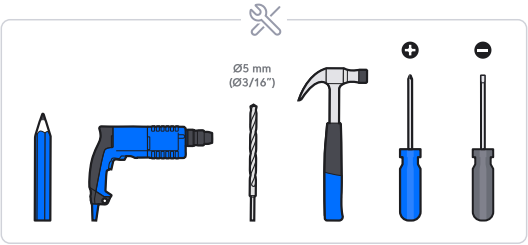

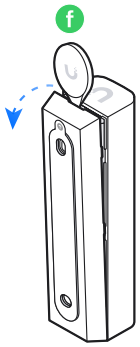

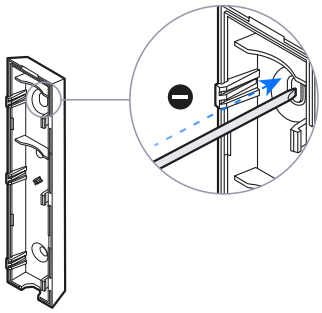

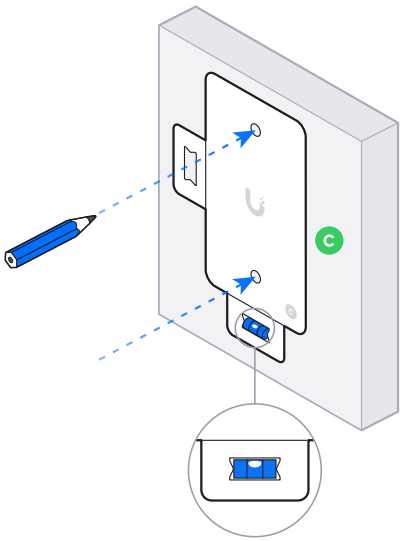

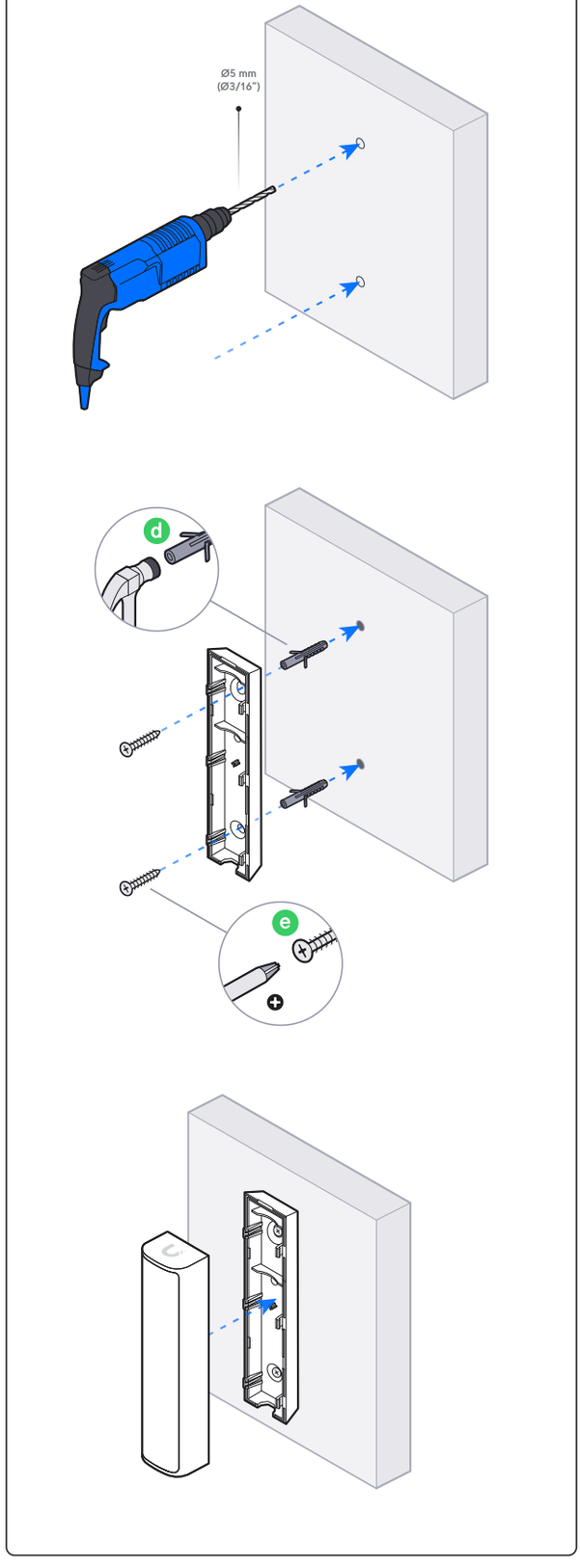

3

UniFi Switching
SuperLink
Gateway

4

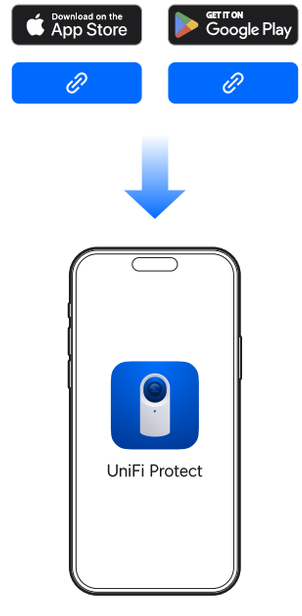
Download on the
App Store
GET IT ON
Google Play
UniFi Protect

CR123A Battery

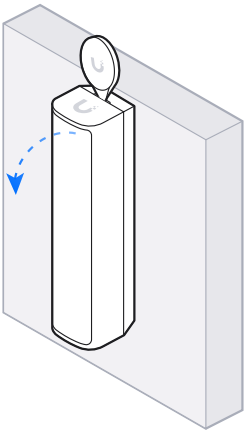

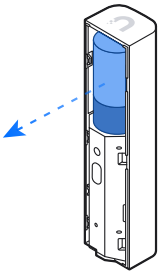

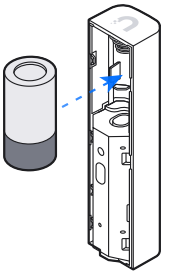

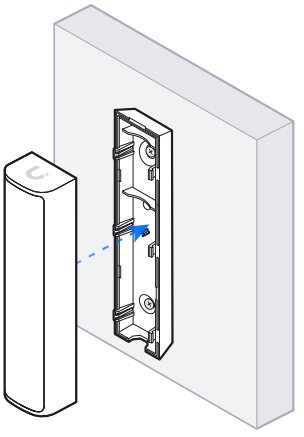

If you need further assistance, visit our Help Center or contact Ubiquiti Support.

©2025 Ubiquiti Inc. All rights reserved. Ubiquiti, the Ubiquiti U logo, UniFi, Protect and UniFi are trademarks or registered trademarks of Ubiquiti Inc. in the United States and in other countries. Apple and the Apple logo are trademarks of Apple Inc., registered in the U.S. and other countries. App Store is a service mark of Apple Inc., registered in the U.S. and other countries. Android, Google, Google Play, the Google Play logo are trademarks of Google LLC.