Bass Trap Wall Tech

The Bass Trap Wall represents a significant upgrade in low-frequency acoustic control, designed to deliver high-performance absorption precisely where it's needed most. Constructed with dual independent cavities and featuring two finely tuned diaphragmatic membranes, the Bass Trap Wall effectively addresses low-end frequencies that are often difficult to manage.
A key component of its performance is the dual-membrane surface optimisation. The specialised polymer membrane works together with an internal absorber to achieve optimised performance. By targeting absorption specifically from 80Hz to 120Hz, it delivers exceptional results within the second and third octaves.

Features

Pistonic Diaphragmatic Absorber
Absorption Range: 80 Hz to 120 Hz
Peak Absorption Frequency: 90 Hz

Purpose

- First reflection control
- RT reduction
- Extended mid-low frequency absorption
- Reducing excessive reverberation

Recommended for

- Home Theater

Performance

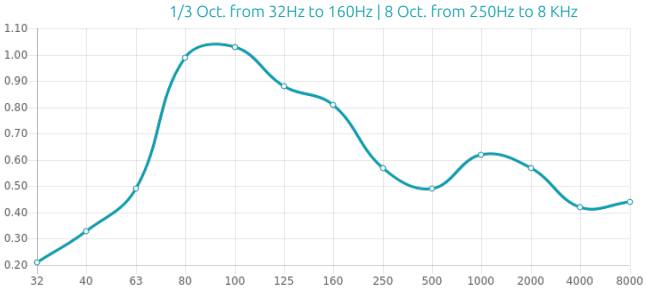

Pistonic Diaphragmatic Absorber
Absorption Range: 80 Hz to 120 Hz
Peak Absorption Frequency: 90 Hz

———

This product is available in the following Fire Rate:
FG | Furniture Grade

PRODUCT COMPOSITION:

Bass Trap Wall Tech
- Marine grade plywood structural frame
- Calibrated cell acoustic foam

———

Dimensions:
Bass Trap Wall Tech | 591x591x51mm

Dimensions

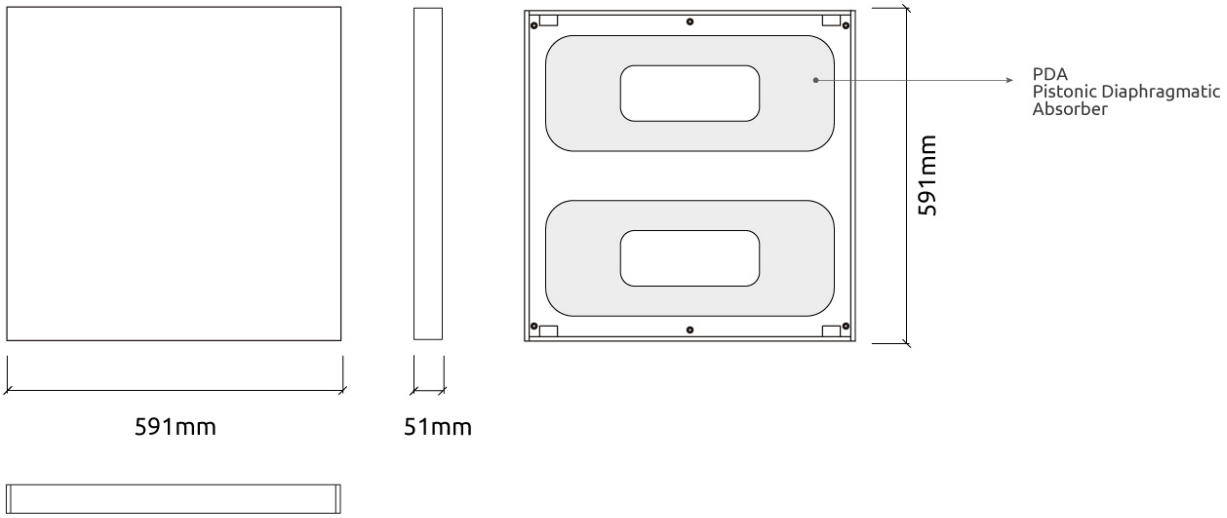

Fixing Systems

Integrated Fixing Systems

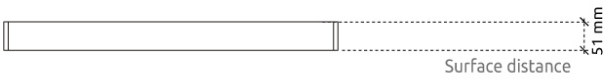

Dimensions

FG - PP | 591x591x51mm

Weight

5.22 Kg

Box

Quantity per box: 2

Dimensions: 645x220x655mm

Volume: 0.093m3

Weight: 11.66Kg

Finishes

Bass Trap Wall Tech

(FG - PP) Painted Primer Finishes



FG | (W07) Black

Retail code:
201243530010004