LENS PN	DESCRIPTION	DIMENSION 'A'	DIMENSION 'B'	DIMENSION 'C'	DIMENSION 'D'	DIMENSION 'E'	DIMENSION 'F'
140-115108-XX	Optional Lens (TR: 1.02~1.36)	1.0 (0.1")	60.0 (2.4")	674.0 (26.5")	340 (13.4")	298 (11.7")	80 (3.1")
140-109101-XX	Optional Lens (TR: 1.20~1.50)	51.0 (2.0")	111.0 (4.4")	725.0 (28.6")	339 (13.3")	298 (11.7")	80 (3.1")
140-110103-XX	Standard Lens (TR: 1.50~2.00)	36.0 (1.4")	96.0 (3.8")	710.0 (27.9")	339 (13.3")	298 (11.7")	80 (3.1")
140-111104-XX	Optional Lens (TR: 2.0~4.00)	71.0 (2.8")	131.0 (5.2")	745.0 (29.3")	330 (13.0")	298 (11.7")	80 (3.1")
140-116109-XX	Optional Lens (TR: 4.00~7.20)	95.0 (3.7")	155.0 (6.1")	769.0 (30.3")	333 (14.4")	298 (11.7")	80 (3.1")
140-142108-XX	LENS HS SERIES UST (TR: 0.38~1.0)	337.0 (13.3")	329.0 (13.0")	943.0 (37.1")	320 (12.6")	301 (11.9")	80 (3.1")
140-144100-XX	Optional Lens (TR: 0.65~0.75)	73.0 (2.9")	133.0 (5.2")	750.0 (30.0")	352 (14.0")	298 (11.7")	80 (3.1")
140-145101-XX	Optional Lens (TR: 7.2~10.8)	167.0 (6.6")	227.0 (8.9")	844.0 (33.2")	332 (13.0")	298 (11.7")	80 (3.1")

REVISION HISTORY OF: 020-002065-01			
REV	DESCRIPTION OF CHANGE	BY	REV DATE
01	INITIAL RELEASE	Jerry	2023/2/22

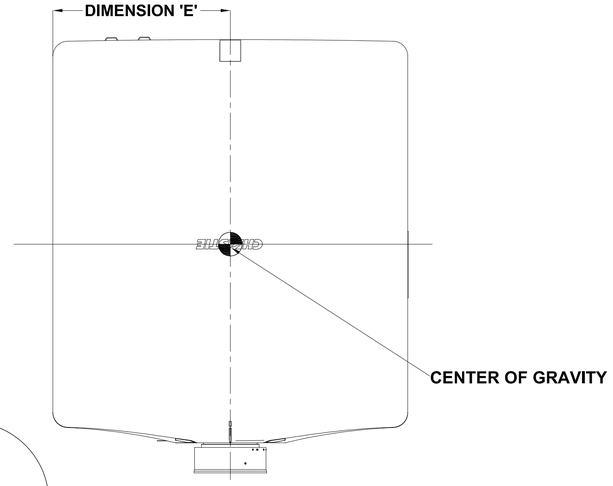

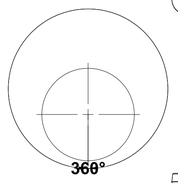

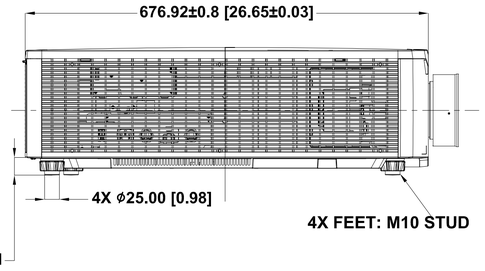

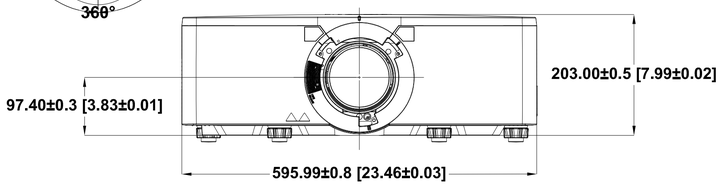

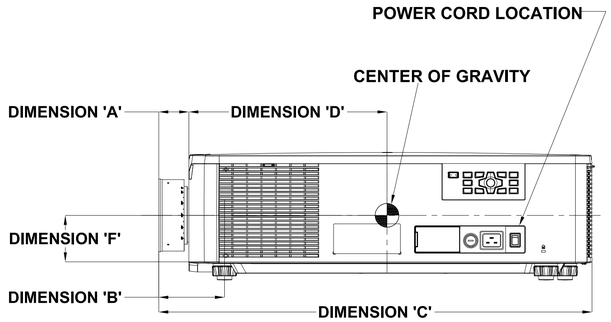

Pitch 360 Degrees

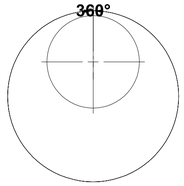

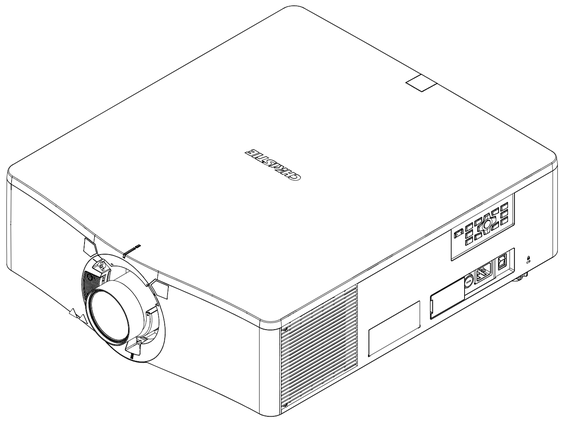

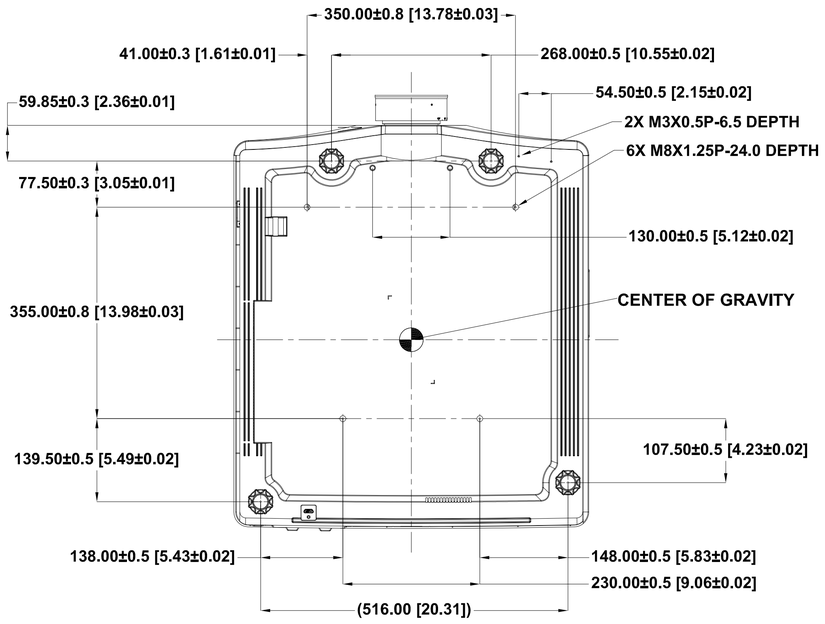

GENERAL NOTES:

MASS: 43.5 kg (95.9 lbs) NO LENS

OPERATING TEMPERATURE RANGE:
0°C - 40°C (41°F - 104°F) @ 0~2500 FT
0°C - 35°C (41°F - 95°F) @ 2500~5000 FT
0°C - 30°C (41°F - 86°F) @ 5000~10000 FT

POWER REQUIREMENTS:

4K22-HS:
- INPUT: 100-120V, 50/60Hz, 13.5A
  220-240V, 50/60Hz , 8.5A
- POWER CONSUMPTION: 1553W (MAX.)
- SINGLE PHASE 100~240V 20 AMP BREAKER

4K13-HS:
- INPUT: 100-120V, 50/60Hz, 11A
  220-240V, 50/60Hz , 5A
- POWER CONSUMPTION: 1030W (MAX.)
- SINGLE PHASE 100~240V 15 AMP BREAKER

[INPUT / OUTPUT PANEL]

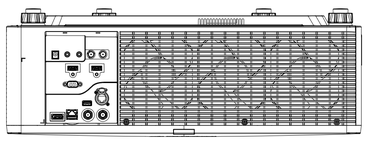

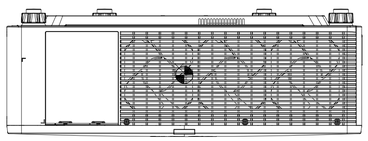

DESCRIPTION	DIMENSION 'D'	DIMENSION 'E'	DIMENSION 'F'
NO LENS	365 (14.4")	298 (11.7")	77 (3.0")

UNITS INCHES / MILLIMETRES
UNLESS OTHERWISE SPECIFIED
INTERPRET DIMENSIONS AND TOLERANCES PER ASME Y14.5M-1994
TOLERANCES APPLY AS SHOWN BELOW

DECIMAL PLACES	INCHES	MILLIMETRES
.XXX	±.063	±1.6
.XX	±.125	±3.1
.X	±.250	±6.3

ANGULAR DIMENSIONS: XX° ±1/2°; XX.X° ±0.5°

DRAWN BY: Jerry Chou
DRAWN DATE: 2023/2/22
APPROVED BY: Gary Tseng
APPROVAL DATE: 2023/2/22

PROPRIETARY
NOT TO BE DISCLOSED OR REPRODUCED IN ANY MANNER WITHOUT THE EXPRESS WRITTEN PERMISSION OF CHRISTIE

THIRD ANGLE PROJECTION

CHRISTIE DIGITAL SYSTEMS USA, INC.
CHRISTIE DIGITAL SYSTEMS CANADA, INC.

PART DESCRIPTION: DWG Line 4K22-4K13-HS

SIZE: E | PART NUMBER: 020-002065-01 | REVISION: 01
SCALE: 2:7 | MASS: - LBS [- KG] | SHEET 1 OF 9

NOTES:
1. PROJECTOE WITH FOG ASSY

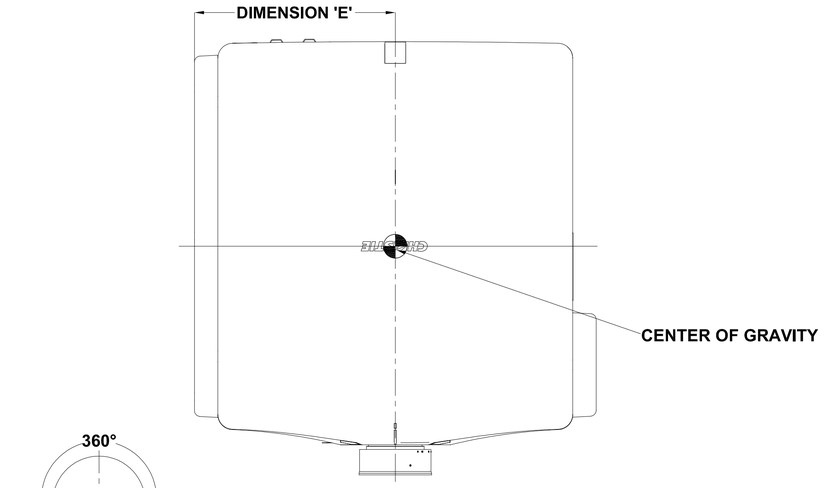

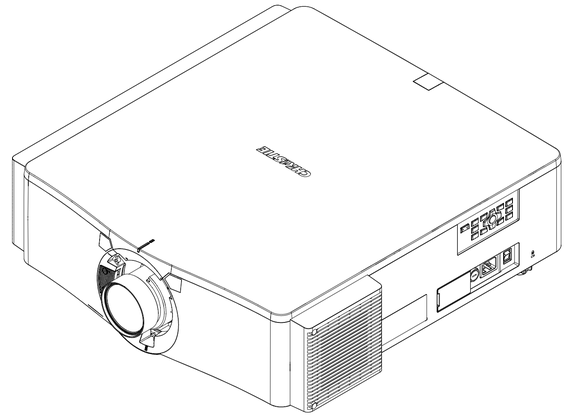

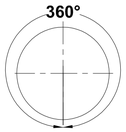

Roll 360 Degrees

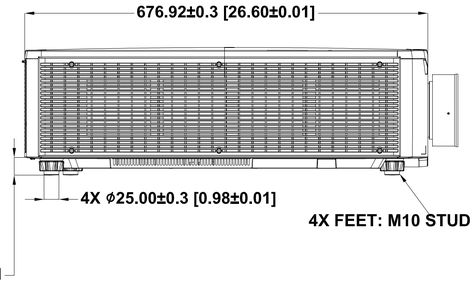

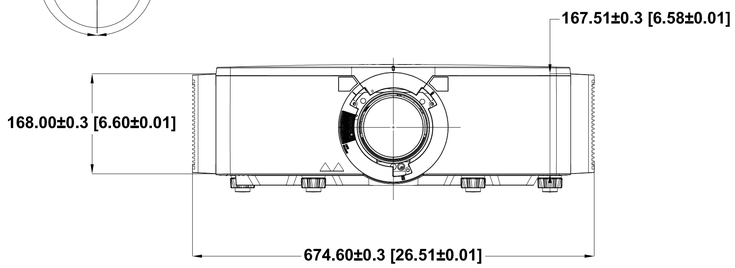

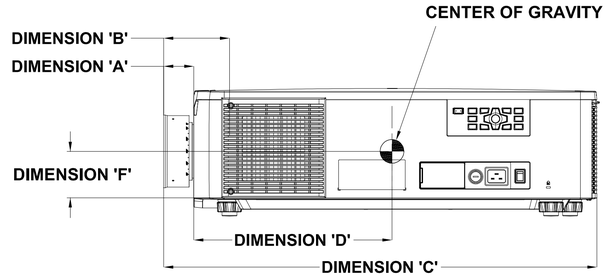

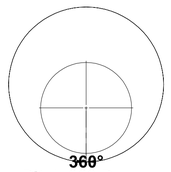

Pitch 360 Degrees

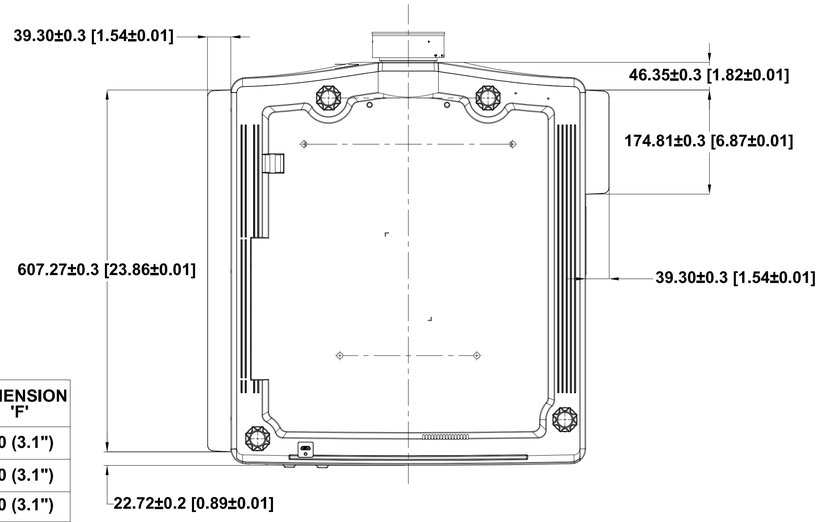

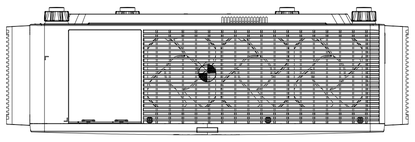

LENS PN	DESCRIPTION	DIMENSION 'A'	DIMENSION 'B'	DIMENSION 'C'	DIMENSION 'D'	DIMENSION 'E'	DIMENSION 'F'
140-115108-XX	Optional Lens (TR: 1.02~1.36)	1.0 (0.1")	60.0 (2.4")	674.0 (26.5")	345 (13.6")	337 (13.3")	80 (3.1")
140-109101-XX	Optional Lens (TR: 1.20~1.50)	51.0 (2.0")	111.0 (4.4")	725.0 (28.6")	344 (13.5")	337 (13.3")	80 (3.1")
140-110103-XX	Standard Lens (TR: 1.50~2.00)	36.0 (1.4")	96.0 (3.8")	710.0 (27.9")	345 (13.6")	337 (13.3")	80 (3.1")
140-111104-XX	Optional Lens (TR: 2.00~4.00)	71.0 (2.8")	131.0 (5.2")	745.0 (29.3")	335 (13.2")	337 (13.3")	80 (3.1")
140-116109-XX	Optional Lens (TR: 4.00~7.20)	95.0 (3.7")	155.0 (6.1")	769.0 (30.3")	339 (13.3")	337 (13.3")	80 (3.1")
140-142108-XX	LENS HS SERIES UST (TR: 0.38~1.0)	337.0 (133")	329.0 (13.0")	943.0 (37.1")	320 (12.6")	301 (11.9")	80 (3.1")
140-144100-XX	Optional Lens (TR: 0.65~0.75)	73.0 (2.9")	133.0 (5.2")	750.0 (30.0")	352 (14.0")	337 (13.3")	80 (3.1")
140-145101-XX	Optional Lens (TR: 7.2~10.8)	167.0 (6.6")	227.0 (8.9")	844.0 (33.2")	332 (13.0")	337 (13.3")	80 (3.1")

DESCRIPTION	DIMENSION 'D'	DIMENSION 'E'	DIMENSION 'F'
NO LENS	371 (14.4")	337 (13.3")	77 (3.0")

PROPRIETARY
NOT TO BE DISCLOSED OR REPRODUCED IN ANY MANNER WITHOUT THE EXPRESS WRITTEN PERMISSION OF CHRISTIE

CHRISTIE
CHRISTIE DIGITAL SYSTEMS USA, INC.
CHRISTIE DIGITAL SYSTEMS CANADA, INC

SIZE	PART NUMBER	REVISION
E	020-002065-01	01
SCALE 2:7	MASS - LBS [-KG]	SHEET 2 OF 9

NOTES:
1. PROJECTOR WITH FOG ASSY INSTALLED

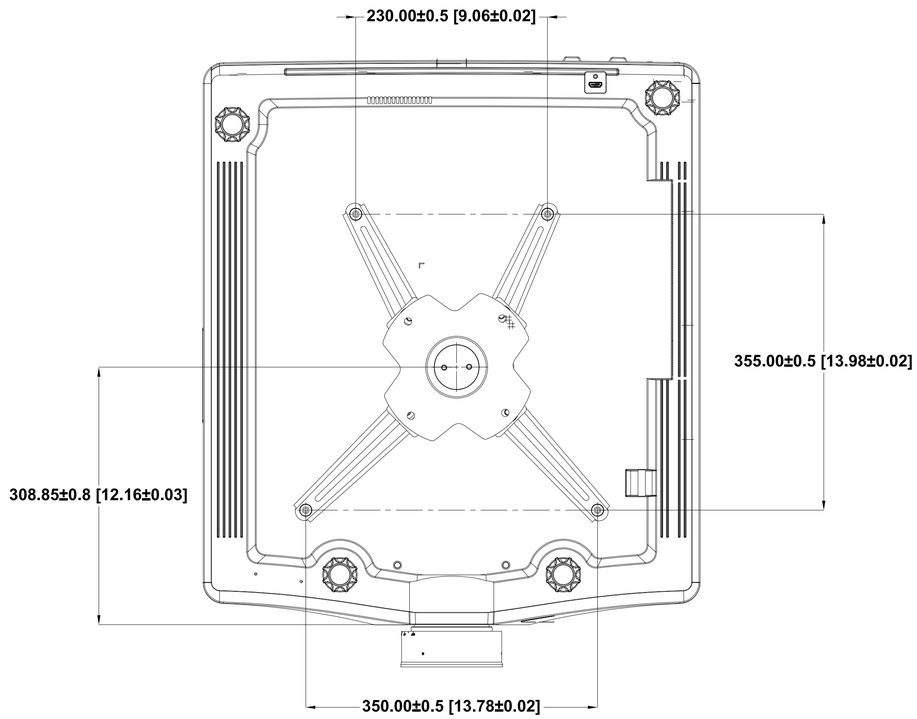

Specification	
Weight Capacity	45 kg (99 lbs)
Maximum Dimension	192 x 192 x 180 mm (7.6 x 7.6 x 7.1 inch)
Tilt Angle	±45°
Swivel	360°
Mass	4.9 kg (10.8 lbs)

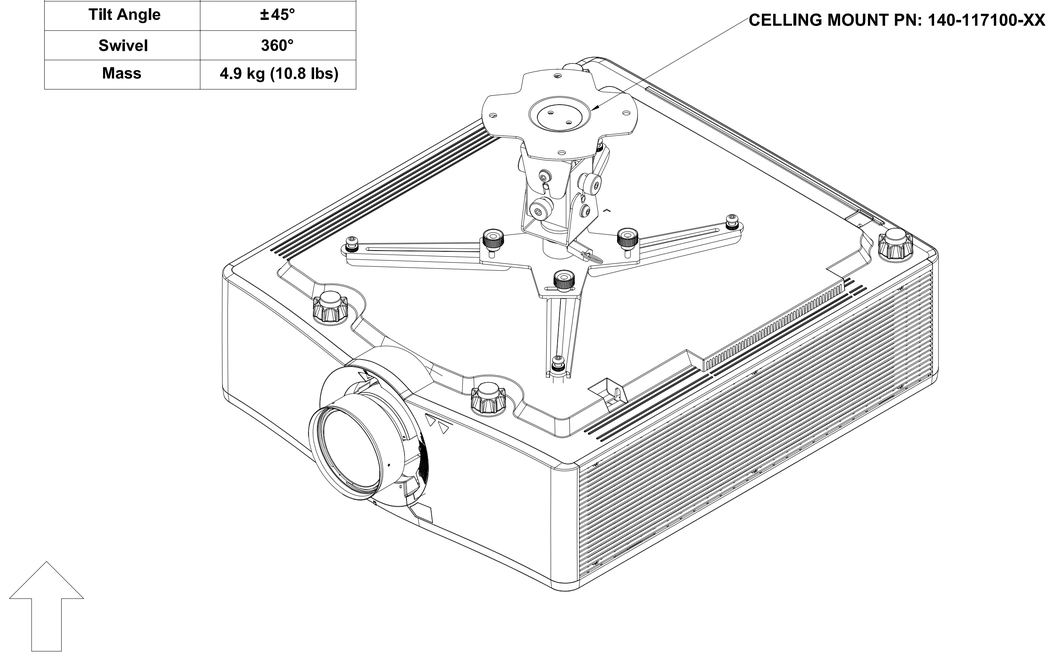

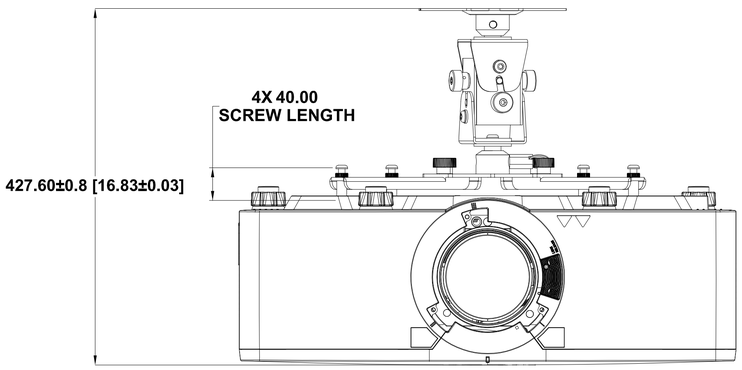

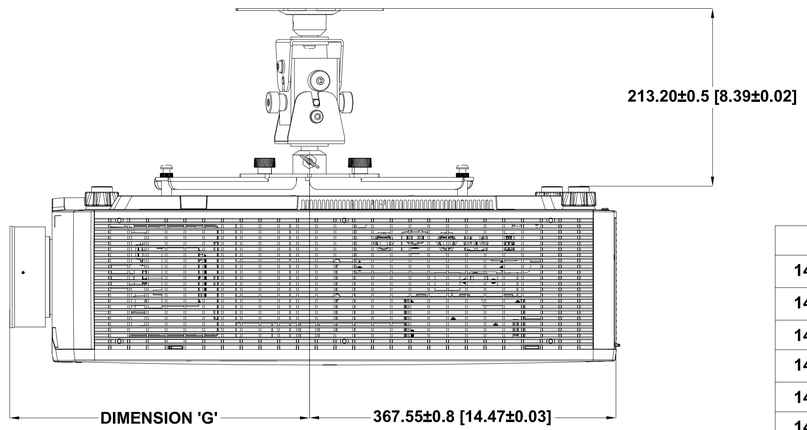

LENS PN	DESCRIPTION	DIMENSION 'G'
140-114107-XX	Optional Lens (TR: 0.84~1.02)	345 (13.59")
140-115108-XX	Optional Lens (TR: 1.02~1.36)	298 (11.75")
140-109101-XX	Optional Lens (TR: 1.20~1.50)	349 (13.73")
140-110103-XX	Standard Lens (TR: 1.50~2.00)	330 (12.98")
140-111104-XX	Optional Lens (TR: 2.00~4.00)	372 (16.64")
140-116109-XX	Optional Lens (TR: 4.00~7.20)	395 (15.53")
140-142108-XX	LENS HS SERIES UST (TR: 0.38~1.0)	567 (22.32")
140-144100-XX	Optional Lens (TR: 0.65~0.75)	382 (15.0")
140-145101-XX	Optional Lens (TR: 7.2~10.8)	476 (18.7")

PROPRIETARY
NOT TO BE DISCLOSED OR REPRODUCED IN ANY MANNER WITHOUT THE EXPRESS WRITTEN PERMISSION OF CHRISTIE

CHRISTIE
CHRISTIE DIGITAL SYSTEMS USA, INC
CHRISTIE DIGITAL SYSTEMS CANADA, INC

SIZE	PART NUMBER	REVISION
E	020-002065-01	01
SCALE 2:5	MASS - LBS [- KG]	SHEET 3 OF 9

Specification	
Weight Capacity	45 kg (99 lbs)
Maximum Dimension	790 x 790 x 463 mm (31.1 x 31.1 x 18.2 inch)
Roll	±3°
Pitch	±3°
Yaw	±3°
Mass	40.37 kg (89 lbs)

PROJECTOR WITH FOG INSTALLED

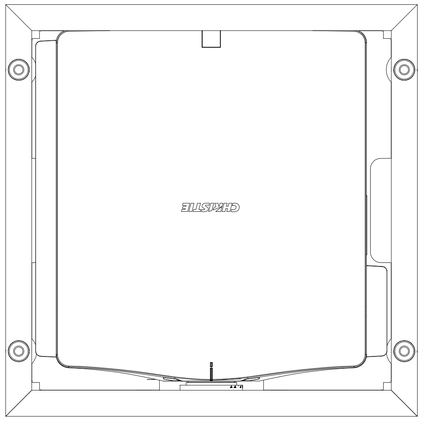

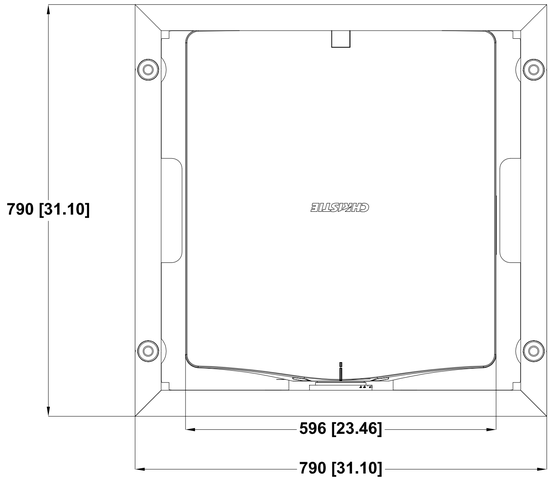

RIGGING FRAME PN: 140-113106-XX

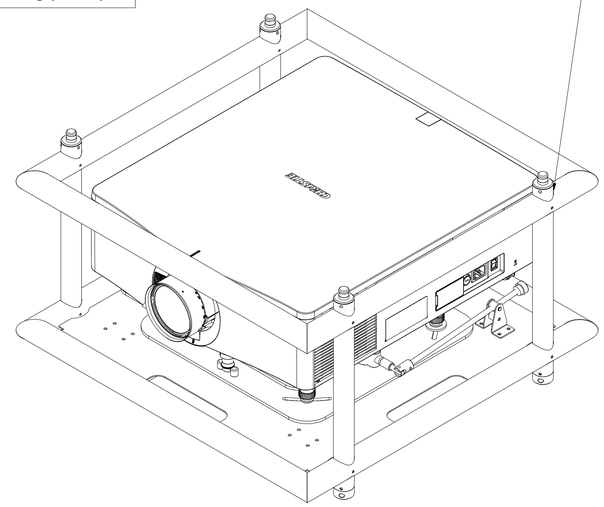

PROJECTOR WITH FOG INSTALLED

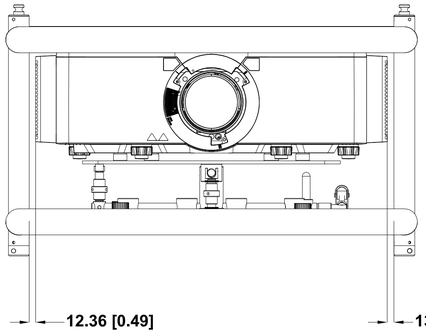

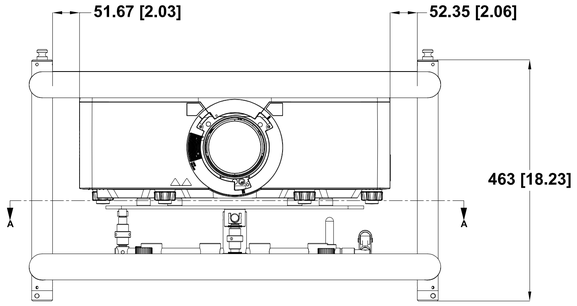

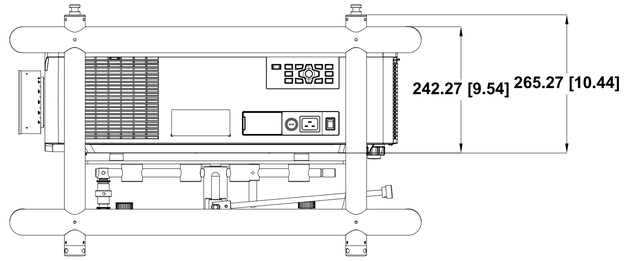

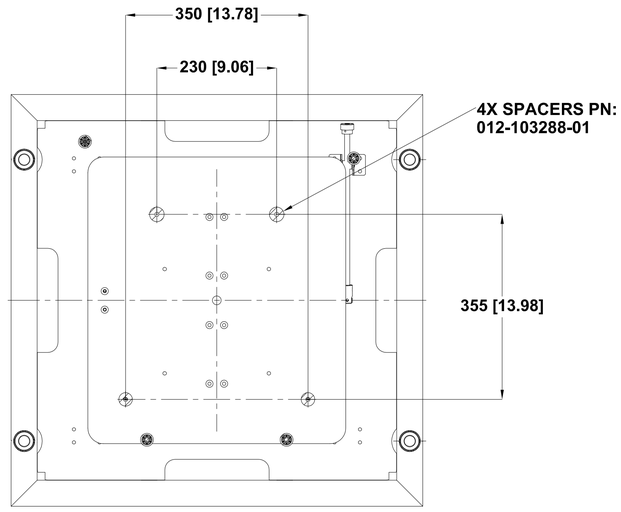

SECTION A-A

Up to three projectors can be stacked in landscape orientation.
A single projector can be positioned in portrait mode - DO NOT STACK.

PROPRIETARY
NOT TO BE DISCLOSED OR REPRODUCED IN ANY MANNER WITHOUT THE EXPRESS WRITTEN PERMISSION OF CHRISTIE

CHRISTIE
CHRISTIE DIGITAL SYSTEMS USA, INC.
CHRISTIE DIGITAL SYSTEMS CANADA, INC

SIZE	PART NUMBER	REVISION
E	020-002065-01	01

SCALE	MASS	
1:4	- LBS [- KG]	SHEET 4 OF 9

AIR INLET:

4K13-HS: 250 mm (10.0")
4K22-HS: 500 mm (20.0")
MINIMUM SIDE CLEARANCE

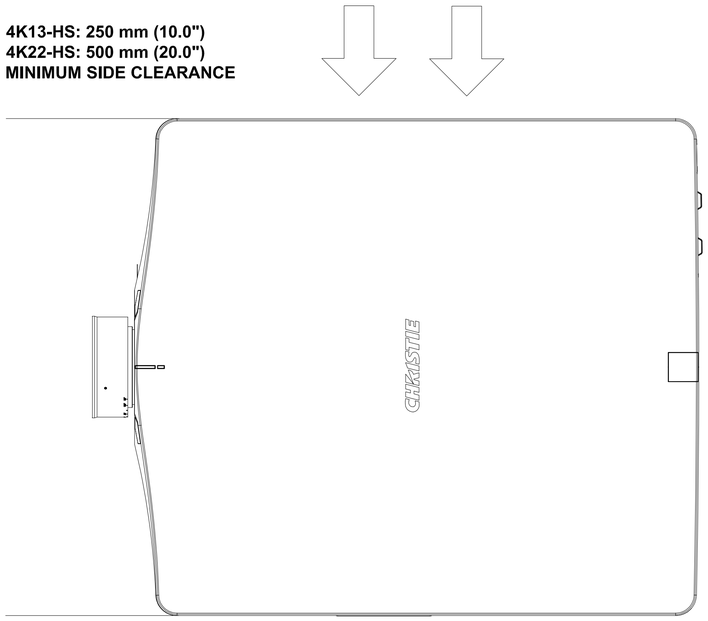

AIR OUTLET:

500MM (20.0")
MINIMUM REAR CLEARANCE

OUTLET AIRFLOW:

243 CFM (APPROX)
FOR PROJECTOR ONLY

177 CFM (APPROX)
FOR PROJECTOR WITH FOG
ASSY INSTALLED

AIR INLET:

4K13-HS: 250 mm (10.0")
4K22-HS: 500 mm (20.0")
MINIMUM SIDE CLEARANCE

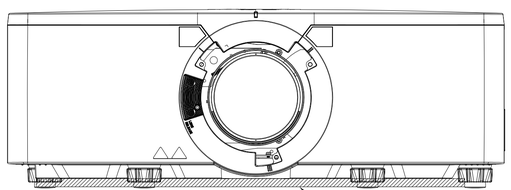

10MM OR GREATER GAP REQUIRED
FOR AIRFLOW

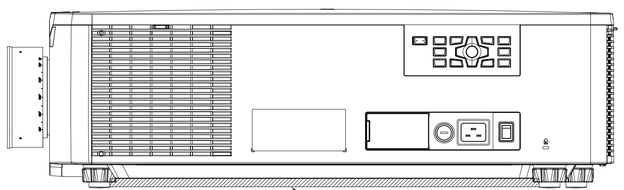

10MM OR GREATER GAP REQUIRED
FOR AIRFLOW

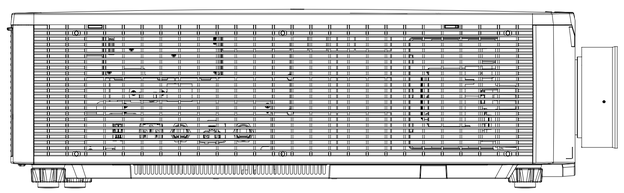

PROPRIETARY
NOT TO BE DISCLOSED OR REPRODUCED IN ANY MANNER WITHOUT THE EXPRESS WRITTEN PERMISSION OF CHRISTIE.

CHRISTIE
CHRISTIE DIGITAL SYSTEMS USA, INC.
CHRISTIE DIGITAL SYSTEMS CANADA, INC.

SIZE	PART NUMBER	REVISION
E	020-002065-01	01

SCALE	MASS	SHEET 5 OF 9
2:5	- LBS [- KG]	

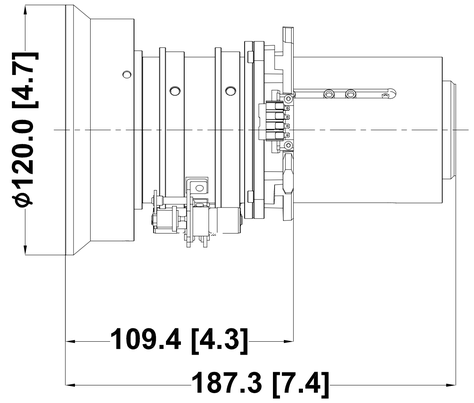

140-115108-XX

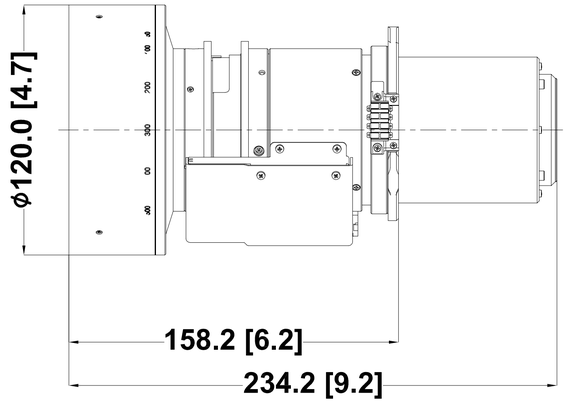

140-109101-XX

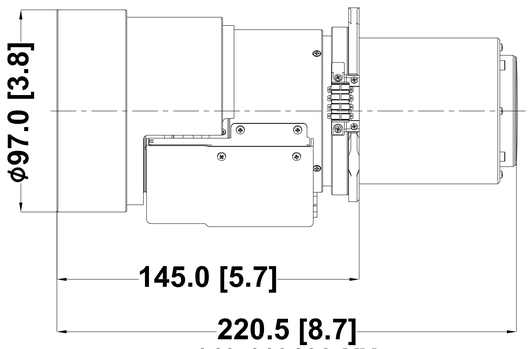

140-110103-XX

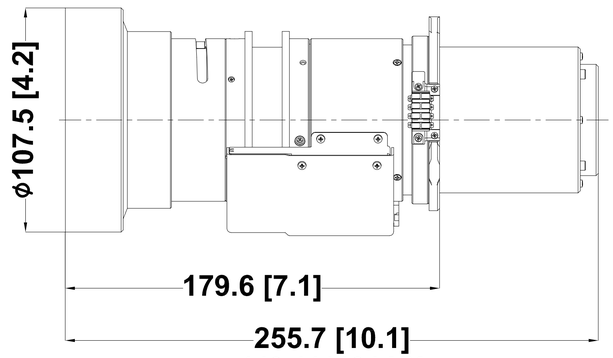

140-111104-XX

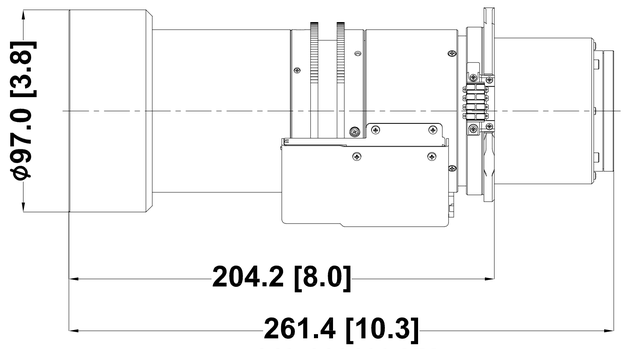

140-116109-XX

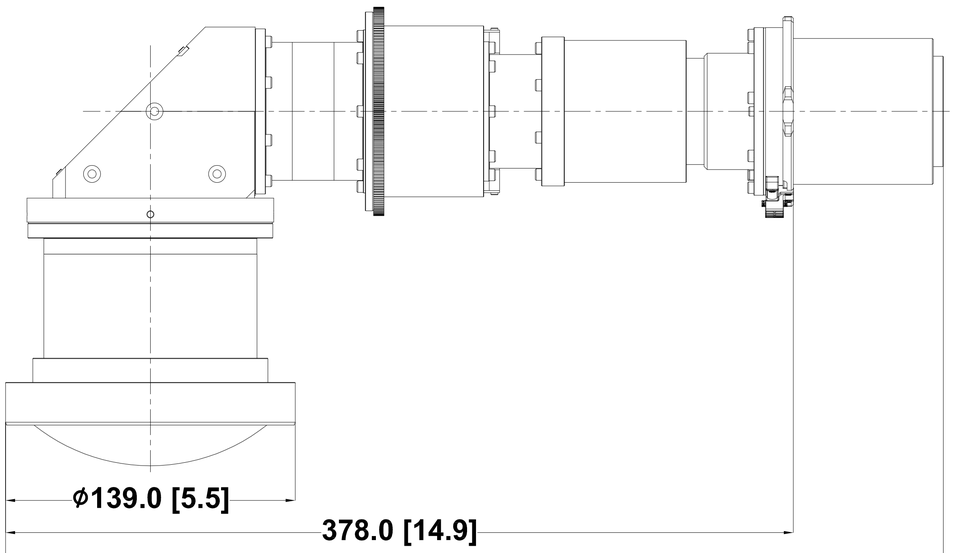

140-142108-XX

LENS TYPE	DESCRIPTION	NET WEIGHT	GROSS WEIGHT
140-115108-XX	Optional Lens (1.02-1.36)	1.8 KG	2.17 KG
140-109101-XX	Optional Lens (1.20-1.50)	2.4 KG	2.77 KG
140-110103-XX	Standard Lens (1.50-2.00)	2.0 KG	2.39 KG
140-111104-XX	Optional Lens (2.00-4.00)	2.5 KG	2.87 KG
140-116109-XX	Optional Lens (4.00-7.20)	2.4 KG	2.77 KG
140-142108-XX	LENS HS SERIES UST (0.38-1.0)	6.4 KG	9.30 KG

PROPRIETARY
NOT TO BE DISCLOSED OR REPRODUCED IN ANY MANNER WITHOUT THE EXPRESS WRITTEN PERMISSION OF CHRISTIE

CHRISTIE
CHRISTIE DIGITAL SYSTEMS USA, INC.
CHRISTIE DIGITAL SYSTEMS CANADA, INC

SIZE	PART NUMBER	REVISION
E	020-002065-01	01

SCALE	MASS	
1:1	- LBS [- KG]	SHEET 6 OF 9

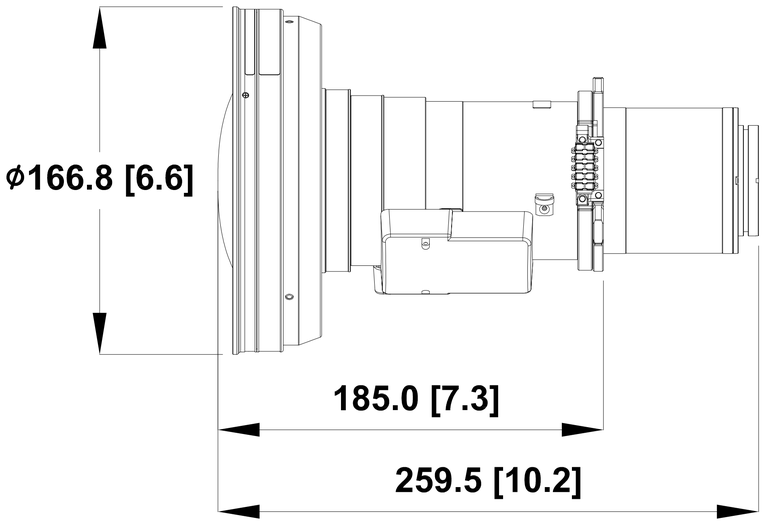

140-144100-01

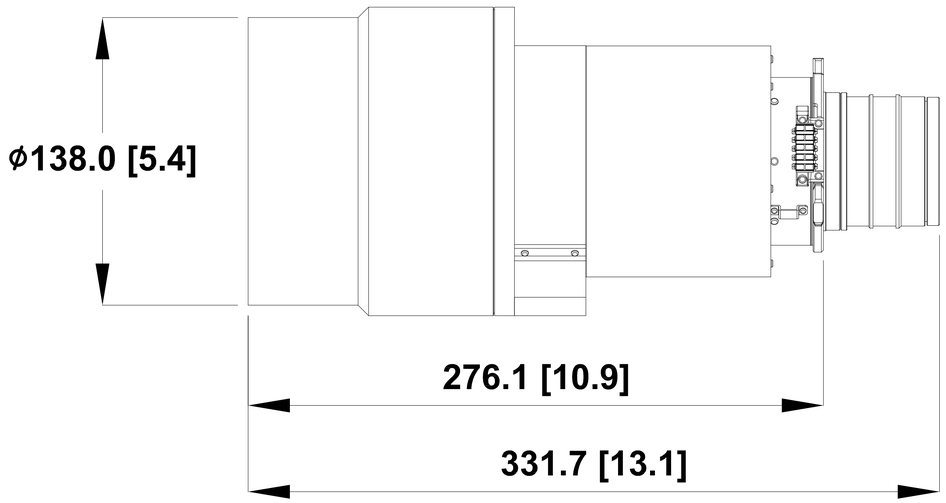

140-145101-01

LENS TYPE	DESCRIPTION	NET WEIGHT	GROSS WEIGHT
140-144100-XX	Optional Lens (0.65-0.75)	2.4 KG	3.5 KG
140-145101-XX	Optional Lens (7.2-10.8)	4.1 KG	5.1 KG

PROPRIETARY
NOT TO BE DISCLOSED OR REPRODUCED IN ANY MANNER WITHOUT THE EXPRESS WRITTEN PERMISSION OF CHRISTIE

CHRISTIE
CHRISTIE DIGITAL SYSTEMS USA, INC
CHRISTIE DIGITAL SYSTEMS CANADA, INC

SIZE	PART NUMBER	REVISION
E	020-002065-01	01

SCALE	MASS	
1:1	- LBS [- KG]	SHEET 7 OF 9

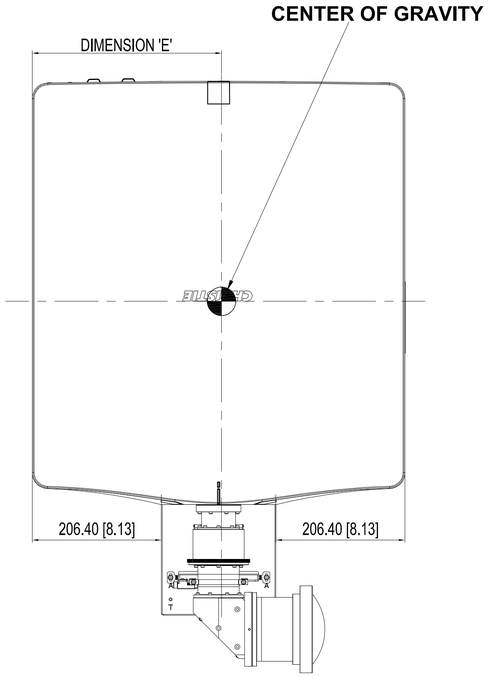

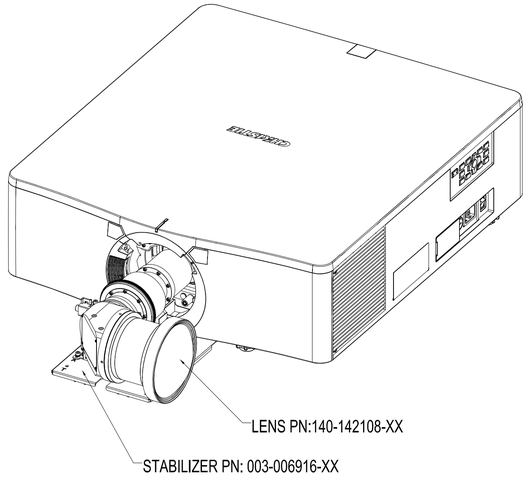

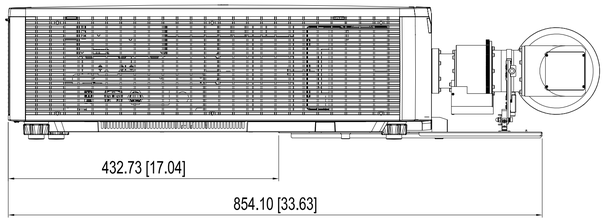

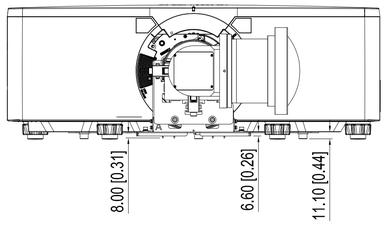

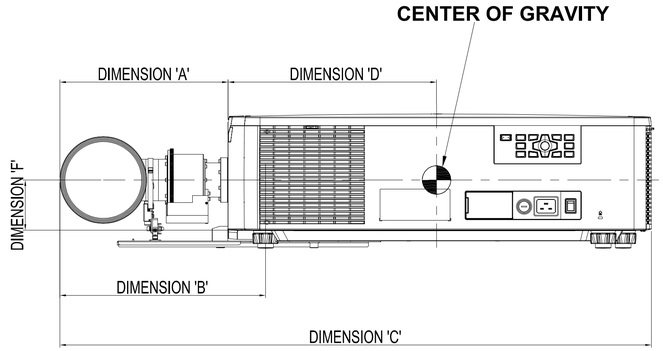

LENS PN	DESCRIPTION	DIMENSION 'A'	DIMENSION 'B'	DIMENSION 'C'	DIMENSION 'D'	DIMENSION 'E'	DIMENSION 'F'
140-142108-XX	LENS HS SERIES LEFT 0.38:1 (TR: 0.38~1)	337.0 (13.3")	329.0 (13.0")	943.0 (37.1")	320.0 (12.6")	301.0 (11.9")	80.0 (3.1")

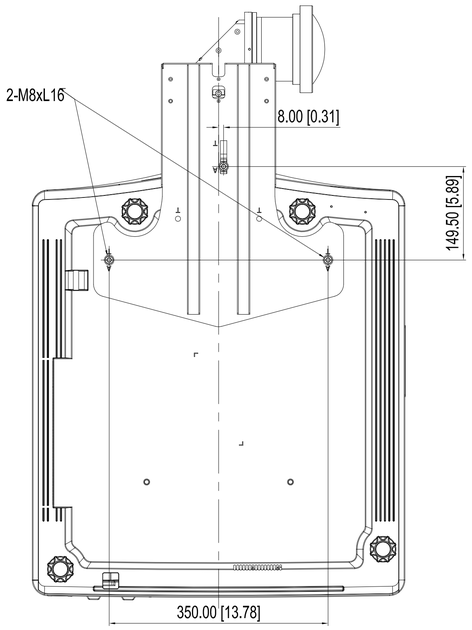

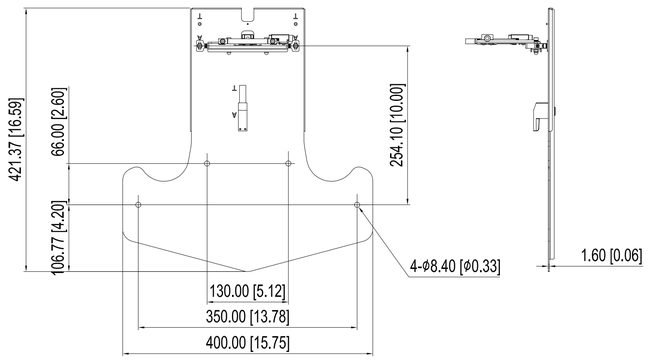

The stabilizer can not be install on a projector that was mounted on rigging frame.

PROPRIETARY
NOT TO BE DISCLOSED OR REPRODUCED IN ANY MANNER WITHOUT THE EXPRESS WRITTEN PERMISSION OF CHRISTIE

CHRISTIE
CHRISTIE DIGITAL SYSTEMS USA, INC.
CHRISTIE DIGITAL SYSTEMS CANADA, INC.

SIZE	PART NUMBER	REVISION
E	020-002065-01	01
SCALE 1:4	MASS - LBS [- KG]	SHEET 8 OF 9

PROJECTOR WITH EXTERNAL CAMERA INSTALLED

Specification	
Model:	Christie CIC 1DLP Camera
Product No:	156-155102-01
Dimensions	93 x 84 x 48.5 mm (3.67 x 3.3 x 1.91 inches)
Mass	0.2 kg (0.44 lbs)

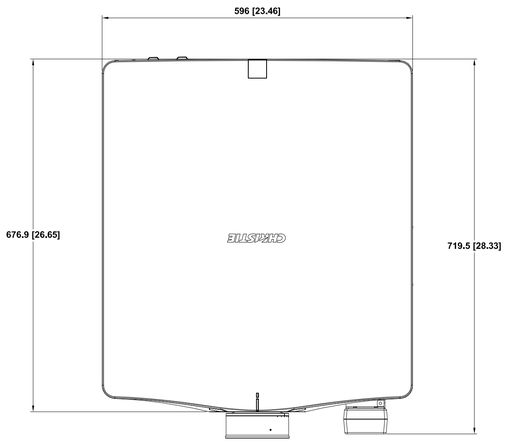

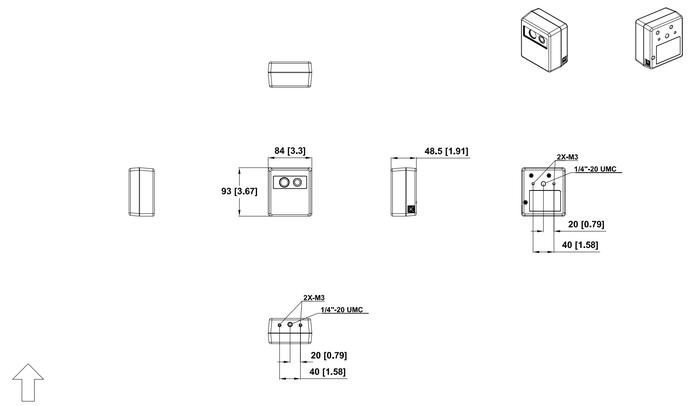

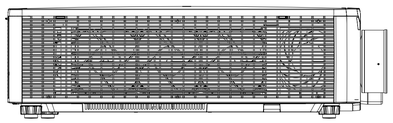

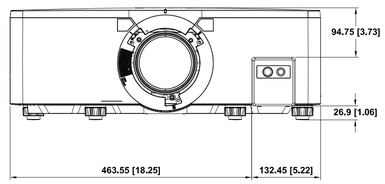

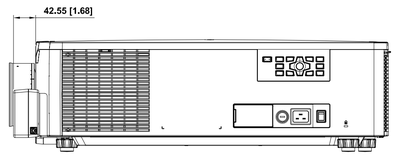

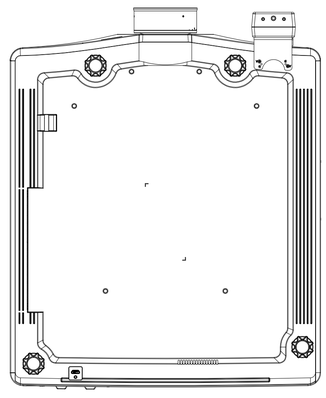

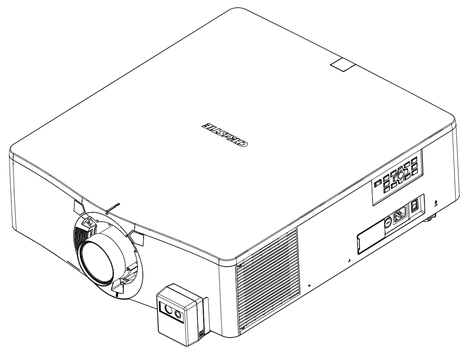

PROPRIETARY
NOT TO BE DISCLOSED OR REPRODUCED IN ANY MANNER WITHOUT THE EXPRESS WRITTEN PERMISSION OF CHRISTIE

CHRISTIE DIGITAL SYSTEMS USA, INC.
CHRISTIE DIGITAL SYSTEMS CANADA, INC.

SIZE	PART NUMBER	REVISION
E	020-002065-01	01

SCALE	MASS	
1:1	- LBS [- KG]	SHEET 9 OF 9