Lever Lock™ Series

tool free internal management system

Lever Lock™ tool free internal management system

features:

- Facilitates cable management and device mounting within the rack interior
- Tool free installation
- Allows for quick installation and removal for servicing
- Maximizes space by saving between 2 and 4 rackspaces per rack
- Vertical and horizontal styles available
- Channel, plate, angle, round-bar, offset and DIN-rail styles available
- Compatible with:
  - BGR Series
  - BGR-SA Series
  - SNE Series
  - RFR Series
  - DTRK series

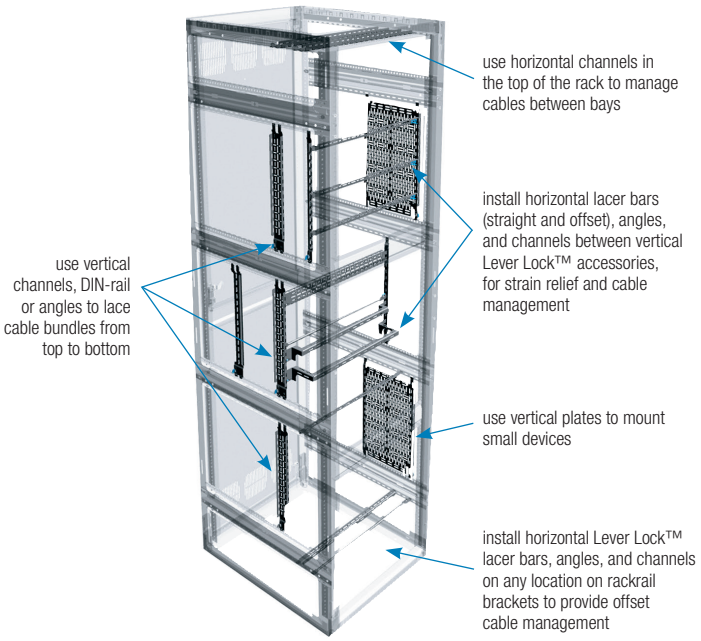

specifications:

Lever Lock™ patent pending tool-free internal management system shall be model LL-__(refer to chart). Lever Lock™ shall have tool-free mounting. Lever Lock™ shall be available in channel, plate, angle or round-bar styles, refer to chart. Lever Lock™ shall be compatible with ___(BGR, BGR-SA, SNE, RFR, DTRK, refer to chart) series enclosures. Lever Lock™ shall require mounting adapter LL- (RFR and DTRK only, refer to chart). Lever Lock™ shall be __H x __W x __D (refer to chart). Lever Lock™ shall have a series of slots configured in a universal mounting pattern. Lever Lock™ shall be GREENGUARD Gold Certified. Lever Lock™ shall comply with the requirements of RoHS EU Directive 2002/95/EC. Lever Lock™ shall be manufactured by an ISO 9001 and ISO 14001 registered company. Lever Lock™ shall be warrantied to be free from defects in material or workmanship under normal use and conditions for the lifetime of the product.

Customizable specification clips available at middleatlantic.com

PATENT PENDING

RoHS

GREENGUARD GOLD

PRODUCT CERTIFIED FOR LOW CHEMICAL EMISSIONS
UL.COM/GG
UL 2818

accessories

- Adapter for use in RFR Series enclosure shall be LL-RFR
- Adapter for use in DTRK Series, 10-18 space, shall be LL-DTRK

Lever Lock™ Series
vertical basic dimensions

all dimensions in inches unless otherwise noted [all dimensions in brackets are in millimeters]

vertical channel options
model numbers LL-VC17 & LL-VC21

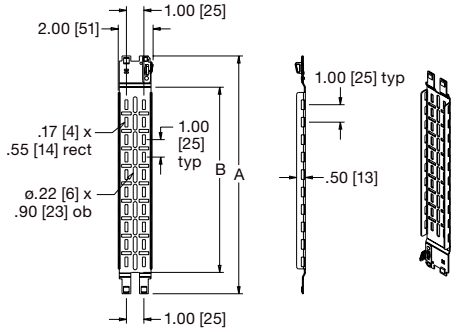

vertical angle options
model numbers LL-VA17 & LL-VA21

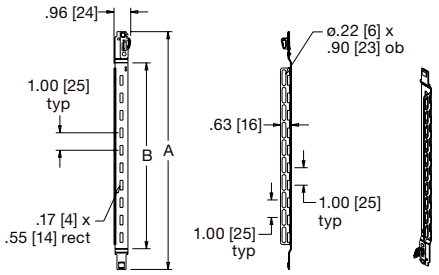

Part #	"A" Overall Length	"B" Useable Length
LL-VC17	13.61 [346]	10.64 [270]
LL-VC21	17.11 [435]	14.10 [358]
LL-VA17	13.61 [346]	10.64 [270]
LL-VA21	17.11 [435]	14.10 [358]

vertical 10" deep plate options
model numbers LL-VP1710 & LL-VP2110

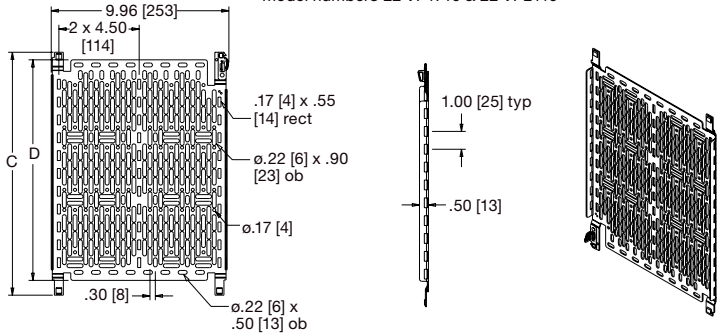

Part #	"C" Overall Length	"D" Useable Length
LL-VP1710	13.61 [346]	12.36 [314]
LL-VP2110	17.11 [435]	15.86 [403]

Vertical Lever Lock™ Useage Table

Part#	LL-VP1710	LL-VP2110	LL-VA17	LL-VA21	LL-VC17	LL-VC21	LL-VDIN17	LL-VDIN21	LL-VDIN17-4	LL-VDIN21-4
GR Series, 19 & 41 space	X		X		X		X		X	
BGR Series, 25, 38 & 45 space		X		X		X		X		X
SNE Series,		X		X		X		X		X
RFR Series*	X		X		X		X		X	
DTRK Series, 10-18 space**				X		X		X		X

*Requires LL-RFR Adaptor ** Requires LL-DTRK Adaptor

vertical din rail options
model numbers LL-VDIN17 & LL-VDIN21

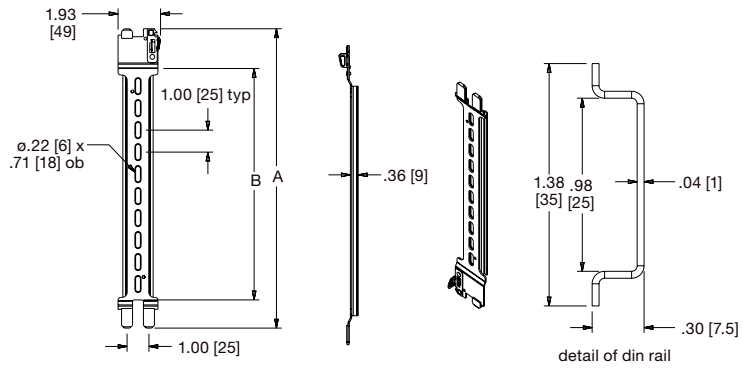

Part #		"A" Overall Length	"B" Useable Length
1 Piece	4 Pieces		
LL-VDIN17	LL-VDIN17-4	13.61 [346]	10.56 [268]
LL-VDIN21	LL-VDIN21-4	17.11 [435]	14.06 [357]

Lever Lock™ Series
horizontal basic dimensions

all dimensions in inches unless otherwise noted [all dimensions in brackets are in millimeters]

horizontal angle option
model number LL-HA21

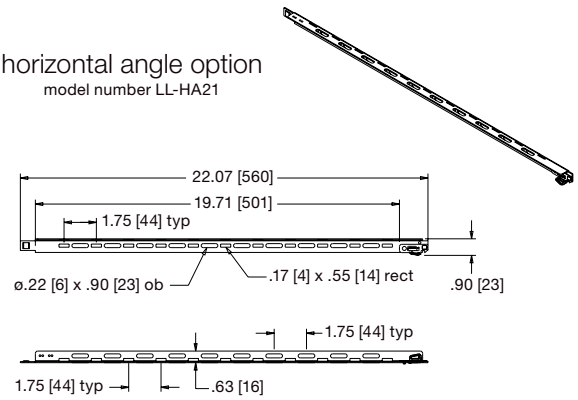

horizontal channel option
model number LL-HC21

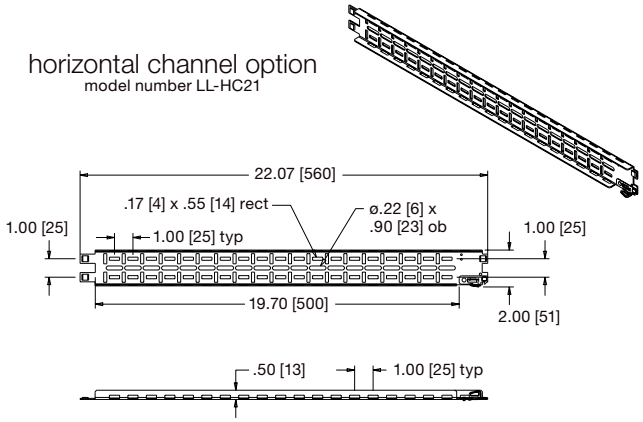

horizontal round option
model number LL-HR21

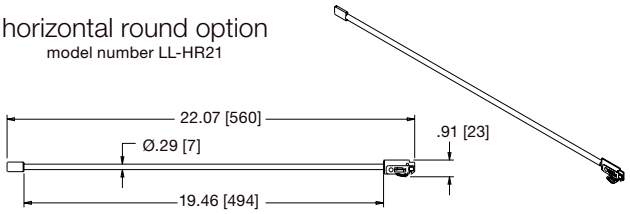

horizontal angle option
model number LL-H2A21

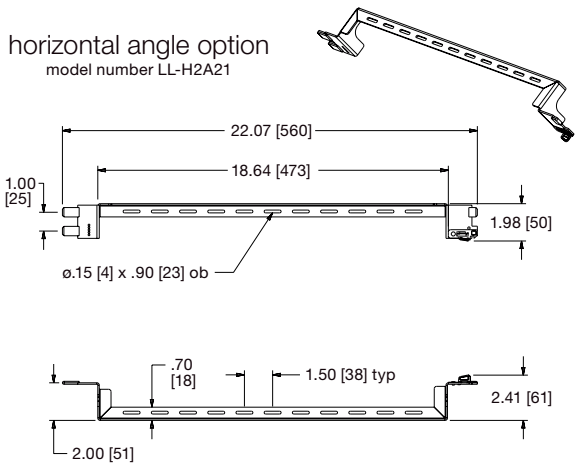

horizontal angle option
model number LL-H4A21

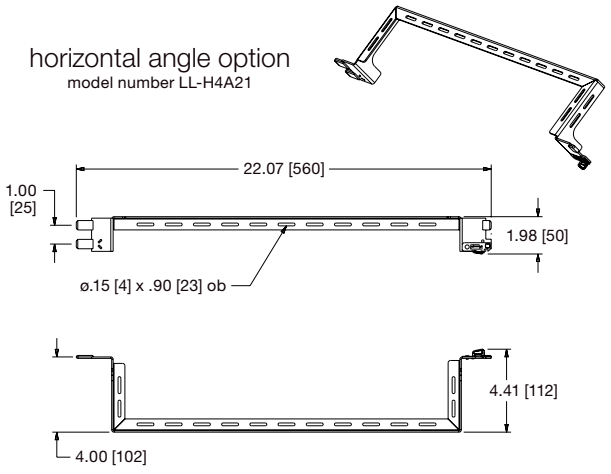

Notes:
1) Horizontal options only mount to BGR series enclosures, all sizes
2) Can be mounted between rackrail brackets or vertical leverlock accessories