HANSA

Installation and maintenance guide

4-7

8-9

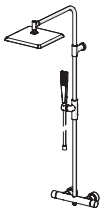

10-12

13-15

16-18

19

5808 0301

I (ISO 3822)
EN1111
100 - 1000 kPa
0.25 l/s (300 kPa (Eco))
0.29 l/s (300 kPa)
max. +80°C

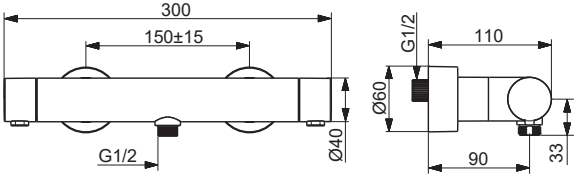

mpi.hansa.com/58080301

5810 2301

I (ISO 3822)
EN1111
100 - 1000 kPa
0.23 l/s (300 kPa (Eco))
0.27/0.38 l/s (300 kPa)
max. +80°C

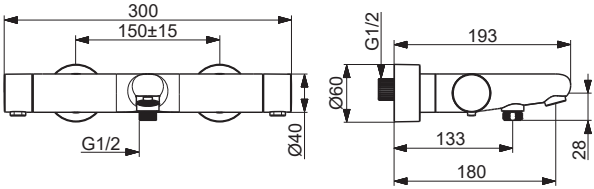

mpi.hansa.com/58102301

4813 0421

I (ISO 3822)
EN1111, EN1112, EN1113
100 - 1000 kPa
0.17 l/s (300 kPa (Eco))
0.18 l/s (300 kPa)
max. +65°C

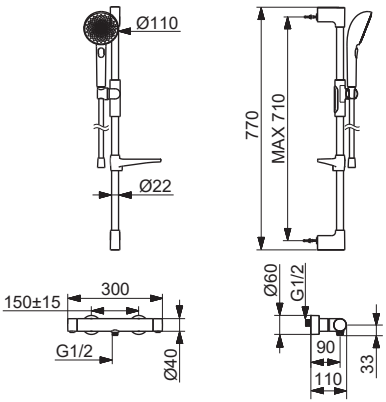

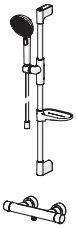

mpi.hansa.com/48130421

4813 0431

I (ISO 3822)
EN1111, EN1112, EN1113
100 - 1000 kPa
0.17 l/s (300 kPa (Eco))
0.18 l/s (300 kPa)
max. +65°C

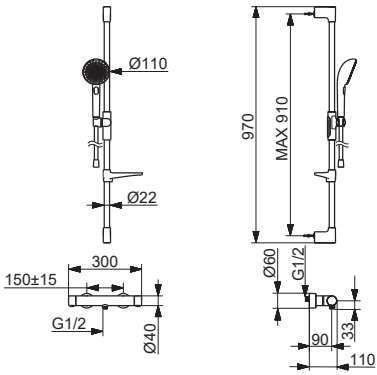

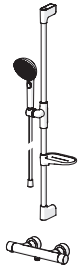

mpi.hansa.com/48130431

4719 9103

I (ISO 3822)
EN1111, EN1112, EN1113
100 - 1000 kPa
0.16 l/s (300 kPa (Eco))
0.17 l/s (300 kPa)
max. +65°C

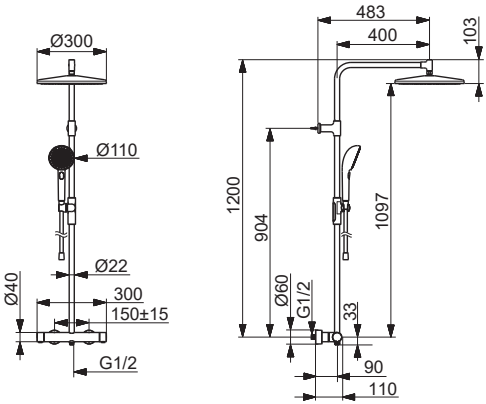

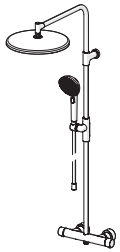

mpi.hansa.com/47199103

4719 9113

I (ISO 3822)
EN1111, EN1112, EN1113
100 - 1000 kPa
0.12 l/s (300 kPa (Eco))
0.13 l/s (300 kPa)
max. +65°C

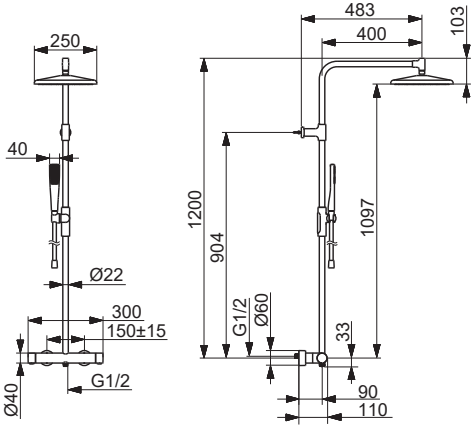

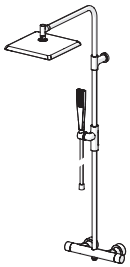

mpi.hansa.com/47199113

4715 0120

I (ISO 3822)
EN1112, EN1113
50 - 500 kPa
0.13 l/s (300 kPa w/ flow reducers)
max. +65°C

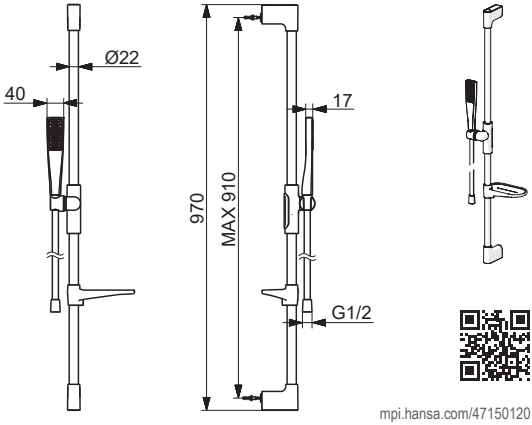

mpi.hansa.com/47150120

4715 0130

I (ISO 3822)
EN1112, EN1113
50 - 500 kPa
0.13 l/s (300 kPa w/ flow reducers)
max. +65°C

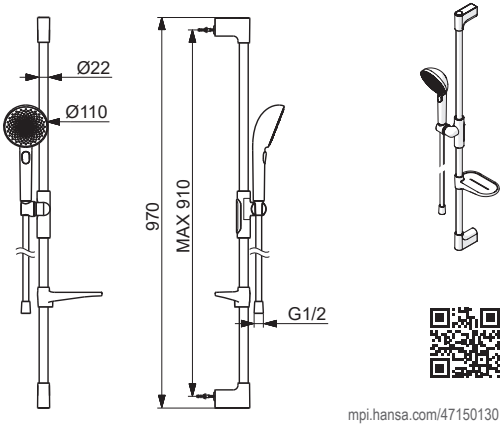

mpi.hansa.com/47150130

4716 0130

I (ISO 3822)
EN1112, EN1113
50 - 500 kPa
0.2 l/s (300 kPa w/ flow reducers)
max. +65°C

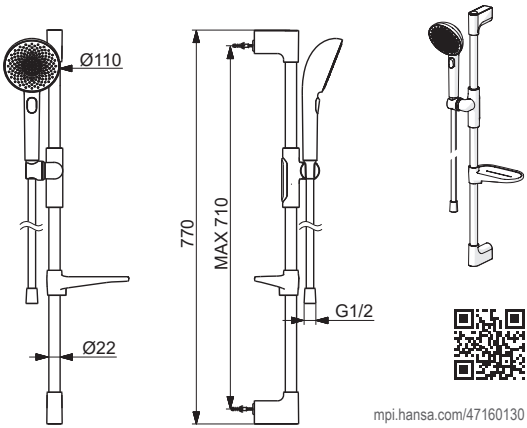

mpi.hansa.com/47160130

4717 0120

I (ISO 3822)
EN1112, EN1113
50 - 500 kPa
0.2 l/s (300 kPa w/ flow reducers)
max. +65°C

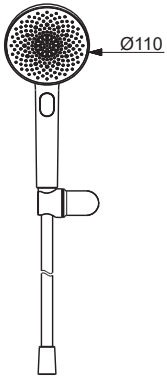

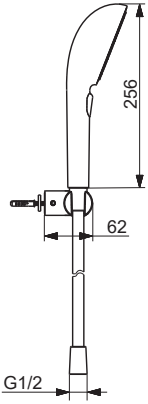

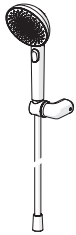

mpi.hansa.com/47170120

4717 0130

I (ISO 3822)
EN1112, EN1113
50 - 500 kPa
0.13 l/s (300 kPa w/ flow reducers)
max. +65°C

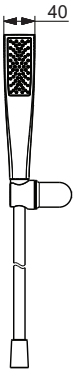

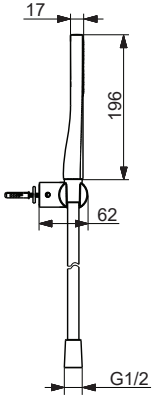

mpi.hansa.com/47170130

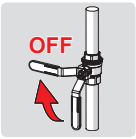

①

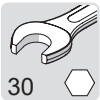

③

max. 1600 kPa

1

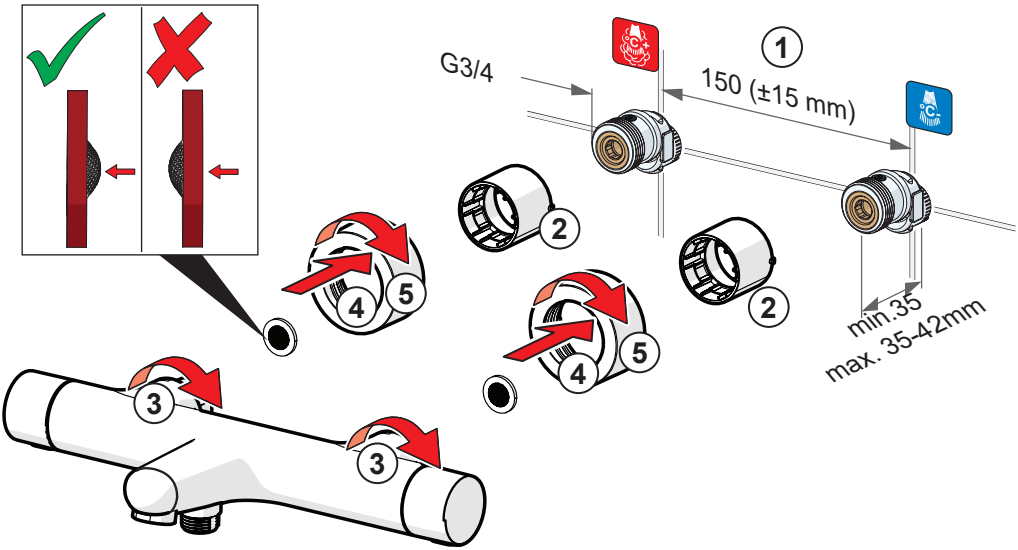

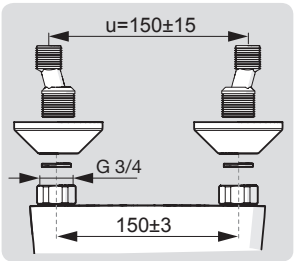

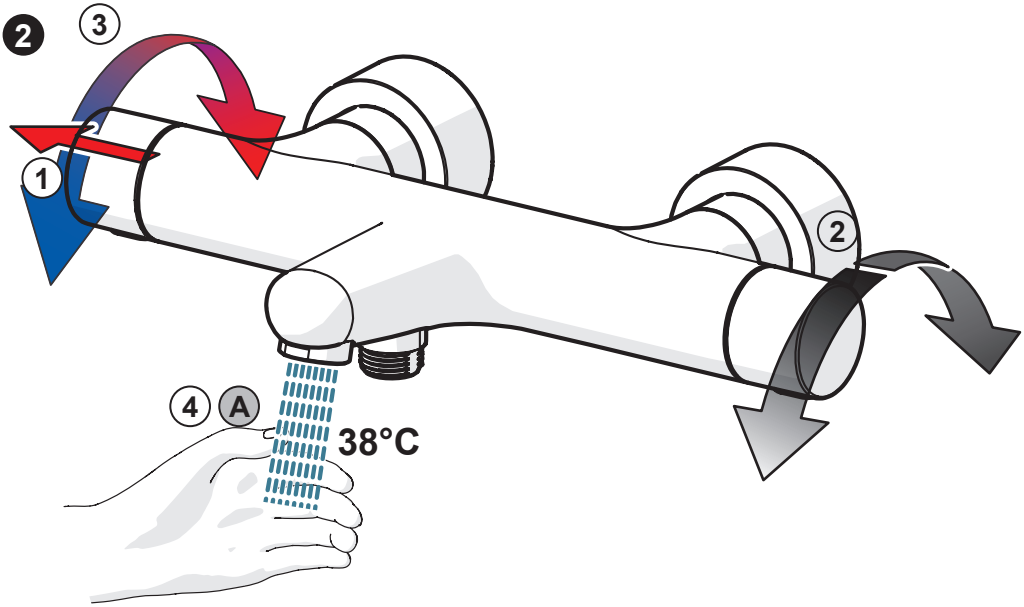
2
3
1
2
4
A
38°C

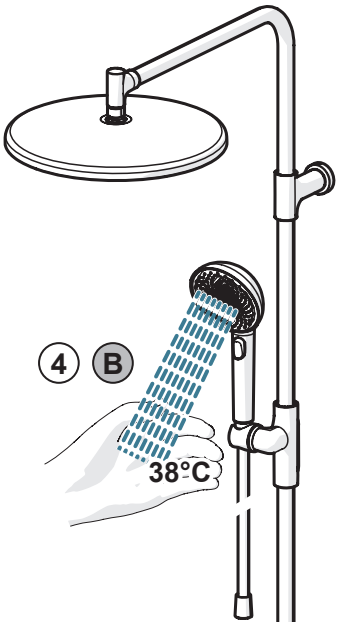
4
B
38°C

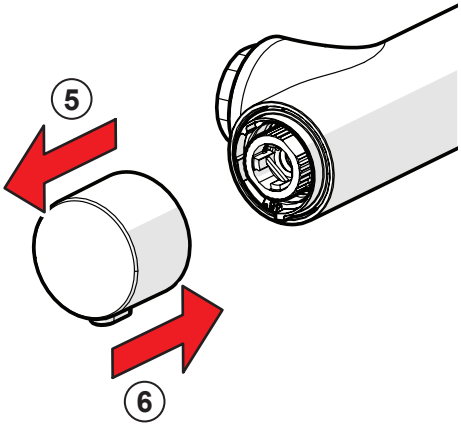
5
6

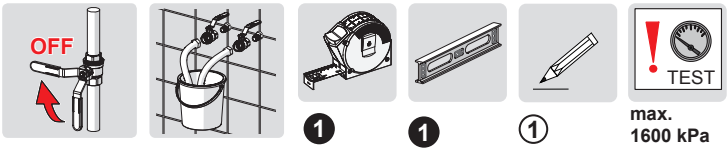

1 ⚠ L 1

4719 9103

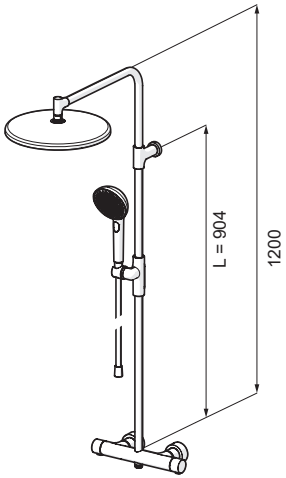

4719 9113

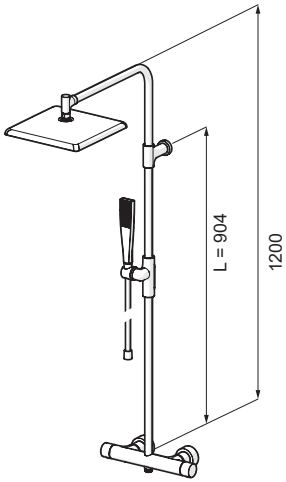

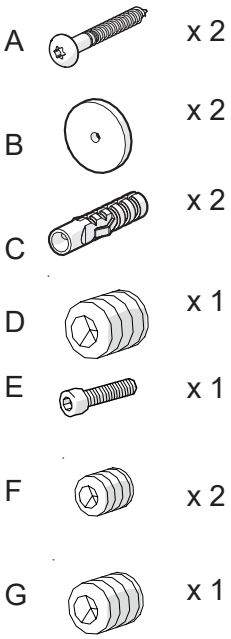

❷

②

❷ ⚠ L

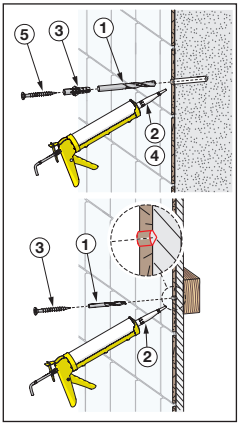

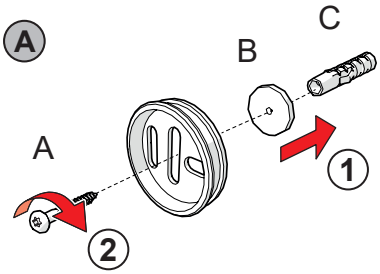

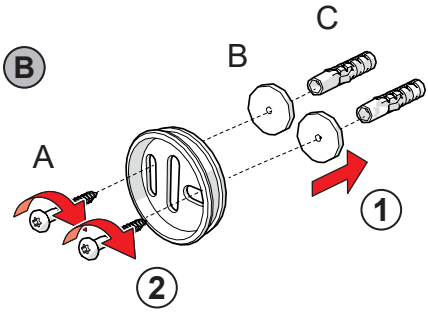

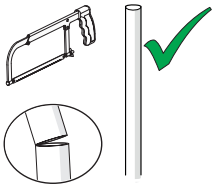

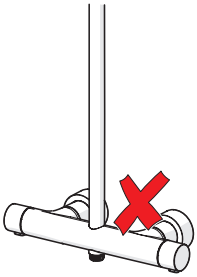

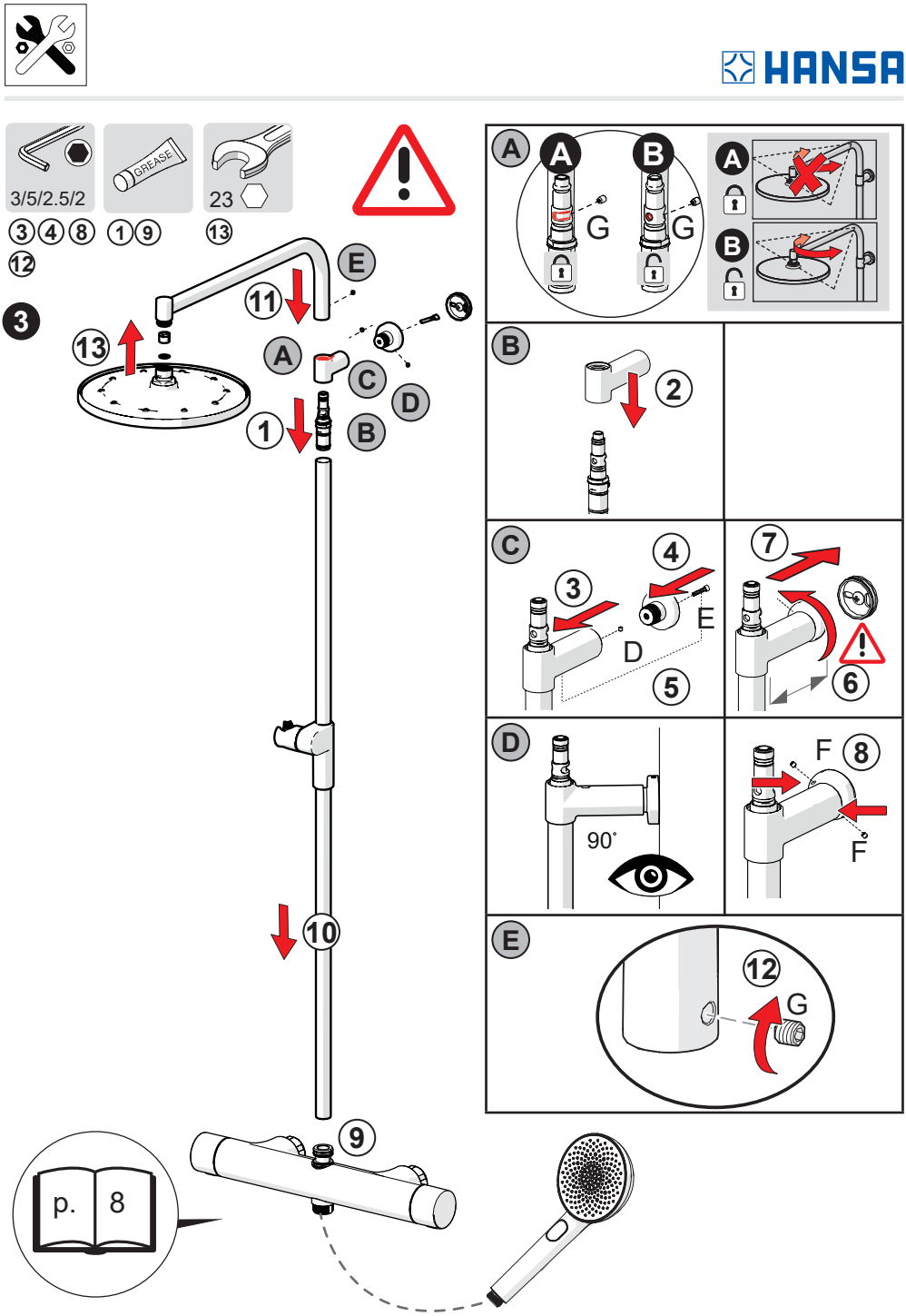
3/5/2.5/2
GREASE
23
③④⑧ ①⑨
⑬
⑫
3
E
11
13
A
C
D
1
B
10
9
p. 8
A
B
G
G
A
B
B
2
C
4
3
E
D
5
7
6
D
90˚
F
8
F
E
12
G

A 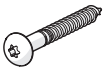 x 2

B x 2

C 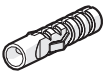 x 2

D x 2

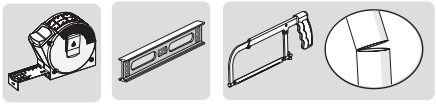

1 1

1

4715 0120

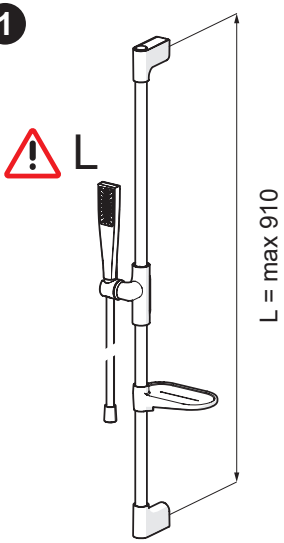

4715 0130

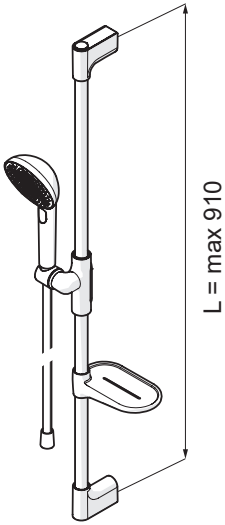

4716 0130

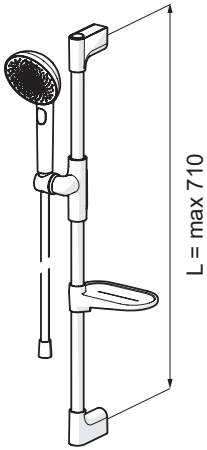

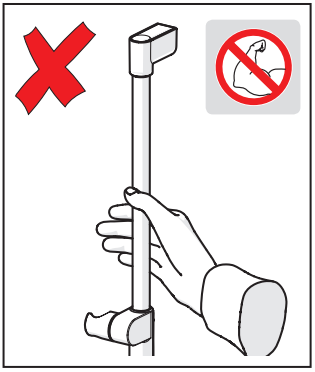

HANSA

2 3

2 8 9

2

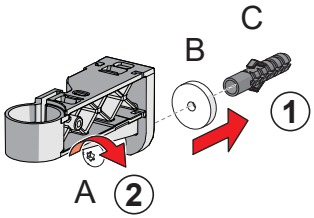

3

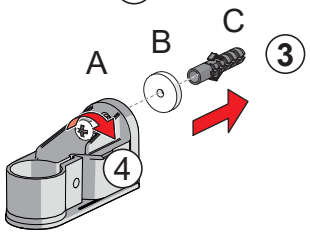

(4)

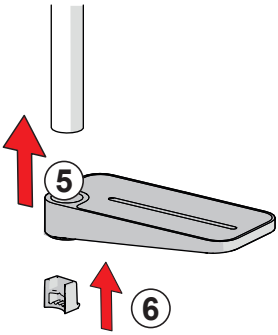

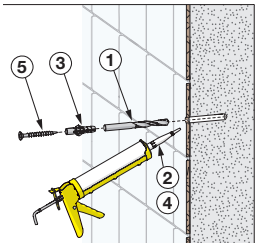

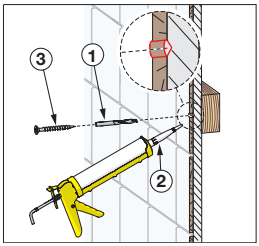

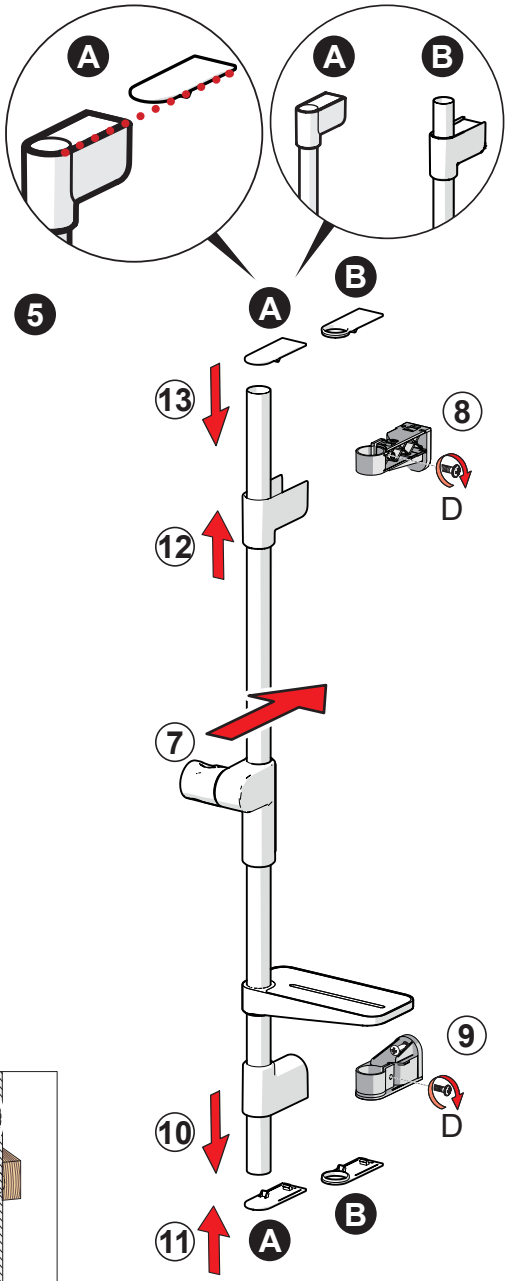

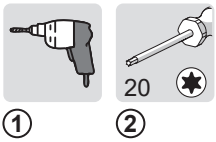

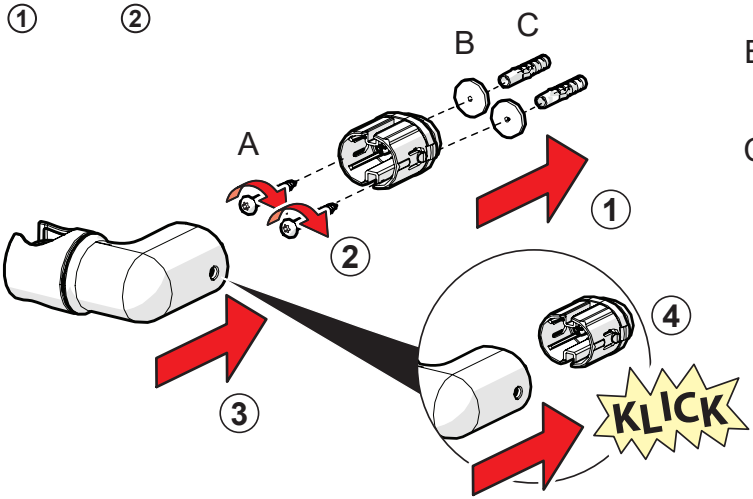

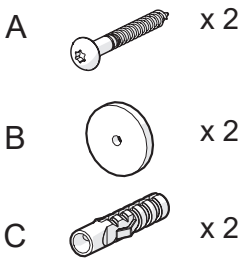

Max 65°C

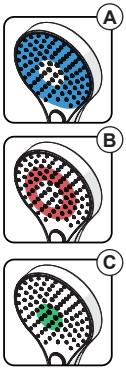

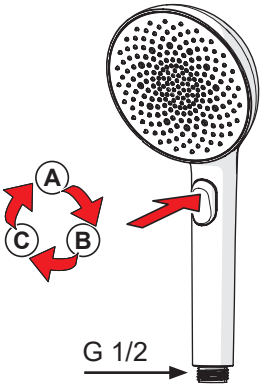

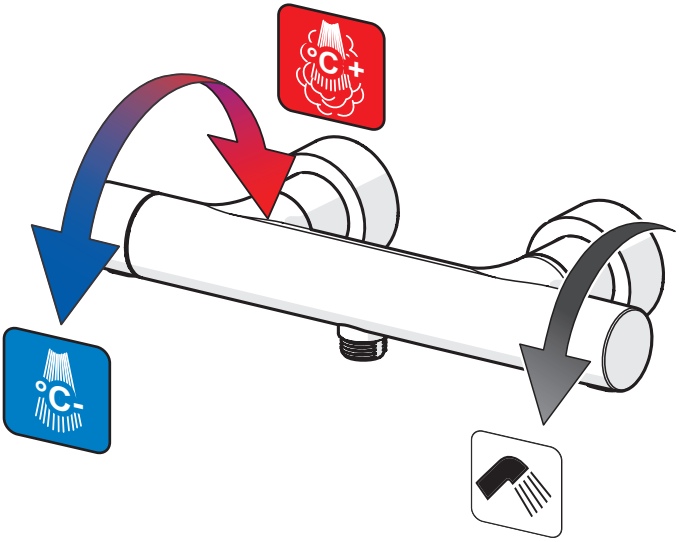

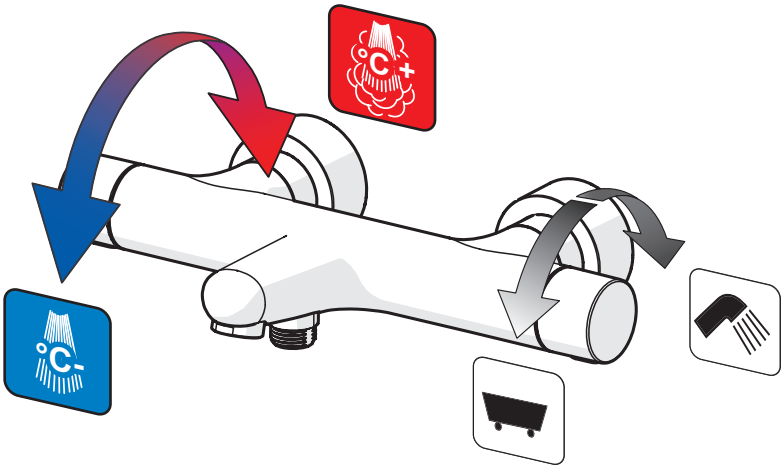

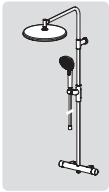

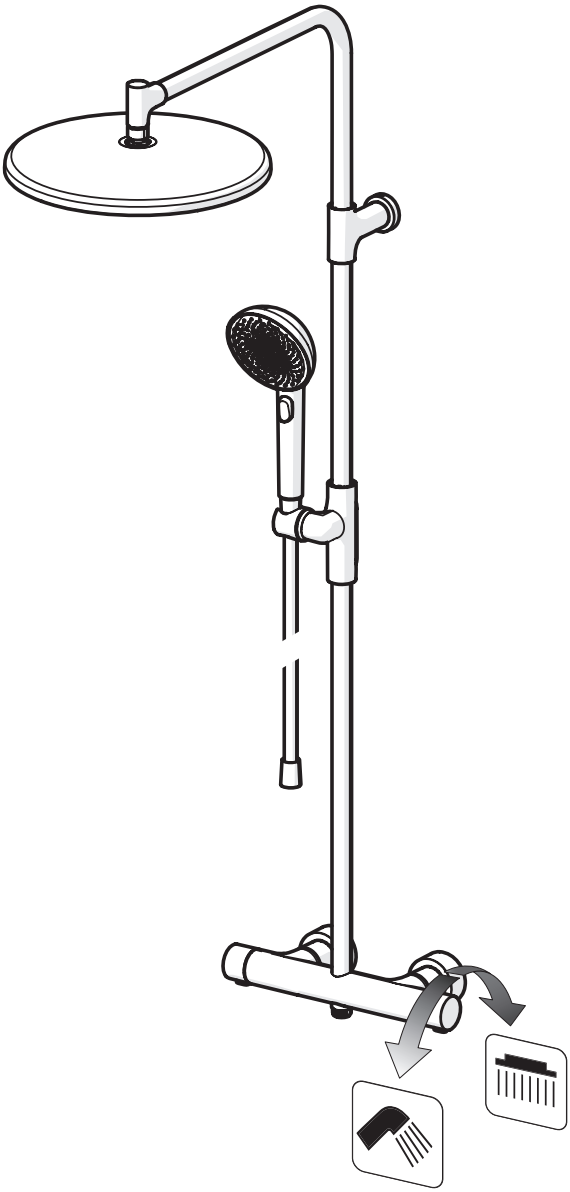

HANSA

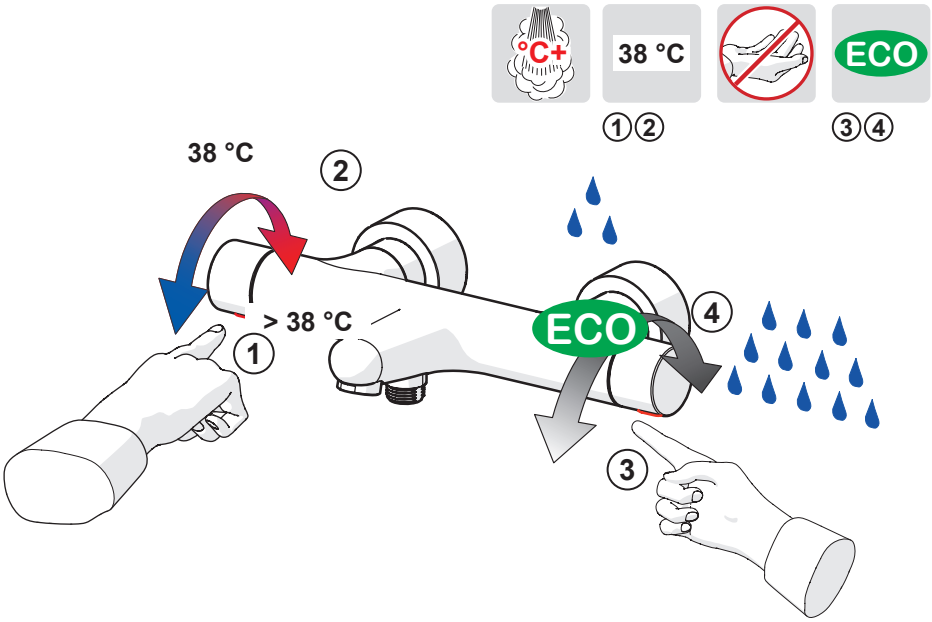

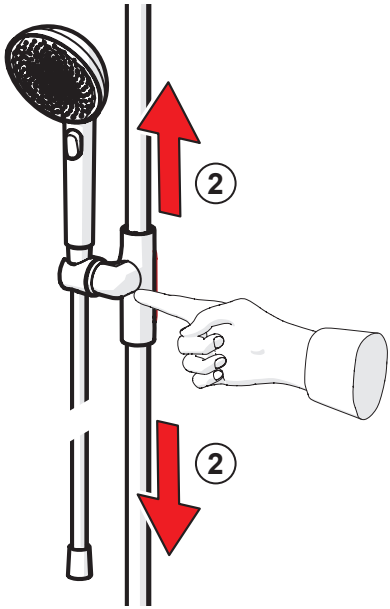

①

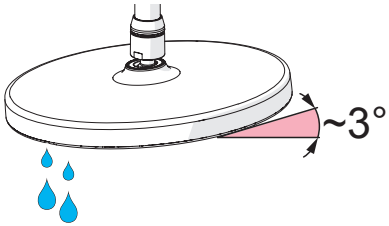

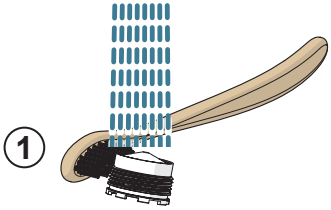

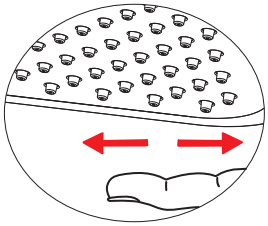

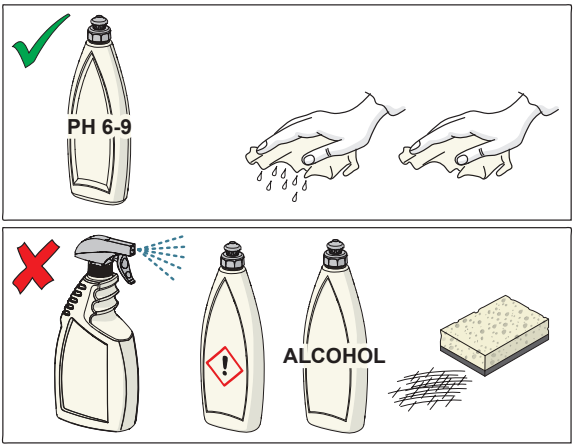

cleaning.hansa.com

About Oras Group
Oras Group is a significant European provider of sanitary fittings:
the market leader in the Nordics and a leading company in Continental Europe.
The company's mission is to create the smartest water experiences
for everyone and its vision is to become the Perfect Flow Company.
The Group has two strong brands, Oras and Hansa. Oras Group is owned
by Oras Invest, a family company, and an industrial owner.

The domicile of Oras Ltd, the parent company of the Group,
is located in Rauma, Finland, and the Group has two manufacturing sites:
Olesno (Poland) and Rauma (Finland).
The Group operates with its own staff in 17 markets. Oras Group's net sales
were 233.5 million euros in 2021 and at the end of the period the company
employed 1255 people.

943529D-09-25

HANSA Armaturen GmbH
P. O. BOX 81 02 40
D-70519 Stuttgart
Sigmaringer Strasse 107
D-70567 Stuttgart
Tel.: +49 711 16 14 0
Fax: +49 711 16 14 368
info@hansa.de
www.hansa.com

HANSA