Sri Lanka Journal of Marketing
University of Kelaniya - Sri Lanka

SLJM Vol 12 Issue 1: January-June 2026
ISSN 2719 – 2598 (Online)

RESEARCH ARTICLE

The Impact of Green Marketing on Consumer Impulsive Buying Behavior with Special Reference to the FMCG Industry in the Western Province, Sri Lanka

M. W. M. Dilhani[1*]
[1]*Department of Marketing, Faculty of Management Sciences, University of Benin*
***Corresponding author:** madushikadilhani24@gmail.com

HOW TO CITE (APA 7TH)
Dilhani, M. W. M. (2026). The impact of green marketing on consumer impulsive buying behavior with special reference to the FMCG industry in the Western Province, Sri Lanka. *Sri Lanka Journal of Marketing, 12*(1), 59–92. https://doi.org/10.4038/sljmuok.v12i1.223

DOI: https://doi.org/10.4038/sljmuok.v12i1.223

Abstract

The present study examines the importance of green marketing variables for consumer green impulsive buying behavior, focusing on green product innovation, green promotion, green distribution, and green pricing. The study focuses on the importance of green variables in the new normal, the impact of consumer environmental concerns on business processes, and the depth of green variables that drive impulsive buying in the FMCG industry in the West. The present study mainly focused on the FMCG industry in Sri Lanka, which is concentrated on everyday products that people use and can significantly impact the environment. Consequently, the present study shows that green marketing directly influences consumer impulsive buying behavior. The present study has used quantitative research by analyzing data with SPSS software. The study has been conducted using an online questionnaire with 175 respondents who regularly shop in modern trade stores in Western Sri Lanka. The study has corresponded that the green product innovation has the highest influence with standard coefficient beta (0.786) After Green distribution (0.572), Green promotion (0.228) and lastly green pricing (0.287) with the lowest impact by indicating 91.4% R square by explaining more parameters in green marketing in the perceptions of western consumers in FMCG industry in Sri Lanka as a result of regression analysis. The present study has focused on future research into the impact of mediation and moderation, especially in the FMCG

Sri Lanka Journal of Marketing by Department of Marketing Management, University of Kelaniya is licensed under a Creative Commons Attribution 4.0 International License.

industry, which has centered on brands and other industry considerations, aligning with industry-specific green marketing variables.

Keywords: *FMCG Industry, Green Distribution, Green Marketing, Green Pricing, Green Product Innovation, Green Promotion, Impulsive Green Purchase Intention*

1. Introduction

Both consumers and businesses are aware of the importance of sustainable practices, given the challenges posed by environmental issues. Promoting environmentally friendly products and ethical business practices is known as "green marketing," and it has become a vital tactic for brands to connect with consumers' values. The Fast-Moving Consumer Goods (FMCG) industry, which has a significant environmental impact, is crucial to Sri Lankan consumers' daily lives and the country's economic development. By leveraging factors that affect green marketing to create a positive emotional connection in customers' minds, this study investigates how green marketing initiatives affect impulsive buying behavior by connecting with customers' emotional states within the Sri FMCG industry in the western province of Sri Lanka. Environmental issues have gained attention in Sri Lankan and international markets in recent years. Environmentally friendly product features, sustainable packaging, and ethical branding have all been taken into account when evaluating the role of green marketing strategies. Because urban areas are the ones that suffer the most from environmental barriers when factors like rising temperatures are taken into account, Sri Lankan consumers, especially those living in urban areas, are primarily seeking environmentally friendly options. (Munasinghe & Shantha, 2021) An active platform for observing the impact of green marketing on impulsive consumer purchases is Sri Lanka's FMCG industry. For example, Sooriyaarachchi (2023) looked into how consumer attitudes, brand knowledge, and green product positioning affected supermarket shoppers in Colombo. The study found that consumers' intention to buy green products is greatly increased by positive brand positioning and knowledge of green marketing.

Similarly, studies on Sri Lankan millennials' green brand equity, emotional attachment, and green advertising revealed that better purchase intentions were correlated with stronger brand

equity and successful promotional campaigns (Warnakulasooriya et al., 2022). Concurrently, Rathnayaka and Gunawardana (2021) investigated how social influence, environmental responsibility, health consciousness, and environmental awareness affected the intention to make green purchases in the Galle district. According to their research, green purchasing behavior is strongly predicted by consumers' green attitudes, including social influence and environmental consciousness (Rathnayaka & Gunawardana, 2021). The significance of packaging was also emphasized by (Munasinghe & Shantha, 2021), who found that product attributes and environmental concerns, particularly packaging, are important factors that influence millennials' green buying decisions. Numerous studies have also shown that different green marketing strategies are effective. According to a survey by Jayasinghe (2022), consumers' intentions to engage in green behavior were significantly positively impacted by sustainable campaigns and green packaging. According to Sewwandi and Dinesha (2022), consumers of electronics are significantly motivated to make green purchases by eco-labeling, eco-branding, and environmental advertisements (Jayasinghe, 2022).

Senevirathna and Halwathura (2025) conducted a thorough study in Colombo that looked at environmental awareness, media influence, and green product features. According to Senevirathna and Halwathura (2025), social media was crucial in shaping consumer awareness and behavior, and income, education, and gender all positively influenced purchasing attitudes toward green products. In the meantime, Peiris et al. (2024) emphasized the impact of consumption values like epistemic (value of novelty/curiosity), conditional (e.g., situational benefits), and functional (e.g., product effectiveness) on the purchase of green household cleaning products in Sri Lanka's Western Province.

All things considered, this research demonstrates that green marketing influences consumers' impulsive buying decisions positively, thereby promoting green buying practices in Sri Lanka's fast-moving consumer goods industry. The majority of previous research on green marketing has examined only common criteria, such as eco-labels or green advertising; it has not examined how various key green marketing strategies are interdependent. To understand the overall concept of green marketing in the FMCG industry in Western Sri Lanka, this study primarily focuses on four key areas: green product innovation, green pricing, green

distribution, and green promotion. This study focuses on impulsive buying, or people's tendency to make snap purchase decisions rather than planned ones.

2. Industry Overview

The overall trend within the Sri Lankan Fast-Moving Consumer Goods (FMCG) sector is a sustained upward progression. The total turnover from listed FMCG companies is estimated to grow from Rs 282 billion in 2023 to Rs 319 billion in 2025 (Daily Mirror, 2026). The growth rate is also anticipated to quicken, from 5% in 2024 to 7% in 2025, signaling steady growth in purchasing confidence and a shift to modern trade (Technavio, 2026). In the Western Province, which represents the hub of modern trade, sales revenue of supermarkets has already reached over Rs 110 billion, increasing at a 10% year-on-year rate, due to the high priority placed on convenience and a wide variety of promotional offers by consumers (Fitch Solutions, 2025).

Green marketing has shifted from a niche area to one central to brand identity, and 2026 is highlighted as a "decisive year" when eco-conscious consumption behavior is expected to rise in Sri Lanka (JPI, 2025). A survey conducted in the Western province reveals that functional and epistemic value are significant predictors of green purchase of household cleaning products, despite a sustained attitude-intention gap among young millennials (Peiris et al., 2024). An attitude-intention gap still exists, but environmental knowledge is now the strongest predictor of green purchase intent, suggesting increased consumer sensitivity to the environmental benefits promoted by FMCG companies (SILVA & PEIRIS, 2023).

The confluence between green marketing and impulsive purchasing is heightened in busy and fast-moving city centers such as the Western province, as rapid digital media assimilation coupled with quick commerce conditioning of consumers is likely to play a key role in consumption (Technavio, 2026). It appears that while a customer assesses products based on an 'environmental lens,' purchases can occur as impulses due to the visible displays of sustainability at the shelf level (JPI, 2025). Unlike the emphasis on price in traditional marketing, a contemporary Sri Lankan market illustrates how green branding and eco-labeling influence consumer assessment directly, potentially skipping the longer cognitive process of

thinking to produce impulsive buying behavior at the point-of-sale in FMCG product categories (Jayasinghe, 2022).

3. Literature Review

3.1. Green Marketing

Growing eco-consciousness has made green marketing a key strategic approach for FMCG companies in Sri Lanka. According to a survey conducted by (Wanninayake & Randiwela, 2008), which involved 160 consumers in Western Province, eco-friendly packaging was the most popular of the "4 Ps" of green marketing, with almost 70% of respondents saying they would be willing to pay more for products that were packaged responsibly. A recent study by Dissanayake and Bandara (2024) 197 consumers found that green brand awareness, which is increased by transparent practices and credible messaging, significantly increases green purchasing behavior. Importantly, this effect is mediated by green trust. The FMCG industry in Sri Lanka was specifically examined (Dissanayake & Bandara, 2024). In support of these conclusions, it was found that 200 high-income consumers' purchasing behavior and their awareness of sustainable packaging showed strong positive correlations, with awareness having the greatest impact (β highest in the regression) (Ilangasekara & Siriwardana, 2022). All of these studies highlight the effectiveness of green marketing for FMCG brands in Sri Lanka, particularly in packaging, branding, and reliable communication.

3.2. Green Marketing in the FMCG Industry in Sri Lanka

To examine how green packaging affects consumers' intentions to buy FMCG products, a quantitative study was conducted among millennials (ages 18-35) in the Gampaha District of Sri Lanka (Munasinghe & Shantha, 2021). Product attributes, environmental concern, government involvement, and demographic factors were the four determinants they tested using a structured questionnaire and sophisticated statistical tools (PLS-SEM, chi-square, Pearson correlation). The findings showed that purchase intention was strongly positively correlated with environmental concern and product attributes (such as material and design). On the other hand, gender, income, and government role had no discernible impact. This implies that rather than external demographic or regulatory factors, younger consumers are

primarily driven by their personal environmental values and perceptions of the quality of green products (Munasinghe & Shantha, 2021). The effect that multinational FMCG companies' CSR initiatives have on Sri Lankan consumers' intentions to buy was examined by (Ganegoda & Weerasekera, 2024). They found that CSR practices have a direct, positive impact on purchase intention, based on a survey of 200 consumers and structural equation modeling. More significantly, three important brand-related constructs, perceived quality, brand attitude, and brand image, acted as partial mediators in this relationship. Their results support the theories of planned behavior and social exchange, showing that CSR improves consumers' emotional and cognitive brand perceptions, which in turn increase their propensity to buy.

3.3. Green Impulsive Purchasing Behavior

The impact of brand knowledge and green brand positioning on impulsive purchase intentions by conducting a quantitative survey with 300 consumers in Colombo, Kandy, and Matara (Lakchan & Samaraweera, 2023). They discovered, using the Hayes PROCESS macro and regression, that positive attitudes toward green brands were fueled by strong brand positioning around environmental features. Positive emotional reactions were boosted by greater brand awareness. The impulsive intentions to buy green products were then greatly increased by these attitudes. The study demonstrates that even in Sri Lanka's expanding green FMCG market, eco-friendly purchases can be sparked by clear positioning and awareness of green values (Lakchan & Samaraweera, 2023). To determine how social media exposure and awareness of green products affect consumer behavior, 130 shoppers were surveyed in supermarkets in Colombo (Senevirathna & Halwathura, 2025). Even though the study concentrated on general green behavior rather than specifically on impulsive buys, they found that media-driven green awareness and promotional messaging can influence consumers to make snap decisions at checkout, effectively setting the stage for impulsive green purchases (Senevirathna & Halwathura, 2025).

3.4. Four Main Green-Marketing Sub-Variables in FMCG (Sri Lanka)

Green Product Innovation. In Sri Lanka, about 28% of FMCG companies have introduced eco-friendly innovations. These include biodegradable packaging, refillable containers, and

compostable materials as part of their sustainability efforts. According to a study conducted among millennials in Gampaha, eco-packaging has a significant impact on their purchasing decisions, particularly when product attributes and environmental concerns coincide (Amarakoon et al., 2018). According to Prakash et al. (2024), eco-friendly product innovation, such as sustainable packaging and zero-waste product designs, has a positive effect on altruistic motivation and consumer purchase intention, which are essential factors leading to impulsive buying in the sustainable market.

Green Promotion (Eco-Labeling). Only about 18% of Sri Lankan supermarkets used eco-labels or environmental messages in their marketing, per previous research by (Wanninayake & Randiwela, 2008). Wider difficulties in promoting green products are reflected in this low adoption rate. But according to more recent comparisons, consumers are more likely to make green purchases from supermarkets like Cargills that have visible eco-labels than from others. According to Sair (2025), green marketing through clear eco-labels and online marketing communications have a great impact on green purchase behavior by enhancing emotional engagement and establishing consumer trust, which leads to impulsive purchase.

Green Distribution. According to Farooq et al. (2025), sustainable distribution and transparent, low-carbon logistics can significantly improve brand reputation and trust. According to another study, increased visibility and understanding of a brand's environmental commitments, possibly including distribution, builds consumer loyalty and trust (Swarnika & Rathnasiri, 2022). According to Wei et al. (2023), logistical elements like low distribution costs and short delivery time are significant moderators that can enhance the impulsive buying phenomenon for consumers engaging with online ads for environmentally friendly products on social media.

Green Pricing. According to a 2023 study, roughly 34% of Sri Lankan consumers are willing to pay an additional 5–10% for FMCG products certified as green. Purchasing sustainable packaging was found to be strongly positively correlated with willingness to pay in another study of high-income consumers in Colombo. This implies that when products have obvious green credentials, consumers react favorably to eco-premiums (Amarakoon et al., 2018). According to Morel and Kwakye (2012), favorable consumer perceptions towards green

pricing, such as paying a premium for environmental attributes, are highly associated with purchase intentions and variability in purchase behavior in FMCG.

3.5. Relationship Between Green Marketing and Customer Attitude in Sri Lankan FMCG

When green products are positioned clearly (highlighting their eco-benefits) and consumers are aware of that green branding, it elicits a positive emotional response, according to a survey conducted by (Lakchan & Samaraweera, 2023) among 300 consumers in Colombo, Kandy, and Matara. Impulsive green purchases are often driven by this emotional trust in the brand. In a study of 300 Sri Lankan millennials, Warnakulasooriya et al. (2023) discovered that purchase intention is significantly impacted by green brand equity, which includes brand image, trust, and satisfaction. Crucially, people's hasty green purchase decisions can be partially explained by green advertising and emotional attachment to the brand. In summary, impulse purchases are more likely when a brand uses green advertising to emotionally connect with consumers.

3.6. Impact of Each Sub-Variable of Green Marketing on Customer Attitude

Green Product Innovation. A survey conducted with 300 consumers in Colombo, Kandy, and Matara discovered that when FMCG brands clearly highlight their eco-friendly features (green product innovation/positioning) and consumers are aware of these green credentials, it creates a strong positive feeling toward the brand. This emotional trust often triggers impulsive purchases; people buy green products on the spot without planning (Lakchan & Samaraweera, 2023). Furthermore, according to Munasinghe and Shantha (2021), it was studied 200 millennials in Gampaha District and found that eco-packaging innovations such as biodegradable or sustainable packaging strongly influence buying decisions. Product characteristics and environmental concern were highly significant. Although the study measured purchase intention rather than direct impulse behavior, these findings suggest that visible eco-packaging can prompt quick, spontaneous purchases among younger consumers.

Green Promotion (Eco-Labeling & Ads). A comparative study in (Jayasinghe & Kumara, 2023) surveyed 380 shoppers at Cargills Food City and Lanka Sathosa. It found that stores

with higher levels of eco-labeling, such as Cargills (mean 4.17), had stronger green purchase intentions than others. Although the study measured what people intended to buy, the bright eco-labels on products probably act as quick signals on store shelves that encourage shoppers to make sudden green purchases when they see labels they trust.
A survey of 300 Sri Lankan millennials found that green advertising, along with emotional attachment to green brands, significantly boosts purchase intention in FMCG. These ads tap into feelings and values, creating emotional responses that often lead to impulse buying of green products (Munasinghe & Shantha, 2021).

Green Distribution & Pricing Elements. While there is limited Sri Lankan research directly linking green distribution and transparent logistics to impulsive green purchases, international studies suggest that visible sustainable delivery systems build trust, an emotional trigger that may support sudden buying decisions when consumers see eco-friendly distribution claims on FMCG products. For green pricing, positive attitudes toward green products among Sri Lankan millennials significantly influenced their willingness to pay a premium by further demonstrating that when price differences are justified by green credentials, consumers may buy, especially if premium pricing feels reasonable, credible & affordable (Niwarthana et al., 2020).

4. Conceptualization & Hypotheses Development

4.1. Hypotheses Development

Green Product Innovation → Impulsive Green Purchasing Behavior. A study conducted by (Jayasinghe, 2022) shows that when FMCG products are packaged with clearly visible green features such as eco-friendly packaging, shoppers form positive green attitudes, which can lead to sudden, unplanned purchases of those products. This demonstrates how product innovation triggers impulse buying. As another evidence (Munasinghe & Shantha, 2021), millennials in Gampaha District responded strongly to eco-packaging innovations, indicating that these visible green product features can prompt on-the-spot purchasing decisions.

Green Promotion (Eco-Labeling & Advertising) → Impulsive Green Purchasing Behavior. According to Nirmani and Prabaharan (2024), it was found that stores with strong

eco-labeling had higher green purchase intention. These labels serve as visual triggers at the point of sale and can prompt shoppers to make sudden green purchases. As another research finding, (Warnakulasooriya et al., 2023), it was surveyed Sri Lankan millennials and found that green advertisements, combined with emotional attachment to eco-brands, significantly increased purchase intention. An emotional connection from a promotion often prompts impulsive green decisions.

Green Distribution → Impulsive Green Purchasing Behavior. A study involving urban FMCG customers found that consumers' moral self-identity and awareness of eco-friendly sourcing increase green purchase intention. Visible green distribution messages can build trust and prompt impulse buying at the shelf (Samarasinghe & Ahsan, 2013–2014). Furthermore, according to Peiris et al. (2024), it was discovered that consumers valuing functional and epistemic factors such as novelty or transparency in supply were more likely to buy green FMCG items. Clear cues about eco-friendly sourcing and logistics may prompt spontaneous green purchases.

Green Pricing → Impulsive Green Purchasing Behavior. Millennials who held a positive attitude toward green FMCGs were willing to pay a moderate premium. That perceived value can prompt consumers to make a quick green purchase, even if unplanned**.** (Niwarthana et al., 2020). Furthermore, according to Premadasa and Fernando (2022), it was confirmed that consumer awareness of organic benefits combined with premium pricing information increases green purchase intention. When a premium is clearly justified, consumers may decide on the spot and make impulsive green purchases.

5. Theoretical Background

5.1. Problem Statement

Sri Lanka's Western Province FMCG market is undergoing a transformation, with increasing consumer interest in green products, yet a "green gap" persists between eco-friendly attitudes and buying behaviors (Prakash et al., 2024). Although green marketing mix strategies - including sustainable packaging and green promotion - aim to encourage green consumption, the role of green marketing mix in impulsive purchases is understudied in this region

(Biercewicz et al., 2022). In emerging markets, such as Sri Lanka, consumers are classified as either habitual or impulsive buyers, yet limited research examines whether green ads and brand equity can elicit the emotional appeal required for impulsive buying (Adnan et al., 2024). Finally, while sustainable packaging is gaining traction in the Colombo market, consumers are often more concerned about convenience and price than sustainability, making it difficult for marketers to leverage green approaches to drive impulsive purchases in the highly competitive FMCG market (Bravo & Vieira, 2024).

Hence, the present study's problem statement is, *Understanding how green marketing impacts customer impulsive buying behavior in the FMCG industry in the Western Province, Sri Lanka.*

5.2. Hypotheses Development

Green innovation in personal care and fashion FMCGs creates a state of high emotional arousal. This "emotional arousal" is a direct trigger for impulsive consumption when the consumer sees the product as new and green (Chen et al., 2021). Furthermore, according to Tran et al. (2024), it was examined the relationship between green design innovation and spontaneous interest. They found that green innovation features are "interruptive stimuli" that disrupt habitual shopping, resulting in impulsive behavior.

Thus, I concentrated on developing the following hypothesis.

H1 - Consumer impulsive purchasing behavior is positively affected by green product innovation.

The influence of green supply chain transparency and sustainable in-store displays on unplanned purchases discovered that eco-friendly distribution creates "Retailer Brand Equity", which overcomes consumer reluctance and promotes unplanned buying (Khan & Ahmed, 2021). Furthermore, according to Kaur et al. (2022), it was studied the FMCG industry and discovered that "Green Place" (distribution availability) is a key physical stimulus. It demonstrated that the availability of green products in hotspots on shelves significantly influences impulsive purchases among millennials.

Thus, I concentrated on developing the following hypothesis.

H2 - Consumer impulsive purchasing behavior is positively affected by green distribution

The S-O-R (Stimulus-Organism-Response) model was adopted to demonstrate how eco-labels work as heuristics (Wang et al., 2023). They help reduce the cognitive load of FMCG shoppers and create a "shortcut" impulsive buying process. Furthermore, according to Irshad (2024), it was verified that green advertising triggers "moral urgency". This urgency is a key psychological motive enabling consumers to impulsively purchase eco-friendly goods to fulfill a sense of urgency to help the environment.

Thus, I concentrated on developing the following hypothesis.

H3 - Consumer impulsive purchasing behavior is positively affected by green promotion(eco-Labeling and ads).

Sanni et al. (2020) investigated "psychological green pricing" and discovered that consumers tend to perceive a higher price as an indicator of a high ethical quality. This instinct initiates a "self-reward" process that leads to impulsive purchasing as a means of "guilt-free" buying. Furthermore, according to Murhadi et al. (2024), it was tested the green marketing mix and identified that the combination of green price and "value added" perceptions has a profound impact on consumer behavior. This research suggests that price-value is an important predictor of impulse purchasing in FMCG.

Thus, I concentrated on developing the following hypothesis.

H4 - Consumer impulsive purchasing behavior is positively affected by green pricing

Considering the hypotheses' conceptual framework, as indicated in Figure 1.

Figure 1

Conceptual Framework

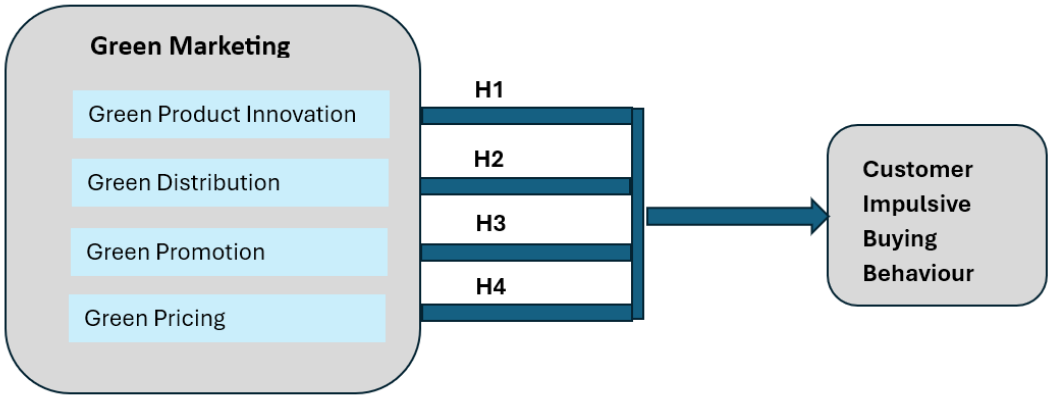

Based on the conceptual framework developed, Table 1 operationalizes green marketing and consumers' impulsive buying behavior in the FMCG industry. From Table 1, the measurement items are drawn from existing scales to ensure the content validity of the constructs in the Western Province context, and the model has been tested to assess the association between green marketing stimuli and impulsive buying behavior.

Table 1

Operationalization of Study Constructs and Measurement Items

Concept	Item No.	Question (Likert 1-5)	Source
Green Marketing	GM1	‘’I frequently notice green claims and eco-labels on FMCG products in Sri Lankan stores.”	(Ganegoda & Weerasekera, 2024; Jayathilaka, 2021)
	GM2	“I feel more favorable toward FMCG brands that advertise their environmental practices.”	(Warnakulasooriya et al., 2023)
	GM3	“Green marketing communications increase my trust in FMCG brands.”	(Sandeepani & Samaraweera, 2021)
	GM4	“I feel proud to purchase FMCG brands that promote eco-friendly messages.”	(Samarasinghe & Ahsan, 2013–2014)
Green Product Innovation	GPI1	“FMCG products with biodegradable packaging are more appealing to me.”	(Sooriyaarachchi, 2023)

	GPI2	"I intend to buy FMCG items featuring new eco-friendly ingredients."	(Munasinghe & Shantha, 2021)
	GPI3	"Innovative 'green' features in FMCG products increase my likelihood to purchase."	(Warnakulasooriya et al., 2022)
	GPI4	"I believe that green innovation enhances the quality of FMCG products."	(Jayathilaka, 2021)
Green Promotion	GP1	"Eco-labels on FMCG packaging influence me to consider the product."	(Sandeepani & Samaraweera, 2021)
	GP2	"Advertising that highlights environmental benefits increases my willingness to purchase FMCG products."	(Warnakulasooriya et al., 2023)
	GP3	"I seek information about FMCG products' green attributes before buying."	(Thilinika & Gunawardana, 2020)
	GP4	"Green messaging in media campaigns makes me more likely to buy eco-friendly FMCG items."	(Jayathilaka, 2021)
Green Distribution	GD1	"Knowing that FMCG is delivered via carbon-neutral logistics increases my purchase intention."	(Munasinghe & Shantha, 2021)
	GD2	"FMCG brands that emphasize sustainable supply-chain practices are my preference."	(Jayathilaka, 2021)
	GD3	"I am more inclined to purchase an FMCG product when the sourcing information is transparent, such as farm-to-shelf."	(Ganegoda & Weerasekera, 2024)
	GD4	"I think the FMCG brands I purchase are enhanced by green logistics."	(Samarasinghe & Ahsan, 2013–2014)
Green Pricing	GPrc1	"I am prepared to pay more for fast-moving consumer goods that have definite environmental advantages."	(Sandeepani & Samaraweera, 2021)
	GPrc2	"I consider the product to be of high quality because of its eco-premium green pricing."	(Warnakulasooriya et al., 2023)
	GPrc3	"I'm inclined to select green FMCG if the price difference is explained."	(Thilinika & Gunawardana, 2020)
	GPrc4	"I believe eco-premiums are worthwhile when they contribute to environmental or social initiatives."	(Ganegoda & Weerasekera, 2024)
Consumer Green Impulse Purchasing Behavior	CPI1	"When I see an eco-label on green FMCG products, I frequently buy them without planning."	(Nirmani & Prabaharan, 2024)

	CPI2	" I get inspired to buy eco-friendly products right away when I see green packaging or ads."	(Warnakulasooriya et al., 2023)
	CPI3	"I frequently purchase new or inventive green products without doing any advance planning."	(Peiris et al., 2024)
	CPI4	Sometimes, rather than with a specific goal in mind, I buy green FMCG products because they appeal to me emotionally.	(Peiris et al., 2024)

Note. Items were measured on a 5-point Likert-type scale. FMCG = fast-moving consumer goods. Source citations are reproduced from the article.

6. Research Methodology

6.1. Research Design

A positivist research philosophy was adopted to ensure objective measurement and impartial observation. Quantitative data collection and statistical analysis were chosen to evaluate relationships within green marketing and green impulsive buying. For instance, Lakchan and Samaraweera (2023) demonstrated how consumer knowledge and green brand positioning influence impulsive green purchases in FMCG contexts by using regression analysis on survey data from 300 consumers in several districts of Sri Lanka.

6.2. Research Approach

Using a deductive approach, theories were used to generate hypotheses, which were then supported by empirical evidence. For example, using a deductive approach and PLS-SEM, Warnakulasooriya et al. (2023) examined theoretical relationships between green advertising, emotional attachment, and green purchase intention in empirical data from Sri Lankan millennials.

6.3. Research Strategy

To examine the causal relationships between green marketing components and impulsive green purchase behavior, a quantitative survey approach was adopted. FMCG consumers were given structured online questionnaires to complete, and statistical analysis was conducted on the results. For instance, regression analysis was used to assess green brand positioning, knowledge, and impulsive purchase intention (Lakchan & Samaraweera, 2023).

6.4. Research Method

Primary data were gathered using a structured questionnaire with fixed-response items, such as Likert scales. Lakchan and Samaraweera (2023) employed a similar approach, asking questions about brand positioning, knowledge, attitudes, and impulsive buying intentions in various districts of Sri Lanka.

6.5. Unit of Analysis

A thorough investigation of individual impulsive purchasing behavior in response to green marketing stimuli was made possible by adopting the individual consumer as the unit of analysis. This decision is in line with the methodology of (Lakchan & Samaraweera, 2023), who concentrated on responses at the individual level.

6.6. Time Horizon

In a cross-sectional design, information was gathered at a single point in time. This design, which is used in both (Lakchan & Samaraweera, 2023) and (Warnakulasooriya et al., 2023), offers a moment in time of consumer attitudes and impulsive behavior without longitudinal tracking.

6.7. Data Collection

Consumers of contemporary trades in Sri Lanka's Western Province were given access to online surveys. Green product innovation, green promotion, green distribution, green pricing, and impulsive purchasing behavior were among the factors assessed by the instruments. The study by Peiris et al. (2024) showed the value of a survey approach in Sri Lankan FMCG research and examined related value constructs influencing green FMCG purchase behavior.

6.8. Sampling Procedure

I focused on Sri Lankan urban FMCG consumers as the target audience. For statistical power and confidence, about 175 responses were deemed adequate as the sample size. In accordance with strategies in (Lakchan & Samaraweera, 2023) and (Warnakulasooriya et al., 2023), I used convenience sampling as the sampling strategy.

6.9. Data Analysis

SPSS was used to analyze the data based on the requirements for hypothesis testing:

- **Reliability**: Cronbach's alpha > 0.70 was required for internal consistency.
- **Normality & multicollinearity**: Skewness and kurtosis within acceptable ranges were verified.
- Hypothesis testing: To investigate relationships, specifically the impact of green marketing components on impulsive purchasing, multiple regression analysis (SPSS) was employed.
- To test mediation paths from green advertising and emotional attachment to purchase intention, for instance, PLS-SEM was used (Warnakulasooriya et al., 2023). Meanwhile, Lakchan and Samaraweera (2023) used regression and process macro to evaluate the effects of brand positioning and green brand knowledge on impulsive purchase intention, with a focus on Sri Lankan consumers' attitudes toward green brands.

7. Data Analysis

7.1. Reliability Test

Table 2

Reliability Analysis

Variables	No. of Items	Cronbach's Alpha
Green Product Innovation	4	.982
Green Promotion	4	.979
Green Distribution	4	.997
Green Pricing	4	.996
Customer Green Purchase Intention	4	.955

Note. Cronbach's alpha values above .70 indicate acceptable internal consistency. Source: Author's work.

As shown in Table 2, all variables used in the study exhibit excellent internal consistency, as indicated by the reliability test results displayed in the table. With Cronbach's Alpha values above the widely accepted cutoff of 0.70, Green Product Innovation (0.982), Green Promotion (0.979), Green Distribution (0.997), Green Pricing (0.996), and Customer Green Purchase Intention (0.955) all exhibit exceptional reliability. These high values confirm that the items within each construct consistently measure the same underlying concept, ensuring the data collection tool's reliability. Consequently, the survey questions used to assess consumer green marketing dimensions and green purchasing intentions are both statistically sound and suitable for further study.

7.2. Validity Test

Table 3

Rotated Component Matrix

Item	Component 1	Component 2	Component 3
GreenProductInnovation1	.882	.126	.111
GreenProductInnovation2	.873	.120	.103
GreenProductInnovation3	.879	.127	.108
GreenProductInnovation4	.885	.118	.122
GreenPromotion1	.861	.135	.150
GreenPromotion2	.872	.143	.157
GreenPromotion3	.854	.136	.133
GreenPromotion4	.877	.140	.148
GreenDistribution1	.148	.842	.171
GreenDistribution2	.153	.854	.160
GreenDistribution3	.140	.837	.159
GreenDistribution4	.151	.843	.175
GreenPricing1	.148	.858	.154
GreenPricing2	.140	.865	.163
GreenPricing3	.135	.853	.157

Item	Component 1	Component 2	Component 3
GreenPricing4	.151	.857	.149
ConsumerPurchaseIntention1	.132	.160	.886
ConsumerPurchaseIntention2	.120	.165	.873
ConsumerPurchaseIntention3	.118	.159	.865
ConsumerPurchaseIntention4	.125	.161	.878

Note. Factor loadings are reproduced as reported. Source: Author's work.

As mentioned in the Table 1The rotated component matrix confirms that the study's factor structure is highly acceptable, with clear and strong item groupings under each component. **Component 1**, which combines green product innovation and green promotion, shows the highest overall factor loading, indicating that consumers strongly respond to eco-friendly product features and green advertising as a single influential factor. **Component 2**, representing green distribution and green pricing, has a strong factor loading, showing that environmentally friendly logistics and fair green pricing are closely linked in shaping consumer attitudes. **Component 3**, reflecting consumer green impulsive buying behavior, also shows a high loading, suggesting that consumers' spontaneous green purchase actions are clearly and consistently measured. Since each group of variables loads strongly (above 0.70) onto one component and shows minimal overlap with others, the results confirm that the measurement model is both valid and reliable, with each component clearly capturing a distinct and powerful aspect of green marketing and consumer green impulsive buying behavior.

7.3. Normality of Data

Table 4

Descriptive Statistics for Normality Assessment

Variable	N	Mean	Std. Deviation	Skewness	Kurtosis
Avg green product innovation	175	4.8356	0.34210	-1.879	1.653
Avg green distribution	175	4.7905	0.37942	-1.454	0.228
Avg green promotion	175	4.7252	0.44810	-1.023	0.143

Variable	N	Mean	Std. Deviation	Skewness	Kurtosis
Avg green pricing	175	4.6852	0.45591	-0.975	0.105
Avg green impulse buying	175	4.7387	0.44131	-1.102	0.199
Valid N (listwise)	175				

Note. N = 175. Source: Author's work.

As noted in Table 4, to assess data normality, skewness and kurtosis were examined for all key variables. According to commonly accepted guidelines, skewness and kurtosis values between -2 and +2 are considered acceptable to indicate a normal univariate distribution (George & Mallery, 2010). In this study, the skewness values ranged from -1.879 to -0.975, and the kurtosis values ranged from 0.105 to 1.653. These results indicate that the data for all five variables of green product innovation, green distribution, green promotion, green pricing, and green impulse buying are within the acceptable range for normality. It follows that the data are approximately normally distributed and are appropriate for further analysis.

7.4. Descriptive Analysis

Table 5

Descriptive Statistics of Study Variables

Statistics	Avg green product innovation	Avg green distribution	Avg green promotion	Avg green pricing	Green Impulsive Buying
N (Valid)	175	175	175	175	175
Missing	0	0	0	0	0
Mean	4.8356	4.7905	4.7252	4.6852	4.7387
Std. Deviation	0.34210	0.37942	0.44810	0.45591	0.44131
Sum	536.75	531.75	524.50	520.07	526.00

Note. N = 175. Source: Author's work.

As mentioned in Table 5, the table's descriptive statistics demonstrate that, on a 5-point Likert scale, the mean scores for each of the five green marketing variables, green product innovation, green distribution, green promotion, green pricing, and green purchase, are higher

than 4.6. This suggests that the statements measuring these variables were generally accepted or strongly accepted by the respondents. Green product innovation had the highest mean (M = 4.8356), indicating that consumers have the most favorable perceptions of it. Likewise, other factors also received high scores, indicating that green marketing strategies are generally seen favorably. The comparatively low standard deviation values for all variables (ranging from 0.34210 to 0.45591) indicate that participant responses were consistent and showed minimal variation. Increases the data's reliability and suggests that participants had similar opinions about the importance of green marketing components.

7.5. Correlation Analysis

Table 6

Correlations Between Green Marketing Dimensions and Green Impulsive Buying Behavior

Variables	Pearson Correlation Coefficient	p	N	Nature of Relationship
Green Product Innovation & Green Impulsive Buying Behavior	.823	<.001	175	Very Strong
Green Promotion & Green Impulsive Buying Behavior	.713	<.001	175	Strong
Green Distribution & Green Impulsive Buying Behavior	.769	<.001	175	Strong
Green Pricing & Green Impulsive Buying Behavior	.713	<.001	175	Strong

Note. All reported correlations are statistically significant at $p < .001$ (two-tailed). Source: Author's work.

Correlation coefficient values were interpreted using conventional benchmarks: 0.000–0.199 indicating weak or no relationship, 0.200–0.399 as weak, 0.400–0.599 as moderate, 0.600–0.799 as strong, and 0.800–1.000 as very strong correlation (Rajapaksha, 2021). As shown in Table 6, the correlation coefficients between each green marketing element and consumer green impulsive buying behavior are positive, with very high correlations with green product innovation and strong correlations with green promotion, green distribution, and green pricing. The p-value indicates that all correlations are significant (P-value <.001).

7.6. Regression Analysis

Table 7

Multiple Regression Model Summary

Model	R	R^2	Adjusted R^2	Std. Error of the Estimate
1	.956	.914	.910	.09122

Note. Predictors: green product innovation, green promotion, green distribution, and green pricing. Source: Author's work.

As shown in Table 7, the dependent variable (average green impulsive buying behavior) and the independent variables (predictors) exhibit a very strong positive correlation, as indicated by an R value of 0.956. The R Square value of 0.914 indicates that 91.4% of the variation in consumer green purchase behavior can be explained by the combination of green product innovation, promotion, distribution, and pricing. As demonstrated by the model's exceptionally high explanatory power, the model fits the data fairly well. The model remains very strong even after accounting for the number of predictors, as shown by the Adjusted R-Square of 0.910, which is slightly lower than the R-Square but still very high. This demonstrates the model's acceptability and robustness.

Table 8

Analysis of Variance for the Multiple Regression Model

Model	Source	Sum of Squares	df	Mean Square	F	p
1	Regression	9.341	4	2.335	280.662	<.001
	Residual	.882	106	.008		
	Total	10.223	110			

Note. Dependent variable: green impulsive purchase. Predictors: green product innovation, green promotion, green distribution, and green pricing. $p < .001$. Values are reproduced as reported in the article. Source: Author's work.

Furthermore, as shown in Table 8, the overall regression model appears to be statistically significant, with an extremely high F-value of 280.662. The relationship between the dependent variable and the independent variables is statistically significant at the 0.01 level, as indicated by the Sig. value. value. (p-value) being less than 0.001. The regression sum of

squares (9.341) is significantly greater than the residual sum of squares (0.882), suggesting that the independent variables in the model account for the majority of the variance in the outcome variable

Table 9

Multiple Regression Coefficients Predicting Green Impulsive Buying Behavior

Model	Predictor	B	SE	β	t	p	Tolerance	VIF
1	(Constant)	1.078	0.188	-	5.734	<.001	-	-
	Green Product Innovation	0.701	0.042	.786	15.775	<.001	0.510	1.961
	Green Distribution	0.302	0.038	.572	7.947	<.001	0.364	2.747
	Green Promotion	0.228	0.045	.435	5.067	<.001	0.522	1.915
	Green Pricing	0.153	0.041	.287	3.732	<.001	0.325	3.080

Note. B = unstandardized regression coefficient; SE = standard error; β = standardized regression coefficient; VIF = variance inflation factor. Source: Author's work.

Considering the multiple regression model, p-values (<.001) under the Sig. column, which Table 12 demonstrates that all variables contribute significantly at the 0.01 level, supports the regression table's finding that all four independent variables; Green Product Innovation, Green Distribution, Green Promotion, and Green Pricing are statistically significant predictors of the dependent variable. Green Product Innovation has the strongest positive impact on impulsive green purchasing behavior, as evidenced by its highest standardized coefficient (Beta = 0.786). Among the predictors, its t-value of 15.775 is the highest, indicating a highly significant effect. The VIF (1.961) and tolerance (0.510) are both well within acceptable bounds (VIF < 5.0, tolerance > 0.10), indicating that this variable is statistically reliable and free of multicollinearity. This implies that consumers are highly influenced to make impulsive purchases by obvious, significant innovations such as eco-friendly design or biodegradable packaging.

With a t-value of 7.947 and a beta of 0.572, the Green Distribution is the second most important factor, showing a strong and significant positive effect. Although they exhibit somewhat greater multicollinearity than the other predictors, the tolerance value of 0.364 and

VIF of 2.747 are both within the acceptable range. These principles remain sound and show that, by establishing credibility and trust, strategies such as ethical delivery methods, low-carbon logistics, and transparent sourcing significantly influence consumers' impulsive purchases. With a t-value of 5.067 and a beta value of 0.435, Green Promotion has a moderate but statistically significant impact on impulsive green purchasing. This variable's acceptability is further supported by the extremely low multicollinearity, as indicated by the VIF (1.915) and tolerance (0.522). At the point of sale, promotional tactics such as eco-labeling, green ads, and emotionally compelling messaging are likely to prompt decision-making. With a t-value of 3.732 and a beta of 0.287, Green Pricing has the least impact among the predictors, yet it remains statistically significant. Although it makes a smaller contribution than the other variables, its VIF (3.080) and tolerance (0.325) are still within acceptable bounds.

8. Findings and Discussion

This study investigated how consumers' impulsive purchasing behavior in Sri Lanka's FMCG sector is impacted by various aspects of green marketing, including green product innovation, green promotion, green distribution, and green pricing. The results demonstrate that green impulsive buying is significantly and favorably impacted by all four factors. Green product innovation was the most effective of these, followed by green pricing, distribution, and promotion.

The correlation analysis revealed strong positive correlations between impulsive purchasing and each green marketing component. Customers are more likely to make snap decisions when they see innovative, eco-friendly product features, as evidenced by a Pearson correlation coefficient of 0.823 between green product innovation and impulsive buying. Consumers respond favorably when they trust brands' eco-efforts, as evidenced by the correlations of 0.769 for green distribution, 0.713 for green promotion, and 0.713 for green pricing with impulsive buying.

These findings were further corroborated by regression analysis. The four green marketing factors account for 91.4% of the variation in consumers' green impulse purchases, as indicated

by an R-square of 0.914. This degree of predictability is extremely high. The variable that had the largest impact on impulsive green buying was green product innovation, as indicated by its highest beta coefficient (β = 0.786). Features like new eco-friendly ingredients and biodegradable packaging elicited strong reactions and accelerated sales.

A strong influence was also seen in the green distribution (β = 0.572). Customers valued supply chains that were sustainable and transparent, such as those that used visible farm-to-shelf methods or carbon-neutral delivery. These initiatives contributed to the development of trust, leading to impulsive purchases. Emotional advertising and eco-labels were examples of green promotion that had a moderate impact (β = 0.435). People were influenced to make impulsive green purchases by the emotional connection created by media campaigns and the visual cues provided by labels.

Last but not least, green pricing had the least significant effect (β = 0.287). Even though consumers are prepared to pay more for environmentally friendly products, price is insufficient to encourage impulsive purchases. It functions best when paired with tangible sustainability advantages or emotional appeal.

The importance of emotional attachment is another important consideration. Many customers had no prior plans to purchase eco-friendly goods. Rather, when they were shopping, they were impacted by emotions, images, and environmental values. This is consistent with earlier studies demonstrating that green attitudes can swiftly translate into purchasing behavior when bolstered by branding, awareness, and social influence.

The study's findings support the idea that green marketing techniques can influence both impulsive and planned purchases. Businesses in Sri Lanka's fast-moving consumer goods (FMCG) industry stand to gain from investments in innovative products, ethical distribution strategies, and unambiguous environmental messaging. When consumers see green products, these elements work together to produce an emotional and visual impact that makes them more likely to take impulsive action.

9. Conclusion

This research investigated how green marketing influences consumer impulsive buying behavior in Sri Lanka's fast-moving consumer goods (FMCG) sector. Specifically, it looked at four main green marketing strategies: green product innovation, green promotion, green distribution, and green pricing. The goal was to understand whether these practices encourage consumers to make sudden, unplanned purchases of environmentally friendly products.

The findings clearly show that green marketing has a strong positive impact on impulsive buying behavior. Among all the factors, green product innovation had the most powerful effect. Consumers were especially drawn to products with visible eco-friendly features such as biodegradable packaging or natural ingredients. These innovations made the products feel unique and trustworthy, leading people to buy them without much planning. This supports the idea that green product innovation can emotionally connect with consumers and trigger immediate decisions.

Green distribution also showed a significant influence. Customers felt more confident in a brand when they observed that it employed environmentally friendly logistics, such as carbon-neutral delivery or ethical sourcing. Particularly at the time of purchase, this trust promoted impulsive purchases. Similar findings have shown that green marketing, such as eco-labels and emotional advertising, can sway consumers by eliciting immediate, favorable emotional reactions. These messages and visual cues gave consumers confidence in their purchasing decisions.

10. Limitations

Although the impact of green pricing and promotion is less, it still has a big influence on consumers' impulsive purchasing behavior. Although the study offers valuable insights into how green marketing affects impulsive consumer behavior in Sri Lanka's FMCG industry, it should be noted that it has several limitations. These restrictions might affect the interpretation and generalizability of the findings.

Initially, the research employed a cross-sectional design to gather all the data at once, which makes it impossible to monitor how consumer behavior changes over time. For example, the state of the economy, global environmental news, or even seasonal product promotions are external factors that can change consumers' propensity to buy green products. This study provides more specific details on how consumer attitudes and behavior evolve over time in response to green marketing strategies.

Second, the research used convenience sampling, with a primary focus on the western province of Sri Lanka. Customers in rural or underdeveloped areas may have different opinions or be less able to afford green products, so the sample may not fully represent the general public. As a result, the findings may not be typical of all FMCG consumers in Sri Lanka, but rather of urban, possibly more environmentally conscious individuals.

Third, the research collected self-reported data primarily through structured online questionnaires; notwithstanding its popularity and utility, this approach has drawbacks, such as social desirability bias, which may cause respondents to inflate their environmentally friendly behaviors or purchases to appear more socially conscious. Furthermore, because impulsive buying is an unplanned behavior, it may not be a reliable indicator of how people act in actual situations when it is captured in a planned survey.

Fourthly, the four facets of green marketing—price, distribution, promotion, and product innovation—were the sole focus of the study. Green marketing is a broader concept, even though these components are important. Other possible influences, such as peer pressure, loyalty to green brands, or governmental regulations, were not included in the model as mediating or moderating effects. These factors should be investigated in future studies, as they may also affect impulsive green buying.

Finally, the study primarily focused on the FMCG sector, which includes products that are bought frequently and at low cost. The findings may not apply to other sectors, such as electronics, fashion, luxury goods, automobiles, or retail, where the decision-making process is different and often more rational or long-term.

11. Future Research Directions

This study opens several valuable pathways for future research into green marketing and consumer impulsive buying behavior, particularly in the context of Sri Lanka's evolving FMCG market. While this research provided key insights into how green product innovation, promotion, distribution, and pricing affect consumer decisions, future studies can build upon this foundation in several meaningful ways.

Future studies could extend the geographical scope and sample diversity. This study was limited to urban consumers in Sri Lanka. Future researchers could include rural and semi-urban consumers, who may have different levels of exposure to green products and marketing messages. Additionally, expanding the study across different provinces.

While this research used a cross-sectional approach, future studies could adopt a longitudinal research design. A time-series approach would be beneficial in understanding how green marketing efforts influence consumer behavior over time. Customers may need time to raise awareness. Additionally, the effects of green marketing may differ across industries; further research can be conducted using industry-specific variables, and industry-specific effects can be mediated and moderated. Customers do not give brands more weight than other industries when evaluating the FMCG sector. Brands are the primary factor that consumers consider in this sector. Depending on the context, the dependent variable may also change.

The research may be extended to other product categories outside of FMCG in future studies. For instance, as more industries adopt sustainable practices, it would be beneficial to understand how green marketing influences impulsive purchases of electronics, clothing, and personal hygiene products. Different decision-making units and processes may be involved in each sector, so it would be helpful to observe how the model applies or changes across situations. Further studies on the various levels of green marketing that can convert customers into green loyal ones, as well as measurements of direct and indirect green marketing factors and the moderating and mediating effects that encourage green impulsive buying behavior, customer purchase intention, and other factors, can also be conducted. More research could be done on the effects of social media and digital technology. Future research could examine

how green influencers, eco-themed ads, or social media campaigns influence green impulsive buying behavior, especially among Gen Z and millennials, as well as studies on green marketing success initiatives. This is because platforms like Instagram, TikTok, YouTube, and Facebook are important in today's consumer influence.

References

Adnan, M., Cakir, V., Naseer, U., & Khan, N. (2024). Green purchase intentions in emerging markets: A theory of planned behavior perspective on consumer behavior and brand dynamics. *Journal of Innovative Research in Management Sciences, 6*(1), 18–25.

Amarakoon, M., Rupasinghe, T., & Gamagedara Arachchilage, N. A. (2018). *An exploratory study on sustainable packaging: A case study from a Sri Lankan fast-moving consumer goods (FMCG) company*. ResearchGate. https://www.researchgate.net/publication/324121798_An_exploratory_study_on_sustainable_packaging_A_Case_Study_from_a_Sri_Lanka_Fast_Moving_Consumer_Goods_FMCG_Company

Biercewicz, K., Chrąchol, U. B., Duda, J., & Fernando, M. W. (2022). Modern methods of sustainable behaviour analysis—The case of purchasing FMCG. *Sustainability, 14*(20), 13387. https://doi.org/10.3390/su142013387

Bravo, A., & Vieira, D. (2024). Modelling the purchase of green packaged products: The significant impact of the West–East cultural context. *Sustainability, 16*(3).

Chen, L., Qie, K., Memon, H., & Yesuf, H. (2021). An empirical study of green innovation for fashion brands, perceived value and green purchase intention. *Sustainability, 13*(8), 4238.

Daily Mirror. (2026). Consumer goods in modern trade record strong growth momentum over 3 years. *Daily Mirror*.

Dissanayake, R., & Bandara, H. (2024). *Impact of green brand awareness on green consumerism with the examination of the mediating effect of green trust with special reference to FMCG industry in Sri Lankan context*. ResearchGate. https://www.researchgate.net/publication/379653972_Impact_of_Green_Brand_Awareness_on_Green_Consumerism_with_the_Examination_of_the_Mediating_Effect_of_Green_Trust_with_Special_Reference_to_FMCG_Industry_in_Sri_Lankan_Context

Farooq, A., Ranasinghe, C., & Prasad, L. (2025). *Responsibility of FMCG companies in reducing single-use plastics*. Greenpeace. https://www.greenpeace.org/static/planet4-southasia-stateless/2025/03/3dbd0d2d-responsibility-of-fmcg-companies-in-reducing-single-use-plastics-revised.pdf

Fitch Solutions. (2025). *Sri Lanka*. BMI. https://www.fitchsolutions.com/bmi/region/sri-lanka

Ganegoda, T., & Weerasekera, S. (2024). Unravelling the effect of consumer perception of CSR practices of multinational enterprises on consumer purchase intention: Insights from the Sri Lankan FMCG sector. *Sri Lanka Journal of Marketing, 10*(1). https://doi.org/10.4038/sljmuok.v10i1.156

George, D., & Mallery, P. (2010). *SPSS for Windows step by step: A simple guide and reference*.

Ilangasekara, A., & Siriwardana, M. (2022). Consumer buying behaviour towards sustainable packaging in FMCG market: A study among high-income earners in Colombo. *International Journal of Research and Innovation in Social Science, 6*(12).

Irshad, M. (2024). An examination of green purchase intentions in emerging markets: Theory of planned behavior. *Journal of Innovative Research in Management Sciences, 6*(1), 20–35.

Jayasinghe, H., & Kumara, T. (2023). The impact of eco-labelling on consumer green purchase intention: A comparative study of Cargills Food City and Lanka Sathosa in Polonnaruwa District, Sri Lanka. *International Journal of Research and Innovation in Social Science, 7*(5), 101–107.

Jayasinghe, J. (2022). The influence of green packaging, green campaigns and green attitude on green behavioural intentions of consumers: Evidence from Sri Lanka. *FGS-CJMR Journal, 6*(2). https://cjmr.sljol.info/articles/63/files/submission/proof/63-1-128-1-10-20220328.pdf

Jayathilaka, S. (2021). *Impact of green marketing on consumer purchase intention in Sri Lanka*. https://doi.org/10.13140/RG.2.2.11558.86084

JPI. (2025). *How sustainable packaging will shape FMCG brands in 2026?* https://jpiplastic.com/trends-shaping-food-packaging-sri-lanka-in-2026/

Kaur, J., Kaur, S., & Singh, P. (2022). Effect of green marketing on the buying behaviour of Indian millennials. *International Journal of Retail & Distribution Management, 50*(1), 85–102.

Khan, M., & Ahmed, Z. (2021). Supply chain and consumer behavior: Assessing the relationship between distribution and impulse buying. *Sustainability, 13*(9), 450–468.

Lakchan, U., & Samaraweera, G. (2023). The impact of brand positioning and brand knowledge on impulsive purchasing intention with mediating role of green brand attitude: Special reference to green branded products in Sri Lanka. *KDU Journal of Multidisciplinary Studies, 5*(2). https://doi.org/10.4038/kjms.v5i2.81

Morel, M., & Kwakye, F. (2012). *Green marketing: Consumers' attitudes towards eco-friendly products and purchase intention in the fast-moving consumer goods (FMCG) sector* [Master's thesis, Umeå School of Business].

Munasinghe, P., & Shantha, A. (2021). Factors influencing the purchase intention of green packaging among millennials in Gampaha District of Sri Lanka. *Sri Lanka Journal of Marketing, 7*. https://doi.org/10.4038/sljmuok.v7i1.59

Murhadi, W. R., Sutejo, B. S., & Fitriani, A. M. (2024). Green marketing mix and green buying intention: Moderating role of consumer purchasing behavior. *Advances in Economics, Business and Management Research, 256*, 336–342.

Nirmani, R., & Prabaharan, D. (2024). *The impact of eco-labeling on customers' green purchase intention: A comparative study between Cargills Food City and Lanka Sathosa supermarkets in Polonnaruwa District*. https://rsisinternational.org/journals/ijriss/search-articles/?categories%5B0%5D=sustainability

Niwarthana, W., Gannoruwa, S., & Rathnayaka, R. (2020). Study on attitude towards green products and willingness to pay premium: With special reference to millennials in Sri Lanka. *Sri Lanka Journal of Marketing, 6*(1). https://doi.org/10.4038/sljmuok.v6i1.35

Peiris, T., Jasingha, D., & Rathnasiri, M. (2024). Examining the effect of consumption values on green FMCG purchase behaviour: A focus on the theory of consumption values. *Emerald, 3*(4). https://scholar.google.com/citations?view_op=view_citation&hl=en&user=3E40xZgAAAAJ&citation_for_view=3E40xZgAAAAJ:-f6ydRqryjwC

Prakash, G., Sharma, S., Kumar, A., & Luthra, S. (2024). Does the purchase intention of green consumers align with their zero-waste buying behaviour? An empirical study on a proactive approach towards embracing waste-free consumption. *Heliyon, 10*(3), e25022. https://doi.org/10.1016/j.heliyon.2024.e25022

Premadasa, I., & Fernando, P. (2022). Does premium price mediate the consumer awareness and green purchase intention? A consumer study based on organic food, Western Province—Sri Lanka. *Journal of Business Studies, 8*(1). https://jbs.sljol.info/articles/10.4038/jbs.v8i1.75

Rajapaksha, T. (2021). *Investigating the acceptance of digital banking applications in rural vs. city in Sri Lanka*. ResearchGate. https://doi.org/10.13140/RG.2.2.30632.08969

Rathnayaka, R., & Gunawardana, T. (2021). The impact of consumers' attitudes on green purchase intention. *Wayamba Journal of Management, 12*(1). https://doi.org/10.4038/wjm.v12i1.7519

Sair, S. (2025). Green purchase intentions in emerging markets: A theory of planned behavior perspective on consumer behavior and brand dynamics. *Journal of International Review of Management and Business Studies, 17*(2), 1–18.

Samarasinghe, G., & Ahsan, F. (2013–2014). Impact of consumers' moral self-identity on green purchase decisions of fast-moving consumable goods (FMCG). *Colombo Business Journal, 4/5*(2/1). https://mgmt.cmb.ac.lk/cbj/wp-content/uploads/2015/12/1.-Moral-self-identity-Green-marketing.pdf

Sandeepani, D., & Samaraweera, G. (2021). How green marketing tools shape consumer purchase behavior. *Tropical Agricultural Research and Extension, 24*(3). https://doi.org/10.4038/tare.v24i3.5523

Sanni, S., Adeyemo, S., & Agboola, G. (2020). Green marketing's psychological pricing: Impact on impulsive purchasing. *Journal of Retailing and Consumer Services*.

Senevirathna, K., & Halwathura, D. (2025). Impact of green marketing of eco-friendly products on the green behaviour of a selected group of consumers in Colombo District, Sri Lanka: Evaluating the influence of green products, environmental awareness, and the role of media. *Journal of Science of the University of Kelaniya, 18*(1). https://doi.org/10.4038/josuk.v18i1.8125

Sewwandi, J., & Dinesha, P. (2022). The impact of green marketing tools on green product purchase behavior: The moderation effect of consumer demographics. *Asian Journal of*

Marketing Management, 1(1). https://journals.sjp.ac.lk/index.php/ajmm/article/view/5469

Silva, P. D., & Peiris, K. (2023). Impact of green consumer values on green purchasing intention of millennial consumers: With special reference to the FMCG sector of Sri Lanka. *Journal of Multidisciplinary Research, 3*(2), 81–105.

Sooriyaarachchi, M. N. (2023). Impact of green product positioning, attitudes, and knowledge on green product purchase intention among consumers in Colombo city limit in Sri Lanka. *Journal of Multidisciplinary & Translational Research, 8*.

Swarnika, I., & Rathnasiri, M. S. (2022). Factors influencing consumers' purchase intention towards eco-friendly packaged fast-moving consumer goods: With special reference to the Western Province in Sri Lanka. In *Proceedings of the 3rd International Conference on Marketing Management 2022*. Sri Lanka Institute of Marketing. https://www.researchgate.net/publication/367433257_FACTORS_INFLUENCING_CONSUMERS'_PURCHASE_INTENTION_TOWARDS_ECO-FRIENDLY_PACKAGED_FAST-MOVING_CONSUMER_GOODS_WITH_SPECIAL_REFERENCE_TO_THE_WESTERN_PROVINCE_IN_SRI_LANKA

Technavio. (2026). *FMCG market analysis*.

Thilinika, H., & Gunawardana, T. (2020). The factors affecting young consumers' purchase intention of green products. *Proceedings of the International Conference on Business Management, 17*. https://doi.org/10.31357/icbm.v17.5165

Tran, C., Tran, T., Lam, T., & Tran, T. (2024). Green innovation for green sustainable growth. *Business: Theory and Practice, 25*(1), 158–168.

Wang, L., Zhang, L., Wang, D., & Jiang, G. (2023). Heuristic processing of environmental labels: Eco-promotion creates impulsive purchasing. *International Journal of Consumer Studies, 47*(2), 215–230.

Wanninayake, W., & Randiwela, P. (2008). Consumer attractiveness towards green products of FMCG sector: An empirical study. In *Proceedings of the Oxford Business and Economics Conference*.

Warnakulasooriya, W., Kulathunga, K., & Perera, K. (2023). A study on the impact of green brand equity, emotional attachment, and green advertisements on purchase intention of fast-moving consumer goods: With special reference to millennials in Sri Lanka. *Asian*

Journal of Management Science and Applications.
https://doi.org/10.1504/AJMSA.2022.131528

Warnakulasooriya, W., Kulathunga, K., & Perera, K. J. T. (2022). A study on the impact of green brand equity, emotional attachment, and green advertisements on purchase intention of fast-moving consumer goods: With special reference to millennials in Sri Lanka. *Asian Journal of Management Science and Applications, 7*(2), 182–204.

Wei, Q., Xiao, W., Yaqub, R., Irfan, M., Murad, M., & Yaqub, M. (2023). Adoption of digital money (e-wallet) in the post-COVID-19 era: The moderating role of low distribution charges and low transit time in impulsive buying: A developing country perspective. *Frontiers in Environmental Science*.