TOWN OF WHEATON
CHAPTER 11
SUBDIVISION CONTROL ORDINANCE

GENERAL PROVISIONS

11.01 AUTHORITY
These regulations are adopted under the authority granted by Section 236.45 of the Wis. State Stats. Therefore, the Town Board of Supervisors of the Town of Wheaton, County of Chippewa, Wisconsin, do ordain as follows:

11.02 TITLE
The name of this ordinance shall be known and cited as the "Subdivision Control Ordinance for the Town of Wheaton."

11.03 EFFECTIVE DATE
This ordinance shall be effective after adoption by the Town of Wheaton Town Board of Supervisors and publication or posting as provided by law. Amendments hereto shall be made only after notice and public hearing.

11.04 PURPOSE
The purpose of this ordinance is to supplement the provisions of Chapter 236 of Wis. State Stats. and to promote the public health, safety and general welfare within the Town of Wheaton to lessen congestion in the streets and highways; to further the orderly layout and use of land; to secure safety from fire, panic and other dangers; to provide adequate light and air; to prevent the overcrowding of land; to avoid undue concentration of population; to facilitate adequate provision for transportation, water, sewerage, schools, parks, playgrounds and other public requirements; and to facilitate the further resubdivision of larger tracts into smaller parcels of land. The provisions of this ordinance are made with reasonable consideration, among other things, of the character of the Town with a view of conserving the value of the buildings placed upon the land providing the best possible environment for human habitation and encouraging the most appropriate use of land throughout the Town.

11.05 INTERPRETATION
The provisions of this ordinance shall be liberally construed in favor of the Town and shall not be deemed a limitation or repeal of any other power granted by the Wisconsin State Statutes.

11.06 ABROGATION AND GREATER RESTRICTIONS
It is not the intent of this ordinance to repeal, abrogate, annul, impair or interfere with existing rules and regulations governing the subdivision of land; provided, however, that where this ordinance is more restrictive, the provisions of this ordinance shall govern.

11.07 JURISDICTION
The jurisdiction of this ordinance shall include all lands and waters within the Town of Wheaton. Exceptions: In no instance shall the provisions of this ordinance apply to:

1. Transfer of interest in land by Will or pursuant to Court order
2. Leases for a term not to exceed ten years, mortgages, or easements
3. The sale or exchange of parcels of land between owners of adjoining property if additional lots are not thereby created and the lots resulting are not reduced below the minimum size required by this ordinance or other applicable laws or ordinances.

11.08 COMPLIANCE

No person, firm or corporation shall divide any land located within the jurisdictional limits of these regulations which results in a subdivision, other division, or a replat as defined herein; no such division, other division, or replat shall be entitled to record; and no streets shall be laid out or improvements made to land without compliance with all requirements of this ordinance, and:

1. Provisions of Chapter 236, Wis. State Stats
2. Rules of the Wisconsin State Division of Health, Department of Health and Social Services, regulating lot size and lot elevation if the land to be subdivided is not served by a public sewer and provisions for such service have not been made
3. Rules of the State Department of Transportation relating to safety of access and the preservation of the public interest and investment in the highway system if the land owned or controlled by the subdivider abuts on a state trunk highway or connecting street
4. Duly approved Comprehensive Plan, or any component thereof including the zoning ordinance, official map, and all other applicable ordinances of the Town of Wheaton
5. Applicable local and county ordinances

11.09 LAND SUITABILITY

1. No land shall be subdivided which is held unsuitable for use by the Town Plan Commission for reason of flooding, inadequate drainage, adverse soil or rock formation, unfavorable topography, inadequate water supply or sewerage disposal capabilities, or any feature likely to be harmful to the health, safety, or welfare of the future users of the proposed subdivision or of the community. The Town Plan Commission, in applying the provisions of this section, shall recite the particular facts upon which it bases its conclusions that the land is not suitable for the proposed use and afford the subdivider an opportunity to present evidence regarding such unsuitability if he so desires. Thereafter the Town Plan Commission may affirm, modify, or withdraw its determination of unsuitability.
2. Where the subdivision of a tract of land contains a portion of land unsuitable for development because of poor drainage, floodable conditions, poor soil conditions, adverse rock formation, unfavorable topography, inadequate water supply or sewerage disposal capabilities, or for any other reason, such areas shall not be divided into buildable sites, and shall be handled as follows:
    1. Poor Drainage. Land subject to ponding, poor permeability, or poor drainage, or for other causes as determined by the Plan Commission, or its designated agent, and if said land is not zoned as a conservancy or wetland-floodplain district on an applicable zoning district map, in which buildings are prohibited, it shall be subject to the following requirements:
        i. If said land is designated as park, parkway, other open-space, or other public use on an official plan of the Town of Wheaton, the developer may dedicate said land to the Town or County, but in any case, must reserve said land for not less than two (2) years for acquisition by the Town or County.
        ii. If said land is not designated as a park, parkway, or other public use on an official plan, then the developer shall cause said land to be carried in a private easement in the individual deeds affected thereby, and no permit shall be issued for a building therein.
        iii. In lieu of the requirements set forth in Section 11.09, paragraph (a) above, the developer may, at his expense, prepare a development proposal for the problem area. It shall be submitted for the Plan Commission's approval and shall be accompanied by a site plan and adequate Boarding date to ensure that the public health, safety and welfare will not be violated if approved, and to provide a surety bond to the approving municipality to ensure that such will be done at a specified time if approved.

2. Floodable Conditions/Drainage Ways. If floodplains have been determined and are delineated on an applicable zoning district map, or as determined by the Plan Commission from sources available to it, the subject platting shall be designated accordingly so that all building sites have sufficient area for the efficient operation of a private disposal system and so that the lowest floor level of a building shall be two (2) feet above the normal high-water line.
    a. In designing plats, drainage easements shall be shown on the plan where conditions warrant and as determined by the Plan Commission or as determined by sources available to it and building permits shall not be issued herein.
3. Adverse Soil and Rock Formation. Soil suitability rating for a proposed subdivision shall be determined by the Plan Commission from sources available to it. The Commission shall determine the minimum lot size required if public sewer is not available even though the minimum lot size allowed under the zoning is less than the soil rating might require. In order to determine the precise location of soil boundaries, on-site investigation by soil scientists may be necessary but in areas where no public sewer is available, this investigation is mandatory and may be made by a professional surveyor, Board or soil scientist at the expense of the developer, and according to procedures established by the State Division of Health, Department of Health and Social Services.
4. Where soil interpretations determine that a tract of land is unsuitable for development under existing conditions, the developer may submit a proposal for development indicating how, through site and boarding design, the soil problems can be overcome. The proposal shall include a site plan and adequate Boarding data before approval of the development can be granted by the Plan Commission. If this plan is approved, the developer shall provide a surety bond to the approving municipality to ensure that such will be done at a specified time.

11.10 DEFINITIONS

For the purpose of these regulations, the following terms are defined. Words used in the present tense include the future, the singular number includes the plural number, and the plural number includes the singular number. The word "shall" is mandatory.

Alley: A special public way affording only secondary access to abutting properties
Arterial Street: A street used, or intended to be used, primarily for fast or heavy through traffic. Arterial streets shall include freeways and expressways as well as standard arterial streets, highways and parkways
Block: A parcel of land bounded on at least one side by a street and on the other sides by natural or man-made barrier
Building Site: A parcel of land occupied, or intended to be occupied, by a structure as permitted under applicable zoning regulations
Certified Survey Map: A map of a land split prepared in accordance with this ordinance and Chapter 236, Wis. State Stats.
Collector Street: A Street used, or intended to be used, to carry traffic from minor streets to the major system of arterial streets, including the principal entrance streets to residential developments
Community: A Town, municipality, or a group of adjacent Towns and/or Municipalities Having common social, economic or physical interests.
Comprehensive Plan: The extensively developed plan, also called a master plan, adopted by the Town Plan Commission and certified by the Town Board pursuant to Section 62.23 of the Wis. State Stats., including proposals for future land use, transportation, urban redevelopment, and public facilities. Devices for the implementation of these plans, such as zoning, official map, land division, and building line ordinances and capital improvement programs shall also be considered a part of the comprehensive plan
Cul-De-Sac Street: Minor Street closed at one end with a turn-around provided for vehicles
Extraterritorial Plat Approval Jurisdiction: The unincorporated area within one and one-half (1-1/2) miles of a fourth-class city or a village and within three (3) miles of all other cities
Frontage Street: A minor street auxiliary to and located on the side of an arterial street for control of access and

for service to the abutting development
Minor Street: A Street used, or intended to be used, primarily for access to abutting properties
Minor Subdivision: The division of land by the owner or subdivider resulting in the creation of two (2) parcels or building sites, any one of which is five (5) acres in size or the division of a block, lot or outlot within a recorded subdivision plat into not more than four (4) parcels or building sites without changing the exterior boundaries of said block, lot or outlot.
Municipality: An incorporated town, village, or city
Official Map: Is that map adopted pursuant to Section 62.23 of the Wis. State Stats. Which shows existing and proposed streets, highways, parkways, parks, and playgrounds
Plat: A map of a subdivision complete with all certificates and Boarding data per Chapter 236, Wis. State Stats.
Public Way: Any public road, street, highway, walkway, drainageway, or part thereof
Replat: The changing of the boundaries of a recorded subdivision plat or part thereof
Subdivider: Any person, firm or corporation, or any agent thereof, dividing or proposing to divide land resulting in a subdivision, minor subdivision or replat
Subdivision: The division of a lot, parcel, or tract of land by the owners thereof, or their agents, for the purpose of transfer of ownership or building development where the act of division creates three (3) or more parcels or building sites of at least five (5) acres each in area; or where the act of division creates three (3) or more parcels of building sites of at least five (5) acres each in area by successive division within a period of five (5) years; or where a road is created more than 150 feet long.

11.11 DEDICATIONS AND RESERVATIONS

1. Wherever a tract of land to be subdivided or divided by certified survey embraces all or any part of an arterial street, drainageway or other public way which has been designated in the comprehensive plan or component part thereof, or on an "official" map of the Town of Wheaton, or so designated on an "official" map of a contiguous municipality who exercises "extra-territorial" jurisdiction, said public way shall be made a part of the plat and dedicated or reserved or treated by the developer as determined by the Plan Commission, in the locations and dimensions indicated on such plan or map and as set forth in this ordinance.
2. Wherever a proposed playground, park, school site or other public land, other than streets or drainageways, designated in a comprehensive plan, component part thereof, or on an "official" map of the Town of Wheaton or so designated on an "official"" map of a contiguous municipality who exercises "extraterritorial" jurisdiction, is embraced, all or in part, in a tract of land to be subdivided, these proposed public lands shall be so designed as to be made an integral part of the plat and may be dedicated but in any part of the plat and may be dedicated but in any case, shall be reserved, for acquisition at undeveloped land costs, by the agency having Jurisdiction, for a period not to exceed two (2) years unless extended by mutual agreement.
3. Wherever a subdivision or certified survey map abuts a public use area such as a park, lake, stream, or any similar type of public recreational area, the subdivider, at the option of the Plan Commission, shall provide area with a public street so that there shall be adequate public access to the public use area as determined by the commission.
4. The dedication of land for public purposes such as parks, rights-of-way, school sites, easements, becomes effective at the time of approval and recording of the final plat.
5. On sites reserved for eventual public acquisition, no building development is permitted during the time of reservation. Land so reserved shall be shown on the plat of a subdivision or on a certified survey map of other divisions.

11.12 FEES

1. A $300.00 filing fee shall be paid at the time a preliminary plat is filed with the Town or in the case of no preliminary plat, at the time the final plat, or Certified Survey Map in lieu thereof, if filed with the Town.
2. An Administrative Escrow Account shall be established by the Town and a $5,000.00 deposit is required by the party seeking the subdivision. This administrative escrow shall be used to pay the Town Engineer, if one is appointed, or a subcontractor to act as Town Engineer to oversee road construction and other construction as required in this Ordinance. If the Administrative Escrow Account falls below $2,000 the Town will suspend all activities related to this account until such time that the account has been replenished to $5,000. a. [Amended 01/11/2022]
    a. This administrative escrow shall also be used to pay for legal fees incurred by the Town in relation to the legal services needed by the Town in administering the development of the proposed subdivision. This administrative escrow shall also be used to pay for other necessary and required fees incurred by the Town in administering the development of the proposed subdivision. When the Town of Wheaton deems the related construction complete, any remaining balance in the Administrative Escrow Account will be returned to the applicant. [Amended 01/11/2022]

11.13 VARIANCE AND APPEAL

1. Where the Plan Commission finds that extraordinary hardships may result from strict compliance with these regulations, due to physical features of the site or its location, it may vary the regulations so that substantial justice may be done and the public interest secured, provided that such variation will not have the effect of nullifying the intent and purpose of these regulations and any development plans of any other agency.
    a. In granting variances and modifications, the Plan Commission may require such conditions, as will in its judgment, secure substantially the objectives of the standards or requirements so varied or modified.
2. Amendments. The Town Board of Supervisors upon recommendation of the Plan Commission my amend, supplement or repeal any of these regulations after public notice and hearing.

11.14 SEVERABILITY

1. The provisions of this ordinance are severable, and if' for any reason, a clause, sentence, paragraph, section or other part of this ordinance should be decided by a court of competent jurisdiction to be invalid, such invalidity shall not affect other provisions which can be given effect without the invalid provisions.

11.15 VIOLATIONS AND PENALTIES

1. Any person who fails to comply with the provisions of this ordinance shall, upon conviction thereof, forfeit not less than $25.00 nor more than $200.00 plus the costs of prosecution for each violation and in default of payment of such forfeiture and costs shall be imprisoned in the county jail until payment thereof, but not exceeding 30 days. Each violation and each day a violation exists or continues shall constitute a separate offense. In addition, the remedies authorized by Sections 236.30, 236.31 and 236.32, Wis. State Stats., shall be available to the Town. [Amended 8/12/03]

PROCEDURES

11.16 SUBDIVISION

1. When it is proposed to divide land into three (3) or more parcels or building sites, any one of which must be at least five (5) acres in size; or where the act of division creates three (3) or more parcels or building sites of at least five (5) acres each in area by successive division within a period of five (5) years, or

where a public road is created more than 350 feet long, the subdivider shall subdivide in accordance with the following procedures:

a. The subdivider shall have an initial consultation with the Town Board before proceeding with platting procedures to obtain their advice and assistance and so that the subdivider is familiar with the necessary regulations and the following general factors:
a. The suitability of the site for development
b. The accessibility of the site
c. The availability of public facilities (sewer, schools, parks, water, etc.) and public services (police, fire, etc.)
d. Soil conditions and drainage pattern
e. The effect on the proposed development of any contemplated improvements
f. Zoning.

2. Submittal of Sketch Plan. At the above consultation meeting the subdivider must submit a sketch plan on a topographic survey map (it may be a free-hand drawing, but in sufficient detail to determine conditions) indicating the nature of the above conditions. The sketch plan will be reviewed as it relates to:
   a. Topography
   b. The improvements, design, dedications, or reservations required by these regulations
   c. Continuity to existing development within 300 feet of all boundaries
   d. Regulations as set down by Chapter 236 of the revised Wis. State Stats.
   e. Regulations established under Chapters H55, H62, and H65 of the Wisconsin Administrative Code as regulated by the State Department of Health and Social Services
   f. Regulations established under Chapter 33 of the Wisconsin Administrative Code as it relates to highway regulations.
3. The consultation is intended to inform the subdivider of the purpose and objectives of these regulations, the comprehensive plan, comprehensive plan components, and duly adopted plan implementation devices of the Town and to otherwise assist the subdivider in planning the development. In so doing, both the subdivider and planning agency may reach mutual conclusions regarding, the General progress and objectives of the proposed development and its possible effects on the neighborhood and community. The subdivider will gain a better understanding of the subsequent required procedures. The Town Plan Commission shall require submission of a draft of protective covenants whereby the subdivider intends to regulate land use in the proposed subdivision.

4. Preliminary Plat Review within the Town. Before submitting a Final Plat for approval, the subdivider shall prepare a Preliminary Plat and a letter of application. The Preliminary Plat shall be prepared in accordance with this ordinance, and the subdivider shall file sixteen (16) copies of the Plat and a letter of application with the Town Clerk at least ten (10) days prior to the meeting of the Plan Commission at which action is desired. The letter of application must indicate that copies of the plat are on file with the utility companies having jurisdiction over the subject area so that required easements can be determined.
   a. The Town Clerk shall, within two (2) days after filing, transmit four (4) copies to the County Planning Agency; if such agency exists; two (2) copies to the Director of the Planning Function in the State Department of Local Affairs and Development; additional copies to the Director of the Planning Function for retransmission of two (2) copies each to the State Department of Transportation if the subdivision abuts or adjoins a state trunk highway or a connecting street; and to the Division of Health, State Department of Health and Social Services if the subdivision is not served by a public sewer and provision for such service has not been made; two (2) copies to the West Central Wisconsin Regional Planning Agency; two (2) copies to the municipality, if the subject plat is within its extraterritorial jurisdiction; and an adequate number of copies to the Town Plan Commission. The County Planning Agency, the State Department of Local Affairs and Development, the State Department of Transportation and the State Department of Health and Social Services shall be hereinafter referred to as objecting agencies.

b. The Town Plan Commission, in addition to the Town Board, is hereby designated as approving authority for all preliminary plats, shall transmit a copy of the Preliminary Plat to all affected local utility companies for their review and recommendations concerning matters within their jurisdiction. Their recommendations shall be transmitted to the Town Plan Commission within fifteen (15) days from the date the Plat is filed. The Preliminary Plat shall then be reviewed by the Plan Commission for conformance with this ordinance and all ordinances, rules, regulations, comprehensive plans and comprehensive plan components which affect it.

5. Preliminary Plat approval within the Town. The objecting agencies shall, within twenty (20) days of the date of receiving their copies of the Preliminary Plat, notify the subdivider and all other approving and objecting agencies of any objections. If there are no objections, they shall so certify on the face of the copy of the Plat and shall return that copy to the Town Plan Commission. If an objecting agency fails to act within twenty (20) days, it shall be deemed to have no objection to the plat.
   a. The Town Plan Commission, within forty (40) days of the date of filing of Preliminary Plat with the Town Clerk, shall approve, approve conditionally, or reject such Plat. One copy of the Plat shall thereupon be returned to the subdivider with the date and action endorsed thereon; and if approved conditionally or rejected, a letter setting forth the conditions of approval or the reasons for rejection shall accompany the Plat. One copy each of the Plat and letter shall be placed in the Town Plan Commission's permanent file. The recommendation shall then be forwarded to the Town Board for the Town Board approval of the Preliminary Plat.
   b. Failure of the Town Plan Commission to act within forty (40) days shall constitute an approval. Upon the Plan Commission's failure to act within forty (40) days, the Preliminary Plat shall then be forwarded to the Town Board for its approval. The Town Board shall thereafter act upon the Plat within sixty (60) days, or it shall automatically be deemed approved.

See plat requirement checklist, Section 11.20

6. Final Plat Review within the Town. The subdivider shall prepare a Final Plat by way of a certified survey map and a letter of application in accordance with this ordinance and shall file sixteen (16) copies of the Plat and the application with the Town Clerk at least ten (10) days prior to the meeting of the Town Plan Commission at which action is desired.
   a. The Town Clerk shall, within two (2) days after filing, transmit four (4) copies to the County Planning Agency, if such agency exists, two (2) copies to the Director of the Planning Function in the State Department of Local Affairs and Development; additional copies to the Director of the Planning Function for retransmission of two (2) copies each to the State Department of Transportation if the subdivision abuts or adjoins a state trunk highway or a connecting street and the State Division of Health and Social Services if the subdivision is not served by a public sewer and provision for such service has not been made; two (2) copies to the West Central Wisconsin Regional Planning Agency two (2) copies to the municipality if the subject plat is within its extraterritorial jurisdiction; and the original Final Plat and adequate copies to the Town Plan Commission.
   b. Partial Platting. The Final Plat, may, if permitted by the Town Plan Commission, constitute only that portion of the approved Preliminary Plat which the subdivider proposes to record at that time.
   c. Final Plat Approval within the Town. The objecting agencies shall, within twenty (20) days of the date of receiving their copies of the Final Plat, notify the subdivider and all other approval and objecting agencies of any objections. If there are no objections, they shall so certify on the face of the copy of the Plat and shall return that copy to the Town Plan Commission. If an objecting agency fails to act within twenty (20) days, it shall be deemed to have no objection to the Plat.
   d. Submission. If the Final Plat is not submitted within six (6) months of the last required approval of the Preliminary Plat, the Town Board may refuse to approve the Final Plat.

The Town Plan Commission shall, within thirty (30) days of the date of filing of the Final Plat with the Town Clerk, recommend approval, conditional approval or rejection of the Plat and shall transmit the Final Plat and application along with its recommendations to the Town Board.

e. Notification. The Town Plan Commission shall when it determines to recommend approval of a Plat, give at least ten (10) days prior written notice of its intention to the Clerk of any municipality within 1000 feet of the Plat.
f. The Town Board shall, within sixty (60) days of the date of filing the original Final Plat with the Clerk, approve or reject such Plat unless the time is extended by agreement with the subdivider. If the Plat is rejected, the reasons shall be stated in the minutes of, the meeting and a written statement of the reasons forwarded to the subdivider. The Board may not inscribe its approval on the Final Plat unless the Clerk certifies on the face of the Plat that the copies were forwarded to objecting agencies as required herein, the date thereof, and that no objections have been filed within twenty (20) days, or, if filed, have been met.
g. Failure of the Town Board to act within sixty (60) days, the time having not been extended and no unsatisfied objections having been filed; the plat shall be deemed approved.

See plat requirement checklist, Section 11.20

7. Performance Guarantee. The subdivider may be required file with the Clerk of the Town in which the subdivision is located, a performance guarantee to ensure installation and construction of all required improvements at the standards required. At the time each improvement is to be installed and upon its completion, the subdivider must notify the Town to this effect so that adequate inspections can be made. The performance guarantee must be approved by the Town and must:
   a. Be a bond, certified check, or other satisfactory security
   b. Be payable to the Town in which the subdivision is located
   c. Be an amount sufficient to complete the improvements as prescribed
   d. In the case of cash, held in an escrow fund
   e. Specify a satisfactory date for the completion of the improvements
8. When the improvements have been completed and approved, the guarantee must be released and returned. When any of the required improvements have been completed and approved, a portion of the security commensurate with the cost of these improvements may be released and returned. In the event the subdivider fails to install the required improvements in accordance with the final plan, the performance guarantee is forfeited to the Town to be used for completion of the improvements.
9. Recordation. After the final plat has been approved by the Town Board and required improvements either installed or a contract and sureties ensuring their installation is filed, the Town Clerk shall cause the certificate inscribed upon the plat attesting to such approval to be duly executed and the plat returned to the subdivider for recording with the County Register of Deeds. *The Register of Deeds cannot record the Plat unless it is offered within thirty (30) days from the date of the last approval.*
10. Copies. The subdivider shall file ten (10) final copies which evidence all the signatures and the recording information on the final plat with the Town Clerk for distribution to the Park Commission, Town Plan Commission, Town Board, Building Inspector, Utilities, Assessor, the West Central Wisconsin Planning Agency and other affected agencies for their files.

11.17 REPLAT

1. When it is proposed to replat a recorded subdivision or part thereof, to change the boundaries of a recorded subdivision, or part thereof, the subdivider or person wishing to replat shall vacate or alter the recorded plat as provided in Sections 236.40 through 236.44 of the Wis. State Stats. The subdivider, or person wishing to replat, shall then proceed as specified in Section 11.16 of this ordinance.
2. The Town Clerk shall schedule a public hearing before the Town Plan Commission when a Preliminary Plat of a replat of lands within the Town is filed and shall cause notices of the proposed replat and public

hearing to be mailed to the owners of all properties within the limits of the exterior boundaries of the proposed replat and to the owners of all properties within 200 feet of the exterior boundaries of the proposed replat.

11.18 OTHER DIVISION

1. When it is proposed to divide land into two (2) parcels or building sites, whether in unplatted lands or platted lands under 236.34 Wis. State Stats., or when it is proposed to divide a block, lot or outlot into not more than four (4) parcels or building sites within a recorded subdivision plat without changing the boundaries of said block, lot or outlot, the subdivider may subdivide by use of a Certified Survey Map. The subdivider shall prepare the Certified Survey Map in accordance with this Ordinance and shall file an adequate number of copies of the Map and the letter of application with the Town Clerk at least fifteen (15) days prior to the meeting of the Town Plan Commission at which action is desired. This indicates that the Plan Commission will be reviewing the CSM Town Plan Commission recommendation and Town Board approval shall be required under this section.
2. Previous to filing a certified survey map of any parcel of land, the subdivider shall consult with the Town Plan Commission for advice and assistance to assure that the plans do not conflict with local, county, or regional plans. The Town Plan Commission shall require a reasonably accurate preliminary map of the land. It may be a free hand drawing, but of a sufficient scale so that conditions can be determined, to be reviewed for proximity to adjacent street, schools, etc. for analysis of soil types, topography, drainage, and generally for the effect the land division would have on the development of surrounding property. Such map shall describe the entire ownership involved in the process of division, provided, however, that where the division results in a residual parcel in excess of five (5) acres, not intended for immediate sale or other conveyance, the Plan Commission may waive the requirement for inclusion of the residual parcel in which case a supplementary map of reasonable accuracy shall be attached showing the relationship to the original ownership of the parcel or parcels being severed.
3. If any lots to be divided are not served by public sanitary sewer, percolation tests shall be submitted to the Town Clerk for approval by the Town Building Inspector according to the procedure and standards established under the rules of the State Division of Health, Department of Health and Social Services, applicable to subdivisions. Failure of the Town Board to act within twenty (20) days shall constitute approval by that office.
4. After approval of the Town Plan Commission as to general land divisions, the subdivider shall proceed to have drawn a certified survey map which shall be submitted to the Town Clerk who shall, within two (2) days after filing, transmit the copies of the map and letter of application to the Town Plan Commission. According to Chapter 236 of the revised Wis. State Stats., a Certified Survey Map shall meet the following requirements:
    a. The survey shall be performed, and the map prepared by a registered land surveyor
    b. All corners shall be monumented
    c. The map shall be prepared on durable white paper or on tracing cloth or paper of which a photostatic copy can be made, 8 1/2 inches wide by 14 inches long. The scale shall not be more than 500 feet to the inch
5. The map shall include the certificate of the surveyor, giving a clear and concise description of the land surveyed by bearings and distances, commencing with some comer marked and established in the United States public land survey. The surveyor's certificate shall state that he has complied with the requirements of Chapter 236
6. The Town Plan Commission shall transmit a copy of the map to all affected Town Boards, Commissions or Departments for their review and recommendations concerning matters within their jurisdiction. Their recommendations shall be transmitted to the Town Plan Commission within ten (10) days from the date the map is filed. The map shall be reviewed by the Plan Commission for conformance with this Ordinance and all ordinances, rules, regulations, comprehensive plans and comprehensive plan components which affect it. The Town Plan Commission shall, within thirty (30) days from the date of

filing of the map, recommend approval, conditional approval or rejection of the map, and shall transmit the map along with its recommendations to the Town Board.

7. The Town Board shall approve, approve conditionally, or reject such map within sixty (60) days from the date of filing of the map unless the time is extended by agreement with the subdivider. If the map is rejected, the reason shall be stated in the minutes of the meeting and a written statement forwarded to the subdivider. If the map is approved, the Town Board shall cause the Town Clerk to so certify on the face of the original map and return the map to the subdivider.
8. A performance guarantee shall be required for any proposed improvements and shall be as prescribed in Section 11.16(e) above.
9. Recording. The certified survey map shall be recorded with the County Register of Deeds. When a certified survey map has been so recorded, the parcels of land in the map may be described by reference to survey, the volume and page where recorded, and the name of land or improvements offered for dedication shall be deeded recording, unless otherwise arranged.
10. Copies. The subdivider shall file ten (10) copies of the Certified Survey Map with the Town Clerk for distribution to the Town and West Central Wisconsin Regional Planning Agency, the Soil and Water Conservation Services, Building Inspector, Utilities, Assessor and other affected departments for their files.

11.19 ASSESSOR'S PLAT

1. Made under Section 70.27 of the Wis. State Stats. may be ordered by the Town Board at the expense of the subdivider when a subdivision is created by successive divisions.

11.20 PLAT REQUIREMENT CHECK LIST

1. Sketch Plan
    a. Title, scale, north arrow and date must be shown.
    b. The scale should not be less than 200 feet to the inch and be on a topographical survey map. It may be a free hand sketch on a print of such a map and must show:
        i. Subdivision boundaries
        ii. General street and lot layout including streets and other features adjacent and within 300 feet of the proposed subdivision
        iii. Approximate location of trees and other prominent physical features
    c. Must show a location map. It may be free hand and must show:
        i. Municipal boundaries
        ii. Subdivision location and boundaries
        iii. Location of existing facilities which serve or influence the subdivision, e.g., schools, parks, main traffic arteries, shopping centers, utilities, etc.
    d. Must show total acreage of subdivision and number of lots proposed, and the typical width and depth of lots.
    e. Name and address of subdivider or his agent.
    f. Each sketch plan shall specify for each lot the total square footage of each lot created.
2. Preliminary Plat
    a. It shall be clearly marked "Preliminary Plat" and shall be in sufficient detail to determine whether the final plat will meet layout requirements.
    b. Title, scale, north arrow and date must be shown.
    c. The scale shall not be less than 100 feet to the inch and shall be drawn on a topographical survey map having contour intervals of no more than two feet between intervals.
    d. Must show the location and dimensions of:
        i. Existing, planned and proposed streets, public facilities or land, easements and other such features

ii. Facilities or land offered for dedication or reserved for public or other use as indicated
iii. Contour lines/elevation points
iv. Owners of adjoining land
v. Blocks and lots in consecutive order

e. It must have a neighborhood location map showing subdivision location and surrounding roads, etc.
f. It must have a feasibility report on sewage and water facilities.
g. Must show zoning classification, land use and minimum lot sizes within and adjacent to the subdivision.
h. Must be a drawing of all present and proposed street grades and facilities for storm water drainage.
i. There must be a draft of all types of restrictions placed on the land which will become covenants in the deeds for lots shown on the Final Plat when submitted.
j. Must show total acreage of subdivision and number of lots proposed, and the typical width and depth of lots, and total street length must be indicated.
k. Name and address of subdivider or his agent.
l. The preliminary plat shall include an amount of the total square feet of each lot created by the said plat.

3. Final Plat

It shall show more specifically, the corrected and finalized data from the preliminary plat. A final plat of subdivided land shall comply with the provisions of Chapter 236.20 of the Revised Wisconsin Platting Statutes summarized, as follows:

a. General Requirements
   i. On muslin-backed white paper 22 inches wide by 30 inches long
   ii. If more than one sheet is needed, they shall be consecutively numbered
   iii. With a binding margin of 1-1/2 inches on the left side of the 30-inch length and a one-inch margin on all other widths
   iv. With waterproof nonfading black in
   v. Of a scale not to exceed 100 feet to an inch
b. Surveying and Boarding Data
   i. Shall show the exterior boundary survey
   ii. Shall show all monuments erected, corners and other points
   iii. Shall show the width, length, bearings, degrees; radii and angles of all boundaries; entire parcel; blocks; lots; streets; -easements and centerlines thereof, etc.; and all lake and stream meander lines established by the surveyor in accordance with Section 236.15 of Wis. State. Stats
   iv. The final plat shall show the total number of square feet for each new lot created by the plat and the said number of square feet shall appear on the plat and on each lot created therein
c. Name, Location and Position
   i. The name of the plat shall be printed thereon and shall not be a duplicate of any other plat recorded in the county
   ii. The location of the subdivision by government lot, 1/4 - 1/4 quarter section, section, township, range and county shall be noted under the name of the subdivision
   iii. A small locational map shall be included and shall be oriented in the same direction as the main drawing
   iv. Where provisions are made for access from any subdivision to any lake or stream, the plat shall show the area over which access is provided
   v. The names and dimensions of adjoining streets, state highways and the subdivisions shall be shown and underlined by a dotted line

d. Roads and Public Space [Amended 01/11/2022]

i. The name of each road or street in the plat shall be printed thereon

ii. All lands dedicated to public use shall be so designated

iii. All roads and streets not to be dedicated for public use shall be marked "private"

iv. All Private Roads may not be dedicated to or accepted by the Town of Wheaton until such time as the road or street in question is constructed to Town of Wheaton specifications in effect at the time of dedication or acceptance, and further that the cost of such construction shall be borne by the developer, applicant or abutting property owners. Private roads are only allowed on Certified Survey Maps and shall meet the following requirements:

1. Shall be constructed to the Town of Wheaton Private Road specifications, (See Appendix A, Typical Private Road Detail).
2. No more than 4 lots may be accessed by a private road. Right-of-way width shall be a minimum of 66 feet.
3. A private road shall not exceed 1,000 feet in length.
4. All private dead-end roads shall have sufficient side clearances and a minimum 12-foot overhead clearance to allow access and an adequate turnaround for public service vehicles, including, but not limited to, fire and police vehicles, ambulances, public utility vehicles and school buses.
5. Private roads from an existing public road to the newly created lot(s) shall be shown, dimensioned, and clearly labeled "Private Road" on the map.
6. Easements for private roads shall be nonexclusive, i.e., access shall be granted at all times for public service vehicles, including, but not limited to, fire and police vehicles, ambulances, public utility vehicles, and school buses. Private road easements shown on certified survey maps shall provide the following note on the face of the map: "Any conveyance of the lots shown on this map must be accompanied by a description for the access easement."
7. For all newly created private roads, the owner of each newly created lot accessed thereby shall hold a fractional interest in such private road either by lot ownership extending to the centerline of the road or by designating the roadway as an outlot which is to be owned in equal undivided shares by all lot owners.
8. When 2 or more lots are accessed by a private road, an agreement for the repair and maintenance of such road must be submitted for approval to the Town at the time of application. Maintenance Agreements shall be recorded with the certified survey map.
9. Any land division that contains a private road shall have the following statement placed on the document: "Access to this property is provided by nonexclusive easement. (insert road/street name) as shown on this map is not a public road and the Town of Wheaton and Chippewa County have no responsibility for snow plowing or other maintenance, or for the construction of a driving surface, upon said easement."
10. Developer shall install one properly sized culvert for each lot at the driveway locations as approved by the Town of Wheaton.
11. During construction the road shall be inspected for compliance with this ordinance by the Town Engineer, a Town subcontractor, or Town Official.
12. Payment for Inspection services will be paid from the Administrative Escrow Account.
13. At such time that the Town Engineer, Town subcontractor or Town Official deems the road complete, the Town Engineer, Town subcontractor or Town Official shall issue a Certificate of Acceptance.

14. No building permit shall be issued for any parcel abutting the Private Road until the Town of Wheaton has issued a Certificate of Acceptance.

e. Site Conditions
   i. The final plat shall show all existing buildings, watercourses, drainage ditches and other existing features
   ii. It shall also show the water elevations of adjoining lakes or streams at the date of the survey and the approximate high and low water elevations thereof. All elevations shall be referred to some permanent established datum plane
f. Certificates to Accompany Plat
   i. To entitle a final plat to be recorded, the following certificates shall be lettered or printed thereon:
      1. Surveyor's Certificate of compliance with Statutes
      2. A clear and concise description of the land surveyed, divided and mapped
      3. Owner's Certificate
      4. Certificate of taxes paid
      5. Approval certification of the various approving authorities
      6. Local Clerk's certification that plat has been submitted as required by law
g. Drainage Plan Requirements
   i. In order to ensure positive drainage from all lots within each proposed block, so that no surface water will pond within the block, the subdivider shall submit at the time of the preliminary plat review a drainage plan for each block within the proposed subdivision as well as reasonable distance beyond the subdivision limits.
   ii. The drainage plan shall have been prepared by a Registered Professional Engineer, Registered Land Surveyor, or Registered Architect licensed by and in the State of Wisconsin
   iii. The drainage plan shall contain the following:
      1. Scale, north point and date of preparation
      2. The number of acres draining into the subdivision and the number of acres in the subdivision
      3. Lot numbers corresponding to the plat
      4. Direction of flow indicated by arrows on all lot lines, grades along the lot lines, elevations of break points along lot lines, and the distance from the nearest lot corner to the break point
      5. Proposed easements which will be on the final plat
      6. Contour information shall be provided in the drainage plan at vertical intervals of not more than 20-feet, where the slope is less than 10%, and not more than 50-feet, where the slope is greater than 10%. All elevations shall be based on the verified datum plan of the USGS
      7. Reference to an established USGS benchmark
      8. Acres to be filled showing the depth of fill, existing elevation and proposed elevation
      9. Typical proposed street and ditch cross sections
      10. Culvert sizes, where applicable
      11. Where a development is to be serviced by a storm sewer or sump pump shallow collector sewer, the size of pipe, proposed elevations, discharge points, inlets and lateral size shall be indicated
      12. Area where water is to be discharged from the subdivision and the proposed amount of discharge

13. The final grade elevations and grade of the drainage ways in percent slope shall be provided along the front, rear and side yard lot lines. Each lot shall have an established grade identified at each corner of the lot or parcel and at any change in grade or slope along the front, rear and sides yard lot lines and for the proposed house top of foundation
14. The subdivider shall include in the deed restrictions that permanent lawns be established with permanent lawns in conformance with the lot drainage plan elevations within one (1) year after initial occupancy of any house
15. Any other information which shall be required by the Town Board

h. A reproducible copy of the final drainage plan shall be supplied to the Town prior to the approval of the final plat.

i. Where the drainage plan requires a storm inlet to adequately drain the rear portion of lots within blocks of the subdivision, the subdivider shall incorporate restrictive covenants in the deeds for the aforementioned lots that the respective lot owners shall be responsible for maintaining a clear grate on the aforementioned storm drainage inlets.

DESIGN STANDARDS

11.21 LOCATION OF SITE

1. General Plan.
   The location and design of any subdivision or other division must conform to any applicable comprehensive plan, or segment thereof, prepared and adopted.
2. Zoning.
   The use of land in a subdivision or as described by a certified survey map must conform to any applicable municipal, town or county zoning ordinances, however, larger lots may be required where conditions warrant.
3. Objectionable Areas.
   Land subject to hazards of life, health, or property as may arise from fire, floods, disease, noise, falling aircraft or considered to be uninhabitable for other reasons, may not be subdivided for building purposes unless the hazard has been eliminated or the plans show adequate safeguards correcting the hazards.
4. Nearby Development.
   A subdivision shall be coordinated with existing nearby development or neighborhoods so that the area as a whole shall be developed harmoniously in a coordinated manner.
5. Acknowledgement of "Right To Farm".
   The proposed subdivision is being planned in a rural, mostly agricultural setting. The developers of the Subdivision expressly acknowledge Wisconsin Statute § 823.08 Actions against agricultural uses. 823.08 Actions against agricultural uses.
   a. Specifically, the Wisconsin Legislature has found that development in rural areas and changes in agricultural technology, practices and scale of operation have increasingly tended to create conflicts between agricultural and other uses of land. The legislature believes that, to the extent possible consistent with good public policy, the law should not hamper agricultural production or the use of modern agricultural technology. The legislature therefore deems it in the best interest of the state to establish limits on the remedies available in those conflicts which reach the judicial system. The legislature further asserts its belief that local units of government, through the exercise of their zoning power, can best prevent such conflicts from arising in the future, and the legislature urges local units of government to use their zoning power accordingly.
   b. With regard to any nuisance actions against farming, Wisconsin Statute § 823.08 holds that an agricultural use or an agricultural practice may not be found to be a nuisance under most circumstances

11.22 DESIGN OF SITE

1. Natural Features
    a. Preservation. In all divisions of land, care shall be taken to preserve all natural and historic features which will add attractiveness and value to the remainder of the land being divided (i.e., trees, water courses, views, historic structures).
    b. Hillside Development. Where a division of land is on a site that has a slope of more than 12%, the Town Plan Commission may require larger lot sizes than are zoned and may reduce setback requirements upon proper appeal. If a building site has a slope in excess of 12%, on-site absorption systems may not be permitted. The subdivider should encourage by use of covenants, etc. a variety of dwelling types and development suitable to the site.
    c. Water Frontage and Surface Drainage. The damming, filling, or relocating or otherwise interfering with the natural flow or surface water along any surface water drainage, channel or natural water course shall not be permitted except with approval of the Town Plan Commission or any other affected agency. Building setback lines shall be established no less than 75 feet from the high-water line of any stream, lake or water body to prevent construction of any structure other than a dam, bridge, boathouse or revetment in the setback area.
        i. Lots contiguous to any stream, lake or water body shall be designed with sufficient buildable area so that the lowest floor of any building be at least two (2) feet above the ordinary high-water line. (See Chippewa County Shoreland Ordinance requirements for lot size, setbacks, well location, location of on-site absorption systems, etc.)
    d. Planting Screens. The Town shall require planting of buffering easements, extra lot depth or width alongside heavily traveled highways where lots are backed into the roadway; along zoning district lines; as buffer strips separating residential zoning districts from commercial or industrial land uses; as buffer zones along railroad right-of-way; or for any such use as may be deemed appropriate and consistent with the total development of the community.
2. Street Arrangement
    a. Location Principles. The streets shall be properly located and designed with regard to:
        i. Existing and planned streets
        ii. Topographic conditions
        iii. Public convenience and safety including facilitating fire protection and pedestrian traffic
        iv. The proposed uses of land to be served by the streets
        v. Anticipated traffic volumes
        vi. Further subdivision possibilities with suitable access to abutting properties
        vii. Any other principles as may be deemed significant to protect the public Interest by the Town.
    b. Coordination of Existing Street Pattern. The Arrangement, character, extent, width, grade, location, and Boarding specifications of all streets shall conform to local Plan Commission standards; the standards of this ordinance, adopted municipal or county plans and any official highway maps. If there are no comprehensive plans or an official map, the arrangement of streets in a division of land shall provide for the continuation or appropriate projection of existing streets into surrounding areas, subject to topographic conditions, public convenience, safety, and proposed uses of land to be served. Where a subdivision borders on or contains a railroad right-of-way, the commission may require a street approximately parallel to and on each side of such right-of-way, at a distance suitable for the appropriate use of the intervening land. Such distances shall also be determined with regard for the requirements of approach grades and future grade separations.
    c. Subdivision Abutting Arterials. Where a proposed subdivision abuts or contains an existing or proposed street right-of-way of primary classification as designated on the "*Official Map*" of the Town, or as may be determined by the Commission, adequate protection of existing or proposed

development and limitation of access and separation of through and local traffic shall be handled as follows:

i. Reverse frontage with screen planting contained in a nonaccess reservation along the rear property line
ii. By frontage streets
iii. By having development front on a perpendicular street to the primary right-of-way. When lost within the proposed subdivision back upon the right-of-way of an existing or proposed limited access highway or a railroad, a planting easement at least fifteen (15) feet in width shall be provided adjacent to normal lot depth. This easement shall be a part of the platted lots but shall have the following restriction lettered on the face of the plat: "This strip reserved for the planting of trees and shrubs; the building of structures hereon prohibited."
iv. Streets parallel to a limited access highway or railroad right-of-way, when intersecting a major street and highway, said intersection shall be located a minimum distance of two-hundred and fifty (250) feet from said highway or railroad right-of-way. Such distance, where desirable and practicable, shall be determined with due consideration of the minimum distance required for the future separation of grades by means of appropriate approach gradients.

d. Street Design: Unless approved by the Town all streets shall be continuous or shall be planned and constructed to be continuous with future expansion. [Amended 01/11/2022]

i. Arterial Street. Provides for movement of through traffic from one area of the Community to another.
ii. Collector Street. Carries traffic between minor streets and arterial streets and also provides access to abutting, properties.
iii. Minor Street. Primarily provides access to abutting properties. Does not serve through traffic and does not intersect with arterial streets. [Amended 01/11/2022]
iv. Cul-de-sac or Hammerhead turnarounds. [Amended 01/11/2022]
    1. The use of cul-de-sac (Bulb or Eccentric) or hammerhead turnarounds shall be approved by the Town Board and layouts shall be limited to portions of developments which, due to unusual shape, size, location, or topography, floodplain, wetland or other condition may better be served by cul-de-sac or hammerhead turnarounds rather than by continuous roads.
    2. A road utilizing a cul-de-sac or hammerhead turn around shall not be longer than 1,000 feet.
    3. The length of a cul-de-sac shall be measured on its centerline from the connecting centerline intersection to the center of the cul-de-sac.
    4. The length of a hammerhead turn around shall be measured on its centerline from the connecting centerline intersection to the centerline Tee intersection of the Hammerhead.
    5. The cul-de-sac, Eccentric cul-de-sac or hammerhead shall be constructed as per Town standards. (See Appendix A, Cul-de-Sac Detail, Appendix A, Eccentric Cul-de Sac Detail, or Appendix A, Hammerhead Turn Around Detail).
    6. Temporary cul-de-sac or Hammerhead turnarounds may be required where a roadway will not be immediately completed as a through road.

e. Alley. Alleys shall be provided in commercial and industrial districts, except that the Commission may waive this requirement, where other definite and assured provision is made for service access such as off-street loading and parking adequate for the uses proposed. Alleys shall be prohibited in residential areas unless necessary because of topography or other exceptional circumstances. The width of the alleys shall not be less than thirty (30) feet. Dead-end alleys shall

be avoided where possible, but if unavoidable, shall be provided with adequate turn-around facilities at the dead-end, as determined by the Commission.

f. Half-Streets. Half-streets shall not be permitted except:
   i. To complete a street, the other half of which is already dedicated and accepted
   ii. To conform to the major thoroughfare plan or an official map

g. Reserve Strips. Reserve strips controlling access to streets shall be prohibited except where the control is definitely placed with the Town under conditions approved by the Plan Commission.

h. Intersection: Streets shall be laid out so as to intersect at right angles. Intersection approach areas should not exceed a grade of 2% on all approaching streets for a distance of 50 feet from the intersecting points of the right-of-way lines. The minimum turning radius at an intersection shall not be less than 25 feet. Proper sight line easements shall be maintained at all street intersections. Measured along the centerline, there shall be a clear sight triangle easement with sides as follows: State and Federal Highways, 250 feet; arterial streets, 150 feet; collector streets, 75 feet; minor streets, 75 feet. No building, fencing, planting or construction is permitted in this area, nor plantings higher than three (3) feet. The distance between intersections of minor or collector streets with arterials should not be less than 800 feet, and they shall be in alignment with existing and planned streets entering the arterial from the opposite side, unless approved -by the Town Plan Commission. In no case shall intersection centerlines be offset less than 125 feet.

i. Street Grades. Streets shall have a maximum centerline grade of 6% and shall not exceed grades specified as follows: arterial and collector streets, 8% maximum; minor street, 10% maximum. These figures can be adjusted where deemed necessary by the Town. All changes in street grades shall be connected by vertical curves of a minimum length equivalent in feet to fifteen (15) times the algebraic difference in the rates of grade for major streets, and one half (1/2) this minimum for all other streets.

j. Widths. All street rights-of-way shall be the width specified by local ordinance. Where no local or county ordinance applies, the provisions of Section 236.15(2) of the Wis. State Stats. shall apply and the Commission shall impose minimum standards as established by Section 86.26, Wis. State Stats. for improvements on Town roads.

k. Curves. A tangent at least 100 feet long shall be introduced between reverse curves on arterial and collector streets. The minimum radii or curvature on the centerline shall be 300 feet minimum radius for arterial streets; 200 feet minimum radius for collector streets; and 100 feet minimum radius for minor streets.

3. Easements. All easements shall be a minimum of 15 feet wide, unless the Plan Commission deems additional width is necessary for intended purposes at the property side of front, rear and side yard, lot lines or across lots where necessary for electric power and communications facilities; storm and sanitary sewers; streets; trees; and gas, water, or other utility lines. All easements shall be noted on the final document followed by reference to the intended use and proprietors.

4. Storm Drainage. Storm sewers, culverts and related facilities shall be designed to permit the unimpeded flow of natural water courses; ensure the drainage of all low points along the line of streets; provide positive drainage away from on-site sewage disposal facilities. Storm drainage facilities must be designed not only to handle the anticipated peak discharge from the property being subdivided, but also the anticipated increase in run-off that will occur when all the property at a higher elevation in the same drainage basin is fully developed. Where adequate existing storm sewers are readily accessible, the subdivider shall connect his storm water facilities to these existing sewers. In the design of storm drainage facilities, special consideration shall be given to preventing excess run-off onto adjacent property. Where a storm drainage outlet will abut another property, sufficient and adequate Boarding safeguards shall be designed in the plat to prevent damage to adjoining property. Sloped drainage channels must be protected against erosion.

5. Sanitary Sewers. In areas that have a sanitary sewer system on or near the proposed subdivision, the Town shall determine the feasibility of service and the requirements to be followed by the subdivider. In

areas that are not to be served by a sewer system, on-site subsurface sewage disposal systems shall be permitted only where soil tests and feasibility reports the satisfactory as regulated by the Wisconsin State Board of Health (Sections 4-55, 4-62, and 45).

6. Water Facilities. Where there is an existing public water supply system on or near the subdivision, the Town shall determine the feasibility of connection to this system. Where there is a community water supply system, connection must be approved by the Board of the water utility company holding the franchise covering the land to be subdivided and by the Wisconsin State Department of Health and Social Services. Where there is no existing public water supply and no community water supply, individual water supply systems will be permitted in accordance with minimum standards, approved by the Wisconsin State Division of Health Department of Health and Social Services, Section H-55.04 of the Wisconsin Administrative Code.
7. Blocks. The lengths, widths and shapes of blocks shall be determined by: provisions for building sites suitable to meet the needs of the type of use contemplated; zoning ordinance requirements pertaining to lot size and dimensions; needs for convenient access, circulation, control and safety of street traffic; limitations and opportunities of topography. Block lengths shall normally not exceed one thousand eight hundred (1800) feet or be less than one thousand (1000) feet in length. Pedestrian easements or dedications, not less than ten (10) feet wide shall be required where deemed necessary to provide access to playgrounds, schools, shopping centers, or other community facilities.
8. Lot Regulations.
    a. Street access required. No lot shall be created, nor any building placed on a lot that does not access onto a public street or approved private road or way as provided in subsection (b) of this section. Where the access street is not open to traffic at the time of zoning permit application, or is constructed to only a portion of the minimum width required for that street, issuance of the zoning permit may be denied or delayed until the zoning administrator is satisfied that:
        i. In the case of an unopened or partially opened street, the necessary utilities, drainage or paving will be provided in time to facilitate the development or construction authorized by the permit, as assured by execution of a developer's agreement.
        ii. In the case of a street not constructed to its fully planned width, that the zoning permit applicant has dedicated all that is required from the applicant's ownership, and that the resulting available width is sufficient to accommodate the necessary underground utilities and street paving adequate to assure access by public emergency vehicles.
    b. Approved private road or way. Subject to the approval of the Plan commission, approved private streets or ways that lead to public streets may be substituted for direct public street access provided the commission finds that:
        i. It is not in the public interest to require direct public street access at the time of permit application.
        ii. The proposed development will not preclude provision of public street access in the future.
        iii. Easements for private roads shall be nonexclusive, i.e., access shall be granted at all times for public service vehicles, including, but not limited to, fire and police vehicles, ambulances, public utility vehicles, and school buses.
        iv. Any buildings erected, or other improvements made do not interfere with future provision of public streets and are located so as to be in conformance with such future streets. The commission may require that a future street reservation be recorded to set forth the commission's intent and ensure compliance with this section.
    c. Driveway. Any lot created shall be permitted a maximum of two (2) driveways. All driveways are subject to review and approval by the Town Board.
    d. Lot size.
    e. Minimum required. No lot shall be platted of less area or width than five (5) acres required by these regulations in which the lot is placed. The lot must have at least 300 feet of roadway

(public or private) frontage. The only exception of the 300-foot roadway frontage would be lots bordering on the end of any cul-d- sac. [Amended 01/11/2022]

f. Future resubdividability required. Whenever a lot is proposed to be platted larger than the minimum lot size required by the district regulations, or in the case of certain districts that require initial large lot areas due to the unavailability of public sanitary sewer or water at the time of platting, but which districts permit redivision of such lots when such utilities become available, the Plan Commission shall require that the future possible divisions be taken into account in the initial lot layout so as to facilitate such future divisions, and at the commission's discretion, or if required by the district regulations, the future lot lines be shown, or actually created, so that initial construction does not inadvertently preclude such future resubdividability.

g. Lot area, how measured. For the purposes of this chapter, the lot area shall be measured from the road right-of-way line. For the purposes of this chapter, the lot area shall be measured from Wetlands and floodplains may be included in minimum required lot area provided there remains sufficient area not in wetland or floodplain to accommodate the proposed building, access drive and on-site sanitary system and water well where such services are not provided via off-site public utilities.

h. Lot width, how measured. Where a minimum lot width is specified by individual district regulations, measurements shall be applied as follows:

   i. For interior, rectangle-shaped lots, the width shall be measured at the rear of the required setback area.

   ii. For corner lots, the width shall be measured at the rear of the required setback area on the narrowest street side; and the district regulations may also provide that the lot width be up to 20 percent greater than for an interior lot in the same district.

   iii. For interior irregular-shaped lots such as pie-shaped or L-shaped lots, the width specified by the district regulations for rectangular interior lot shall constitute the required minimum average width of irregular interior lots, measured at the point of average depth. Such lots shall have a minimum frontage on a public or private street or approved way of at least 300 feet, or greater if specified in the district regulations.

i. Lot area reduction. No lot area shall be reduced by any means so as to create a lot of less than the required size or so that the existing setbacks, yards, open space, or lot area would be reduced below that required by the regulations for the district in which such lot is located.

REQUIRED IMPROVEMENTS

11.23 SURVEY MONUMENTS

1. The subdivider shall install survey monuments placed in accordance with the requirements of Chapter 236.15 of the Wis. State Stats. and as may be required by the Town Board.

11.24 GRADING

1. After the installation of temporary block corner monuments by the subdivider and establishment of street grades, the subdivider shall grade the full width of the right-of-way of all streets proposed to be dedicated in accordance with plans and standard specifications approved by the Town Board. The subdivider shall grade the roadbeds in the street right-of-way to subgrade.

11.25 SURFACING

1. After the installation of all utility and storm water drainage improvements, the subdivider shall surface all roadways in streets proposed to be dedicated to the widths prescribed by these regulations and the comprehensive plan or comprehensive plan components of the Town. Said surfacing shall be done in

accordance with plans and standard specifications approved by the Town Board. All roadways and streets to be accepted by the Town Board must be finish grade with gravel fill to the specifications of the Town Board. At a minimum, the roadway or street shall be hard surfaced with asphalt according to the specifications give by the Town Board. Said hard-surfaced paving of the roadway shall be completed within three years of the construction of the roadway. The Town Board may require the subdivider be bonded for the price of hard surfacing the roadways before approving the subdivision.

2. After the street has been brought to the hard-surface specifications of the Town, at the cost of the person dedicating the street or the subdivider as the case may be, then the Town may take over and maintain the same. Repairs required to the hard-surface as a result of defects in the hard-surface construction or in the construction below the hard-surface shall be the responsibility of the person dedicating or the subdivider for a period of one (1) year after the acceptance of the street by the Town and a performance guarantee shall be required to insure the payment of such repairs.
3. Where a street has been installed and the person dedicating the street or the subdivider dersires to delay the installation of the hard-surface of the street, then the person dedicating the street or the subdivider shall furnish to the Town a satisfactory guarantee to cover the full installation of the hard-surface street, subject to is ordinance.

11.26 CURB AND GUTTER

1. Curb and gutter is generally not required for local streets, however, such may be required in certain areas. When required or proposed, after the installation of all utility and storm water drainage improvements, the subdivider shall construct concrete curbs and gutters in accordance with plans and standard specifications approved by the Town Board. Wherever possible, provisions shall be made at the time of construction for driveway access curb cuts. The cost of installation of all inside curbs and gutters for boulevard pavements shall be borne by the subdivider.

11.27 RURAL STREET SECTIONS [Amended 01/11/2022]

1. When permanent rural street sections have been approved by the Town Board, the subdivider shall finish grade all shoulders and road ditches, install all necessary culverts at intersections and, if required, surface ditch inverts to prevent erosion and sedimentation in accordance with plans and standard specifications approved by the Town Board. Right-of-way width for public streets and private roads shall be a minimum of 66 feet. Public Roads shall be constructed as per Appendix A, Typical Public Road Detail and Private Roads shall be constructed as per Appendix A, Typical Private Road Detail. All streets and roads shall be constructed to the property line boundary. To facilitate future road connections all private roads planned to be extended or connected to at a future date, the Town of Wheaton shall require an unobstructed ingress egress easement for the length of the Private Road. Such easements shall be indicated on the preliminary and final survey documents.

11.28 SIDEWALKS, PEDESTRIAN AND BIKE PATHS [Amended 01/11/2022]

1. The Town may require sidewalks, pedestrian and/or bike paths where it deems necessary in accordance with plans and standards approved by the Town Board. Appropriate easements for the construction, use and maintenance of sidewalks, pedestrian and/or bike paths shall be indicated on the preliminary and final survey documents.
    a. Sidewalks shall be a minimum of five (5) feet in width.
        i. A ramp shall be built at each pedestrian crosswalk in accordance with the ADA and all other applicable regulations.
    b. Pedestrian and bike paths shall be a minimum of eight (8) feet in width.

11.29 PUBLIC SANITARY SEWERAGE AND PRIVATE SEWERAGE DISPOSAL SYSTEMS

1. The subdivider shall construct sanitary sewers in such a manner as to make adequate sanitary sewerage service available to each lot within the subdivision. If public sewer facilities are not available, the subdivider shall make provisions for adequate private sewage disposal systems as specified by the Town and Wisconsin State and County Boards of Health. The Town Plan Commission may require the installation of sewer laterals to the street lot line. If, at the time of final platting, sanitary sewer facilities are not available to the plat, but will become available within a period of five (5) years from the date of plat recording, the subdivider shall install or cause to be installed sanitary sewers and sewer laterals to the street lot line in accordance with this section and shall cap all laterals as may be specified by the Town Board and Sanitary District. The size, type and installation of all sanitary sewers proposed to be constructed shall be in accordance with plans and standard specifications approved by the Town Board and Sanitary District. Subdivider shall assume the cost of installing all sanitary sewers.

11.30 STORM WATER DRAINAGE FACILITIES

1. The subdivider shall construct and assume the cost of all required storm water drainage facilities, which may include curbs and gutters, catch basins and inlets, culverts, storm sewers, road ditches and open channels, as may be required to meet the minimum requirements and standards of Storm Water Drainage Standards. All such facilities are to be of adequate size and grade to hydraulically accommodate maximum potential volumes of flow; the type of facility required, the design criteria and the sizes and grades to be determined by the subdivider's Board, so as to be in conformance with the requirements and standards.
2. Should any subdivision disrupt any drainage courses, the subdivider is responsible for relocating this course to the satisfaction of the Town Board and, if applicable, the appropriate state, county or local agency and allowing the natural flow of storm water.
3. Storm drainage facilities shall be so designed as to present no hazard to life or property; and the size, type and installation of all storm water drains, and sewers proposed to be constructed shall be in accordance with the plans and standard specifications approved by the Town Board.

11.31 PUBLIC WATER SUPPLY FACILITIES

1. The subdivider shall construct water mains in such a manner as to make adequate water service available to each lot within the subdivision. If municipal water service is not available, the subdivider shall make provisions for adequate private water systems as specified by the Town and Wisconsin State and County Boards of Health. The Town Plan Commission may require the installation of water laterals to the street lot line. The size, type, and installation of all public water mains proposed to be constructed shall be in accordance with plans and standard specifications approved by the Town Board and Sanitary District. The subdivider shall assume the cost of installing all water mains.

11.32 OTHER

1. The subdivider shall cause gas, electrical power and telephone facilities to be installed in such a manner as to make adequate service available to each lot in the subdivision. No such electrical or telephone service shall be located on overhead poles along the front lot lines unless otherwise allowed due to exceptional topography or other physical barrier. The subdivider shall consult with the various utility companies to determine the feasibility of burying utility lines.
2. Plans indicating the proposed location of all gas, electrical power and telephone distribution and transmission lines required to service the plat shall be approved by the particular utility having jurisdiction.

11.33 STREETLAMPS

1. The subdivider may have streetlamps installed of a type acceptable to, and in accordance with, plans and standard specifications set by the Town Park Commission and/or Town Plan Commission and the applicable utility company, and only after Town Board approval.

11.34 STREET NAME SIGNS

1. The subdivider shall install at the intersection of all streets proposed to be dedicated a street name sign of a design specified by the Town.

11.35 STREET TREES

1. The subdivider may plant trees of a species acceptable to, and in accordance with, plans and standard specifications set by the Town Park Commission and/or Town Plan Commission.

11.36 LOT GRADING

1. If topographic conditions warrant, the Plan Commission may require that grading plan be submitted prior to the approval of a proposed plat.

CONSTRUCTION

11.37 COMMENCEMENT

No construction or installation of improvements shall commence in a proposed subdivision until the final plat has been approved and the Town Board has given written authorization, and only after required sureties have been accepted by the Town.

11.38 BUILDING PERMITS

No building permits shall be issued for erection of a structure on any lot not of record until all the requirements of this ordinance have been met.

11.39 PLANS

2. The following plans and accompanying construction specifications shall be required by the Town Board before authorization of construction or installation of improvements:
    a. Street Plans and profiles showing existing and proposed grades, soil conditions, elevations, and cross sections of required improvements
    b. Sanitary sewer plans and profiles showing the locations, grades, sizes, elevation, and materials of required facilities
    c. Storm sewer plans and profiles showing the locations, grades, sizes, cross sections, elevations, and materials of required facilities
    d. Water main plans and profiles showing the locations, sizes, elevations, and materials of required facilities
    e. Planting plans showing the locations, age, and species of any required street trees
    f. Additional special plans or information as required

11.40 INSPECTION

1. The subdivider, prior to commencing any work within the subdivision, shall make arrangements with the Town Board to provide for adequate inspection. The Town Board shall inspect and approve all completed work prior to release of the sureties.

11.41 PLANNED UNIT DEVELOPMENT

1. Purpose. The purpose of the Planned Unit Development and applicable regulations is to encourage desirable, quality development through greater flexibility and design freedom than that permitted under

the basic regulations. For projects conceived and implemented as comprehensive and cohesive developments, these regulations are established to permit and encourage diversification, variation, and imagination in the relationship of uses, structures and heights of structures; encourage the preservation of open space; and encourage more rational, economic development with respect to the provisions of public services. Any development approved hereunder must conform to the use designated by Chippewa County Zoning Regulations.

2. General Provisions
    a. Qualification as an Applicant. Applicants for a Planned Unit Development can be an individual, firm, trust, partnership, public or private association or corporation. At the time of application for preliminary approval the applicant must demonstrate the ability to eventually exercise single ownership of the planned area. Previous to final approval the applicant must acquire the entire planned area and placed it in his singular ownership.
    b. Boarding Design Standards. Normal standards or operational policy, regarding right-of-way widths, provision for sidewalks, street lighting and similar environmental design criteria shall not be mandatory in a Planned Unit Development, but precise standards satisfactory to the Town Plan Commission, pursuant to the criteria as set forth in subsection (3) hereof shall be made a part of the approved plan and shall be enforceable as a part of this ordinance.
    c. Guarantee of Performance. At the time final approval is given, the developer shall enter into an appropriate agreement, through contract and performance bond, with the Town insuring the completion of the proposed development in accordance with the plan and approvals given. Specific application of the performance bond shall be determined by the Plan Commission within the review process and approved by the Town Board.
    d. Failure to Comply. Failure to comply with conditions, commitments, guarantees, or recommendations established in the approval of such development project shall be cause for rescinding the approval of the same. Upon notice given by the Building Inspector, the developer then shall be required to appear before the Plan Commission, at its next meeting, to explain any such failure to comply.
        i. The Plan Commission at such meeting may set a time limit for compliance or recommend specific steps to be taken to rescind the approval of the development, including the termination of the construction of any buildings of such site upon 30 days notice in writing to the developer at his last known address. Termination may be done only on approval of the Town Board.
3. Criteria for Approval. As a basis for determining the acceptability of a Planned Unit Development, the following criteria shall be applied to the development plan with specific consideration as to whether or not it is consistent with the spirit and intent of this ordinance, has been prepared with competent professional advice and guidance, and produces significant benefits in terms of environmental design.
    a. Character and Intensity of Land Use. In a planned development the uses proposed and their intensity and arrangement on the site shall be of visual and operational character which:
        i. Is compatible to the physical natural of the site with particular concern for preservation of natural features, tree growth and open space
        ii. Would produce an attractive environment of sustained aesthetic, ecological desirability, and functional practicality compatible with the general development plans for the area as established by the community
        iii. Would not create a traffic or parking demand incompatible with the existing or proposed facilities to serve it
    b. Economic Feasibility and Impact. The proponents of a planned unit development shall provide satisfactory evidence of its economic feasibility and, if available, adequate financing.
    c. Boarding Design Standards. The width of street rights-of-way, width and location of street or other paving, outdoor lighting, location of sewer and water lines, provision for storm water drainage or other similar environmental Boarding consideration shall be based upon a

determination as to the appropriate standards necessary to implement the specific function in the specific situation, provided, however, that in no case shall minimal construction standards be less than those necessary to insure the public safety and general welfare.

d. Preservation and Maintenance of Open Space. In a Planned Unit Development adequate provision shall be made for the permanent preservation and maintenance of common "open space" either by private reservation or by dedication to the public.
    i. In the case of private reservation, the open area to be reserved shall be protected against the building development by conveying to the Town as part of the conditions for project approval an open space easement over such open areas restricting the area against any future building or use except as is consistent with that of providing landscaped open space for the aesthetic and recreational satisfaction of the surrounding residences. Buildings for noncommercial recreational or cultural purposes compatible with the open space objective may be permitted only when specifically authorized as part of the development plan, or, subsequently with the express approval of the Town board following approval of building, site and operational plans by the Plan Commission.
    ii. The care and maintenance of such open space reservations shall be assured by establishment of an appropriate management organization for the project. The manner of assuring maintenance and assessing such cost to individual properties shall be determined prior to the approval of the final development plan and shall be included in the title to each property.
    iii. 0wnership and tax liability of private open space reservations shall be established in a manner acceptable to the Town Board and made a part of the conditions of the plan approval.

(e) Implementation Schedule. The proponents of a Planned Unit Development shall submit a reasonable schedule for the implementation of the development to the satisfaction of the Plan Commission, including suitable provisions for assurance that each phase could be brought to completion in a manner which would not result in adverse effect upon the community as a result of termination at that point.

4. Procedure for Approval. The procedure for approval of a Planned Unit Development shall be comprised of the following stages:
    a. Initial discussion with the Plan Commission to determine general feasibility or the Planned Unit Development
    b. Preliminary approval of the plan in principle only by the Town Board after referral to the Plan Commission, the Plan Commission shall hold a public hearing on the Plan and shall refer the Plan back to the Town Board for the said preliminary approval
    c. Final approval of the Plan in all its terms and details by the Town Board based on consistency with the preliminary plans as approved
5. Preliminary Approval
    a. A person desiring to develop a particular site as a Planned United Development shall inform the Plan Commission of such desire and shall secure a date for a preliminary discussion with them. Prior to such discussion the Plans shall be referred to the Town Board for approval in principle only.
    b. The Plan Commission at such meeting shall set a date for a formal public hearing at the earliest possible date, after which they may approve or disapprove of the district as presented and refer the plan to-.the Town Board for final approval under Section (6) of this ordinance.
    c. The following information shall be provided by the applicant in adequate detail to satisfy the Plan Commission and the Town Board for preliminary approval.
        i. A statement describing the arterial character of the intended development.
        ii. An accurate map of the planned area, including its relationship to surrounding properties and existing topography within 300 feet of the district's boundaries.

iii. A general development plan of the proposed district showing at least the following information in sufficient detail to make possible the evaluation of the criteria for approval as set forth in Subsection (3) of this ordinance.
    1. The pattern of public and private roads, driveways, and parking facilities.
    2. The size, arrangement, and location of lots and/or proposed building groups.
    3. The type, size and location of structures.
    4. The location of sewer and water mains.
    5. The location of recreational and open space areas and areas reserved or dedicated for public uses such as school, park, etc.

iv. Appropriate statistical data on the size of the. development, residential density, ratio of various land uses, and any other data pertinent to an evaluation under the criteria of Subsection 3.

d. Architectural drawings and sketches illustrating the design and character of proposed structures.

e. General outline of intended organizational structure related to property owner's association, deed restrictions and private provision of common services.

6. Final Approval

a. If the Town Board has approved the proposed plan in principle (and the Plan Commission has approved), pursuant to the provisions of Subsections 4 and 5, the developer may file with the Town Clerk a petition executed by the owner of the property to be developed, or his agent, for the required final approval, stating that he seeks to develop such property under the provisions of this Section. Such petition shall include:

i. The names of the owners and developers of the development site and the mailing addresses and telephone numbers of all parties

ii. A plat of survey of the Planned Unit Development with a recordable legal description, including all -existing utilities and recorded easements. The plat of survey shall conform to Chapter 236 of the Wis. State Stats. (and Chapter 703, of the Condominium Ownership Act) [Revised 8/84]

iii. A copy of any declaration of covenants and restrictions which govern the use, maintenance, and continued protection of the Planned Unit Development. Each development must meet all requirements of State Statute 703, and file a copy of their "Condominium Declaration" and any bylaws governing the administration of properties subject to the Unit Ownership Act [Revised 8/84]

iv. A scale plot plan showing the location, type and size of existing structures (within the planned unit development area and within 300 feet of said area's external boundaries) and of every proposed structure and its proposed use; also, driveways, driveway access roads, parking facilities, lighting appliances, recreation areas, open spaces, screening, fencing and landscaping areas.

v. A topographic map with two root contour intervals showing all public rights-of-way and building locations. Said map shall also indicate all utility lines, storm water drainageways (including capacities and high-water elevations along streams), and any easements, therefore.

vi. Building plans and architectural drawings of all structures in sufficient detail such that the use of each floor and the bulk and aesthetic nature of the building can be determined.

vii. A statistical table indicating the size of the site in square feet, and acreage, percentage of open areas, dwelling unit densities, and approximate costs of individual structures.

viii. A statement indicating the number of stages, if more than one is intended, to be used in constructing the development, the time limit for completion of each stage, and a description of the real property to be included in each stage. If more than one stage is proposed, a plot plan shall be provided indicating the physical location of each stage.

ix. A fee of $50.00 shall accompany the petition.

7. Subsequent Change in the Plan. Any subsequent change in the plans as finally approved shall first be submitted to the Plan Commission, and if in their opinion such change constitutes a substantial alteration of the original plan, the plans shall be resubmitted subject to approval procedures outlined in Subsection (4).
8. Effect of Approval by the Town Board. Final approval of the Planned Unit Development does not constitute approval for the construction of new buildings or structures on the site. Separate approval shall be required for each building or structure upon application for a building permit from the Town Building Inspector who shall determine that the specifications set forth in the approved plan have been and will be complied with.

11.42 OPEN SPACE

1. Dwelling Fee for Single or Multiple Family Dwellings. In order that adequate open spaces and sites for public uses may be properly located and preserved as the community develops; and in order that the cost of providing the park and recreational sites and Facilities necessary to serve the additional families brought into the community may be most equitably apportioned on the basis of the additional need created by the construction and occupancy of new dwellings, the following provisions are established:
    a. Dwelling Unit Fee Established. A dwelling unit fee is hereby established in the sum of $200.00 per dwelling unit, fee shall be assessed under the terms of this ordinance. Before the issuance of a building permit, the contractor or subdivider or other person requesting a building permit shall be required to show proof of payment of the fee before the building permit is issued.
    b. Dwelling Unit Defined. For purposes of this ordinance, "dwelling unit" shall be defined as "the building or group of rooms within a building where one person or a group of persons resides as a family unit".
    c. Method of Assessment. In the case of the construction of a single or multiple dwelling unit on a parcel of land subdivided or not subdivided or required to be subdivided (or having previously been subdivided), the owner or contractor shall pay the $200.00 per unit fee before issuance of the building permit. In the event that more than one dwelling unit (example: duplex or multi-family apartment house) is to be constructed on a lot or parcel, each dwelling unit will be required to pay a $150.00 fee before a building permit is issued. This provision shall apply to all residential dwelling units constructed after the effective date of this ordinance.
    d. Conditional use permit conditions for Mobile Homes shall include a condition that, prior to granting of the Conditional Use Permit, the developer shall deposit with the Town Treasurer the sum of $200.00 per planned living unit in the Mobile Home Park, said fees to serve as the Open Space Fee for the Mobile Home Park.
    e. Severability. The provisions of this ordinance are severable and if, for any reason, a clause, sentence, paragraph, section or other part of this ordinance should be decided by a court of competent jurisdiction to be invalid, such invalidity shall not affect other provisions which can be given effect without the invalid provisions.
    f. Violations and Penalties. Any person who fails to comply with the provisions of this ordinance shall, upon conviction thereof, forfeit, in addition to the above, mentioned development fee, not less than $25.00 nor more than $400.00 plus the costs of prosecution for each violation and, in default of payment of such forfeiture and costs, shall be imprisoned in the county jail until payment thereof, but not exceeding 30 days. Each violation and each day a violation exists or continues shall constitute a separate offense. [Amended 8/12/03].
    g. Subdivision Fee; Use of. The $200.00 per residential dwelling, unit fee is to be placed in a nonlapsing fund to be used solely for capital improvements for the Town of Wheaton park and recreation purposes. Such fee shall be used exclusively for immediate or future site acquisition or capital improvement under the direction of the Park Commission.

11.43 (ZONING & CODE VARIANCE'S) REGISTRATION REQUIRED

Any Zoning or Code Variance granted on land located in the Town of Wheaton shall be filed with Chippewa County Register of Deeds using the following form:

TOWN OF WHEATON CHIPPEWA COUNTY, WISCONSIN

RE:

_____

_____

_____

_____

_____

The Town Board of Supervisors of the Town of Wheaton hereby gives notice to the public and in particular to the new owner, or any subsequent owner of the above-described real estate, that a Zoning or Code Variance, has been granted, in favor of the above-described real estate and that such Variance may have an adverse affect, in the future, upon the ability to resell, repair or replace any leasehold improvement upon the above-described real estate.

The Zoning Variance in this matter is as follows:

_____

_____

_____

Any property owner or interested subsequent property owner of the above-described real estate should consult with the Town of Wheaton, and the Chippewa County Zoning Coordinator to determine the affect of the granted Variance upon the above-described real estate.

11.44 TOWN OF WHEATON OFFICIAL STREET, ROAD, HIGHWAY, PARK, PARKWAY, WATERWAY, RIGHT-OF-WAY, ETC., MAP

1. Intent. It is the intent of the Town of Wheaton Board (Town Board) to establish an Official Map for the purpose of serving and promoting, the public health, safety, convenience, economy, orderliness and general welfare of the Town; to further the orderly layout and use of land; to stabilize the location of real property boundary lines; to insure proper legal descriptions and proper monumenting of land; to facilitate adequate provision for transportation, parks, playgrounds, storm water drainage, and waterways; and to facilitate the further subdivision of larger tracts into smaller parcels of land.
2. Authority. This ordinance is enacted under the authority of Chapters 60, 62, and 236 of the Wis. State Stats., 1983-1984 as amended.
3. Official Map The Official Map shall show the location and extent of all platted and existing streets, highways, parkways, parks and playgrounds, waterways, and railroad rights-of-way within the corporate limits of the Town of Wheaton as heretofore laid out, adopted, and established by law, and shall be deemed conclusive in respect to location and width. There is hereby established as the Official Map of the Town of Wheaton, the Map which accompanies and is made a part of this ordinance bearing the date of January 26, 1987. This map is hereby designated as the "Official Map of the Town of Wheaton," and all notations, references and other information shown thereon shall be as much a part of this ordinance as though the matters and information thereon were fully described herein.
4. Changes and Additions. The Town Board may change or add to the Official Map so as to establish the exterior lines of; widen; narrow; extend; or close any platted, existing, proposed or planned streets, highways, parks, playgrounds, waterways, or railroad rights-of-way.

a. The Town Board shall refer any change or addition to the Official Map to the Plan Commission for review and recommendation thereon prior to adoption. The Plan Commission shall report their recommendation to the Town Board within sixty (60) days.
b. A Public Hearing of parties in interest and citizens before the Town Board shall be required before any changes or additions to the Official Map are effective. Notice of the Public Hearing shall be given as a Class 2 notice under Chapter 985.
c. Changes and additions made by duly approved subdivision plats and Certified Survey Maps shall not require the public hearing if the change or addition do not affect any land outside the subdivision or certified survey map.

5. Building Permits. For the purpose of preserving the integrity of the Official Map, a building permit shall be required for any structure or part thereof that shall hereafter be located, erected, and moved, reconstructed, extended, enlarged, converted or structurally altered. No permit shall hereafter be issued for any building in the bed of any existing or proposed street, highway shown on the Official Map. No permit for the erection of any building shall be issued unless a street or highway giving access to such proposed structure has been duly placed on this Map.
6. Municipal Improvements. No public sewer, water, or other municipal street utility or improvement shall be constructed in any street or highway within the corporate limits of the Town of Wheaton until such street or highway has been placed on the Official Map.
7. Appeals. The Town Board shall have the power to review any administrative decision of the Building Inspector to deny a permit for the erection of a structure under this ordinance and to grant relief from the requirements of this ordinance under the provisions of Sections 62.23(6)(e)(f)(g) of the Wis. State Stats.
8. Certified Copy of the Map. There shall be a certified copy of the Official Map described in Section 3. The certified copy shall be kept in the Office of the Town Clerk and shall be available for inspection by any interested person during regular office hours. The certified copy shall bear on its face a certification that it is a true copy of the Official Map described in and accompanying this ordinance and shall show the date of adoption of this ordinance and shall be signed by the Town Chairman and countersigned by the Town Clerk. Thereafter no change or addition to such Official Map shall become effective until it shall have been indicated by the appropriate convention on the aforesaid certified copy of the Official Map and a certificate placed thereon or attached thereto bearing the number and date of adoption of the amending ordinance. The certificate shall be signed by the Chairman and countersigned by the Clerk.
9. Ordinance to be Filed with Register of Deeds. The Town Clerk shall be responsible immediately upon adoption of the Official Map or any amendments thereto for recording a true copy of the ordinance or amendment with the Register of Deeds of the County of Chippewa, Wisconsin.
10. Enforcement. It shall be the duty of the Town Building Inspector and the Town Constable to enforce the provisions of this ordinance.
11. Penalties. Any person, firm or corporation who fails to comply with the provisions of this ordinance shall, upon conviction thereof, forfeit not more than two hundred dollars ($200.00) and not less than fifty dollars ($50.00) and cost of prosecution for each violation, and in default of payment of such forfeiture and costs shall be imprisoned in the county jail until payment thereof but not exceeding thirty (30) days. No damages shall be allowed for the taking by any Governmental agency, for street or highway purposes, any building erected in violation of this ordinance. [Amended 8/12/03].
12. Severability and Conflict. If any section or part of this ordinance is adjudged unconstitutional or invalid by any court of competent jurisdiction, the remainder of this ordinance shall not be affected thereby. All other ordinances or parts of ordinances of the Town inconsistent with this ordinance to the extent of the inconsistency only are hereby repealed.
13. Effective Date. This ordinance shall be effective upon adoption by the Town Board and publication as provided by law.

APPENDIX A

THIS PAGE INTENTIONALLY BLANK

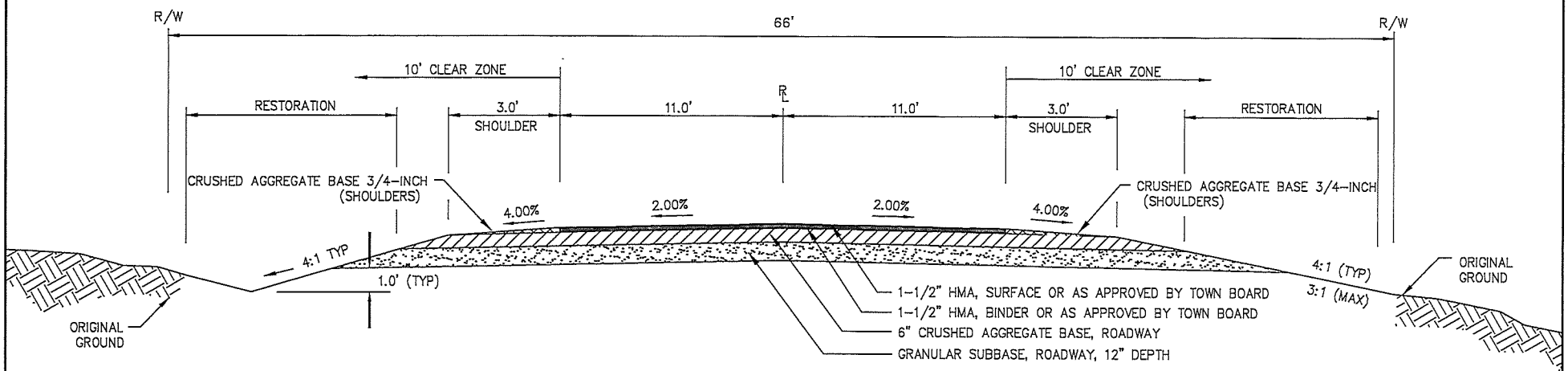

NOTE: ALL DIMENSIONS ARE MINIMUMS

TYPICAL PUBLIC ROAD

NO SCALE

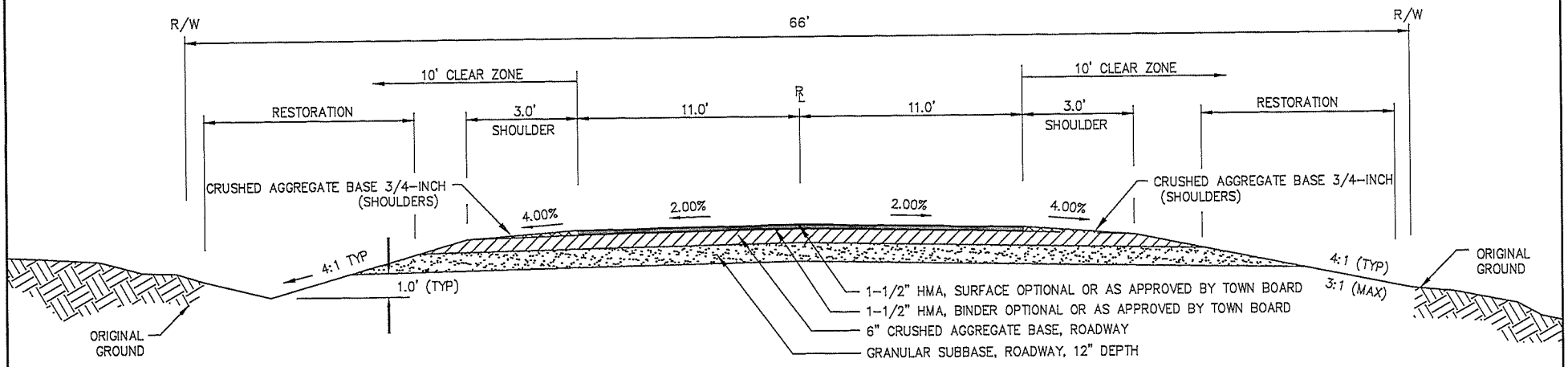

NOTE: ALL DIMENSIONS ARE MINIMUMS

TYPICAL PRIVATE ROAD

NO SCALE

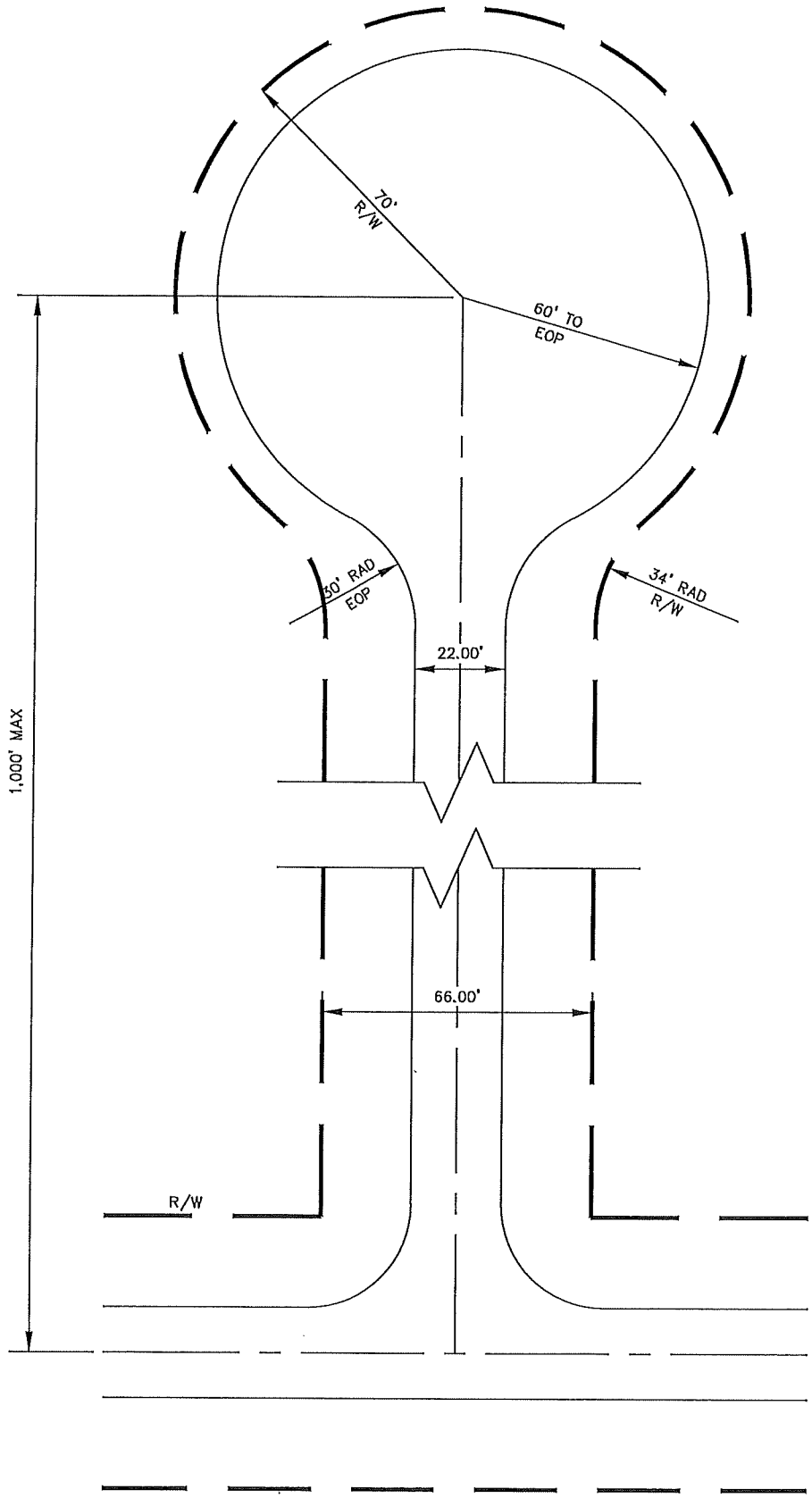

NOTE: EOP = EDGE OF PAVEMENT
R/W = RIGHT OF WAY
ALL DIMENSIONS ARE MINIMUMS UNLESS OTHERWISE NOTED

BULB CUL-DE-SAC

NO SCALE

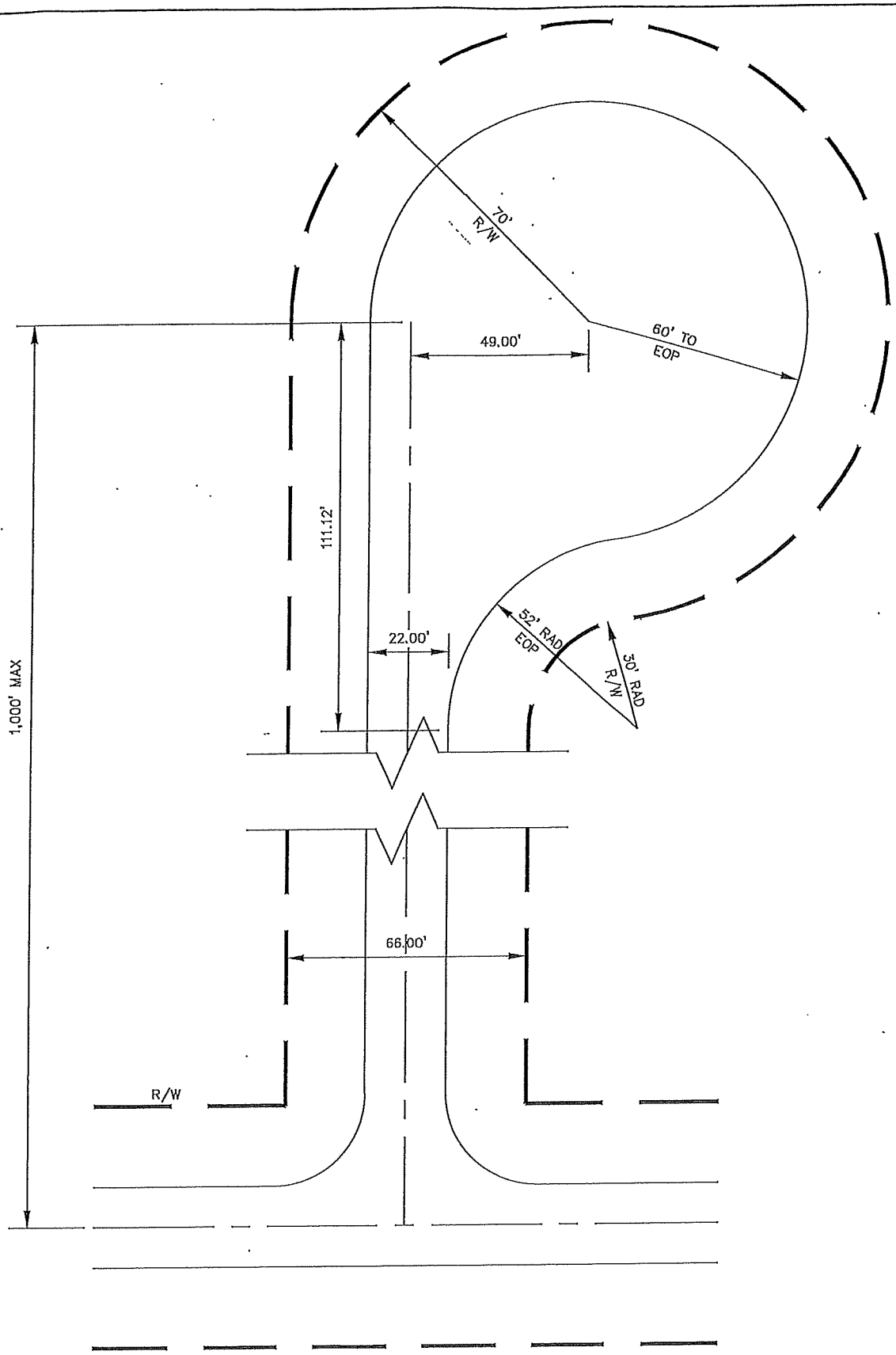

NOTE: EOP = EDGE OF PAVEMENT
R/W = RIGHT OF WAY
ALL DIMENSIONS ARE MINIMUMS UNLESS OTHERWISE NOTED

ECCENTRIC CUL-DE-SAC

NO SCALE

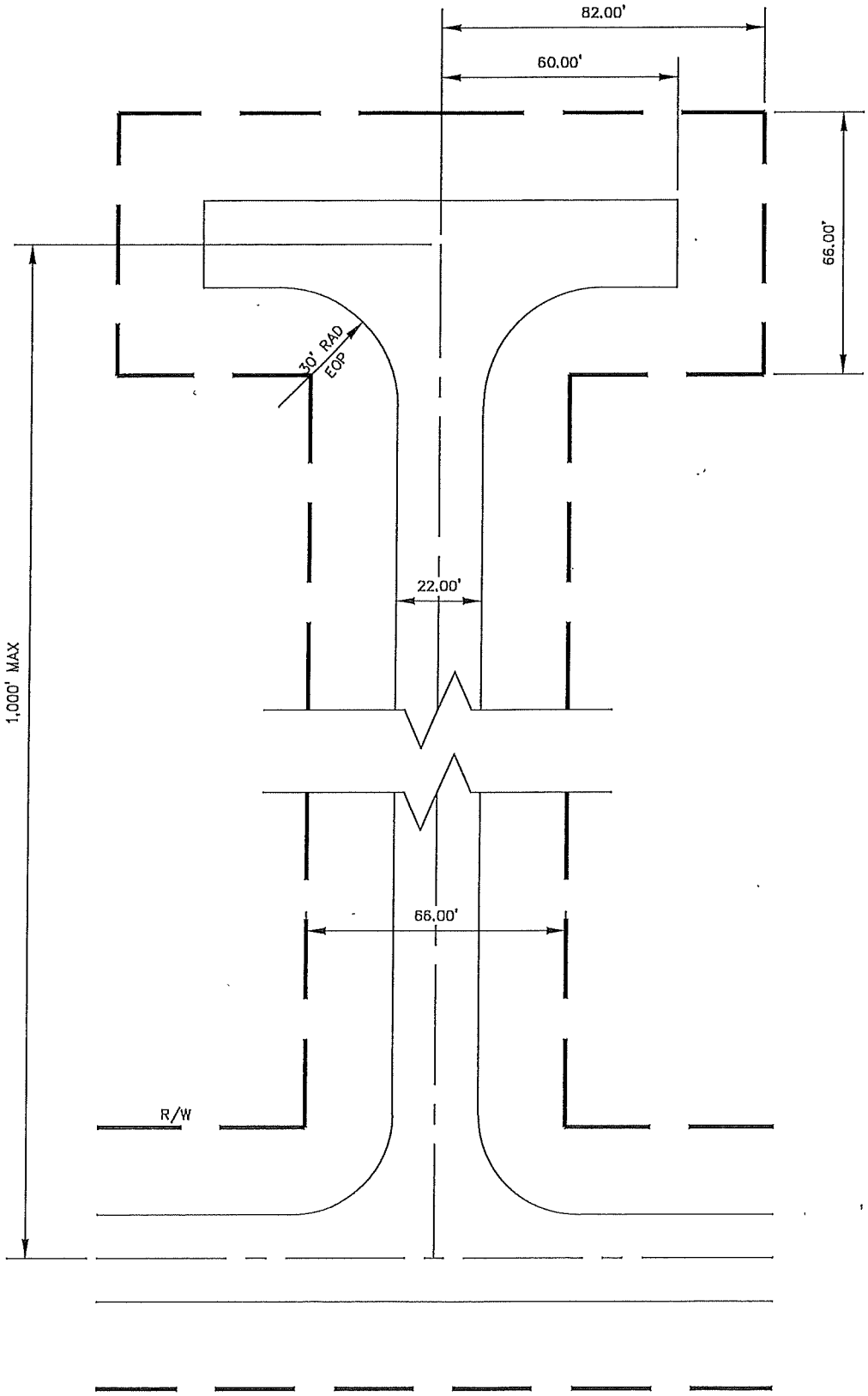

NOTE: EOP = EDGE OF PAVEMENT
R/W = RIGHT OF WAY
ALL DIMENSIONS ARE MINIMUMS UNLESS OTHERWISE NOTED

HAMMERHEAD TURN AROUND

NO SCALE

THIS PAGE INTENTIONALLY BLANK