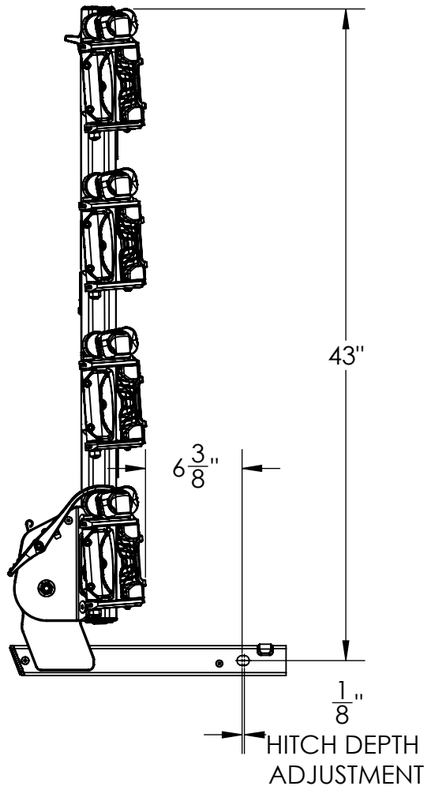
43"
6 3/8"
1/8"
HITCH DEPTH
ADJUSTMENT

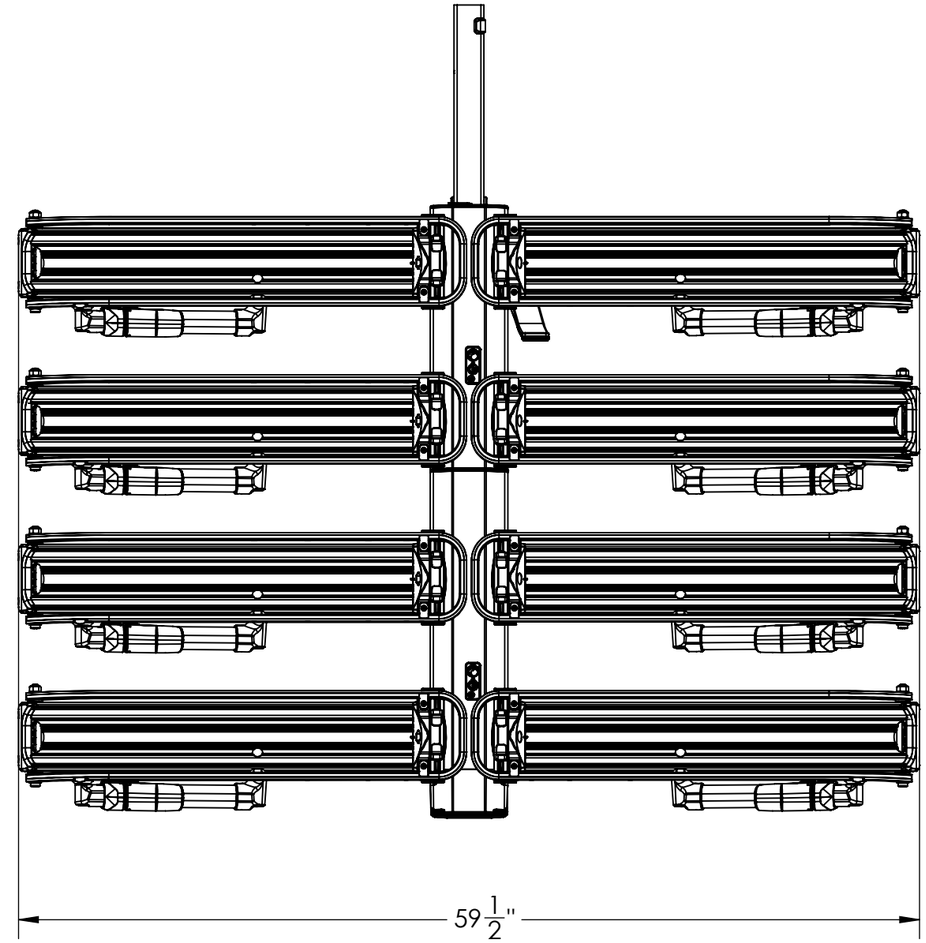
59 1/2"

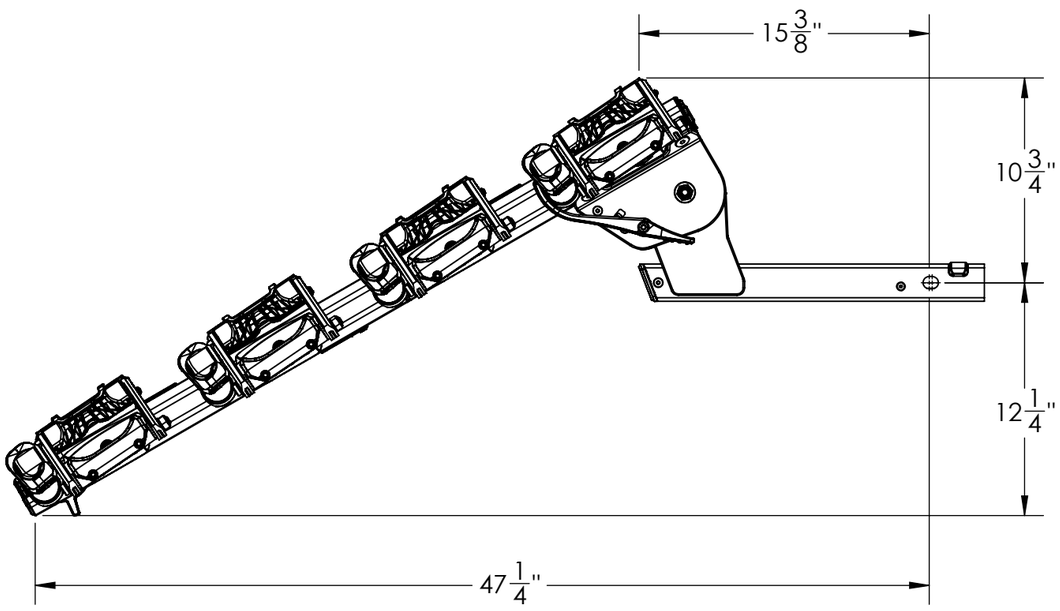
15 3/8"
10 3/4"
12 1/4"
47 1/4"

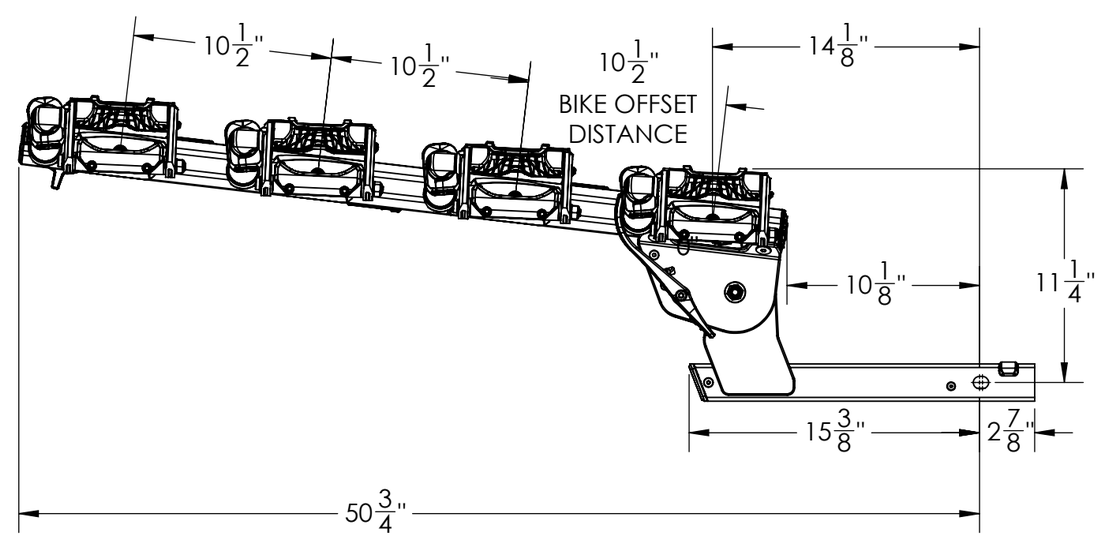
10 1/2"
10 1/2"
10 1/2"
BIKE OFFSET
DISTANCE
14 1/8"
10 1/8"
11 1/4"
15 3/8"
2 7/8"
50 3/4"

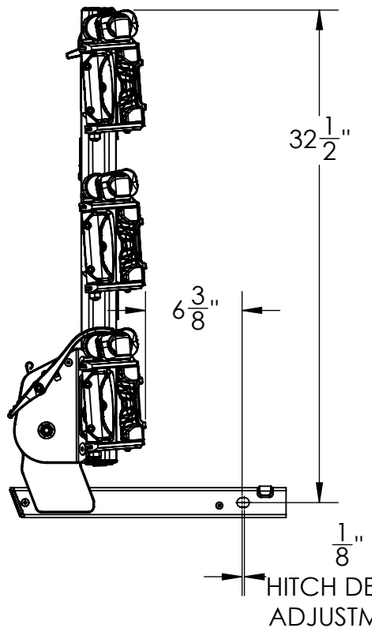
32 1/2"
6 3/8"
1/8"
HITCH DEPTH
ADJUSTMENT

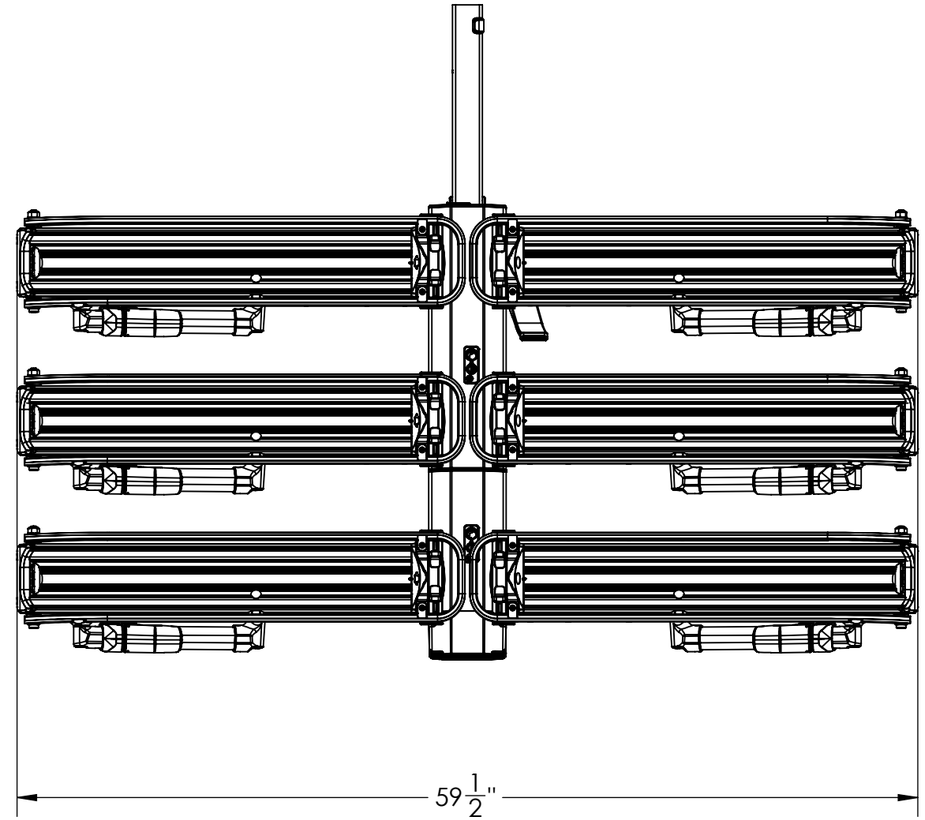
59 1/2"

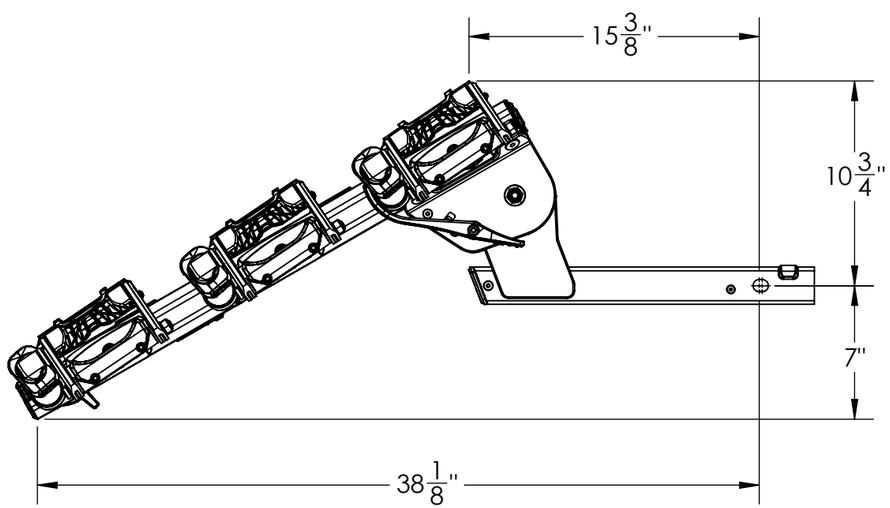
15 3/8"
10 3/4"
7"
38 1/8"

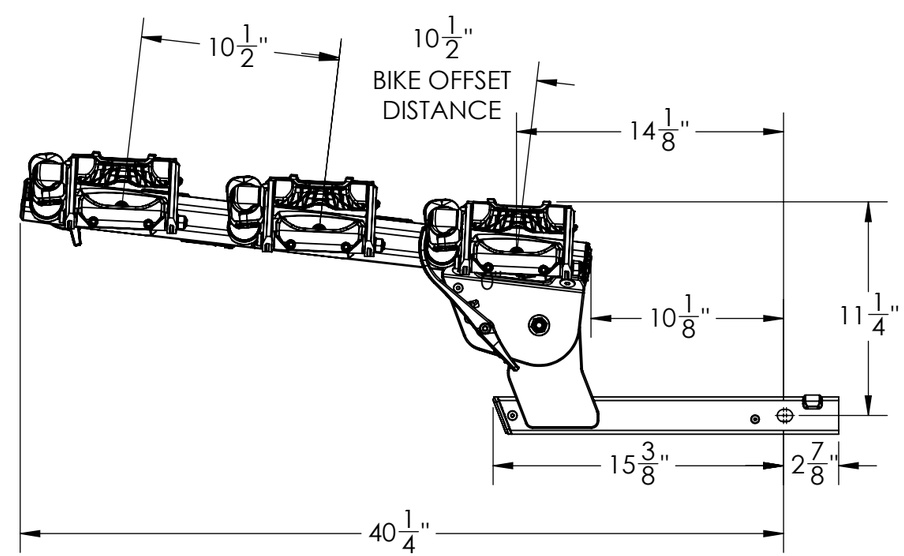
10 1/2"
10 1/2"
BIKE OFFSET
DISTANCE
14 1/8"
10 1/8"
11 1/4"
15 3/8"
2 7/8"
40 1/4"