Tools Needed:
6mm Hex Key, 5mm Hex Key, 4mm Hex Key

kuat®

1. Using the 6mm Hex Key, remove the ten M8 bolts attaching the rack to the direct mounts. Retain the hardware and remove the rack from the vehicle.

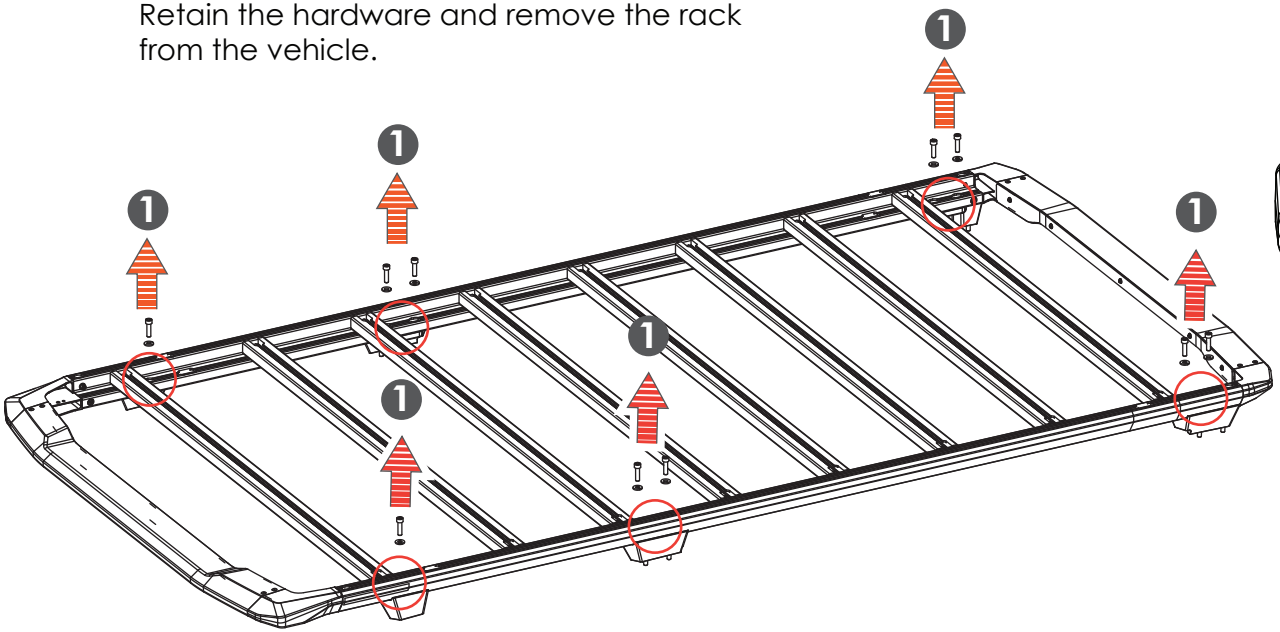

2. Using the 5mm Hex Key, remove the eight M6 bolts from the nose and tail corners.

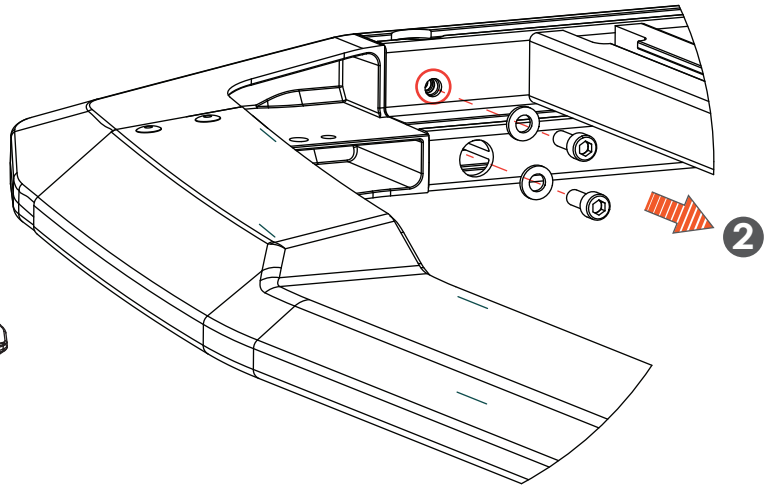

3. Remove the Nose and Tail from the rack.

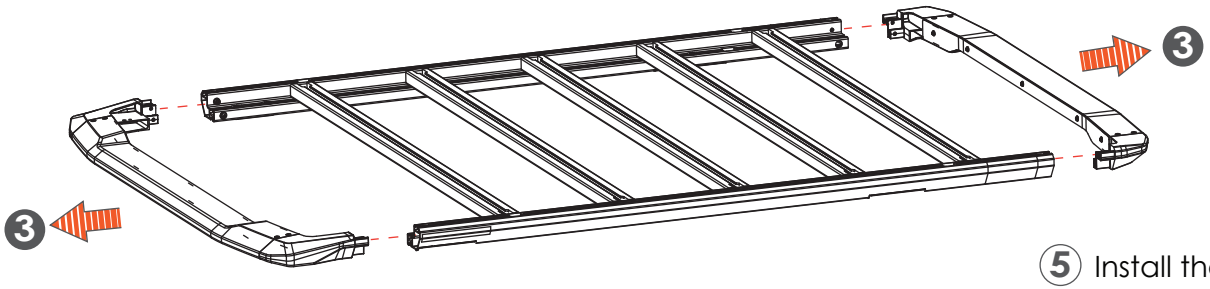

4. Using the 4mm Hex Key, remove the M6 countersink screws from the cross-bars. Retain the countersinks, spacers, and t-nuts. Remove the Side Extrusion.

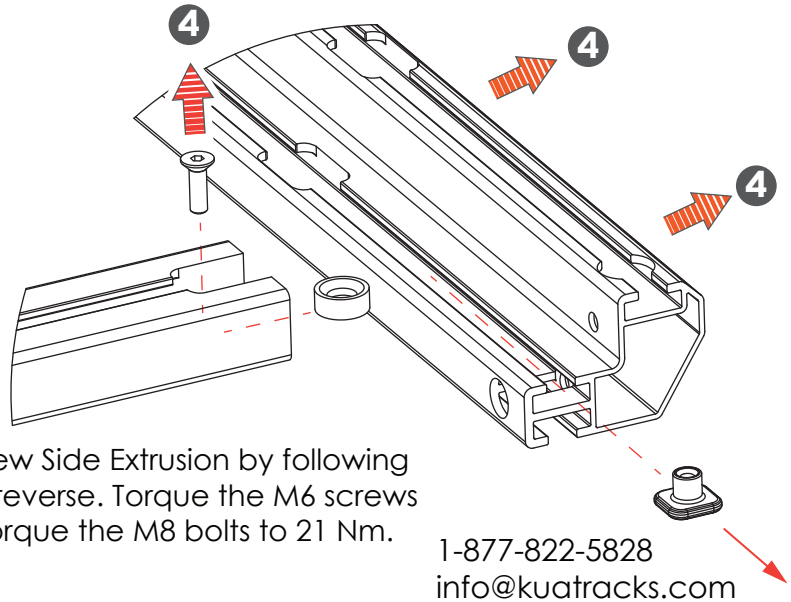

5. Install the new Side Extrusion by following steps 1-4 in reverse. Torque the M6 screws to 12 Nm; torque the M8 bolts to 21 Nm.

1-877-822-5828
info@kuatracks.com