EVO II RTK Series V3

Aircraft

User Manual

V2.0.2 2024.03

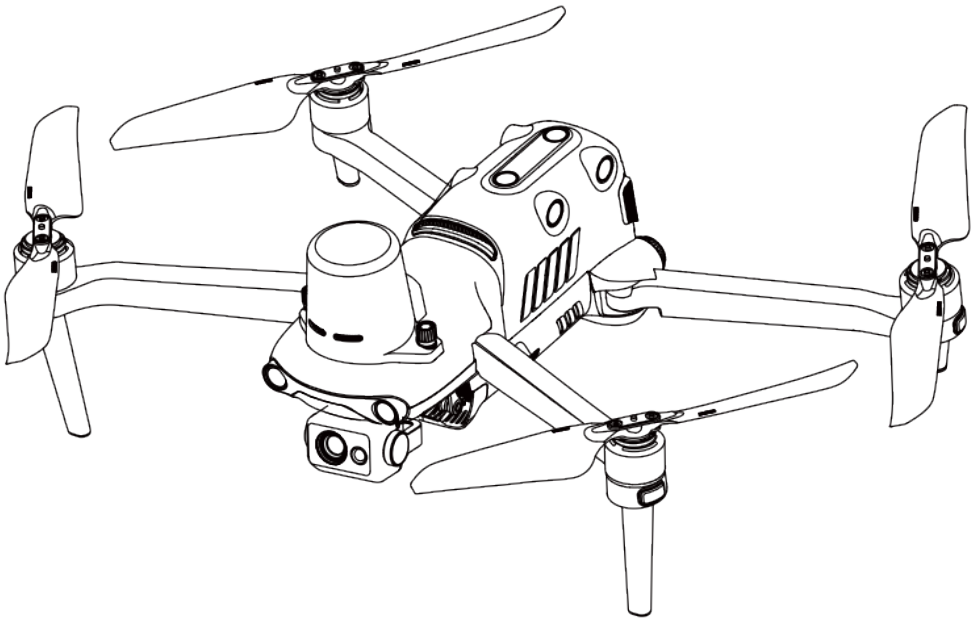

AUTEL ROBOTICS

Copyright

This manual is copyrighted by Autel Robotics Co., Ltd. with all rights reserved. Without prior written authorization from the company, no person (or entity) may copy, scan, store, distribute, reproduce, sell, transfer, or modify any part or all of this manual in any form for personal use or use by others. Users should only refer to this manual and the content thereof as instructions to operate this product. This manual should not be used for other purposes.

Trademark Information

EVO II™, Autel Explorer™ and AUTEL® trademarks are registered trademarks of the Autel Robotics Co., Ltd. (hereinafter referred to as "Autel Robotics") in China or other countries/regions.

Reading Assistance

- This manual is an electronic PDF document that supports high-resolution printing.
- If you are using a PDF reader such as Adobe Reader or Microsoft Edge to read this manual, press Ctrl+F on Windows or Command+F on Mac to search for keywords.
- View the content structure in the table of contents and click on titles to navigate to the respective pages.

Thank you for purchasing and using the EVO II RTK Series V3 aircraft (hereinafter referred to as "aircraft") from Autel Robotics. Relevant user documents for this product are provided in electronic form along with the product, and download links are provided in this manual. Before using this product, please carefully read the operation steps and precautions in this manual, so that you can quickly understand the characteristics and usage methods of this product, so as to ensure safe use of the product.

- The final interpretation right of this document and all related documents of this product belongs to Autel Robotics.
- This document is subject to update without notice.

Legend

The following symbols are used in this manual to draw the user's attention to important safety and operating information. Please be sure to follow the notes or requirements under each symbol, otherwise, it may affect the safety features of the product or cause personal injury.

Symbol	Definition
	Warning: Alerts to a potentially hazardous situation.
	Important: Reminds the user to pay attention to a point.
	Remarks: Supplementary information.
	Tips: Quick tips to get the best possible experience.

Term and Acronym

The following table displays terms and acronyms that may be used in the manual:

Term and Acronym	Defintion
UAS	Unmanned Aircraft System
UAV	Unmanned Aerial Vehicle
C2	Command and Control
DRI	Direct Remote Identification
ADS-B	Automatic Dependent Surveillance – Broadcast
UGZ	UAS Geographical Zones

IMU	Inertia Measurement Unit

Read Before Your First Flight

To ensure safe use of the EVO II RTK Series V3 aircraft, Autel Robotics provides you with the following documents and relevant tutorial videos. Please scan the QR codes in this manual or use the provided links to access them.

1. “Packing List”: A list of everything that should be included in the packing box.
2. “Disclaimer and Safety Operation Guidelines”: Instructions on how to operate the product safely.
3. “Battery Safety Operation Guidelines”: Basic knowledge and safe handling of smart batteries.
4. “Quick Start Guide”: Basic knowledge of operating the product.
5. “User Manual”: A guide for you to master the operation method of the product proficiently.
6. “Maintenance Manual”: Instructions on how to maintain the aircraft and its accessories.

We recommend that you first check the completeness of the items in the packing box according to the “Packing List”, then read the “Disclaimer and Safety Operation Guidelines” carefully, and then watch the tutorial videos and read the "Quick Start Guide" to get a basic understanding of how to use the product.

Before your first flight, please read the "Battery Safety Operation Guidelines" and "User Manual" carefully to get a more detailed understanding of how to use the product.

Getting Tutorial videos, User Documents, and Relevant Software

You can scan the QR codes below or visit the following links to access tutorial videos and user documents or download relevant software for the EVO II RTK Series V3 aircraft:

To watch tutorial videos, please visit:
https://www.autelrobotics.com/videos/evo-ii-rtk/.

To download resources, please visit:
https://manuals.autelrobotics.com/?dir=/EVO%20II%20Series/Aircraft%20V3/.

Manual Guide

This manual contains 7 main chapters and 3 appendices. You can refer to the corresponding chapters for the desired information.

Chapter	Chapter Overview
Product Overview	This chapter introduces the main functions of the EVO II RTK Series V3 aircraft.
Flight Safety	This chapter introduces the flight environment, wireless communication requirements, and important flight safety features of the aircraft.
Aircraft	This chapter introduces the functions and usage of various components of the EVO II RTK Series V3 aircraft.
Remote Controller	This chapter introduces the functions of the Autel Smart Controller V3, including how to use the controller to operate the aircraft.
Smart Battery	This chapter introduces how to use, store, and maintain the smart battery of the aircraft.
Autel Explorer App	This chapter introduces the interfaces and functions of the Autel Explorer App.
Firmware Updates and Maintenance	This chapter introduces how to perform firmware updates and routine maintenance for the aircraft.
Appendix A	This chapter provides technical specifications for the EVO II RTK Series V3 aircraft and its accessories.
Appendix B	EU Declaration of Conformity for EVO II RTK Series V3 aircraft.
Appendix C	EU Drone Pilot Information Notice.

Disclaimer

To ensure the safe and successful operation of this product, please read and fully understand all user documents listed above and strictly follow the operating instructions and steps described in this manual. Store the aircraft and its accessories out of the reach of children and pets. If you do not abide by the Safety Operation Guidelines, Autel Robotics shall not be responsible for any product damage or personal and property loss during use, and shall not provide any warranty service. Never modify the product using any incompatible component or in any way that does not conform to the official instructions of Autel Robotics. Please make sure that the operations you perform do not endanger the personal or property safety of yourself or those around you. By starting to use this product, you agree that you have read and accepted all terms related to this product. You undertake to be responsible for your own actions and all consequences arising therefrom. You undertake to use this product only for legitimate purposes and agree to these terms and any relevant policies or guidelines that Autel Robotics may establish.

Important

- When unboxing the product for the first time, carefully check the aircraft and other accessories included in the packing box according to the “Packing List”.

- The content of this manual will be updated from time to time based on the function updates of the product.
- Please be aware that in the absence of flight logs from the Autel Explorer App, Autel Robotics may not be able to analyze the causes of product damage or accidents and provide after-sales service.

⚠ Warning

- Using the EVO II RTK Series V3 aircraft of Autel Robotics involves certain safety risks. Do not allow minors to operate the aircraft.

Warranty Policy

Autel Robotics guarantees users who purchase products through its official authorized channels that:

Under normal use, the Autel Robotics products you purchase will be free from material and workmanship defects during the warranty period.

If you can provide a valid purchase receipt, the warranty period of this product is calculated from the midnight of the next day after you receive the product.

If you cannot provide a valid purchase receipt, the warranty start date will be postponed by 90 days from the date of manufacture indicated by the product's serial number or as defined by Autel Robotics.

Tips

- For the after-sales policy of the product, please visit: https://www.autelrobotics.com/service/policy/.

After-Sales Support

If you have any questions or concerns about our products, please contact Autel Robotics customer support:

Hotline: (844) MY AUTEL or (844) 692-88 35

Maintenance Service

If your equipment needs to be inspected or repaired, please contact Autel Robotics through the following methods:

Email after-sale@autelrobotics.com or support@autelrobotics.com.

Call Autel Robotics customer support at (844) MY AUTEL or (844) 692-88 35.

Contact dealers authorized by Autel Robotics.

Important

- All data stored on the product may be erased during the repair process. To avoid data loss, please back up important files in your aircraft or remote controller before the product is under warranty.

Company Information

Manufacturer:

Autel Robotics Co., Ltd.

Address:

601,701,801,901, Block B1, Nanshan iPark, No. 1001 Xueyuan Avenue, Nanshan District, Shenzhen, Guangdong, 518055, China

Official Website:

www.autelrobotics.com.

Table of Contents

Chapter 1 Product Overview 1

1.1 Introduction 1

1.2 What's In The Rugged Case 2

1.3 Product Acceptance Checklist 3

1.4 UAS Introduction 4

Chapter 2 Flight Safety 8

2.1 Legal Use Guidelines 8

2.1.1 Chinese Mainland 8

2.1.2 The U.S. 9

2.1.3 Canada 9

2.1.4 The EU 9

2.1.5 Other Countries and Regions 10

2.2 Flight Operation Regulations 10

2.3 Flight Environment Requirements 11

2.4 Wireless Communication Requirements 11

2.5 Declaration of Maximum Take-off Mass 12

2.5.1 Gravity Center Limitation 12

2.6 Obstacle Avoidance System 13

2.6.1 Introduction to the Visual Perception System 13

2.6.2 Visual Positioning Function 14

2.6.3 Visual Obstacle Avoidance Function 15

2.6.4 Precautions for Obstacle Avoidance System Usage 15

2.7 Auto Return Home 16

2.7.1 Manual Activation of Auto Return Home 17

2.7.2 Low Battery Activation of Auto Return Home 17

2.7.3 Behavior Activation of Auto Return Home 18

2.7.4 Auto Return Home Mechanism 18

2.7.5 Auto Return Home Obstacle Avoidance Process 19

2.7.6 Landing Protection Function 19

2.8 Rebuilding of the C2 link 20

2.9 Flight Restrictions and Unlocking 20

2.9.1 Geofence System 20

2.9.2 Restricted Zones 21

2.9.3 Import UGZ 23

2.9.4 Unlocking No-Fly Zones 24

2.10 Altitude and Distance Limits 24

2.11 Aircraft Calibration 25

2.11.1 Compass Calibration 25

2.11.2 IMU Calibration 27
2.11.3 Gimbal Auto Calibration 30
2.12 Emergency Propeller Stop in Flight 30
2.13 Direct Remote Identification 31
2.14 Standard Flight Operation Process 31
2.14.1 Pre-flight Inspection Checklist 31
2.14.2 Basic Flight Procedure 32
2.15 List of Safeguard 33
Chapter 3 Aircraft 34
3.1 Aircraft Activation 34
3.2 Aircraft Components 34
3.3 Propeller 38
3.3.1 Replacing Propellers 38
3.3.2 Storing Propellers 40
3.4 Arm Light 41
3.5 Auxiliary Bottom Light 42
3.6 Camera 43
3.6.1 Camera Structure 43
3.6.2 Camera Operations 44
3.7 Gimbal 44
3.7.1 Gimbal Mechanical Rotation Range 46
3.7.2 Gimbal Operations 46
3.7.3 Replacing the Gimbal 47
3.8 Flight Control System 49
3.8.1 Flight Status 49
3.8.2 Flight Modes 50
3.8.3 Intelligent Flight Function 51
3.9 Installing the microSD Card 51
3.10 Connecting to PC/MAC 52
3.11 Extension Interface 52
3.12 The Noise Description 54
3.13 Autel SkyLink Image Transmission Function 55
Chapter 4 Remote Controller 59
4.1 Introduction 59
4.1.1 Remote Controller Components 59
4.1.2 Communication Frequency Bands 62
4.2 Installing the Remote Controller Lanyard 64
4.3 Installing/Storing Command Sticks 65
4.4 Turning the Remote Controller On/Off 66

4.5 Checking the Battery Level of the Remote Controller 67
4.6 Charging the Remote Controller 68
4.7 Adjusting the Antenna Position of the Remote Controller 69
4.8 Remote Controller System Interfaces 70
4.8.1 Remote Controller Main Interface 70
4.8.2 Shortcut Menu 73
4.9 Frequency Pairing With the Remote Controller 74
4.9.1 Using the Autel Explorer App 74
4.9.2 Using Combination Buttons (For Forced Frequency Pairing) 75
4.10 Selecting Stick Mode 76
4.10.1 Stick Modes 76
4.10.2 Setting Stick Mode 78
4.10.3 Starting/Stopping the Aircraft Motor 80
4.11 Remote Controller Keys 80
4.11.1 Custom Keys C1 and C2 80
4.11.2 Take-off/Return-to-Home Button and Pause Button 81
4.12 Turning On/Off the Remote Controller Prompt Sound 82
4.13 Calibrating the Remote Controller 83
4.14 HDMI Screen Output 84

Chapter 5 Smart Battery 85

5.1 Battery Introduction 85
5.2 Smart Battery Functions 86
5.3 Smart Battery Usage 87
5.3.1 Installing/Removing the Smart Battery 87
5.3.2 Turning On/Off the Smart Battery 88
5.3.3 Checking Battery Level 89
5.3.4 Charging the Smart Battery 90
5.4 Storing and Transporting the Smart Battery 92
5.5 Maintaining and Handling the Smart Battery 92
5.5.1 Maintaining the Smart Battery 92
5.5.2 Standard Charging and Discharging Process 93
5.5.3 Smart Battery Replacement Standards 93
5.5.4 Recycling the Smart Battery 93

Chapter 6 Autel Explorer App 94

6.1 Software introduction 94
6.2 Main Interface 94
6.3 Status Bar 95
6.4 Settings Interface 96
6.5 Operating Mode 99

6.6 Map Interface 101
6.7 Camera Interface 103
6.8 Mission 104

Chapter 7 Firmware Updates and Maintenance 106

7.1 Aircraft and Remote Controller Firmware Updates 106
7.2 Aircraft parts maintenance 107
7.3 Troubleshooting Guide 108

Appendix A Product Specifications 111

A.1 Aircraft 111
A.2 Gimbal Camera 113
A.2.1 EVO II Pro RTK V3 Camera 113
A.2.2 EVO II Dual 640T RTK Camera 114
A.3 Remote controller 116
A.4 Smart battery 119

Appendix B Declaration of Conformity (DOC) 120

Appendix C Drone Pilot Information Notices 123

Chapter 1 Product Overview

1.1 Introduction

The EVO II RTK Series V3 aircraft is a lightweight aircraft, integrated with a visual sensing system of 12 visual sensors for six directions, and has an omnidirectional obstacle avoidance capability. With an excellent power management system, the aircraft can reach a flight time of up to 36 minutes. Also, it utilizes a three-axis stabilized gimbal, allowing you to view observed videos and data from different lenses in real time through the Autel Explorer App.
The EVO II RTK Series V3 aircraft adopts a foldable design and can hold its propellers for easy storage and transportation. The top of the aircraft is equipped with a PSDK interface and mounted with an RTK module, allowing you to meet various operational needs.
The EVO II RTK Series V3 aircraft is equipped with auxiliary light and ultrasonic sensor at the bottom to improve visual positioning performance in weak light conditions, thus enhancing flight safety during landing.
The Autel Smart Controller V3 (hereinafter referred to as "remote controller") adopts the Autel SkyLink 2.0 Image Transmission solution, has strong anti-interference capabilities, and can achieve stable transmission of HD videos to the display screen of the Remote Controller. The remote controller is equipped with multiple function buttons, enabling quick aircraft control and camera operation.
The remote controller features a 7.9-inch 2048×1536 high-brightness touchscreen with a maximum brightness of 2000 nits. It adopts a customized Android system that supports the installation of third-party apps and offers functions such as satellite-based positioning, Wi-Fi, Bluetooth, and HDMI output. Moreover, it supports the PD65 fast charging protocol, allowing it to operate up to 4.0 hours on a full charge.

Tips

- The visual sensing system has limitations in usage environments and regions. Please read the "Disclaimer and Safety Operation Guidelines" to learn about relevant safety precautions.
- The flight time of the aircraft is measured in a laboratory environment (The aircraft flies at a constant speed of 10 meters per second in a light breeze environment) and is for reference only. The actual flight time may vary depending on factors such as environmental conditions and flight mode.
- The 4.0-hour operating time of the remote controller is measured with the screen brightness set to 50% and is for reference only. The operating time may vary in different scenarios.
- Please note that the EVO II RTK Series V3 aircraft includes two models: the EVO II Pro RTK V3 aircraft and the EVO II Dual 640T Enterprise V3 aircraft. They only differ in gimbal cameras. The EVO II Pro RTK V3 aircraft is equipped with a 6K optical gimbal camera, and the EVO II Dual 640T RTK V3 aircraft is equipped with an infrared thermal imaging dual-camera gimbal system.

⚠ Warning

- If multiple aircraft are flying in an area at the same time, please keep an appropriate air distance to avoid any accidents.

1.2 What's In The Rugged Case

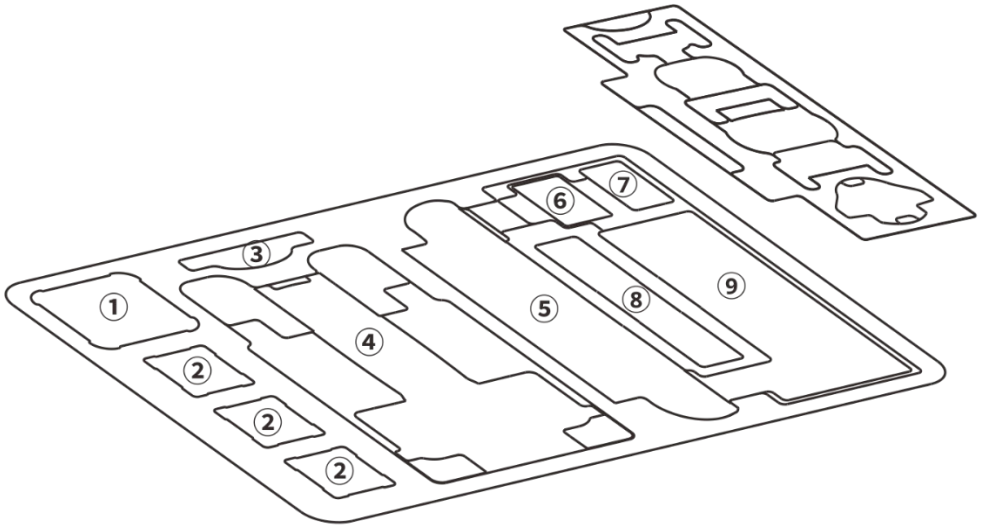

No.	Item	Note
1	Multi-Charger	Comes with a battery multi-charger.
2	Smart Battery	Comes with 2 spare batteries.
3	Document	Includes user manuals and a camera lens cleaning cloth.
4	Aircraft	Includes one battery, an RTK module, a gimbal camera, a gimbal protective cover, and propellers, 32GB SD card. When storing it, please fold the arms and hold the propellers.
5	Remote Controller	Comes with a Autel Smart Controller V3, includes 1 RC Protective Case.
6	Battery Charger	Includes a charger and an AC power cable.
7	Car Charger	/
8	Spare Propeller (pair)	Spare Propeller (CW*2; CCW*2)

9	Accessory Area	Includes an interface protective cover, a USB-C to USB-C data cable, a RC charger, a remote controller lanyard, and spare command sticks (×2).

Important

- Upon receiving the product, please inspect the rugged case in its entirety and confirm that its outer packaging is intact, with no signs of unpacking. Meanwhile, save the unboxing video for potential logistics damage claims.

1.3 Product Acceptance Checklist

After unboxing the product, please check whether the actual items match the items described in the following packing list and carefully inspect the appearance of the aircraft and all accessories. If anything missing or damage is found, please contact Autel Robotics After-Sales Support or authorized dealers promptly.

Table 1-1 Packing List

No.	Item	Model/Specification	Quantity	Note
1	EVO II RTK Series V3 aircraft	MDCV3	1	Includes 1 battery, 1 RTK module, propellers, 1 gimbal camera, and a gimbal protective cover.
2	Interface Protective Cover		1	
3	Spare Smart Battery	XE3_7100_1155	2	
4	Remote Controller	EF9-3	1	Autel Smart Controller V3 comes with 2 command sticks and 2 antennas.
5	Battery Charger	XA3-1320	1	
6	AC Power Cable		1	Used with the battery charger.
7	RC Charger	GaN-001US	1	
8	RC Charging Cable		1	Used with the remote controller charger.
9	Car Charger		1	
10	Multi-Charger		1	

11	Spare Propeller	CW and CCW	2	2 CW propeller and 2 CCW propeller.
12	Spare Command Stick		2	
13	RC Protective Case		1	
14	Remote Controller Lanyard		1	
15	RTK Module		1	
16	User Manual		1	Placed in the document box.
17	Lens Cleaning Cloth		1	Placed in the document box.
18	Product Certification		1	

1.4 UAS Introduction

Before first flight, please perform a comprehensive inspection of the UAS to ensure that all components meet the following requirements. A complete UAS consists of two parts: the aircraft and the remote controller. The relevant requirements and explanations are as follows :

■ Aircraft Components And Payload

Please be noted that a complete aircraft includes the aircraft body, gimbal camera, propellers, and the battery. Any damage or missing of these components may result in a malfunction.
The RTK module are accessories for enhancing aircraft capability, users can mount according t o their own needs.

Table 1-2 EVO II RTK Series V3 Component List

Item	Product Info	Manufacturer	Note
EVO II Pro RTK V3 Aircraft	Max. weight: 1237 g Max. Dimension: 457×558×143mm EAN: 6924991126874 UPC: 889520206877	Autel Robotics	Includes RTK Module, propellers, battery, and a gimbal.
EVO II Dual 640T RTK V3 Aircraft	Max. weight: 1250 g Max. Dimension: 457×558×143mm EAN: 6924991126669 UPC: 889520206662	Autel Robotics	Includes RTK Module, propellers,

			battery, and a gimbal.
Smart Battery	Max. weight: 365 g Max. Dimension: 131.9×61.7×40.1 mm EAN: 6924991130659 UPC: 889520210652 Type: High Performance Lo-po Battery Capacity: 7100mAh Number of batteries needed in the aircraft: 1	Autel Robotics	Included
CW/CCW Propeller	Max. weight: 9.2 g Max. Dimension: 9.5 inches EAN: 6924991101475 UPC: 889520011211	Autel Robotics	Included
RTK Module	Max. weight: 59 g Max. Dimension: 55.5×72.5×57 mm EAN: 6924991102335 UPC: 889520012072 Number of propellers: 2 CW propellers and 2 CCW propellers Model: 9029 Number of blades: 8 Diameter of a propeller: 228 mm Type of the propeller: Folding propeller	Autel Robotics	Included

Tips

- For RTK module, Loudspeaker, Strobe (beacon), Spotlight instructions, please refer to "3.11 Extension Interface " in Chapter 3.
- All the above components have passed Autel Robotics safety and compatibility tests, users can purchase and use accordingly.
- In case of adding any payload before flight, please evaluate the mounting weight reasonably. More details, please refer to "2.5 Declaration of Maximum Take-off Mass" in Chapter 2.

■ Remote Controller Components & The App

A complete remote controller includes the controller body (equipped with a functional touchscreen and buttons), joysticks, and antennas. Any damage or missing of these components may result in a malfunction. The Autel Explorer App, serving as the flight application software that controls the aircraft, should be maintained to ensure comprehensive control over the UAS.

Table 1-3 Remote Controller Components List

Item	Product Info	Operating System	Manufacturer	Note
Autel Smart Controller V3	Max. weight: 1194 g Max. Dimension: 269×302×87 mm EAN: 6924991126263 UPC: 889520206266	Android 11	Autel Robotics	Includes 2 command sticks and 2 antennas.

Table 1-4 Firmware and Software version explanation

No.	Item	Release Version	Note	Release Date
1	Image Transmission	V1.1.1.15	/	2023 Q4
2	Remote Controller	V7.0.3.2	/	2023 Q4
3	Autel Explorer	V3.1.63	Flight Control Software	2023 Q4

Tips

- The above information is for reference only. Both the remote controller and the aircraft have been upgraded to the latest versions before shipment. Users can use accordingly.
- When the remote controller and the aircraft are frequency-paired and the remote controller is connected to the internet, Autel Explorer APP will automatically check for firmware updates. More instructions, please refer to "7.1 Aircraft and Remote Controller Firmware Updates" in Chapter 7.
- When there's any prompt for updates, please follow the instructions to update accordingly to address any issues and to enjoy the new features. Users also have the option to temporarily pause updates; however, this won't affect the existing functions.

Table 1-5 List of Pre-installed Apps on the Remote Controller

NO.	Pre-installed App	Software Version	Note
1	Autel Explorer	V3.1.63	Flight Control Software
2	Files	11	System Software
3	Gallery	1.1.40030	System Software
4	Chrome	68.0.3440.70	System Software
5	Settings	11	System Software

6	Maxitools	2.45	System Software
7	Google Pinyin Input	4.5.2.193126728-arm64-v8a	System Software
8	Android Keyboard (AOSP)	11	System Software

Tips

- The pre-installed Apps mentioned are the basic application for the remote controller. Users also have the option to install third-party software if desired.

Chapter 2 Flight Safety

After the first unboxing, please scan the QR code to obtain the latest version of the manual. Please read and understand the entire manual carefully to ensure the safe and correct use of the aircraft.
Before engaging in actual outdoor flights, it is essential to undergo relevant basic flight training (such as watching instructional videos, receiving guidance from professionals, etc.) to familiarize oneself with the functions and characteristics of the aircraft and remote controller.
Prior to flight, please familiarize yourself with all local laws and regulations concerning civilian unmanned aerial vehicles. Choose an appropriate flight environment, set a reasonable flight altitude, and conduct legal flights in accordance with relevant flight requirements and restrictions. Using the aircraft in unsuitable flight environments may pose legal risks.
Before flight, be sure to read the "Disclaimer and Safety Operation Guidelines" to understand relevant safety precautions.

2.1 Legal Use Guidelines

Upon the initial unboxing, please adhere to the legal requirements of the country or region where you are currently located and complete the real-name registration of the aircraft.

2.1.1 Chinese Mainland

- According to the requirements of the Civil Aviation Administration of China's "Management Regulations for the Real-Name Registration of Civil Unmanned Aerial Vehicles," owners of civilian drones must register their real names on the "Comprehensive Management Platform for Civil Unmanned Aerial Vehicles" (https://uom.caac.gov.cn) after purchase and affix the QR code registration mark on the aircraft. Failure to register with real names and affix the registration mark may result in penalties imposed by regulatory authorities.
- The EVO II RTK Series V3 aircraft is a light unmanned aircraft, and the operation of this product by individuals under the age of 18 is prohibited by Autel Robotics.
- It is recommended to read the "Interim Regulations on the Management of Unmanned Aerial Vehicle Flights" for more detailed regulatory requirements before conducting flights.

Important

- According to the "Civil Unmanned Aerial Vehicle System Safety Requirements" in mainland China, after users register, they should enter their real-name registration number in the Autel Explorer App and activate the DRI system (Direct Remote Identification) and the Civil Aviation Administration's flight dynamic data reporting function. For more details, please refer to “2.13 Direct Remote Identification” in this chapter and “6.4 Settings Interface” in Chapter 6.

2.1.2 The U.S.

- Before using a drone, please complete the real-name registration on the FAA website (https://faadronezone-access.faa.gov/#/) (registrants must be 13 years old or above). Failure to do so may result in regulatory and criminal penalties.
- The Federal Aviation Administration (FAA) in the United States may impose civil fines of up to $27,500. Criminal penalties may include fines of up to $250,000 and/or a maximum of three years in prison.

2.1.3 Canada

- Drone pilots must be 14 or older and always carry a valid drone pilot certificate while operating their drone. A valid drone pilot certificate is a printed or electronic document issued by Transport Canada. No other form of certification will be accepted. For details about how to get a drone pilot certificate in Canada, refer to the following link:
  https://tc.canada.ca/en/aviation/drone-safety/drone-pilot-licensing/getting-drone-pilot-certificate
- Before flight, please register your drone through the following portal:
  https://tc.canada.ca/en/aviation/drone-safety/drone-management-portal
- EVO II V3 Series aircraft belongs to the muti-rotor aircraft type. You can only fly them in following operating environments:
  1. In controlled airspace. For details about the controlled airspace, please refer to relevant Canadian law:
  https://tc.canada.ca/en/aviation/drone-safety/learn-rules-you-fly-your-drone/choosing-right-drone
  2. Near people. For details about flying a drone near people, please refer to relevant law:
  https://tc.canada.ca/en/aviation/drone-safety/learn-rules-you-fly-your-drone/choosing-right-drone
- Violation of relevant laws and regulations may incur penalty of up to 3000 dollars (for person) or 15000 dollars (for company) or jail time.

⚠ Warning
• Please do not fly over people, which may cause physical damage to people around.

2.1.4 The EU

- Drone operators/owners must register with the National Aviation Authority (NAA) in the EU country where they reside (https://www.easa.europa.eu/drones/NAA).
- This product is not a toy, and individuals under the age of 16 are prohibited from operating it.
- In the EU region, The EVO II RTK Series V3 aircraft belongs to the category of Level C2 UAV. When in use, it must comply with the operational restrictions of the A2 subcategory, specifically in urban environments:
  1. Flying over non-involved persons is not allowed.

2. Maintain a horizontal safety distance of at least 30 meters from any non-involved persons, which can be reduced to 5 meters in low-speed mode.
3. Maintain a flight altitude within 120 meters above the ground.

- The EVO II RTK Series V3 aircraft can also fly in subcategory A3.
- Remote pilots should obtain the "Remote Pilot Competency Certificate" for the A2 open subcategory through the following methods:
  1. Possess the "Online Training Completion Certificate" for the A1/A3 open subcategory.
  2. Conduct and declare practical self-training.
  3. Take an additional theoretical exam online or within the National Aviation Authority.
- Before using this product, click the following link to learn the detailed information on safety operation limitations about EASA Class 2 drones with low speed mode: (https://www.easa.europa.eu/document-library/general-publications/drones-information-notices).

Important

- According to EU regulations, the EVO II RTK Series V3 aircraft is equipped with sensors (gimbal camera) capable of detecting personal data. Users are required to undergo legal registration when using the product.
- After registration, users should input the operator registration number in the Autel Explorer App and activate the DRI system. For more details, please refer to "2.13 Direct Remote Identification" in this chapter.

2.1.5 Other Countries and Regions

Before flying, please consult local legal professionals or aviation authorities to obtain information on laws, regulations, and policies regarding civilian unmanned aerial vehicles. Follow the relevant guidelines to undergo legal registration.

2.2 Flight Operation Regulations

Before flying, it is crucial to understand and adhere to the following flight operation regulations. Violating these regulations may lead to severe consequences or even legal consequences.

- Operating the aircraft while under the influence of alcohol, drugs, medication-induced impairment, dizziness, fatigue, nausea, or any other compromised physical or mental condition is strictly prohibited.
- Avoid flying near manned aircraft and ensure that the aircraft's flight does not impact larger manned aircraft on their flight paths. Remain vigilant, steer clear of other aircraft, and land immediately if necessary.
- Do not fly in areas prohibited by local regulations without obtaining authorized permits. Prohibited areas may include airports, borderlines, major cities and densely populated areas, large event venues, emergency situations (such as forest fires), and sensitive building facilities zones (such as nuclear power plants, power stations, hydroelectric plants, prisons, traffic arteries, government buildings, and other related facilities).

- Prohibit the use of the aircraft at large event venues, including but not limited to sports stadiums and concerts.
- Avoid flying in airspace exceeding the regulated altitude.
- Do not use the aircraft to carry any illegal hazardous materials.
- Ensure a clear understanding of the type of flight activity (e.g., recreational, official, or business). Obtain permits from relevant authorities before flying. If necessary, consult with local legal professionals for detailed definitions and explanations of flight activity types.
- When using the aircraft for filming, respect the privacy of others. It is strictly forbidden to use this product for any unauthorized surveillance activities, including but not limited to monitoring of individuals, groups, events, performances, exhibitions, or buildings.
- Please note that recording or photographing others, groups, events, performances, exhibitions, etc., without legal authorization may violate copyright, privacy rights, or other lawful rights of others. Therefore, it is essential to thoroughly understand and comply with local laws and regulations before use.

2.3 Flight Environment Requirements

- Avoid flying in adverse weather conditions such as strong winds, snow, rain, heavy fog, sandstorms, extreme cold, or high temperatures. The maximum allowable wind speed during takeoff and landing is fresh breeze.
- Ensure the aircraft takes off from and lands on open, unobstructed, and flat ground. Keep a safe distance from crowds, surrounding buildings, trees, etc., and control the aircraft within visible range to ensure flight safety.
- Fly at altitudes below 5000m.
- Due to poor lighting conditions, GNSS signal loss, narrow spaces, etc., some functions of the aircraft may be restricted. Always be aware of the surrounding environment and maintain safe control of the aircraft.
- For night flights, please be sure to choose open and uninhabited areas, install and turn on the strobe (beacon), and ensure the downward lights are on during landing for safety.
- Avoid taking off or landing on moving platforms such as moving vehicles, boats, etc.
- Avoid taking off or landing on sandy surfaces to prevent raised dust affecting the lifespan of the motors.
- The performance of the intelligent battery is influenced by environmental temperature and air density. Use the aircraft in environments ranging from 0°C to +40°C.
- When using the aircraft in disaster-stricken areas after events such as fires, explosions, lightning, storms, tornadoes, heavy rain, floods, earthquakes, sandstorms, etc., pay special attention to the safety of takeoff and landing points and changes in the surrounding environment. Prioritize personal safety.
- Stay away from steel structures, iron mines, etc., to avoid interference with the aircraft's compass.

2.4 Wireless Communication Requirements

- Stay away from areas with strong electromagnetic interference, such as radar stations, microwave stations, mobile communication base stations, drone interference devices, etc., and maintain a distance of at least 200 meters.

- Exercise caution when flying near electromagnetic interference sources and continuously monitor and assess the stability of the remote controller's video transmission signal and image. Common sources of electromagnetic interference include, but are not limited to, high-voltage transmission lines, high-voltage substations, mobile communication base stations, and TV broadcast signal towers. If significant interference occurs in these places during flight operations, the aircraft may not be able to fly normally, so return and landing should be done promptly.
- Choose open and spacious areas or high grounds for flying. Tall mountains, rocks, urban structures, and forests may obstruct the GNSS signal and the aircraft's video transmission signal.
- It is recommended to turn off unnecessary Wi-Fi and Bluetooth devices in the vicinity to avoid interference with the remote controller signal.

2.5 Declaration of Maximum Take-off Mass

During flight operations, the actual takeoff weight of the aircraft should not exceed the Maximum Takeoff Weight (MTOW) declared for the aircraft. Exceeding this limit may result in aircraft safety incidents. For detailed data, please refer to Appendix A "A.1 Aircraft".
The actual takeoff weight of the aircraft is composed of the aircraft weight and the payload weight. Before mounting the payload, ensure that the payload weight is within a reasonable range.

Remarks

- The aircraft weight consists of the airframe weight, gimbal camera weight, propeller weight, and intelligent battery weight. Different models of gimbal cameras may have differences in weight. If the aircraft is equipped with a different model of gimbal camera, reweigh the aircraft to determine the updated weight data.
- Payloads include functional module mounts and material mounts, among others. When users add payloads to the aircraft, it is essential to reevaluate the actual takeoff weight of the aircraft through weighing.
- The payload weight should adhere to the following rule: Payload Maximum Weight ≤ Maximum Takeoff Weight - Aircraft Weight.

2.5.1 Gravity Center Limitation

When users are mounting payload to the aircraft, the payload should not exceed the gravity center limitation in order to not affect the safety functions of the aircraft. In other words, there is limitation on the payload location. The suggested mounted location is as follows:

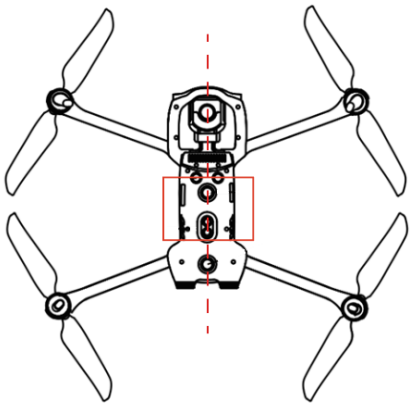

Fig 2-1 Recommended mounted area (bottom view)

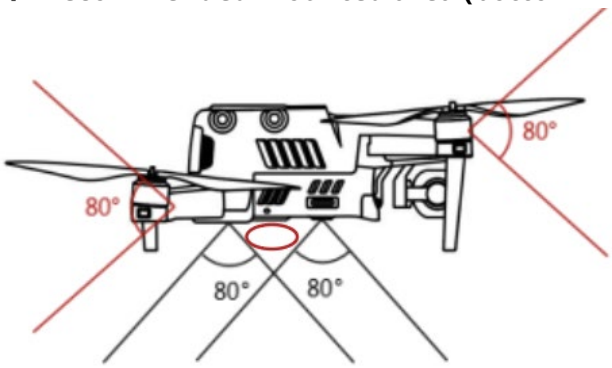

Fig 2-2 Recommended mounted location (not affecting the observation range)

Note

- To keep the vision and the performance of the aircraft solid, it is recommended that when users are mounting payload, the mounting point should be located at the center line of the aircraft and should not be beyond the area bracketed in the fig 2-1. Meanwhile, the size of the mounted payload, as circled in fig 2-2, should not be too big that it will extend to the observation range. Otherwise, the normal flight of the aircraft will be affected.

2.6 Obstacle Avoidance System

2.6.1 Introduction to the Visual Perception System

The aircraft adopts a visual perception system design to achieve excellent omni-directional obstacle avoidance performance, ensuring precise positioning and safe flight of the aircraft. The visual perception system is a vision-based positioning system that perceives obstacles and obtains aircraft position information through visual image ranging. The aircraft's visual perception system is located at the front, rear, top, and bottom of the fuselage. The visual perception system of the aircraft installed on the front, rear, left, right, top, and bottom of the

fuselage with the "dual pinhole lens" structure, for achieving omni-directional visual obstacle avoidance for the aircraft.

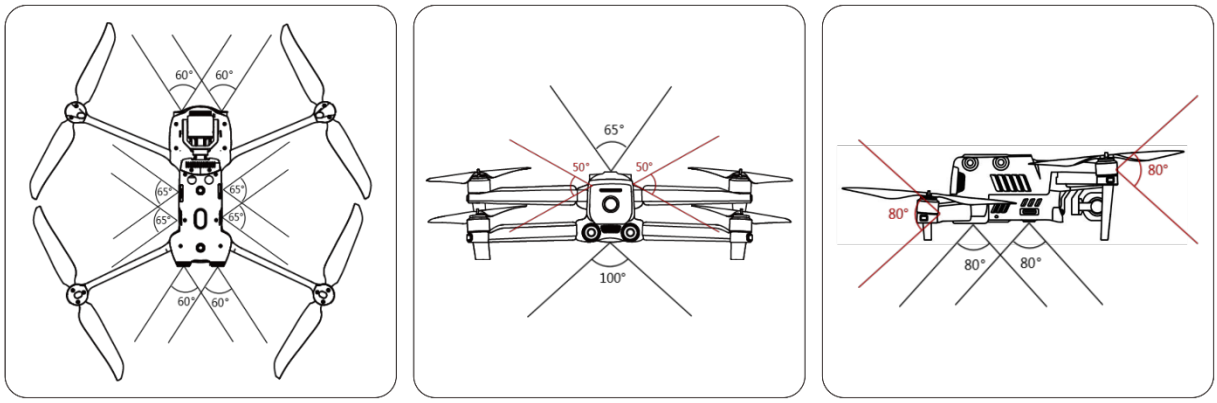

Fig 2-3 Aircraft Visual Perception Range

⚠ Warning
● When using the aircraft for flight, avoid obstructing the lenses of the visual perception system. Doing so may impact the performance of the aircraft's visual obstacle avoidance and could lead to flight accidents. ● There is a certain blind spot in the diagonal area of the visual obstacle avoidance system. When flying manually, please always pay attention to the surrounding environment and app prompts to ensure safety.
Important
● The visual perception systems in the front, rear, and bottom of the aircraft can also use ultrasonic sensors to calculate the aircraft's height and obtain position information through image analysis. ● The performance of visual obstacle avoidance is influenced by environmental light and surface texture of objects. The visual obstacle avoidance system is not 100% reliable. When flying with the visual obstacle avoidance system activated, always pay attention to the live video feed on the Autel Explorer App.

2.6.2 Visual Positioning Function

The aircraft supports visual positioning function in the absence of GNSS signals, providing flight positioning capabilities when GNSS signals are poor or lost, ensuring the safe flight of the aircraft. In the presence of GNSS positioning information, the visual localization function provides auxiliary positioning information to enhance the accuracy of the aircraft's positioning.
In situations where there is neither GNSS signal nor adequate conditions for the visual perception system, leading to the simultaneous failure of both GNSS signal and visual localization, the aircraft will initiate ATTI mode.

⚠ Warning

- If you lack extensive flight experience, try to avoid flying beyond visual range.
- When relying on visual localization for flight, avoid flying near surfaces such as water or snowy areas with mirror-like reflections. In poor GNSS signal conditions, ensure the aircraft is flying in well-lit environments with clear object surface textures.

Tips

When the aircraft is already in flight and the GNSS signal disappears or weakens, the remote controller will provide the following warning prompts：

- If the takeoff point is inaccurate: The Autel Explorer App will display a floating window with the alert "GPS signal weak. There may be some deviation between the landing point and the Home point. Please pay attention while the aircraft is landing." and the remote controller will simultaneously emit a voice prompt.
- If the aircraft is in ATTI mode: The Autel Explorer App will display a floating window with the alert "ATTI mode, fly with caution." and the remote controller will simultaneously emit a voice prompt.

2.6.3 Visual Obstacle Avoidance Function

The visual obstacle avoidance function is suitable for well-lit conditions, and the obstacles encountered in the flight path should not be too sparse (such as sparse iron wire mesh, small branches along the outer edges of trees, etc.). Additionally, due to inertia, it is necessary to control the aircraft to brake within an effective distance. The flight control system will limit the attitude angle of the aircraft during acceleration to not exceed 33°, and the maximum flight speed is less than 10 m/s. For more details, please refer to “6.4 Settings Interface” in Chapter 6.

Warning

- The obstacle avoidance function will not be enabled when the aircraft is in the Ludicrous mode.

2.6.4 Precautions for Obstacle Avoidance System Usage

The measurement accuracy of the visual perception system is easily affected by factors such as light intensity and object surface texture. Exercise caution when using the system in the following scenarios:

- Solid-color surfaces (such as pure white, pure black, pure red, pure green) and low-texture scenes.
- Surfaces with strong reflections or reflections.
- Surfaces of moving objects (such as crowds of people, swaying reeds in the wind, bushes, grass, etc.).
- Water surfaces or surfaces of transparent objects.
- Scenes with rapid and intense changes in lighting or scenes directly illuminated by strong light sources.

- Extremely dark surfaces (light intensity less than 15 lux) or extremely bright surfaces.
- Small obstacles (such as wires, power lines, branches, etc.).
- Dirty lenses (such as water droplets, fingerprints, etc.).
- Scenes with low visibility (such as heavy fog, heavy snow, etc.).
- Low-altitude flights below 2 meters with excessive flight speed.

Remarks

- Please be aware that the visual perception system of the aircraft is highly likely to fail in low-light conditions, such as nighttime, resulting in the loss of visual obstacle avoidance capability.
- To avoid interference with the ultrasonic positioning system, do not use ultrasonic devices operating at 40kHz, such as ultrasonic rangefinders, fault detectors, cleaners, or welders.

2.7 Auto Return Home

The aircraft is equipped with an automatic return home function. If the GNSS signal is good, when the auto return home conditions are triggered, the aircraft will automatically return to the home point and land to prevent accidents.
The aircraft provides users with three ways to activate the auto return home: manual activation, low battery activation, and behavior activation.

Remarks

- Home Point: The landing point when the aircraft executes an automatic return home. In the Autel Explorer App, you can set the home point of the aircraft to either the "Aircraft Current Position" or the "Remote Controller Current Position." For more details, please refer to “6.4 Setting Interface” in Chapter 6.
- If the return home point is not set in the Autel Explorer App, the aircraft will default to the takeoff point as the return home point.
- During the auto return home process, the control functions of the remote controller for the aircraft will be disabled. At this time, you can pause or exit the auto return home by pressing or long-pressing the pause button "" on the remote controller for 2 seconds to regain control of the aircraft. For more details, please refer to “4.11.2 Take-off/Return-to-Home Button and Pause Button" in Chapter 4.

Warning

- If the GNSS signal is poor, the auto return home function cannot be activated.
- If the obstacle avoidance system is not enabled during auto return home, the aircraft will not be able to automatically avoid obstacles.
- If the landing point for auto return home is not suitable for the aircraft to land (such as uneven ground or presence of a crowd), please exit the auto return home first and then manually control the aircraft to land.

2.7.1 Manual Activation of Auto Return Home

During flight, users can manually activate the auto return home by long-pressing the return home button "" on the remote controller for 2 seconds.

2.7.2 Low Battery Activation of Auto Return Home

During flight, to prevent unnecessary risks due to insufficient battery power, the aircraft will intelligently assess whether the current battery level is sufficient based on the aircraft's current position.
If the current battery level is only sufficient for the return home process, the Autel Explorer App will display a pop-up alert saying "The system calculates that your current charge is only enough to return to the Home Point. 10s after the automatic return (no longer remind this message after cancellation)." to remind the user whether to execute the low battery auto return home. If the user chooses to execute or does not perform any operation within 10s, the aircraft will enter low battery auto return home after 10s.
When the battery level of the aircraft reaches the set threshold (default is 25%), the Autel Explorer App will display a low battery warning and activate the automatic return of the aircraft. If the user regains control of the aircraft, when the battery level reaches 15% (default), the Autel Explorer App will display a critically low battery warning, and the aircraft will automatically land in place. In case of emergency, users can press the pause button "" on the remote control to temporarily halt the landing and manually control the aircraft to land at the nearest safe location.

Tips

- The threshold of low battery warning and critically low battery warning can be set in the Autel Explorer App. For more details, please refer to "6.4 Settings Interface" in Chapter 6.
- When the aircraft's battery level reaches the preset low battery warning threshold (default is 25%), if the horizontal distance from the aircraft to the return point is less than 50 meters (150 feet), the aircraft will not execute the automatic return home process.

Warning

- When the aircraft triggers low battery auto return home, the auto return home process should not be canceled. Otherwise, the aircraft may not have enough power to return to the home point.
- It is not recommended to let the aircraft enter the severe low battery landing process. To avoid the landing area being unsuitable for the aircraft to land and causing damage to the aircraft.
- When the Autel Explorer App displays relevant warning prompts, follow the corresponding instructions immediately.

2.7.3 Behavior Activation of Auto Return Home

During the execution of a flight mission, setting the completion action as "Go Home" will activate the auto return home after completing the mission. Setting the loss of connection action as "Go Home" will activate the auto return home when the remote controller and the aircraft disconnect for 4 seconds. For details, please refer to “6.8 Mission” in Chapter 6.
During Intelligent Photo mode flight, when the remote controller and the aircraft disconnect for 4 seconds, the remote controller will display the message "Remote controller not connected to the aircraft," and the aircraft will activate the auto return home.

Tips

- During the execution of a flight mission, the default loss of connection behavior in the Autel Explorer App is set to "Continue Mission."
- Within the 4 seconds of the aircraft and the remote controller disconnecting, the aircraft will continue to decelerate, attempting to reconnect with the remote controller. If the connection is not successfully restored, the loss of connection auto return home will be activated.
- During the loss of connection auto return home process, if the aircraft re-establishes a connection with the remote controller, the aircraft will continue to execute the auto return home.

2.7.4 Auto Return Home Mechanism

Table 2-1 Auto Return Home Mechanism

Aircraft Distance Triggering Return Home	Return Home Mechanism
Distance to Home Point ≤ 50 meters	If the current aircraft altitude is below 25 meters, it will climb to 25 meters and return. If the current aircraft altitude is above 25 meters, it returns at the current altitude.
Distance to Home Point > 50 meters	If below the set return home altitude, it will climb to the return home altitude and return. If above the set return home altitude, it returns at the current altitude.

Remarks

- Home Point: The return point set for the aircraft in the auto return home settings.
- Aircraft distance refers to the horizontal distance from the aircraft to the Home Point.

2.7.5 Auto Return Home Obstacle Avoidance Process

When the obstacle avoidance system is enabled and the lighting conditions allow the visual perception system to function, the aircraft will implement obstacle avoidance during the auto return home process as follows:

- During the flight, when triggering the automatic return due to loss of connection, low battery, or manually activating the automatic return, if obstacles are detected in front of the aircraft, the aircraft will automatically come to a stop, and it will ascend automatically to avoid the obstacles until it can resume normal flight over them.

Important

- During obstacle avoidance, if the aircraft's ascent height reaches the maximum height limit and obstacle avoidance is not achieved, the aircraft will hover in place until triggering severe low battery landing. In this situation, take manual control of the aircraft in advance.
- In flight missions, if the obstacle avoidance mode is set to "Disabled," the aircraft will not have obstacle avoidance capabilities.
- In Intelligent Photo mode, the aircraft will automatically brake and hover in place when encountering obstacles.

2.7.6 Landing Protection Function

When the landing protection function is enabled, the aircraft will check whether the ground conditions are suitable for landing before descending. For more details, please refer to "6.4 Settings Interface" in Chapter 6.

During the auto return home process, when the aircraft reaches above the home point, if the landing protection function is enabled, the aircraft will execute the following strategies:

1. If the landing protection function detects that the ground is suitable for landing, the aircraft will descend directly.
2. If the landing protection function detects that the ground is not suitable for landing (such as uneven terrain or water below), the aircraft will hover, prompt in the Autel Explorer App for user action, and only start descending when triggering severe low battery landing, which cannot be canceled by the user.
3. If the landing protection function cannot detect the ground conditions, the aircraft will descend to 1.2 meters above the ground and directly enter the assisted landing process.

Remarks

- Assisted Landing: During the landing process, when the aircraft reaches a height of 1.2 meters above the ground, it will automatically descend slowly without the need for the user to pull down the throttle stick.
- Before entering assisted landing, users should ensure that the landing point is suitable for the aircraft to land.

2.8 Rebuilding of the C2 link

To ensure the safety and controllability of flight behavior, the EVO II RTK Series V3 aircraft will continuously attempt to reestablish the C2 link with the ground control station (remote controller) after losing the C2 link. In practice, this process is divided into the following stages:

- Within the first 4 seconds of disconnection, the aircraft will automatically decelerate and attempt to restore the C2 link. If the connection is restored within 4 seconds, control of the aircraft will be returned to the remote controller.
- If the connection cannot be reestablished within 4 seconds, the aircraft will automatically trigger the loss of connection behavior, and the aircraft will automatically execute relevant flight controls based on the configured loss of connection behavior.
- During the execution of the loss of connection behavior, the aircraft will continue attempting to reestablish the connection. If the C2 link is reestablished with the remote controller during this process, the remote controller will lose control of the aircraft. To regain control, the user must exit the loss of connection behavior by long-pressing the pause button "" on the remote controller for 2 seconds.

Tips

- During the flight, as long as the aircraft and remote controller can communicate normally, the C2 link will be maintained continuously.
- If decoding errors persist for a certain duration, leading to communication failure, the C2 link will be disconnected, and the aircraft will enter a reconnecting state.
- The loss of connection behavior for the EVO II RTK Series V3 aircraft includes two modes: “Go home”, “Resume”.
- After losing the C2 link, the EVO II RTK Series V3 aircraft will display "Remote controller and the aircraft disconnected" warning message (in red) in the status notification bar of the Autel Explorer App, and the remote controller will simultaneously emit a voice prompt.

2.9 Flight Restrictions and Unlocking

Important

- Before flying, please strictly adhere to local laws and regulations and carefully plan the airspace for flight.

2.9.1 Geofence System

Autel Robotics has developed a geofence system for its drones to ensure safe and legal flights. This system can dynamically update airspace restriction information worldwide. In different restricted zones, the drone's flight functions will be restricted to varying degrees. The geofence system also supports unlocking restricted zones. If users need to execute a flight mission in a specific restricted zone, they can obtain legal authorization for unlocking. The drone will then lift the relevant flight restrictions within the authorized period.

The geofence system does not necessarily align with local laws and regulations. Before each flight, users must independently inquire about and understand local laws, regulations, and regulatory requirements, taking responsibility for their flight safety.
The EVO II RTK Series V3 aircraft is equipped with a built-in geofence system in the flight control system. Before each flight, ensure that the remote controller can connect to the internet to automatically update airspace restriction information, which will be synchronized to the drone. During flight, relevant airspace restriction information will be displayed in real-time on the Autel Explorer App to ensure the drone's safe and legal flight.

Tips

- Due to the inherent delay in information retrieval, the airspace restriction information of the geofence system may not completely align with the latest local laws and regulations. All information should be based on local laws and regulations.
- For temporary airspace control, Autel Robotics will promptly obtain the corresponding regulatory notices and upload the relevant airspace restriction information to the geofencing system. Users are required to synchronize and update the flight airspace restriction information when conducting flights in the relevant areas.

2.9.2 Restricted Zones

In the geofence system, flight-restricted zones are categorized into four types: No-Fly Zone, Altitude-Limited Zone, Warning Zone, and Unlocked Zone. The Autel Explorer App provides different prompts based on the zone type.

Table 2-2 Flight Restrictions in Restricted Zones

Restricted Zone	Flight Restriction Explanation
No-Fly Zone (Displayed in red on the map)	Separated into Permanent No-Fly Zones and Temporary No-Fly Zones. Permanent No-Fly Zones: Factory-installed in the geofence system, regularly updated. Temporary No-Fly Zones: Added by Autel Robotics in the geofence system backend. Update Method: The remote controller automatically fetches the no-fly zone update information and pushes it to the aircraft. Flight Restriction: The aircraft cannot take off or fly in the current area. If the user obtains authorization from the relevant authorities in the area, they can contact Autel Robotics to request unlocking.
Altitude-Limited Zone (Displayed in gray on the map)	Autel Robotics only provides a method for altitude limitation, and users must set the altitude limit themselves. Update Method: Users need to manually enable altitude restrictions and set the limit value in the Autel Explorer App based on the legal requirements of the current country or region. For more details, please refer to “2.10 Altitude and

	Distance Limits" in this chapter and "6.4 Settings Interface" in Chapter 6.
Warning Zone (Displayed in yellow on the map)	Factory-installed in the geofence system, regularly updated. Factory-installed in the geofence system, regularly updated. Update Method: The remote controller automatically fetches the warning zone update information and pushes it to the aircraft. Flight Restriction: When flying in a warning zone, the aircraft's flight functions are not restricted (but must comply with local regulations).
Unlocked Zone (Displayed in blue on the map)	Users, with valid approval, can unlock a No-Fly Zone, allowing legal flight in the unlocked area for the specified validity period.

Tips

In the Autel Explorer App, tapping on each no-fly zone on the map will prompt the geofence information of each no-fly zone:

- No-fly zone: area name, area level (no-fly zone), affiliated area (prefecture-level city), no-fly time (only temporary no-fly zone display).
- Height restriction zone: area name, area level (height restriction zone), height restriction (AGL height restriction from the ground), affiliated area (prefecture-level city).
- Warning zone: area name, area level (warning zone), height restriction (AGL height restriction from the ground), affiliated area (prefecture-level city).
- Unlocked zone: area name, area level (unlocked zone), height restriction (AGL height restriction from the ground), affiliated area (prefecture-level city), validity period.

Remarks

- Before conducting a flight, users must understand the aircraft height restrictions in their area and set them correctly in the Autel Explorer App.
- Please note that it is not recommended to fly across adjacent areas with different legal height restrictions. The height limit set by the user is only valid for the area where the take-off point is located, and cannot guarantee compliance with the relevant regulations of the cross-area. Users should adjust the corresponding height limit in time when flying across areas.

The aircraft has a certain initial speed when flying in the air. To prevent the aircraft from mistakenly entering the no-fly zone (when not lifted) and the warning zone, the geofence system sets a buffer zone with a horizontal distance of 250 m and a vertical distance of 50 m outside the boundaries of the no-fly zone and warning zone.

Table 2-3 Buffer Zone Description

Buffer Zone Type	Buffer Zone Description

Buffer zone of the no-fly zone	When the aircraft not lifted flies towards the no-fly zone from the outside: When the aircraft touches the boundary of the buffer zone, the Autel Explorer App will display a warning alert says "Approaching a Flight Restricted Area" and the aircraft will automatically start to decelerate and eventually brake and hover within the buffer zone.
Buffer zone of the warning zone	When the aircraft flies towards the warning zone from the outside: The aircraft can fly directly into the warning zone, during which the aircraft is not restricted. When the aircraft touches the boundary of the buffer zone, the Autel Explorer App will display a warning alert says "The aircraft is close to the warning zone. " and after enter the warning zone, the Autel Explorer App will display " The aircraft is in the warning zone, please fly with caution. " to remind users to be cautious.

Remarks

- If the aircraft not lifted mistakenly enters the no-fly zone in the absence of GNSS signal, the aircraft will automatically land after regaining the GNSS signal, and during the landing process, the throttle joystick does not work, but users can control the aircraft to move horizontally.
- When the aircraft hovers in place in the buffer zone, users can control the aircraft to exit the buffer zone along the normal direction of the buffer zone boundary.

When conducting a flight in the unlocked zone, if within the airspace and valid time of the lifting authorization, the aircraft can fly normally; once it exceeds the airspace and valid time of the lifting authorization, the aircraft will execute the airspace restriction operation of the current area.

2.9.3 Import UGZ

The aircraft supports the UAS Geographical Zones (UGZ) import function, allowing users to obtain the restricted flight zone data file of their country or region and upload it to the flight control system of the aircraft. When the aircraft approaches the relevant airspace during flight, it will execute corresponding status responses (including alerts, deceleration, etc.) to ensure flight safety.

Tips

- The UGZ import function supports importing JSON-type no-fly zone data files. Users can import no-fly zone data files published by the aviation management department.

- Operation method: Copy the JSON file to the root directory of the remote controller, enter the Intelligent Photo mode, on the map interface of the Autel Explorer App, tap "" > "Import Geo-fence" on the right side. Follow the page instructions for relevant operations.

2.9.4 Unlocking No-Fly Zones

To apply for unlocking a specific airspace within a no-fly zone, prepare the following information in advance according to your flight plan:

1. Identity and contact information of the applicant.
2. Unlock permit: a scanned copy or image of the valid permit for the flight application issued by local authorities (local public security bureau, aviation management department, or any other relevant organization/agency).
3. Unlocked zone: a cylindrical area. It includes the following information:
   - Name of the unlocked zone.
   - Coordinates of the center point of the flight airspace plane (latitude and longitude, with 6 decimal places).
   - Radius of the flight airspace plane (in meters, with 2 decimal places).
   - Flight altitude (in meters, with 2 decimal places).
4. Unlock date: Enter the unlock date according to the valid permit. The date is recommended to be accurate to day/hour/second.
5. Aircraft S/N (Serial number): Multiple serial numbers can be applied at once.
6. Autel account of UAS operator: Multiple accounts can be applied at once.

Log in to the official website of Autel Robotics at www.autelrobotics.com/service/noflight/, enter the relevant information, and complete the waiver application.

After the unlocking application is approved, you will obtain an unlock permit. The permit contains the aircraft serial number, UAS operator account, and unlocked zone (including the validity period).

Tips

- After submitting the lifting application, the approval will be completed within 24 hours, and the lifting will be completed within 48 hours.

2.10 Altitude and Distance Limits

The altitude limit will restrict the maximum flight altitude of the aircraft; the distance limit will restrict the maximum flight radius distance of the aircraft (with the take-off point as the center). Users can set the altitude and distance limits in the Autel Explorer App to ensure the safe flight of the aircraft. For more details, please refer to “6.4 Settings Interface” in Chapter 6.

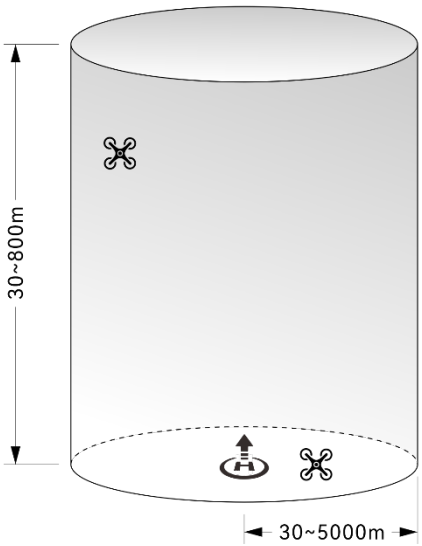

Fig 2-4 Altitude and Distance Limitation Diagram

Tips

- In the Autel Explorer App, the allowable range for altitude restriction is 30 ~ 800 m, and the allowable range for distance restriction is 30 ~ 5000 m. During actual flight, the set maximum altitude limit should not exceed the altitude restricted by local laws and regulations, such as the maximum flight altitude of aircraft in mainland China, the United States, the European Union and other countries and regions should not exceed 120 meters or 400 feet.
- When setting the maximum altitude limit, the rationality of the return altitude should be fully considered, and the return altitude should not exceed the maximum altitude limit.
- The return altitude should be set to be higher than the highest obstacle in the flight area.

2.11 Aircraft Calibration

2.11.1 Compass Calibration

The compass (magnetometer) has been calibrated when the aircraft leaves the factory, and users usually do not need to calibrate it.
If the Autel Explorer App prompts a compass error message, or the flight direction of the aircraft is inconsistent with the control input direction of the remote control, or the flight location deviates too much from the calibration location, please calibrate it according to the following steps.

Important

- The compass is very sensitive to electromagnetic interference, which can cause compass errors and a decrease in flight quality.
- Please choose an open outdoor area for calibration.

- Please stay away from strong magnetic field areas or large pieces of metal during calibration, such as magnetic ore, parking lots, construction areas with underground steel bars, near underground or overhead power transmission lines, etc.
- Please do not carry ferromagnetic materials or metal objects with you during calibration, such as mobile phones, watches, etc.
- During the calibration process, please stay away from charged objects and keep the aircraft 1.5 meters above the ground.
- During the calibration process, please do not turn off the power of the aircraft or start the motor.

Table 2-4 Compass Calibration

Step	Operation	Diagram
1	After turning on the aircraft and remote control, tap "⚙" > "Flight Control" > "Compass Calibration" > "Start Calibration" one by one. When the calibration process starts, When the calibration process begins, the rear arm light of the aircraft turns yellow and blinks.	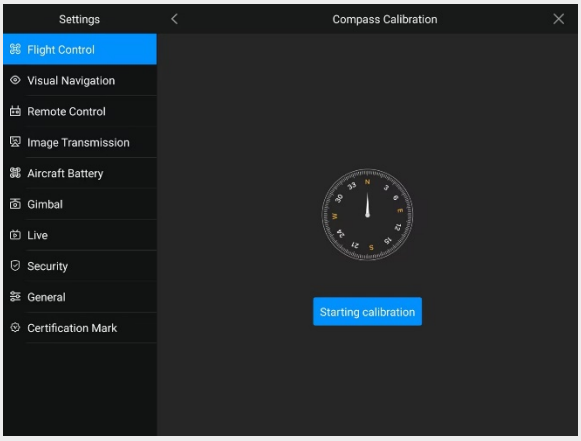
2	Hold onto the aircraft to keep it in a horizontal position. Rotate horizontally 360° until the rear arm light of the aircraft turns green and blinks.	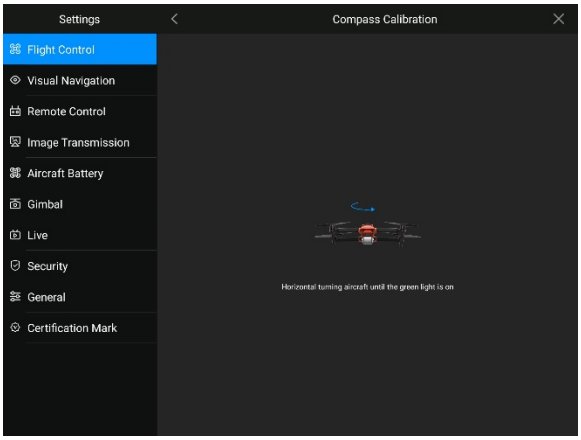

3	Hold onto the aircraft to keep it in a vertical position with the nose pointing upward. Rotate horizontally 360° until the rear arm light of the aircraft turns green and blinks.	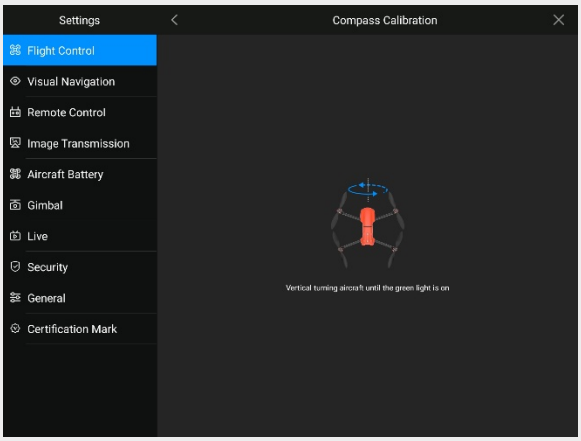
4	Hold onto the aircraft, positioning the nose to the left and the side facing downward. Rotate horizontally 360° until the rear arm light of the aircraft turns green and is always on.	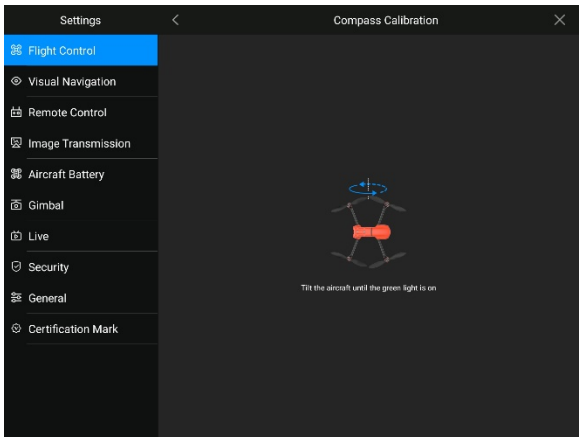

Tips

- Please follow the calibration steps as instructed on the Compass Calibration page of the Autel Explorer App.
- If the calibration fails, the rear arm light of the aircraft will turn solid red. In this case, repeat the above steps.
- If the compass still cannot function properly after calibration, move the aircraft to a different location and calibrate again.

2.11.2 IMU Calibration

The Inertial Measurement Unit (IMU) is calibrated during the manufacturing of the aircraft and typically does not require user calibration. However, if there are abnormal acceleration and angular velocity readings, follow the steps below for IMU calibration.

Important

- Follow the prompts on the IMU calibration page in the Autel Explorer App to position the aircraft and ensure it remains in a stationary state.
- Place the aircraft on a flat surface and refrain from moving, turning off, or restarting the aircraft during the calibration process.

- The gimbal will be inactive during the IMU calibration process.

Table 2-5 IMU Calibration

Step	Operation	Diagram
1	After turning on the aircraft and remote control, tap "⚙" > "Flight Control" > "IMU Calibration" > "Start Calibration" one by one. When the calibration process begins, the rear arm light of the aircraft turns green and blinks.	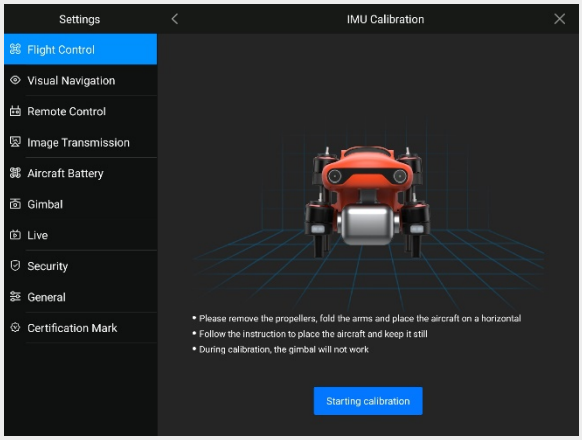
2	Fold the arms of the aircraft and place it horizontally on the ground until the App prompts you to proceed to the next step.	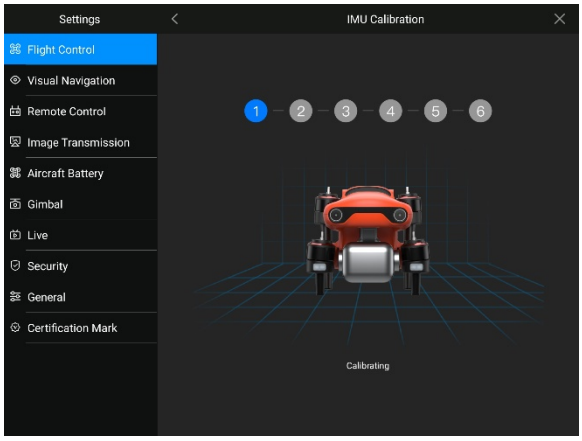
3	Flip the aircraft 180°, placing it with the belly facing up on a flat surface, until the App prompts you to proceed to the next step. Please be careful to protect the lens on the back of the aircraft during this process.	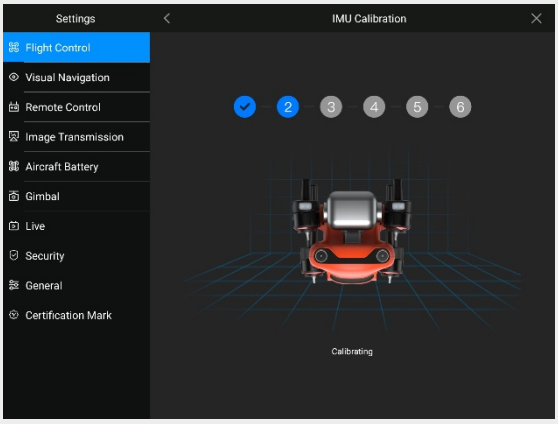

4	Place the left side of the aircraft flat on the ground until the App prompts you to proceed to the next step.	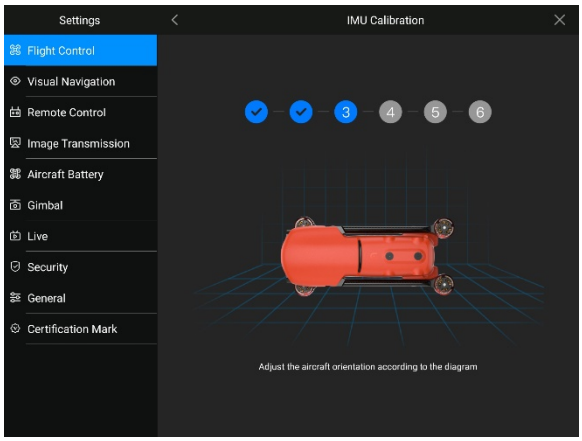
5	Place the right side of the aircraft flat on the ground until the App prompts you to proceed to the next step.	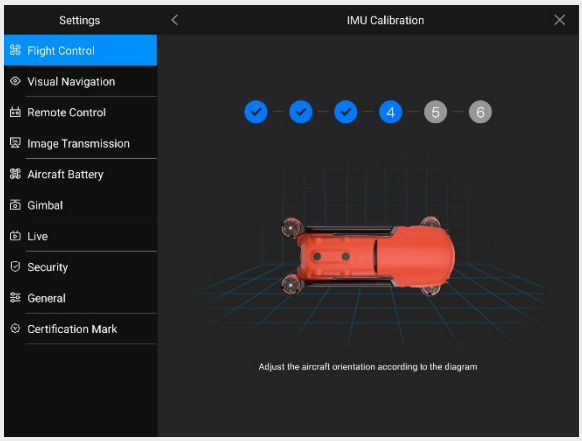
6	Place the nose of the aircraft flat on the ground until the App prompts you to proceed to the next step. Be careful not to knock the front visual sensor.	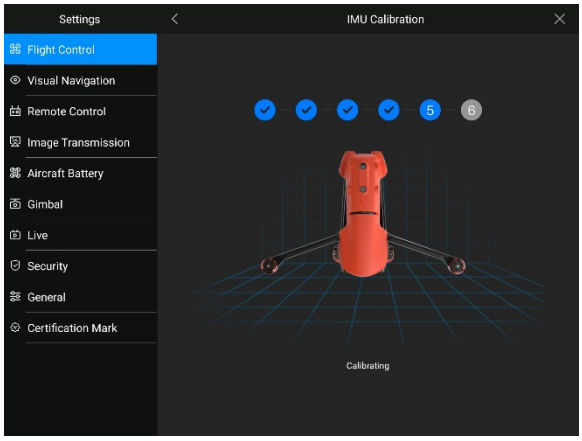
7	Fold the arms of the aircraft and place it with the nose facing upward on the ground u ntil the App prompts that the calibration is successful. Please be careful to protect the lens on the rear of the aircraft during this process.	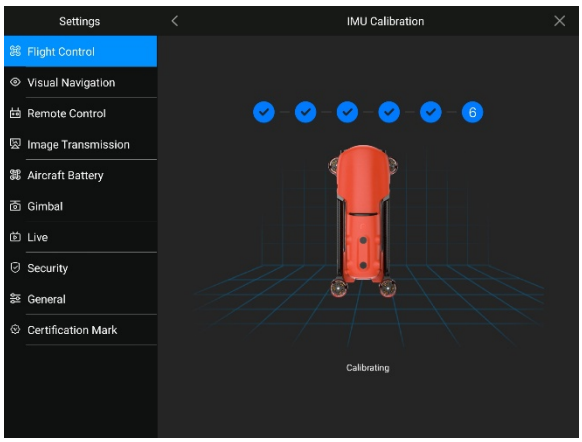

Tips

- If the calibration fails, the App will prompt you. In this case, you should repeat the above steps.

2.11.3 Gimbal Auto Calibration

The gimbal is calibrated during the manufacturing of the aircraft and typically does not require user-initiated auto-calibration. However, if there are abnormal gimbal rotation angles, follow the steps below for automatic calibration.

Table 2-6 Gimbal calibration

Step	Operation	Giagram
1	Place the aircraft on a flat surface, and after turning on both the aircraft and the remote control, keep the aircraft in a stationary state. On the flight page of the Autel Explorer App, tap " ⚙ " > "Gimbal" > "Gimbal Auto Calibration" > "Start Calibration" in sequence.	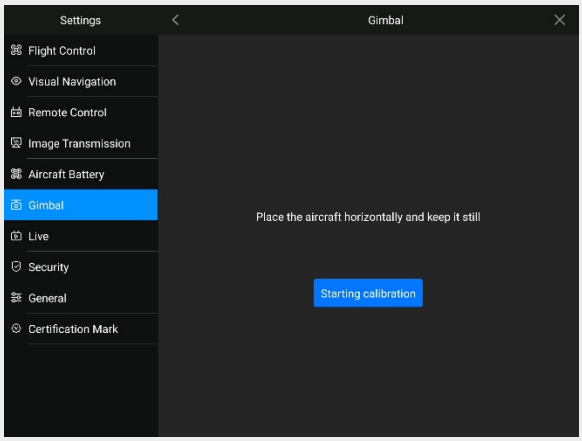
2	Wait, the screen prompts "Calibration successful," and then the gimbal automatically calibrates successfully.	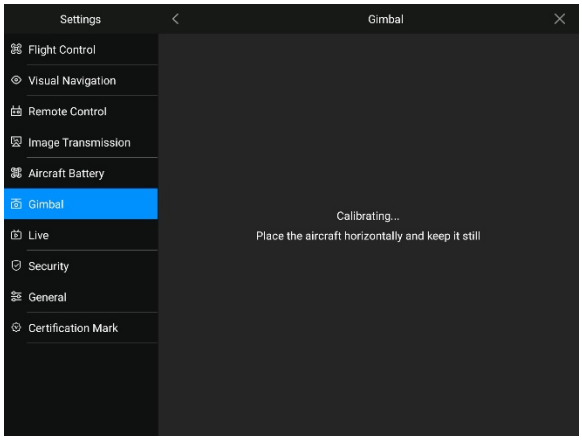

2.12 Emergency Propeller Stop in Flight

During flight, if the aircraft's motors experience power damage or failure (such as damaged or missing propeller blades, motor failure) resulting in the inability to control the aircraft normally, the emergency propeller stop function can be activated. Simultaneously, push the dual joysticks on the remote controller inward or outward to force the propeller blades to stop turning, allowing the aircraft to free-fall for a forced landing. This helps reduce potential damage to property and injuries to ground personnel caused by aircraft malfunctions.

In the event of a failure, users should attempt to maneuver the joystick to move the aircraft away from crowds or buildings, decrease the aircraft's altitude and horizontal speed, and then execute the emergency propeller stop function. For activating this function, please refer to “6.4 Settings Interface” in Chapter 6.

Important

- If the propellers are stopped when the aircraft has a certain initial velocity, the aircraft will follow a parabolic trajectory during free fall. Do not stop the propellers in this unpredictable scenario.
- After completing the forced landing, please contact Autel Robotics promptly for inspection of the power system.

2.13 Direct Remote Identification

The Direct Remote Identification (DRI) system allows the registration number of the unmanned aircraft system operator (Remote ID) to be uploaded to the system. During flight, the system broadcasts part of non-sensitive data such as the operator's registration number, unique serial number of the unmanned aircraft, timestamp, geographic location of the unmanned aircraft, altitude above ground or takeoff point, route measured clockwise from true north, ground speed of the unmanned aircraft, and the operator's geographic location (if available, otherwise, the geographic location of the takeoff point) in real-time to mobile devices within its broadcast range. This system effectively controls potential risks to public safety posed by unmanned aircraft during flight and provides effective information and data tools for the supervision of unmanned aircraft flights.
The EVO II RTK Series V3 aircraft supports the DRI system and uses Wi-Fi (Wi-Fi Beacon, 802.11n) for broadcasting. Enable the DRI system by configuring it in the Autel Explorer App.

Tips

- Operation path: On the flight interface of the Autel Explorer App, tap "⚙" > ”General” > ” Remote ID” and follow the on-screen instructions for relevant operations. For more details, please refer to “6.4 Settings Interface” in Chapter 6 to swap joystick modes.

2.14 Standard Flight Operation Process

2.14.1 Pre-flight Inspection Checklist

Before every flight operation, perform a comprehensive pre-flight check following these steps to ensure safe flight:

- Ensure the remote controller and aircraft have sufficient battery power, and the aircraft battery is securely installed with the battery unlock button in the locked position.

- Ensure the aircraft propellers are securely installed without damage or deformation, the motor and propeller surfaces are clean and free of foreign objects, and the propellers and arms are in fully extended positions.
- Ensure there are no foreign objects, dirt, or fingerprints on the lenses of the aircraft's visual cameras, gimbal camera, or supplementary lights, and they are not obstructed by mounts or other accessories on the aircraft.
- Confirm that the gimbal protective cover has been removed, and the gimbal's three-axis movements are normal.
- Ensure the microSD card is inserted into the aircraft, and the microSD card slot, USB-C interface and PSDK interface (when no mount) are covered with the rubber protective cover to maintain product protection.
- Confirm the stability of the remote controller antenna lock and extend it to the optimal angle.
- Place the aircraft in an open and level outdoor area, ensuring there are no obstacles, buildings, trees, etc. Stand at least 5 meters away from the rear of the aircraft.
- Ensure the aircraft powers on and is connected to the remote controller, and the aircraft motors and gimbal camera are functioning properly.
- Confirm that the aircraft, remote controller, etc., have been upgraded to the latest versions as prompted.
- Address all warnings and errors displayed on the Autel Explorer App.
- Enter the Autel Explorer App settings page to configure flight control parameters, obstacle avoidance systems, joystick modes, and other relevant flight safety parameters. Familiarize yourself with flight operations to ensure parameter settings meet your needs and guarantee flight safety.
- If multiple aircraft are flying simultaneously, maintain an appropriate aerial distance to prevent safety accidents.

2.14.2 Basic Flight Procedure

This aircraft provides three joystick modes: Mode 2 (USA), Mode 1 (China), and Mode 3 (Japan). Each mode has different control logic for the aircraft. The default mode is Mode 2, and users can switch modes in the Autel Explorer App based on their control preferences (refer to “6.4 Settings Interface” in Chapter 6 to swap joystick modes). The following are the basic flight operations:

1. Please refer to "2.14.1 Pre-flight Inspection Checklist" in this chapter for pre-flight preparations.
   - Place the aircraft in an open and level outdoor area, ensuring no obstacles are present. Stand at least 5 meters away from the rear of the aircraft.
   - Long-press the intelligent battery power button for 3 seconds to power on the aircraft, wait for the rear arm light to turn into slow green flashing (indicating normal status).
   - Long-press the remote controller power button for 3 seconds to turn on the remote controller.
2. Please refer to “4.10.3 Starting/Stopping the Aircraft Motor" in Chapter 4 to use the remote controller to start the aircraft and take off.
3. Please refer to “4.10.1 Stick Modes" and “4.10.2 "Setting Stick Mode" in Chapter 4 to carefully control the aircraft.
4. Please refer to "4.10.3 Starting/Stopping the Aircraft Motor" in Chapter 4 to land the aircraft and then turn off the motors.

2.15 List of Safeguard

Before flight, please know the following safeguard information, which helps you handle abnormal situations in a correct and safe way.

Table 2-7 List of Safeguard

No.	Safety Function	Refer To
1	Auto Return Home	"2.7 Auto Return Home" in this chapter
2	Emergency Propeller Stop In Flight	"2.12 Emergency Propeller Stop In Flight" in this chapter

Chapter 3 Aircraft

3.1 Aircraft Activation

When unboxing the product for the first time, you need to activate the EVO II RTK Series V3 aircraft before using it. By default, the aircraft is pre-paired with the remote controller at the factory. After turning on the aircraft and the remote controller, you will see an activation prompt in the Autel Explorer App. Please follow the steps in the Autel Explorer App to activate the aircraft.

Important

- Make sure that the remote controller is connected to the Internet before starting the activation process. Otherwise, activation may fail.
- If activation fails, please contact Autel Robotics After-Sales Support for assistance.
- For how to pair the aircraft with the remote controller, please refer to "4.9 Frequency Pairing With the Remote Controller" in Chapter 4.

3.2 Aircraft Components

The EVO II RTK Series V3 aircraft includes two models: the EVO II Pro RTK V3 aircraft and the EVO II Dual 640T RTK V3 aircraft. Apart from differences in the gimbal cameras, the other appearance features of two models are the same.

Tips

- This section displays the appearance features of EVO II Dual 640T RTK V3 aircraft.

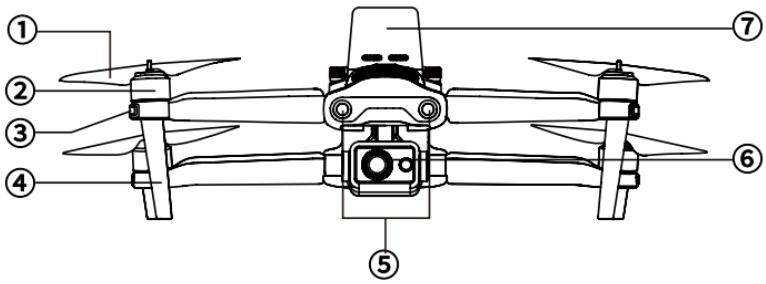

Fig 3-1 Aircraft Front View

Table 3-1 Aircraft Front View Details

No.	Name	Description
1	Propeller	Rotates in the air to generate thrust to propel the aircraft forward.

2	Motor	Used to drive the propeller to rotate.
3	Front Arm Light	Used to identify the nose direction of the aircraft.
4	Landing Gear	Used to support the aircraft to avoid damage to the bottom of the fuselage.
5	Forward Visual Sensing System	Used to sense the obstacles ahead and avoid the aircraft from colliding with them.
6	Gimbal Camera	Integrates multiple sensors for stable shooting or measurements during flight.
7	RTK module	Installed on the aircraft PSDK interface, it provides centimeter-level high-precision positioning for the aircraft. Users can also provide additional mounts for the fuselage through the expansion interface, such as loudspeakers, spotlights, strobe (beacon), etc.

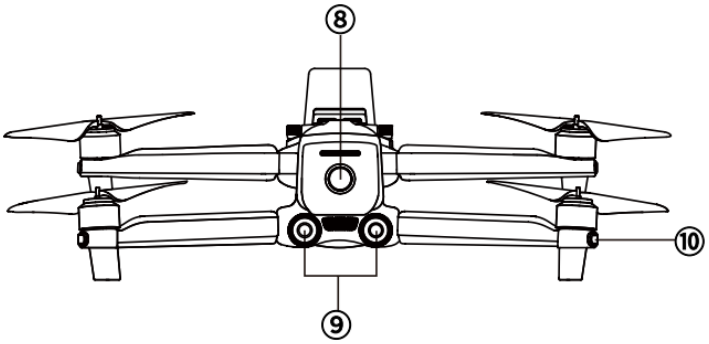

Fig 3-2 Aircraft Rear View

Table 3-2 Aircraft Rear View Details

No.	Name	Description
8	Power button	Press and hold the power button for 3 seconds to start the aircraft.
9	Rear Visual Sensing System	Used to sense the obstacles in the rear and avoid the aircraft from colliding with them.
10	Rear Arm Light	Used to display the current flight status of the aircraft.

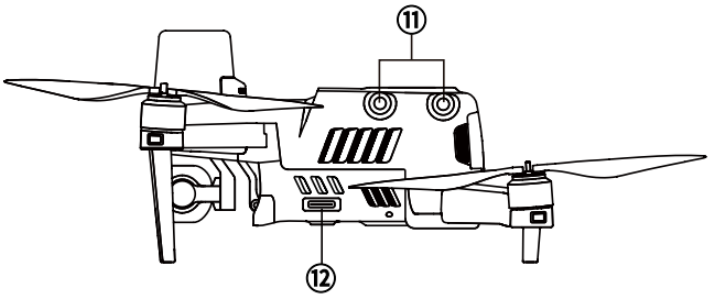

Fig 3-3 Aircraft Left View

Table 3-3 Aircraft Left View Details

No.	Name	Description
11	Left Visual Sensing System	Used to sense the obstacles in the left and avoid the aircraft from colliding with them.
12	microSD Card Slot	For inserting a microSD card.

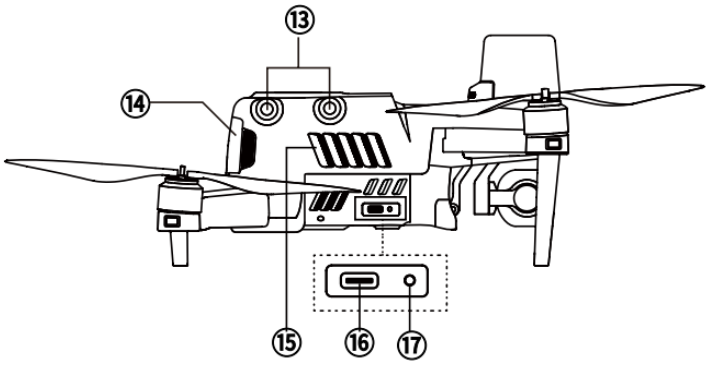

Fig 3-4 Aircraft Right View

Table 3-4 Aircraft Right View Details

No.	Name	Description
13	Right Visual Sensing System	Used to sense the obstacles in the Right and avoid the aircraft from colliding with them.
14	Smart Battery	Used to provide energy for aircraft operation.
15	Heat Dissipation Vent	An opening for expelling the heat generated during the flight of the aircraft.
16	USB-C Interface	Used to connect to a computer for firmware updating, debugging and data transferring.
17	Pairing Button	Long press the Pairing Button 3s to enter pairing mode.

⚠ Warning

- The USB-C interface of the aircraft is not available for charging. Please do not connect a charger to it. For aircraft charging, refer to "5.3.4 Charging the Smart Battery" in Chapter 5.

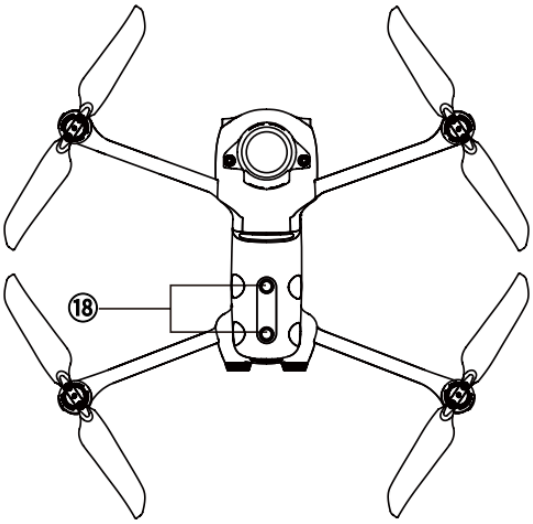

Fig 3-5 Aircraft Top View

Table 3-5 Aircraft Top View Details

No.	Name	Description
18	Upward Visual Sensing System	Used to sense obstacles above, and to the left and right of the aircraft and avoid collisions.

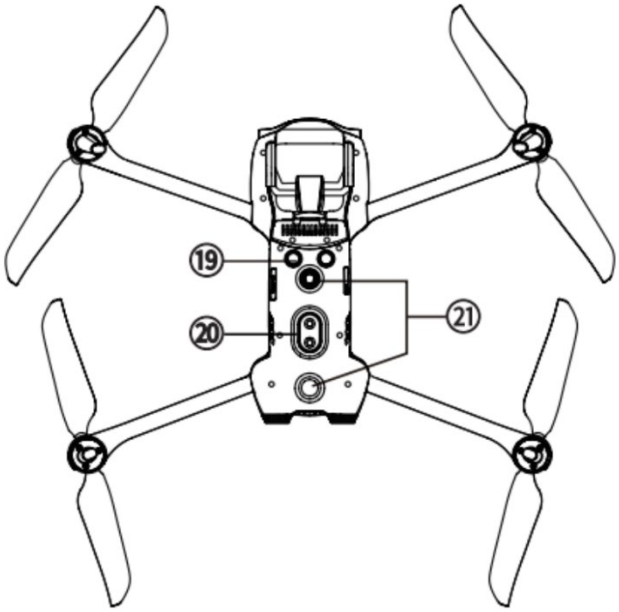

Fig 3-6 Aircraft Down View

Table 3-6 Aircraft Down View Details

No.	Name	Description
19	Ultrasonic Sensor	Used to sense obstacles beneath the aircraft, avoiding collisions with them.
20	Auxiliary Light	An LED auxiliary light. It is used to enhance the ambient brightness of the landing area during the landing process, improve downward visual sensing performance, and ensure the safe landing of the aircraft.
21	Downward Visual Sensing System	Used to sense obstacles below, and to the left and right of the aircraft and avoid collisions.

Warning

- The interfaces on both sides of the aircraft body are equipped with rubber protective covers, designed to protect the microSD card slot and USB-C interface. Please ensure that the rubber protective covers are securely closed during the flight process.
- Do not disassemble components that were installed at the factory (except for components explicitly allowed in this manual), otherwise, the product will lose its warranty eligibility.

3.3 Propeller

Propellers are wearable parts that require regular maintenance and replacement to ensure the safe flight of the aircraft. The EVO II RTK Series V3 aircraft uses a quick-release propeller design, making it easy for you to replace them.

3.3.1 Replacing Propellers

The propellers are installed in the aircraft by default at the factory, and reinstallation is not required. If the propellers are damaged (e.g., broken or damaged blades), please replace them with new ones before a flight.

- **Keep body parts away from fan blades.**

Tips

- Aircraft propellers are wearable parts. If needed, please purchase them from Autel Robotics.
- The propeller model is marked on the blade. You can check the model of a propeller at the edge of the blade near the propeller center shaft.

- Propellers cannot be installed on the wrong propeller mounts. Please carefully distinguish between propellers and mounts.
- Autel Robotics provides two spares of propellers for each aircraft (with models CW and CCW, respectively). Please refer to the "Packing List" and packaging for details.

■ Detaching the Propellers

1. Press and hold the smart battery power button for 3 seconds to power off the aircraft.
2. First hold the motor on the arm below the propeller to prevent it from rotating, press down on the propeller center shaft firmly, and then turn it in the unlocking direction to detach the propeller.

■ Installing the Propellers

When installing the propellers, strictly follow the following instructions:

1. Make sure that the aircraft is powered off before installing the propellers.
2. The aircraft needs to be installed with two models of propellers, that is, CW and CCW, with two of each model. The CCW propellers have a white circle mark at the center shaft, while the CW propellers do not have this mark at the center shaft.
3. There are two types of propeller mounts on the front and rear arms of the aircraft. The mounts with a white circle mark at the center shaft are for CCW propellers, while the mounts without this mark are for CW propellers.
4. Place a propeller on the corresponding propeller mount. Make sure that the buckle at the center shaft of the propeller aligns with the slot on the mount. Hold the motor on the arm below the propeller to prevent it from rotating, press down on the propeller center shaft firmly, and then turn it in the locking direction marked on the center shaft to secure the propeller in place.

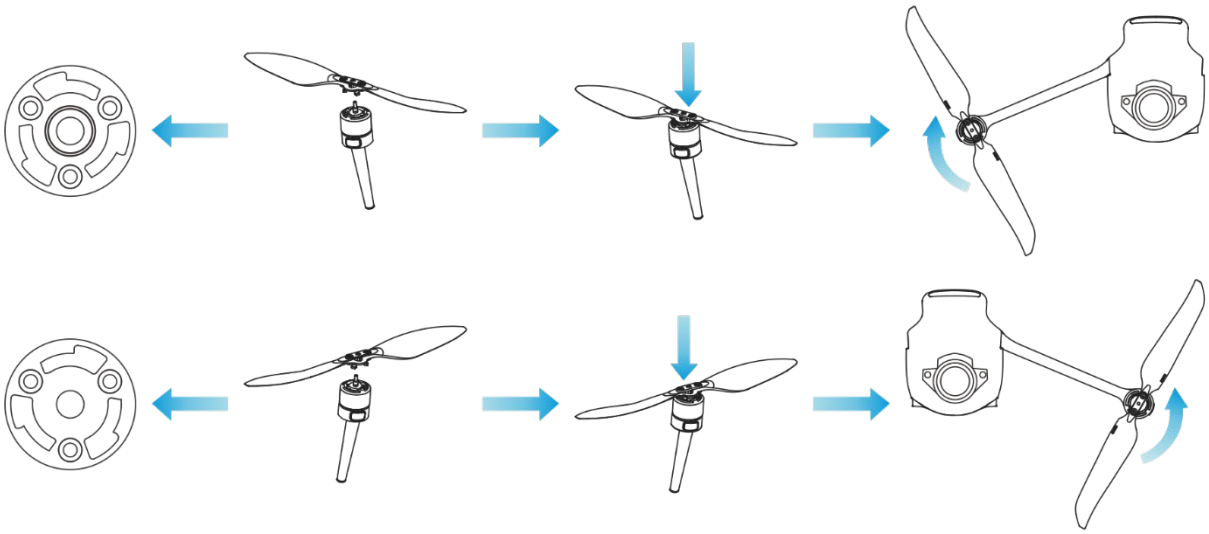

Fig 3-7 Install the Propellers

Table 3-7 Propeller Installation Details

Propeller Model	CCW (White circle on the center shaft)	CW (No white circle on the center shaft)
Installation Area	Mounts with a white circle mark	Mounts without white circle mark

Lock/Unlock	Lock orientation: Turn the propeller this way: to tighten it. Unlock orientation: Turn the propeller this way: to remove it.

⚠ Warning

- The propellers can rotate at a maximum speed of 9000 RPM. Please operate with caution.
- Before each flight, make sure that all propellers are in good condition. If there are aged, damaged, or deformed propellers, please replace them before the flight.
- Before each flight, make sure that all propellers are mounted correctly and securely.
- Please use the propellers provided by Autel Robotics. Do not mix propellers of different models.
- Before replacing propellers, make sure that the aircraft is powered off.
- Propeller edges are sharp. When replacing propellers, it is recommended to wear protective gloves.
- Stay away from rotating propellers or motors to avoid injuries.
- Before testing the aircraft on the ground, make sure that the propellers are removed.

3.3.2 Storing Propellers

After using the aircraft, fold the arms as shown below and store the propellers in the rugged case.

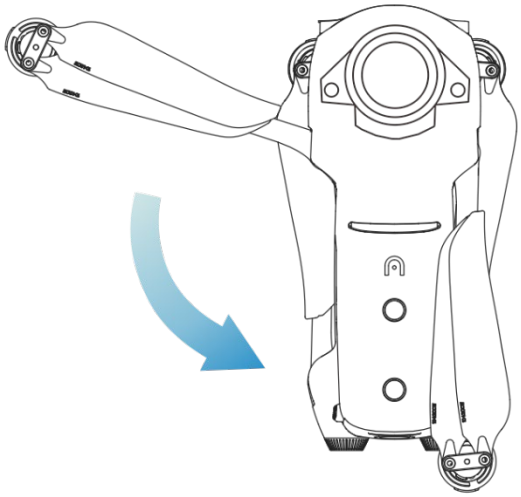

Fig 3-8 Store the Propellers

Important

- Before folding the arms, you should turn off the power of the aircraft. Store the propeller and fold the rear arms first, then fold the front arms.

3.4 Arm Light

After takeoff, the four arms of the aircraft each have an LED indicator at the end. The front arm light will periodically flash to assist users in identifying the front direction of the aircraft. The rear arm lights will display the current status of the aircraft.

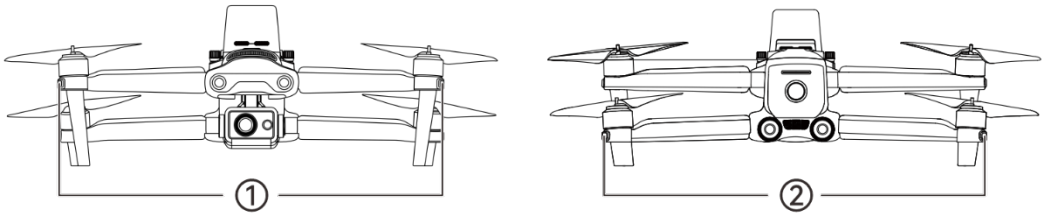

Fig 3-9 Arm Light

Table 3-8 Arm Light Status Details

Mode	Front Arm Light	Rear Arm Light
GNSS Mode ATTI Mode	During normal flight, the green light will flash slowly in cycles of (1s on/1s off) to distinguish the nose direction of the aircraft.	During normal flight, it will alternate flashing according to a cycle of (green light on for 1s /red light on for 1s) to distinguish the tail direction of the aircraft

Table 3-9 Rear Arm Light Status Details

Indicator status (R: red G: green Y: yellow)	Definition
Normal	
R–Ultra-fast Flashing /Fast Flashing →Y- Fast Flashing	System Self-Test
Compass Calibration	
Y–Fast Flashing	Start Calibration
G–Slow Flashing	Current Step Calibration Successful
G–Always On	Calibration Successful
R–Always On	Calibration Failed
Warning	
Y–Fast Flashing	Remote Controller Not Connected to Aircraft
R–Slow Flashing	Low Battery Warning / Illegal Battery
R–Fast Flashing	Critical Low Battery Warning

R–Always On	IMU Abnormal
RY–Alternating Slow Flashing	Magnetometer Abnormal/ Calibration Required

- Slow flashing: flashes once every 2s (0.5s on/1.5s off).
- Fast flashing: flashes twice every 1s.
- Ultra-fast flashing: flashes 5 times per second.

When the aircraft performs power-on self-test and any of the following situations occurs, the following strategies will be implemented to ensure flight safety.

Table 3-10 Power-on self-test flight strategy

Flight strategy	Takeoff Denied	Takeoff Accepted
Abnormal Items	● IMU Abnormal ● Battery Verification Abnormal ● Aircraft ESC Abnormal ● RTK not Fixed in Mission Flight ● Internal Communication Abnormal ● Barometer Abnormal	● Compass Abnormal ● RTK not Fixed but not in Mission Flight ● Aircraft in ATTI Model

3.5 Auxiliary Bottom Light

The aircraft is equipped with auxiliary bottom lights (LED auxiliary lights) at the bottom of the fuselage. The lights are used to assist the downward visual sensing system when the aircraft is landing in weak light environments, so as to ensure better visual positioning performance and enhance the landing safety of the aircraft. You can manually turn the bottom LED auxiliary lights on or off in the Autel Explorer App.

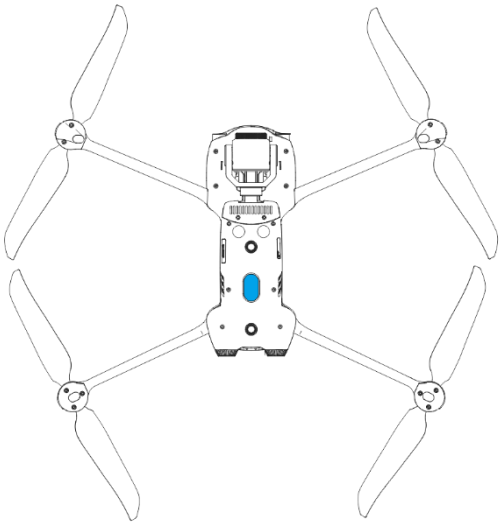

Fig 3-10 Auxiliary Light

Tips

- For how to turn the auxiliary bottom lights on or off, please refer to "6.4 Settings Interface" in Chapter 6.

Warning

- When the auxiliary bottom lights are set to "AUTO", they will turn on automatically at an altitude of 3 meters above the ground when the aircraft is landing and the ambient light is insufficient, and they will turn off automatically after a successful landing.

3.6 Camera

- The EVO II Pro RTK V3 is equipped with a 6K optical gimbal camera, providing high-definition visible light photography capabilities.
- The EVO II Dual 640T RTK V3 is equipped with an infrared thermal imaging dual-camera gimbal system, featuring both an infrared thermal imaging camera and a visible light camera. It provides the capability to capture thermal imaging footage for aerial operations.

3.6.1 Camera Structure

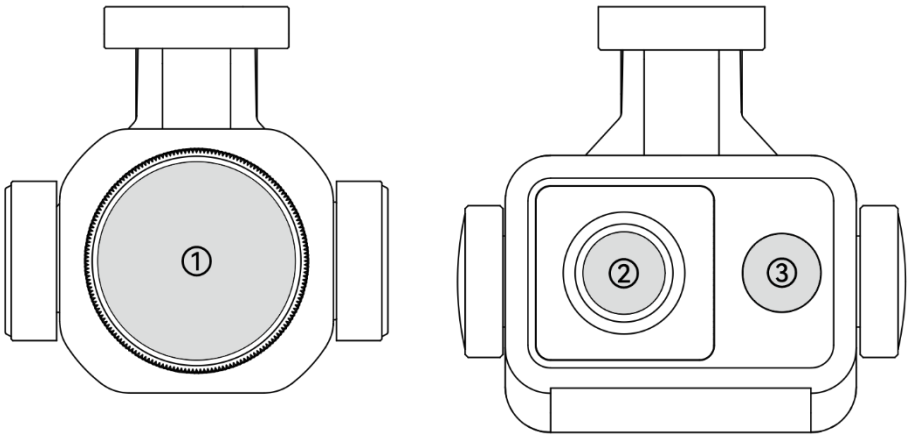

Fig 3-11 The Gimbal Camera of The EVO II RTK Series V3

Table 3-11 EVO II RTK Series V3 Gimbal Camera Details

No.	name	Description
1	Wide Angle Camera	The wide-angle camera of EVO II Pro RTK V3 is used to capture images with a larger field of view within a relatively short shooting distance. 1 inch CMOS sensor, Effective pixel count: 20 million. Field of view: 82 degrees.

2	Infrared Thermal Imaging Camera	The infrared thermal imaging camera of EVO II 640T RTK V3 is used for radiometric measurement and night vision, which can monitor the temperature distribution of the measured target in real time, so as to judge the state of the target. Radiometric temperature range: -20°C~+150°C (high gain mode) and 0°C + 550°C (low gain mode).
3	Wide Angle Camera	The wide-angle camera of EVO II 640T RTK V3 is used to capture images with a larger field of view within a relatively short shooting distance. 1/1.28 inch CMOS sensor, Effective pixel count: 50 million. Field of view: 85 degrees.

⚠ Warning

- Do not point the infrared thermal imaging camera at intensive energy sources such as the sun, lava, laser beams, and molten iron, to avoid damage to the infrared detector.
- The temperature of the observation target should be less than 600 °C. Observing objects with temperatures above this limit may result in damage to the infrared detector.

3.6.2 Camera Operations

■ Remote Controller Control

- Right dial wheel: Used to adjust the zoom factor of the selected camera. Turn left to reduce the zoom factor, and turn right to increase the zoom factor.
- Video recording button: Press the button to start/end video recording.
- Shooting button: Press the button to take photos.

Tips

- For the control operations of the remote controller, please refer to "4.1.1 Remote Controller Components" in Chapter 4.

■ Autel Explorer App Control

For the control operations and the functions related to the camera in the Autel Explorer app, please refer to "6.7 Camera Interface" in Chapter 6.

3.7 Gimbal

The EVO II RTK Series V3 aircraft is equipped with a three-axis stabilized gimbal with a high-precision motor structure, which can ensure stable camera shooting when the aircraft is flying.

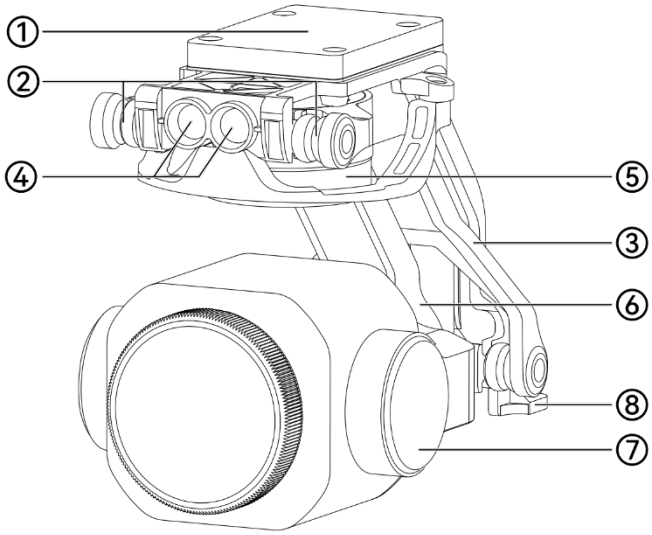

Fig 3-12 Gimbal Structure

Tips

- Please be aware that, except for differences in camera layout, the gimbal structure of EVO II Dual 640T RTK V3 aircraft and EVO II Pro RTK V3 aircraft is similar.

Table 3-12 Gimbal Structure Details

No.	name	Description
1	MCU Installation frame	Control module of the gimbal camera
2	Dampener	Used to buffer the vibration of the gimbal.
3	Dampener Mount	Used to support dampeners and gimbal cameras, etc.
4	Cylindrical Holes	The two cylindrical holes at the front of the gimbal are used to fix one side of the gimbal to the two fixed pins in the aircraft nose gimbal compartment.
5	Roll Axis Motor	Used to control the moving range of the gimbal to roll left or right (mechanical range: -100°~100°; controllable movement range: -90°~90°).
6	Yaw Axis Motor	Used to control the moving range of the gimbal to rotate left or right with its own axis (mechanical range: -45°~45°).
7	Pitch Axis Motor	Used to control the moving range of the gimbal to rotate up or down (mechanical range: -135°~45°, controllable movement range: -90°~30°).
8	Connector	The connector of the gimbal is connected to the connector slot at the bottom of the aircraft fuselage.

3.7.1 Gimbal Mechanical Rotation Range

The mechanical rotation ranges of the pitch, yaw, and roll axes of the gimbal are shown below.

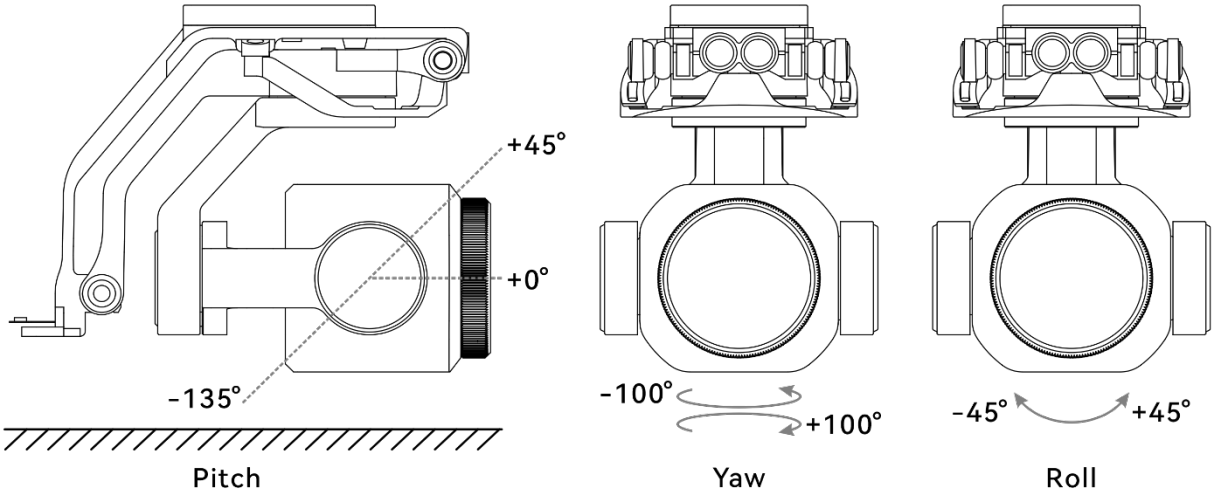

Table 3-13 Mechanical Rotation Range of the Gimbal of the EVO II RTK Series V3 Aircraft

Remarks
● You can control the rotation range of the gimbal, pitch: -90° to 30°, Roll: -90°~90°.

3.7.2 Gimbal Operations

■ Remote Controller Control

- Left dial wheel: Used to adjust the gimbal pitch. Turn left to rotate the gimbal down, and turn right to rotate the gimbal up.
- Custom keys C1/C2: After setting the C1 or C2 key to "Gimbal Pitch Recenter/90°", you can press the key to switch the gimbal angle.

Tips
● For the control operations of the remote controller, please refer to “4.1.1 Remote Controller Components” and “4.11.1 Custom Keys C1 and C2” in Chapter 4.

■ Autel Explorer App control

For the gimbal control operations in the Autel Explorer app, refer to “6.7 Camera Interface” in Chapter 6.

⚠ Warning

- When the aircraft is not in use, especially when the aircraft is being transferred or stored, be sure to use the protective cover of the gimbal to fix the gimbal, so as to avoid damage to the gimbal camera due to accidental rotation or bumping.
- Please remove the protective cover of the gimbal before turning on the gimbal, otherwise, it may cause damage to the gimbal motor and circuit.
- When turning on the power switch of the aircraft, the gimbal will automatically rotate to perform self-check and calibration, please make sure there is no object near the gimbal to hinder its movement.

3.7.3 Replacing the Gimbal

EVO II RTK Series V3 aircraft has a removable gimbal design, allowing you to easily replace the gimbal to meet your flight needs in various scenarios.

Important

- Please follow the instructions below to replace the gimbal, as improper replacement may cause damage to the gimbal or poor contact with the gimbal interface.
- Do not replace the gimbal frequently. The gimbal connector is a precision element, and frequent plugging and unplugging may result in poor contact between the aircraft and the gimbal.
- Please use the gimbal model specified by Autel Robotics for replacement. Incompatible gimbals may cause damage to the aircraft.

⚠ Warning

- Do not attempt to remove or mount the gimbal when it is powered on. Wait for 15 seconds after powering off the aircraft (the internal capacitor is fully discharged) before removing or mounting the gimbal.
- When turning the aircraft upside down to remove or mount the gimbal, please protect the lens at the back of the aircraft fuselage to avoid scratches.
- When disassembling or installing the gimbal, be sure to remove the PSDK function module mounted on the back of the aircraft first.

■ Removing the Gimbal

1. Place the aircraft on a horizontal surface with the bottom of the fuselage facing up.
2. Use the screwdriver with T6 specification to loosen the two anti-loosening screws securing the "Connector Protective Cover." and remove the "Connector Protective Cover."
3. Use the screwdriver with cross 2.0 specification to unscrew the screws securing the FPC connector, and pull the connector ribbon interface out of the slot.
4. Gently pinch the tail of the dampener, slide the gimbal straight back and upward along the gimbal compartment slot.

⚠ Warning

- When removing the gimbal, do not forcefully pull the gimbal out, as this may cause damage to the gimbal or camera. You should hold the gimbal dampener mount to remove the gimbal.

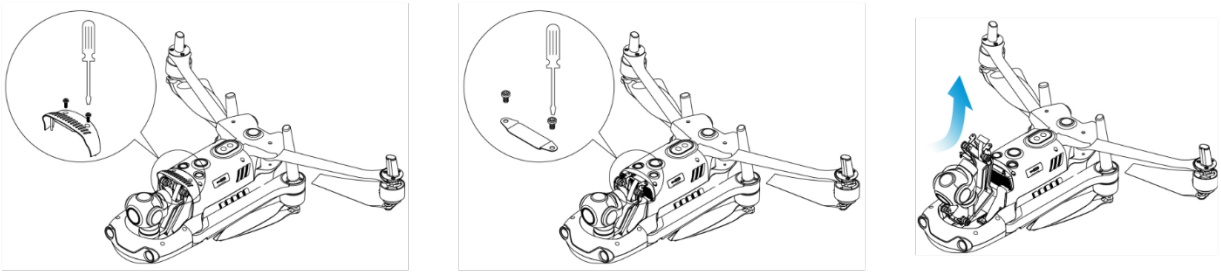

Fig 3-13 Removing the Gimbal

■ Mounting the Gimbal

1. After aligning the cylindrical hole on the front end of the gimbal with the two fixed pins in the aircraft nose gimbal compartment, push and slide the gimbal forward until the connector cover is aligned with the connector slot in the aircraft.
2. Gently push down the connector cover to the bottom, so that the connector under the connector cover is inserted into the connector slot, and the connector cover needs to be flush with the bottom of the aircraft.
3. Use the screwdriver with cross 2.0 specification to partially tighten the two screws into the two fixing holes on the connector cover. After ensuring that the connector is perfectly aligned with the connector slot, fully tighten the two anti-loosening screws to secure the connector cover.
4. Press and hold the battery power button for 3 seconds to power on the aircraft. If the connector cable of the gimbal is connected correctly, the gimbal will automatically rotate the camera to perform a self-test.

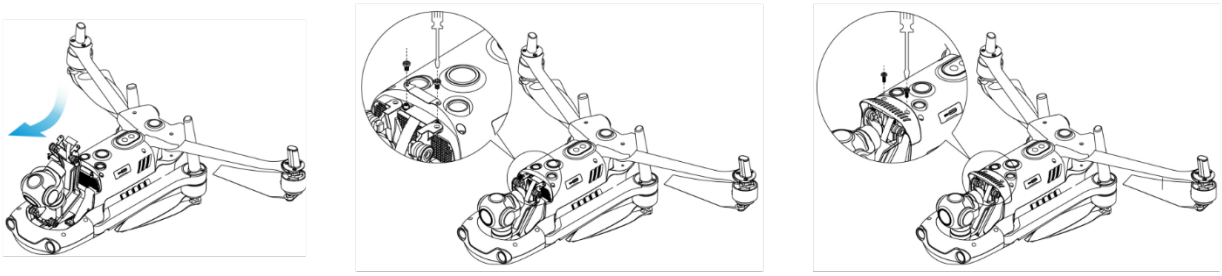

Fig 3-14 Mounting the Gimbal

⚠ Warning

- After installing the gimbal on the aircraft, please ensure that each part is securely fixed to prevent functional failures of the gimbal camera during flight due to loose gimbal assembly, leading to losses.

3.8 Flight Control System

EVO II RTK Series V3 aircraft achieves stable and convenient flight control through its built-in intelligent flight control system. The system supports a number of advanced functions, including auto-return, failsafe, visual positioning system, etc.

Table 3-14 Flight Control System

Module	Description
IMU	A three-axis gyroscope and a three-axis accelerometer measure acceleration and angular velocity.
Compass	Measures the geomagnetic field and provides reference information on the aircraft heading.
GNSS receiver	Receives global satellite navigation signals to measure longitude, latitude, and altitude.
Barometer	Measures atmospheric pressure and is used to determine the altitude of the aircraft.
Visual Sensing System	Provides the aircraft with 720° obstacle awareness around the fuselage.
Ultrasonic sensor	measures the distance between the aircraft and the ground.

3.8.1 Flight Status

Depending on the availability of GNSS signals and flight conditions, the aircraft can automatically switch between three flight modes.

Table 3-15 Flight Status

Mode	Description
GNSS Mode	GNSS mode is activated when the aircraft detects an appropriate GNSS signal. In GNSS mode, if the obstacle avoidance system is turned on, the system will provide auxiliary information to more accurately locate and avoid obstacles, provide stable and smooth flight control, and support auto-return, failsafe, and other safety functions.
Visual Positioning Mode	When the GNSS signal detected is not strong enough to activate GNSS mode, and it meets certain environmental and altitude requirements (ensure that the surrounding environment is well-lit, the ground texture is clear, and the altitude of the aircraft must be within the observation range of the visual sensing system), the visual positioning mode will be activated.
ATTI Mode (Attitude Mode)	When there is no GNSS signal and the environment and altitude cannot meet the requirements of the visual sensing system, that is,

	when there is no GNSS signal and visual positioning failure at the same time, the ATTI mode will be activated. In this mode, the obstacle avoidance system is disabled, and the aircraft only controls the altitude through the barometer.

⚠ Warning

- If you have not fully mastered the flight control of the aircraft and the aircraft is in ATTI mode, please do not take off rashly.

3.8.2 Flight Modes

The aircraft has varying flight performance in different flight modes. You can set the flight mode of the aircraft in the Autel Explorer App. For more information, please refer to "6.3 Status Bar" and "6.4 Settings Interface" in Chapter 6.

Table 3-16 Flight Modes

Flight Modes	Description
Novice mode	Forward, backward, left, and right: 3 m/s; Ascend: 3 m/s; Descend: 3 m/s.
Standard	Forward and backward: 15 m/s; Left and right: 10 m/s; Ascend: 6 m/s; Descend: 6 m/s.
Ludicrous	Forward: 23 m/s; Backward: 18 m/s; Left and right: 20 m/s; Ascend: 8 m/s; Descend: 6 m/s.

⚠ Warning

- If you have not fully mastered the flight control of the aircraft, it is not recommended for you to switch to Ludicrous mode.
- When flying close to the ground, it is recommended to switch to Novice mode for safety.
- Please note that the novice mode is the slow speed mode.
- When switching to Ludicrous mode, the obstacle avoidance function of the aircraft will become unavailable, and the aircraft will not automatically avoid surrounding obstacles during flight. Please pay attention to the surrounding environment when using it, and manually control the aircraft to avoid obstacles.
- When switching to Ludicrous mode, its flight speed is greatly improved compared with Standard mode, so the braking distance in this mode will be correspondingly extended. You should maintain a braking distance of at least 50 meters when operating the aircraft in this mode to ensure personal and flight safety.

3.8.3 Intelligent Flight Function

■ Accurate Landing

The accurate landing function uses the downward binocular visual sensing system of the aircraft to record the information at its take-off point. When the aircraft is returning to the home point or landing, vision algorithms are used to calculate the distance between the aircraft and the take-off point in real time so as to make sure that the aircraft successfully lands at the take-off point.

■ Landing Protection

The landing protection function uses the downward visual sensing system of the aircraft to create a depth image, then calculate the flatness and angle of the depth image to detect whether the surface is flat enough for a safe landing.

■ Intelligent tracking

Intelligent tracking utilizes deep learning algorithms to real-time detect pedestrians. Real-time tracking algorithms are employed to automatically track selected objects while avoiding obstacles during movement. This feature can be used in three tracking modes for objects.

Tips

- The aircraft will record the takeoff point as the default return point. Precision landing will only take effect when the return point is not refreshed during flight.
- When enabling the precision landing function, ensure that the takeoff environment has not changed.
- When intelligent tracking is activated, the maximum flight speed of the aircraft is limited to 10 meters per second.

3.9 Installing the microSD Card

The aircraft comes with a 32 GB microSD card (pre-installed in the microSD card slot of the aircraft at the factory). If you want to replace it with a higher-capacity microSD card, please follow the steps below.

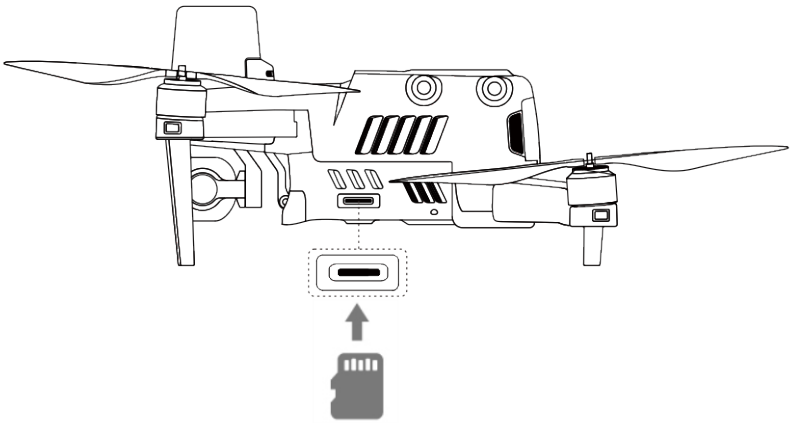

Fig 3-15 install microSD card

Tips

- The aircraft has built-in 8 GB storage space, with approximately 6 GB available due to system firmware and app updates.
- It is recommended that you prioritize using an external microSD card for storing the image data collected during flight to avoid running out of internal storage space, which will affect the flight safety of the aircraft.
- If you plan to shoot high-definition videos, we recommend using a Class 10, UHS-3, or higher microSD card.

Warning

- To prevent data loss, please turn off the aircraft before removing the microSD card.
- After installing the microSD card, close the rubber protective cover over the interface area promptly to avoid affecting the protective performance of the product.

3.10 Connecting to PC/MAC

To transfer photos and videos to a PC, MAC, or other devices, please use a data cable to connect to the device through the USB-C interface of the aircraft.

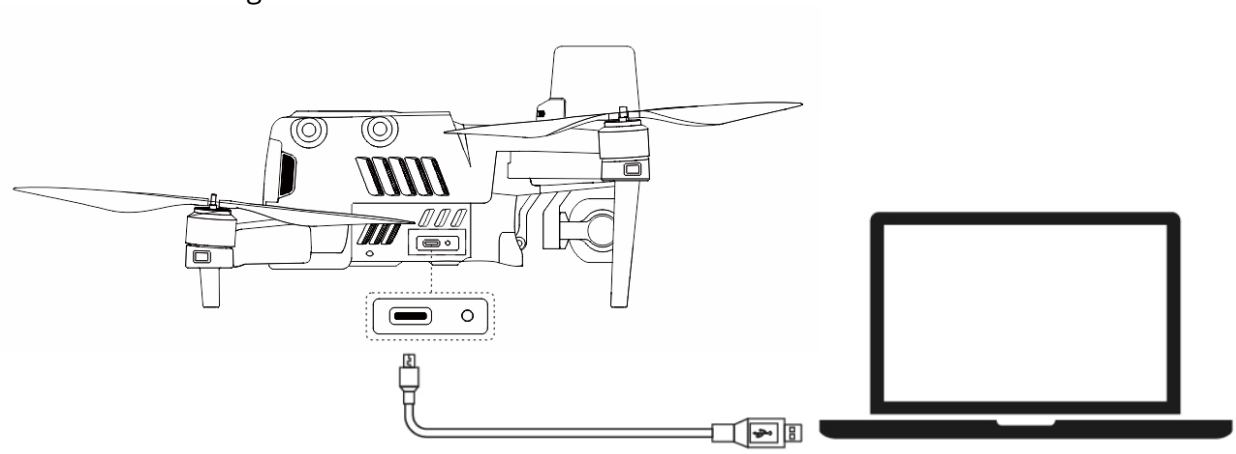

Fig 3-16 Connect the aircraft to PC/MAC

3.11 Extension Interface

The top of the EVO II RTK Series V3 aircraft is equipped with PSDK extension interfaces and mounted with an RTK module to provide centimeter-level positioning. Users can also replace it with other functional mounts, such as loudspeakers, spotlights, and strobes (beacons).

Important

- The RTK module is the standard configuration for the EVO II RTK Series V3 aircraft. Loudspeakers, spotlights, and strobes (beacons) are optional configurations and needs to be purchased separately. If needed, please contact Autel Robotics official or authorized dealers.
- Before flying, please ensure that the mounted equipment is securely connected to the aircraft, and the screws on both sides are tightened.
- During flight, please pay attention to the aircraft's battery level. Mounting consumes the aircraft's battery power to perform its functions, which may reduce the flight duration.
- After removing the mounted equipment from the aircraft, be sure to cover the interface with the protective cover, otherwise, it will affect the protective performance of the aircraft.

Table 3-17 Compatible Mounting List

Mount Info	Loudspeakers (Optional)
Part Number (EAN)	6924991102304
Part Number (UPC)	889520012041
Manufacturer	Autel Robotics
Maximum Mount Dimension	40×80×77mm
Maximum Mount Weight	98.5g
Software Version Requirement	Aircraft firmware version: V1.1.55 Remote controller version: V1.3.9.8 Autel Explorer version: 3.1.63
Mount Info	**Spotlights (Optional)**
Part Number (EAN)	6924991102328
Part Number (UPC)	889520012065
Manufacturer	Autel Robotics
Maximum Mount Dimension	48.5×72×63mm
Maximum Mount Weight	77g
Software Version Requirement	Aircraft firmware version: V1.1.55 Remote controller version: V1.3.9.8 Autel Explorer version: 3.1.63
Mount Info	**Strobes (beacons, Optional)**
Part Number (EAN)	6924991102311

Part Number (UPC)	889520012058
Manufacturer	Autel Robotics
Maximum Mount Dimension	38×72×34mm
Maximum Mount Weight	19.5g
Software Version Requirement	Aircraft firmware version: V1.1.55 Remote controller version: V1.3.9.8 Autel Explorer version: 3.1.63

Mount Info	RTK Module
Part Number (EAN)	6924991102335
Part Number (UPC)	889520012072
Manufacturer	Autel Robotics
Maximum Mount Dimension	55.5×72.5×57mm
Maximum Mount Weight	59.5g
Software Version Requirement	Aircraft firmware version: V1.1.55 Remote controller version: V1.3.9.8 Autel Explorer version: 3.1.63

Tips

- When using the above-mounted in conjunction with the aircraft, be sure to ensure that the aircraft, remote control, and Autel Explorer App meet the functional compatibility requirements. Versions below the requirements will not enable related functions.
- According to legal requirements, when flying at night, be sure to install and turn on the night navigation lights.

3.12 The Noise Description

When the EVO II RTK Series V3 aircraft hovers, it generates noise with an intensity of 69dB (at a distance of 0.5 meters from the aircraft). Users should familiarize themselves with local noise pollution prevention and control regulations, and set a reasonable flight altitude or safety distance to ensure no interference with other individuals, groups, or organizations.

■ A-weighted sound power level

The EVO II RTK Series V3 aircraft has undergone sound power testing by relevant qualified third-party testing agencies, and the results comply with the regulations of the European Union regarding unmanned aerial vehicles.

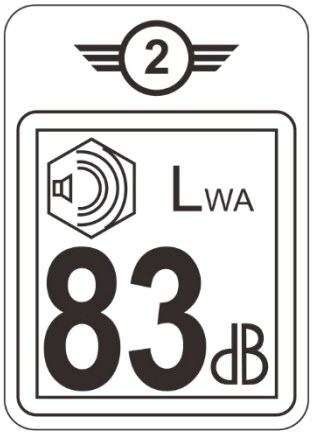

Fig 3-17 A-weighted sound power level of EVO II RTK Series V3 aircraft

■ A-weighted sound pressure level

Measurement results for the EVO II RTK Series V3 aircraft, in accordance with the requirements of GB 42590-2023 in Chinese mainland, are provided below:

Table 3-18 Noise Measurements Results (normalized to 1 m from the aircraft)

Observation Points	Hover	Fly (1 m/s)
Ground Measure Point (Below)	75.1dB	75.2dB
Side Measure Point (Horizontal Plane)	69.4dB	68.2dB
Note: The measurement environment is an outdoor cement ground.		

Tips

- Before conducting a flight, please make sure to verify the noise restrictions in the flight area in advance to avoid violations of local regulations regarding aircraft noise.

3.13 Autel SkyLink Image Transmission Function

The EVO II RTK Series V3 aircraft is equipped with Autel SkyLink 2.0 transmission technology, featuring two transmission antennas, where one transmits signals, and the other receives signals. This allows for a communication range of up to 15 kilometers between the aircraft and ground equipment.

- The system supports adaptive frequency hopping transmission across multiple frequency bands, selecting the optimal channel based on electromagnetic interference conditions, providing robust anti-interference capabilities.
- Real-time transmission quality reaches 1080p@30FPS, with a high transmission bitrate of 32Mbps and low-latency transmission characteristics.

Remarks

- The transmission data is based on the remote controller and comes from test data, and the test environment and conditions are different, and the data may be different.
- The transmission range is provided for reference only, and during actual use, it is important to monitor the quality of the video transmission signal continuously. In the case of poor video transmission signals, it is recommended to promptly reduce the flight radius. For more information, please refer to "6.3 Status Bar" in Chapter 6.

■ The frequency band description for the aircraft transmission system

The transmission frequency bands of the EVO II RTK Series V3 aircraft comply with regulatory requirements worldwide. Please feel assured in using it. The relevant certified frequency bands are listed in the table below.

During actual use, after powering on and pairing the aircraft with the remote controller, the Autel Explorer App on the remote controller will automatically determine the location of different countries and regions based on the GNSS information received by the aircraft. It will then automatically select the frequency band that complies with local regulations for wireless communication."

Tips

- After pairing the aircraft with the remote controller, the wireless communication frequency band between them will be automatically controlled by the Autel Explorer App based on the geographical information of the aircraft to ensure compliance with local regulations.
- Before flying, ensure that the aircraft, after powering on, can receive a good GNSS signal so that the Autel Explorer App can select the correct communication frequency band.
- In scenarios where the aircraft flies in visual positioning mode (such as in the absence of GNSS signals), the wireless communication frequency band between the aircraft and the remote controller will default to the one used in the previous flight. In such cases, it is recommended that users power on and position the aircraft in an area with a good GNSS signal before proceeding to the actual operational area for the flight.

Table 3-19 Global Certified Frequency Bands for EVO II RTK Series V3 Aircraft (Image Transmission)

Frequency Band Classification	Detailed Frequency Bands	Supported Countries and Regions
2.4G	BW=1.4M：2403.5 - 2475.5MHz BW=10M：2407.5 - 2471.5MHz BW=20M：2412.5 - 2462.5MHz	■ Chinese Mainland ■ Taiwan, China ■ United States ■ Canada ■ EU ■ United Kingdom ■ Australia ■ South Korea ■ Japan

5.8G	BW=1.4M：5728 - 5847MHz BW=10M：5733 - 5842MHz BW=20M：5738 - 5839MHz	■ Chinese Mainland ■ Taiwan, China ■ United States ■ Canada ■ EU ■ United Kingdom ■ Australia ■ South Korea
5.7G	BW=1.4M：5652.5 - 5752.5MHz BW=10M：5655 - 5750MHz BW=20M：5660 - 5745MHz	■ Japan
900M	BW=1.4M：904 - 926MHz BW=10M：909 - 921MHz BW=20M：914 - 916MHz	■ United States ■ Canada

Remarks

- Some countries and regions have strict restrictions on the use of radio communication frequency bands. It is crucial to use them legally, and any modification of communication components is strictly prohibited.
- For flights in countries not listed in the above table, it is essential to consult the local communication regulatory authorities to ensure that the wireless communication frequency bands of the aircraft comply with local regulatory requirements.

■ Remote Control Devices

The aircraft supports frequency pairing with the remote controller, enabling remote communication control of the aircraft.

Table 3-20 Supported list of aircraft ground control equipment

Control Device Information	Autel Smart Controller V3
Part Number (EAN)	6924991126263
Part Number (UPC)	889520206266
Manufacturer	Autel Robotics
Control Software	Autel Explorer App
Software Version Requirement	V1.0.0.0 or higher
Supplementary Information	Standard configuration

Tips

- The Autel Smart Controller V3 is included as a standard item in the aircraft package, and Autel Robotics also provides retail packaging for customers to choose independently.
- The Autel Smart Controller V3 is available in multiple retail versions. Only the remote controller that has the Autel Explorer App installed supports the control of the EVO II RTK Series V3 aircraft. Please consult Autel Robotics when making a purchase.
- Ensure that the control software version meets the above requirements when remotely controlling the aircraft with the mentioned devices."

Chapter 4 Remote Controller

4.1 Introduction

The Autel Smart Controller V3 is installed with the Autel Explorer App by default, allowing you to operate and set the aircraft and the gimbal camera and transmit high-definition videos from the gimbal camera in real time. It offers a maximum communication distance of 15 kilometers.

Remarks

- The maximum communication distance of the Autel Smart Controller V3 is measured under unblocked and interference-free conditions and is for references only.
- It supports adaptive frequency hopping transmission, selects the optimal channel according to the electromagnetic interference situation, and has strong anti-interference ability.
- The whole link data storage between the aircraft and the remote controller adopts the AES-128 encryption method to ensure end-to-end data communication security.

4.1.1 Remote Controller Components

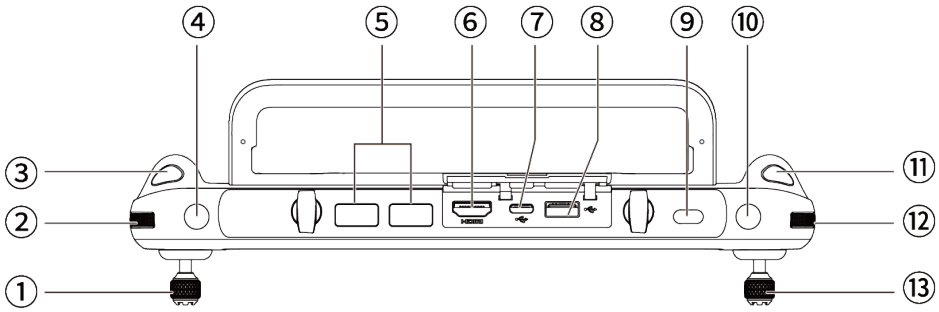

Fig 4-1 Remote Controller Top-Down View

Table 4-1 Remote Controller Top-Down View Details

No.	Name	Description
1	Left Command Stick	Controls the state of motion of the aircraft. The default stick mode is Mode 2. In this mode, you can use the stick to control the ascent, descent, and heading of the aircraft. You can set the stick mode in the Autel Explorer App. For more information, please refer to "6.4 Settings Interface" in Chapter 6.
2	Left Dial Wheel	Turn the dial wheel to adjust the gimbal pitch.

3	Video Recording Button	Tap to start/end recording videos.
4	Key C1	Use the Autel Explorer App to customize the key function. For more information, please refer to "6.4 Settings Interface" in Chapter 6.
5	Air Outlet	For heat dissipation of the remote controller. When using it, please pay attention to whether there are foreign objects blocking the air outlet.
6	HDMI Interface	Outputs the live view of the remote controller to a supported display device.
7	USB -C Interface	Used for remote controller charging or device debugging.
8	USB-A Interface	Connects to an expandable 4G/5G module or external USB device for data transmission.
9	Power button	Long press for 3s to turn on/off the remote controller. When the remote controller is on, quickly press the power button to switch between Screen On and Screen Off.
10	Key C2	Use the Autel Explorer App to customize the key function. For more information, please refer to "6.4 Settings Interface" in Chapter 6.
11	Shooting Button	Tap to take a photo.
12	Right Dial Wheel	Turn the dial wheel to adjust the zoom factor of the camera.
13	Right Stick	Controls the state of motion of the aircraft. The default stick mode is Mode 2. In this mode, you can use the stick to control the translation of the aircraft in four directions: front/back/left/right. You can set the stick mode in the Autel Explorer App. For more information, please refer to "6.4 Settings Interface" in Chapter 6.

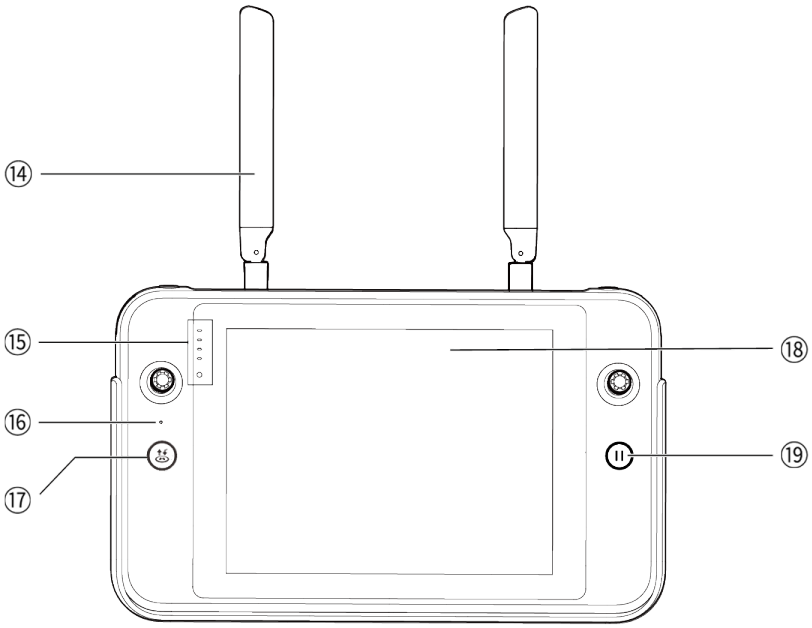

Fig 4-2 Remote Controller Front View

Table 4-2 Remote Controller Front View Details

No.	Name	Description
14	Antenna	Transmits the control signals of the remote controller and receives the image transmission information of the aircraft.
15	Battery Level Indicator	Displays the remaining battery level of the remote controller.
16	Audio Input	Receives information from an external audio source near the remote controller.
17	Take-off/Return-to-Home Button	When the aircraft is turned on but not taking off, press and hold the button for 2 seconds, and the aircraft will take off and hover at an altitude of 1.2 meters above the ground. When the aircraft is flying, press and hold the button for 2 seconds, and the aircraft will automatically begin the return-to-home process.
18	Display	Displays real-time image transmission views. with 2048×1536 resolution. Touch operation is supported.
19	Pause Button	When the aircraft is in autonomous flight mode, short press this button to control the aircraft to suspend autonomous flight and hover in place or resume autonomous flight; press and hold this button for 2 seconds to exit the autonomous flight.

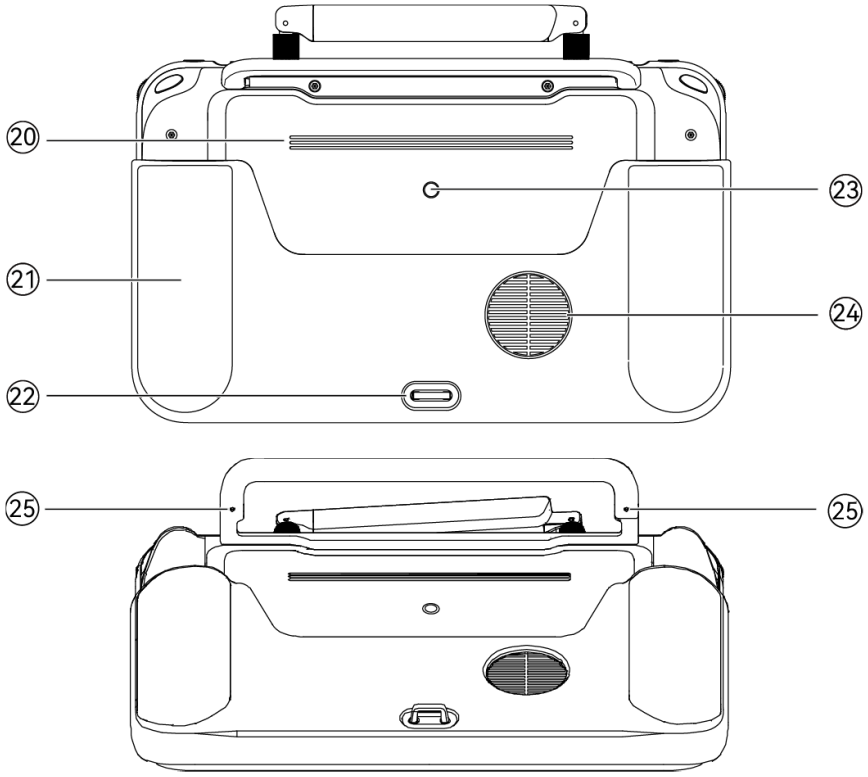

Fig 4-3 Remote Controller Rear View

Table 4-3 Remote Controller Rear View Details

No.	Name	Description
20	Speaker	Plays sound to indicate the status of the aircraft.
21	Protective Cover	Optional accessory. Used to prevent external damage such as collision and abrasion of the remote controller.
22	Lower Hook	Used to connect and fix the remote controller strap.
23	Standard 1/4 interface	Used for attaching tripods.
24	Air Inlet	Used for heat dissipation of the remote controller. Please pay attention to whether there are foreign objects blocking the air inlet when using it.
25	Command Stick Storage Slot	Used to store left and right sticks.

4.1.2 Communication Frequency Bands

The image transmission frequency bands of Autel Smart Controller V3 comply with regulatory requirements worldwide. Please refer to the table below for the relevant certified frequency bands.

Tips

- After the aircraft is paired with the remote controller, the frequency bands between them will be automatically controlled by the Autel Explorer App based on the geographical information of the aircraft. This is to ensure compliance with local regulations regarding frequency bands.
- Before flight, please ensure that the aircraft receives a strong GNSS signal after powering on. This allows the Autel Explorer App to receive the proper communication frequency band.
- When users adopt visual positioning mode (such as in scenarios without GNSS signals), the wireless communication frequency band between the aircraft and remote controller will default to the band used in the previous flight. In this case, it is advisable to power on the aircraft in an area with a strong GNSS signal, then start flight in the actual operational area.

Table 4-4 Global Certified Frequency Bands (Image Transmission)

Operating Frequency	Details	Certified Countries & Regions
2.4G	BW=1.4M: 2403.5 - 2475.5 MHz BW=10M: 2407.5 - 2471.5 MHz BW=20M: 2412.5 - 2462.5 MHz	■ Chinese Mainland ■ Taiwan, China ■ United States ■ Canada ■ EU ■ United Kingdom ■ Australia ■ South Korea ■ Japan
5.8G	BW=1.4M: 5728 - 5847 MHz BW=10M: 5733 - 5842 MHz BW=20M: 5738 - 5839 MHz	■ Chinese Mainland ■ Taiwan, China ■ United States ■ Canada ■ EU ■ United Kingdom ■ Australia ■ South Korea
5.7G	BW=1.4M: 5652.5 - 5752.5 MHz BW=10M: 5655 - 5750 MHz BW=20M: 5660 - 5745 MHz	■ Japan
900M	BW=1.4M: 904 - 926 MHz BW=10M: 909 - 921 MHz BW=20M: 914 - 916 MHz	■ United States ■ Canada

Table 4-5 Global Certified Frequency Bands (Wi-Fi)

Operating Frequency	Details	Certified Countries & Regions
2.4G （2400 – 2483.5 MHz）	802.11b/g/n	■ Chinese Mainland ■ Taiwan, China ■ United States ■ Canada ■ EU ■ United Kingdom ■ Australia ■ South Korea ■ Japan
5.8G （5725 – 5850 MHz）	802.11a/n/ac	■ Chinese Mainland ■ Taiwan, China ■ United States ■ Canada ■ EU ■ United Kingdom ■ Australia ■ South Korea
5.2G （5150 – 5250 MHz）	802.11a/n/ac	■ Japan

4.2 Installing the Remote Controller Lanyard

Tips

- The remote controller lanyard is an optional accessory. You can choose whether to install it as required.
- When holding the remote controller for a long time during flight operations, we recommend that you install the remote controller lanyard to effectively reduce the pressure on your hands.

■ Steps

1. Clip the two metal clips on the lanyard to the narrow positions on both sides of the metal handle at the back of the controller.
2. Open the metal button of the lanyard, bypass the lower hook at the bottom of the back of the controller, and then fasten the metal button.
3. Wear the lanyard around your neck, as shown in the figure below, and adjust it to a suitable length.

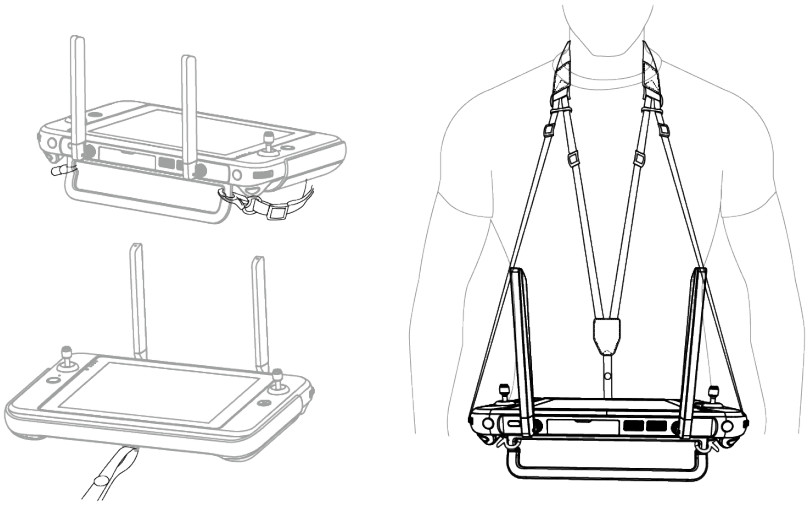

Fig 4-4 Install the Remote Controller Lanyard (As Required)

4.3 Installing/Storing Command Sticks

The Autel Smart Controller V3 features removable command sticks, which effectively reduce storage space and enable easy carrying and transportation.

■ Installing command sticks

There is a command stick storage slot above the mental handle at the back of the controller. Rotate counterclockwise to remove the two command sticks and then rotate them clockwise to install them separately on the remote controller.

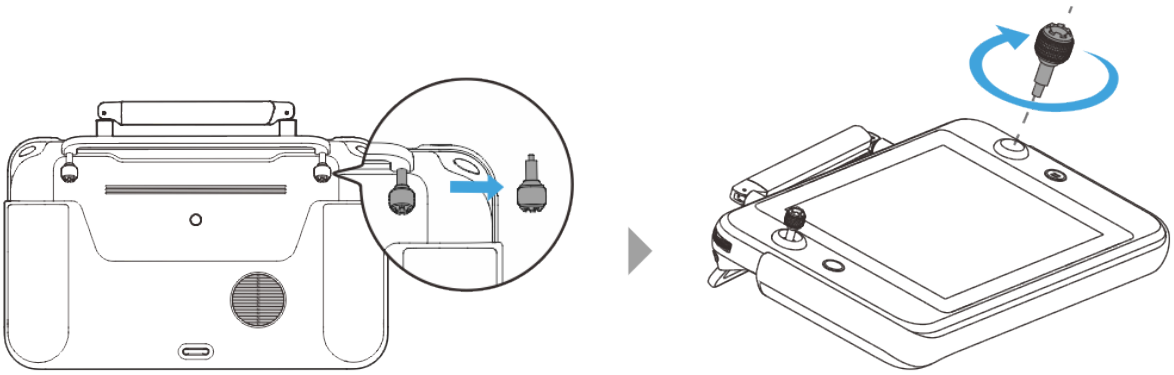

Fig 4-5 Installing command sticks

■ Storing Command sticks

Simply follow the reverse steps of the above operation.

Tips
● When the command sticks are not in use (such as during transportation and temporary aircraft standby), we recommend that you remove and store them on the metal handle.

This can prevent you from accidentally touching the command sticks, causing damage to the sticks or unintended startup of the aircraft.

4.4 Turning the Remote Controller On/Off

■ Turning the Remote Controller On

Press and hold the power button at the top of the remote controller for 3 seconds until the controller emits a "beep" sound to turn it on.

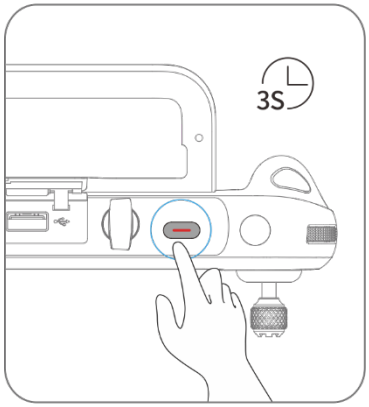

Fig 4-6 Turning the Remote Controller On

Tips

- When using a brand-new remote controller for the first time, please follow the on-screen instructions to complete the relevant setup.

■ Turning the Remote Controller Off

When the remote controller is on, press and hold the power button at the top of the remote controller until the "Off" or "Restart" icon appears at the top of the controller's screen. Tapping the "Off" icon will turn off the remote controller. Tapping the "Restart" icon will restart the remote controller.

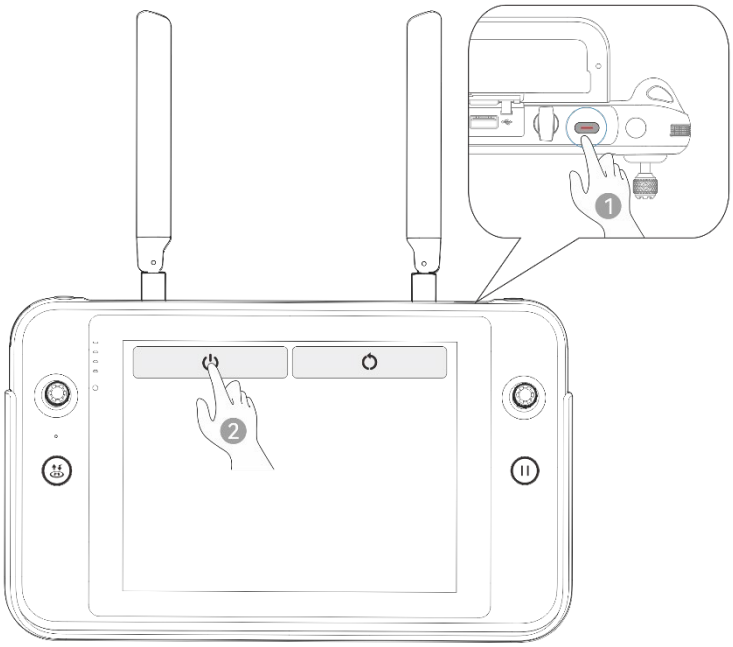

Fig 4-7 Turning the Remote Controller Off

Tips
● When the remote controller is on, you can press and hold the power button at the top of the remote controller for 4 seconds to forcibly turn it off.

4.5 Checking the Battery Level of the Remote Controller

When the remote controller is off, short press the power button of the remote controller for 1 second, and the battery level indicator will display the battery level of the remote controller.

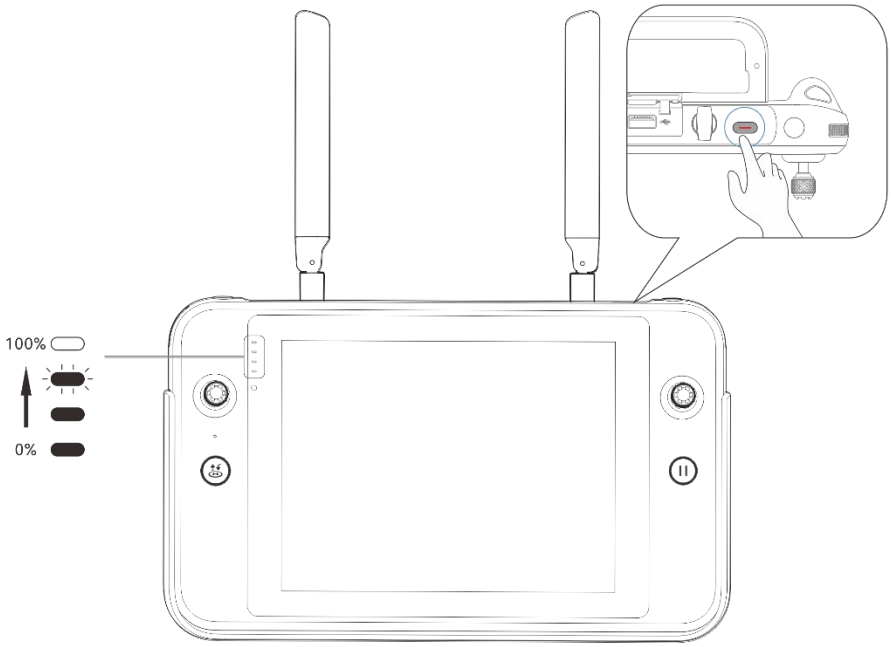

Fig 4-8 Checking the Battery Level of the Remote Controller

Table 4-6 Battery Remaining

Power Display	Definition	Power Display	Definition
	1 light always on: 0%-25% power		2 lights always on: 25%-50% power
	3 lights always on: 50%-75% power		4 lights always on: 75%-100% power

Tips

When the remote controller is on, you can check the current battery level of the remote controller in the following ways:

- Check it on the top status bar of the Autel Explorer App.
- Check it on the system status bar of the remote controller. In this case, you need to enable “Battery Percentage” in the “Battery” of the system settings in advance.
- Go to the system settings of the remote controller and check the current battery level of the controller in “Battery”.

4.6 Charging the Remote Controller

Connect the output end of the official RC charger to the USB-C interface of the remote controller by using a USB-C to USB-C cable and connect the plug of the charger to an AC power supply (100-240 V~ 50/60 Hz).

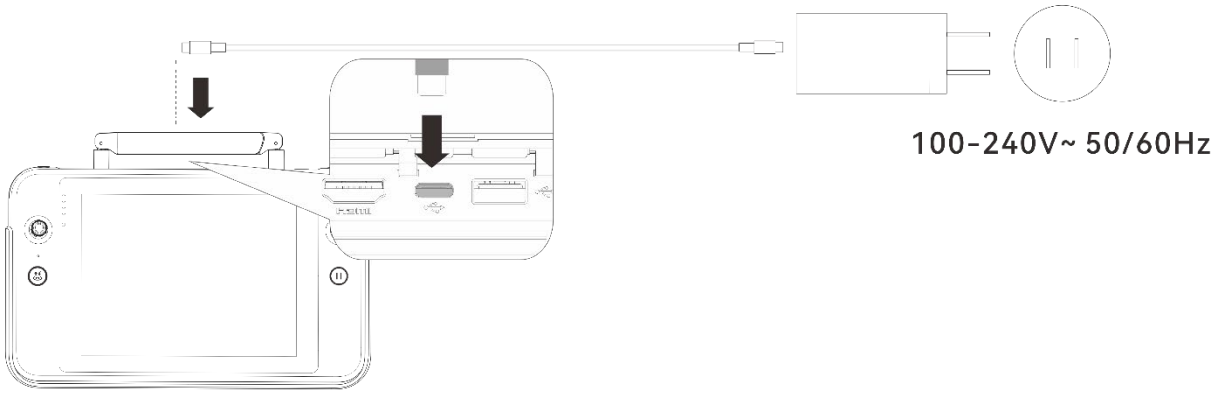

Fig 4-9 Use the RC charger to charge the remote controller

Warning

- Please use the official charger provided by Autel Robotics to charge the remote controller. Using third-party chargers may damage the battery of the remote controller.

- After charging is complete, please disconnect the remote controller from the charging device promptly.

Remarks

- It is recommended to fully charge the remote controller battery before the aircraft takes off.
- Generally, it takes about 120 minutes to fully charge the aircraft battery, but the charging time is related to the remaining battery level.

4.7 Adjusting the Antenna Position of the Remote Controller

During flight, please extend the antenna of the remote controller and adjust it to an appropriate position. The strength of the signal received by the antenna varies depending on its position. When the angle between the antenna and the back of the remote controller is 180° or 270°, and the plane of the antenna faces the aircraft, the signal quality between the remote controller and the aircraft can reach its best state.

Important

- When you operate the aircraft, make sure that the aircraft is in the place for the best communications.
- Do not use other communication devices of the same frequency band at the same time to prevent interference with the signals of the remote controller.
- During flight, if there is a poor image transmission signal between the aircraft and the remote controller, the remote controller will provide a prompt. Please adjust the antenna orientation according to the prompt to ensure that the aircraft is in the optimal data transmission range.
- Please make sure that the antenna of the remote controller is securely fastened. If the antenna becomes loose, please rotate the antenna clockwise until it is firmly fastened.

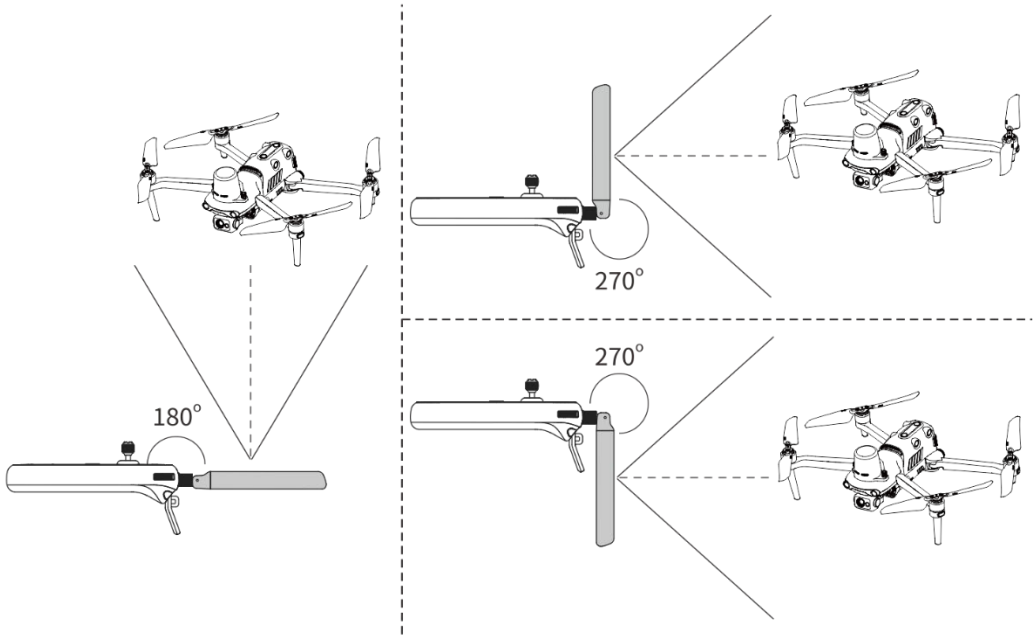

Fig 4-10 Extend the antenna

4.8 Remote Controller System Interfaces

4.8.1 Remote Controller Main Interface

After the remote controller is turned on, it enters the main interface of the Autel Explorer App by default.

In the main interface of the Autel Explorer App, slide down from the top of the touch screen or slide up from the bottom of the touch screen to display the system status notification bar and navigation keys, and tap the "Home" button or the "Back" button to enter the "Remote Controller Main Interface". Swipe left and right on the "Remote Controller Main Interface" to switch between different screens, and enter other applications as needed.

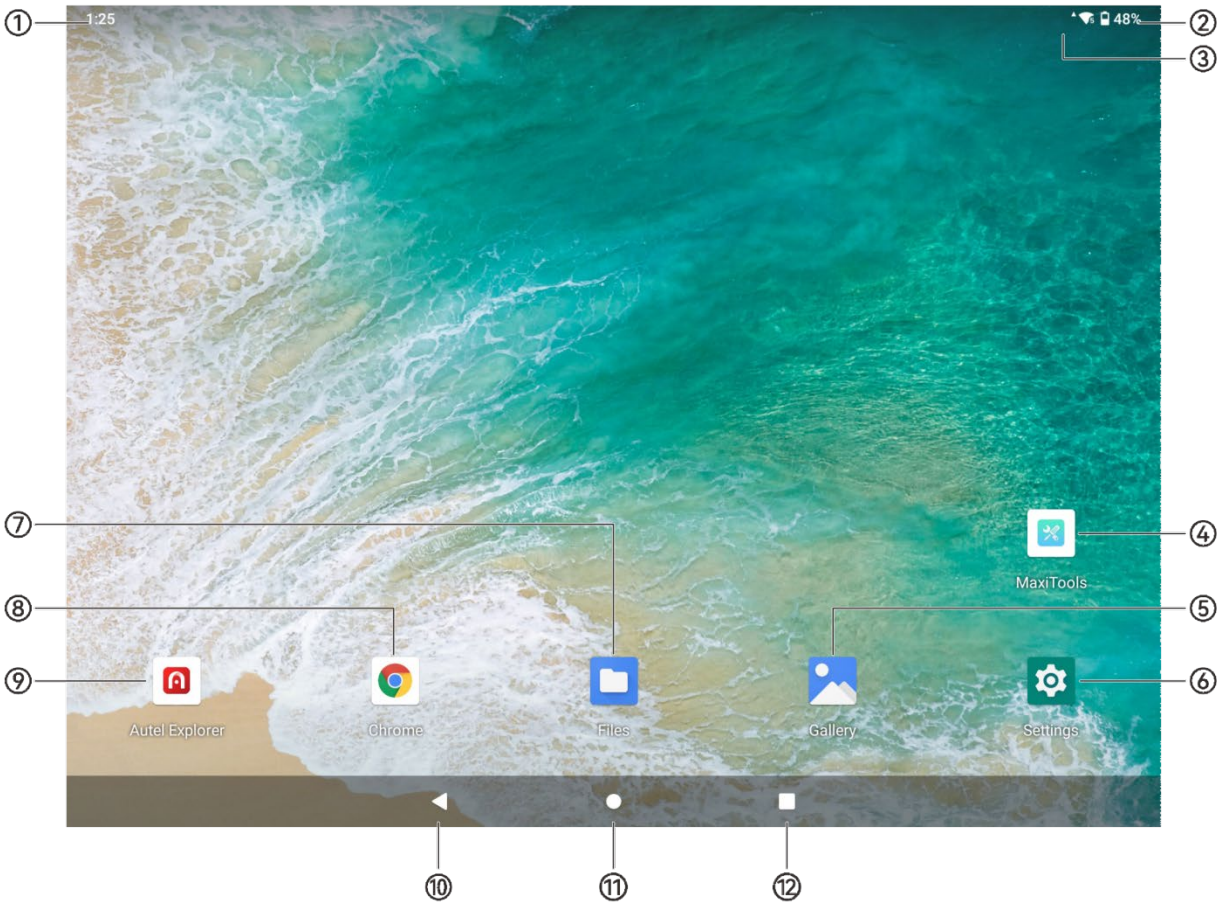

Fig 4-11 Remote Controller Main Interface

Table 4-7 Remote Controller Main Interface Details

No.	Name	Description
1	Time	Indicates the current system time.
2	Battery Status	Indicates the current battery status of the remote controller.
3	Wi-Fi Status	Indicates that Wi-Fi is currently connected. If not connected, the icon is not displayed. You can quickly turn on or off the connection to Wi-Fi by sliding down from anywhere on the "Remote Controller Interface" to enter the "Shortcut Menu".
4	MaxiTools	The app is installed in the system by default. It supports the log function and can restore factory settings.
5	Gallery	The app is installed in the system by default. Tap it to view the images saved by the current system.
6	Settings	The system settings app of the remote controller. Tap it to enter the settings function, and you can set the network, Bluetooth, applications and notifications, battery, display,

		sound, storage, location information, security, language, gestures, date and time, device name, etc.
7	Files	The app is installed in the system by default. Tap it to manage the files saved in the current system.
8	Chrome	Google Chrome. The app is installed in the system by default. When the remote controller is connected to the Internet, you can use it to browse web pages and access Internet resources.
9	Autel Explorer	Flight software. The Autel Explorer App starts by default when the remote controller is turned on. For more information, please refer to “Chapter 6 Autel Explorer App”.
10	“Back” Button	Tap the button to return to the previous page.
11	“Home” Button	Tap the button to jump to the "Remote Controller Main Interface".
12	“Recent apps” Button	Tap the button to view all background programs currently running and take screenshots. Press and hold the application to be closed and slide up to close the application. Select the interface where you want to take a screenshot, and tap the "Screenshot" button to print, transfer via Bluetooth, or edit the screenshot.

Tips

- The remote controller supports the installation of third-party Android apps, but you need to obtain the installation packages on your own.
- The remote controller has a screen aspect ratio of 4 : 3, and some third-party app interfaces may encounter compatibility issues.

Table 4-8 List of Pre-installed Apps on the Remote Controller

No.	Pre-installed App	Device Compatibility	Software Version	Operating System Version
1	Files	√	11	Android 11
2	Gallery	√	1.1.40030	Android 11
3	Autel Explorer	√	V3.1.63	Android 11
4	Wireless emergency alerts	√	R-initial	Android 11
5	Chrome	√	68.0.3440.70	Android 11

6	Settings	√	11	Android 11
7	MaxiTools	√	2.45	Android 11
8	Google Pinyin Input	√	4.5.2.193126728-arm64-v8a	Android 11
9	Android Keyboard (AOSP)	√	11	Android 11
10	com.android.provision	√	11	Android 11
11	Quickstep	√	11	Android 11

Tips

- Please be aware that the factory version of the Autel Explorer App may vary depending on subsequent function upgrades.

4.8.2 Shortcut Menu

Slide down from anywhere on the "Remote Controller Interface", or slide down from the top of the screen in any app to display the system status notification bar, and then slide down again to bring up the “Shortcut Menu”.
In the "Shortcut Menu", you can quickly set Wi-Fi, Bluetooth, screen cast, screen recorder, airplane mode, screen brightness, and USB setting.

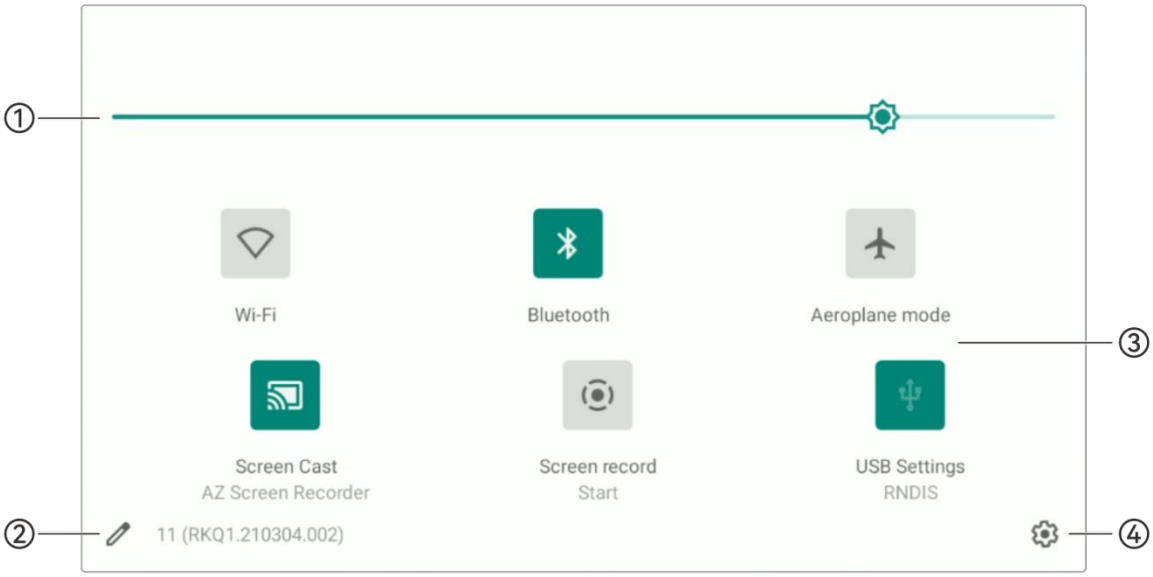

Fig 4-12 Shortcut Menu

Table 4-9 Shortcut Menu Details

No.	Name	Description
1	Screen Brightness Adjustment	Drag the slider to adjust the screen brightness.
2	Shortcut Edit	Tap to arrange the layout of the Menu
3	Wi-Fi	Tap the icon to enable or disable the Wi-Fi function. Long press it to enter WLAN settings and select the wireless network to be connected.
	Bluetooth	Tap the icon to enable or disable the Bluetooth function. Long press it to enter the Bluetooth settings and select the Bluetooth to be connected.
	Airplane Mode	Tap the icon to turn on or off the airplane mode, that is, to turn on or turn off the Wi-Fi and Bluetooth functions at the same time.
	Screen Cast	Tap the icon to project the real-time image of the remote controller to other display devices which are using the same network.
	Screen Record	After tapping on the icon, a dialog box will pop up, where you can choose whether to enable the functions of recording audio and displaying the touch screen position, and then tap the "Start" button, wait for 3 seconds, and start screen recording. Tap the icon again or tap “Screen Recorder” to turn off screen recording.
	USB Settings	Tap to enter USB setting interface to set the function of the USB.
4	Setting	Tap to enter the system setting.

4.9 Frequency Pairing With the Remote Controller

4.9.1 Using the Autel Explorer App

Only after the remote controller and the aircraft are paired can you operate the aircraft using the remote controller.

Table 4-10 Frequency Pairing Process in the Autel Explorer App

Step	Operation	Diagram
1	Turn on the remote controller and the aircraft. After entering the main interface of the Autel Explorer App, tap "⚙" in the upper-right corner, select "Remote Control", and then tap "Remote Control Matching".	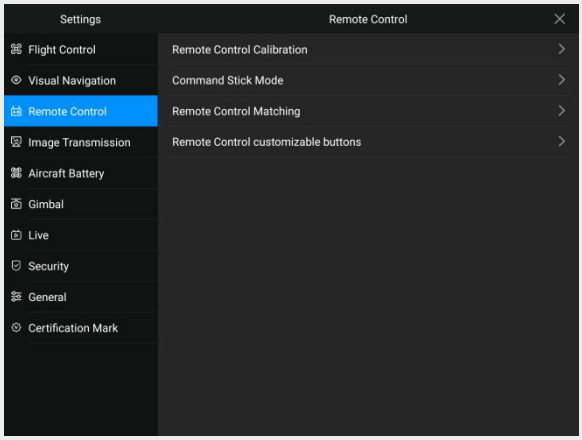
2	Follow the tips on the screen, long press the pair button on the aircraft for 3 seconds, and tap the "Start Pairing" in remote controller interface to complete the frequency pairing process with the remote controller.	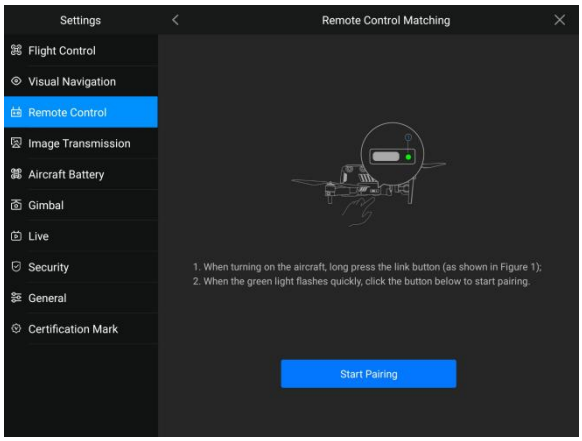

Remarks

- The aircraft included in the aircraft kit is paired with the remote controller provided in the kit at the factory. No pairing is required after the aircraft is powered on. Normally, after completing the aircraft activation process, you can directly use the remote controller to operate the aircraft.
- If the aircraft and the remote controller become unpaired due to other reasons, please follow the above steps to pair the aircraft with the remote controller again.

Important

- When pairing, please keep the remote controller and the aircraft close together, at most 50 cm apart.

4.9.2 Using Combination Buttons (For Forced Frequency Pairing)

If the remote controller is turned off, you can perform forced frequency pairing. The process is as follows:

1. Press and hold the power button and the take-off/return-to-home button of the remote controller at the same time until the battery level indicator of the remote controller flashes quickly, which indicates that the remote controller has entered the forced frequency pairing state.
2. Make sure that the aircraft is turned on. Long press the pair button on the aircraft for 3 seconds, and the front and rear arm green lights of the aircraft will flash quickly.
3. When the front and rear arm lights of the aircraft and the battery level indicator of the remote controller stop flashing, it indicates that the frequency pairing is successfully done.

4.10 Selecting Stick Mode

4.10.1 Stick Modes

When using the remote controller to operate the aircraft, you need to know the current stick mode of the remote controller and fly with caution.
Three stick modes are available, that is, Mode 1, Mode 2 (default), and Mode 3.

■ **Mode 1**

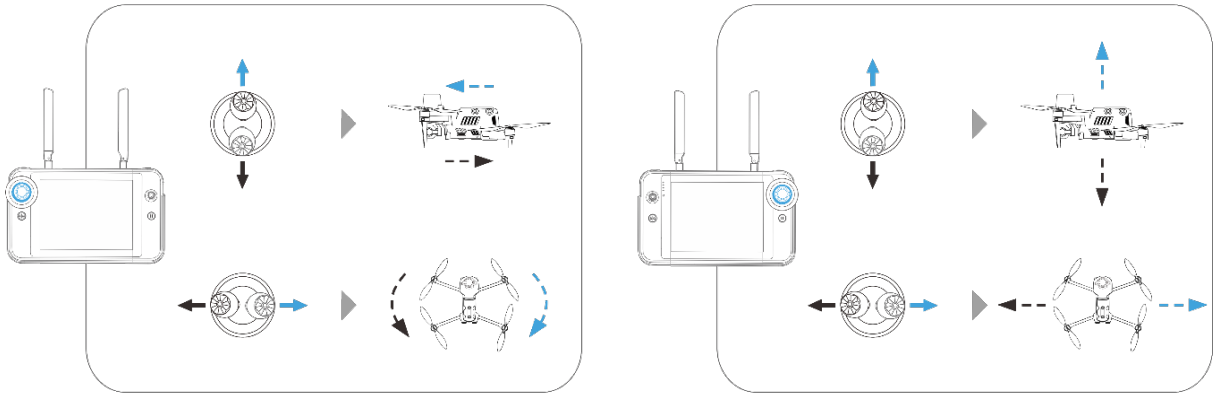

Fig 4-13 Mode 1

Table 4-11 Mode 1 Details

Stick	Move Up/Down	Move Left/Right
Left Command Stick	Controls the forward and backward movement of the aircraft	Controls the heading of the aircraft
Right Command Stick	Controls the ascent and descent of the aircraft	Controls the left or right movement of the aircraft

■ Mode 2

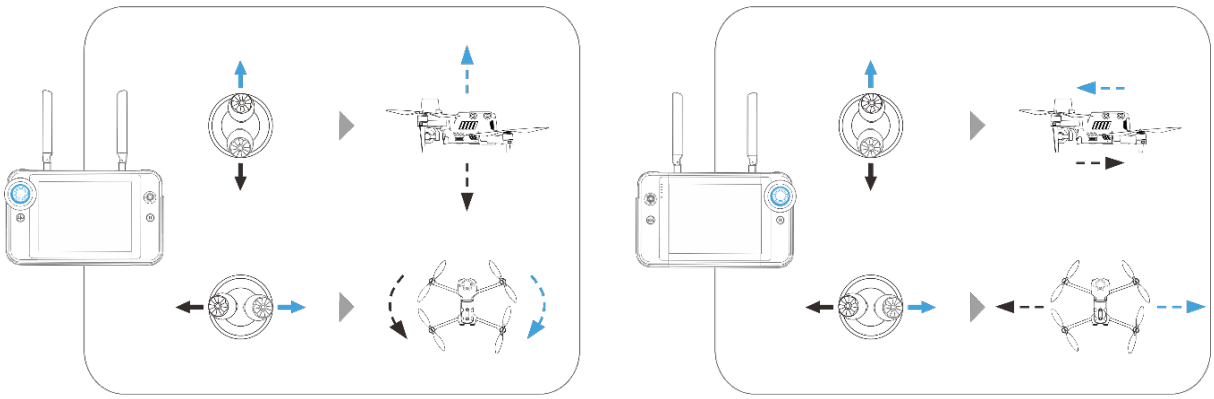

Fig 4-14 Mode 2

Table 4-12 Mode 2 Details

Stick	Move Up/Down	Move Left/Right
Left Command Stick	Controls the ascent and descent of the aircraft	Controls the heading of the aircraft
Right Command Stick	Controls the forward and backward movement of the aircraft	Controls the left or right movement of the aircraft

■ Mode 3

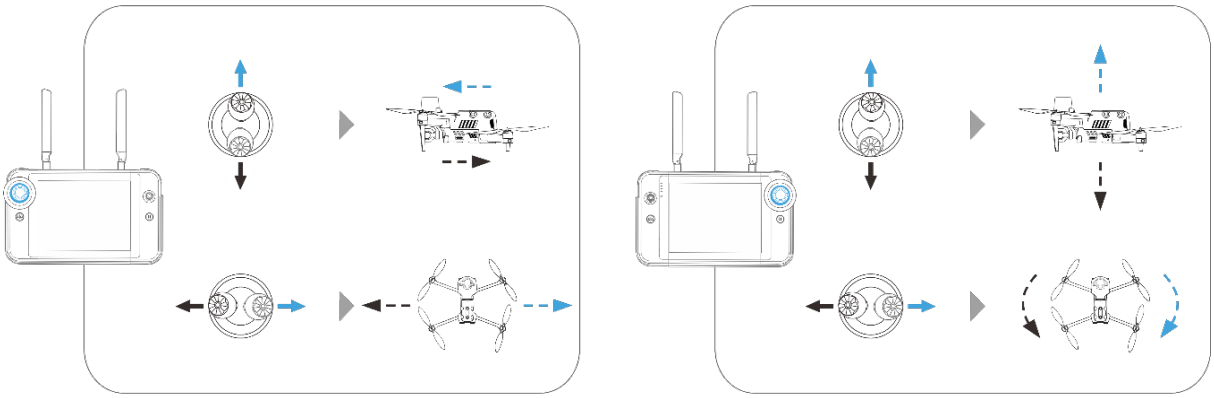

Fig 4-15 Mode 3

Table 4-13 Mode 3 Details

Stick	Move Up/Down	Move Left/Right
Left Command Stick	Controls the forward and backward movement of the aircraft	Controls the left or right movement of the aircraft

Right Command Stick	Controls the ascent and descent of the aircraft	Controls the heading of the aircraft

⚠ Warning

- Do not hand over the remote controller to persons who have not learned how to use the remote controller.
- If you are operating the aircraft for the first time, please keep the force gentle when moving the command sticks until you are familiar with the operation.
- The flight speed of the aircraft is proportional to the degree of the command stick movement. When there are people or obstacles near the aircraft, please do not move the stick excessively.

4.10.2 Setting Stick Mode

You can set the stick mode according to your preference. For detailed setting instructions, please refer to "6.4 Settings Interface" in Chapter 6. The default stick mode of the remote controller is "Mode 2".

Table 4-14 Default Control Mode (Mode 2)

Mode 2	Aircraft Flight Status	Control Method
Left Command Stick Move Up or Down 	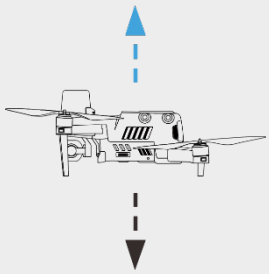	The up-and-down direction of the left stick is the throttle stick, which is used to control the vertical lift of the aircraft. Push the stick up, and the aircraft will rise vertically; pull the stick down, and the aircraft will descend vertically. When the stick is returned to the center, the altitude of the aircraft remains unchanged. When the aircraft takes off, please push the stick up to above the center, and the aircraft can lift off the ground.
Left Command Stick Move Left or Right 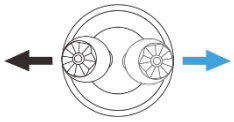	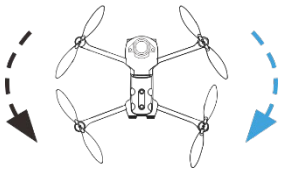	The left-and-right direction of the left stick is the yaw stick, which is used to control the heading of the aircraft. Push the stick to the left, and the aircraft will rotate counterclockwise; push the stick to the right, and the aircraft will rotate clockwise. When the stick is returned to the center, the rotational angular velocity of the aircraft is zero, and the aircraft does not rotate at this time.

		The larger the degree of the stick movement, the greater the rotational angular velocity of the aircraft.
Right Command Stick Move Up or Down		The up-and-down direction of the right stick is the pitch stick, which is used to control the flight of the aircraft in the forward and backward directions. Push the stick up, and the aircraft will tilt forward and fly towards the front of the nose; pull the stick down, and the aircraft will tilt backward and fly towards the tail of the aircraft. When the stick is returned to the center, the aircraft remains horizontal in the forward and backward directions. The larger the degree of the stick movement, the faster the flight speed of the aircraft, and the larger the tilt angle of the aircraft.
Right Command Stick Move Left or Right		The left-and-right direction of the right stick is the roll stick, which is used to control the flight of the aircraft in the left and right directions. Push the stick to the left, and the aircraft will tilt to the left and fly to the left of the nose; pull the stick to the right, and the aircraft will tilt to the right and fly to the right of the nose. When the stick is returned to the center, the aircraft remains horizontal in the left and -right directions. The larger the degree of the stick movement, the faster the flight speed of the aircraft, and the larger the tilt angle of the aircraft.

Remarks

- When controlling the aircraft for landing, pull the throttle stick down to its lowest position. In this case, the aircraft will descend to an altitude of 1.2 meter above the ground, and then it will perform an assisted landing and automatically descend slowly.

4.10.3 Starting/Stopping the Aircraft Motor

Table 4-15 Start/Stop the Aircraft Motor

Process	Stick Operation	Description
Start the aircraft motor when the aircraft is powered on	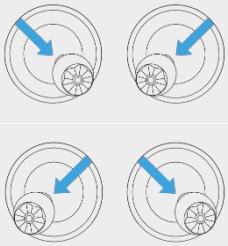	Power on the aircraft, and the aircraft will automatically perform a self-check. Then simultaneously move the left and right sticks inward or outward for 2 seconds, as shown in the figure, to start the aircraft motor.
Stop the aircraft motor when the aircraft is landing	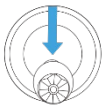	When the aircraft is in landing state, pull the throttle stick down to its lowest position, as shown in the figure, and wait for the aircraft to land until the motor stops.
	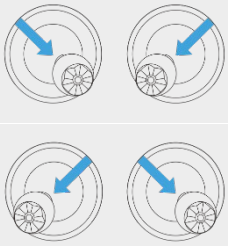	When the aircraft is in landing state, simultaneously move the left and right sticks inward or outward, as shown in the figure, until the motor stops.

⚠ Warning

- When taking off and landing the aircraft, stay away from people, vehicles, and other moving objects.
- The aircraft will initiate a forced landing in case of sensor anomalies or critically low battery levels.

4.11 Remote Controller Keys

4.11.1 Custom Keys C1 and C2

You can customize the functions of the C1 and C2 custom keys according to your preferences. For detailed setting instructions, please refer to “6.4 Settings Interface” in Chapter 6.

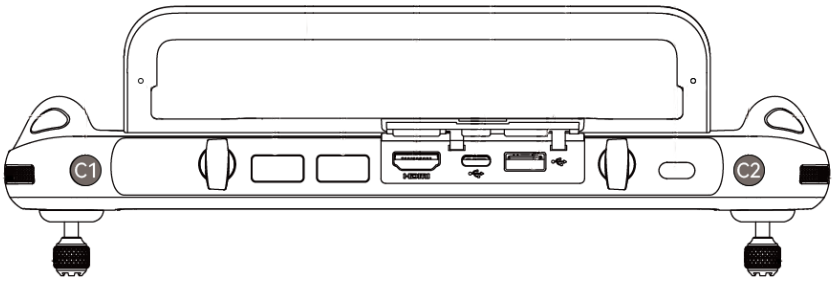

Fig 4-16 Custom Keys C1 and C2

Table 4-16 C1 and C2 Customizable Settings

No.	Function	Description
1	Visual Obstacle Avoidance On/Off	Press to trigger: turn on/off the visual sensing system. When this function is enabled, the aircraft will automatically hover when it detects obstacles in the field of view.
2	AE Lock/Unlock	Press to trigger: Gimbal camera exposure lock or unlock.
3	Gimbal Pitch Recenter/90°	Press to trigger: Switch the gimbal angle. Gimbal Pitch Recenter: The heading angle of the gimbal returns from the current position to be consistent with the heading of the aircraft nose, and the gimbal pitch angle returns to a 0° direction from the current angle; Gimbal Pitch 90°: The heading angle of the gimbal returns from the current position to be consistent with the heading of the aircraft nose, and the gimbal pitch angle rotates to a 90° direction from the current angle.

⚠ Warning

- When the speed mode of the aircraft is switched to “Ludicrous”, the visual obstacle avoidance system will be turned off.

4.11.2 Take-off/Return-to-Home Button and Pause Button

⚠ Warning

- The auto-return function will only be enabled when the GNSS signal is good.
- If the obstacle avoidance system is disabled during a return flight, the aircraft will not be able to automatically avoid obstacles.
- Before using the auto-return function, you need to set the home point in advance in the Autel Explorer App. For more information, please refer to “6.4 Settings Interface” in Chapter 6. If the home point is not set, the aircraft will take the take-off point as the home point by default.

To manually activate the auto-return function, press and hold the take-off/return-to-home button "⊙" on the remote controller for 2 seconds until the remote controller emits a "beep" sound. Upon receiving the command, the aircraft will automatically return and land at the preset home point.
When the aircraft is in the auto-return state, the remote controller will be disabled. You can short press the pause button "⊙" until the remote controller emits a "beep" sound to pause the auto-return, or long press the pause button "⊙" for 2 seconds until the remote controller emits a "beep" sound to exit the auto-return. After pausing or exiting the auto-return, you can reactivate the remote controller for controlling the aircraft.

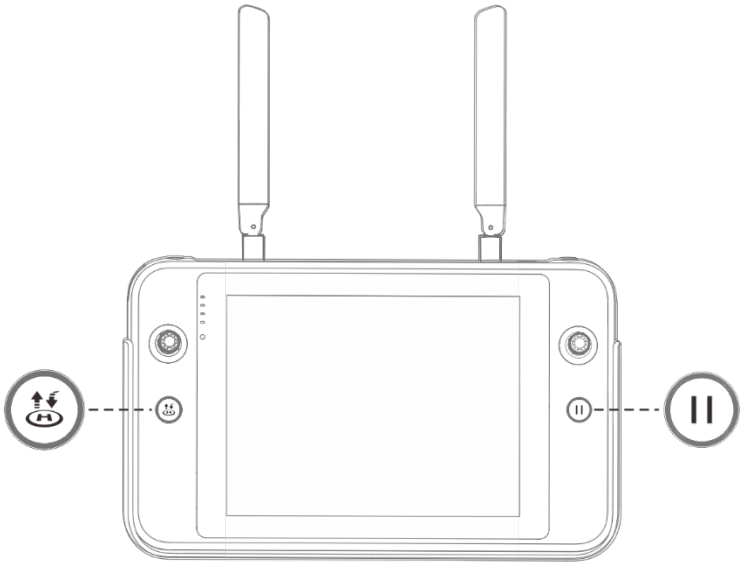

Fig 4-17 Take-off/Return-to-Home Button and Pause Button

Tips
● When the aircraft pauses an auto-return, it will hover in place. To resume the auto-return, press the pause button "⊙" again until the remote controller emits a "beep" sound.

Warning
● If the auto-return home point is not suitable for the aircraft to land (such as uneven ground and crowds), please exit the auto-return before the aircraft reaches the home point, and then manually resume control to land.

4.12 Turning On/Off the Remote Controller Prompt Sound

In some scenarios, the remote controller will send a prompt sound, such as the screen lock sound and power-on sound.

Tips

- You can access the system settings app from the main interface of the remote controller, and then drag the volume slider in “Sound” to adjust the media volume and notification volume separately.

4.13 Calibrating the Remote Controller

If the remote controller is abnormal, it is recommended to calibrate it, as shown below.

Table 4-17 Calibrating the Remote Controller

Step	Operation	Diagram
1	Turn on the remote controller. After entering the main interface of the Autel Explorer App, tap “⚙” in the upper-right corner, select "Remote Control", and then tap "Remote Control Calibration". Follow the on-screen instructions to calibrate the remote controller.	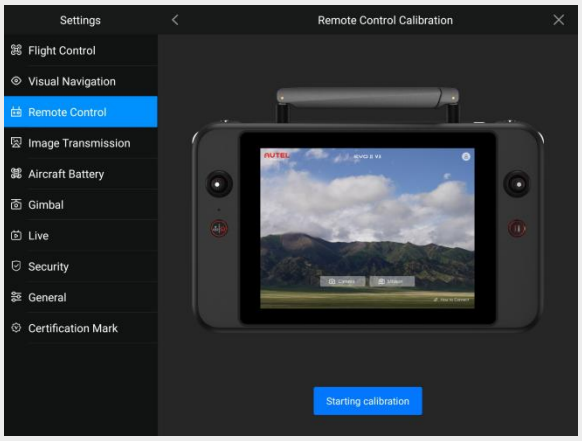
2	Calibration of the dials and command sticks: According to the calibration guide page of the remote controller, move the left and right dial wheels and the left and right sticks according to the directions shown in the figure and hold for 1 second. At this time, a beep will be heard, and the calibration direction icon will be changed from gray to dark blue, indicating that the orientation calibration was successful. There is no order in which directions are calibrated, until all directions are calibrated, the remote controller calibration is done.	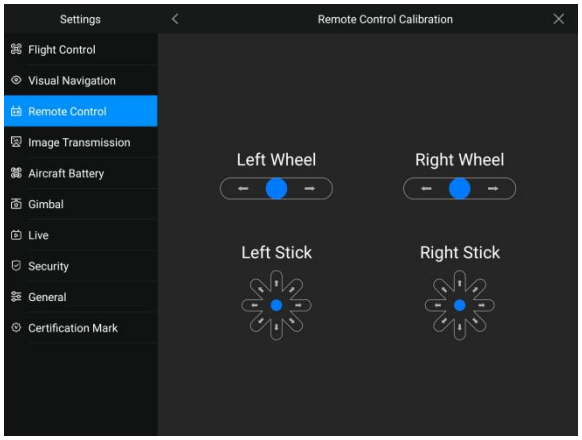

4.14 HDMI Screen Output

The remote controller is equipped with an HDMI interface. The interface allows you to output the real-time screen of the remote controller to supported digital devices such as display screen.

Chapter 5 Smart Battery

5.1 Battery Introduction

The EVO II RTK Series V3 aircraft comes standard with the XE3_7100_1155 smart battery (hereafter referred to as smart battery) as the power battery. This battery is a rechargeable lithium-ion polymer (LiPo) battery and features high energy density and capacity. The smart battery can be charged with an XA3_1320 battery charger.

Remarks

- The battery charger is included as part of the aircraft kit. You do not need to purchase it separately.

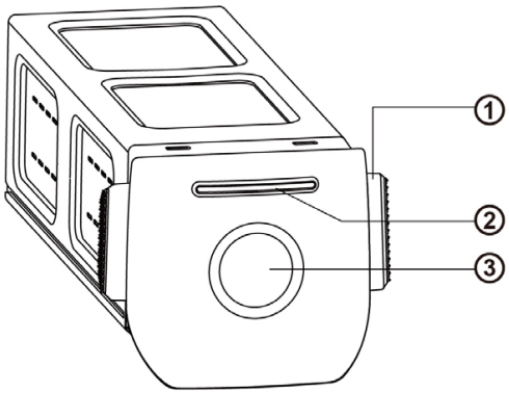

Fig 5-1 Battery Appearance

Table 5-1 Battery Appearance Details

No.	Name	Description
1	Unlock Button	To remove the battery from the aircraft, press and hold the unlock buttons on both sides and pull out the battery.
2	Battery Level Indicator	Used to display the current battery level of the smart battery in normal situations.
3	Power Button	Long press the power button for 3s to turn on or turn off the battery.

5.2 Smart Battery Functions

The smart battery has the following functions:

■ Battery Level Display

The smart battery has a built-in battery level indicator, which shows the current battery level of the smart battery.

■ Communication

The aircraft can obtain real-time battery information, such as voltage, current, battery level, and battery temperature, through the communication interface on the smart battery.

■ Power Saving Mode

The smart battery will automatically shut down after 30 minutes of inactivity to reduce power consumption.

■ Dust and water resistance

After correctly installing the intelligent battery to the aircraft, the battery complies with IP43 protection level.

■ Ultra-low Power Mode

When the smart battery is idle for 6 days and the battery level is less than 11.6V, the battery will enter the ultra-low power mode to reduce self-consumption. When entering ultra-low power mode, it needs to be activated by a charger before it can continue to use normally.

■ Self-discharge Protection

If the smart battery is stored in a high-temperature environment or not used for 6 days with a high battery level, the self-discharge protection will be activated. The smart battery will automatically discharge to a battery level of about 60% (by default) and the discharge process takes 2-3 days. Users can set the start discharge time in the Autel Explorer App.

Tips
● Although the battery has no indication of a self-discharge cycle, you may notice that the battery is slightly warm, which is normal.

■ Sleep Mode Protection

If the smart battery has a low battery level, it will automatically enter sleep mode to prevent over-discharge. In this mode, the smart battery does not respond when the power button is pressed. To wake up the battery, you can connect it to a battery charger.

■ Charge Temperature Protection

The smart battery will stop charging when its temperature is lower than 5°C or higher than 45°C during charging, as charging the battery under such temperatures will damage the battery.

■ Overcurrent Protection

The smart battery will stop charging when the charging current exceeds 8A, as charging the battery with a high current can severely damage the battery.

■ Overcharge Protection

Charging will stop automatically when the smart battery is fully charged, as overcharging can severely damage the battery.

■ Balance Protection

The voltage of each battery cell in the smart battery is automatically kept balanced to protect the battery and maximize the performance of the battery.

■ Short Circuit Protection

Once a short circuit is detected, the power supply of the smart battery will be cut off to protect the battery.

⚠ Warning
● Before using the smart battery, please carefully read and strictly follow the requirements in this Manual, “Battery Safety Operation Guidelines”, and “Disclaimer”, and those on the battery's surface sticker. The user shall undertake all consequences if he/she fails to follow the usage requirements.

5.3 Smart Battery Usage

- Please use a smart battery within the appropriate temperature range (0℃ ~ +40℃). Using it in too high or low temperatures will affect the battery’s safety and lifespan and may cause spontaneous battery combustion or permanent damage to the battery.
- Do not use the aircraft in a strong electrostatic (such as thunderstorms) or electromagnetic environment. Otherwise, some functions of the smart battery may fail (e.g., abnormal battery output and power failure), resulting in serious aircraft malfunctions.
- Do not use a smart battery that has ever been dropped from the aircraft or subjected to external impacts.
- Do not use a water-soaked smart battery or immerse a smart battery in water or other liquids. Water contact inside the battery may cause corrosion, resulting in spontaneous battery combustion and even an explosion.
- Do not use a smart battery that emits smoke, is bulged, leaks liquids, or has a damaged appearance.
- The liquid inside the smart battery is corrosive. If it leaks, please keep away from it. If it accidentally contacts your skin or eyes, rinse immediately with clean water for at least 15 minutes and seek medical attention.
- Do not disassemble, puncture, strike, crush, or burn a smart battery in any way. Otherwise, it may lead to battery combustion or even explosion.
- Do not short-circuit the positive and negative terminals of a smart battery.
- If the battery connector of a smart battery is dirty, use a dry cloth to clean it. Otherwise, it may cause poor contact, leading to energy loss or charging failure.
- Before replacing the smart battery of the aircraft, make sure that the battery connector, battery compartment interface, battery surface, and battery compartment surface are dry and free of water, and then insert the battery into the aircraft.

5.3.1 Installing/Removing the Smart Battery

Table 5-2 Install the Smart Battery

Step	Operation	Diagram
1	Turn off the smart battery before installing the battery.	

2	Slowly insert the smart battery into the battery compartment on the aircraft fuselage, and you will hear a clicking sound when the battery is in place.	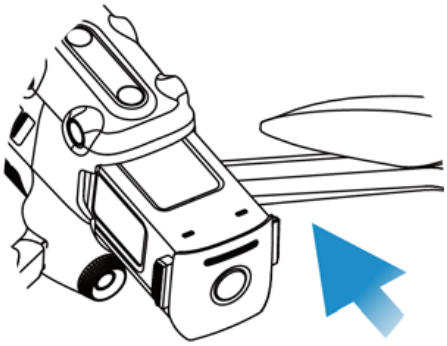

⚠ Warning

- If the smart battery is not installed properly, it may cause the battery to fall off during the flight, damage the aircraft, or even cause personal injury.
- Before installing the smart battery on the aircraft, make sure that the battery is turned off.

Table 5-3 Remove the Smart Battery

Step	Operation	Diagram
1	Turn off the smart battery before removing the battery.	
2	Press and hold the unlock buttons on both sides of the smart battery and slowly pull out the battery.	

❗ Important

- The unlock buttons of the smart battery are wearable parts. Please do not press them hard to avoid any possible damage to the internal structure of the battery.

5.3.2 Turning On/Off the Smart Battery

■ Turning On the Smart Battery

When the smart battery is turned off, press and hold the power button for 3 seconds to turn on the battery.

■ Turning Off the Smart Battery

When the smart battery is turned on, press and hold the power button for 3 seconds to turn off the battery.

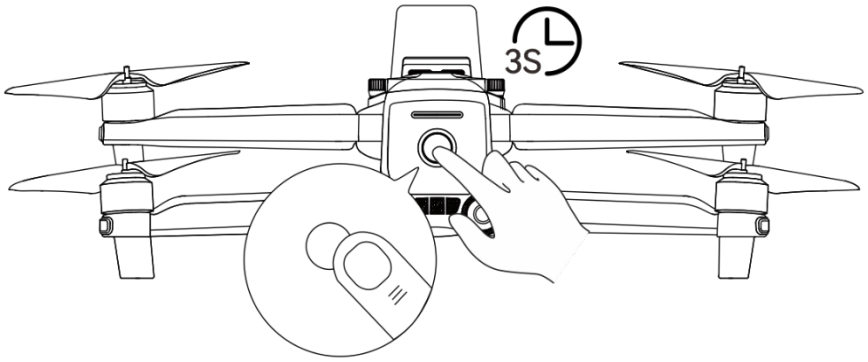

Fig 5-2 Turn On or Off the Smart Battery

Important

- If the smart battery is not installed in the aircraft, it is not recommended to turn on/off the battery, and attention should be paid to insulation protection at the battery connector.
- Before removing the smart battery from the aircraft, turn off the battery. The LED1 and LED4 battery level indicators on the smart battery will blink 5 times to indicate that the aircraft is shutting down. Remove the smart battery from the aircraft after all battery level indicators are off.

5.3.3 Checking Battery Level

When the smart battery is off, short press the battery power button for 1 second to check the current battery level through the battery level indicator status.

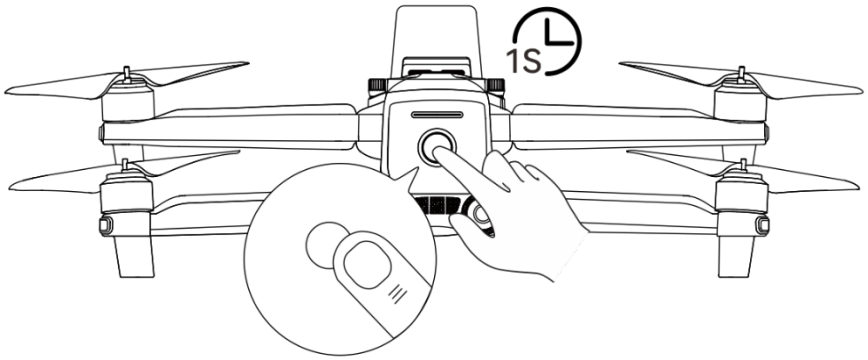

Fig 5-3 Checking Battery Level

Table 5-4 Battery Level Indicator Status (While Not Charging)

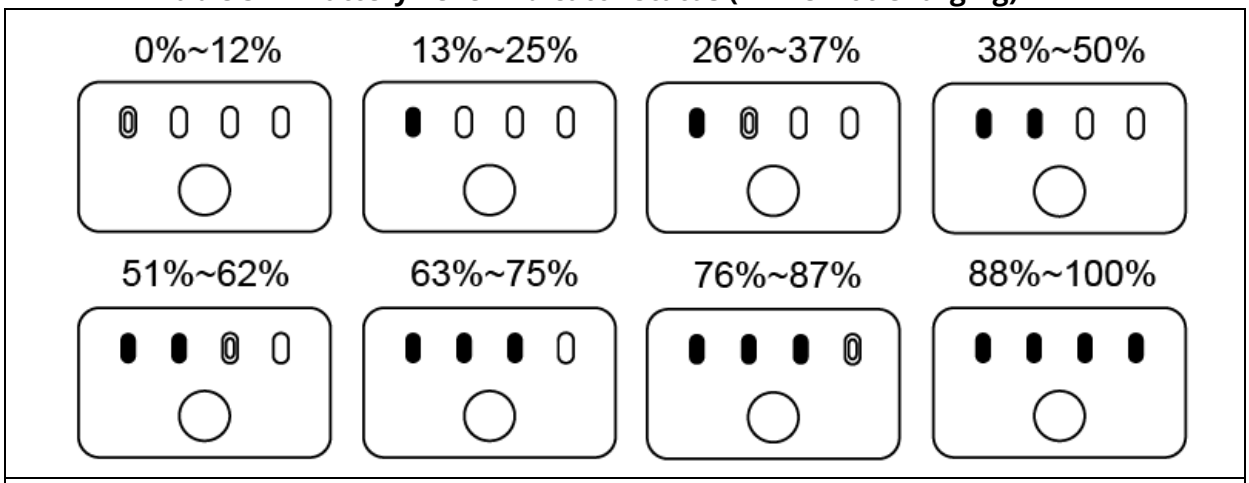

: Green light is always on : Green light blinking : Off

Tips

- After the aircraft is connected to the remote controller, you can check the current smart battery level of the aircraft in the top status bar or on the "Aircraft Battery" page of the Autel Explorer App. For more information, please refer to “6.3 Status Bar” and “6.4 Settings Interface” in Chapter 6.

5.3.4 Charging the Smart Battery

Connect the charging interface of the official battery charger to the notch of the metal electrode of the smart battery, and connect the plug to the AC power supply (100-240 V~ 50/60 Hz).

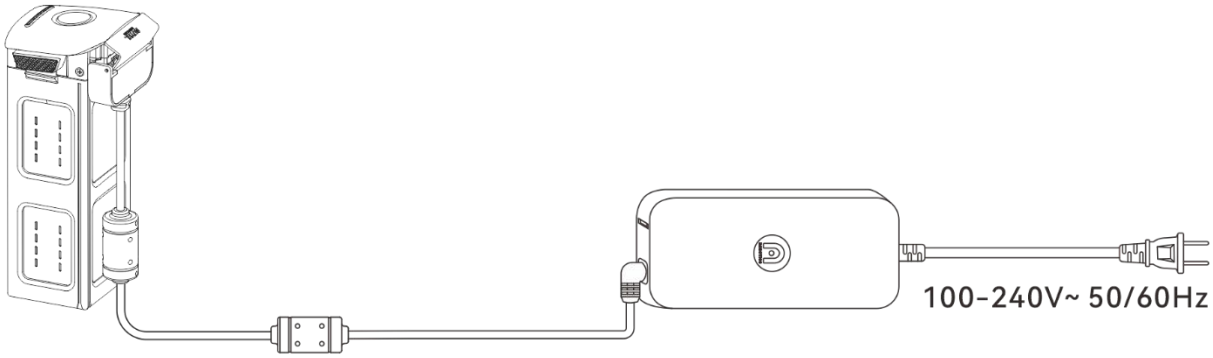

Fig 5-4 Use the Battery Charger to Charge the Smart Battery

Table 5-5 Battery Level Indicator Status (While Charging)

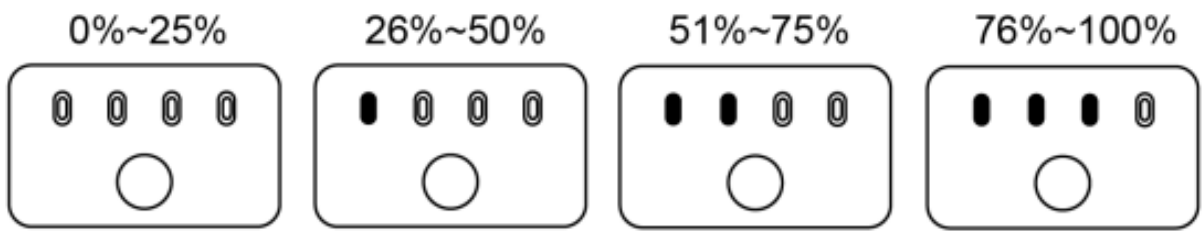

▮: Green light is always on ▯: Green light blinking

⚠ Warning

- Do not charge a battery that emits smoke, is bulged, leaks liquids, or has a damaged appearance.
- Do not use damaged charging devices to charge the smart battery.
- Modifying the official smart battery or charging device provided by Autel Robotics is prohibited.
- Only use the battery and charging device provided by Autel Robotics. Autel Robotics is not responsible for any consequences, such as battery accidents and flight failure, caused by the use of third-party batteries or charging devices.
- Keep the smart battery away from flammable and explosive items during charging.
- After the smart battery is fully charged, disconnect the connection between the charger and the smart battery and power supply promptly.
- After flight, it is recommended to wait until the smart battery naturally cools down to an appropriate temperature before charging the battery. If the temperature of the smart battery is higher than 45°C, when the battery is connected to the charging device, the battery temperature protection function will be activated, and the battery cannot be charged until its temperature drops below 40°C.

Remarks

- It is recommended to fully charge the smart battery of the aircraft before the aircraft takes off.
- Generally, it takes about 90 minutes to fully charge the smart battery of the aircraft, but the charging time is related to the remaining battery level.

Table 5-6 Other Battery Indicator Warning Instructions

LED1	LED2	LED3	LED4	Warning Description
▯	▯	▯	▯	The temperature is too high for charging.
▯	▯	▯	▯	The charging current is too high, which causes a short circuit.
▯	▯	▯	▯	A circuit overcurrent, a circuit overload, or a short circuit occurs during battery discharge.

: Indicator light blinking : Off

5.4 Storing and Transporting the Smart Battery

When storing the smart battery, keep the battery away from water or heat sources and store it in a dry, well-ventilated environment at room temperature.
Ideal storage conditions: The battery level is at around 60%, the ambient temperature is between 22°C to 28°C, and the ambient humidity is 65%±20% RH.
The energy of the XE3_7100_1155 smart battery is 82 Wh (capacity is 7100 mAh). Please refer to local lithium battery transportation policies for battery shipping or carrying.

⚠ Warning

- Before storing or transporting the smart battery, please turn off the battery.
- Store the smart battery out of the reach of children and pets.
- Store the smart battery away from direct sunlight, water, or reactive chemicals.
- Do not expose the smart battery to open flame, explosives, or other hazards.

Do not store the smart battery in extreme temperatures. Otherwise, the lifespan of the battery may be shortened and the battery may even become damaged or ineffective. If the battery is not used for more than 1 day, it should be stored below 30°C (at room temperature).

- Do not place the smart battery in a microwave or pressure cooker.

Do not place the smart battery directly on conductive surfaces (such as metal shells or panels).

- Do not place heavy objects on the smart battery. When subject to an external force, the battery may be damaged or even catch fire or explode.
- Do not store or transport the smart battery with sharp objects, watches, metal necklaces, earrings, or other metal items.
- Do not transport batteries that have a damaged appearance or a battery level of more than 30%.
- If the smart battery is left idle for a long time, please charge it every three months to avoid a shortened battery lifespan resulting from long-term low battery levels.

5.5 Maintaining and Handling the Smart Battery

5.5.1 Maintaining the Smart Battery

In order to maintain the activity of the smart battery of the aircraft, it is recommended to perform battery maintenance if any of the following conditions are met:

- It is recommended to perform battery maintenance for the smart battery every 50 times of battery cycle.
- The idle time of the smart battery reaches 3 months.
- Occasionally, there are situations that affect the lifespan of the smart battery. In this case, you can try maintenance and repair.
- The Autel Explorer App reminds you when the smart battery needs maintenance.

The following battery maintenance check items are available for the smart battery:

1. Perform a standard charge and discharge operation on the smart battery.
2. Insert the smart battery into the aircraft and turn on the power. Check the battery information through the Autel Explorer App, whether the voltage difference between the battery cells is less than 0.1 V, and whether the battery firmware is up to date.
3. Check whether the smart battery is bulged, leaked, or damaged.
4. Check the battery connector for dirt, damage, or rust.

5.5.2 Standard Charging and Discharging Process

Use the maintenance charging mode of the original charger, and proceed as follows:
1. Use the battery charger included in the standard aircraft kit to charge the smart battery to 100% and let the battery sit for 1 hour.
2. Insert the smart battery into the aircraft to fly, control the aircraft to land when the remaining battery level is less than 20%, and then take out the battery.
3. Let the smart battery sit for 8 hours.
4. After the above operations are completed, a standard battery charging and discharging operation is completed.

5.5.3 Smart Battery Replacement Standards

- There are obvious bulges, leakage, and damage on the smart battery surface.
- Damage to or irreparable rust on the metal contacts at the power supply interface of the smart battery.
- After the number of cycles of the smart battery reaches 200, it is recommended to replace the battery with a new one.
- After 2 consecutive standard charge and discharge operations, if the abnormal battery still cannot be repaired, it is recommended to replace it with a new one.

5.5.4 Recycling the Smart Battery

If the smart battery is discarded due to damage, leakage, or other issues that compromise the integrity of the battery shell, it is recommended to completely immerse the battery in an insulated bucket filled with 5% salt water for more than 48 hours until the battery is completely discharged.
If the smart battery is normally retired, confirm that it is completely discharged, and then properly recycle it according to local lithium battery waste disposal policies to avoid environmental pollution.

Important

- When the smart battery catches fire, please use solid fire extinguishers such as sand or dry powder extinguishers.

Chapter 6 Autel Explorer App

6.1 Software introduction

Autel Explorer App is the flight software developed by Autel Robotics for industry applications. The software integrates a variety of professional functions, which is easy to improve efficiency. Through a variety of built-in intelligent flight functions, the aircraft can be highly intelligent operation, enabling industrial applications.

Tips

- Please be aware that some UI interfaces of Autel Explorer App may be different due to version updates.

6.2 Main Interface

After Smart Controller pair with the aircraft, Autel Explorer App will automatically enter the main interface.

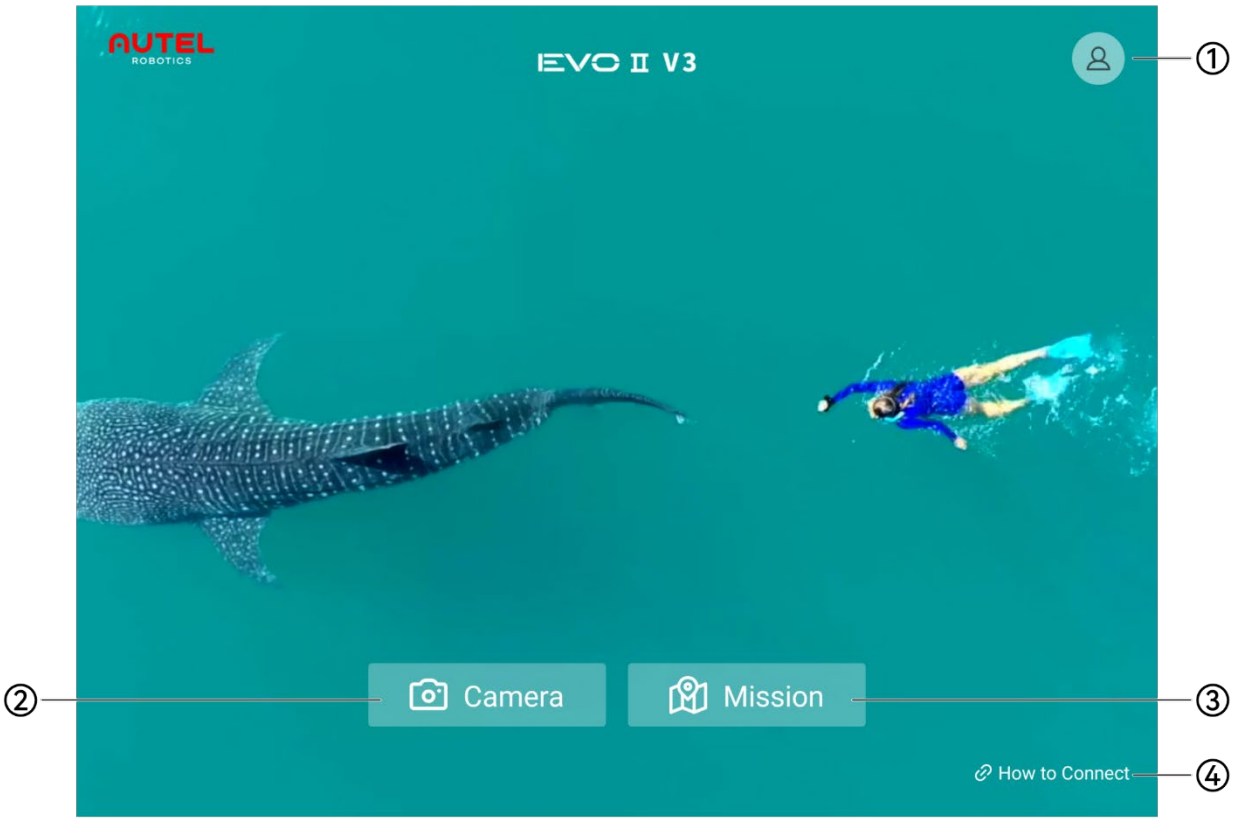

Fig 6-1 Main Interface of the Autel Explorer App

Table 6-1 Details of the Main Interface of the Autel Explorer App

No.	Name	Description
1	Personal Account Center	Register or log in to an Autel account to use the relevant cloud services provided by Autel Robotics.
2	“Camera” mode	After entering this mode (Intelligent Photo), you can choose following mission scenarios: Manual flight (default), Panorama, Hyperlapse, Orbit Hyperlapse, Dynamic Track, Smart Orbit, Orbit.
3	“Mission” mode	After entering this mode (Mission), you can choose following mission scenarios: waypoint mission, rectangular mission, polygon mission, oblique, mission recording, and Slope.
4	Connection Wizard	Prompts how to pair between the aircraft and the remote controller.

6.3 Status Bar

Fig 6-2 Status Bar of the Autel Explorer App

Table 6-2 Details of the Status Bar of the Autel Explorer App

No	Icon	Icon description	description
1		Home Page	Tap this icon to enter the main interface of the Autel Explorer App.
2	Intelligent Photo Manual Flight	Operating Mode	1. Display the current aircraft operating mode and mission scenario. 2. Tap this icon to enter the mission scenario selection page in the current operating mode.
3	21	Remote control power	Displays the power level of the current remote control.
4	RC	Remote control signal status	1. Displays the communication signal status between the current remote control and the aircraft. 2. Tap the icon to display the specific signal status: When the signal is 3-5 cells, the remote control signal is strong. When the signal is 1-2 cells, the remote control signal is weak.

			3. When not connected to the vehicle, the remote control signal is displayed.
5		GNSS Signal status	1. Displays the GNSS location signal status of the current vehicle. 2. Tap the icon to display the specific signal state and the number of star searches. 3. When the vehicle cannot obtain GNSS signal, GNSS signal display Red.
6	78% 23:04	Aircraft power	Shows the current vehicle power situation and the estimated flight time.
7		Obstacle avoidance system	Displays the active status of the aircraft obstacle avoidance system. ➢ Green indicates that the obstacle avoidance system is enabled. ➢ Red color indicates that the obstacle avoidance system is turned off.
8		Map display and positioning	In “Mission” mode, tap this icon to quickly set the map display style and device positioning location.
9		Setting	Tap this icon to enter the "Settings" interface.

6.4 Settings Interface

On the flight page of the Autel Explorer App, tap the "⚙" icon to enter the Settings interface. In the "Settings" interface, users can set the parameters of Flight control, Visual Navigation, Remote control, Image transmission, Aircraft battery, Gimbal, Live broadcast, Data security and General parameters and so on.

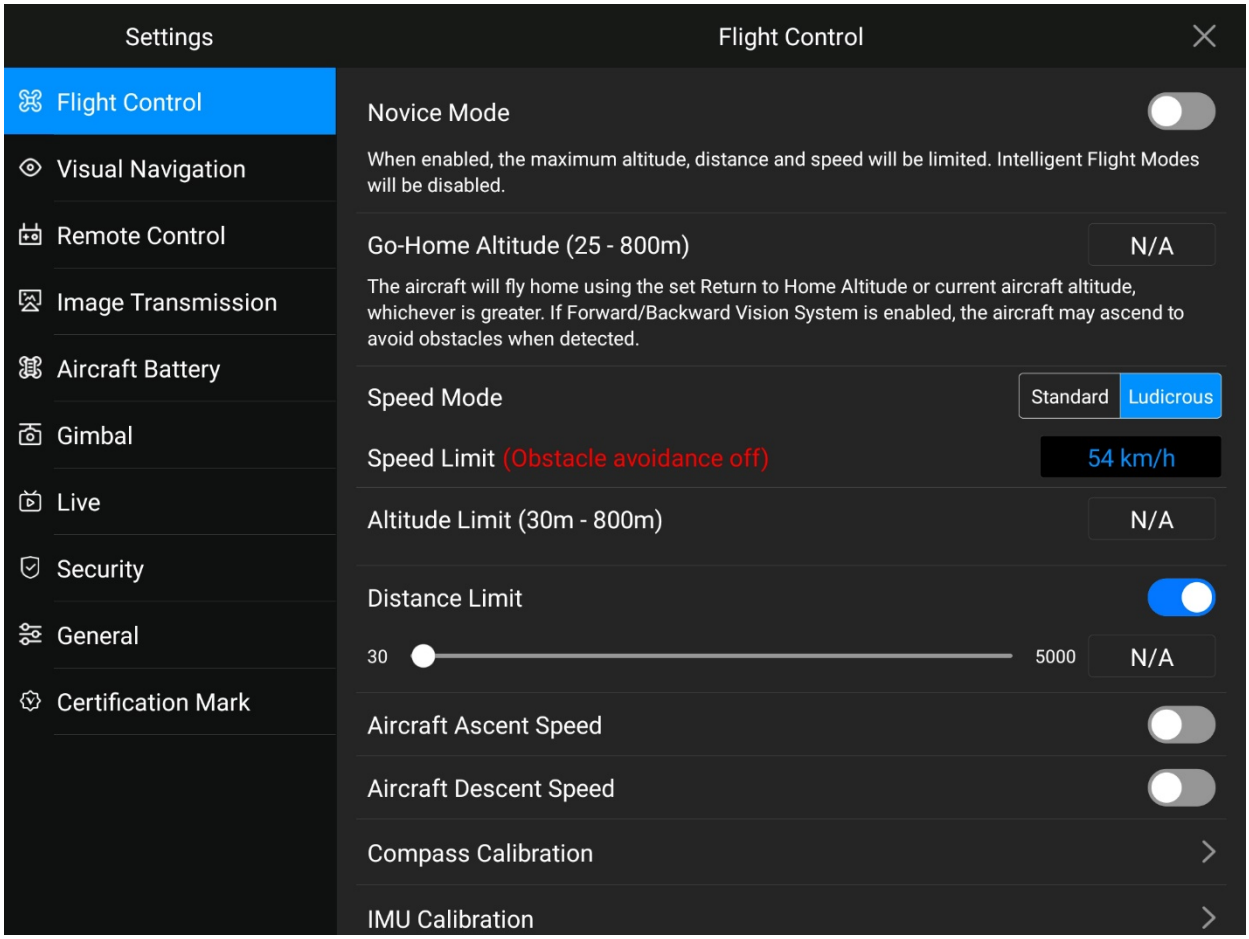

Fig 6-3 Settings Interface

Table 6-3 Details of the Settings Interface of the Autel Explorer App

No.	Module	Setting Item
1	Flight Control	● You can turn on or off the novice mode. ● Set the return altitude of the aircraft, the setting range is 25-800 meters. ● Set the aircraft acceleration mode (flight gear) to "Standard" or "Ludicrous", and select the corresponding maximum speed limit. ● Set the maximum flight altitude limit of the aircraft, the setting range is 30-800 meters. ● Set the maximum flight distance limit of the aircraft, the setting range is 30-5000 meters. ● Set the aircraft's ascent speed and descent speed. ● Perform aircraft compass calibration and IMU calibration. ● The in-flight emergency propeller stop function can be turned on or off. ● Configure the following advanced settings: ➢ You can turn on or off the front and rear arm lights of the aircraft. ➢ Adjust remote control EXP.

		➢ Adjust control sensitivity.
2	RTK*	● The aircraft RTK positioning function can be turned on or off. ● Set the way to receive RTK signals. ● You can turn on or off the RTK service and configure the RTK account and password.
3	Visual Navigation	● The visual obstacle avoidance system can be turned on or off. ● The radar chart display can be turned on or off. ● You can turn on or off the aircraft's downward supplement light. ● Configure the following advanced settings: ➢ The landing protection function can be turned on or off. ➢ The precise landing function can be turned on or off.
4	Remote Control	● Perform remote control calibration. ● Set the remote control command stick mode. ● Perform frequency binding between the remote controller and the aircraft. ● Set custom button functions on the remote control.
5	Image Transmission	● Set the image transmission mode to "HD" or "Smooth".
6	Aircraft Battery	● Check the total voltage of the aircraft battery, battery temperature, remaining power and number of discharges. ● Set the low battery alarm threshold and severe low battery alarm threshold. ● Set the battery self-discharge time. ● View battery details (serial number).
7	Gimbal	● Set the gimbal mode to "Stabilization" or "FPV". Perform gimbal fine-tuning and gimbal automatic calibration. ● Set the gimbal pitch limit. ● Adjust the gimbal pitch EXP, the adjustment range is 1-100.
8	Live	● The RTMP live broadcast function can be turned on or off. After turning it on, the following settings can be made: ➢ Set RTMP address. ➢ Set the live broadcast resolution to "HD" or "Smooth".
9	Security	● Data security encryption can be turned on or off.
10	General	● Set the aircraft home point location to "Current location", "Current aircraft location" or "Customized Home point". ● Set the unit to "metric (km/h)" or "imperial (mph)". ● Set the method for displaying aircraft coordinates to "GPS", "UTM" or "DMS".

		● The voice broadcast function can be turned on or off. ● The obstacle warning sound can be turned on or off. ● The "Don't show again" pop-up box can be reset. ● The Remote ID function can be turned on/off. ● Check for software updates. ● Set the App interface display language, which can be set to English, Simplified Chinese, Traditional Chinese, Japanese, Italian, Korean, Thai and Spanish. ● View related software and hardware version information.
11	Certification Mark	● View the global certification information of the remote control.

Important

- Before flying, please familiarize yourself with the local laws and regulations and enable relevant functions of the aircraft, such as aircraft arm lights, spotlights, and Remote ID broadcast. It may be illegal to turn off the corresponding functions in some countries.

Tips

- RTK setting items are only displayed after the RTK module is installed on the aircraft and the remote controller is connected.

6.5 Operating Mode

Autel Explorer App supports two operating modes: "Camera" mode and "Mission" mode. Each type of operating mode has different mission scenarios. Users can select a operating mode from the Autel Explorer App main interface, or tap the "" icon in the upper left corner of the status bar after entering the flight page to select the mission scenario in the current operating mode.

Table 6-4 Operating Mode and Mission Scenario

No.	Operating Mode	Mission Scenario
1	“Camera” (Intelligent Photo)	● Manual Flight (default) ● Panorama ● Hyperlapse ● Orbit Hyperlapse ● Dynamic Track ● Smart Orbit ● Orbit
2	“Mission”	● Waypoint ● Rectangular ● Polygon

- Oblique
- Recording
- Slope

Important

- Before selecting "Mission" mode, please ensure that the aircraft's GNSS signal is good, otherwise the aircraft will not be able to take off and perform the mission.
- Before flying in “Manual Flight” mission scenario, please ensure that the pilot has the corresponding UA pilot certificate and make sure that the visibility is great.

Tips

- In "Camera" mode, the "Manual Flight" scene is entered by default. The user can tap “Intelligent Photo Manual Flight” on the status bar to select the mission scenario.
- Saved missions can be accessed in the mission scenario selection page of the "Mission" mode, and editing and import operations are supported.

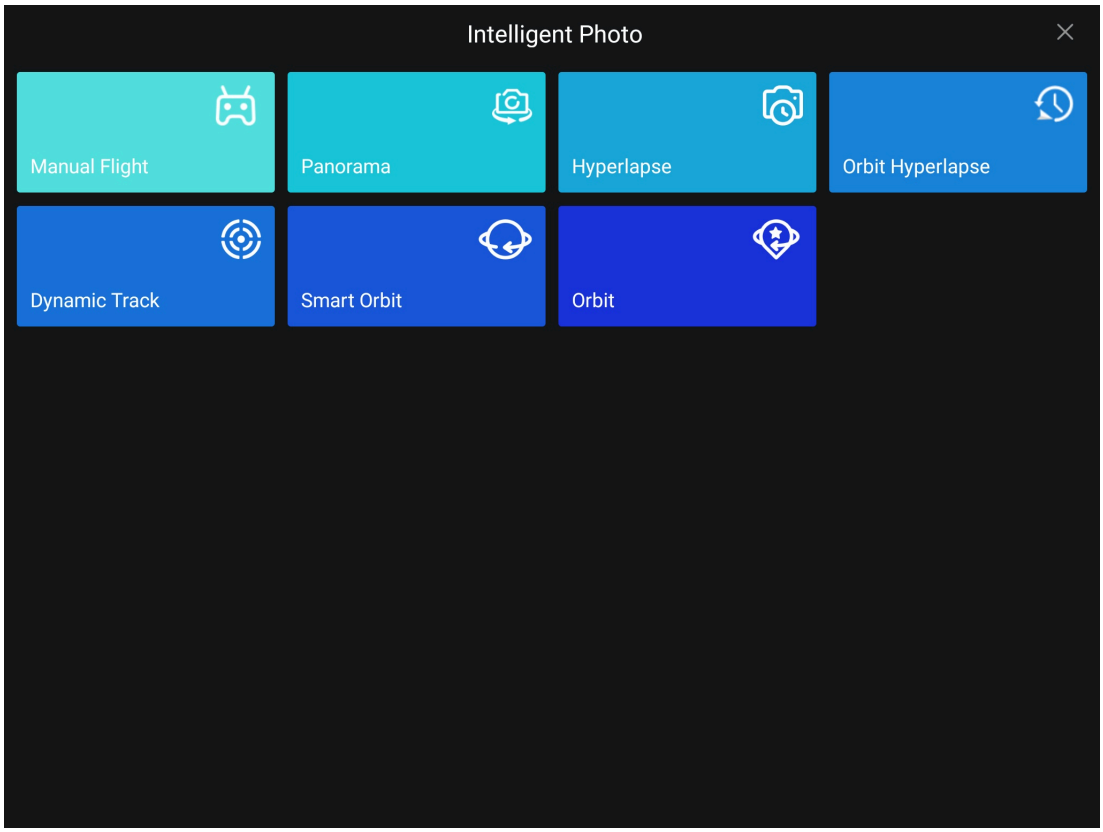

Fig 6-4 the Mission scenario selection page of the "Camera" mode

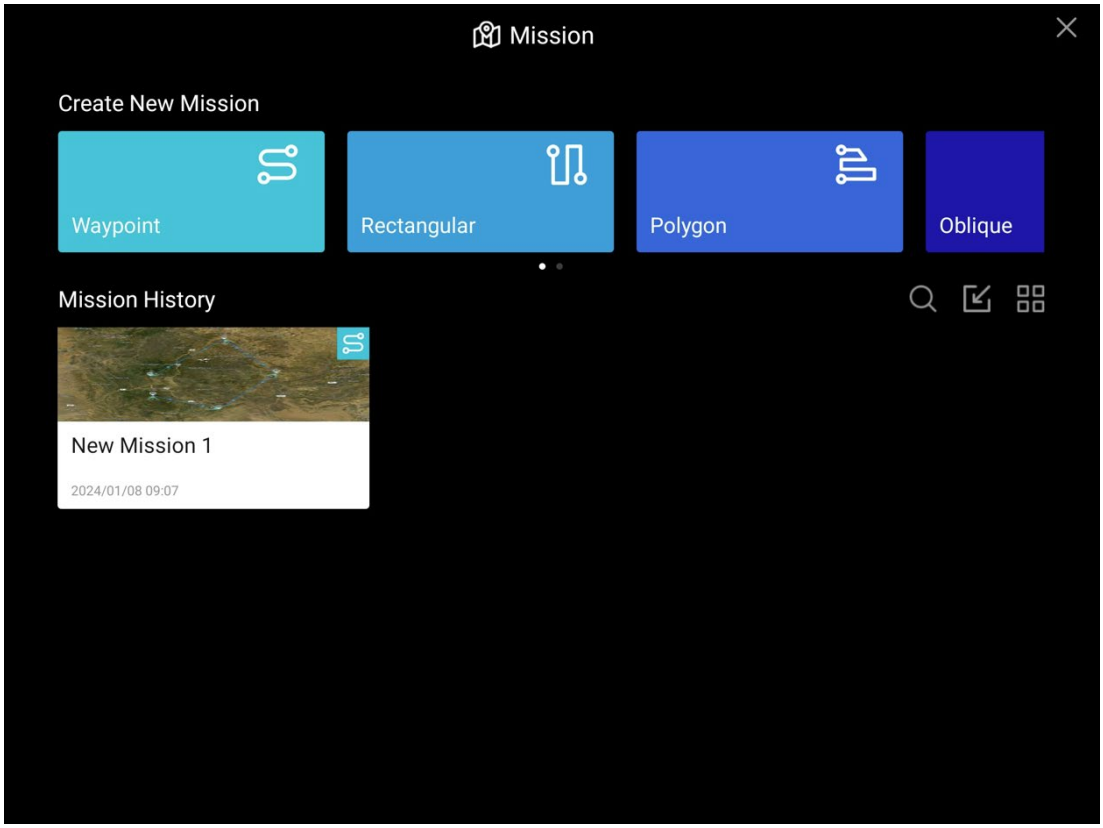

Fig 6-5 the Mission scenario selection page of the "Mission" mode

6.6 Map Interface

Users can plan routes or observe aircraft flight trajectories on the map interface. In "Camera" and "Mission" modes, the map interface and camera interface can be switched back and forth.

Tips
● After the function interface is switched, the selected interface will be displayed in full screen on the remote control, and the other interface will be displayed in the upper left corner of the page in the form of a small window or manually selected to be folded and hidden. ● On the map interface or camera interface, slide to the right from the left edge of the screen to draw out the sidebar. Users can view the aircraft status, current warning messages and flight logs on the sidebar.

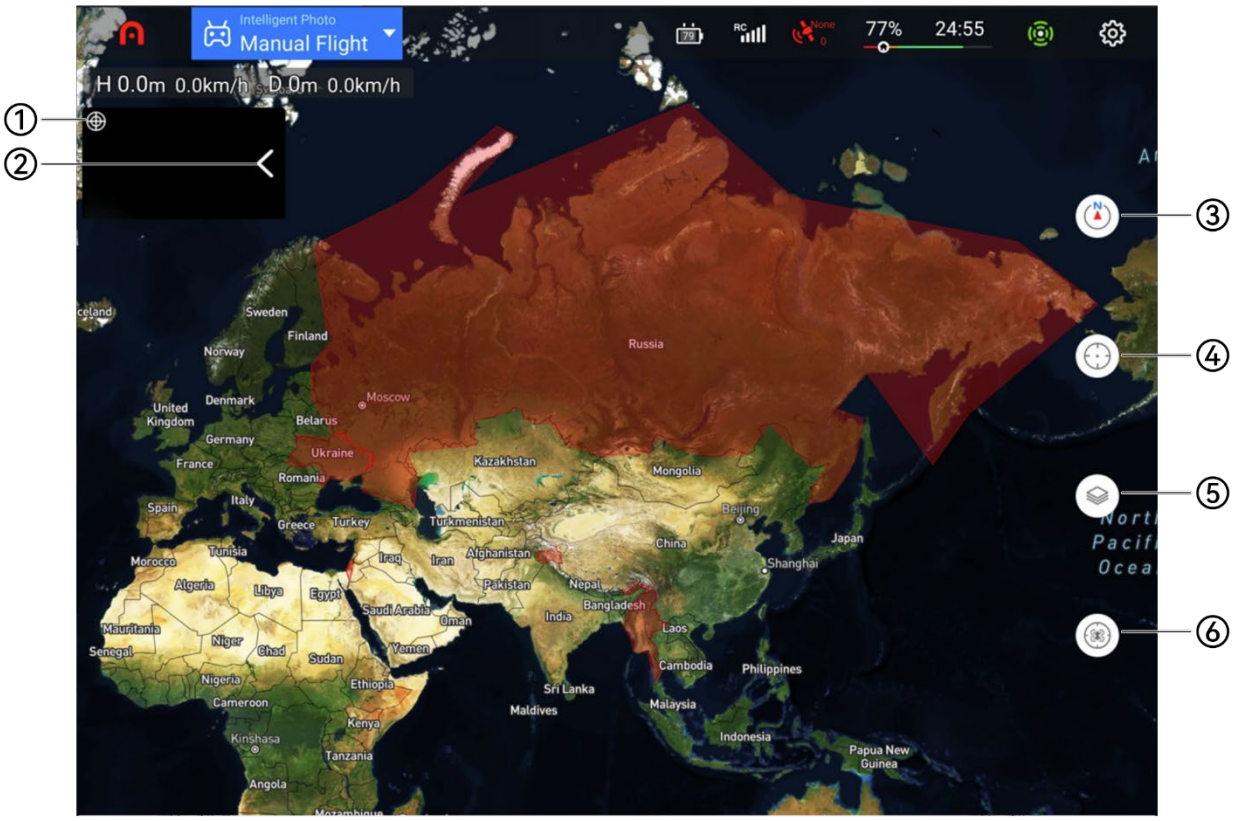

Fig 6-6 Map Interface (In “Camera” Mode)

Table 6-5 Details of the Map Interface

No.	Name	Description
1	Orientation display	Tap this icon to switch the style of displaying the device's orientation information, and support real-time display of the aircraft's flight altitude, flight distance, and flight speed.
2	Camera preview page	Unselected function pages will be displayed in the form of a "small window", which can be folded and hidden. Tap the small window to switch to full-screen display.
3	Map direction lock/unlock	When the map is locked, if you rotate the remote control, the map display direction will not change with the direction of the remote control; when the map is unlocked, if you rotate the remote control, the map display direction will change with the direction of the remote control.
4	Position	You can locate the remote controller, home point, and aircraft position on the map.
5	Map management	You can adjust the map display effect, as well as display flight routes and import geofences.
6	Aircraft information	Aircraft details can be displayed.

6.7 Camera Interface

Users can freely switch between visible light lens and infrared lens display on the camera interface, and support switching photo and video functions and starting live broadcast.

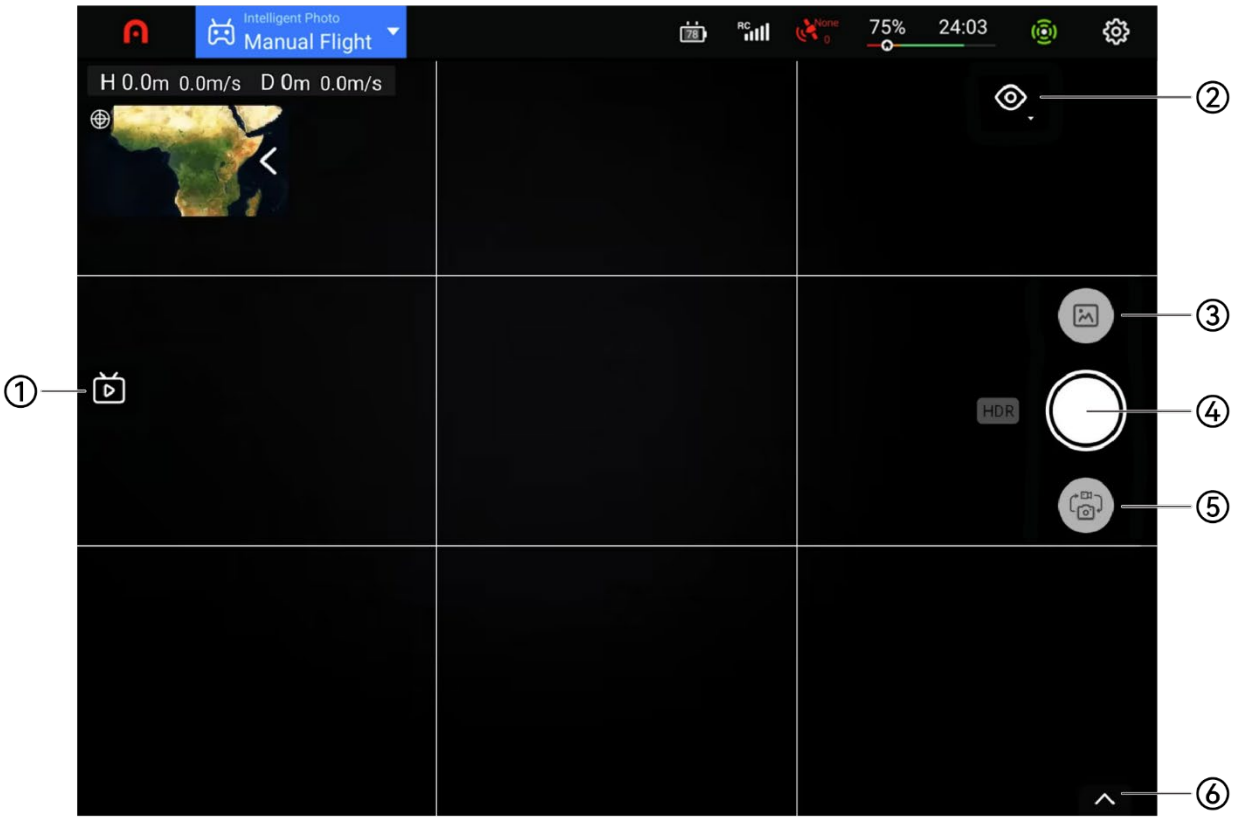

Fig 6-7 Camera Interface (Visible Light)

Table 6-6 Details of the Camera Interface

No.	Name	Description
1	live streaming	Tap this icon to enable the live broadcast function.
2	camera lens switch	You can switch the lens screen of the gimbal camera and perform picture-in-picture display.
3	photo album	Tap this icon to view the materials in the aircraft album and local album and download or delete them.
4	Photo/video button	After switching to the working mode of the corresponding lens, tap the icon to take photos or videos.
5	Mode switch	Tap this icon to switch the working mode of the camera lens (photography/video recording).
6	Camera properties	Tap to display detailed properties of the lens and make camera settings.

Tips

- When selecting the recording working mode, tap the recording button to start recording; tap the recording button again to end recording.
- If the aircraft has an infrared lens (i.e. EVO II Dual 640T RTK V3), when the lens is switched to the infrared lens, the infrared temperature measurement function can be turned on: pointing temperature measurement, area temperature measurement, temperature alarm, picture-in-picture mode, etc.
- The infrared temperature measurement function is divided into two types: high gain mode (-20℃ ~ +150℃) and low gain mode (0 ~ +550℃). The temperature measurement accuracy and temperature measurement range of the two are different.

6.8 Mission

Users can perform automatic flight missions in the "Mission" mode. flight missions are divided into: waypoint missions, rectangular missions, polygon missions, oblique photography, mission recording and Slope mission. Users can tap the corresponding mission on the mission scenario selection page icon to enter the related task editing page.

Tips

- When performing a flight mission, please ensure that the aircraft has sufficient power and a good GNSS signal, otherwise it will not be able to take off.

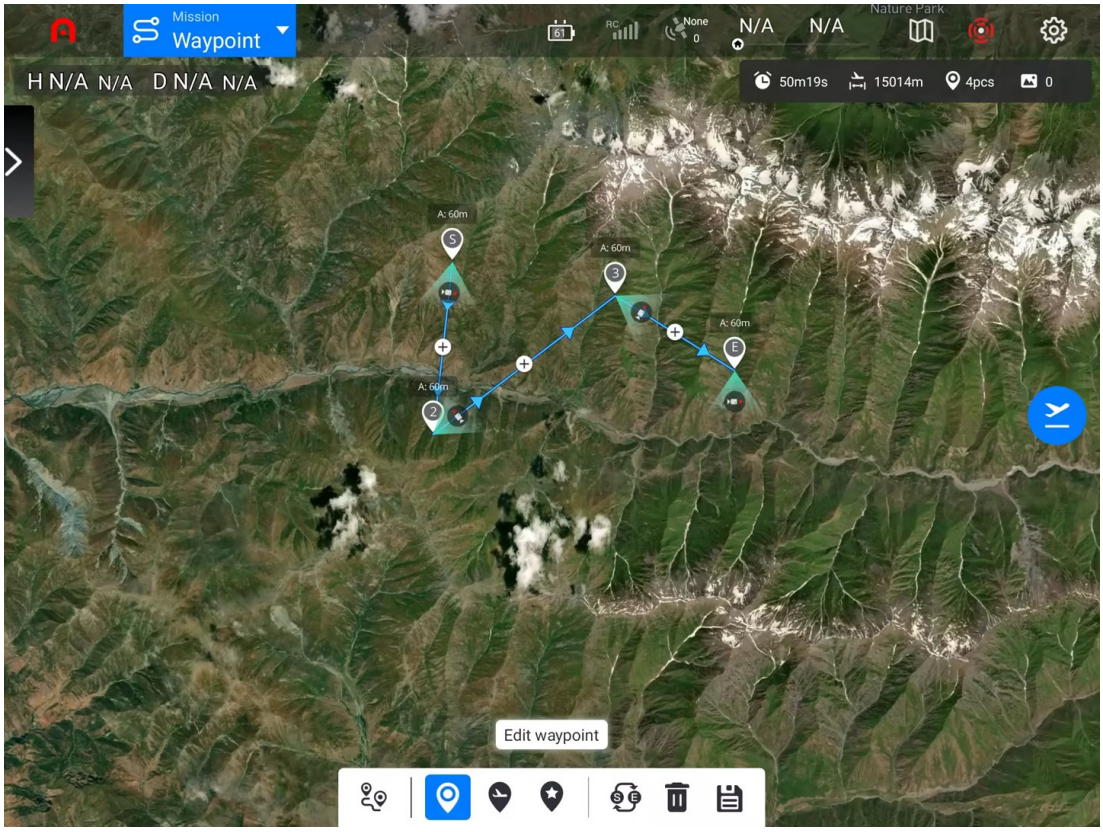

Fig 6-8 Waypoint Mission Page

Tips
● After completing the mission editing, tap the "" icon on the right side of the page to perform a pre-flight check. After confirming that it is normal, you can perform the automatic flight mission. ● After tapping the "" icon on the lower side of the editing page to save the task, you can view the saved task on the task scene selection page.

■ Waypoint Mission

The user adds the navigation point by himself, sets the parameters and actions of the aircraft at each point, and the point will be connected in order. After calling and execution, the aircraft will fly automatically according to the route and perform the corresponding action at each point.

■ Rectangular Mission

Generate the rectangular flight area. When closing the double grid, it is suitable for orthographic image data acquisition. When opening the double grid, it is suitable for 3D modeling.

■ Polygon Mission

Generate the irregular polygon flight area. When closing the double grid, it is suitable for the orthographic image data acquisition. When opening the double grid, it is suitable for 3D modeling.

■ Oblique

The generated route consists of one normal route and four inclined routes, which is suitable for accurate 3D modeling.

Chapter 7 Firmware Updates and Maintenance

In order to optimize aircraft performance, Autel Robotics will update relevant firmware when necessary. You can download a unified firmware upgrade package from the official website, which contains the latest versions of various firmwares such as flight control, gimbal, camera, smart battery, remote control, and etc.
Using Autel Explorer App can also upgrade the firmware of aircraft, remote controllers, smart batteries, and etc.

Important

- Online upgrade requires ensuring that the remote control can normally access the Internet.

7.1 Aircraft and Remote Controller Firmware Updates

Before performing a firmware update, please make sure:
1. The aircraft motors are not rotating.
2. The batteries power of both the aircraft and the remote controller are not less than 25%.
3. The SD card has enough space to store firmware files.

■ Method 1

1. Download the firmware upgrade package from the official website of Autel Robotics.
2. Insert the SD card into your computer and extract the downloaded files to the root directory of the SD card. Then remove the SD card from the computer.
3. Turn on the remote controller and aircraft.
4. Insert the SD card into the aircraft and the upgrade process will start automatically. You can check the upgrade progress through the APP.
5. Restart the remote controller and aircraft after upgrading.

■ Method 2

When the system detects a new firmware version, the Autel Explorer App will automatically pop up a prompt box after connecting to the aircraft to remind you to download and install it. Please follow the prompts to download and upgrade.

Important

- The update takes approximately 15 minutes. During the update process, do not turn off the aircraft or remote controller, start the motors, or remove the SD card from the aircraft.
- After upgrading, the remote controller may disconnect from the aircraft. If you need to pair them again, please refer to "4.9 Frequency Pairing With the Remote Controller" in Chapter 4.
- Please update firmware through Autel Explorer Application or download latest firmware from the official website: www.autelrobotics.com. Firmware update package from third parties may pose security risks.

7.2 Aircraft parts maintenance

To ensure that the aircraft maintains optimal performance, all parts of the aircraft need to be maintained regularly. For details, please refer to the Maintenance Manual. If you have any questions, please contact Autel Robotics.

Table 7-1 Aircraft consumable parts list

No.	Part	Quantity	Note
1	Propeller CW	2	Equipped with 2 propeller CW or propeller CCW.
2	Propeller CCW	2	
3	Power motor	4	
4	Front arm tripod	2	
5	Rear arm tripod	2	
6	Gimbal shock absorbing ball	4	
7	Smart battery unlock button	2	
8	Air inlet dust screen	1	
9	Air outlet dust screen	1	
10	Remote control joystick	2	
11	remote control antenna	2	

Table 7-2 User-replaceable Parts List

NO.	Part	Quantity	Part Number	Manufacturer information
1	Propeller CW	2	EAN: 6924991101475 UPC: 889520011211	Autel Robotics
2	Propeller CCW	2		
3	Pro gimbal	1		Autel Robotics
4	Dual 640T gimbal	1		Autel Robotics
5	smart battery	1	EAN: 6924991130659 UPC: 889520210652	Autel Robotics
6	RTK module	1	EAN: 6924991102335	Autel Robotics

UPC: 889520012072

Tips

- Users can contact Autel Robotics to purchase the above parts and replace them by themselves according to the operating instructions.
- If you need to replace parts that are not in the list, please contact Autel Robotics. Damage caused by unauthorized disassembly and assembly will not be covered by the warranty.
- Please refer to the "Maintenance Manual" for the service life cycle of each component.

7.3 Troubleshooting Guide

Tips

- The following troubleshooting measures are limited to failure factors caused by use under normal limited conditions.
- For faults caused by abnormal use, please contact Autel Robotics directly for processing.

1. If the aircraft displays a fault during self-check (the tail LED indicator will turn solid red):
- For hardware problems, please contact Autel Robotics customer support.

2. If the motor fails to start, please check the following issues:
- Whether the remote controller and aircraft are paired.
- Is the remote control calibrated correctly?
- Whether the aircraft battery is fully charged.
- Is the compass calibrated correctly?
- Whether GPS is available (when novice mode is activated).

3. If the motor cannot take off after starting, please check the following issues:
- Whether the aircraft is in a no-fly zone.
- Whether the aircraft is on a flat surface.

4. Reduced flight time:
- The most common reasons for shortened flight time are the effects of low ambient temperature, wind strength, etc.

5. If the aircraft does not respond to the remote control during the pairing process:
- Make sure there are no metal objects, mobile devices, or other remote controls nearby.

6. If the video link fails or is frequently disconnected:
- Make sure there are no magnets or sources of signal interference around the aircraft and remote controller.

7. The camera automatically turns off during recording:

- Do not remove the Micro SD card from the camera. Restart the camera and wait until the video files are restored as completely as possible.

8. The video link is disconnected when the aircraft is not within sight:
- Start the automatic return command to return the aircraft to the home point.

9. What do you need to pay attention to when using the omnidirectional binocular vision sensing system?
- Before flying, make sure that 12 visual sensors are clean and free of any obstructions. Omnidirectional refers to six directions, including forward, backward, left, right, up, and down.
- There is a 30° blind zone in the four diagonal directions of the aircraft. Please pay attention to the surrounding environment and the safety tips of the App.
- Obstacle detection is achieved by detecting the surface texture of obstacles. The detection function will not work properly when encountering no texture, repeated texture, solid color surfaces, moving objects, tiny objects, etc.

10. If the precision landing function does not work properly:
- The precise landing function is achieved through the binocular camera below to detect the texture of the ground when the aircraft takes off.
- If the ground has no texture, or the camera underneath is damaged, this feature will not work properly.

11. If the omnidirectional binocular vision sensing system does not work properly:
- Restart the aircraft and check again to see if it works properly.

12. If the video is tilted during flight:
- Place the aircraft horizontally and keep it stationary.
- Calibrate the gimbal according to the "PTZ Calibration" function in the App.
- If the problem persists, adjust the gimbal according to the instructions in the "Gimbal Fine Adjustment" function.

13. If the lens of the binocular camera is dirty:
- Please use a glasses cloth to gently wipe the lens. It is recommended to use the glasses cloth provided in the box.

14. When visual errors occur during flight:
- Please use the PC calibration tool to calibrate the binocular parameters. The PC calibration tool can be downloaded from the official website.

15. How to reset the controller to factory default settings:
- Tap the “MaxTools” app on the main interface of the controller, and then tap Factory Reset to reset the controller to factory default settings. Please back up important data before performing this operation.

16. When the aircraft or the controller experiences unexpected shutdown during firmware updates, restart the device:

- If it can power on normally, make sure that the device is sufficiently charged before proceeding with the update;
- If the device cannot power on, contact Autel Robotics.

17. For the purpose of device safety, please do not use unknown USB device or other external devices.

Appendix A Product Specifications

A.1 Aircraft

Aircraft	
Weight (With propellers, battery)	EVO II Pro RTK V3: 1237 g EVO II Dual 640T RTK V3: 1250 g
Maximum takeoff weight	EVO II Pro RTK V3: 1270 g EVO II Dual 640T RTK V3: 1270 g
Dimensions	Folded: 230×130×143mm Unfolded: 457×558×143mm
Max. rotation speed	9000 rpm
Wheelbase	397 mm
Maximum ascent speed	Novice mode:3 m/s Standard: 5m/s Ludicrous: 8 m/s
Maximum descent speed	Novice mode: 3 m/s Standard: 3 m/s Ludicrous: 4 m/s
Maximum horizontal flight speed (no wind near sea level)	Novice mode: 3 m/s Standard: 10 m/s Ludicrous: 20 m/s
Maximum Service Ceiling Above Sea Level	5000 meters
Maximum flight altitude	800 meters (Altitude limit in the App)
Maximum flight time (no wind)	38 minutes
Maximum hover time (no wind)	32 minutes
Maximum wind resistance level (takeoff and landing phase)	Fresh Breeze
Maximum tilt angle	Novice mode: 15° Standard: 30° Ludicrous: 33°
Maximum rotation angular speed	120°/s

Working temperature	-10~40℃
Battery hot replacement	not support
Internal storage	Onboard storage: 8GB
GNSS	GPS/Galileo/BeiDou/GLONASS
Hover accuracy	Vertically: ±0.1 meters (when visual positioning is working normally) ±0.5 meters (when GNSS is working normally) Horizontally: ±0. 3 meters (when visual positioning is working normally) ± 1.5 meters (when GNSS is working normally)
Image Transmission	
Operating Frequency	**900M:** 902 – 928 MHz* **2.4G:** 2.400 – 2.476GHz**, 2.400 – 2.4835 GHz **5.7G:** 5.65 - 5.755GHz*** **5.8G:** 5.725 - 5.829GHz**, 5.725 - 5.850 GHz * Only applicable to FCC regions. **Only applicable to SRRC regions. ***Only applicable to MIC regions. Note: Some frequencies are only available in some regions or for indoor use only. Check local laws and regulations for details.
Maximum signal effective distance (No interference, no obstruction)	FCC: 15 kilometers CE: 8 kilometers
Effective transmitter power (EIRP)	**900M:** ≤30dBm (FCC) **2.4G:** ≤30dBm (FCC), ≤20dBm (CE/SRRC), ≤12.14dBm (MIC) **5.7G:** ≤30dBm (MIC) **5.8G:** ≤30dBm (FCC/SRRC); ≤14dBm (CE)
Visual Sensing System	
Sensing range	Forward: 0.5~18 meters Backward: 0.5~16 meters Left and right: 0.5~10 meters Upward: 0.5~10 meters Downward: 0.5~10 meters

FOV	Forward and backward: 60° horizontally, 80° vertically Upward: 65° horizontally, 50° vertically Left and right: 65° horizontally, 50° vertically Downward: 100° horizontally, 80° vertically
Effective use of the environment	Front, rear, left and right: The surface has rich texture and sufficient lighting conditions (>15 lux, normal indoor fluorescent lighting environment) Above: The surface is a diffuse reflection material and the reflectivity is >20% (such as walls, trees, people, etc.) Below: The ground is richly textured and the lighting conditions are sufficient (>15 lux, normal indoor fluorescent lighting environment) The surface is made of diffuse reflective material and the reflectivity is >20% (such as walls, trees, people, etc.)
Accessories	
RTK module	Dimensions：55.5×72.5×57 mm Weight：59.5 g Connections：Floating Connectors Power：~ 3W RTK Positioning Precision： 1.5 cm + 1 ppm（(Vertical） 1 cm + 1 ppm（Horizontal）

A.2 Gimbal Camera

A.2.1 EVO II Pro RTK V3 Camera

Visual camera	
Image sensor	1 inch CMOS, 20 million pixels
Lens	Field of view: 82° 35 mm format equivalent focal length: 29 mm Aperture: f/2.8-f/11 Focus distance: 0.5 meter ~ ∞
ISO range	Video: ISO100 ~ ISO6400 Photo: ISO100 ~ ISO6400

	Night scene mode: Maximum video ISO44000
Shutter speed	Photo mode: 1/8000 ~ 8 seconds Others: 1/8000 ~ 1/frame rate second
Zoom	1 - 16x digital zoom (maximum 3x lossless zoom)
Maximum photo size	5472×3648 (3:2) 5472×3076 (16:9) 3840×2160 (16:9)
Photo format	JPG (default) /12bits DNG / JPG+12bits DNG
Photo shooting mode	Single shooting (default)/Brust shooting/AEB continuous shooting/time lapse/HDR shooting
Video resolution	5472×3076 P30/P25/P24 3840×2160 P60/P50/P48/P30/P25/P24 2720×1528 P60/P50/P48/P30/P25/P24 1920×1080 P120/P60/P50/P48/P30/P25/P24
Video format	MP4 / MOV (MPEG-4 AVC/H.264, HEVC/H.265)
Video maximum bit rate	120Mbps
Support file system	FAT32/exFAT
Gimbal	
Mechanical scope	Pitch: -135° to +45° Heading: -100° to +100°
Controllable rotation range	Pitch: -90° to +30° Heading: -90° to +90°
Stable system	Three-axis stabilization
Maximum control speed (pitch)	300°/s
Angualr vibration range	0.005°

A.2.2 EVO II Dual 640T RTK Camera

Visual camera	
Image sensor	1/1.28 inch CMOS, 50 million pixels
Lens	Field of view: 85° 35 mm format equivalent focal length: 23 mm

	Aperture: f/1.9 Focus distance: 0.5 meter ~ ∞
ISO range	Video: ISO100 ~ ISO6400 Photo: ISO100 ~ ISO6400 Night scene mode: Maximum video ISO64000
Shutter speed	Photo mode: 1/8000 ~ 8 seconds Others: 1/8000 ~ 1/frame rate second
Zoom	1 - 16x digital zoom (maximum 4x lossless zoom)
Maximum photo size	8192×6144（4:3） 4096×3072（4:3） 3840×2160（16:9）
Photo format	JPG (default) /12bits DNG / JPG+12bits DNG
Photo shooting mode	Single shooting (default)/Brust shooting/AEB continuous shooting/time lapse/HDR shooting
Video resolution	3840×2160 P60/P50/P48/P30(Default)/P25/P24 2720×1528 P60/P50/P48/P30/P25/P24 1920×1080 P120/P60/P50/P48/P30/P25/P24
Video format	MP4 / MOV (MPEG-4 AVC/H.264, HEVC/H.265)
Video maximum bit rate	60Mbps
Support file system	FAT32/exFAT
Thermal camera	
Sensor	Uncooled VOx Microbolometer
Lens	FOV H33°V26° Focal length 13mm
Zoom	1-16x
Pixel size	12μm
Wavelength range	8 - 14μm
Temperature range	High gain mode: -20° to +150° Low gain mode: 0° to +550°
Temperature measurement accuracy	±3℃ or ±3% of reading (whichever is greater) @Environmental temperature-20℃~60℃

Accurate temperature measurement distance	2-20 meters
Video resolution	640x512@25fps
Video format	MOV / MP4 (Support H.264/H.265)
Camera resolution	Infrared mode: 640*512 Picture-in-picture mode: 1920*1080, 1280*720
Photo mode	Single shot Burst shooting: 3/5 frames, 3 is the default Time Lapse: JPG: 2s/5s/7s/10s/20s/30s/60s
Photo format	JPG (with irg file)
Gimbal	
Mechanical scope	Pitch: -135° to +45° Heading: -100° to +100°
Controllable rotation range	Pitch: -90° to +30° Heading: -90° to +90°
Stable system	Three-axis stabilization
Maximum control speed (pitch)	300°/s
Angualr vibration range	0.005°

A.3 Remote controller

Autel Smart Controller V3	
Material	PC+ABS
Dimensions	269×189×66 mm (antennas folded) 269×302×87 mm (antennas unfolded)
Weight	1194 g (protective case excluded) 1365 g (protective case included)
Operating Temperature	-20℃ to 40℃
Storage Temperature	+15℃ ~ +25℃ (within a year) 0℃ ~ +30℃ (within three months) -20℃ ~ +45℃ (within a month)
Protection Rating	IP43

Internal Storage	128GB
microSD Extension	Not supported
Operating System	Based on Android 11
Application Installation	Supports the installation of third-party Android apps
Video Performance	4K@24FPS H.264/H.265 video smooth play
HDMI	Outputs up to 1080P@60FPS video
USB-C	Charging: supports PD/QC fast charging, up to 65W Data: USB3.1 Gen2
USB-A	Charging: 5V/2A Data: USB2.0
GNSS	GPS+Galileo+BeiDou+GLONASS
Wi-Fi Protocol	802.11a/b/g/n/ac Supports 2×2 MIMO Wi-Fi
Wi-Fi Operating Frequency	**2.4G:** 2.400 – 2.476GHz*, 2.400 – 2.4835 GHz **5.1G:** 5.15 - 5.25 GHz** **5.8G:** 5.725 - 5.829GHz*, 5.725 - 5.850 GHz * Only applicable to SRRC regions. ** Only applicable to MIC regions. Note: Some frequencies are only available in some regions or for indoor use only. Check local laws and regulations for details.
Wi-Fi Effective Isotropic Radiated Power (EIRP)	**2.4G:** ≤30dBm (FCC), ≤20dBm (CE/SRRC) **5.1G:** ≤10mW (MIC) **5.8G:** ≤30dBm (SRRC/FCC), ≤14dBm (CE)
Bluetooth	Bluetooth 5.0
Bluetooth Operating Frequency	2.400 - 2.4835 GHz Note: Some regions have designated frequency ranges. Check local laws and regulations for details.
Bluetooth Effective Isotropic Radiated Power (EIRP)	≤20dBm (SRRC/CE), ≤21dBm (CE)
Image Transmission	
Antenna	Dual antennas, 1T2R, detachable design

Operating Frequency	**900M:** 902 – 928 MHz* **2.4G:** 2.400 – 2.476GHz**, 2.400 – 2.4835 GHz **5.7G:** 5.65 - 5.755 GHz*** **5.8G:** 5.725 - 5.829GHz**, 5.725 - 5.850 GHz * Only applicable to FCC regions. **Only applicable to SRRC regions. *** Only applicable to MIC regions. Note: Some frequencies are only available in some regions or for indoor use only. Check local laws and regulations for details.
Effective Isotropic Radiated Power (EIRP)	**900M:** ≤30dBm (FCC) **2.4G:** ≤30dBm (FCC), ≤20dBm (CE/SRRC), ≤12.14dBm (MIC) **5.7G:** ≤30dBm (MIC) **5.8G:** ≤30dBm (SRRC/FCC), ≤14dBm (CE)
Maximum Transmission Distance (Without Interference and Blocking)	FCC: 15 km CE/SRRC: 8 km
Display	
Type	TFT LCD
Dimensions	7.9 inches
Maximum Brightness	2000 nits
Resolution	2048×1536
Refresh Rate	60Hz
Touch Control	Supports 10-point touch
Battery	
Battery Type	Li-Po 3S
Rated Capacity	5800 mAh
Voltage	11.55V
Battery Energy	67 Wh
Charging Time	About 120 minutes

Battery Endurance	2.5 hours (Max brightness) 4.0 hours (50% brightness)
Battery Replacement	Not supported

A.4 Smart battery

Smart Battery XE3_7100_1155	
Operating Temperature	0~+45℃
Battery Type	LiPo 3S
Rated Capacity	7100 mAh
Battery energy	82 Wh
Voltage	11.55 V
Charging Voltage Limit	13.2V
Rated Charging Power	66W
Maximum charging power	93W
Weight	365g
Battery charging temperature	+5-+45℃ (When the battery temperature is below 5℃, the battery stops charging. When the battery temperature is above +45℃, the battery stops charging.)
Battery Storage	
Ideal storage environment	+ 22℃ ~ +28℃
Storage temperature and humidity	- 10℃ ~ +30℃, 65 ± 20%RH
Battery Single Charger	
power input	100-240V ~ 50/60 Hz, 1.5 A
Output port	Battery charging interface/USB-A
Battery charging interface	13.2V~5A
USB charging port	5V~3A, 9V~2A, 12V~1.5A
Rated power	66W Max

Appendix B Declaration of Conformity (DOC)

Declaration of Conformity

Product:	EVO II Pro RTK V3, EVO II Dual 640T RTK V3
Model Number:	MDCV3
Manufacturer's Name:	*Autel Robotics Co., Ltd.*
Manufacturer's Address:	*601,701,801,901, Block B1, Nanshan iPark, No. 1001 Xueyuan Avenue, Nanshan District, Shenzhen, Guangdong, 518055, China*

We, *Autel Robotics Co., Ltd.*, declare under our sole responsibility that the above referenced product is in conformity with the applicable requirements of the following directives:

RED Directive:	2014/53/EU
RoHS Recast Directive:	2011/65/EU
UAS Delegated Regulation:	2019/945/EU 2020/1058/EU
Machinery Directive:	Annex I 2006/42/CE

Conformity with these directives has been assessed for this product by demonstrating compliance to the following harmonized standards and/or regulations:

Safety	EN IEC 62368-1:2020+A11:2020
EMC	ETSI EN 301 489-1 V2.2.3 (2019-11) ETSI EN 301 489-3 V2.1.1 (2019-03) ETSI EN 301 489-17 V3.2.4 (2020-09) ETSI EN 301 489-19 V2.1.1 (2019-04) EN 55032:2015+A11:2020 EN 55035:2017+A11:2020 EN IEC 61000-3-2:2019 EN 61000-3-3:2013+A1:2019
Radio	ETSI EN 300 328 V2.2.2 (2019-07) ETSI EN 300 440 V2.2.1 (2018-07) ETSI EN 303 413 V1.1.1 (2017-06)
Health	EN IEC 62311:2020
RoHS	2011/65/EU
UAS Delegated Regulation	prEN 4709-001: 03.2023 with D5 WG8 prEN 4709-002: 02.2023 with Edition P 1, February 2023 prEN 4709-003: 02.2023 with Edition P 1, February 2023 prEN 4709-004: 02.2023 with Edition P 1, February 2023
Machinery Directive	EN ISO 12100

The notified body, *XXX*, notified body number: XXXX, performed the EU-type examination in according with Annex III, Module B of Council Directive 2014/53/EU, and issued the EU-type examination certificate: XXX.

The notified body, *LGAI Technological Center S.A./Applus*, notified body number: 0370, performed the EU-type examination in according with Annex III, Module B of Regulation (EU) 945/2019, and issued the EU-type examination certificate: XXX.

Signed for and on behalf of: *Autel Robotics Co., Ltd.*
Place: Shenzhen, China Date: 2024-01-13
Name: Cheng Zhuanpeng Position: Legal Representative

Signature: Cheng Zhuanpeng

Appendix I

Product Mix. Description	Model	SW version	Description	Serial Number
EVO II Pro RTK V3	MDCV3		Quadcopter equipped with a 6K camera and an RTK module which has centimeter-level positioning accuracy.	1748FEV3HMA923XXXXXX
EVO II DUAL 640T RTK V3	MDCV3		Quadcopter equipped with a 4K camera, a thermal camera and an RTK module which has centimeter-level positioning accuracy.	1748CBE46232515XX
Battery	XE3_7100_1155	/	Drone Battery	TH79232XXXXXX
Remote Controller	EF9-3		Drone Remote Controller	
Adapter	XA3_1320	/	Drone Adapter	/
RTK Module	RTK1	/	Supports NTRIP and is capable of centimeter-level positioning accuracy.	

*Note: Updated software will be released by manufacturer to fix bugs and improve the performance after the product placed on the market. All updated versions released by the manufacturer have been verified to be complied with the applicable regulations. All RF parameters (e.g., RF power, frequency) are not accessible to end users and cannot be changed by any third parties. Conformity of the product with EU requirements is ensured by evaluating the GNSS signals. The radio parameters are automatically set according to the detected region, the user does not have the capability to change these settings.

The guaranteed sound power level for this UAS equipment is 83 dB(A).
The object of the declaration described above is of class 2.

To download DoC, please visit: https://www.autelrobotics.com/doc/161/.

Appendix C Drone Pilot Information Notices

When flying this aircraft product in the territory of EU Member States, please comply with the following EASA regulations.

EASA
European Union Aviation Safety Agency

2
LOW SPEED MODE

This drone is an aircraft. Aviation law applies.

As a drone pilot, you are responsible for flying your drone safely.

Before flying, as a drone pilot, you must

- make sure the drone owner is registered at his or her national authority (unless already registered)
- make sure the owner registration number is displayed on the drone and uploaded onto the remote identification system
- read and follow the manufacturer's instructions
- complete the mandatory online training and pass the test
- complete a self-practical training, and pass a theoretical test at an entity designated by your national authority

Check how to register, train and where you are allowed to fly:

www.easa.europa.eu/drones/NAA

Offences are punishable by law.

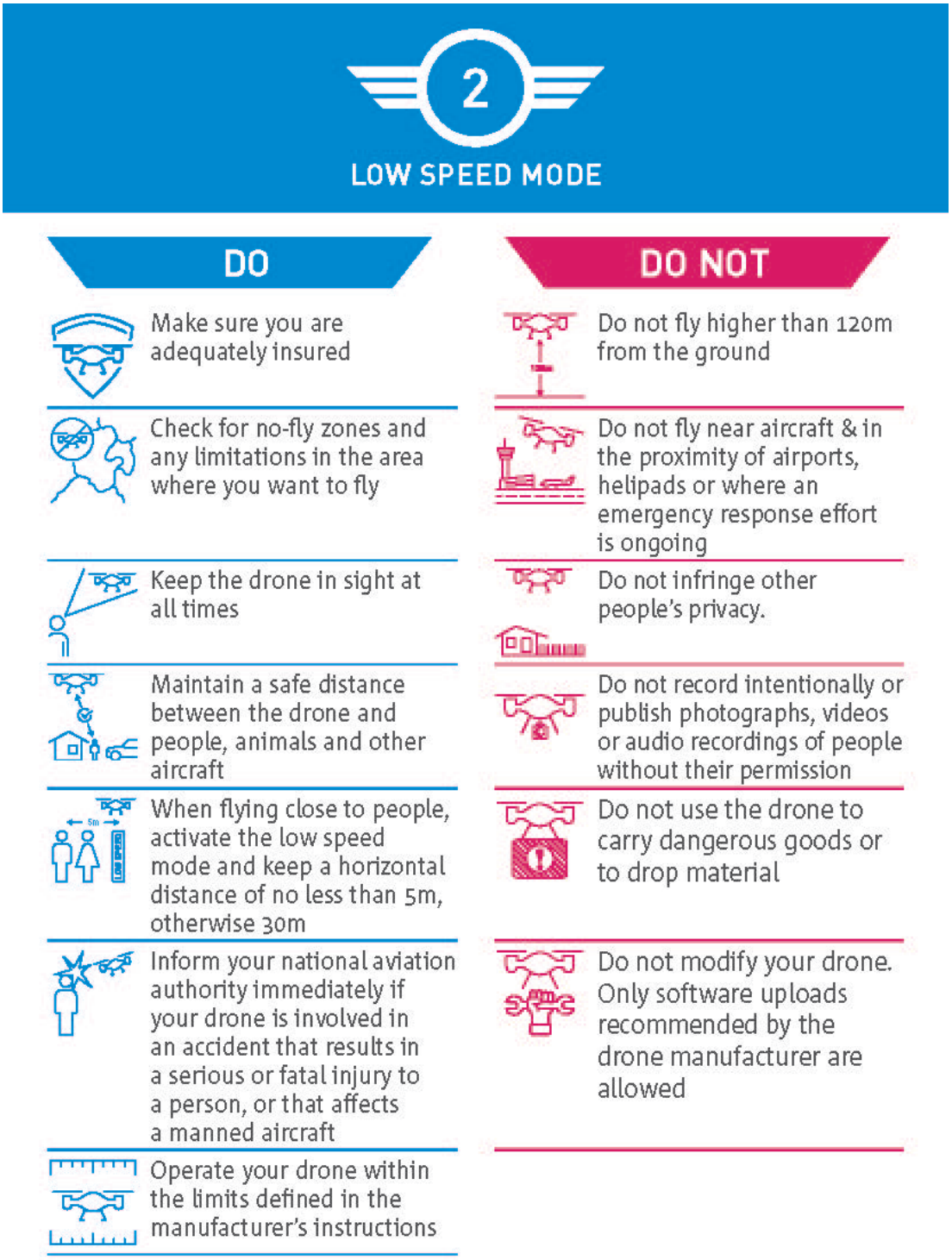

You can visit the EASA official website to get other language versions:

https://www.easa.europa.eu/en/document-library/general-publications/drones-information-notices.