ANAFI USA

FreeFlight 6 USA User Guide

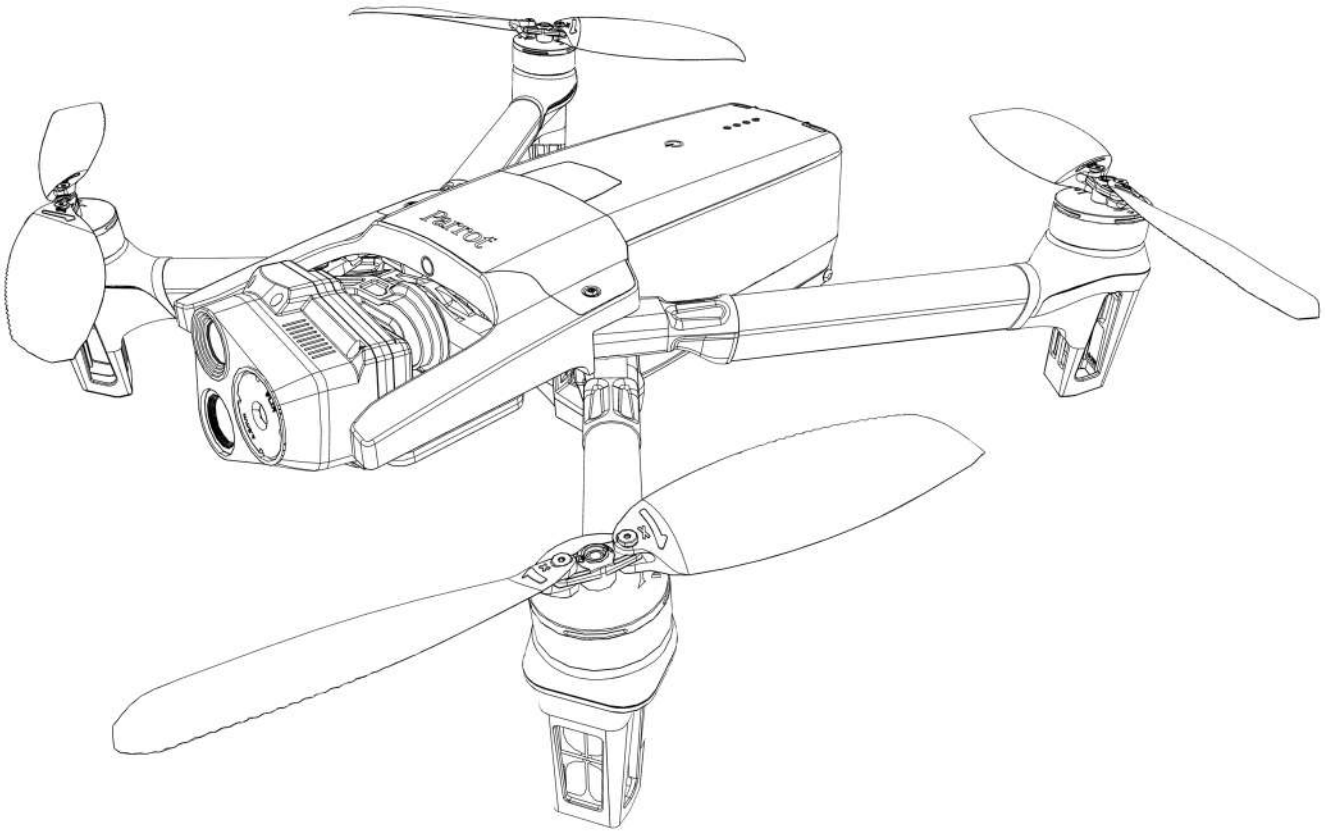

Version: 6.10.6.0

Updated: January 07, 2026

Parrot®

Documentation changelog

This section details the major changes to Parrot's technical documentation since the previous update.

What changed?	Where?
Ecosystem versions subchapter updated.	Page 2
Returning home: Smart RTH chapter updated.	Page 39
Flight plan subchapter updated.	Page 76

Ecosystem versions

This section details the software versions for the full ecosystem available at the time of the most recent update to this user guide.

Ecosystem element	Software version
Application	6.10.6 (Android) 6.10.2 (iOS)
Drone	1.10.7
Controller	7.7.2

Using this guide

Parrot recommends that you read the following user guide thoroughly before your first flight. This user guide completes the documentation of ANAFI USA, which also includes the:

- ANAFI USA Flight safety guide;
- ANAFI USA and FreeFlight 6 USA Release Notes;
- ANAFI USA Video Tutorials

Read the Flight Safety Guide provided with ANAFI USA to have complementary information about safety, operational limitations for use and maintenance of the drone. Always verify that you are using the latest version of the User Guide.

This guide is specific to two drone configurations:

- ANAFI USA coupled with the Skycontroller 3, or
- ANAFI USA coupled with the Skycontroller 4
- FreeFlight 6 USA flight application.

NOTE: ANAFI USA requires the FreeFlight 6 USA app to fly, and to make sure that your drone and controller are fully up to date with the latest features.

- **Read entirely at least once**. It answers most questions that most users encounter when they use ANAFI USA.
- **Keep it for reference and stay alert for updates**. Updates are advertised on all Parrot websites and social media. These updates are mandatory and must be systematically performed prior to any flight to ensure maximum performance and safety.
- **The *Table of contents* on page 4 is active**. Click a title to access the corresponding section. Alternatively, if you read the user guide on an internet browser, use the side bar navigation menu on the left hand side of the screen. The side bar navigation menu is also available on the Adobe Acrobat PDF viewer - Tap the **three-dot** icon at the top-right of the screen, then tap **Pages** > **Contents**. The side bar navigation menu opens.
- **This online user guide has no index**. Use the keyboard shortcut **Ctrl + F** (Windows) or **Command + F** (Mac) to browse all occurrences of any keyword (flight, preferences, gimbal, Android, iOS, Flir, Boson®, photo, EV, ISO, and so on).

IMPORTANT: Parrot strongly recommends that you regularly refer to the Release Notes available on the Parrot website, to ensure that you have the latest versions of the ANAFI USA and Skycontroller 4 firmware, and the FreeFlight 6 USA App. If you are an offline user, you must contact your local Parrot Partner or Parrot Contact to obtain the .apk file to perform an offline system update. Refer to *FreeFlight 6 USA offline update via .APK file* on page 32 for more information.

© 2026 Parrot Drones SAS. All Rights Reserved.

Table of contents

Documentation changelog **2**

Ecosystem versions 2

Using this guide **3**

Table of contents **4**

Preflight checklist **6**

Transport & handling 6

Equipment 6

Regulations 6

Flight conditions 6

Getting started **7**

Foreword **10**

ANAFI USA ecosystem 10

Wi-Fi 10

GPS 10

4K video formats 11

ANAFI USA smart batteries 11

HDMI 11

User guide screenshots 11

Technical support 11

Information related to Privacy Rights 11

Disclaimer **12**

Technical specifications **14**

Pack contents **16**

ANAFI USA **17**

Smart LiPo battery **19**

Battery removal 19

Battery installation 19

Battery charging 19

Battery care and safety 20

Battery state of health 21

Battery update 21

Installing a microSD card 22

Compatible microSD cards 22

Skycontroller 3 ..... **23**

LED status indicator color codes 24

Pairing ANAFI USA to a Skycontroller 3 25

Skycontroller 4 ..... **26**

LED status indicator color codes 28

Pairing ANAFI USA to a Skycontroller 4 28

HDMI video sharing 28

FreeFlight 6 USA **30**

Presentation of the HUD 30

FreeFlight 6 USA offline update via .APK file **32**

Taking off **33**

Ground take-off 33

Hand launch 33

Deployment from a moving vehicle 34

Flying **36**

Optimal speeds 36

Optimal autonomy (flight time) 36

Optimal elongation (distance) 37

Wi-Fi link optimization **38**

Returning home: Smart RTH **39**

Precise Home Setting 39

Low battery Smart RTH 39

Managing coordinates 39

Advanced RTH settings 41

Pilot RTH 41

Custom RTH 41

Landing **44**

Hand landing 44

Recovery from a moving vehicle 45

Preferences 46
Controls 46
Presets 46
Thermal 47
Interface 47
Safety 48
Camera 49
Network 49
Videos, photos, and panoramas 51
Video mode 51
Photo mode 52
Gimbal tilt control 56
Zoom control 56
Camera Calibration 56
Advanced image settings 59
Lock AE 59
HDR 60
Shutter speed (s) 60
ISO value (ISO) 61
White balance (WB) 61
Exposure value (EV) 63
STYLE 63
ADJUSTMENT 63
Media management 65
Retrieving photos and videos 65
Direct media retrieval (drone to computer) 65
FreeFlight 6 USA Gallery 65
Thermal imaging 68
Presentation of the Thermal HUD 68
Relative Thermal mode 69
Spot Thermal mode 69
Thermal analyzer mode 70
Cineshots 71
360° 71
Reveal 71
Spiral 71
Epic 72
Piloting modes 73
Manual flight 73
Cameraman 73
Follow Me 74
SmartDronies 75
FPV 76
Flight Plan 76
Touch & Fly 79
How to prepare your map 81
Save future maps online for offline use 81
Import custom maps to FreeFlight 6 USA 81
Maintenance and troubleshooting 85
Changing propeller blades 85
Rebooting all systems 86
Reinstalling FreeFlight 6 USA 86
ANAFI USA drone hard reset 86
Skycontroller 4 hard reset 86
ANAFI USA's smart battery hard reset 87
Recover ANAFI USA 87
Drone end of service life 87
Frequently asked questions 88
Appendix: Operational checklist 90

© 2026 Parrot Drones SAS. All Rights Reserved.

Preflight checklist

Transport & handling

- Always transport ANAFI USA in its hard case, with the gimbal's protective cover on.
- Always transport the Skycontroller 4 safely in the relevant location in the hard case.
- Protect the battery from temperature extremes, both low and high. Try to keep the battery as close as possible to ambient temperatures.
- Always handle the ANAFI USA with care. Do not apply pressure to the drone and generally avoid touching the sensitive camera and gimbal.
- Always keep the hard case with the drone and battery in dry places.

Equipment

- Ensure that you download the latest version of FreeFlight 6 USA, and that both your Skycontroller 4 and your ANAFI USA are up to date with the latest versions of firmware.

IMPORTANT: Updates are mandatory and must be performed systematically prior to any flight to ensure maximum performance and safety.

- Ensure that you use the correct USB cable to connect your Skycontroller 4 and your device.
- Ensure that you insert a microSD card with enough free memory space into the drone.
- Ensure that you unfold all four foldable arms of ANAFI USA.
- Ensure that the propellers are clean, intact, and unobstructed.
- Ensure that both ANAFI USA's and Skycontroller 4's batteries are fully charged.
- Ensure that you always use genuine Parrot smart batteries. Non-genuine batteries are forbidden, and their use voids the warranty and impacts safety requirements.
- Ensure that the ANAFI USA's battery is securely installed on the drone's body.
- Ensure that the ANAFI USA's gimbal protective cover is removed.
- Ensure that ANAFI USA's lenses are clean. If the lenses require cleaning, clean them before you press ⏻ **Power** on the drone. Hold the gimbal between two fingers so that you do not apply pressure to the mechanism. Gently wipe the lenses with a microfiber cloth.

Regulations

- Ensure that drone use is permitted where you intend to fly.
- Check for potential restrictions regarding the use of radio frequencies in the area where you intend to fly.

Flight conditions

- Ensure that the flying zone is safe and clear.
- Do not fly ANAFI USA over unauthorized airspaces such as airports, train stations, power plants, national reserves, etc.
- Check the weather. Do not fly ANAFI USA in fog, or in wind exceeding 14.7 m/s (32.8 MPH).
- Due to the operating mode of its vertical camera and ultrasonic sensor, Parrot recommends you do not fly ANAFI USA lower than 10 m (30 ft) over water, or other reflective surfaces, such as mirrors, glass, etc.

⚠ **WARNING:** Do not fly ANAFI USA at night unless special authorization has been granted. Always deploy ANAFI USA responsibly.

Getting started

Refer to the enclosed Quick Start Guide for illustrated guidance to get started.

1. Connect ANAFI USA's smart battery to the enclosed charger with one of the enclosed USB-A to USB-C cables.

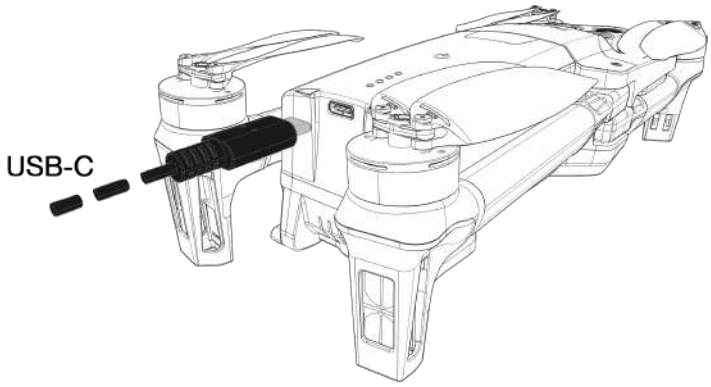

The battery's LEDs start to flash indicating that the battery is awake.

> **IMPORTANT:** Always fully charge all batteries before flying. Refer to *Smart LiPo battery* on page 19 for more information.

2. Connect the Skycontroller to the enclosed USB-PD charger with one of the enclosed USB-A to USB-C cables.

Skycontroller 4 USB-C charging port

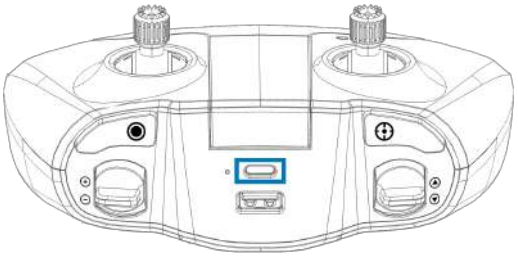

Skycontroller 3 USB-C charging port

3. Wait for the drone and controller batteries to fully charge.
4. Scan one of the following QR codes, depending on your operating system, to download the latest version of FreeFlight 6 USA to your device.

Android FreeFlight 6 USA QR code

iOS FreeFlight 6 USA QR code

© 2026 Parrot Drones SAS. All Rights Reserved.

The fully secure piloting software of ANAFI USA, FreeFlight 6 USA, guarantees the integrity of data exchanges for the full ecosystem, and manages updates (piloting software, drone, remote control).

5. Insert your device into the Skycontroller.
6. Connect your device to Skycontroller 4 with a USB-C cable.

   If you use Skycontroller 3, connect your device with a USB-A cable.

> **NOTE:** Use your device and Skycontroller 4 for the best flight experience. However, you can use your device alone to fly ANAFI USA. If you use your device without a Skycontroller, connect your device to ANAFI USA's Wi-Fi network. Refer to the **WIFI SETTINGS** sticker located inside the drone's carry case - SSID format: AnafiUSA-X######.

7. Press and hold Skycontroller 4's ⏻ **Power** button for approximately 2 seconds to power it on.

   If you use Skycontroller 3, the controller powers on in step 5, when you unfold the controller's central arm to insert your device.

The main LED turns light blue. Refer to *Skycontroller 4* on page 26 for more information.

A prompt appears on your screen, which invites you to allow communication between your device and the controller.

8. Tap **Allow** to run FreeFlight 6 USA

> **NOTE:** If the prompt does not appear on your screen when you connect your device to your Skycontroller, tap the app logo on your device's screen to launch FreeFlight 6 USA manually. Refer to *FreeFlight 6 USA* on page 30 for more information.

Your device displays FreeFlight 6 USA's homepage.

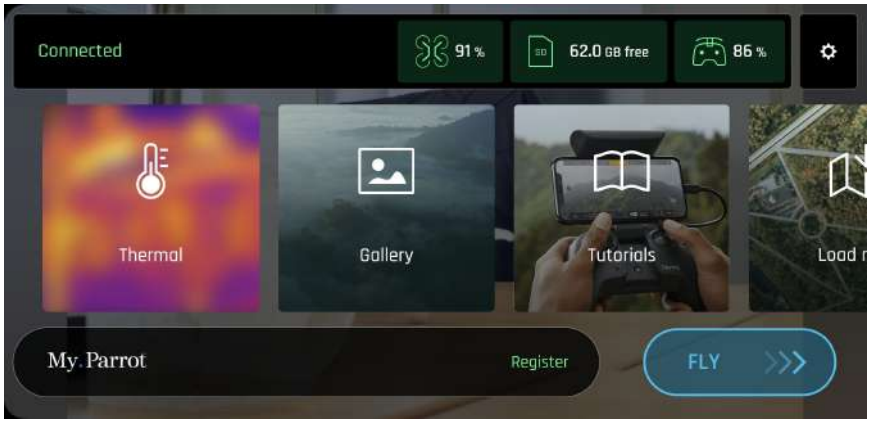

9. Ensure that ANAFI USA and the Skycontroller are paired.

Refer to *Pairing ANAFI USA to a Skycontroller 4* on page 28 for more information.

10. On ANAFI USA, remove the gimbal's protective cover.
11. Unfold ANAFI USA's arms.
12. Press and hold ANAFI USA's ⏻ **Power** button for approximately 2 seconds to power it on.

The drone's fan starts to turn.

13. Place ANAFI USA on a flat horizontal surface.
14. Check for ecosystem updates to ensure maximum performance and safety. Tap the **Drone information** and **Controller information** tiles for more information.

IMPORTANT: Regularly refer to the Release Notes ANAFI USA available on the Parrot website, to ensure that you have the latest versions of the drone and controller firmware, and FreeFlight 6 USA App. If you are an offline user, contact your local Parrot reseller to obtain the .apk file to perform an offline system update. Refer to *FreeFlight 6 USA offline update via .APK file* on page 32

15. Calibrate ANAFI USA, Skycontroller 4, or both if required. Follow the instructions on your device's screen.

Refer to *Thermal calibration* on page 47, *Camera Calibration* on page 56, and *Gimbal calibration* on page 57

All systems are ready for flight.

16. Ensure that your flying zone is safe and clear.
17. On the FreeFlight 6 USA homepage, tap **FLY >>>**

The FreeFlight 6 USA HUD opens. Refer to *FreeFlight 6 USA* on page 30 for more information.

18. On the Skycontroller, press **Take-off/land** to start the flight operation.

WARNING: Maintain a distance of at least 2 m (6 ft) from the drone.

© 2026 Parrot Drones SAS. All Rights Reserved.

Foreword

ANAFI USA was designed and optimized to fly as is. Parrot strongly advises against using any add-on or accessory attached to ANAFI USA, such as feet extensions, buoys, hulls, etc. Accessories impose extra weight on the drone and its motors. Electronic accessories may also interfere with the drones' communications.

IMPORTANT: The maximum take-off mass (MTOM) of ANAFI USA is 644 g (1.42 lb). Parrot recommends that you do not equip your drone with an accessory, as it reduces flight time.

CAUTION: Do not alter the center of gravity of the drone.

ANAFI USA ecosystem

In this user guide, the word *ecosystem* refers to the drone (ANAFI USA), its controller (Skycontroller 4) and the FreeFlight 6 USA flying app. The word *device* refers to the iOS or Android smartphone or tablet on which FreeFlight 6 USA is installed.

Wi-Fi

Parrot recommends that you switch off your device's Wi-Fi connection when flying ANAFI USA with Skycontroller 4 and your device. When the device's Wi-Fi is switched off, the drone and the controller communicate through ANAFI USA's Wi-Fi network. Activating your device's Wi-Fi may result in interference.

Your device's Wi-Fi must only be activated, and connected to ANAFI USA's Wi-Fi network, when you want to fly the drone using your device as the sole controller.

GPS

ANAFI USA does not require a satellite synchronization, or fix, to take off (for example, GPS, GLONASS, Galileo). It can therefore be piloted indoors and through cluttered areas, stabilized by its onboard sensors.

WARNING: If you choose to fly without GPS, you must ensure that the ground has sufficient texture, and is sufficiently illuminated in order to optimize the optical flow of the vertical camera. Suboptimal conditions such as non-textured, or poorly illuminated ground may cause ANAFI USA to drift.

However, automated and assisted flight modes require both ANAFI USA and the FreeFlight 6 USA device synchronization to geocoordinate satellites. The Skycontroller 4 alone does not have geo-positioning capacity.

Parrot recommends ANAFI USA pilots to always set up, start, and finish their automated and assisted flights from wide open areas, such as a sports field.

CAUTION: ANAFI USA flight stability performance may be impacted when you fly at night without a GPS fix. To reduce the possibility of drifts, Parrot recommends that you always wait for GPS synchronization before flying the drone at night. If GPS synchronization is not achieved with the drone on the ground, Parrot recommends that you leave the drone in hover flight until the GPS synchronizes.

If you continue to have difficulties with flight stability, reduce the following values in the **Presets** menu:

- Global reactivity
- Banked turn
- Inclination
- Vertical speed
- Rotation speed

Refer to *Presets* on page 46 for more information.

4K video formats

4K video formats are professional grade media which may not be read natively by slower computers.

Furthermore, for software reasons, the stream broadcast by Skycontroller 4 is better defined in the 1080p video mode than in 4K (or any photo mode), especially when using zoom. For this reason, Parrot recommends favoring default video settings (1080p, 30 fps) for direct observation. Reserve 4K video recording for post-mission data exploitation.

ANAFI USA smart batteries

One smart battery comes preinstalled on ANAFI USA. If you remove the battery, you must reinstall it in the same orientation. Do not install the battery upside down. Ensure that you install the battery correctly to avoid exposing the battery and the drone to irreparable electrical damage.

IMPORTANT: The LEDs and power button face up in the correct orientation

ANAFI USA and Skycontroller 4 batteries enter a **Wintering mode** when not in use for 10 consecutive days. You must wake up and fully charge the batteries before you fly ANAFI USA for the first time.

HDMI

Skycontroller 4 has a micro-HDMI port, which enables you to stream ANAFI USA images to a screen or to HDMI goggles. Parrot recommends using a certified micro-HDMI to HDMI cable (not included in the box) to connect external pieces of equipment to the Skycontroller 4. Uncertified cables may impair the ecosystem's Wi-Fi performance. Certified HDMI cable packaging displays the following logo:

User guide screenshots

For clarity and brevity, some screenshots in this guide, illustrating functions common to all the drones of the series, have been taken from earlier ANAFI series user guides. However, all screenshots associated with specific ANAFI USA functions are up to date.

Technical support

Parrot recommends that you use your My.Parrot account (or create one if ANAFI USA is your first Parrot drone) to allow Parrot to store your ANAFI USA flight data. Sharing your data, even anonymously enables us to improve our products and directly benefits all identifiable users in case they need to contact Parrot support teams.

CAUTION: If you do not share flight data / logs for the purposes of receiving support, you limit your ability to receive technical support, warranty, or both from Parrot.

Information related to Privacy Rights

For more information about the appearance of individuals in videos and photos taken by a drone, refer to the Flight Safety Guide included in the ANAFI USA packaging.

© 2026 Parrot Drones SAS. All Rights Reserved.

Disclaimer

1. ANAFI USA IS NOT A TOY and must not be used or handled by persons under the age of 18 years.
2. BEFORE USING ANAFI USA:
   A. CAREFULLY READ the user guide and all information and documentation available on www.parrot.com/en. Documentation is subject to change and may be updated at any time and without prior notice (hereinafter referred to as "Parrot Documentation"). SPECIAL ATTENTION must be given to the paragraphs marked: ⚠ **Warning**, **Caution**, **Important**
   B. Ensure that the complete drone ecosystem is up-to-date. Parrot regularly releases firmware updates for:
      - FreeFlight 6 USA
      - ANAFI USA
      - Smart Battery
      - Skycontroller 3, and Skycontroller 4

IMPORTANT: Regularly refer to the Release Notes available on the Parrot website, to ensure that you have the latest firmware versions of the drone, controller, and application. If you are an offline user, contact your local Parrot reseller to obtain the .apk file to perform an offline system update. Refer to the *FreeFlight 6 USA offline update via .APK file* on page 32 for more information.

Updates add new features, and improve stability, and performance of the complete system. Updates are mandatory and must be systematically performed prior to any flight to ensure maximum performance and safety. Flying with a non-up-to-date system may impact warranty rights and jeopardize safety requirements.

   C. ENSURE YOU ARE AWARE OF THE REGULATIONS APPLICABLE TO THE USE OF DRONES AND THEIR ACCESSORIES (hereinafter referred to as "Applicable Regulations");
   D. REMEMBER that ANAFI USA may expose others and yourself to EQUIPMENT DAMAGE, PERSONAL INJURY, OR BOTH, which could result in serious harm or death.

3. All Parrot drones must always be used with genuine Parrot smart batteries. Non-genuine batteries are forbidden, and their use voids the warranty, and impacts safety requirements.
4. All Parrot drone systems include charger(s). These are the only recommended chargers to use to charge your Parrot drone's Smart Battery and Skycontroller 3 and Skycontroller 4. Other generic USB chargers may be used provided that they are certified according to the country of use and have the applicable rating/specification. Performance and warranty are only guaranteed when using a genuine charger included in the Parrot drone system. Parrot takes no responsibility (warranty or safety) for third party USB chargers being used with a Parrot system.
5. Ensure that all calibrations are performed. Refer to *Thermal calibration* on page 47 for more information.

IMPORTANT: ANAFI USA's warranty is void if you fly the drone without the required calibrations.

6. Videos and photos promoted and advertised by Parrot Drones SAS and its affiliates have been made by and with experienced professionals and drone pilots. IN CASE OF DOUBT RELATING TO THE USE OF YOUR ANAFI USA DRONE AND ITS ACCESSORIES, ALWAYS REFER TO THE MOST RECENT VERSION OF THE PARROT DOCUMENTATION.

7. TO THE MAXIMUM EXTENT PERMITTED BY APPLICABLE LAW, Parrot Drones SAS, ITS SUBSIDIARIES, AND THEIR RESPECTIVE DISTRIBUTORS AND RETAILERS SHALL NOT BE LIABLE FOR ANY DAMAGES ARISING FROM, OR IN CONNECTION WITH NON-COMPLIANCE OF PARROT DOCUMENTATION OR THE APPLICABLE REGULATIONS BY YOURSELF OR ANY PERSON USING YOUR ANAFI USA.
8. 3rd party licenses

IMPORTANT: It is the user's responsibility to ensure they have the correct licenses and/or subscriptions.

© 2026 Parrot Drones SAS. All Rights Reserved.

Technical specifications

AIRCRAFT

- Size folded: 252 x 104 x 84 mm (9.9 x 4.1 x 3.3”)
- Size unfolded: 282 x 373 x 84 mm (11.1 x 14.7 x 3.2”)
- Mass: 501 g (1.10 lb)
- Maximum take-off mass (MTOM): 644 g (1.42 lb)
- Maximum flight time: 32 minutes
- Maximum horizontal speed: 14.7 m/s (32.8 MPH)
- Maximum ascent speed: 4 m/s (8.9 MPH)
- Maximum descent speed: 3 m/s (6.7 MPH)
- Maximum wind resistance:
  - During flight: 14.7 m/s (32.8 MPH)
  - During take-off/landing: 14.7 m/s (32.8 MPH)
- Maximum propeller speed: 11,000 RPM
- Sound power level: 84 dBA
- Service Ceiling: 5,000 m above MSL (Mean Sea Level)
- User defined geofencing
- Operating temperatures: -36.0 °C to 50.0 °C (-32.8 °F to 122.0 °F)
- No take-off temperature limitation - if battery temperature is maintained between 5.0 °C and 70.0 °C (41.0°F and 158.0°F)
- IP53: Rain and dust resistant
- Maximum static thrust: 12.92 N
- Thrust to weight ratio: 2.63
- No NFZ (no-fly zone) limitation
- Takes off from / lands in the hand of the operator
- Indoor flight
- Connectivity and storage:
  - MicroSD card slot
- Deployment time: 55 seconds

RADIO LINK

- Direct video stream resolution: 720p
- Wi-Fi 802.11a/b/ g/n:
  - AES 128 encryption
  - Range: 4 km (2.49 mi)
  - Skycontroller 4 Operating frequencies: 2.4 GHz, 5 GHz, UNII-1, & UNII-3
  - Skycontroller 3 Operating frequencies: 2.4 GHz, 5 GHz, UNII-1, & UNII-3

SENSORS

- Satellite navigation:
  - GPS
  - GLONASS
  - Galileo
- Barometer and magnetometer
- Vertical camera and Ultrasonic
- 2 x 6-axis inertial measurement units (flight and camera)
- 2 x 3-axis accelerometers
- 2 x 3-axis gyroscopes

CYBERSECURITY

- Zero data shared without user consent
- TAA & NDAA compliant
- Blue sUAS program approved
- Manage your data privately between drone and device OR share anonymous data on secured European servers
- SD card AES-XTS encryption with a 512-bit key
- Digitally signed firmware
- Transparency & Bug bounty continuous security check

IMAGE STABILIZATION

- 3-camera IR/EO Stabilized gimbal:
  - Hybrid: 3-axis
  - Mechanical: 2-axis roll / pitch
  - Electronic (EIS): 3-axis yaw / roll / pitch
- Controllable gimbal tilt range: -90° to +90°

EO IMAGE CHAIN

- 2 Sensors: 1/2.4’’ 21 MP
- Digital zoom: 32x
- Electronic shutter speed: 1 s to 1/10,000 s
- ISO range: 100 to 3,200
- Video resolution: 4k/FHD/HD
- Video format: MP4 (H.264)
- Photo resolution:
  - Wide: 21 MP (84.0° HFOV)
  - Rectilinear: up to 16 MP (up to 75.5° HFOV)
- Photo formats: JPEG, DNG (Digital Negative Raw)
- Aperture: f/2.4

IR IMAGE CHAIN

Sensor: FLIR BOSON

- Resolution: 320 x 256
- Temperature range: -40.0 °C to 150.0 °C (-40.0 °F° to 302.0 °F)
- Thermal sensitivity: <60 mK
- Measured IR wavelength range: 7.5 to 13 micrometers
- Photo format: JPEG
- Video format MP4 (H.264)
- Video recording resolution: 1280 x 720, 9 fps

SMART BATTERY

- Size: 105 x 58 x 35 mm (4.1 x 2.3 x 1.4")
- Mass: 199 g (0.44 lb)
- Type: High density LiPo (197 Wh/kg)
- Capacity: 3,400 mAh
- Voltage (nominal): 11.55 V (3 x 3.85 V cells)
- Maximum charging power: 30 W
- Battery life: 32 minutes
- Charging port: USB-C
- Charges fully in 2 h with a USB-PD (Power Delivery) charger – not included in the pack
- Charges fully in 3 h 20 mins with the provided charger's fast-charging port

GROUND CONTROL STATION (SKYCONTROLLER 3)

- Size folded: 94 x 152 x 72 mm (3.7 x 6.0 x 2.8”)
- Size unfolded: 153 x 152 x 116 mm (6.0 x 6.0 x 4.6”)
- Mass: 283 g (0.62 lb)
- Battery capacity: 2,500 mAh
- Battery voltage (nominal): 3.6 V
- Battery life: Charges fully in 1 h 10 mins with a 1.85 A charger.
  - Android device: Discharges in 2 h 30 mins
  - iOS device: Discharges in 5 h 30 mins
- Compatible mobile devices: Screen size up to 6.5”
- Connectivity:
  - USB-C (charging)
  - USB-A (connecting)

GROUND CONTROL STATION (SKYCONTROLLER 4)

- Minimum size (without device): 238 x 147 x 55 mm (9.4 x 5.8 x 2.2”)
- Maximum size (with device): 315 x 147 x 55 mm (12.4 x 5.8 x 2.2”)
- Mass: 610 g (1.35 lb)
- Battery capacity: 3,350 mAh
- Battery voltage (nominal): 7.2 V
- Battery charging duration: 3 h 45 mins (varies according to device used and state of charge)
- Battery life: 6 h(varies according to device used and state of charge)
- Compatible mobile devices: Screen size up to 8"
- Charges smartphones and tablets
- IP5X: Dust resistant
- Connectivity:
  - 2 x USB-C (charging and connecting)
  - Micro-HDMI port

CARRY CASE

- Size: 385 x 305 x 170 mm (15.2 x 12.0 x 6.7")

Parrot

DIMENSIONS

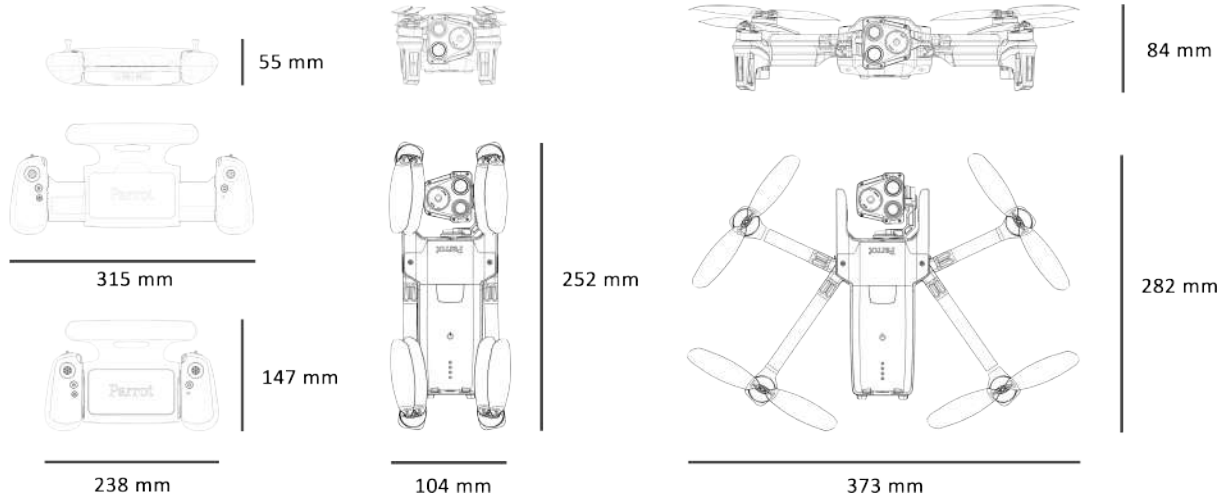

Images not to scale

© 2026 Parrot Drones SAS. All Rights Reserved.

Pack contents

Your ANAFI USA pack contains:

- 1 Parrot ANAFI USA drone
- 1 Parrot Skycontroller 3, or Skycontroller 4
- 3 smart batteries (2+1 preinstalled on ANAFI USA)
- 1 multi-port fast USB charger
- 1 additional set of propeller blades
- 4 USB-A/USB-C cables
- 1 USB-C/USB-C cable (for Skycontroller 4 packs only)
- 1 additional set of joysticks (for Skycontroller 4 packs only)
- 1 gimbal protection cover
- 1 Flight Safety Guide
- 1 hard case

**Pack contents image shows Skycontroller 4 only*

ANAFI USA

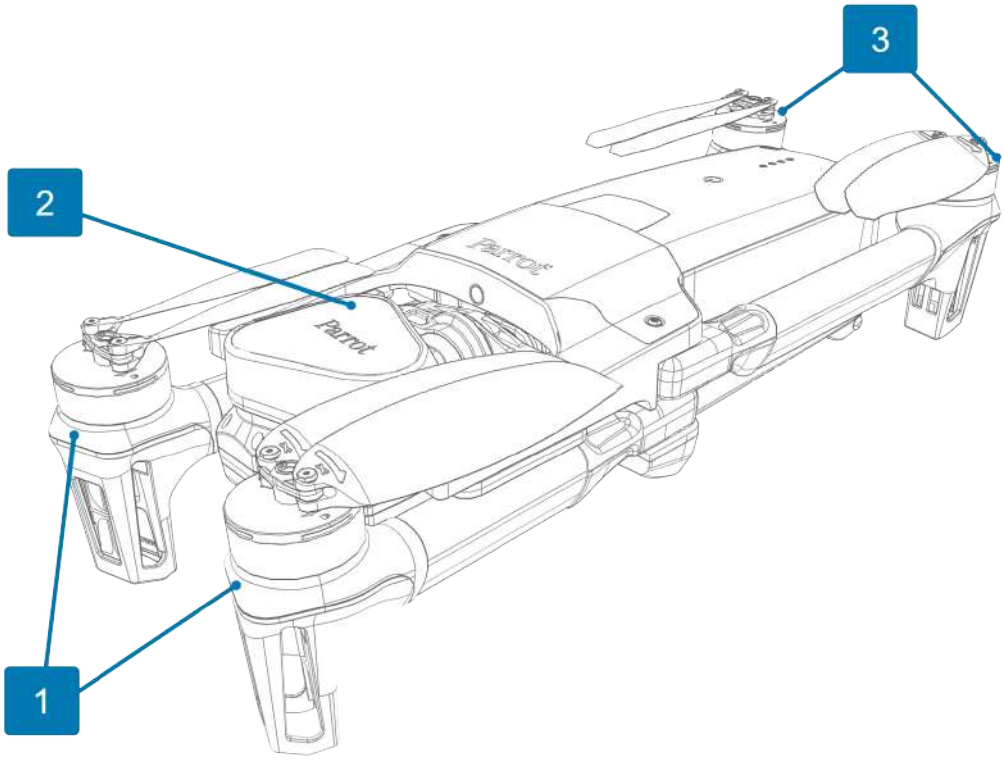

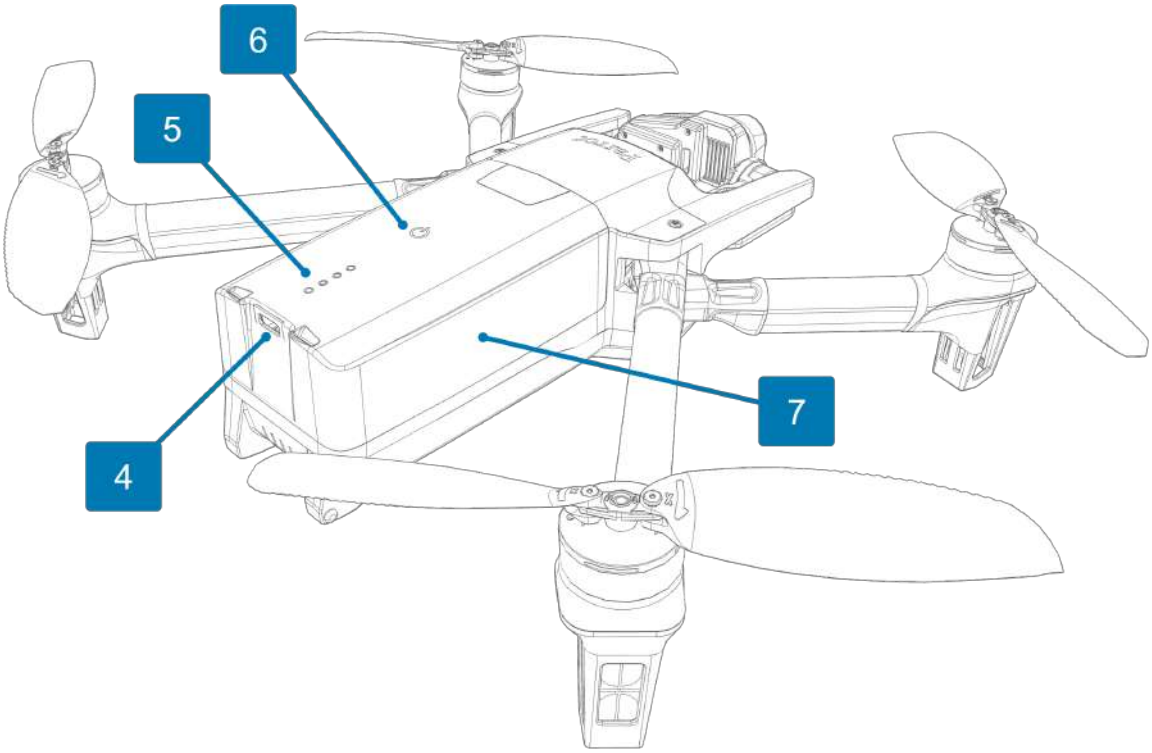

1. Front foldable arms and propellers
2. Gimbal protective cover
3. Rear foldable arms and propellers
4. USB-C charging port
5. Charge level LED indicators
6. ⏻ **Power** button
7. Smart battery

© 2026 Parrot Drones SAS. All Rights Reserved.

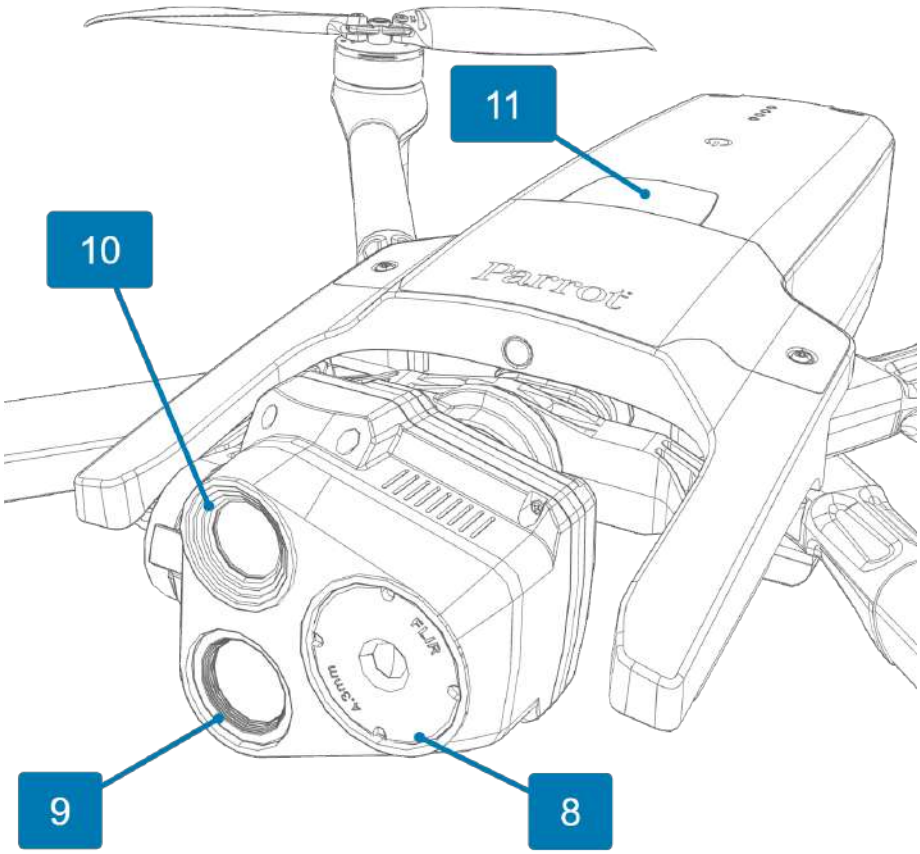

8. Thermographic camera
9. 21 MP telephoto camera
10. 21 MP wide angle camera
11. Battery extraction button

Smart LiPo battery

One smart battery comes preinstalled on ANAFI USA. You can charge the smart battery when installed on ANAFI USA, or when removed from ANAFI USA. If you remove the battery, you must reinstall it in the same orientation. Do not install the battery upside down as it may expose the battery and the drone to irreparable electrical damage. Always use genuine Parrot smart batteries. Non-genuine batteries are forbidden, and their use voids the warranty and impacts safety requirements.

> **NOTE:** LiPo batteries gradually lose capacity after 300 charge/discharge cycles.

Battery removal

To remove the smart battery from the drone:

1. Unfold the drone's arms,
2. Press the battery extraction button located on top of the battery
3. Gently slide the battery toward the back of the drone to disengage it.

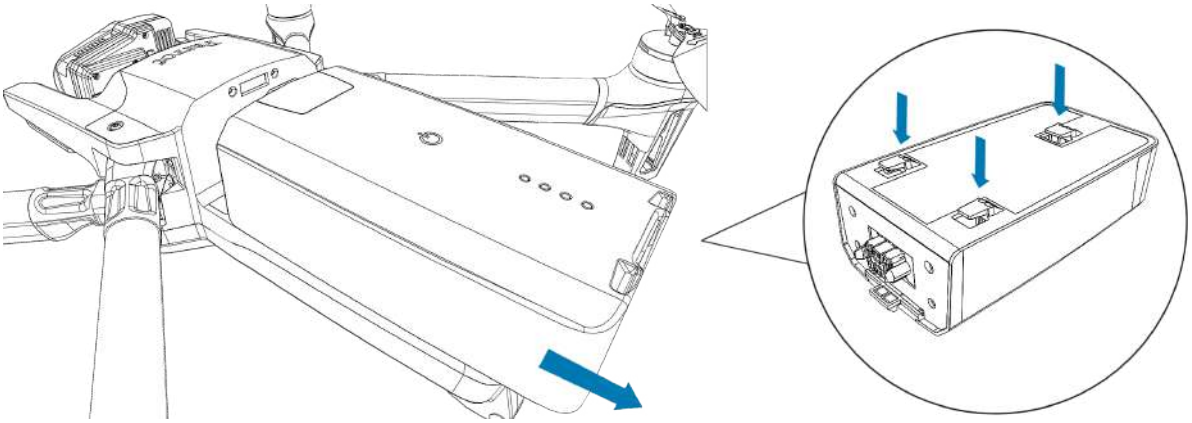

Battery installation

To install the smart battery on the drone:

1. Unfold the drone's arms
2. Position the battery's three hooks into the drone's corresponding slots and
3. Slide the battery firmly into the drone until you hear a click.
4. Ensure that the battery is tightly secured into the drone.

> **IMPORTANT:** The LEDs and ⏻ **Power** button face up in the correct orientation.

Battery charging

To charge the smart LiPo battery, use the enclosed USB-A to USB-C cable to connect the battery to its enclosed charger. Alternatively, charge the battery from:

- a desktop or laptop computer's USB port.
- a power bank's USB-A port.
- a Power Delivery adapter or charger (USB-PD standard) using a USB-C to USB-C cable

Full charging time depends on charger specifications and ambient temperature. At 20°C, the full charge duration is approximately 3 hours 20 minutes. With a USB-PD adapter or charger, full charge duration reduces to 1 hour 55 minutes.

> **IMPORTANT:** Parrot does not recommend ANAFI USA users to invest in a USB-PD power bank, as not all of them support USB-C to USB-C charging of ANAFI USA's battery. Due to the nature

© 2026 Parrot Drones SAS. All Rights Reserved.

of the USB-C technology, some USB-PD power banks recharge on ANAFI USA's smart battery, rather than the other way around.

CAUTION: Other generic USB chargers may be used provided that they are certified according to the country of use, and have the applicable rating/specification. Performance and warranty are only guaranteed when using the genuine charger included in the Parrot drone system.

When the battery is charging, its 4 LEDs indicate in real time the charge level:

LED 1	LED 2	LED 3	LED 4	Charge Level
				0 - 25% charged
				26 - 50% charged
				51 - 75% charged
				76 - 99% charged
				Fully charged

When the battery is not installed on ANAFI USA, check the charge level at any time by pressing the battery ⏻ **Power** button. When the battery is installed on the drone, and when ANAFI USA is powered on, the number of steady LEDs enables you to estimate your remaining flying time:

LED 1	LED 2	LED 3	LED 4	Charge Level	Remaining flight time
				0 - 25% charged	less than 8 minutes
				26 - 50% charged	8 - 16 minutes
				51 - 75% charged	17 - 24 minutes
				76 - 100% charged	25 - 32 minutes

Battery care and safety

ANAFI USA's smart battery features a wintering mode to increase its durability and simplify its care. When not in use for a prolonged period, store the battery half-charged. If the battery is not used for 10 days, it discharges itself to 65% charge, over a 48-hour period.

After a maximum of 12 days without use, the smart battery enters hibernation with a charge level which never exceeds 65%. If you leave your ANAFI USA battery for 12 days, the ⏻ **Power** button does not activate the charge level LED indicators. You must charge the battery to exit the wintering mode and start operating as described in the earlier paragraphs. This behavior preserves the battery over time.

TIP: always run a full charge of your smart battery before flying ANAFI USA.

ANAFI USA's smart battery must be handled, transported and stored with care:

- Do not store the battery long-term (1 month or more) with a charge level below 30%;
- Never leave the battery unattended while charging;
- Never expose the battery to extreme temperatures, neither hot, nor cold;
- Never leave the battery exposed to direct sunlight for prolonged periods of time;
- Never charge the battery when it is still warm from use (wait for at least 20 minutes);
- Never use or recharge a damaged or swollen battery;
- Always store your battery in a dry, ventilated environment, at a temperature close to 20°C;
- Always carry your battery in a fire-retardant bag or case (unless it is installed on ANAFI USA: it can then be transported with the drone, inside its carrying case).

The boundary conditions to store the battery are:

- a temperature from -20°C to 35°C;
- a relative humidity lower than 75% (rh);

NOTE: ANAFI USA's smart battery only charges in ambient temperatures between +10°C to +45°C. Flying time is reduced if you fly in temperatures approaching 0°C. The ideal operating temperature of the smart battery is 20°C. Ensuring that the smart battery remains as close as possible to 20°C before starting a flight minimizes the reduction in the smart battery's capacity in cold environments.

TIP: Use your body heat to maintain the temperature of the battery. Keep the battery in your pocket prior to flying in a cold environment.

If the behavior of your battery is not consistent with the information in this section, and if the battery does not power your ANAFI USA, you must hard reset your battery. To perform a battery hard reset:

1. Plug the battery into a power source with the enclosed cable,
2. Press the battery's ⏻ **Power** button pressed for 15 seconds (regardless of the behavior of the LEDs).

The reset is successful if the battery's LEDs flash quickly, one after the other, alternating green and red.

Battery state of health

On the FreeFlight 6 USA homescreen:

1. tap the **Drone information** tile
2. tap the **Battery** tile.

The **Battery information** screen opens and provides the status of the following battery characteristics:

- **Serial number**
- **Software version**
- **Hardware revision**
- **First usage**
- Charge level (%)
- Individual cell voltage (mV)
- Temperature (°C)
- Total **Voltage** (V)
- **Total Capacity** (mAH)
- **State of health** (%)
- **Cycles**

Battery update

ANAFI USA smart batteries require updates, like the drone itself, its controller and its controlling application FreeFlight 6 USA. When a battery update is available with a FreeFlight 6 USA release, a

© 2026 Parrot Drones SAS. All Rights Reserved.

message appears in the app. Follow the in-app instructions to update your battery.

> **CAUTION:** Keep your battery plugged into a power supply throughout the software update procedure. Repeat the procedure with all your batteries.

Installing a microSD card

This section explains how and where to install a microSD card in ANAFI USA.

The microSD card slot is located under the battery.

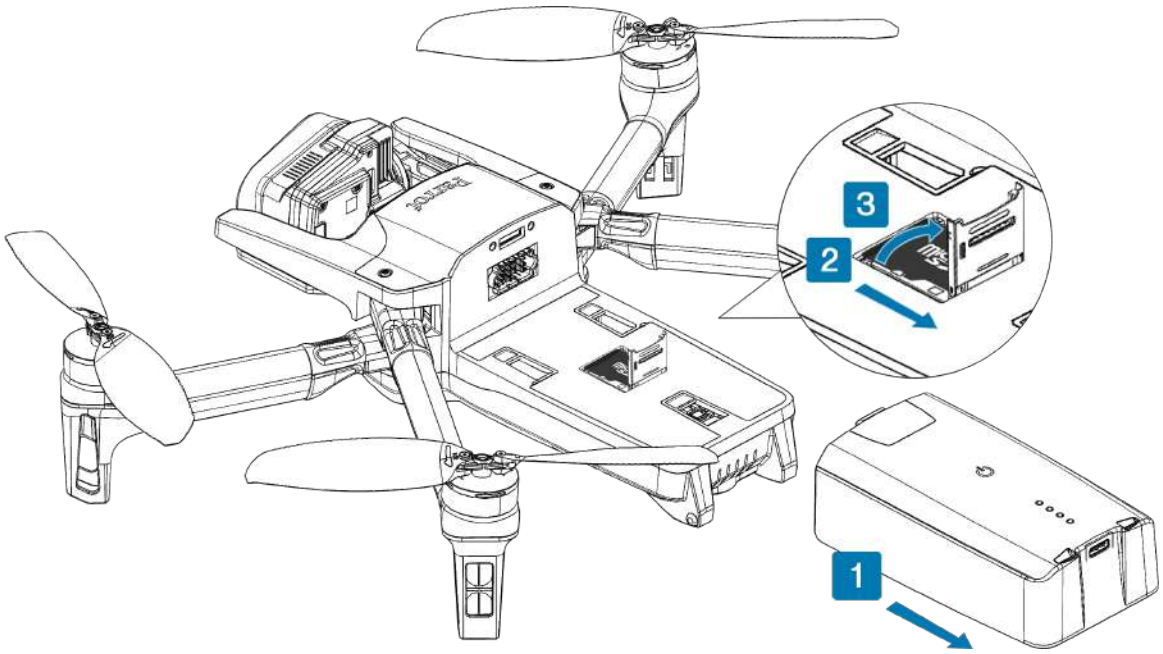

To install the microSD card:

1. Remove the battery to expose the microSD card slot. Refer to *Battery removal* on page 19 for more information.

The microSD card slot is protected by a small metal lock.

2. To open the lock, slide it toward the back of the drone body.

The lock makes a slight clicking sound.

3. The lock hinges at the back, lift the front part of the lock to open the slot.
4. Insert the microSD card into the keyed slot.

> **IMPORTANT:** In the correct orientation, the microSD card's metal contacts face down. The notch of the microSD card faces toward the back of the drone. A **closed-lock-with-arrow** icon, located to the right of the microSD slot, confirms how you must slide the lock to secure it in place.

5. To close the lock, push it back down toward the drone body.
6. To secure the lock in place, slide it toward the front of the drone body.

The lock makes a slight clicking sound.

Compatible microSD cards

For more information, refer to Parrot's List of compatible microSD cards.

Skycontroller 3

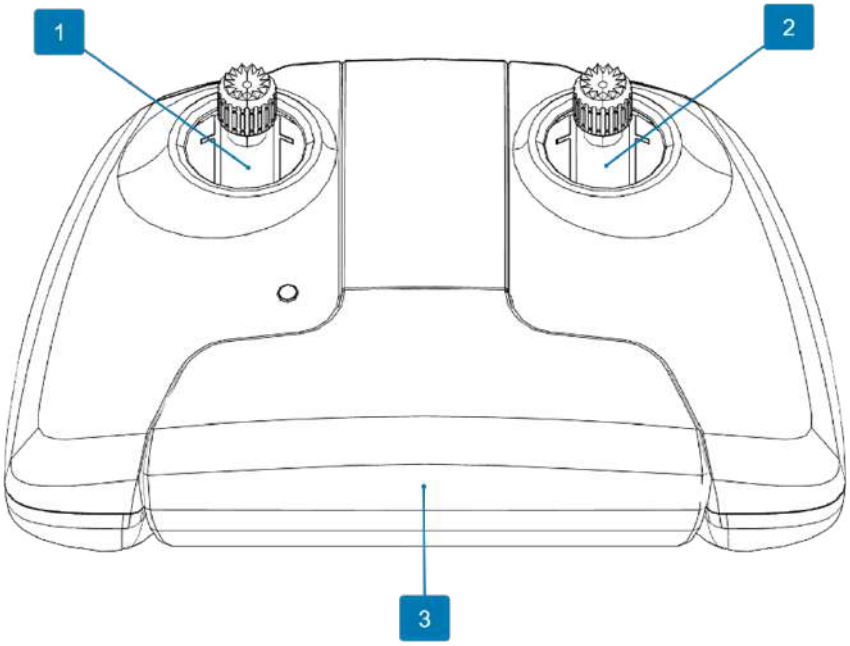

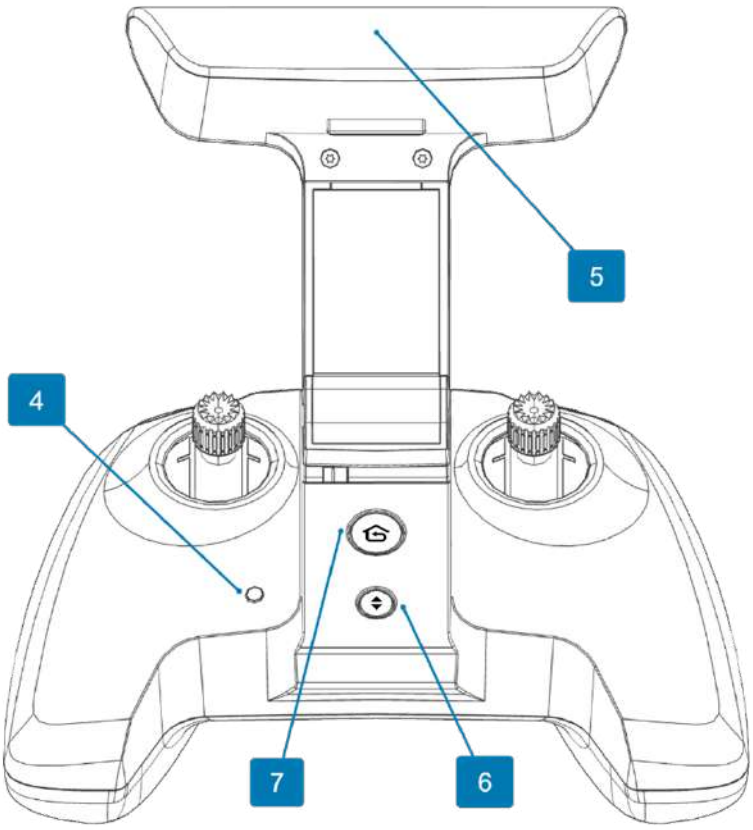

1. Left joystick
2. Right joystick
3. Power on foldable arm and device holder
4. Status LED
5. Wi-Fi antenna
6. ⬍ **Take-off/Land** button
7. ⌂ **RTH** (Return to Home) button

© 2026 Parrot Drones SAS. All Rights Reserved.

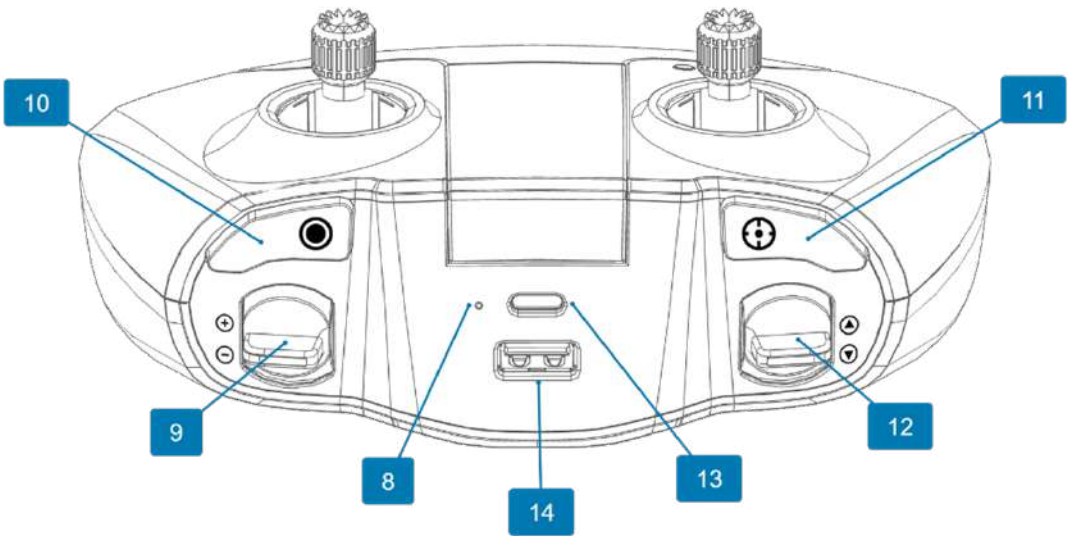

8. Charging LED
9. **Zoom** trigger. Down; zoom in. Up; zoom out
10. ● **Shutter** (take photo, start/stop filming)
11. ⊕ **Optics reset**. Returns to no tilt, 1x zoom
12. **Tilt** trigger. Down; tilts down. Up; tilts up
13. USB – C charging port
14. USB – A device port

LED status indicator color codes

When the Skycontroller 3 is powered on, its status LED indicator (number 4 on image) and its charging LED (number 8 on image) provide an instant visual indication:

Status LED indicator colors and behavior		
	Flashing green	Skycontroller 3 update in progress
	Alternating light blue/dark blue	Connecting to ANAFI USA
	Flashing light blue	No drone configured or incorrect WPA key
	Steady dark blue	Connected to ANAFI USA
	Alternating purple/dark blue	Autonomous flight in progress
	Alternating red/any color	Low battery alert (ANAFI USA, Skycontroller 3, or both)
Charging LED colors and behavior		
	Steady red	Charging
	Steady green	Charging

Pairing ANAFI USA to a Skycontroller 3

Follow this procedure to pair a drone and a controller for the first time, and to restore the lost pairing between a drone and a controller.

1. Verify that a compatible microSD card is inserted into ANAFI USA.
2. Press ⏻ **Power** on ANAFI USA.
3. Open the Skycontroller 3 to power it on.
4. Connect the drone and the controller with a USB cable (USB-A connection to the controller, USB-C connection to the drone).
5. The Skycontroller 3 status LED briefly flashes green to indicate it acknowledges ANAFI USA.
6. Wait for synchronization between Skycontroller 3 and ANAFI USA (steady dark blue LED on the controller): Verify that the left trigger of the Skycontroller 3 activates the drone's gimbal to ensure the synchronization is complete.
7. Disconnect the controller from the drone.

NOTE: This user guide has been updated for the most recent controller, the Skycontroller 4. The Skycontroller 3 is still compatible with ANAFI USA, but for the purposes of this user guide, all instructions refer to the Skycontroller 4. All instructions, unless otherwise specified, are also applicable to Skycontroller 3.

© 2026 Parrot Drones SAS. All Rights Reserved.

Skycontroller 4

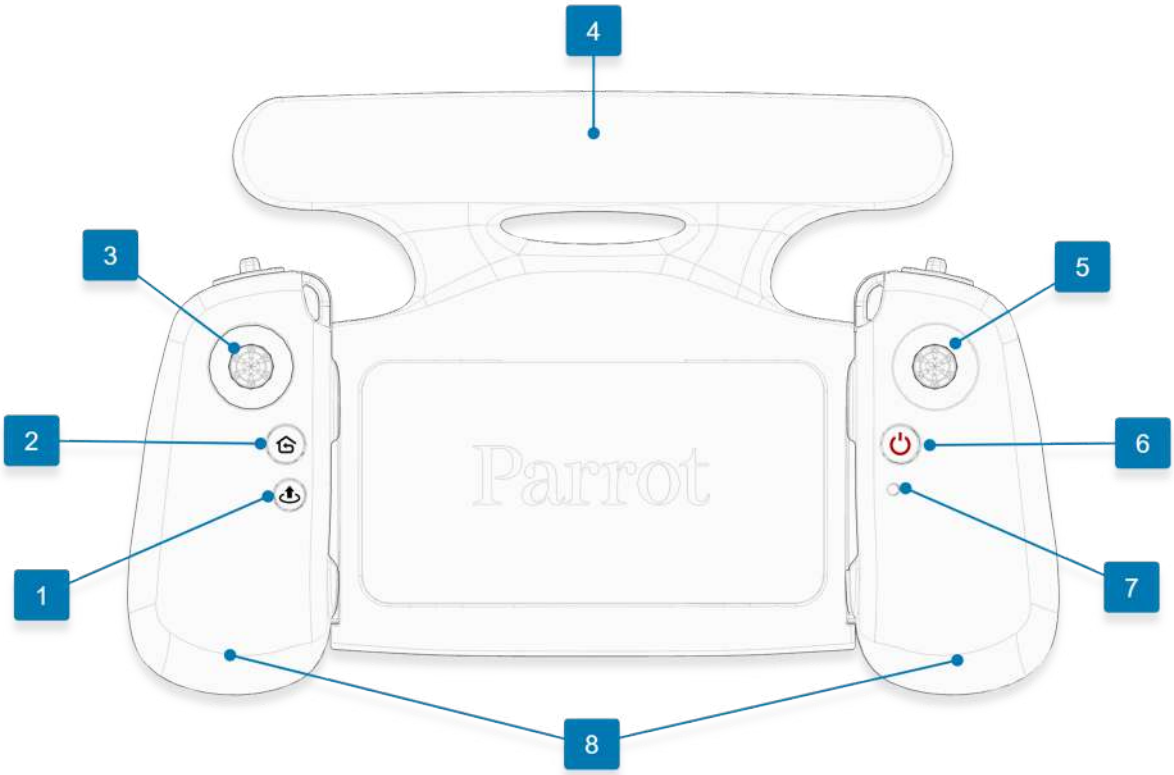

1. **Take-off/Land** button
2. **RTH** (Return to Home) button
3. Left detachable joystick
4. Wi-Fi antenna
5. Right detachable joystick
6. **Power** button
7. Status LED indicator
8. Sliding handles
9. Left neck strap loop
10. **Optics reset**
11. **Gimbal Tilt** trigger
12. **Zoom** trigger
13. **Media recording**
14. Right neck strap loop

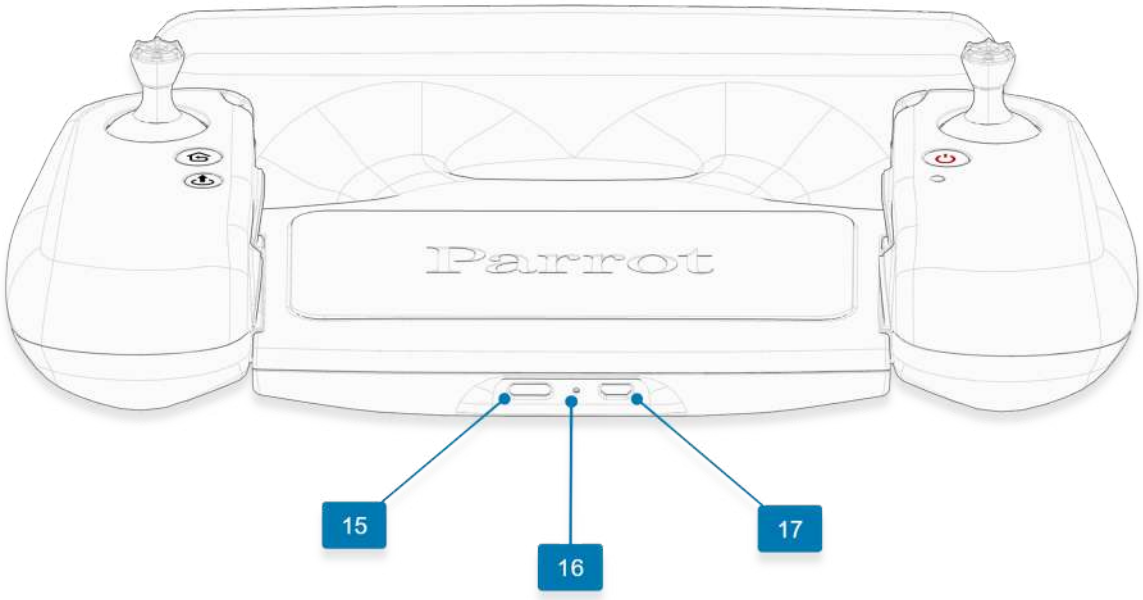

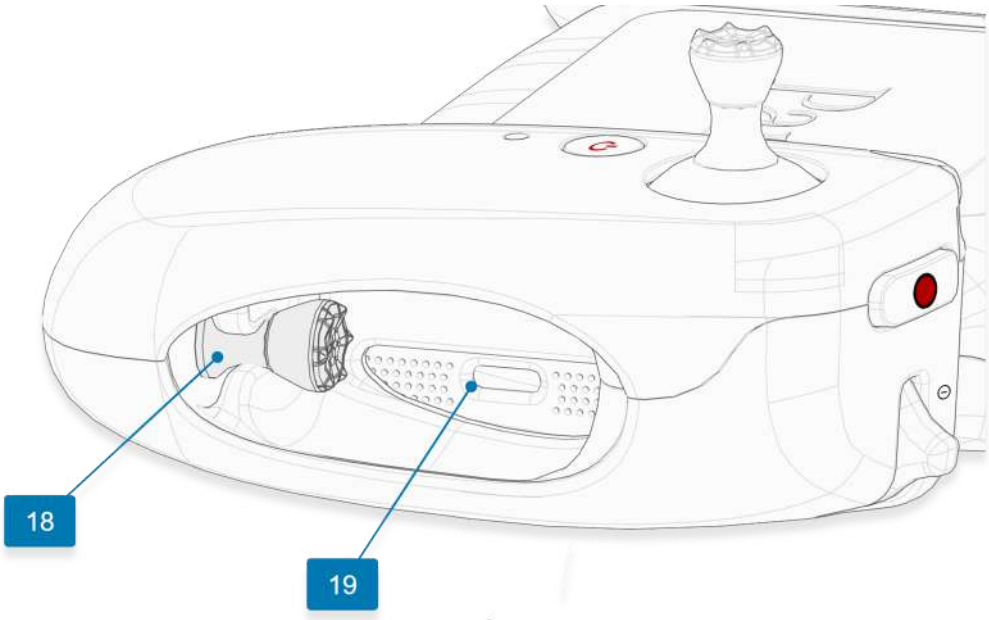

15. USB – C charging port
16. Charging LED
17. Micro - HDMI port
18. Left spare joystick storage (1 of 2)
19. USB – C device connection port

⚠ **WARNING:** If you press **RTH**, **Take-Off/Land**, and **Shutter** simultaneously, the EMERGENCY MODE on ANAFI USA activates immediately. EMERGENCY MODE instantly cuts power to all motors on ANAFI USA, which causes the drone to fall from the sky.

Refer to *Flying* on page 36 for more information.

NOTE: EMERGENCY MODE is available on Skycontroller 4 only.

© 2026 Parrot Drones SAS. All Rights Reserved.

LED status indicator color codes

When the Skycontroller 4 is powered on, its status LED indicator (number 7 on image) and its charging LED (number 16 on image) provide an instant visual indication:

Status LED indicator colors and behavior		
	Flashing green	Skycontroller 4 update in progress
	Alternating light blue/dark blue	Connecting to ANAFI USA
	Flashing light blue	No drone configured or incorrect WPA key
	Steady dark blue	Connected to ANAFI USA
	Alternating purple/dark blue	RTH in progress
	Alternating red/any color	Low battery alert (ANAFI USA, Skycontroller 4, or both)
Charging LED colors and behavior		
	Flashing green	Charging
	LED off	Charging

Pairing ANAFI USA to a Skycontroller 4

Follow this procedure to pair a drone and a controller for the first time, and to restore the lost pairing between a drone and a controller.

1. Verify that a compatible microSD card is inserted into ANAFI USA.
2. Press ⏻ **Power** on ANAFI USA.
3. Press ⏻**Power** on the Skycontroller 4.
4. Connect the drone and the controller with a USB cable (USB-C connection to the USB-C port inside the right handle of the controller, USB-C connection to the drone).

The Skycontroller 4 status LED repeatedly flashes green to indicate it acknowledges ANAFI USA, and to establish pairing protocols.

5. Wait for synchronization between Skycontroller 4 and ANAFI USA.

The controller shows a steady dark blue LED.

6. Verify that the left trigger of the Skycontroller 4 activates the drone's gimbal to ensure the synchronization is complete.
7. Disconnect the controller from the drone.

HDMI video sharing

Use a micro-HDMI to HDMI cable to connect the Skycontroller 4 to an external screen (or VR goggles). The screen displays ANAFI USA's video stream.

NOTE: External screens only display the drone's video stream, and none of the additional information provided by FreeFlight 6 USA. Operators can watch the drone's view on an external screen, while they navigate FreeFlight 6 USA menus (settings or dashboard) on the device associated to the Skycontroller 4.

To visualize thermal images through the HDMI port, you must have the settings defined to:

- Piloting HUD Media type: **Video**
- Piloting HUD Spectrum: **Thermal**
- Thermal settings: Thermal post-processing: **No**

TIP: Use a certified micro-HDMI to HDMI cable (not included in the box) to connect external pieces of equipment to the Skycontroller 4. Uncertified cables may impair the ecosystem's Wi-Fi performance.

© 2026 Parrot Drones SAS. All Rights Reserved.

FreeFlight 6 USA

This section explores FreeFlight 6 USA functions, starting with a presentation of the top and bottom bars of the HUD (iOS and Android).

The FreeFlight 6 USA HUD (heads-up display) interface enables you to access all the features of ANAFI USA, from your device's screen.

Tap **FLY** to access the HUD on the FreeFlight 6 USA homepage.

Presentation of the HUD

1. < Back to homepage
2. Drone ground speed
3. Drone height relative to take-off point
4. Drone horizontal distance from pilot
5. Next available action
6. Controller box (charge and GPS sync)
7. Drone box (charge and GPS sync)
8. Preferences
9. Speed box
10. Piloting modes
11. Cineshots box
12. Photo/video toggle
13. Photo/Video mode box
14. Photo/Video settings box
15. Soft shutter & timer/No. of media (Photo mode)
16. Map center toggle (Pilot/Drone)

Overview of drone Piloting, Video, & Photo modes, Cineshots, SmartDronies, & Dronies:			
***Piloting modes*:**	Manual flight Cameraman Follow Me Smartdronies FPV Flight Plan Touch & Fly	***Cineshots*:**	360° (left & right) Reveal (30 & 60m) Spiral (30 & 60m) Epic (30 & 60m)
***Video modes*:**	Standard Cinema Hyperlapse High-Framerate Slow Motion	***Piloting modes*** & **POI Dronies:**	Orbit Parabola Dolly Zoom Boomerang
***Photo modes*:**	Single Timer Burst Bracketing Panorama Timelapse GPS Lapse	**Follow Me *Dronies*:**	Orbit Parabola Tornado Boomerang

TIP: Ensure that both GPS icons are green (and not red) before you make ANAFI USA take off. This means that the Skycontroller 4 and ANAFI USA are both synchronized to enough GPS, GLONASS, and Galileo satellites to optimize the stability of the drone, especially at higher altitudes.

© 2026 Parrot Drones SAS. All Rights Reserved.

FreeFlight 6 USA offline update via .APK file

If for any reason you choose not to download or update FreeFlight 6 USA via the Play store, you can alternatively update the system via an APK file (.apk). This update method does not require an internet connection to your Android device.

> **CAUTION:** When you update FreeFlight 6 USA offline, do not uninstall the old version of the app, and then perform a fresh install. If you uninstall the old version, the application data, and map contents are deleted.

> **NOTE:** This procedure is not available on iOS.

Follow this procedure to update FreeFlight 6 USA via an APK file:

1. Obtain the **FreeFlight6Usa-release.apk** file from Parrot or your genuine Parrot reseller.
2. Copy the **FreeFlight6Usa-release.apk** file to your Android device's internal memory.
3. Open the file manager on your Android device.
4. Search for the **FreeFlight6Usa-release.apk** file that you saved in step 2.
5. Tap the **FreeFlight6Usa-release.apk** file.

A pop-up appears which asks you to allow installation of unknown apps.

6. Enable your Android device to install third-party applications.
7. Tap **Install**.

A window opens to notify you that the FreeFlight 6 USA application is installed.

8. Tap **Done**.
9. Open the FreeFlight 6 USA application.

A pop-up appears asking for authorization for the application to access your Android device.

10. Select **Always open FreeFlight 6 USA when Skycontroller is connected**.
11. Tap **OK**.

FreeFlight 6 USA is now up to date.

> **CAUTION:** Ensure that you obtain the APK file from Parrot, or your legitimate Parrot reseller. Your Android device and personal data are more vulnerable to attacks from unknown apps. After you update FreeFlight 6 USA, Parrot recommends that you revert your Android device to the original setting which prevents you from installing unknown apps.

Taking off

Ground take-off

1. Position ANAFI USA on a flat, even, and clear surface.
2. Press ⏻ **Power** on ANAFI USA.
3. Move at least 2 m (6 ft) away from ANAFI USA.
4. Check that the surroundings of the drone are absolutely clear.
5. Press **Take-off/Land** on Skycontroller 4, or tap the green **TAKE-OFF** box on the screen.

ANAFI USA takes off and stabilizes at 1 m (3 ft) from the ground, waiting for commands from the pilot.

Hand launch

A hand launch procedure is more dangerous than a ground take-off. Be especially careful with the hand launch feature. It requires complete focus. Do not become distracted and stay aware of your surroundings.

⚠ **WARNING:** DANGEROUS MANEUVER. RISK OF BODILY INJURY AND DAMAGE TO THE DRONE IN CASE INSTRUCTIONS ARE NOT FOLLOWED. LACERATION HAZARD. Do not touch the propeller blades during flight. Propeller blades can cause deep cuts if your fingers, or other body parts, come into contact with them. Keep the drone as far away from your face as possible. PARROT STRONGLY RECOMMENDS THAT YOU DO NOT PERFORM A HAND LAUNCH PROCEDURE INDOORS, DUE TO LOW STABILITY, AND INCREASED RISK.

TIP: Work as a team of 2 people to ease the pressure of multi-tasking: 1 person to perform the take-off procedure, while the other person focuses on flying the drone.

Pay attention to the wind direction and speed. Do not face the wind. Keep yourself at a safe distance from the drone considering the possibility of drifting with the wind.

When you first open FreeFlight 6 USA, a hand launch tutorial reminds you of the following procedure. Activate hand launch from this tutorial page.

Alternatively, activate the hand launch option from **PREFERENCES > Interface** of FreeFlight 6 USA (Refer to *Interface* on page 47 for more information.).

1. Press ⏻ **Power** to power on ANAFI USA.
2. Position the drone on your flat, open hand.

On the screen of your device, the green **TAKE-OFF** box is replaced by a blue **HAND LAUNCH** box.

3. Press **Take-off/land** on Skycontroller 4 or tap the blue **HAND LAUNCH** box on your device's screen.

The drone’s propellors start to rotate slowly, and the screen displays a hand-launch animation.

4. Wait until the propellers’ rotation speed stabilizes, then briefly and rapidly lift ANAFI USA up and forward with your open hand.

ANAFI USA becomes airborne. It stabilizes and waits for commands from the pilot.

Only perform a hand launch procedure when there is no other launch alternative.

© 2026 Parrot Drones SAS. All Rights Reserved.

CAUTION: In environments with sand, use hand launch, instead of ground take-off to prevent sand from penetrating the motors.

Deployment from a moving vehicle

Points of attention for the deployment of the drone from a moving vehicle:

- Whenever possible, mobilize two operators for the deployment of the drone from a moving vehicle.
- If only one operator is available, favor the **Take-off from a moving vehicle** procedure.
- If required by FreeFlight 6 USA and whenever possible, perform the magnetometer calibration of the drone far away from any metallic mass.
- When preparing a deployment from a ship or an armored vehicle, always keep your powered-on drone in your hand, away from the floor of the ship or the roof of the vehicle.
- The GPS fix is not mandatory to deploy the drone from a moving vehicle, but it is always recommended.
- In the unlikely situation where the drone becomes disoriented after a launch or a take-off from a moving vehicle (uncontrolled rotation), quickly and firmly take back the commands of the drone in rotation and elevation (left joystick laterally and upward in default mode) to retrieve flight control.

Hand launch from a moving vehicle

TIP: mobilize two operators for this procedure: one operator launches the drone while another operator controls the drone with both joysticks of the Skycontroller.

Activate the hand launch option from **PREFERENCES > Interface** of FreeFlight 6 USA (Refer to *Interface* on page 47 for more information.).

WARNING: Be especially careful when hand launching ANAFI USA from a moving vehicle. It requires complete focus. Do not allow yourself to become distracted and stay aware of your surroundings.

1. Press ⏻ **Power** to power on ANAFI USA.
2. Position the drone in the palm of the operator's hand.

On the screen, the green **TAKE OFF** box is replaced by a blue **HAND LAUNCH** box.

IMPORTANT: Stabilize the speed and direction of the vehicle as much as possible. The maximum vehicle speed for this feature is 30 km/h in a straight line. Do not operate this feature in wind or downwind.

3. Press ⬍ **Take-Off/Land** on Skycontroller 3, or Skycontroller 4 (⏏)or activate the launch directly from the blue **HAND LAUNCH** box on the screen.

The propellers start to rotate slowly, and an animation on screen confirms the activation of a hand launch.

When the propellers' speed has stabilized:

4. Briefly and rapidly lift ANAFI USA upward with your open hand, and toward a direction free of all obstacles.
5. Immediately push the left joystick of Skycontroller 4 (elevation) upward (default control mode) to give altitude to the drone's altitude.

6. If possible, monitor the behavior of the hovering drone for 10 to 30 seconds before beginning the mission, to confirm the convergence of all sensors' estimates.

Standard take-off from a moving vehicle

⚠ **WARNING:** Be especially careful when performing a standard take-off from a moving vehicle. It requires complete focus. Do not allow yourself to become distracted and stay aware of your surroundings.

1. Press Power to power on ANAFI USA and position the drone in the palm of your hand.

IMPORTANT: Stabilize the speed and direction of the vehicle as much as possible. The maximum vehicle speed for this feature is 30 km/h in a straight line. Do not operate this feature in wind or downwind.

2. Press ⬍ **Take-off/Land** on Skycontroller 4, or activate the take-off directly from the green **TAKE OFF** box of the screen.
3. Immediately push the left joystick of Skycontroller 4 (elevation) upward (default control mode) to give altitude to the drone.
4. If possible, monitor the behavior of the hovering drone for 10-30 seconds before beginning the mission, to confirm the convergence of all sensors' estimates.

Deactivate the hand launch option from **PREFERENCES > Interface** of FreeFlight 6 USA (Refer to *Interface* on page 47 for more information.).

© 2026 Parrot Drones SAS. All Rights Reserved.

Flying

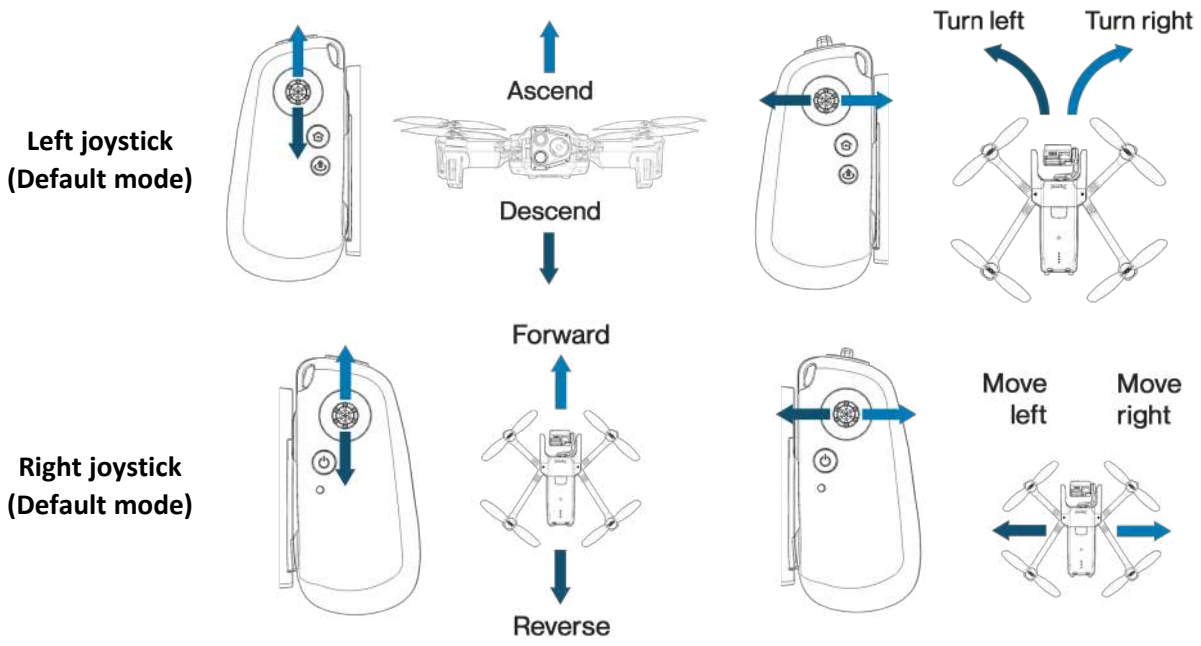

> **NOTE:** The images above show Skycontroller 4, however the controls are identical for Skycontroller 3

Modify ANAFI USA's controls through the **PREFERENCES** menu of FreeFlight 6 USA. Refer to *Controls* on page 46 for more information.

As a safeguard measure, ANAFI USA is programmed to instantly cut its motors in case of impact on one of its propeller blades; Always control your drone carefully.

> **WARNING:** ANAFI USA features an EMERGENCY MODE (on Skycontroller 4 only). If you activate EMERGENCY MODE in flight, all motors immediately cut out and instantly forces the drone to crash to the ground. The EMERGENCY MODE meets the regulatory requirement for Specific category flights in French national standard scenarios S1 & S3. The use of this mode is at the user's responsibility.

To activate EMERGENCY MODE, press the following buttons on Skycontroller 4 simultaneously:

- **RTH**
- **Take-off/Land**
- **Media recording**

Optimal speeds

Refer to *Presets* on page 46 for more information about the settings of the drone's flight behavior. Among these settings, 2 precise values enable you to optimize either ANAFI USA's flight time, or the distance it covers on a single battery.

Optimal autonomy (flight time)

At full throttle, a 9° inclination angle (pitch) enables ANAFI USA to maintain a 6 m/s horizontal speed. This speed, maintained on a full flight, guarantees the longest autonomy for the drone.

Optimal elongation (distance)

At full throttle, 22° inclination angle (pitch) enables ANAFI USA, at full throttle, to maintain a 12 m/s horizontal speed. This speed, maintained on a full flight, enables the drone to cover the longest distance, on a single battery.

© 2026 Parrot Drones SAS. All Rights Reserved.

Wi-Fi link optimization

ANAFI USA's ecosystem is designed to optimize, in real time, the Wi-Fi communications between the Skycontroller 4 and ANAFI USA. By default, the ecosystem automatically selects the most efficient Wi-Fi channel available.

In urban environments, 5 GHz Wi-Fi channels typically suffer less interference than 2.4 GHz channels. Refer to *Network* on page 49 for more information on Wi-Fi channel management and allowing automatic switching to 5 GHz channels.

To maintain an optimal Wi-Fi link between the remote control and the drone, remember to keep a clear line of sight between them, and always direct the antennas of Skycontroller 4 toward ANAFI USA.

Several FreeFlight 6 USA alerts enable you to react before a complete loss of Wi-Fi link. If the connection breaks down, ANAFI USA automatically initiates an RTH procedure. By default, the drone flies upward to 30 m and starts flying toward its take-off position.

In most cases, this behavior enables a very fast recovery of the Wi-Fi link between the remote control and the drone, and pilots regain full control of the flight.

Refer to *Returning home: Smart RTH* on the facing page, and *Safety* on page 48 for more information on RTH configuration.

Refer to the following table for FreeFlight 6 USA Wi-Fi statuses and the corresponding icons:

The Wi-Fi link is perfect.

The Wi-Fi link is good.

The Wi-Fi link is poor.

The Wi-Fi link is about to lose connection.

⚠ **WARNING:** Never fly your drone out of your direct line of sight unless special authorization has been granted.

Returning home: Smart RTH

⚠ **WARNING:** The pilot is responsible for the drone during an RTH maneuver. The pilot must remain ready to regain control of the drone in the event of a hazardous situation.

To return ANAFI USA to its take-off position, press **RTH** on Skycontroller 4, or tap the **RTH** on your screen.

ANAFI USA rises to 30 m higher than the take-off point height and returns to hover over its take-off position.

NOTE: The default setting is 30 m over the take-off point, but you can configure the height to between 20 and 100 m through FreeFlight 6 USA. Refer to *Safety* on page 48 for more information on RTH configuration. In the event of a command-and-control link loss between ANAFI USA and Skycontroller 4, the RTH continues.

Precise Home Setting

When flight conditions are optimal at take-off, ANAFI USA can set a **PRECISE HOME** with its vertical camera. In that case, a pop-up on the screen of FreeFlight 6 USA confirms a precise home has been set, and the home icon of the minimap turns green.

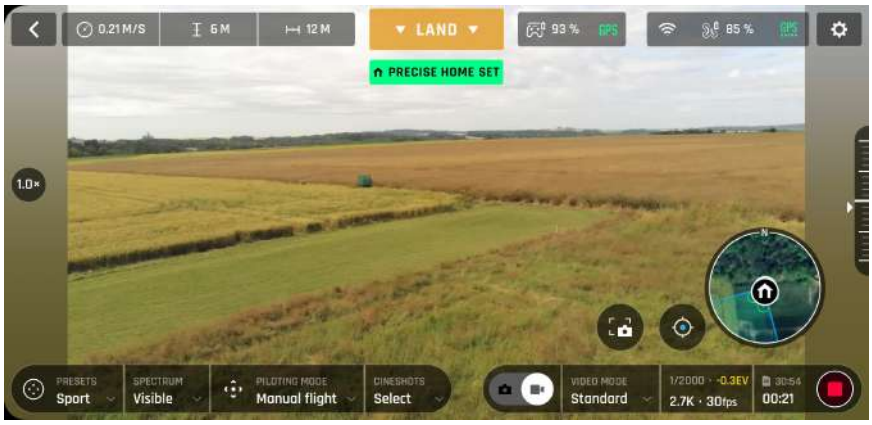

Low battery Smart RTH

ANAFI USA features a Smart RTH capability which considers its altitude and distance from its take-off point. The drone computes in real time, the battery power it requires to return home, or to the pilot, or to a custom location (Refer to *Safety* on page 48 for more information.).

When the battery charge level is low, FreeFlight 6 USA alerts you when it enters Smart RTH mode.

If you feel confident you can return ANAFI USA to its take-off point, or if you wish to land it at a different location, you can cancel the Smart RTH directly from the alert pop-up.

NOTE: This feature requires synchronization to GPS, GLONASS, or Galileo satellites.

Managing coordinates

ANAFI USA features a fly-by-coordinates function which allows you to instantly display, reuse and share any coordinates in the surroundings of your drone, or the GPS position of your drone itself. This is especially useful to precisely locate any point of interest or person ANAFI USA has detected.

This section explains how to access coordinates on the FreeFlight 6 USA app map, in flight or to prepare a flight. By default, coordinates are displayed on the FreeFlight 6 USA app map. They can be set as:

© 2026 Parrot Drones SAS. All Rights Reserved.

- latitude and longitude (LATLNG: default value)
- MGRS (Military Grid Reference System: NATO's geocoordinate standard)
- UTM (Universal Transverse Mercator)
- DMS (degree, minute, second – of arc)

Refer to *[1] Coordinates systems* on page 48 for more information on selecting a coordinates system.

In the following example, the coordinates system is set as DMS. The drone is offline, and the device is connected to local Wi-Fi.

Tap **TRY** from the FreeFlight 6 USA homescreen.

If your device is not connected to the Skycontroller 4, the drone controls appear on the screen.

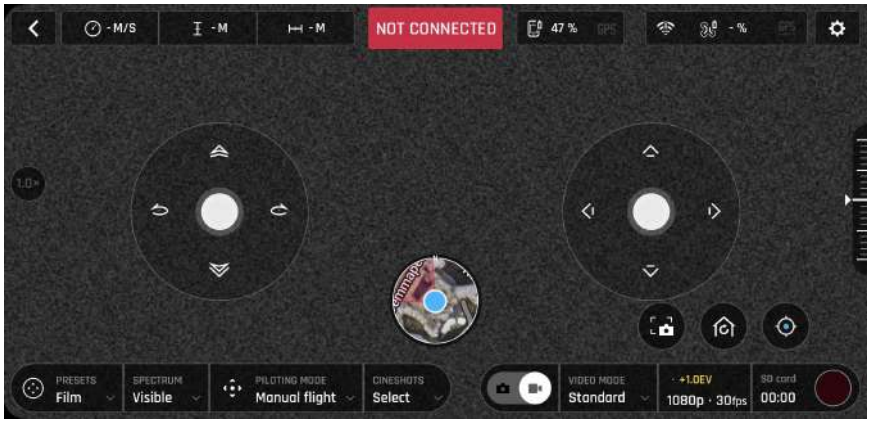

Tap the minimap on the bottom center of the offline interface to access the full screen map.

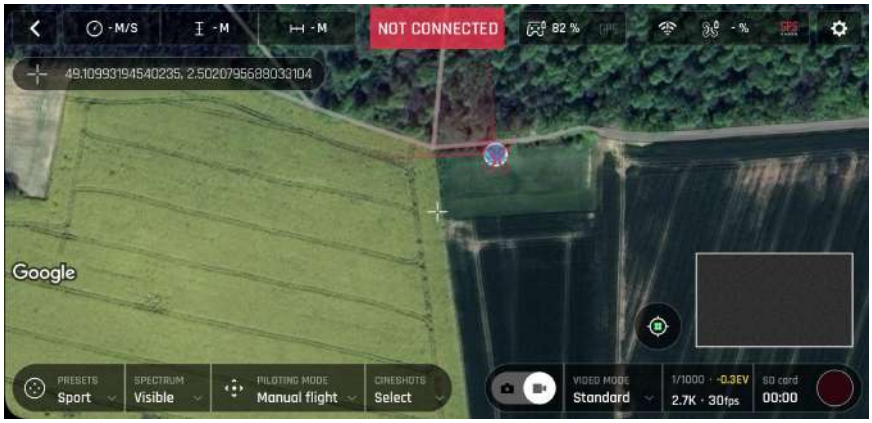

By default, "Reticle" (crosshair at the center of the screen) coordinates are displayed on the top left of the screen.

Move the map around and zoom in to pinpoint any spot, then tap the coordinates box to activate coordinates options.

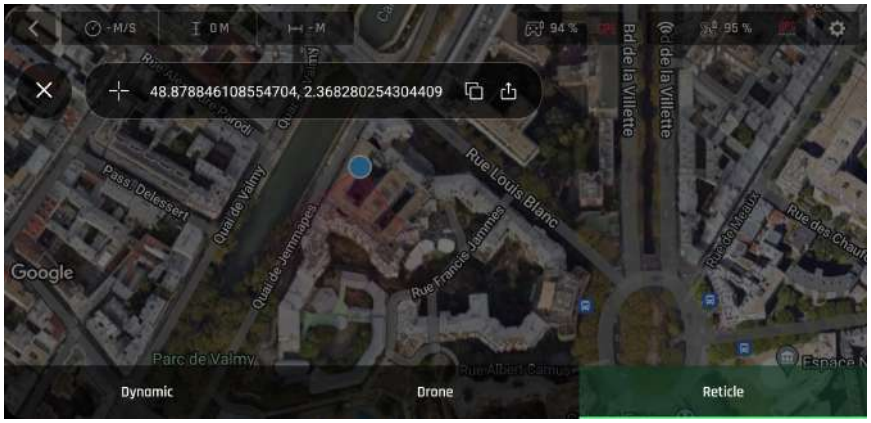

Tap **Copy** to copy coordinates to clipboard – and reuse as custom RTH point, for instance. Note the faint **Copied to clipboard** notification on the latest screen capture. Notification position and format differ from one device operating system to another.

Tap an option at the bottom of the screen to select:	
Reticle (default)	displays center of the map coordinates
Drone	displays drone coordinates (when online), or last known position (when offline)
Dynamic	displays drone, POI or WP coordinates (autonomous or assisted flights only*)

**Refer to Flight Plan on page 76 for more information.*

Tap **Share** from coordinates options to open your device's sharing options, like on the screenshot.

Tap **Close** to exit coordinate options and return to the full screen map.

Advanced RTH settings

The custom RTH option relies on managing coordinates, described in the previous section.

Activate advanced RTH settings through the **Safety Preferences** of FreeFlight 6 USA (Refer to *Safety* on page 48 for more information).

There are two advanced RTH options: **Pilot**, and **Custom**.

> **CAUTION:** By activating advanced RTH features, the drone might not be able to reach its destination in case of low battery, if you select return to **Pilot**, or a **Custom** position. Parrot will not be held responsible in the event that the drone lands in a different location.

Pilot RTH

When you select **Pilot** advanced RTH mode, ANAFI USA returns to the GPS position of the Skycontroller 4 at the exact moment an RTH procedure is activated, or to the last known coordinates of the controller, in case it has lost GPS synchronization.

Parrot recommends that ANAFI USA pilots remain in the same location, after activating an RTH procedure, when in **Pilot** advanced RTH mode.

Custom RTH

When you activate the **Custom** advanced RTH option, set up ANAFI USA for a flight and it has a GPS synchronization, the current position of the drone appears in the "Custom point" field by default.

There are two ways to change this custom point:

© 2026 Parrot Drones SAS. All Rights Reserved.

- Paste the coordinates you copied from the FreeFlight 6 USA map – refer to the earlier section of this guide.
- If you set up your drone for a flight, apply the following simple procedure to move the **Home** icon directly on the map of FreeFlight 6 USA.

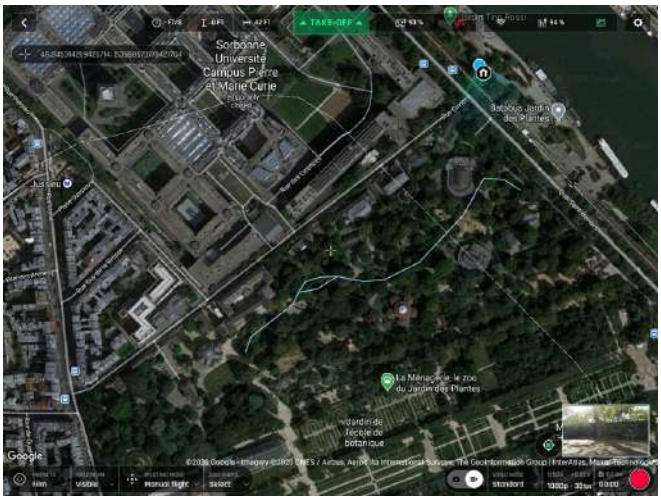

The **Home** icon appears close to the drone icon, or exactly over the drone icon if the 1st GPS fix at power up was excellent, like in our example. The blue dot shows the position of the controller which is typically the pilot.

Tap the **Home** icon to activate it, then drag and drop it to your desired RTH point.

In our example, we set up for a flight at a corner of a park, and planned an RTH over an open area, close to the center of the same park.

Access **Preferences/Safety** again and note the Custom point coordinates have been updated.

© 2026 Parrot Drones SAS. All Rights Reserved.

Landing

Fly ANAFI USA directly over a flat, even, and clear surface, then press **Take-off/Land**, or tap the orange **LAND** box on the screen.

The orange **LAND** box changes to **LANDING**. ANAFI USA lands.

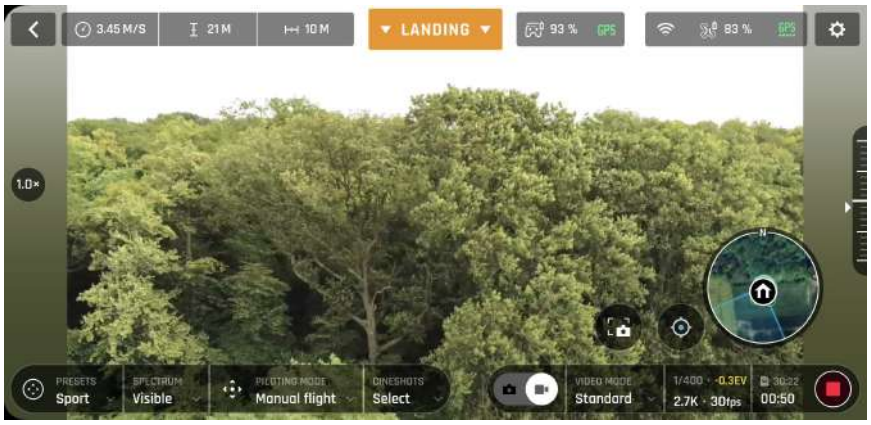

Hand landing

A hand landing procedure is more dangerous than a ground landing. Be especially careful with the hand land feature. It requires complete focus. Do not become distracted and stay aware of your surroundings.

> ⚠ **WARNING:** DANGEROUS MANEUVER. RISK OF BODILY INJURY AND DAMAGE TO THE DRONE IN CASE INSTRUCTIONS ARE NOT FOLLOWED. LACERATION HAZARD. Do not touch the propeller blades during flight. Propeller blades can cause deep cuts if your fingers, or other body parts, come into contact with them. Keep the drone as far away from your face as possible. Always wear a sturdy glove when recovering ANAFI USA for safety. Only attempt a hand landing on a stable surface, with no obstacles in the immediate vicinity. PARROT STRONGLY RECOMMENDS THAT YOU DO NOT PERFORM A HAND LANDING PROCEDURE INDOORS, DUE TO LOW STABILITY, AND INCREASED RISK.

Do not attempt a hand landing in wind strong enough to make the drone fight to hold its hovering position.

Drone GPS synchronization is mandatory for a successful hand landing.

> **TIP:** Parrot recommends that 2 people perform the hand landing procedure: 1 pilot to perform the landing procedure on Skycontroller 4, and 1 drone recovery operator to recover ANAFI USA.

Pay attention to the wind direction and speed. Do not face the wind. Keep yourself at a safe distance from the drone considering the possibility of drifting with the wind.

To perform a hand landing:

1. Fly ANAFI USA at least 50 cm directly over the recovery operator's open hand.
2. Press **Take-off/Land** or tap the orange **LAND** box on the screen.

When the drone is within the recovery operator’s reach:

3. The recovery operator raises their open hand, palm upward, and grabs the battery of the drone, from the bottom, under the drone's arms, between the thumb and the four other fingers.
4. The recovery operator performs a wrist rotation, and slowly but firmly turns the drone upside-down, taking care not to damage the gimbal.

ANAFI USA's motors cut instantaneously.

NOTE: The recovery operator must not lower their hand during hand landing to soften the landing procedure. Doing so may cause ANAFI USA not to recognize the recovery operators hand.

Only perform a hand landing procedure when there is no other landing alternative.

CAUTION: In environments with sand, use hand landing, instead of ground landing to prevent sand from penetrating the motors.

Recovery from a moving vehicle

WARNING: DANGEROUS MANEUVER. RISK OF BODILY INJURY AND DAMAGE TO THE DRONE IN CASE INSTRUCTIONS ARE NOT FOLLOWED. LACERATION HAZARD. Do not touch the propeller blades during flight. Propeller blades can cause deep cuts if your fingers, or other body parts, come into contact with them. Keep the drone as far away from your face as possible. Be especially careful when you recover ANAFI USA from a moving vehicle. It requires complete focus. Do not allow yourself to become distracted and stay aware of your surroundings. Always wear a sturdy glove when recovering ANAFI USA for safety.

IMPORTANT: Recovery from a moving vehicle requires 3 people: 1 driver to drive the vehicle, 1 pilot to perform the landing procedure on Skycontroller 4, and 1 drone recovery operator to recover ANAFI USA.

Before performing a drone recovery:

1. The vehicle driver must reduce and stabilize the vehicle's speed as much as possible.
2. The pilot must present the rear of ANAFI USA on the side of the vehicle where the recovery operator is waiting for it.
3. The drone pilot must synchronize the lateral speed of the drone with that of the vehicle.
4. The drone pilot must synchronize the altitude of the drone with the recovery operator's hand.

When the drone is within the drone recovery operator's reach:

5. The recovery operator raises their open hand, palm upward, and grabs the battery of the drone, from the bottom, under the drone's arms, between the thumb and the four other fingers.
6. The operator performs a wrist rotation, and slowly but firmly turns the drone upside-down, taking care not to damage the gimbal.

ANAFI USA's motors cut instantaneously.

© 2026 Parrot Drones SAS. All Rights Reserved.

Preferences

Tap **Settings** on the top right of the homepage, or the HUD, to access **PREFERENCES**. Preferences enable you to fine-tune ANAFI USA to customize it to your piloting and filming styles. Access Preferences submenus from the tiles on the left of the screen. Default values (DV) are marked in bold characters.

Controls

The **Controls** preferences define how Skycontroller 4 behaves, and enables the Hand-launch option. Tap an item option to select it. When you select an option, the icon turns from white to green.

Controls PREFERENCES			
	Control Mode		**CLASSIC** / ARCADE (only available in flight)
	Options:		
		Inverse joys	**OFF** / ON
		Special	**OFF** / ON
		EV Trigger	**OFF** / ON
	Hand-launch		NO / **YES**

NOTE: The **EV Trigger** allows the pilot to control the exposure value directly from Skycontroller 4's zoom trigger. With this setting, manually modify the EV from -3.0 to +3.0 by increments of 0.3. This automatically impacts the camera's shutter speed (**s** value).

Tap **RESET ALL CONTROL PREFERENCES** to reset **Controls** preferences to the default values.

Presets

The **Presets** preferences allow you to adapt ANAFI USA's flight behavior for the 4 modes; FILM, SPORT, **CINEMATIC,** and **RACING.**

Presets PREFERENCES			
	Global reactivity		1% - 100% (**FILM**, & **SPORT** - **100%**; **CINEMATIC** - **15%**; **RACING** - **30%**)
	Gimbal:		
		Horizon	FIXED / DYNAMIC (**FILM**, & **SPORT - FIXED**; **CINEMATIC**, & **RACING** - **DYNAMIC**)
		Camera tilt speed	1°/s - 180°/s (**FILM**, **SPORT**, & **RACING** - **20°/s**; **CINEMATIC** - **10°/s**)
	Flight:		
		Banked turn	NO / YES (**FILM**, **CINEMATIC**, & **RACING** - **YES**; **SPORT** - **NO**)
		Inclination	1°/s - 40°/s (**FILM** - **7°/s**; **SPORT**, & **CINEMATIC** - **20°/s**, **RACING** - **25°/s**)
		Vertical speed	0.1m/s - 4m/s (**FILM** - **1.4m/s**; **SPORT** - **4m/s**; **CINEMATIC** - **2.4m/s**; **RACING** - **3m/s**)
		Rotation speed	3°/s - 200°/s (**FILM**, & **RACING** - **40°/s**; **SPORT** - **80°/s**; **CINEMATIC** - **20°/s**)

NOTE: Tap Info for more information about **Horizon** and **Banked turn**.

> **CAUTION: Global reactivity**, **Inclination**, **Vertical speed** and **Rotation speed** values have the biggest impact on ANAFI USA's acceleration and general flying behavior. Corresponding sliders turn to orange instead of green to warn users the settings they have selected require extreme care, superior piloting skills, or both, when flying ANAFI USA. Your drone is always very responsive, but with extreme settings, it accelerates much more rapidly.

Tap **RESET ALL PRESETS PREFERENCES** to reset **Presets** preferences to the default values.

Thermal

The **Thermal** preferences defines specific thermography settings.

Thermal PREFERENCES		
	Color gradient	**Fusion** / Rainbow / White Hot / Black Hot
	Thermal post-processing	NO / **YES**
	Thermal sensor calibration	**AUTO** / MANUAL
	Temperature range	**DEFAULT** / VERY HIGH TEMPERATURES

Thermal post-processing

Tap **Info** for more information about **Thermal post-processing**. Parrot recommends **NO** for real time operations, and **YES** for post flight analysis operations.

Thermal calibration

AUTO mode is recommended for most users. If you select the **MANUAL** mode, the application periodically reminds you to calibrate your thermal camera, through the dedicated button of your HUD.

Tap **RESET ALL THERMAL SETTINGS** to reset **Thermal** preferences to the default values. This button also resets thermal Spot and Absolute scales to default values, and visible and thermal images blending.

Interface

The **Interface** preferences define the information which appears on the FreeFlight 6 USA HUD.

Interface PREFERENCES		
	Interface	**FULL** / LIGHT
	Show minimap	NEVER / WITH CONTROLLER / **ALWAYS**
	Display GPS position	**YES** / NO
	Coordinates system [1]	**LATLNG** / MGRS / UTM / DMS
	Time zone	**SYSTEM TIME** / UTC
	Map type	ROADMAP / SATELLITE / **HYBRID**
	Map Engine [2]	**GOOGLE MAP** / MAPLIBRE
	Show framing grid	**NO** / 3 x 3 / 6 x 6
	Measurement system	**AUTO** / IMPERIAL / METRIC
	FPV Goggles	Parrot – CockpitGlasses 1 Parrot – CockpitGlasses 2 **Parrot – CockpitGlasses 3** Google – DayDream View Homido V2 Homido Prime Homido Merge VR BNext Skillkorp VR5 Zeiss VR One

© 2026 Parrot Drones SAS. All Rights Reserved.

Tap **TEST** to verify the rendering of your **FPV Goggles** selection.

[1] **Coordinates systems**		
	LATLNG	latitude and longitude
	MGRS	Military Grid Reference System (NATO's geocoordinate standard)
	UTM	Universal Transverse Mercator
	DMS (or D°M'S")	degree, minute, second (of arc)

[2] The ability to change the **Map Engine** is not available on iOS.

3 x 3 framing grid

The **3 x 3** framing grid facilitates building entries, through doors or windows.

Tap **RESET ALL INTERFACE PREFERENCES** to reset **Interface** preferences to the default values.

Safety

The **Safety** preferences allows the pilot to create a safe and clear flying area for ANAFI USA.

When the **Geocage** is activated, ANAFI USA automatically stops when it reaches the maximum height or the maximum distance you select. A red prompt also appears on your HUD.

Safety PREFERENCES			
	Geocage		NO / **YES**
		Max height	1m to 150m (DV: **30m**)
		Max distance	10m to 4 km (DV: **300m**)
	Minimum height when using RTH		20m to 100m (DV: **30m**)
	End behavior		**HOVERING** / LANDING
	Hovering height		1m to 10 m (DV: **2m**)
	Advanced RTH settings		**NO** / YES
		Return position	**TAKE-OFF** / PILOT / CUSTOM

> **NOTE:** By activating advanced RTH features, if you select return to **Pilot** or **Custom** position, the drone might not be able to reach its destination in case of low battery. Parrot will not be held responsible in case the drone lands in a different location.

End behavior and hovering height

Parrot recommends ending RTH sequences by hovering (default value) as it enables the pilot to control the end of the flight. However, for missions at sea, Parrot recommends you modify the hovering altitude over 2 m (default value). Up to 2 m, at the end of the RTH, the drone computes its height over the ground, with its ultrasonic sensor. Above 2 m, it computes its height over its take-off point, with its barometer.

For example:

if the drone takes off from the deck of a ship, 40 m above sea level, and is set with a specific hovering altitude, the drone's behavior during an RTH varies as follows:

- If the hovering altitude is set at 2 m, at the end of the RTH, the drone looks for the ground and may stop 2 m above the surface of the sea.
- If the hovering altitude is set at 3 m, the drone stops at 43 m (40 + 3) above the surface of the sea.

Tap **RESET ALL SAFETY PREFERENCES** to reset **Safety** preferences to the default values.

Camera

The **Camera** preferences allows the pilot to select camera options, both in photo and video modes.

Camera PREFERENCES		
	Camera calibration – Tap **CALIBRATE**	**Correct horizon**, **Gimbal calibration** and **Camera's alignment**
	Auto record from take-off	NO / **YES** (video only)
	Lossless zoom only	**NO** / YES
	Display overexposure	**NO** / YES
	Anti-flickering	**AUTO** / 50Hz / 60Hz / OFF

Correct horizon and camera's alignment

Only resort to the **Correct horizon** and the **Camera's alignment** procedures if you notice your videos and photos are systematically tilted on the same side or if your visible and thermal cameras are misaligned. Refer to for more information about the detailed procedure.

Display overexposure

When this setting is activated, FreeFlight 6 USA's HUD shows all overexposed areas of the screen as hatched, which enables you to fine-tune your framing, your EV settings, or both.

Anti-Flickering

This setting and the associated technology attempts to eliminate the flicker effect which may arise due to some artificial lights. The **AUTO** option works for most users, but depending on the country, try other settings if the flicker effect on the device’s screen persists, or persists in artificial light videos, or both.

Tap **RESET ALL CAMERA PREFERENCES AND SETTINGS** to reset **Camera** preferences to the default values.

Network

Change ANAFI USA’s Wi-Fi network name, password, and band via the **Network** preferences.

Network PREFERENCES		
	Broadcast DRI	**OFF** / ON
	Network name	Tap the field to change your ANAFI USA’s network name. Tap **PASSWORD** to enter the password.
	Wi-Fi band	**AUTO** / MANUAL

Tap **PASSWORD** to define the Wi-Fi key shared by ANAFI USA and the Skycontroller 4. Parrot defines a unique random password for each ANAFI USA and Skycontroller 4 package, but Parrot highly recommends you define your own password.

Your ecosystem and data security depend on the security of this password. Your password must:

- be at least 10 characters long,
- Include uppercase characters
- Include lowercase characters,
- Include numbers,
- Include special characters.

Direct Remote Identification (DRI)

The DRI system makes your drone locally broadcast information about itself for regulatory compliance (where applicable). Tap **Learn more** for more information.

© 2026 Parrot Drones SAS. All Rights Reserved.

Manual Wi-Fi band setting

Tap the **MANUAL** tile in **Wi-Fi band**, then tap a free band to select it.

In urban environments, 5 GHz Wi-Fi channels typically suffer less interference than 2.4 GHz channels. The table below shows the recommended Wi-Fi channels depending on geographical zone.

Geographical Zone	Recommended Wi-Fi channels in urban environment	Recommended Wi-Fi channels in non-urban environment
Australia	149 - 165	1 - 11
Canada	149 - 165	1 - 11
Europe	149 - 165	1 - 11
Japan	1 - 11	1 - 11
Singapore	1 - 11	1 - 11
South Africa	1 - 11	1 - 11
South Korea	149 - 165	1 - 11
Taiwan	149 - 165	1 - 11
United Kingdom	149 - 165	1 - 11
Ukraine	149 - 165	1 - 11
United Arab Emirates	149 - 165	1 - 11
United States	149 - 165, (36 - 48 less power)	1 - 11, 149 - 165

To enable the automatic optimization of Wi-Fi communications on the 5 GHz channels, manually select a 5 GHz channel, then revert the Wi-Fi band setting to **AUTO**.

Videos, photos, and panoramas

ANAFI USA is equipped with a 3-axis-stabilized camera, which is capable of motion and still pictures, through two 1/2.4'' CMOS 21 MP sensors. The lens of the camera includes low dispersion aspherical elements, that reduce chromatic aberrations and flare. FreeFlight 6 USA has multiple configurable settings, from full auto to manual professional options.

> **TIP:** You can film and take pictures using your device as ANAFI USA's controller. However, Parrot recommends that you use the Skycontroller 4 and your device, for the best flight experience.

Video mode

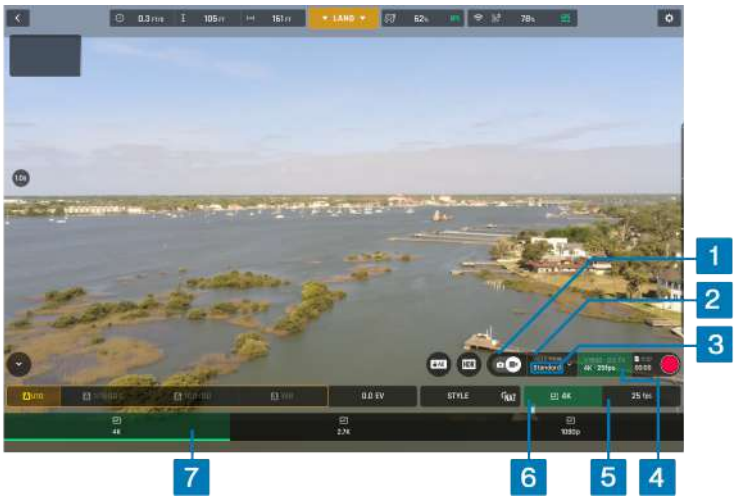

To access ANAFI USA's video options:

1. Tap the **photo/video** toggle in the HUD, to circle the film camera (right icon) in white
2. Tap the **VIDEO MODE** box (mode menu not shown on the screenshot).
3. Tap a video mode to select it (**Standard** mode is selected on the screenshot)
4. Tap the **video settings** box to open the video settings.
5. Tap the **Framerate** box to select the value (25 fps in screenshot)
6. Tap the **Resolution** box
7. Select **4K**, **2.7K**, **or 1080p** from the **Resolution menu** (4k resolution in screenshot).
8. Tap the **video settings** box again to close the sub-boxes and confirm your choices.

Available video resolutions and fps values depend on the video mode you select:

Standard	**1080p, 2.7K, or 4K** filming, at **24 fps**, **25 fps,** or **30 fps**.
Cinema	**4K** filming, at **24 fps**.
Hyperlapse	**1080p, 2.7K**, or **4K** time-lapse video with a configurable speed factor (**x15**, **x30**, **x60**, **x120**, **x240**) at **24 fps**, **25 fps,** or **30 fps**.
Slow-Motion: 1080p	filming at **48 fps**, **50 fps,** or **60 fps**, automatically slowed down by a factor of 2 (**x0.5**) at **24 fps**, **25 fps**, or **30 fps**.
Slow-Motion: 720p	filming at **96 fps**, **100 fps**, or **120 fps**, automatically slowed down by a factor of 4 (**x0.25**) at **24 fps**, **25 fps**, or **30 fps**.
High-Framerate	**720p** filming at **96 fps, 100 fps**, or **120 fps**, or **1080p** filming at **48 fps**, **50 fps,** or **60 fps** (ideal for post-processing).

Press the Skycontroller 4's **Media recording** button (or tap the HUD's **Soft shutter** button) to start filming.

© 2026 Parrot Drones SAS. All Rights Reserved.

The HUD **Soft shutter** button animates and displays a cycle between a red square and red circle. The timer starts running.

Press the ● **Media recording** button (or tap the **Soft shutter** button) again to end the recording. The HUD's **Soft shutter** button returns to steady red, and round. The timer resets.

Photo mode

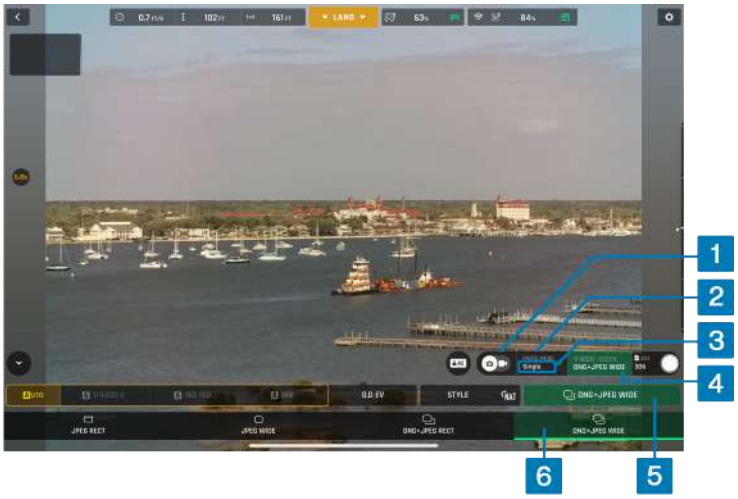

To access ANAFI USA's photo options:

1. Tap the **photo/video** toggle in the HUD, to circle the photo camera (left icon) in white
2. Tap the **PHOTO MODE** box.
3. Tap a photo mode from the corresponding box in the HUD (mode menu is not shown on the screenshot, ☐ **Single** mode is selected).

7 photo modes are available on ANAFI USA, the following table describes the available photo formats:

☐ **Single**	JPEG RECT, JPEG WIDE, DNG+JPEG (RECT or WIDE)
Timer	JPEG RECT, JPEG WIDE, DNG+JPEG (RECT or WIDE)
Burst	JPEG RECT, JPEG WIDE
Bracketing	JPEG RECT, JPEG WIDE, DNG+JPEG (RECT or WIDE)
Panorama	JPEG RECT only
Timelapse	JPEG RECT, JPEG WIDE, DNG+JPEG (RECT or WIDE)
GPS Lapse	JPEG RECT, JPEG WIDE, DNG+JPEG (RECT or WIDE)

NOTE: The HDR option is only available for 12MP JPEG photos.

4. Tap the **Photo settings** box to open the photo settings.
5. Tap the **Photo formats** box to select one of the following photo formats:

☐ **JPEG RECT**	4:3 aspect ratio, up to 16 MP, 75.5° HFOV (*Horizontal Field Of View*)
JPEG WIDE	4:3 aspect ratio, 21 MP, up to 84.0° HFOV - zoom is disabled for this format
DNG+JPEG RECT	4:3 aspect ratio, 21 MP, up to 84.0° HFOV - zoom is disabled for this format
DNG+JPEG WIDE	4:3 aspect ratio, 21 MP, up to 84.0° HFOV - zoom is disabled for this format

6. Tap a format (**JPEG RECT**, or **JPEG WIDE** if available, or any **DNG+JPEG** if available) to select it.
7. Tap the **PHOTO MODE** box again to close the sub-boxes and confirm your choice.

> **NOTE:** The **DNG+JPEG** option produces at least 2 files: 1 DNG (Digital NeGative) and 1 JPEG, for each shutter action. DNG is a RAW format. RAW formats retain all the information gathered by photography sensors, contrary to JPEG formats which are compressed and processed renderings of this comprehensive information. As a result, RAW pictures such as DNG images are heavy files, but they provide the best post-processing and retouching possibilities.

When you select a photo mode, the HUD **Soft shutter** button appears as a full grey (ANAFI USA landed) or white (ANAFI USA flying) circle.

Single mode has no options. It takes 1 photo each time you press the shutter. The HUD **Soft shutter** button appears as a full white circle. The screen flashes black and white to confirm a picture has been taken. The number to the left of the HUD **Soft shutter** button (the number of media on the microSD card) increases by 1.

Timer mode has 3 options: **3s**, **5s**, and **10s**. When you select an option, the HUD **Soft shutter** button displays either **3s**, **5s**, or **10s** depending on the option. The countdown is displayed at the center of the HUD, and on the **Soft shutter** button. The screen flashes black and white to confirm a picture has been taken. The **Soft shutter** button timer resets. The microSD card saved media number increases by 1.

Burst mode has no options. The HUD **Soft shutter** button displays the burst icon inside a white circle. The screen flashes black and white to confirm 14 pictures have been taken in the span of 1 second. The microSD card saved media number increases by 14.

Bracketing mode has 3 options: **3 photos** (-1 EV, +0.0 EV, +1 EV), **5 photos** (-2 EV to +2 EV) and **7 photos** (-3 EV to +3 EV). When you select an option, the HUD **Soft shutter** button displays the bracketing icon inside a white circle. The screen flashes black and white to confirm 3, 5 or 7 pictures have been taken. The microSD card saved media number increases by 3, 5 or 7, depending on the option.

Panorama mode has 3 options: **Vertical**, **Horizontal**, and **360**. When you select an option, the HUD **Soft shutter** button displays the corresponding icon inside. Refer to *Panoramas* below for more information.

Timelapse mode has 6 options: **5s**, **10s**, **15s**, **30s**, **60s**, and **120s**. When you select an option, the HUD **Soft shutter** button displays the timelapse icon. The screen flashes black and white to confirm a picture has been taken. The drone continues to take photos every 5 to 120 seconds, depending on the option, until you press the shutter button again to stop the timelapse. Between each shutter action, a green progress bar, at the bottom of the screen, serves as a countdown. At the end of the timelapse, the microSD card saved media number reflects the total number of medias on the drone's microSD card.

GPS Lapse has 6 options: **5 m**, **10 m**, **20 m**, **50 m**, **100 m**, and **200 m**. When you select an option, the HUD **Soft shutter** button displays the GPS Lapse icon. The screen flashes black and white to confirm a picture has been taken. The drone continues to take photos when it reaches any point on a 5 to 200-meter radius around the initial photo, depending on the option, until you press the shutter button again to stop the GPS Lapse. Between each shutter action, a green progress bar, at the bottom of the HUD, lets you estimate the distance the drone must cover before the next shot. At the end of the GPS Lapse, the microSD card saved media number reflects the total number of medias on the drone's microSD card.

Panoramas

ANAFI USA panoramas are generated automatically through the FreeFlight 6 USA gallery, based on a series of pictures taken by the drone.

> **NOTE:** ANAFI USA cannot proceed with a panorama if the drone battery power is low (capturing a 360 Panorama takes ANAFI USA 90 seconds).

© 2026 Parrot Drones SAS. All Rights Reserved.

The generation of a panorama, regardless of its format, has 3 phases:

a. collecting the pictures, in flight;
b. downloading the pictures from ANAFI USA to your device;
c. stitching the pictures together to create the panorama, on in the FreeFlight 6 USA gallery.

Before shooting a panorama:

1. Ensure you are not flying lower than 10 meters (30 ft) over water.
2. Ensure no object or subject is present in a 10-meter (30 ft) radius around ANAFI USA. This optimizes the stitching process.

NOTE: ANAFI USA locks the exposure of the frame with which you start your panorama. For this reason, Parrot recommends you always frame the main subject of the intended panorama before pressing the shutter button. Refer to *Lock AE* on page 59 for more information.

To capture a panorama, tap the **Photo Mode** box, then tap the **Panorama** box in the HUD. There are 3 panorama formats:

Panorama types capture characteristics	
Vertical	ANAFI USA takes 8 photos in approximately 18 seconds
Horizontal	ANAFI USA takes 10 photos in approximately 20 seconds
360	ANAFI USA takes 42 photos in approximately 90 seconds

NOTE: The **Panorama** mode is the only photography mode which requires the drone to be flying before you activate the shutter.

Press **Media recording** on Skycontroller 4 (or tap the HUD's **Soft shutter** button) to begin the panorama capture. ANAFI USA starts taking pictures and the bottom of the HUD displays a progress bar which fills with green as the capture unfolds.

To download the panorama pictures to your device:

1. land ANAFI USA.
2. from the FreeFlight 6 USA homepage, tap the **SD CARD** tile or the **Gallery** tile to display the media saved on the microSD card.

Panoramas show their distinct icon. A green download box shows the size of the corresponding .

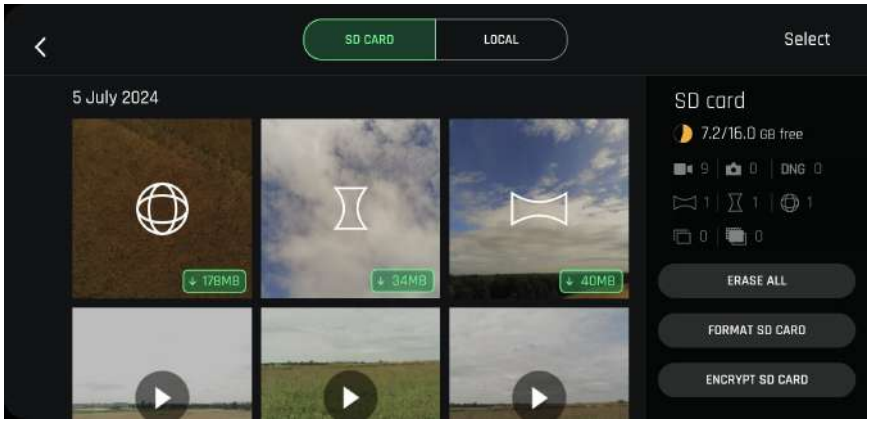

Tap the green box of the panorama you want to generate to start downloading the corresponding series of pictures to your device. When the download is complete, FreeFlight 6 USA displays a page from

where you can delete the downloaded photos. Tap **Yes**, to keep the originals on the microSD card. Tap **No** to delete them.

Tap the **LOCAL** tab to access the device gallery, which contains only the media you have downloaded from ANAFI USA's microSD card.

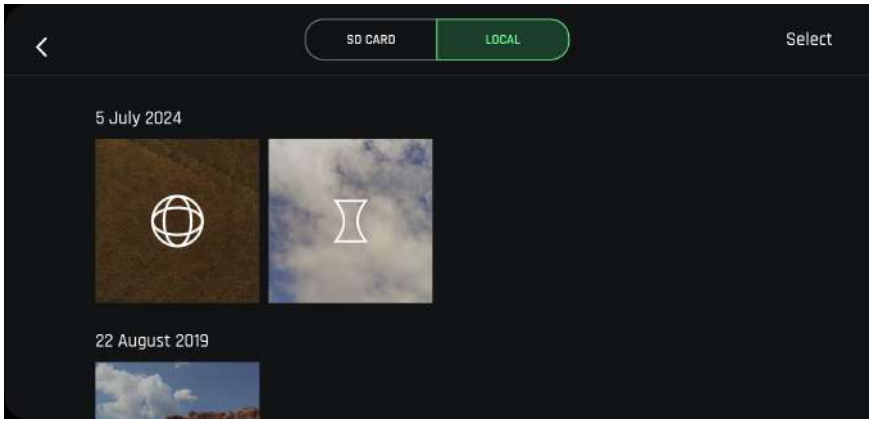

Tap a panorama from the local gallery to generate it. FreeFlight 6 USA shows the following screen.

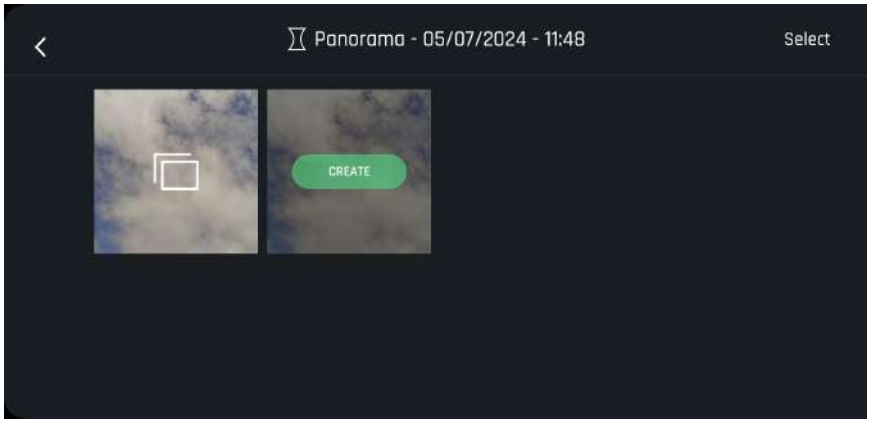

Tap **Create** to generate the panorama, or tap the other icon to access the series of individual pictures

Depending on the power of your device, FreeFlight 6 USA may display one or two resolution options:

- **Good quality** - Fast generation (18 MP)
- **Excellent quality** - Slow generation (32 MP)

Select the option you want to launch the generation.Processing time also depends on your device's power. The highest quality 360 panoramas (32 MP) take several minutes.

When the panorama creation is complete, FreeFlight 6 USA displays the panorama and gives you the option to delete the original files.

For each **Vertical** or **Horizontal** panorama capture, 1 panorama is available.

For each **360** capture, 3 different preset panoramas are available (**Sphere**, **Little Planet**, and **Tunnel**) and a potentially infinite number of custom panoramas, through the 360 editor.

The direct rendering of a custom panorama is a preview only. FreeFlight 6 USA completely reprocesses the data to minimize stitching issues and discrepancies for each custom panorama generated.

© 2026 Parrot Drones SAS. All Rights Reserved.

Gimbal tilt control

ANAFI USA features a controllable gimbal (180° tilt range, nadir to zenith). Gimbal tilt is controlled with Skycontroller 4's **Gimbal tilt** trigger (left trigger). It is available in all video and photo modes, and in all manual piloting modes.

- To aim the gimbal toward the ground, push the **Gimbal tilt** trigger down.
- To aim the gimbal toward the sky, pull the **Gimbal tilt** trigger up.
- To reset the gimbal tilt to a horizontal position, press the ⊕ **Optics reset** button.

Zoom control

ANAFI USA features a 32x zoom. Zoom is controlled with Skycontroller 4's **Zoom** trigger (right trigger). It is available in all video modes, and in **JPEG RECT** photo mode (with an impact on the final resolution of your pictures). **WIDE** photo modes imply the use and rendering of all 21 MP delivered by ANAFI USA's CMOS sensor. Zoom is deactivated in both **WIDE** photo modes.

- To zoom in on a subject, push the **Zoom** trigger down.
- To zoom out, pull the **Zoom** trigger up.
- To reset the zoom factor to 1x, press the ⊕ **Optics reset** button

ANAFI USA's HUD presents precise, decimal-by-decimal zoom information at all times, in the middle of the left-hand side of the screen.

Camera Calibration

Correct horizon (exceptional procedure)

> **NOTE:** Your ANAFI USA's camera has been factory-calibrated with high precision.

Unlike the calibration of ANAFI USA or that of the Skycontroller 4, which must be performed periodically, the camera calibration must not be performed unless it appears necessary, typically, after a crash. If you notice a tilted horizon on all your videos and photos, and if this tilt is always on the same side, access camera calibration to make your horizon perfectly straight again.

This feature is accessible from theANAFI USA box on the FreeFlight 6 USA homepage (or from the ANAFI USA box of the HUD) and from the **PREFERENCES / Camera** menu.

Before starting this procedure, you must position ANAFI USA on a flat and perfectly level surface, exactly perpendicular to any pattern containing straight lines you can use as horizon references. A set square can help you check that a line on your floor is perpendicular to your wall.

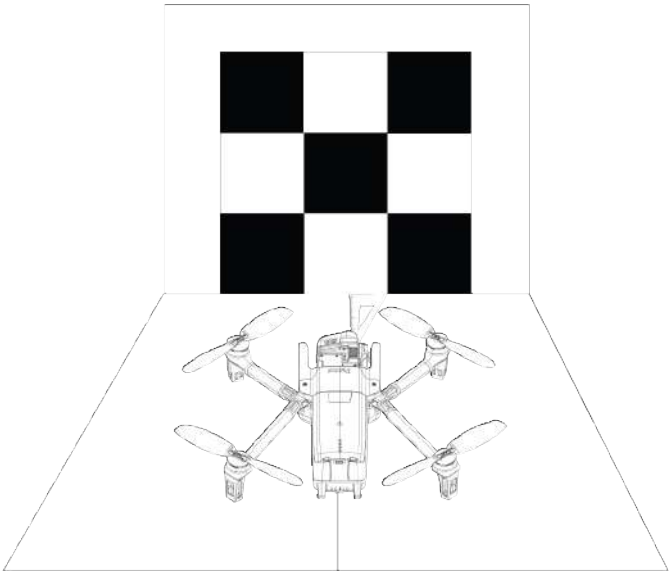

When ANAFI USA is correctly positioned, perpendicular to its straight horizon reference, press ⏻ **Power** to power it on, along with the Skycontroller 4 and your device.

Access Camera calibration from the ANAFI USA box of the homepage or the HUD of FreeFlight 6 USA, or from the **PREFERENCES / Camera** menu.

Select the **Correct horizon** option from the **Camera calibration** screen.

The **Horizon correction** screen opens, showing white horizontal lines:

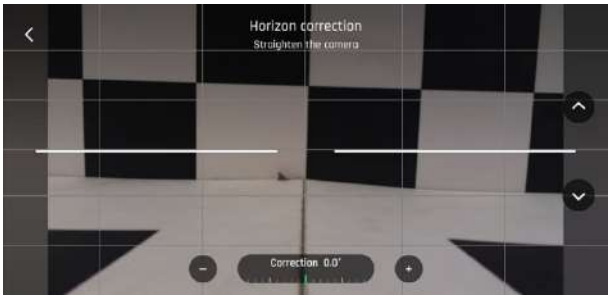

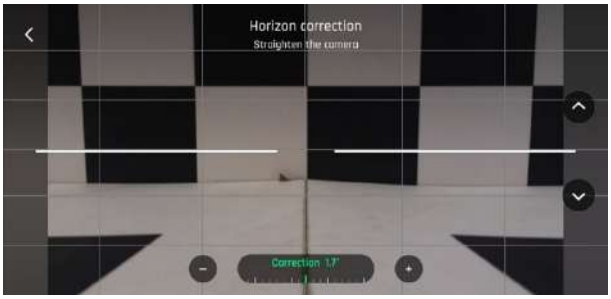

Tap **+ plus** or **- minus** until the artificial horizon of ANAFI USA matches the horizon reference facing the drone. Do not worry about vertical lines (see the images above), they do not appear straight or parallel on the gimbal calibration screen.

When you have straightened the tilt of the camera, tap the **< Back** on the top left of the screen to confirm your setting and exit camera calibration.

Gimbal calibration

Use this option to perform a gimbal calibration, similar to that which occurs after ANAFI USA is powered on.

© 2026 Parrot Drones SAS. All Rights Reserved.

> **NOTE:** FreeFlight 6 USA may require you to carry out this procedure (as it may require you to perform a drone magnetometer calibration) before allowing you to fly ANAFI USA.

Camera's alignment (exceptional procedure)

Use this option to align the images of your visible and thermal spectrum cameras.

As the interface advises, due to cameras parallax, use the farthest possible object as your alignment reference, ideally, at least 16.3 m (53.5 ft).

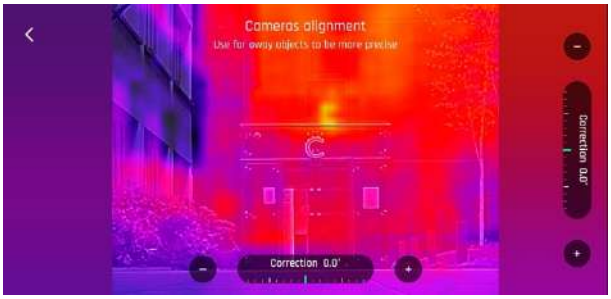

> **NOTE:** Activate the zoom (right) trigger to magnify the view of your reference.

Tap **+ Plus** or **- Minus** on each axis to align visible and thermal views.

Tap **< Back** on the top left of the screen to exit the interface and confirm your settings.

Advanced image settings

ANAFI USA is set to deliver high quality and balanced 4K videos and 21 MP photos, out of the box. However, there are multiple advanced image settings. This section is designed to help you exploit the manual settings.

To access the advanced image settings:

1. Tap the **Image settings** box in the HUD.
2. tap **AUTO** to select automatic mode, or **PRO** to select manual mode.

Additional settings boxes are unlocked:

NOTE: In **AUTO** mode, the only setting accessible is the exposure value **EV**.

PRO mode: The pilot chooses the shutter speed **s**, and the **ISO**, and the white balance **WB**.

AUTO mode: ANAFI USA chooses the shutter speed **s**, and the **ISO** value, and the white balance **WB** based on the surroundings.

Lock AE

FreeFlight 6 USA allows the pilot to lock the general exposure of a view, to fine-tune the framing of a shot and keep the desired exposure.

A **AE** icon appears, to the left of the **HDR** icon (it replaces the **HDR** icon in **DNG+JPEG** photo format, as **HDR** is not available with this setting).

Tap the **AE** icon to lock the exposure value to that of the current view. The icon turns yellow. A yellow **AE** box appears under the **Next Available Action** box, at the center of the top bar of the HUD.

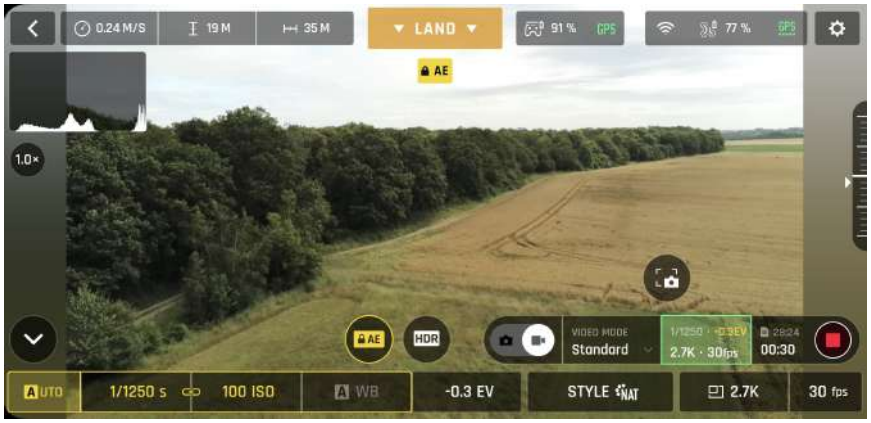

Move ANAFI USA around or tilt its gimbal to change the frame. The exposure settings remain as they were when you activated the function.

Tap the **AE** icon again to deactivate the exposure lock. The icon reverts to white, and the yellow **AE** box disappears.

Lock AE Touch

With the **AE Touch** (or **Spot AE**) function of FreeFlight 6 USA, you can also lock the exposure of a frame on any detail of any view.

© 2026 Parrot Drones SAS. All Rights Reserved.

To activate this function, follow the **AE** procedure of the preceding section. When the exposure is locked, touch the part of the frame you want to base your exposure on. A yellow square animates around this spot and the yellow **AE** box is replaced by a yellow **AE Touch** box.

HDR

HDR (high dynamic range) enhances videos or photos. The HDR option is available for **Standard** video mode **4K**, **2.7K**, and **1080p** formats (regardless of framerate values) and JPEG photos.

To activate the HDR option, select a **Standard** video mode or a **JPEG** photo format from the relevant boxes of the bottom bar of the HUD. A white and round HDR icon appears on your screen, to the left of the photo/video trigger.

Tap the **HDR** icon. It turns yellow, and an HDR notice appears in black inside a yellow box, under the **Next available action** box, at the center of the top bar of the HUD. Press the **Media recording** button on your Skycontroller (or tap the soft shutter button of the HUD) to start filming in HDR or to take an HDR photo.

Tap the round HDR icon again to deactivate HDR. The yellow HDR box disappears from the screen.

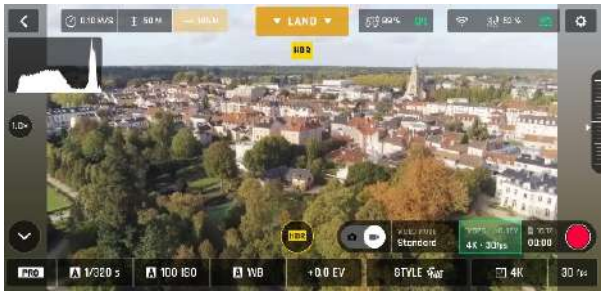

> **NOTE:** You cannot modify shutter speed **s**, **ISO** value, or **WB** values when the HDR mode is activated. However, you always keep control over your EV value. Activating (or deactivating) HDR stops any ongoing video recording.

Shutter speed (s)

The shutter speed **s** value refers to the exposure time, in fractions of a second, where the shutter stays open to capture a still picture.

In **AUTO** mode, ANAFI USA selects the best shutter speed and ISO value couple, in real time, depending on the scene and available light.

> **NOTE:** selecting a shutter speed deactivates the automatic ISO mode.

ANAFI USA's f/2.4 aperture lens lets in a lot of light, and achieves fast shutter speed values (down to 1/10,000 s) and captures very fast action. It can also be used for slow shots, up to 1/15 second for the photo mode.

> **NOTE:** ANAFI USA can shoot pictures and videos when it is not flying. Hold the drone to use it as a stabilized 4K video and photo camera.

Tap the **Shutter speed** box to open the shutter slider.

Select a value to exit **AUTO** mode for shutter speed and ISO. This action also deactivates the EV slider.

Set the desired shutter speed value, then tap the **ISO** box to select an ISO value. The HUD reflects the chosen settings. If you get lost, tap **AUTO** either on the shutter speed or the ISO slider to get back to AUTO exposure and reactivate the EV slider.

ISO value (ISO)

The ISO value refers to the sensitivity of the sensor. The ISO value is linked to the shutter speed value. Both sliders activate when you deactivate the **AUTO** mode and set a value for one, or the other. The lower the ISO value, the lower the sensitivity of the sensor, and the lower the image noise (digital grain). Therefore, under good lighting conditions, such as sunny daylight outside shots, select low ISO values (for example, between 50 or 200). Use 3200 ISO to capture low light interior scenes, or exterior shots at dusk or dawn, for example.

By default, in **AUTO** mode, ANAFI USA constantly adapts its ISO and shutter speed values to the scene it is filming. However, setting an ISO value for a whole shot or series of shots is advised for professional filming.

Tap the ISO box to open the ISO slider.

Select a value to exit the **AUTO** mode for ISO and shutter speed. This action also deactivates the EV slider.

Set the desired ISO value, then tap the shutter speed box to select a shutter value. The HUD reflects the chosen settings. If you get lost, tap **AUTO** either on the s or the ISO slider to get back to auto exposure and reactivate the EV slider.

White balance (WB)

White balance refers to the process of adjusting the colors in an image to accurately represent how they appear under different lighting conditions, particularly in relation to the color temperature of the light source. Cold lights make the whites look blue. Warm lights make the whites look yellow. By default, **Auto WB** mode ensures that white objects appear neutral white, at all times. It adapts its WB value in real time.

However, setting a WB value for an entire shot is advised for professional filming. Stable WB facilitates the grading (color treatment) of videos.

Tap the **WB** box to open the white balance options.

© 2026 Parrot Drones SAS. All Rights Reserved.

Select the **WB** option that is best suited for your shooting conditions, your subject, or both. The HUD reflects the chosen settings and helps you make the best choice.

Auto WB

Incandescent WB

Fluo WB

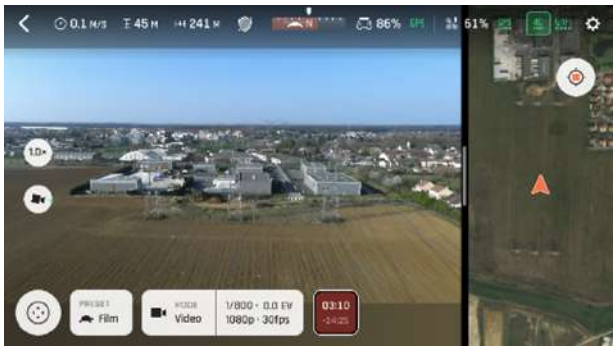

Sunny WB

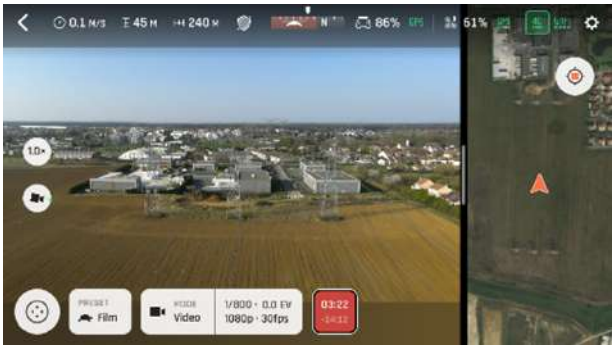

Cloudy WB

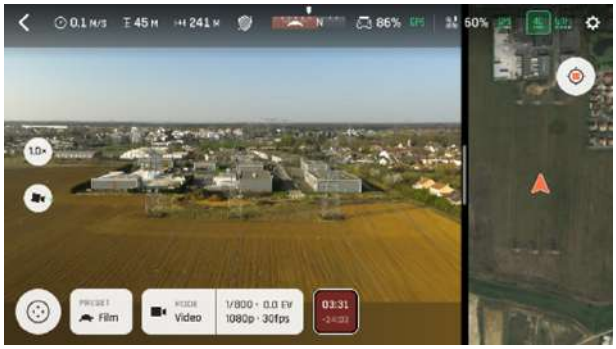

Shaded WB

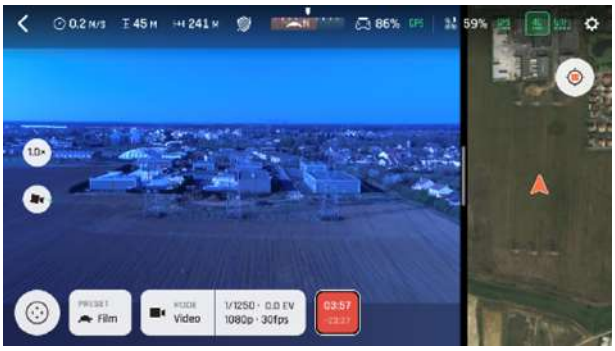

WB 2000k

WB 10000k

Exposure value (EV)

The EV expresses the general darkness or lightness of a photograph or video. At +0.0 (zero) EV, ANAFI USA automatically adapts the shutter speed and the ISO value to deliver a perfectly balanced photo or video.

Tap the **EV** box to activate the EV slider.

Move the EV slider to the left (negative) to darken the image, or to the right to lighten it (positive).

STYLE

To access the styles menu:

1. Tap the **Image settings** box
2. Tap the **STYLE** box in the advanced images settings menu
3. Tap the one of the 4 styles you want to use

NATURAL

The **NATURAL** Style is the default style. It respects nature's colors and tones.

P-LOG

P-LOG style is an alternative style to **NATURAL** style, both in video mode, and photo mode. This alternative imaging style reduces contrast and saturation. P-LOG style is ideal for videos and photos you want to edit and process using professional grading tools and filters.

INTENSE

INTENSE style is a second alternative style to **NATURAL** style both in video mode, and in photo mode. It makes images more saturated and contrasted.

PASTEL

PASTEL style is a third alternative style to **NATURAL** style both in the video mode, and in the photo mode. It makes images less saturated, but it brings out their warmest tones.

ADJUSTMENT

The **ADJUSTMENT** button, next to the **P-LOG** box, provides three additional settings for the Normal style still images and films:

Additional settings	
Saturation	sets the intensity of the colors (from -2 to +2)
Contrast	sets the degree of difference between lightest and darkest parts of the image (from -2 to +2)
Sharpness	sets the distinction of detail reproduction (from -1 to +1)

© 2026 Parrot Drones SAS. All Rights Reserved.

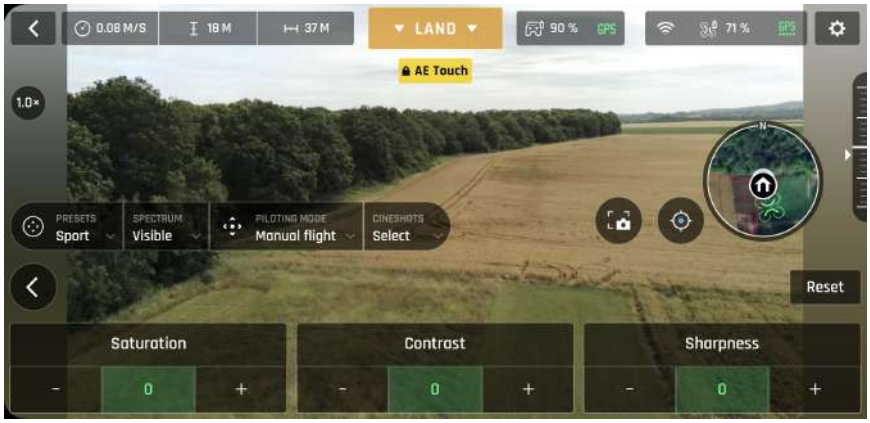

Tap the **RESET** button, on the right of the screen, to bring all values to 0 (zero).

Tap the **< back**, on the left of the screen, to confirm your settings and exit the **ADJUSTMENT** menu.

Media management

Retrieving photos and videos

1. Remove the microSD card from the drone. Refer to *Installing a microSD card* chapter on page 22 for more information.
2. Insert the microSD card into the microSD card slot on your computer.

If your computer does not have a microSD card slot, use a microSD to SD card adapter.

3. Copy the videos and photos taken with ANAFI USA to the computer hard drive to store, edit, and manage the media.

TIP: Backup all photos and videos, and clear the microSD card after each flight to free memory space for new images and images.

Direct media retrieval (drone to computer)

Alternatively, retrieve the media directly from ANAFI USA, without extracting the microSD card.

Use an enclosed USB-A to USB-C cable to connect the drone (USB-C) to a USB-A port of your computer. Press ⏻ **Power** to power on ANAFI USA.

ANAFI USA mounts as an external drive. Copy your media from the **DCIM/100MEDIA** directory to your computer's hard drive.

When you finish managing your media, click **Safely Remove Hardware** in the Windows taskbar, then click on **Eject ANAFI USA**, like any other external drive.

NOTE: When plugged in to a computer and powered on, ANAFI USA's battery discharges itself. You must recharge your smart battery after you retrieve your media, even if the battery was fully charged when you began the procedure.

FreeFlight 6 USA Gallery

Access the **Gallery** from the FreeFlight 6 USA homepage. Tap either the **microSD card** icon on the top bar of the interface, or the **Gallery** tile, at the center of the interface.

The **Gallery** has 2 tabs at the top of the interface; **SD CARD**, and **LOCAL**.

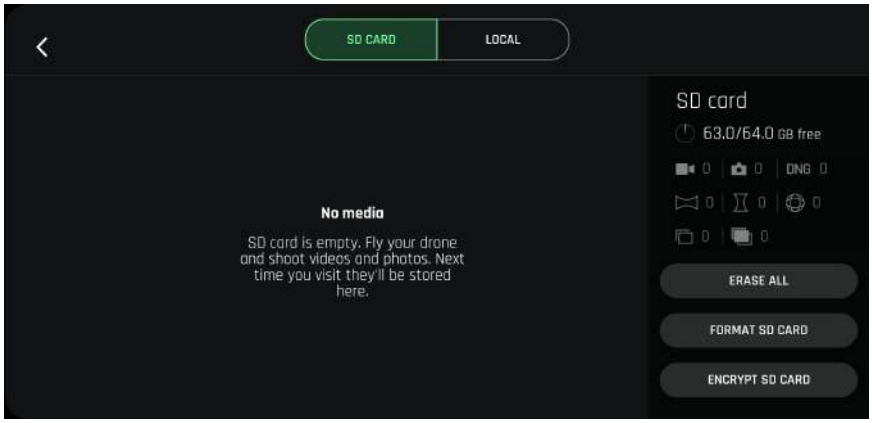

NOTE: If ANAFI USA is powered on and connected to Skycontroller 4 directly (or connected through your device), the FreeFlight 6 USA Gallery displays the microSD card media, by default.

Tap any media to preview it.

© 2026 Parrot Drones SAS. All Rights Reserved.

Tap any green media download box to transfer the corresponding media to your device.

Tap the **LOCAL** tab at the top of the interface to access any media you download to your device.

The **Gallery** also lets you:

- preview videos and photos, without downloading them to your device
- create panoramas (Refer to *Panoramas* on page 53 for more information.)
- erase all media
- format a microSD card
- encrypt a microSD card

MicroSD card formatting

To format the microSD card:

1. tap the **SD card** tab,
2. Tap **FORMAT SD CARD**
3. **Select the type of formatting** from one of the following options:

Quick formatting

Full formatting

Confirm your selection from the next screen to launch the formatting.

CAUTION: Both options delete all microSD card contents.

MicroSD card encryption

CAUTION: If you encrypt a microSD card, you also initiate the formatting process that erases all data stored on the card's memory.

To encrypt the microSD card:

1. Tap the **SD CARD** tab
2. Tap the gray **ENCRYPT SD CARD** button

The **Encryption profiles** screen opens.

3. Tap **New profile** to create a new encryption profile. Alternatively, select an existing Profile from the list.

If you create a new profile, the **Create profile** screen opens.

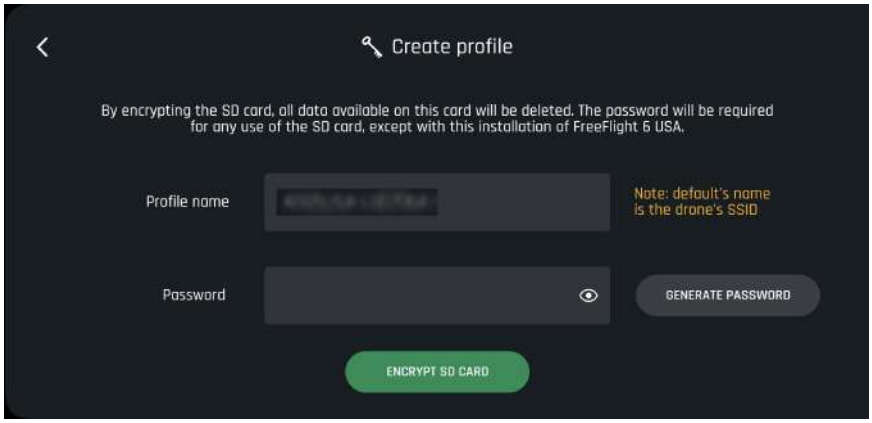

4. Type your own **Password** or tap **GENERATE PASSWORD**.
5. Tap the green **ENCRYPT SD CARD** button to launch the encryption.

The **Encryption profiles** screen opens again. A green loading circle shows that the encryption process is underway.

The encryption is successful when the **ENCRYPT SD CARD** button (in Step 3) in the **SD CARD** tab, changes to **LOCKED**.

A microSD card encrypted by ANAFI USA is unreadable without the associated Encryption profile.

The Encryption profile is held by the instance of FreeFlight 6 USA, thus by the device with which the encryption was performed.

Consequently, if a drone is destroyed, its microSD card can only be decrypted throughanother ANAFI USA drone paired to a Skycontroller associated to the device holding the instance of FreeFlight 6 USA with which the encryption was performed.

To remove the encryption from the microSD card:

1. Navigate to the FreeFlight 6 USA**Gallery**
2. Tap the **SD CARD** tab
3. Tap the **LOCKED** button

The **Encryption profiles** screen opens, and shows the **Profile list**.

4. Select the profile from which you want to remove the encryption.
5. Tap **REMOVE ENCRYPTION**

The **Remove encryption** screen opens.

6. Tap **REMOVE AND FORMAT**

The decryption is successful when the **LOCKED** button (in Step 3) in the **SD CARD** tab, changes to **ENCRYPT SD CARD**.

© 2026 Parrot Drones SAS. All Rights Reserved.

Thermal imaging

Thermal imaging, or infrared (IR) thermography, is the process of acquiring, measuring and analyzing thermal information from non-contact devices, such as ANAFI USA's FLIR Boson camera.

To access ANAFI USA's thermography mode, either tap the **THERMAL** box on FreeFlight 6 USA's homepage, or tap the **SPECTRUM** box on the HUD's lower bar and select **Thermal**.

Presentation of the Thermal HUD

The following image shows the thermal HUD in post processing:

1. Spectrum blending
2. Lock scale
3. Pause view
4. Take a screenshot
5. Thermal mode selection

**the thermometer icon indicates only the IR spectrum is displayed*

> **NOTE:** When post-processing is activated (default value), the Pause view and Lock scale buttons are available. They disappear when post-processing is deactivated (Refer to *Thermal post-processing* on page 47 for more information).

As for the Visible Spectrum, you can record both thermal photos and videos. Choose the setting with the **Photo/Video** toggle button in the lower bar of the HUD (or among additional settings, as in the Thermal HUD screen capture).

When in **Thermal Spectrum**, the choice of photo modes is limited to three options, each of which delivering 1280x720 rectilinear JPEG thermography images:

- **Single**
- **Timelapse** (10, 30, 60, 120, or 240 seconds intervals between shots)
- **GPS Lapse** (5, 10, 20, 50, 100, or 200 meters spherical intervals between shots)

The **Thermal Spectrum** video mode is limited to a single option. ANAFI USA shoots 9 frames per second 1280x720 thermography MP4 (H264) videos.

Capture screenshots, directly to Skycontroller 4, through the dedicated screen button. This feature is available when filming and enables you to extract a still image from a film without stopping the recording.

> **NOTE:** ANAFI USA is a multicamera system (two EO lenses for one visible camera, one thermographic camera). However, photo or video mode selection is independent from the cameras. In other words, for example, switching from Visible Spectrum photo mode calls the last Thermal Spectrum photo mode that was selected; similarly, switching from Thermal Spectrum video mode calls the last Visible Spectrum video mode that was selected.

Relative Thermal mode

The Relative mode is the default thermography mode of ANAFI USA, which is activated upon first access to the Thermal HUD.

Relative mode provides a quick overview of a scene's temperature range. In this mode, even slight heat differences materialize as strong contrasts.

Its main specificity is that the scale it displays, on the left of the HUD, matches by default the temperature range of the scene ANAFI USA is filming, on a 0 to 100 graduated scale.

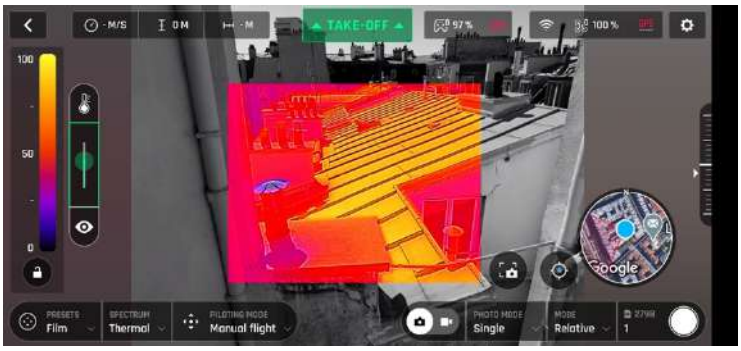

However, when the post processing is activated, the lock button enables you to temporarily lock the scale to the temperature range of any scene. This is especially useful if you must reframe your scene to include part of the sky. The sky always appears as a cold element, which disturbs the scale.

Spot Thermal mode

Spot Thermal mode of ANAFI USA isolates hot or cold.

Tap the **inverted arrows** button (under the scale, on the left of the screen) to toggle between hot and cold. Slide your finger along the scale to adapt the threshold of the scale to your scene and highlight only the coldest or hottest spots.

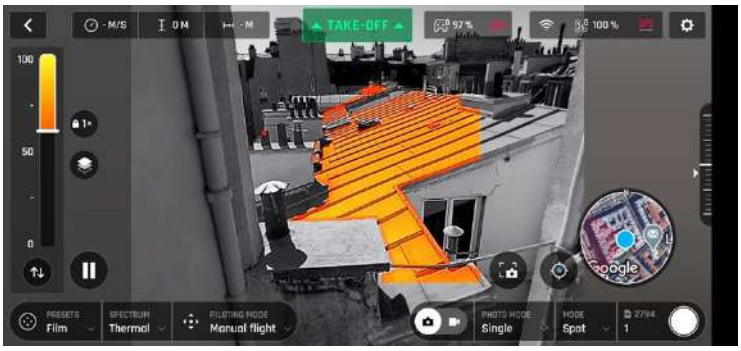

> **NOTE:** In **Spot Thermal mode**, the thresholds you set manually are only reset when you tap the **RESET THERMAL SETTINGS** button in the **Thermal Preferences** tab.

© 2026 Parrot Drones SAS. All Rights Reserved.

Thermal analyzer mode

The Thermal analyzer feature of FreeFlight 6 USA provides a quick thermal analysis, directly from your device.

This function gives you full control over the on-screen rendering of any thermography video or photo you have taken with ANAFI USA. From the analyzer, you can:

- access Thermal Preferences directly from the preview's Preferences icon, top right;
- navigate inside your thermography videos;
- modify the thermography modes (Relative, hot and cold spots) and their associated thresholds at any point of any video or on any photo;
- modify the blending between Visible and Thermal spectrums;
- save as many screenshots as you want.

However, Thermal analyzer videos cannot be saved or exported by FreeFlight 6 USA – even if most devices enable you to record your screen.

To analyze a thermography media, access your **LOCAL** FreeFlight 6 USA **Gallery** and open a thermal video preview or a photo.

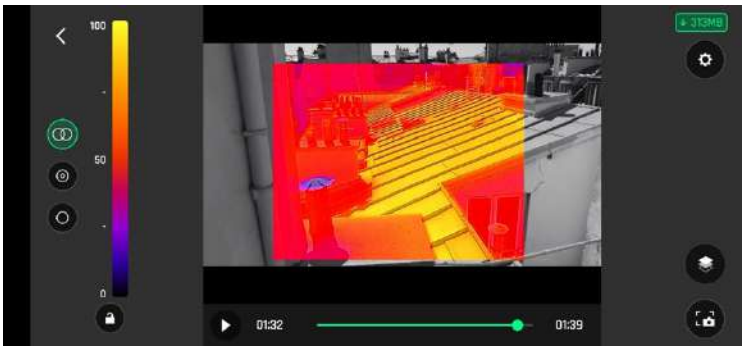

Tap the green **ANALYZE** box.

The photo displays or the video plays in Analyzer mode. The interface gives you access to most options available for filming.

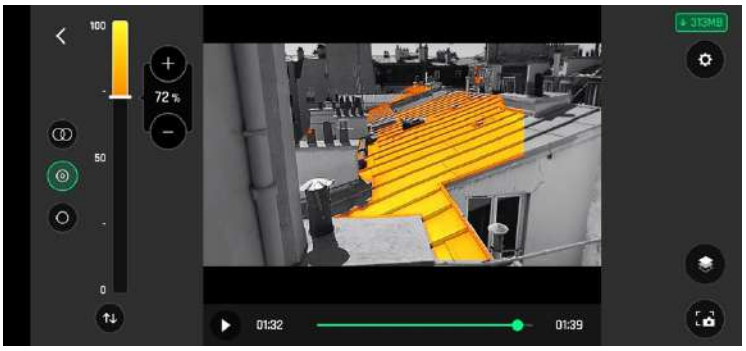

Cineshots

ANAFI USA features a series of automated shots, which enable you to capture scenes professionally.

Select the video settings you require and tap **CINESHOTS** in the bottom bar of the HUD to access cineshots.

> **NOTE:** Cineshots are available in the visible spectrum only.

Tap one of the following Cineshots to select it:

- **360°**
- **Reveal**
- **Spiral**
- **Epic**

For each cineshot, two options appear. ANAFI USA films all your cineshots automatically if you have free space on your microSD card.

> **CAUTION:** Activate and monitor all cineshots with care. Always check your automated shot flight plan is clear from obstacles and is safe, always retain visual contact with ANAFI USA, and always be ready to reclaim control of your drone.

360°

When **360°** cineshot is activated, ANAFI USA maintains its position and altitude, and rotates slowly and completely around its axis to capture a full panorama.

Tap **Right** or **Left** to select the direction you want your drone to rotate, and to activate the **360°**. After a countdown on the HUD, ANAFI USA starts its rotation. An animation flashes on your screen, and the **360°** box progressively fills with green as the cineshot unfolds.

Reveal

When **Reveal** cineshot is activated, ANAFI USA tilts its camera toward the ground and starts moving forward in a straight horizontal line. Slowly, over 30 or 60 meters, the camera gimbal tilts up, revealing the scenery in front of ANAFI USA.

Tap **30m** (small-arrow icon) or **60m** (large-arrow icon) to select the range of your reveal shot, and activate it. After a countdown on the HUD, ANAFI USA tilts its camera down and starts moving forward. An animation flashes on your screen, and the **Reveal** box progressively fills with green as the cineshot unfolds.

Spiral

When **Spiral** cineshot is activated, ANAFI USA tilts its camera to the ground and starts moving up, in a straight vertical line. Slowly, as it climbs to 30 or 60 meters, ANAFI USA carries out a full 360° rotation around its axis, then its camera tilts up progressively, panning over the scenery along a 180° rotation. ANAFI USA finishes the **Spiral** cineshot with a 180° angle, compared to its starting point.

Tap **30m** (small-arrow icon) or **60m** (large-arrow icon) to select the range of your spiral shot, and activate it. After a countdown on the HUD, ANAFI USA tilts its camera down and starts moving up and rotating. An animation flashes on your screen, and the **Spiral** box progressively fills with green as the Cineshot unfolds.

© 2026 Parrot Drones SAS. All Rights Reserved.

Epic

When **Epic** cineshot is activated, ANAFI USA moves away backward in a smooth ascending line, keeping its subject in the center of its frame for 30 or 60 meters. The **Epic** cineshot gives the best results when ANAFI USA starts from a position close to its subject.

Tap **30m** (small-arrow icon) or **60m** (large-arrow icon) to select the range of your epic shot, and activate it. After a countdown on the HUD, ANAFI USA starts moving backward and upward. An animation flashes on your screen, and the **Epic** box progressively fills with green as the Cineshot unfolds.

> **NOTE:** Any action on any stick of Skycontroller 4 immediately terminates the current cineshot.

Piloting modes

Tap the **PILOTING MODE** box in FreeFlight 6 USA's HUD to access the 7 piloting modes options:

- **Manual flight**
- **Cameraman**
- **Follow Me**
- **SmartDronies**
- **FPV**
- **Flight Plan**
- **Touch & Fly**

⚠ **WARNING:** Monitor all piloting modes with care. Always check your flight plan is safe, and the trajectory of your subject is safe and clear from obstacles (when using a tracking piloting mode). Always retain visual contact with ANAFI USA. Always be ready to stop the flight plan in case of danger or unexpected obstacles.

Manual flight

The **Manual flight** mode is ANAFI USA's default mode. It enables the user to pilot the drone and fully control its camera tilt and zoom.

When you release the commands, ANAFI USA hovers in the same position.

Cameraman

The **Cameraman** mode enables you to pilot ANAFI USA around an object or a subject and track them in the center of your frame.

You must enter a fixed horizon configuration into cameraman mode, or the mode does not lock.

1. Drag your finger across the screen to draw a blue rectangle around the object or subject you want ANAFI USA to track. Alternatively, double-tap the object or subject.

When your target is locked, the rectangle turns green and the orange **LAND** box turns to a red **STOP** box. ANAFI USA's frame centers on your target, inside the green box.

Drag the green box to the area of the frame where you want your target to remain at.

2. Fly ANAFI USA around your target.
3. Push Skycontroller 4's right joystick left (clockwise rotation) or right (counterclockwise rotation) to circle ANAFI USA around the target.

The drone keeps your target in the part of the frame you have selected.

ANAFI USA manages the gimbal tilt to keep the target in the frame. The Skycontroller 4's left trigger is deactivated in this mode. The right trigger controls the zoom.

When you release the commands, ANAFI USA hovers and rotates to continue tracking the target.

4. Tap the red **STOP** box in the HUD's top bar to stop tracking the target.

When no target is selected, or when the target tracking is stopped by the pilot, ANAFI USA's behavior is similar to that of the **Manual flight** mode.

© 2026 Parrot Drones SAS. All Rights Reserved.

Follow Me

The **Follow Me** mode enables users to have ANAFI USA follow them in action.

> ⚠ **WARNING:** Fly ANAFI USA at least 5 meters (15ft) high and 10 meters (30ft) in front of you, facing you. A red alert at on FreeFlight 6 USA's HUD informs you if you are too close to ANAFI USA, or if it is flying too low.

Upon first activation, the following screen appears:

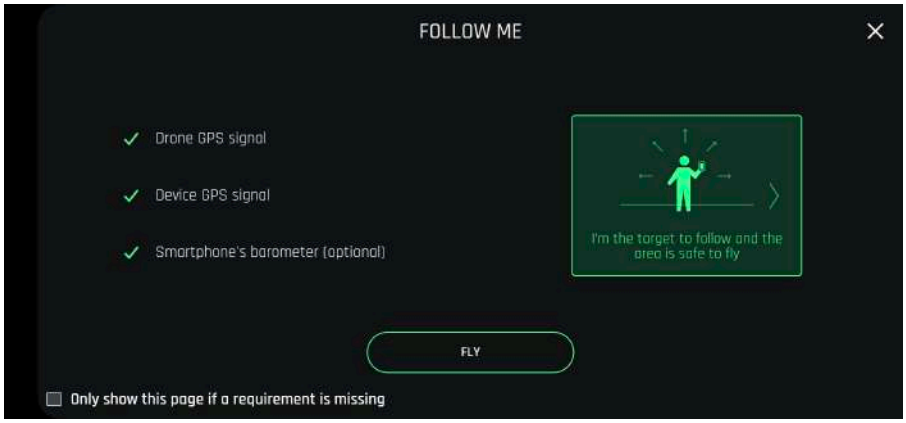

> **NOTE:** Both a drone GPS synchronization and a controller GPS synchronization are imperative to activate this mode.

1. Tick the **Only show this page if a requirement is missing** box if you do not want this warning to appear again when no prerequisite is missing.
2. Perform a drone GPS synchronization and/or a controller GPS synchronization if required.
3. Tap **FLY** to access the **Follow Me** mode.
4. Select one of the 3 **Follow Me** tracking modes (refer to in-app explanations for details):
   - **Locked**
   - **Track**
   - **Dynamic**

> **TIP:** Only use the Dynamic option in completely open and unobstructed areas.

5. Drag your finger across the screen to draw a blue rectangle around yourself. When ANAFI USA has a lock on you, the rectangle turns green and the orange **LAND** box in the HUD's top bar turns to a red **STOP** box.

By default, ANAFI USA keeps you in the center of the frame, but you can drag the green box to the area of the screen you want to remain at.

6. Push Skycontroller 4's right joystick to the left (clockwise rotation) or to right (counterclockwise rotation) to circle ANAFI USA around you.

ANAFI USA manages the gimbal tilt to keep you in the center of the frame. Skycontroller 4's left trigger is deactivated in this mode. However, zoom control is still available with the right trigger.

When you release the commands, ANAFI USA keeps following you from a constant distance if you are moving. If you remain in the same position, ANAFI USA stops and stays focused on you.

7. Tap the red **STOP** box in the HUD's top bar, to have ANAFI USA stop tracking you.

When no target is selected, or when the tracking has been ended by the pilot, ANAFI USA's behavior is similar to that of the **Manual flight** mode.

Follow Me *mode Dronie options*

To select a Dronie:

1. Follow steps 1 - 5 in the *Follow Me* chapter on the previous page
2. Tap the **DRONIE** in the HUD's bottom bar
3. Tap 1 of the 4 dronie options.
4. Tap the sub option you want, to activate the Dronie. Sub options are displayed below:

Dronie	Sub options	Drone behavior
Orbit:	**left / right**	ANAFI USA circles around you in a full 360°.
Parabola:	**10m / 30m**	ANAFI USA flies in an arc over your head, gaining 10 or 30 meters in altitude and turning 180° at its peak.
Tornado:	**10m / 30m**	ANAFI USA performs a double Orbit around you, one up 10 or 30 meters, the other down 10 or 30 meters, back to its original height.
Boomerang:	**30m / 60m**	ANAFI USA flies away from you for 30 or 60 meters, with an ascending angle following that of the starting gimbal tilt, then comes back to its starting point.

A 3-second countdown timer displays on the screen, and then ANAFI USA starts moving around you. The Dronie progress box fills with green as the Dronie unfolds.

SmartDronies

ANAFI USA has 4 **SmartDronies.**

> **NOTE:** Both a drone GPS synchronization and device GPS synchronization are required to activate **SmartDronies**.

To select a SmartDronie:

1. Perform a drone GPS synchronization and/or a controller GPS synchronization if required.
2. Tap the **DRONIE** box in the bottom bar of the HUD.
3. Tap 1 of the 4 SmartDronie options.
4. Tap the sub option you want, to activate the SmartDronie.

SmartDronie	Sub options	Drone behavior
Orbit:	**left / right**	ANAFI USA circles around you in a full 360°.
Parabola:	**10m / 30m**	ANAFI USA flies in an arc over your head, gaining 10 or 30 meters in altitude and turning 180° at its peak.
Dolly zoom:	**Zoom out / Zoom in & out / Zoom in**	ANAFI USA flies away from you while also zooming in or out on you.
Boomerang:	**30m / 60m**	ANAFI USA flies away from you for 30 or 60 meters, with an ascending angle following that of the starting gimbal tilt, then comes back to its starting point.

A 3-second countdown timer displays on the screen, and then ANAFI USA starts moving around you. The SmartDronie progress box fills with green as the SmartDronie unfolds.

To optimize the drone's tracking, ensure that you remain visible to ANAFI USA. Do not let an obstacle block the camera's view, and do not hide in the shadows. This helps ANAFI USA to maintain tracking.

© 2026 Parrot Drones SAS. All Rights Reserved.

> ⚠ **WARNING:** Verify that the flight path of your drone is perfectly clear: at least 30 m behind it, flat and without obstacles. Keep the drone at least 5 m away, between 1 and 2 m above the ground.

FPV

FPV mode enables the pilot to experience a First Person View from the drone's aerial perspective in real-time. FPV mode requires a pair of FPV goggles. ANAFI USA is compatible with 11 different pairs of FPV goggles.

1. When you tap **FPV**, the **Welcome to FPV mode** screen opens.
2. Tap **CHANGE** to open the FPV goggles list.
3. Find and select your FPV goggles.
4. Connect your device to Skycontroller 4 to navigate the menu more easily.
5. Insert your device into the FPV goggles
6. Tap **TEST**

A new screen opens showing a split view of the camera feed.

7. Tap **+** or **–** to adjust the vertical position of the camera
8. Tap **< back**
9. Tap **START** to begin flying

> **NOTE:** FPV mode is not available on tablets.

Flight Plan

Flight Plan enables you to fully prepare and configure your flights and filming sessions.

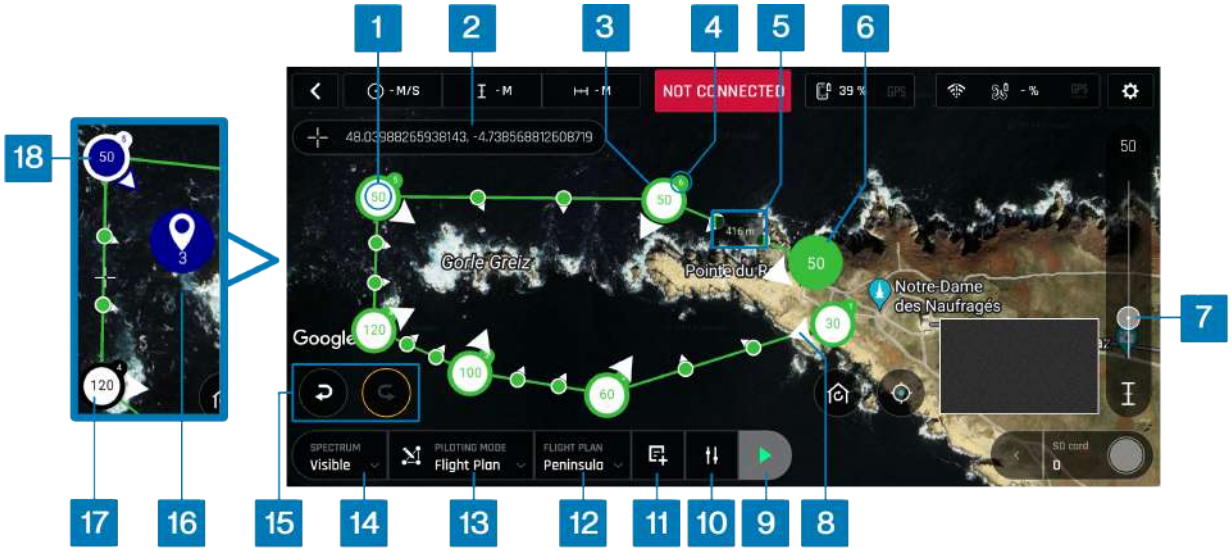

1. Waypoint altitude
2. ✛ Reticle coordinates
3. Waypoint
4. Waypoint number
5. Waypoint distance marker
6. Currently selected waypoint
7. Altitude/Speed slider
8. Camera direction
9. ▶ **Start** Flight Plan button
10. **PLAN OPTIONS**
11. Flight plan **Chart**
12. **Saved flight plans** box
13. **PILOTING MODE** box
14. **SPECTRUM** box
15. **Undo**/**Redo**
16. Point of Interest (POI)
17. Unlinked waypoint
18. POI Linked waypoint

> **NOTE:** In the event of a command-and-control link loss between ANAFI USA and Skycontroller 4 during a flight plan, the flight plan continues. If the command-and-control link is still lost at the end of the flight plan, ANAFI USA initiates an RTH, unless the **Landing on last point** is set to **Yes**.

1. Tap the **Flight Plan** box.

The map of your surroundings opens full screen. If you are not connected to ANAFI USA, the minimized live view is black.

2. Tap **PLAN OPTIONS**. A new window opens with 2 options:

PLAN OPTIONS		
Landing on last point	No/Yes	Choose if the drone lands on the last waypoint, or if the drone hovers.
Automatic progressive course	No/Yes	Choose if the drone stops briefly at each waypoint, or if the drone transitions smoothly from waypoint to waypoint.

Parrot recommends that you modify the settings of the flight plan before you begin.

3. To start a new flight plan, tap the screen to create the initial waypoint, ideally, very close to your intended take-off point.

Alternatively, select a previously saved flight plan to continue editing. Refer to *Start your flight plan* on page 79

Waypoints appears as green circles. The white figure in the center represents the drone’s altitude, and the white arrow represents the camera direction.

4. Change the direction of the ANAFI USA’s camera by pressing and holding on the white arrow.
5. Rotate the arrow to the desired camera direction.
6. Tap the map to create more waypoints.

The distance between the current waypoint and the previous waypoint appears on the flight path.

7. Tap the distance on the flight path to toggle between waypoint distance and drone speed.
8. Drag the slider to increase or decrease the speed.
9. To change the height of an individual waypoint, tap the desired waypoint.
10. Drag the slider to increase or decrease the altitude.

In the example above, ANAFI USA climbs from 30 meters at the initial waypoint to 120 meters at the highest point, down to 50 meters for the final waypoint.

11. Press and hold on the screen to create a Point of Interest.

A menu opens with 2 options: **Point of interest** / **Close**.

12. Tap **Point of interest** to add the POI.

The first POI appears as a blue circle. The white figure in the center represents the POI altitude. Subsequent POI's are different colors.

13. Drag the slider to increase or decrease the altitude.

© 2026 Parrot Drones SAS. All Rights Reserved.

> **NOTE:** If you want a more precise method to define the drone speed between waypoints, waypoint altitude, or POI altitude instead of using the slider, press and hold on the relevant marker. A menu bar appears. To modify the drone speed, tap **Speed**. To modify the waypoint or POI height, tap **Altitude**. A window opens to enter the desired value.

When you select a POI, all waypoints turn white to indicate that you can now link the waypoints to the POI. White waypoints are independant from any POI.

14. Tap a waypoint to link it to the POI.

The POI gets a white border. Blue waypoints are linked to the blue POI. During this segment of flight, ANAFI USA's camera stays focused on the blue POI. White waypoints remain independent from the POI.

> **NOTE:** POIs are color coded. Each POI you create is a different color from the previous. When you link a waypoint to a POI, the waypoint changes color to match the color of the POI, the arrow rotates toward the POI, and the arrows get a border to match the POI.

To unlink a waypoint from a POI, tap the POI, then tap the waypoint that you want to unlink. Tap the POI to confirm your choices.

Modify waypoints and POIs at any time. Tap the waypoint or POI to:

- change the altitude - drag the slider up or down.
- change the location - drag and drop the icon.
- delete the selected waypoint or POI icon - Press and hold the icon, tap **Delete**.

To save the new flight plan:

1. Tap the **Saved flight plans** box.
2. Tap **Save**.
3. Enter a **Title**. In the example above, the title is *Peninsula*.
4. Tap **OK**.

Flight plan Chart

The flight plan chart provides a graphical representation of the flight plan.

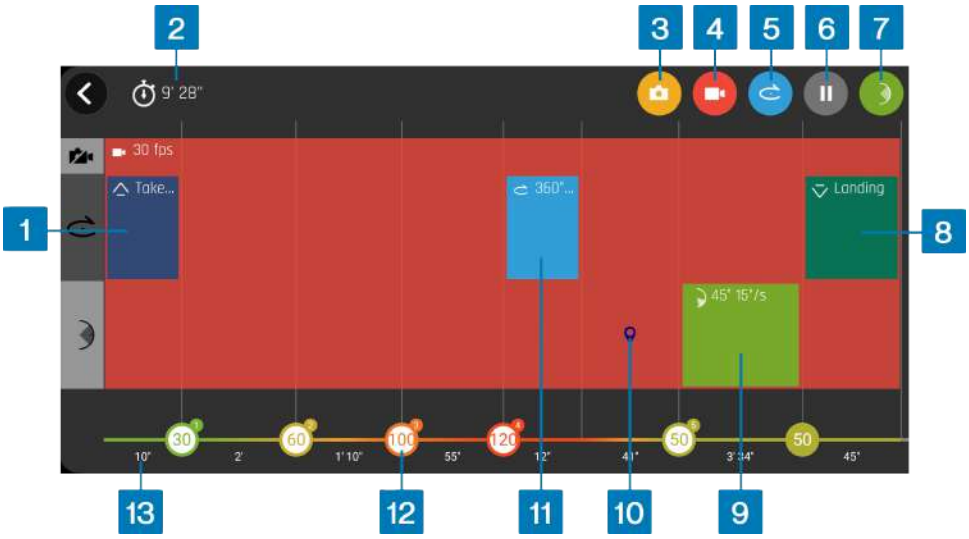

1. Takeoff marker
2. Total flight duration
3. Picture mode
4. Video mode
5. Drone rotation
6. Pause recording
7. Gimbal tilt
8. Landing marking
9. Gimbal tilt marker
10. POI
11. Drone rotation marker
12. Waypoint
13. Individual flight path duration

The waypoints are color-coded. The color spectrum displays green for lower altitude waypoints, and red for higher altitude waypoints.

Drag and drop buttons 3 - 7 onto the chart to modify the individual flight paths in the flight plan.

For picture mode, you can define the picture taking **Interval**, and the photo **Format**.

For drone rotation and gimbal tilt, you can define the **Angle** and the Angular **speed**.

For Pause, you can define the pause **Duration**.

Start your flight plan

1. Tap the **Saved flight plans** box in the HUD.

The **Saved flight plans** screen opens and displays all of your saved flight plans.

2. Tap the flight plan you want to start, or to continue editing.

The flight plan highlights in green.

3. Tap **Load**.
4. Tap ▶**Start** flight plan.

ANAFI USA takes off, flies to the first waypoint and starts the flight plan. At the end of the flight plan, depending on your settings and depending on your version of FreeFlight 6 USA, ANAFI USA lands at, or hovers over, the last waypoint you created.

> ⚠ **WARNING:** Monitor every Flight Plan with extreme care. Always verify the drone’s route is safe, and clear of obstacles. Always maintain visual contact with ANAFI USA. Always be ready to stop the flight plan in case of danger or unexpected obstacles.

Touch & Fly

Waypoint

Waypoint is the default Touch & Fly mode. It enables you to fly ANAFI USA to any point on the map.

1. Tap the **Touch & Fly** box.

The map of your surroundings opens full screen. The live image captured by ANAFI USA is minimized in the bottom right corner of the screen.

2. Tap a point on the map to select a destination for ANAFI USA.

This point is marked as a white circle with a green border. For each new Touch & Fly waypoint session, FreeFlight 6 USA asks you to confirm ANAFI USA's first destination.

3. Tap the green **TAP HERE TO START** box.

© 2026 Parrot Drones SAS. All Rights Reserved.

ANAFI USA flies toward its designated destination. Use the slider on the right of the screen to control the drone's altitude (the green figure inside the circle) when it reaches its destination.

CAUTION: Activate Touch & Fly Waypoint with care. After the initial confirmation, any tap on the map immediately sends ANAFI USA to the corresponding spot. Parrot recommends you set your FreeFlight 6 USA filming or photography options before activating the Touch & Fly Waypoint mode. If, by mistake, you send ANAFI USA toward a dangerous area, tap the **STOP** box in the HUD, or firmly reclaim commands from the Skycontroller 4.

POI

To access the POI Touch & Fly option:

1. Tap the **TYPE** box
2. Tap **POI**.
3. Tap a point on the map to create a POI.

The POI appears as a white square diamond with a blue border, labelled with a POI icon.

Control the height of the POI (the blue figure inside the square diamond) with the slider on the right. This controls the gimbal tilt, while you use the Skycontroller 4 to fly around your target. ANAFI USA remains focused on the POI.

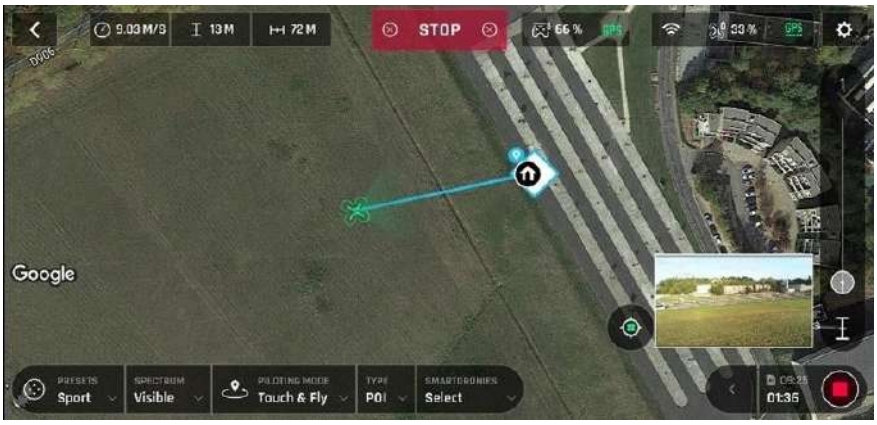

4. Tap **STOP** in the HUD to halt ANAFI USA, or to reset a POI.
5. Tap the **SMARTDRONIES** box, to select one the of the 4 **SmartDronies**:
    - **Orbit**
    - **Parabola**
    - **Dolly Zoom**
    - **Boomerang**

Refer to *Piloting modes* on page 73 for more information.

How to prepare your map

This chapter describes how to prepare a map for flight. There are 2 ways to prepare a map:

- Save your future flying area map on FreeFlight 6 USA while connected to the Internet, then use it offline in the field.
- Import your own custom maps to FreeFlight 6 USA without an internet connection.

Save future maps online for offline use

Use this tool to prepare a satellite view of your next destination. The satellite view displays during the flight even if you do not have an internet connection in the field.

1. Ensure that the FreeFlight 6 USA device is connected to the internet.
2. Ensure that the map engine interface setting is set to **GOOGLE MAP** (Specific to FreeFlight 6 USA Android).
3. Tap the **Load map** tile on the FreeFlight 6 USA home screen.
4. A satellite view screen opens. Scroll to the area that you intend to fly over.
5. Tap **Prepare the map**.

A green bar appears which displays the progress of your map preparation.

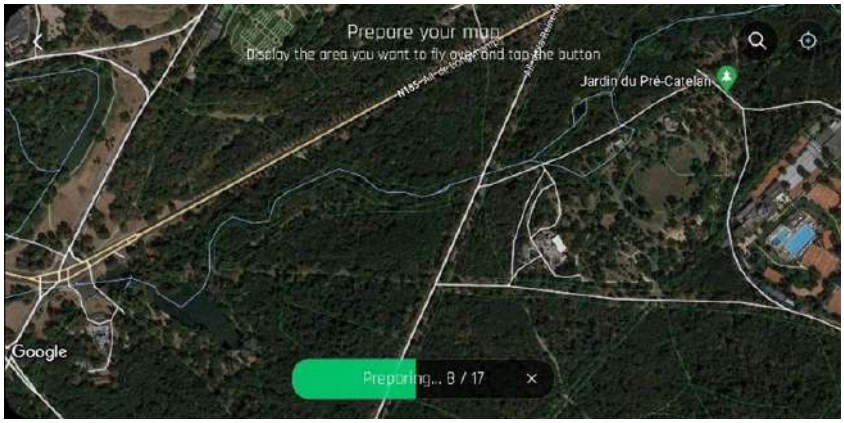

The map of your future mission is then saved to the FreeFlight 6 USA application memory. The map remains available even when your device is offline.

Import custom maps to FreeFlight 6 USA

You can import your own map files to FreeFlight 6 USA including MBTiles, and PNG maps.

Map engines

FreeFlight 6 USA iOS features 1 option for the map engine.

FreeFlight 6 USA Android features 2 options for the map engine used. Each map engine uses a different type of map file. You can import offline maps for both engines. You must change the **Map Engine** in FreeFlight 6 USA depending on which type of map file you choose:

Map Engine	File type	Operating system
GOOGLE MAP	PNG Tile	Android
MAPLIBRE	MBTiles	Android
APPLE PLAN	PNG Tile	iOS

IMPORTANT: For FreeFlight 6 USA Android, the minimap is always hidden for the **MAPLIBRE** map engine.

© 2026 Parrot Drones SAS. All Rights Reserved.

To change the map engine on FreeFlight 6 USA Android:

1. Tap **Settings**.

The **PREFERENCES** menu opens.

2. Tap **Interface**.
3. Scroll down to **Map Engine**.
4. Tap **GOOGLE MAP** or **MAPLIBRE**.

Upload custom maps

> **IMPORTANT:** FreeFlight 6 USA automatically renames duplicate files by adding a number in parentheses after the file name, for example: *MyMap(1)*. Parrot recommends that you name each map file differently before you transfer the map file in order to easily distinguish between 2 regions.

1. Connect your FreeFlight 6 USA device to a computer.
2. Copy the file(s) to the desired folder on the FreeFlight 6 USA device (Recommended folder: **FreeFlight 6 USA\Custom maps**).
3. Return to the FreeFlight 6 USA home screen.
4. Tap the **Load map** tile.

The **Prepare your map** screen opens.

5. Tap **Download Custom Maps** at the bottom right.

The **Custom Maps** screen opens,

6. tap **Import** at the top right.

The device File Manager opens.

7. Tap the **My Files** folder, in the device internal storage.
8. Search for the map file in the folder you selected in step 2 (Recommended folder: **FreeFlight 6 USA\Custom maps**) and select the file(s) that you want to import.
9. Tap **Done**.

The **Custom maps** screen opens again, and a green circular progress bar indicates that the map(s) is(are) loading.

10. Tap **< Back** to return to the **Prepare your map** screen.
11. Tap **< Back** to return to the home screen.
12. Tap **FLY** on the FreeFlight 6 USA home screen.

The HUD screen opens.

13. Tap the circle showing the map on the bottom right of the screen. You can now see your map. You may need to zoom to the correct location.

If a .mbtiles map file is corrupt, it may force FreeFlight 6 USA to crash. If you experience difficulties due to a corrupted map, follow this procedure:

1. For FreeFlight 6 USA Android only, revert to the **GOOGLE MAP** map engine. Refer to *Map engines* on the previous page for more information.
2. Tap the **Load map** tile from the FreeFlight 6 USA main screen.

The **Prepare your map** screen opens.

3. Tap **Download Custom Maps** at the bottom right.
4. On the **Custom Maps** screen, swipe left on the corrupted map until you see the **Delete** tile.
5. Tap **Delete**

A menu opens. You must confirm if you want to delete the file.

6. Tap **YES**.

How to create your own custom DTED and GeoTIFF maps online

Alternatively, you can create DTED or GeoTIFF maps online, and then upload these maps to FreeFlight 6 USA. Follow these steps to create, download, and import custom maps.

1. Navigate to the USGS Earth Explorer.

> **NOTE:** You must create an account, and log into USGS to download and order scenes.

2. Search for the area you want to create a map for.
3. To create a grid, click on the map at least 3 times to place map pins.
4. Click the **Data Sets** tab.
5. Click **Digital Elevation** to expand the menu.
6. Click **SRTM** to expand the menu.
7. Click the checkbox beside **SRTM 1 Arc-Second Global**.
8. Click the **Results** tab.
9. Click the download icon.

The **Download Options** window opens.

10. Click **Download** beside **GeoTIFF 1 Arc-second**.

> **NOTE:** You must convert the GeoTIFF 1 Arc-second file into a format compatible with FreeFlight 6 USA. Refer to the following chapter on how to convert a GeoTiff map into a MBTiles map or PNG tile map.

Convert a GeoTIFF map to a MBTiles map or a PNG tile map

The free QGIS software allows you to convert GeoTIFF maps into .mbtiles files for the **MAPLIBRE** map engine, or .png files for the **GOOGLE MAP** and **APPLE PLAN** map engine. Follow this procedure to convert your files:

1. Launch QGIS.
2. Double-click on **New Empty Project**, under **Project Templates**.
3. Drag and drop your GeoTIFF file from your computer into the main QGIS window to bring your GeoTIFF file into the software's main interface.
4. Ensure that your GeoTIFF file has been imported onto your PC screen. It appears in the **Layers** menu on the left-hand side of the screen.
5. In the top bar navigation menu, click on **Processing**, then on the first option in the drop-down menu, Toolbox.

The conversion interface opens on the right-hand side of the screen.

6. To create a .mbtiles file, follow sub step A), to create a .png file, follow sub step B):
   A. .mbtiles file - In the **Toolbox**, double-click on **Raster Tools**, then click on **Generate XYZ tiles (MBTiles)** (See the blue box).
   B. .png file - In the **Toolbox**, double-click on **GDAL**, then double-click on Raster miscellaneous, then click **gdal2tiles** (See the green box). Click **Run** to start the conversion.

© 2026 Parrot Drones SAS. All Rights Reserved.

> **NOTE:** If you follow step 6.B to create a .png file, the conversion process is complete after you click Run, however, you must compress all new folders (.zip format) from the Output directory. Do not rename the folders. The conversion can take over 1 hour, depending on the size of the original file.

If you follow step 6.A, continue with step 7 for the .mbtile conversion process.

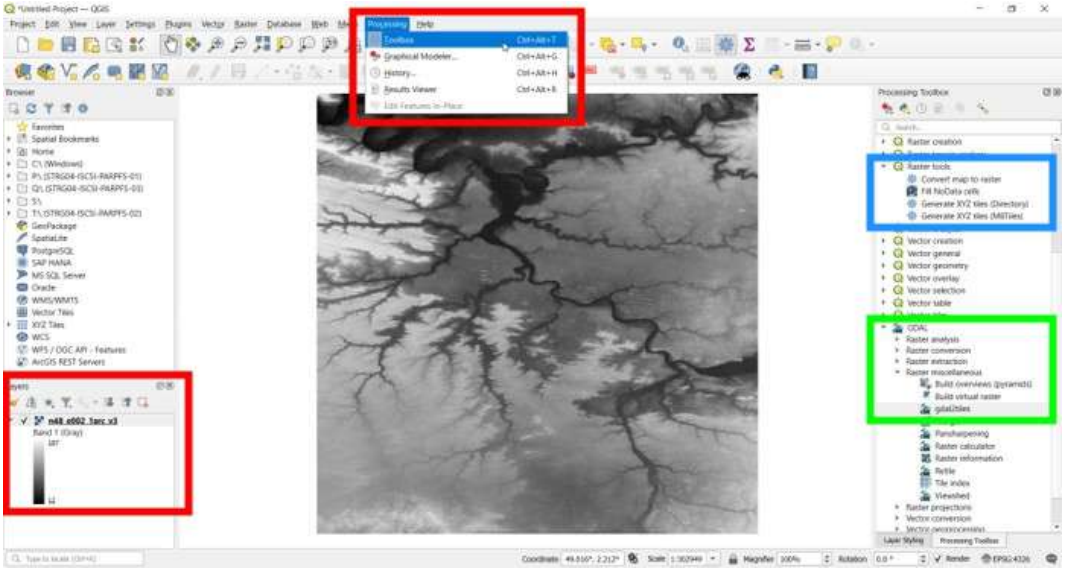

The **Generate XYZ tiles (MBTiles)** menu opens.

7. Under the **Parameters** tab, in the **Extent** field, click the down arrow to open a drop-down menu.
8. Click **Use Current Map Canvas Extent**.
9. From the drop-down menu, click **Draw on Map Canvas**.
10. Choose the appropriate zoom levels.
11. Under the **Parameters** tab, in the **Output file (for MBTiles) [optional]** field, click the down arrow to open a drop-down menu.
12. Click **Save to file...**
13. Name the file, and click **Save**.
14. Click **Run**. The conversion can take more than one hour, depending on the size of the map and the parameters of the previous steps.

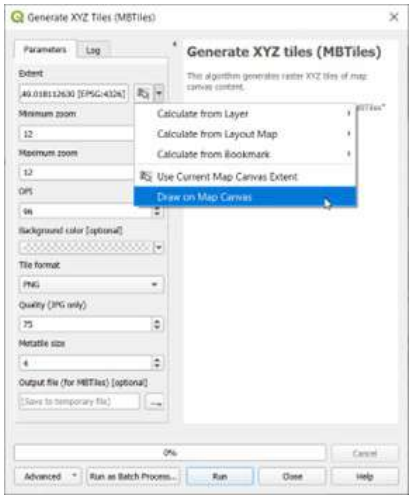

Maintenance and troubleshooting

This section explains basic maintenance procedures for your drone and how to troubleshoot possible issues with ANAFI USA. It also includes reset procedures for the drone and controller, which are useful when changing the operator or operating structure.

Changing propeller blades

Propeller blades are delicate pieces of equipment and are instrumental for flight integrity. Even minor contacts with external elements (walls, tree branches, etc.) can damage their structure. Damage is not necessarily visible.

As a safeguard measure, ANAFI USA is programmed to cut its motors instantly in case of impact to one of its propeller blades. Always control your drone carefully.

> **TIP:** Replace propeller blades if they sustain even minor contacts with the environment.
> Replace propeller blades every 50 flight hours, as part of scheduled maintenance.

ANAFI USA propeller blade replacement is instant and does not require tools. Follow this procedure to replace a propeller blade:

1. Unfold the arm that supports the blades which require replacement.
2. Hold the motor (round rotating part) of the propeller between your left thumb and index finger.
3. Unfold the blades.
4. Pinch the propeller hub (between the blades) with your right thumb and index.

A. blades: unscrew used/damaged A blades (Front left & rear right) counterclockwise and screw new ones clockwise.

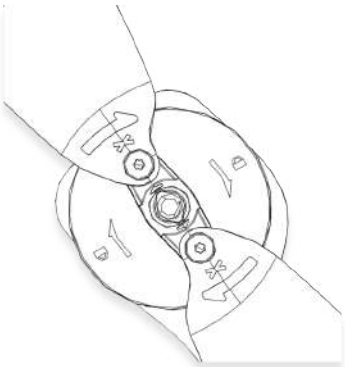

B. blades: unscrew used/damaged B blades (Rear left & front right) clockwise and screw new ones counterclockwise.

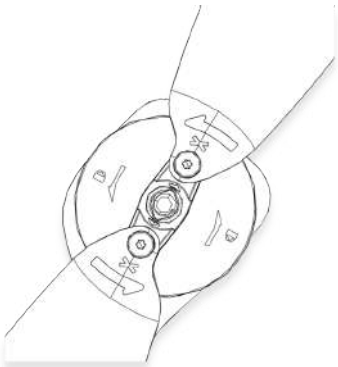

Ensure that your blades respect the following diagram before setting up ANAFI USA for its next flight.

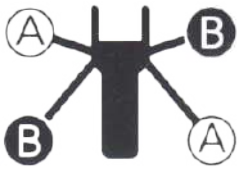

Propeller blades and smart batteries can be purchased separately. Find an ANAFI USA spare parts reseller here.

> **CAUTION:** Do not remove the propellers unless you need to replace them. Do not overtighten the propeller hubs. Overtightening or frequent removal of the propellers may weaken the thread lock and reduce the propeller assembly's fixation quality.

© 2026 Parrot Drones SAS. All Rights Reserved.

Rebooting all systems

When the ecosystem does not perform as expected, the first procedure is to power off and reboot all elements of the ecosystem. Rebooting all systems may solve connectivity issues (black screen, white noise, etc.):

1. Press ⏻ **Power** to power off ANAFI USA.
2. Close the FreeFlight 6 USA application on your device.
3. Reboot your Skycontroller 4.
4. Press ⏻ **Power** to power on ANAFI USA.
5. Wait for synchronization between Skycontroller 4 and ANAFI USA: check that the left trigger of the Skycontroller 4 activates the drone's gimbal to ensure the synchronization is complete.

Reinstalling FreeFlight 6 USA

If you must delete and reinstall FreeFlight 6 USA later, ensure that you back up all your device FreeFlight 6 USA media, as media may be deleted along with the application.

ANAFI USA drone hard reset

Hard resetting ANAFI USA reverts the drone's most recent firmware to its original state. Parrot recommends the drone hard reset as a first intent procedure for several issues, notably gimbal calibration troubles. It cleans all media, logs and credentials from the drone. For this reason, ensure that you back up all your **Drone memory** FreeFlight 6 USA media before resetting ANAFI USA.

To perform a drone hard reset:

1. Verify that a compatible microSD card is inserted in ANAFI USA.
2. Power ANAFI USA on (short press on the battery's Power button).
3. Wait for the gimbal to calibrate (or for the gimbal calibration to fail).
4. Press and hold the battery's Power button. After 8 seconds the battery's LED lights up in red.
5. Release the battery's Power button. ANAFI USA powers off briefly then reboots.
6. Verify that the contents of ANAFI USA's microSD card.

The hard reset procedure generates a .TXT document named *wifi_security_key* at the root of the microSD card. This is not applicable to ANAFI USA SE version.

Skycontroller 4 hard reset

Resetting the Skycontroller 4 cleans all logs and credentials, removes any pairings with drones, and removes any custom button remapping.

To reset the Skycontroller 4, ensure that it is not connected to any drone. If a drone is connected, it initiates a take-off sequence.

Press and hold the controller's **Take-off/Land**, **Optics reset**, and **Media recording** buttons for 15 seconds, then release the 3 buttons.

> **NOTE:** The LED starts flashing after 10 seconds, but you must hold the buttons for 5 more seconds.

The Skycontroller 4 reboots. The reset is successful.

The same procedure can be performed safely, even with a drone connected, through the **Reset** button of the Skycontroller 4 page, in FreeFlight 6 USA.

> ⚠ **WARNING:** When the Skycontroller 4 reboots, the connection between the drone and controller is lost.

ANAFI USA's smart battery hard reset

A hard reset of ANAFI USA's battery may correct battery issues. Parrot recommends a battery hard reset whenever the battery's behavior is unexpected.

You must reset your battery if:

- the battery behavior is not consistent with the information in *Smart LiPo battery* on page 19,
- the battery does not power on ANAFI USA,

Follow this procedure to hard reset the smart battery:

1. Connect the smart battery to a power source.
2. Regardless of the battery's behavior, press and hold the ⏻ **Power** button for 15 seconds.
3. Release the ⏻ **Power** button.

The battery's LEDs run successively in green and red, then flash alternatively in green.

The battery's hard reset is complete.

TIP: Replace smart batteries after 300 charge/discharge cycles to ensure lasting performance.

Recover ANAFI USA

In the event of a hazardous situation, follow this procedure:

1. Press **RTH** on the Skycontroller 4 to cause the drone to return to its home position.
2. If the drone does not return, attempt to initiate an automatic landing by pressing the **Take-off/Land** button on the Skycontroller 4.
3. Try to locate the ANAFI USA position.
4. Ensure that this event does not cause a subsequent hazardous situation based on its last known position.

⚠ **WARNING:** If there is a reasonable expectation that the loss of control will cause injury to a person, contact the emergency services. Hazardous circumstances may result in a situation where normal use of ANAFI USA is not respected. Read and respect the operational requirements described in *Appendix: Operational checklist* chapter on page 90.

Drone end of service life

Refer to the Flight Safety Guide provided in the packaging to find complementary information on how to recycle this product.

The propeller blades and the carry box are made of plastic, they can be disposed of in a recycle bin.

All the electronic devices (ANAFI USA, Skycontroller 4, smart battery) must be returned to a collection point (e.g. stores, recycling center) to be recycled. It is indicated by the following logos:

© 2026 Parrot Drones SAS. All Rights Reserved.

Frequently asked questions

What do I do if I experience a connectivity issue (black screen, white noise, thermal camera activation failure, frozen or lagging stream)?

1. Check that your device's Wi-Fi is disabled: Parrot recommends you set your device in Airplane mode when you fly ANAFI USA, to minimize the risks of communication disturbance.
2. Reboot all systems. Refer to *Rebooting all systems* on page 86 for more information.

What do I do if my ANAFI USA's gimbal does not calibrate?
Hard reset ANAFI USA. Refer to *ANAFI USA drone hard reset* on page 86 for more information.

What do I do if my ANAFI USA does not power on?
Ensure that your smart battery is "awake". Plug it into a power source to take it out of wintering mode. Its LEDs start flashing to acknowledge that it is charging. Parrot recommends you always fully charge your smart battery before you fly ANAFI USA.

What do I do if my battery shows a strange behavior (flashing LED, red LED, etc.)?
Reset the smart battery. Refer to *ANAFI USA's smart battery hard reset* on the previous page for more information.

What do I do if I cannot properly read the information displayed by FreeFlight 6 USA?

1. Access the settings of your device.
2. Find the **Display / Text and display size** (or equivalent) options.
3. Turn down the **text size** of your device, its **display size**, or both to let FreeFlight 6 USA accommodate all its information on your screen.

What do I do if my ANAFI USA is connected to the Skycontroller 4, but won't take off when I press the take-off button?

1. Connect your device (in airplane mode, or with Wi-Fi turned off) to your Skycontroller 4.
2. The drone or controller boxes of the homescreen of FreeFlight 6 USA indicate either that:

- you must update your Skycontroller 4, your ANAFI USA, or both;
- or you must calibrate your ANAFI USA's gimbal;
- or you must perform a magnetometer (drone) calibration via the **Drone Information** tile on the FreeFlight 6 USA home screen;
- or you must calibrate your Skycontroller 4.

What do I do if my ANAFI USA flips over at take-off?
The propeller blades are not installed correctly. Remove all propeller blades and reinstall them properly and carefully, following the instructions enclosed in all ANAFI USA propeller blades packs.

What do I do if my Skycontroller 4 does not synchronize with my ANAFI USA?

1. Ensure that no device is connected on ANAFI USA's Wi-Fi network, with FreeFlight 6 USA running.
2. Pair your ANAFI USA to your Skycontroller 4. Refer to *Pairing ANAFI USA to a Skycontroller 4* on page 28 for more information.

What do I do if my Skycontroller 4 does not synchronize with my device?

1. Try connecting your Skycontroller 4 and your device with a different cable, to eliminate a potential faulty cable issue.
2. When you have eliminated the faulty cable issue, and if you still cannot get the controller and device to synchronize, turn your Skycontroller 4 off.

3. Try connecting your device to your ANAFI USA's Wi-Fi network and open FreeFlight 6 USA.
4. If your device does not connect to ANAFI USA, try uninstalling FreeFlight 6 USA and reinstalling it

CAUTION: if you use an iOS terminal, remember to save your FreeFlight 6 USA media on your device or on a computer, as uninstalling FreeFlight 6 USA deletes all your media.

5. When your device and ANAFI USA are connected, plug your device to your Skycontroller 4.
6. After less than a minute, the full ecosystem connection restores (FreeFlight 6 USA on the device, Skycontroller 4, ANAFI USA).

If the full connection is not restored, contact Parrot Support.

What do I do in the unlikely event my ANAFI USA has sustained a crash?

IMPORTANT: You must change all your propeller blades before attempting another flight. Propeller blades are instrumental for flight integrity and delicate pieces of equipment. Minor crashes may not show visible signs of damage to their structure.

1. Set up ANAFI USA for a flight.
2. Check the ANAFI USA page of FreeFlight 6 USA. Any permanently damaged element (gimbal or motor) appears in red. If an element is damaged, refer to the following paragraph below.
3. If no element is damaged, perform the calibration(s) requested by FreeFlight 6 USA (gimbal, magnetometer, or both), via the **Drone Information** tile on the FreeFlight 6 USA home screen.
4. Fly ANAFI USA, take pictures and videos.
5. Check your ANAFI USA pictures and videos to see if your drone's horizon if offset.
6. If your horizon is offset, perform the **Correct horizon** procedure of FreeFlight 6 USA's **Camera Preferences.**
7. If the **Correct horizon** function cannot straighten your horizon, it means a part of your gimbal is deformed and your drone requires service and a new calibration.

If the crash damaged a component of ANAFI USA essential to a safe flight (such as its vertical camera or its ultrasonic sensor), the drone will not be able to take off. A FreeFlight 6 USA alert asks you to contact your Parrot Support Partner. In this case, you must provide the Parrot Support Partner with:

A. The serial number of your ANAFI USA;
B. A proof of the purchase (invoice) of your ANAFI USA;
C. The full contents of your microSD card *FDR* folder.

© 2026 Parrot Drones SAS. All Rights Reserved.

Appendix: Operational checklist

Update & calibration

Device	SYSTEMATICALLY UP TO DATE
FreeFlight 6 USA	SYSTEMATICALLY UP TO DATE
Skycontroller 4	SYSTEMATICALLY UP TO DATE
ANAFI USA	SYSTEMATICALLY UP TO DATE
Magnetometer calibration	OK
Skycontroller 4 calibration	OK
Gimbal calibration	OK
Horizon calibration (exceptional)	OK

IMPORTANT: Regularly refer to the Release Notes ANAFI USA to ensure that you have the latest versions of the drone and controller firmware, and FreeFlight 6 USA App. If you are an offline user, contact Parrot/Parrot reseller to obtain the .apk file to perform an offline system update. Refer to *FreeFlight 6 USA offline update via .APK file* on page 32 for more information.

Skycontroller 4 & ANAFI USA OFF

Arms	Unfolded, locked
Gimbal protective cover	Removed
Check drone and gimbal	OK
Check propellers	Intact, free, fully screwed on
Check Skycontroller 4 battery	100 % charged
ANAFI USA battery	Intact, 3 hooks engaged in drone, 100% charged
ANAFI USA battery LED	4 x OK
ANAFI USA battery temp	Within operational range
Device battery	OK, 100% charged

Skycontroller 4 & ANAFI USA ON

Skycontroller 3	Open, on, flashing LED - light blue to dark blue
Skycontroller 4	On, flashing LED - light blue to dark blue
ANAFI USA	On, gimbal calibration OK
Skycontroller 4 / ANAFI USA radio link	Steady dark blue LED on Skycontroller 4
Device	On, Wi-Fi & Bluetooth off
Device / Skycontroller 4 USB connection	OK
FreeFlight 6 USA	Launched
Left trigger moves gimbal	OK
Image feed & telemetry	OK
Piloting Mode	Set
RTH parameters	Set
Max altitude/max distance	Set
Geocage	Set if needed
Image settings	OK
Check joystick mode	Inverse / Special
Map on FreeFlight 6 USA	OK
MicroSD card	Inserted, formatted, with sufficient memory

Battery levels	XXX% (report on flight log if ≠ to 100%)
Global reactivity	Set
Camera tilt speed	Set
Inclination	Set
Speed (Vertical and Rotation)	Set

Before take-off

GPS signal (ANAFI USA and device)	Green
Weather	Checked and OK
Take-off Zone	Clear
Drone status	Check
Take-off/Land command	Take-off

After take-off

Precise Home Set	Depending on conditions / 10 s or 10 meters
Check joystick mode	Inverse / Special
Check flight commands	OK
Check gimbal	OK
Video feed	OK
Video latency	OK
Drone status	Check

Before landing

Weather	OK
Landing Zone	Clear
Drone status	Check
Take-off/Land command	Land

After landing

Check engines off	OK
Drone status	Check
Skycontroller 4	Off, stored away
Check drone/gimbal/propellers	OK
Gimbal protective cover	Installed
ANAFI USA battery	Off
ANAFI USA arms	Folded
ANAFI USA drone, MicroSD card, cables	Stored away

Documents

Flight & batteries info	Report on flight log

© 2026 Parrot Drones SAS. All Rights Reserved.