Honeywell

Interactive Catalog Replaces Catalog Pages

Honeywell Sensing and Control has replaced the PDF product catalog with the new Interactive Catalog. The Interactive Catalog is a power search tool that makes it easier to find product information. It includes more installation, application, and technical information than ever before.

CHECK THIS OUT!
Sensing and Control
Interactive Catalog...

Click this icon to try the new Interactive Catalog.

Sensing and Control
Honeywell Inc.
11 West Spring Street
Freeport, Illinois 61032

MOUNTING DIMENSIONS (For reference only)

OVERTRAVEL PLUNGERS

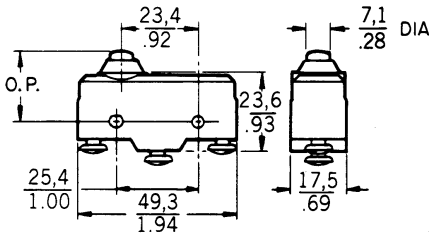

Fig. 11

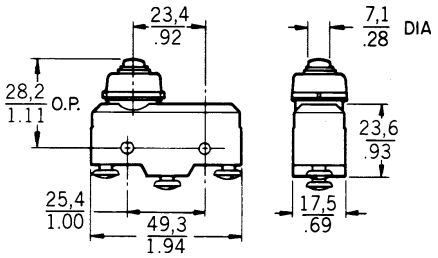

Fig. 12

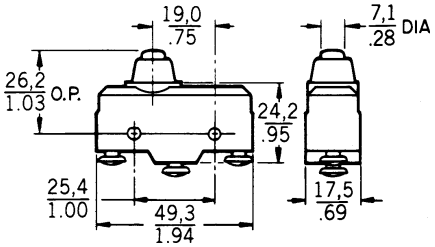

Fig. 13

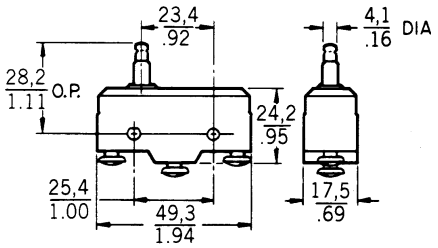

Fig. 14

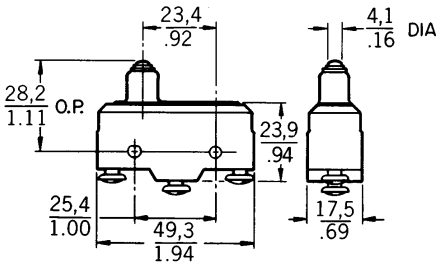

Fig. 15

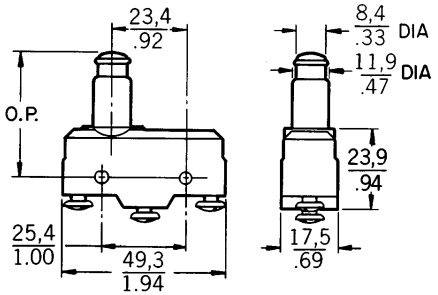

Fig. 16

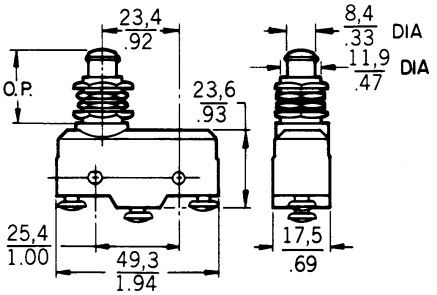

***Fig. 17**

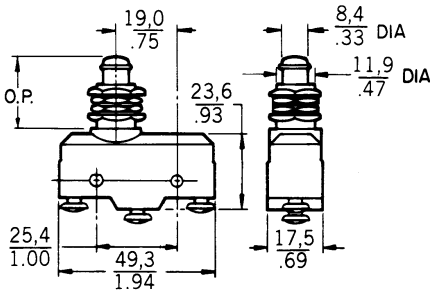

***Fig. 18**

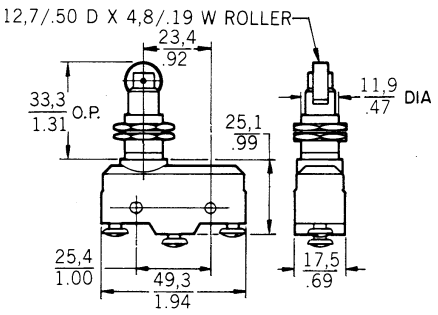

***Fig. 19**

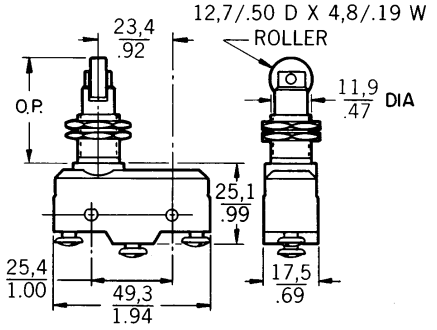

***Fig. 20**

*** Threaded bushings are 15/32-32ns.**

MOUNTING DIMENSIONS (For reference only)

STRAIGHT LEVERS

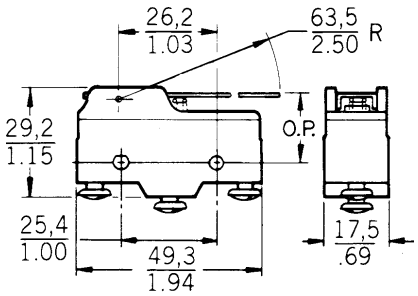

Fig. 21

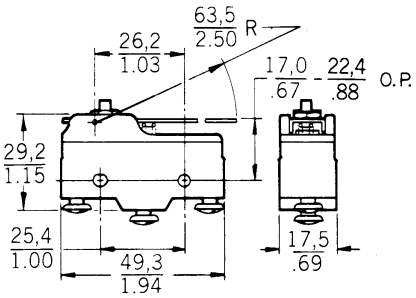

Fig. 22

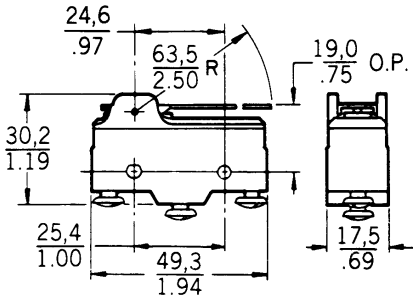

Fig. 23

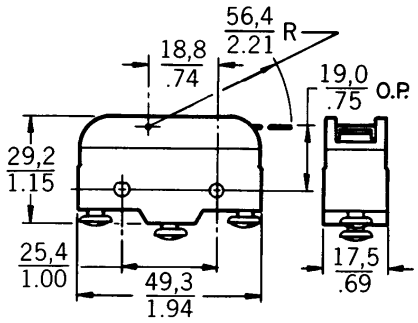

Fig. 24

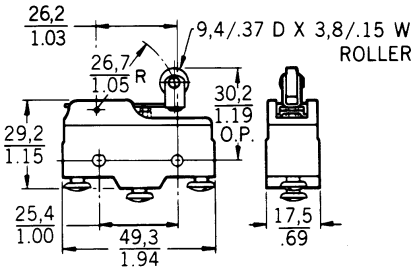

Fig. 25

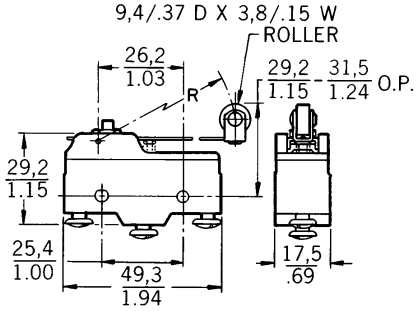

R = 26,7/1.05 FOR BZ-2RW82299-A2
48,3/1.90 FOR BZ-2RW8299-A2

Fig. 26

FLEXIBLE LEAF ACTUATOR

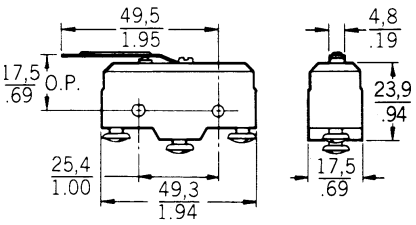

Fig. 33

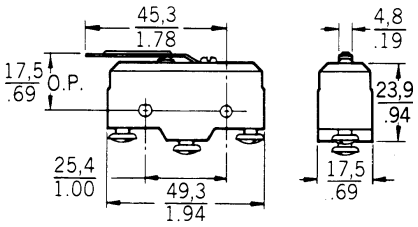

Fig. 34

MOUNTING DIMENSIONS

ROLLER LEVERS

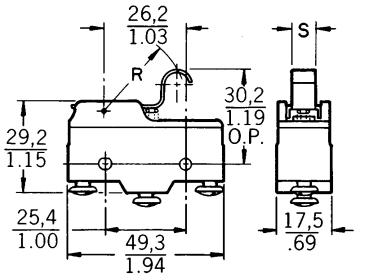

R = 26,7/1.05 FOR BZ-2RW80147-A2
48,3/1.90 FOR BZ-2RW80196-A2

S = 7,9/.31 FOR BZ-2RW80147-A2
4,8/.19 FOR BZ-2RW80196-A2

Fig. 27

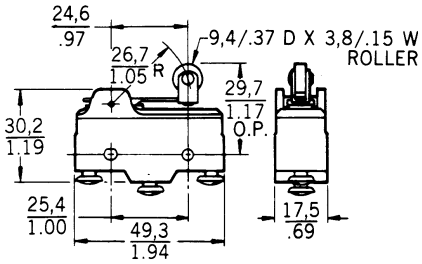

Fig. 28

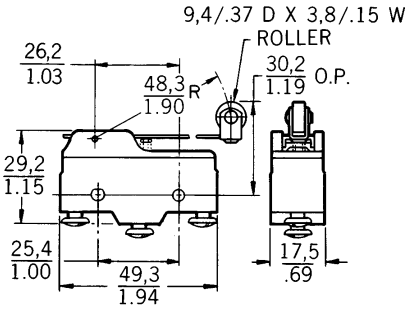

Fig. 29

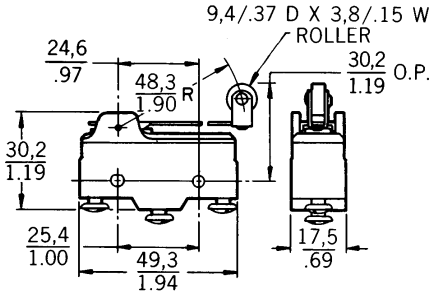

Fig. 30

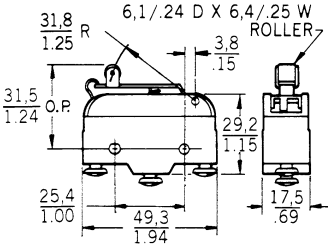

Fig. 31

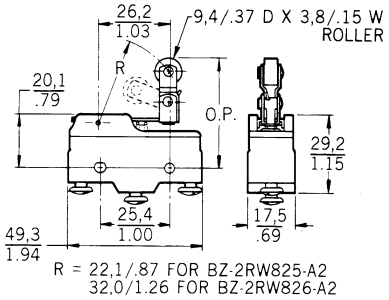

R = 22,1/.87 FOR BZ-2RW825-A2
32,0/1.26 FOR BZ-2RW826-A2

Fig. 32

FLEXIBLE ROLLER LEAF

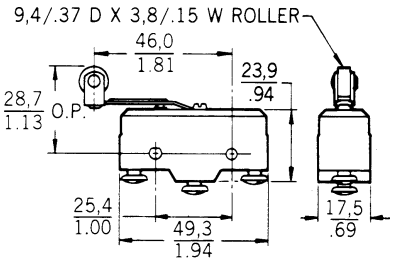

Fig. 35

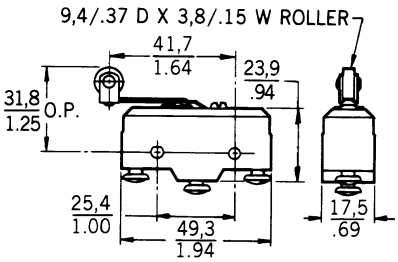

Fig. 36

Mounting holes accept pins or screws of .139″ (3,53 mm) diameter.

Key: 0,0 = mm / 0.00 = inches