INSTRUCTIONS SHEET

Tools:

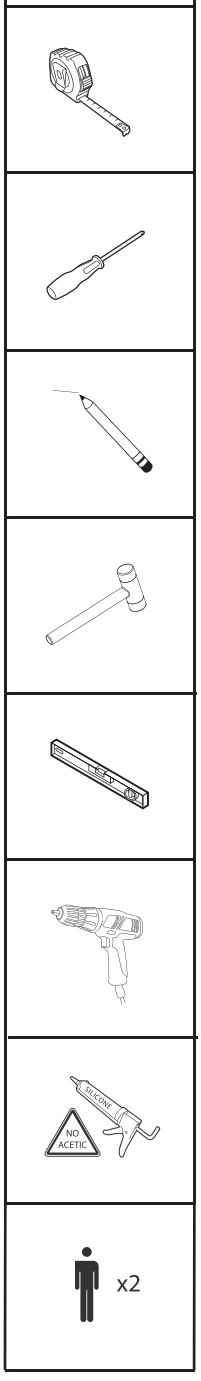

A

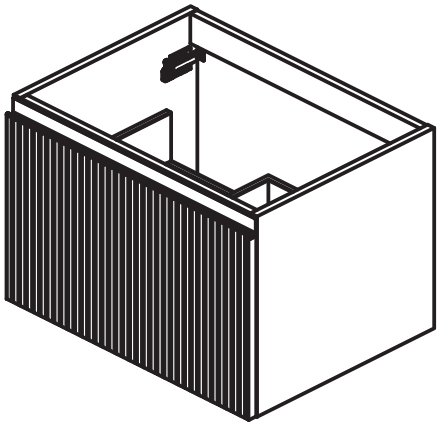

B

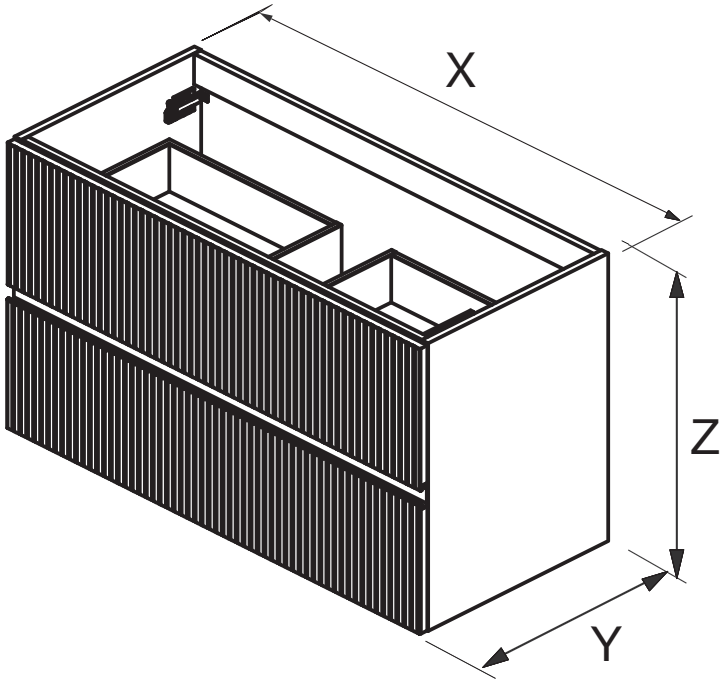

	mm		
	X		Z
A	595	450	400
	795	450	400
	995	450	400
B	595	450	565
	795	450	565
	995	450	565

Y

1

A

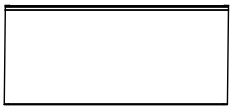

B

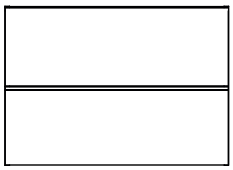

2

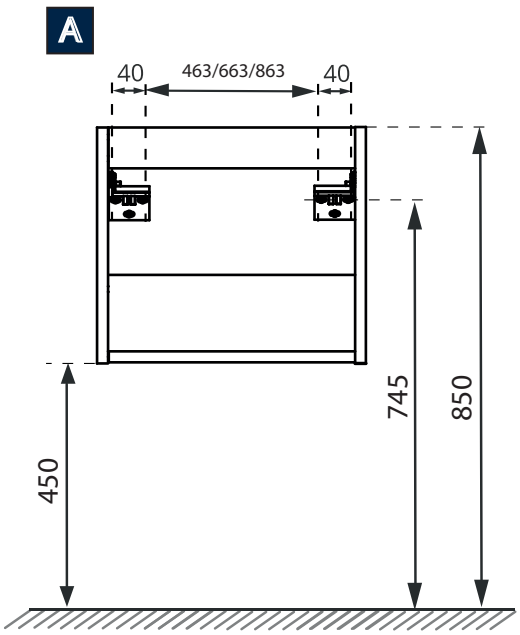
A
40
463/663/863
40
745
850
450

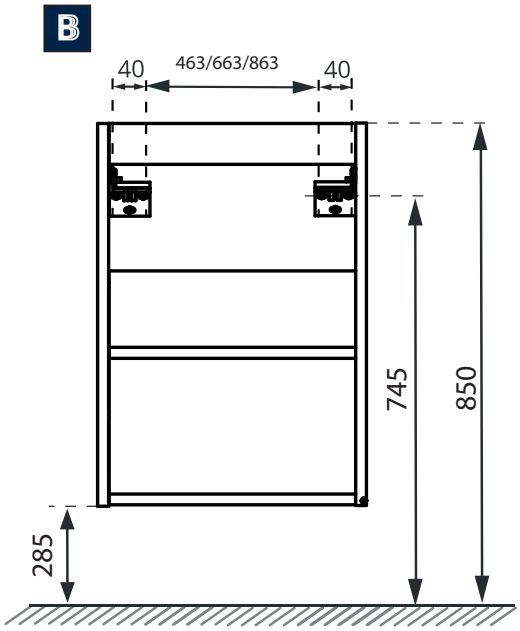
B
40
463/663/863
40
745
850
285



3

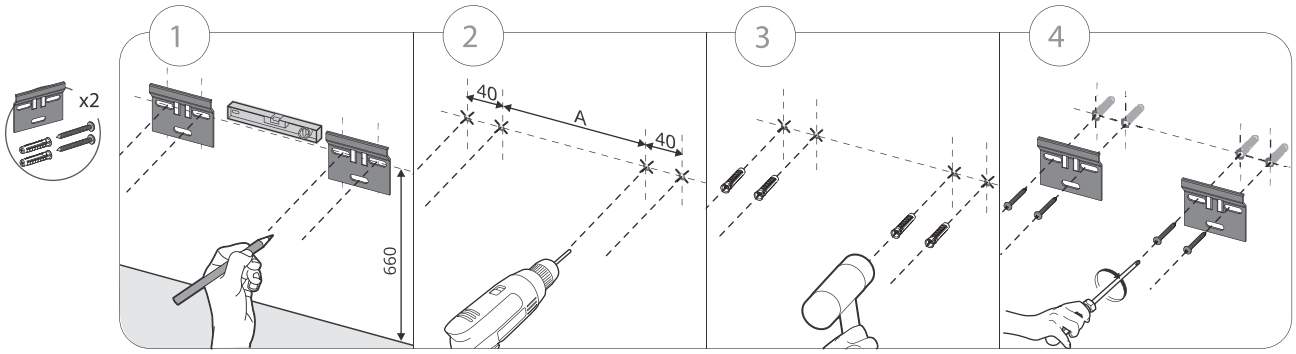
x2
1
2
3
4
660
40
A
40

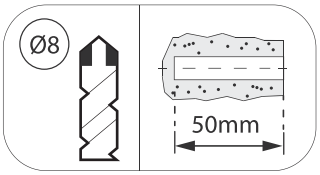
Ø8
50mm

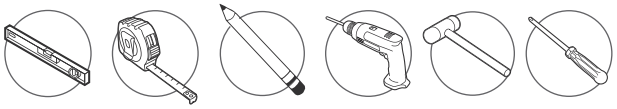

OPTIONAL

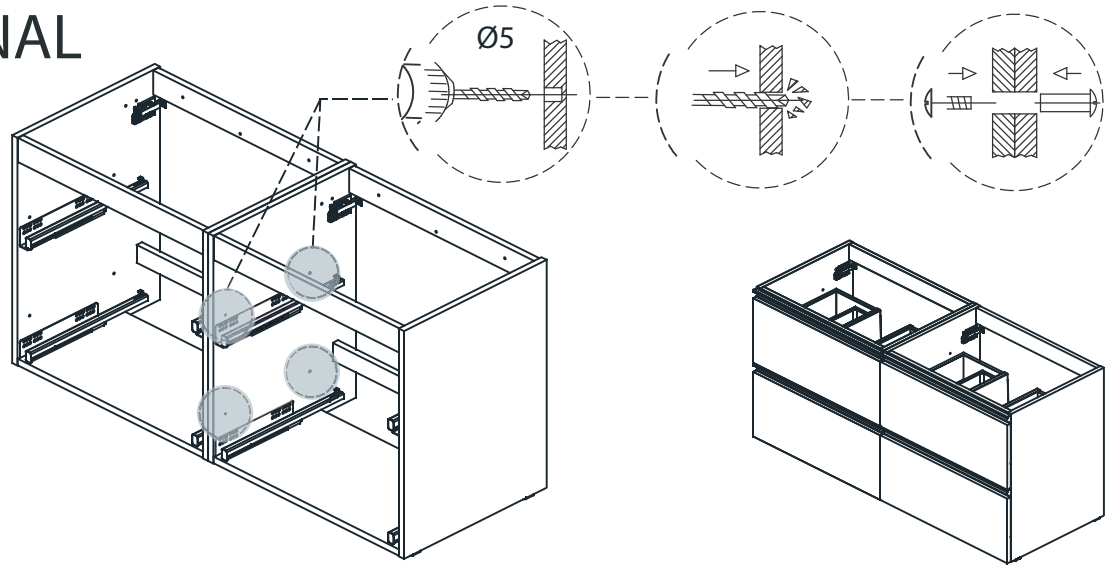
Ø5



x2 x2
x2 x2
BO-266
128059
Ø5

4

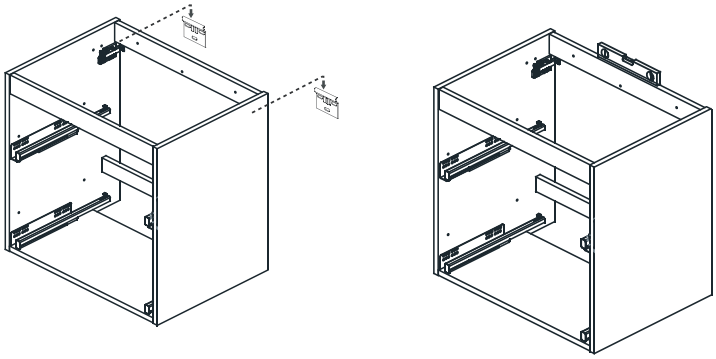

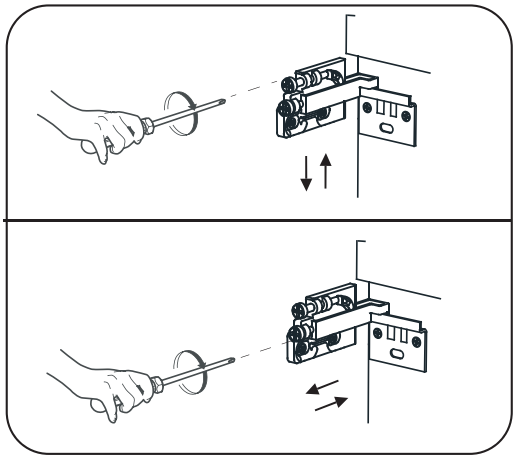

5

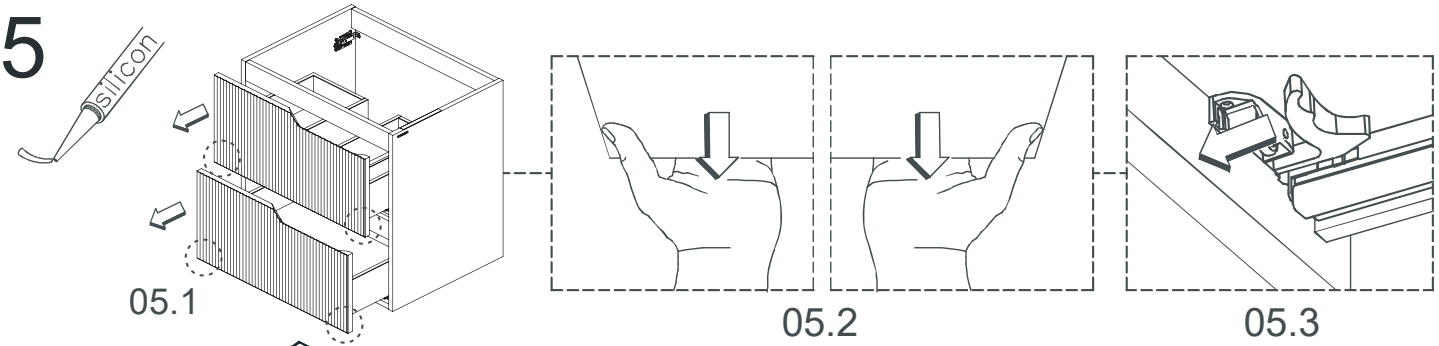
silicon
05.1
05.2
05.3

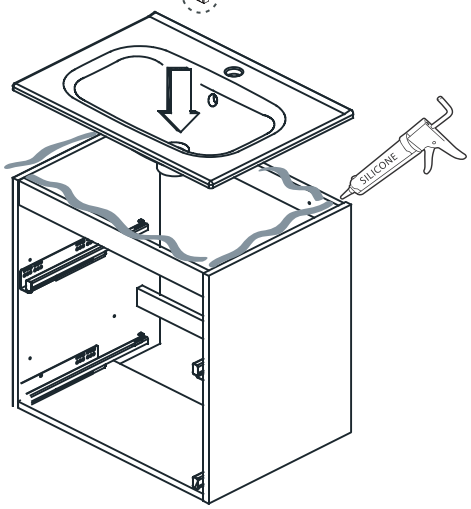
SILICONE

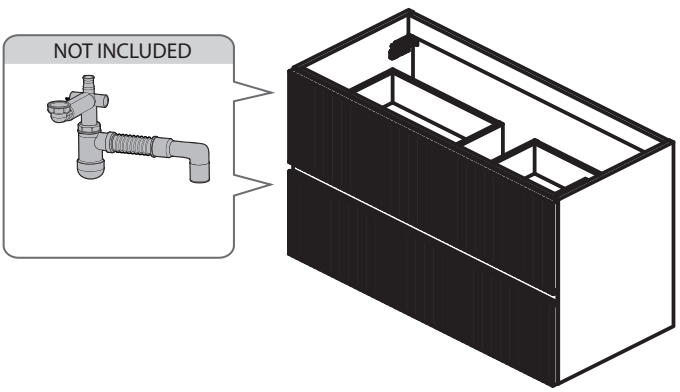
NOT INCLUDED

6

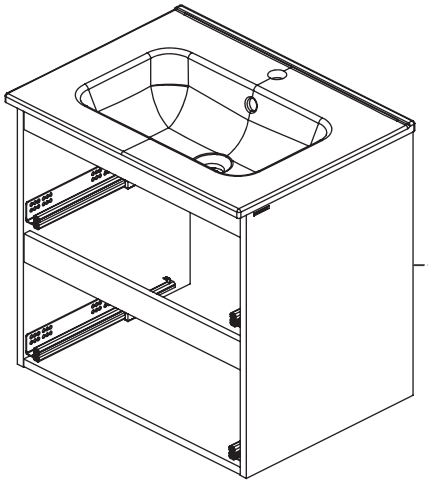

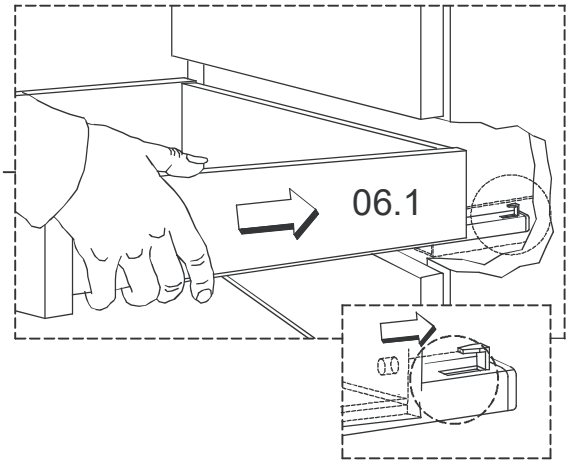

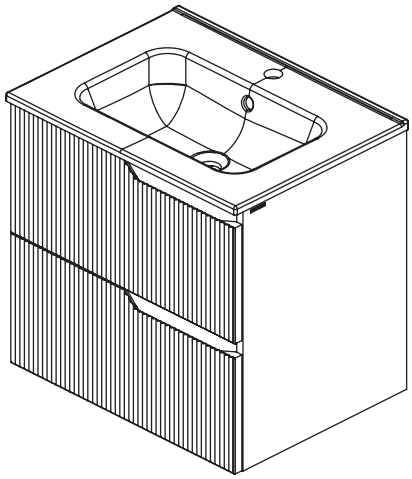

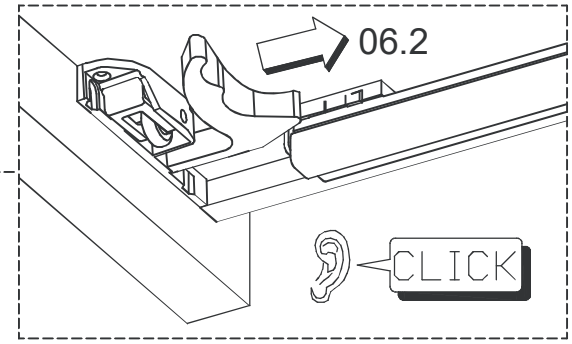

7

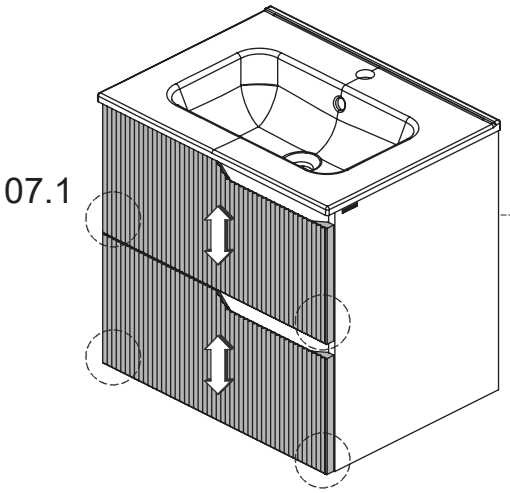

07.1

