New Energy Charging Module Connector

Brief introduction.

The module connector is also called the power hot-swap terminal and the cabinet connector, and is mainly used for the module power interface, the USB power interface, the server, the charging pile battery module and the like. The module connector contacts are made of high-strength, high-elasticity. The copper is used as the crown spring jack and the crown spring pin is gold-plated or silver-plated. The high dynamic contact is reliable. The plug is a crimping pin and the socket is a pin. Jack (can also be made into crimped form), with anti-blind insertion function, soft plugging and unplugging, small insertion and extraction force, low contact resistance, high load current and excellent electrical conductivity.

Module connector housing model:

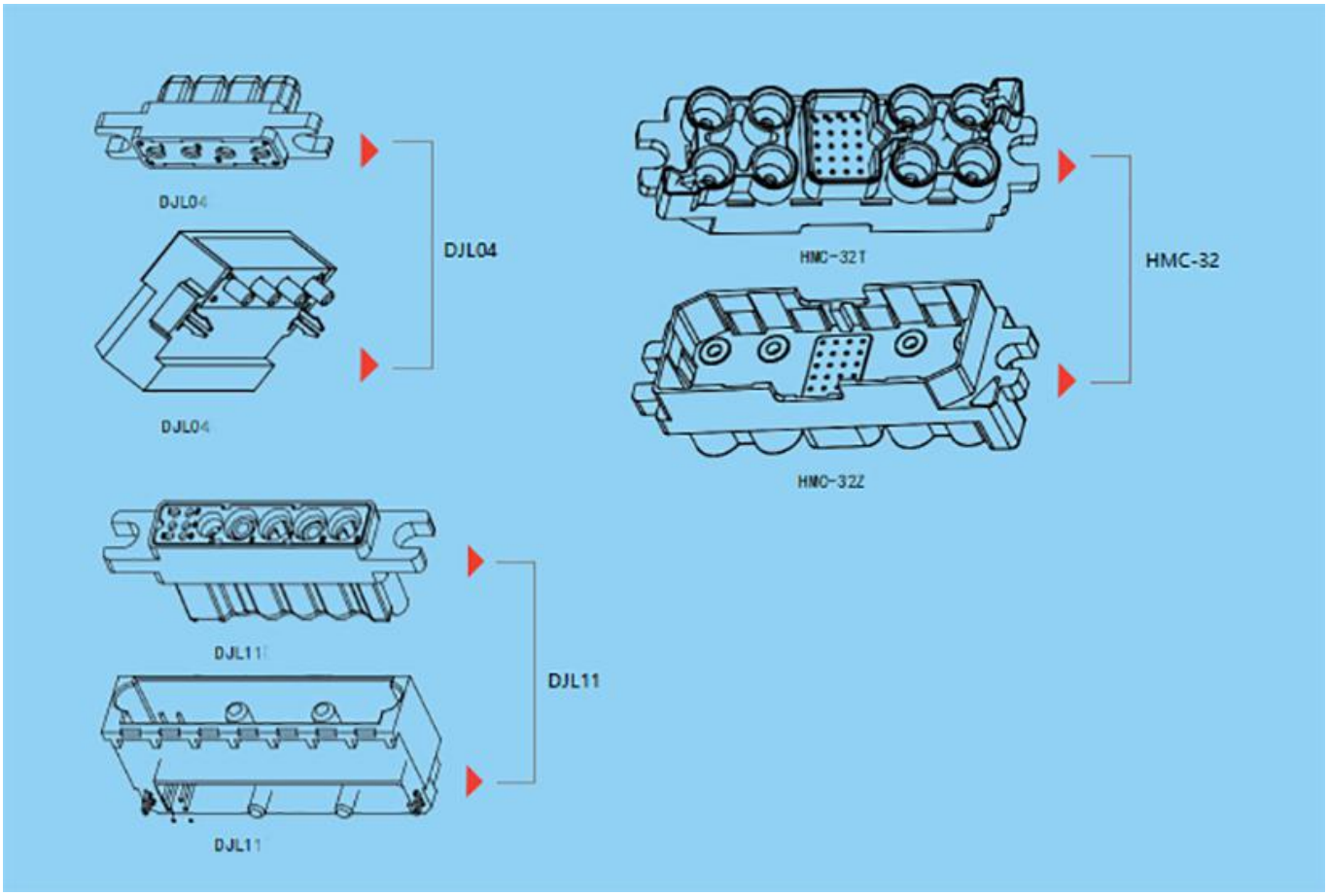

Module connector process using connector requirements, methods and precautions:

Installation form

1,The screw locking method is adopted between the product and the printed board. It is recommended to see the opening dimensions of the printed board as detailed information on each page (without tolerance of ±0.2; unit: mm):

Requirements for use of the connector (after assembly to the component)

2,Shape tolerance requirements, fit speed, force, etc. for plugs and sockets. The connector mounted to the panel is mated with the panel in the subrack, and the overall structure of the subrack should meet the mating requirements of the connector. The speed with the socket is recommended to be no more than 12 times/min. When working, it must be fully inserted into place when connecting with the socket, and no additional device is allowed between the plug and socket mating faces to avoid affecting the contact reliability of the connector.

DJL04 module connector:

The connector plug insulator has the function of preventing mis-insertion; when the plug and the socket are matched, the shell part is chamfered, and the pin and the front end of the jack are chamfered, and the multi-guide ensures that the plug and the seat have good after installation. Cooperate.

DJL04 module connector technical parameters:

1，the main performance indicators of the product:

Rated current:	12# pin (power supply): 35A
Rated voltage:	between power supply holes (1-4): 3500V (AC)
Contact resistance:	12# pin (power supply): ≤1.0 mΩ;
Insulation resistance:	≥3000MΩ
Mechanical life:	500 times
Vibration:	10Hz ~ 500Hz, acceleration 98m / s2,instantaneous break ≤1μs
impact:	peak acceleration 147m/s2, instantaneous break ≤1μs
Operating temperature:	-40°C～125°C
Operating humidity:	90% to 95% (40 ° C ± 2 ° C)

2， the main materials of the product:

Contact body: 12# jack (power supply): copper alloy (silver base back surface silver plated)

Insulator: PBT + 15% GF (UL94 V-0) black

Positioning claw: beryllium copper alloy (natural color)

DJL04 module connector package storage:

The product is placed in a small cell of a plastic tray, and then packaged in a box, and the product packaged in a box should have an ambient temperature of -10 ° C to 40 ° C, a relative humidity of 80% or less, and no acid or alkaline in the surrounding air. Or storage in the warehouse of other corrosive gases.

DJL04 opening size:

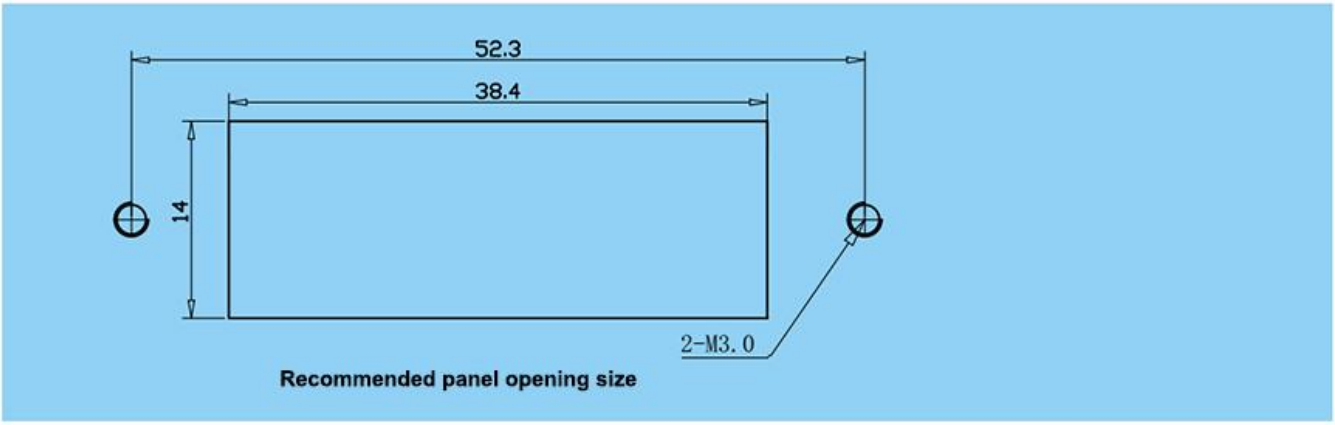

DJL04 module connector size chart：

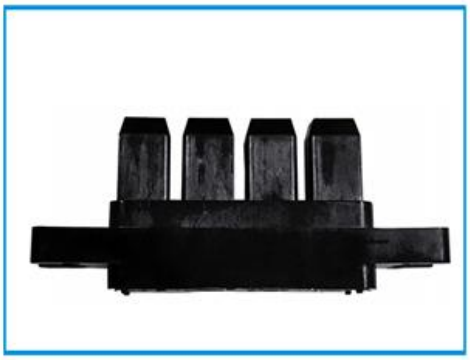

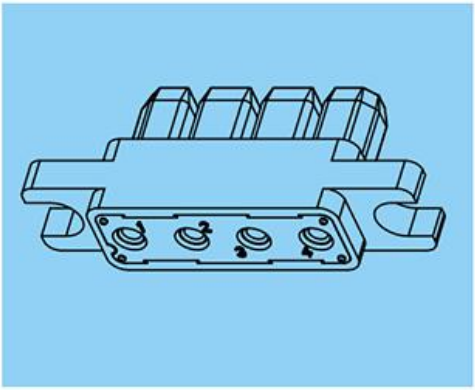

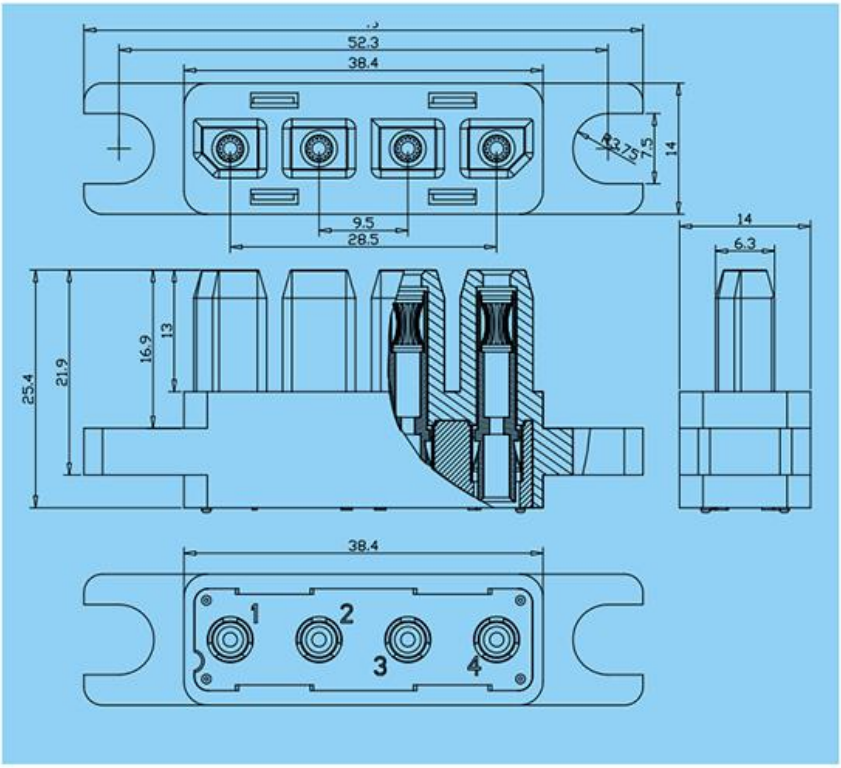

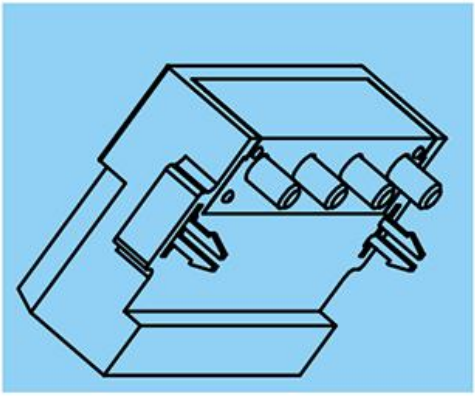

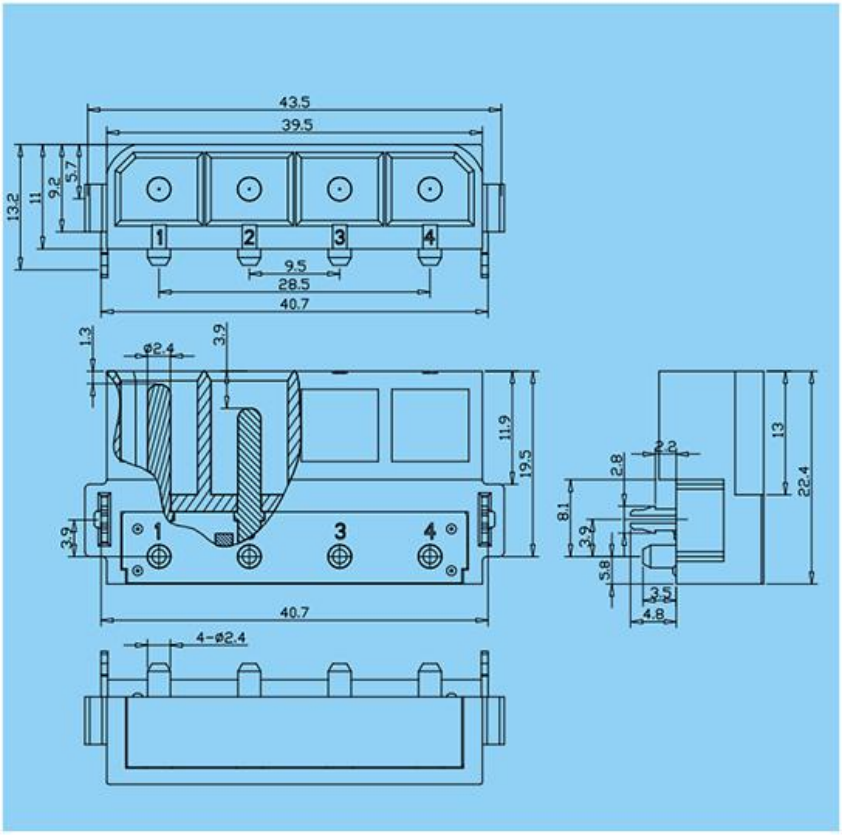

Detail

Specification		Power contact
		4 pin (some holes can be loaded without needle according to demand)
Rated current		35A
Contact resistance		1.0（1.6）mΩ
Withstand voltage		2000V/3000V
Surface treatment		Silver plated, nickel plated at the bottom
Termination form		Pin: plate pin B　　Jack: Crimp type Y, plate pin B, welded H
material	Pin, jack coat	Brass or copper alloy
	Crown spring	Bronze bronze
Insulation resistance		≥1000MΩ
Mechanical life		1000 Times
Housing material		PBT G30UL94V-0black

DJL11 module connector:

This connector complies with the corporate standard: Q/TM 178. The anti-missing function of the plug insulator; when the plug and the socket are matched, there is a chamfering guide of the outer casing part, and the chamfering guide of the front end of the pin and the jack itself, and the multiple guiding ensures that the plug and the seat have a good fit after installation.

DJL11 mode JL04 technical parameters:

1, the main performance indicators of the product:

Rated current:	12# pin (power supply): 35A 22# pin (signal): 3A
Rated voltage:	750V (DC)
Withstand voltage:	1200V (AC) between 3, 4, 5, and 6 holes, 2500V (AC) between 1,2,the hole and other holes 2500V (AC) between 9 and 11 holes
Contact resistance:	pin (#5): ≤0.5mΩ;Pin (22#): ≤12mΩ
Insulation resistance:	≥3000MΩ(normal)
Mechanical life:	500 times
Vibration:	10Hz ~ 500Hz, acceleration 98m / s2, instantaneous break ≤ 1μs
impact:	peak acceleration 147m / s2, instantaneous break ≤ 1μs
Operating temperature:	-40°C～125°C
Operating humidity:	90% to 95% (40 ° C ± 2 ° C)

2， the main materials of the product:

Contact body: 12# jack (power supply): copper alloy (silver base back surface silver plated)

Insulator: PBT + 15% GF (UL94 V-0) black

Positioning claw: beryllium copper alloy (natural color)

DJL11 module connector package storage:

The product is placed in a small compartment of the blister tray, and then packaged in a box, and the product packaged in a box should be at an ambient temperature of -10 ° C to 40 °C, the relative humidity is below 80%, and it is stored in the warehouse where there is no acid, alkaline or other corrosive gas in the surrounding air.

DJL11 opening size:

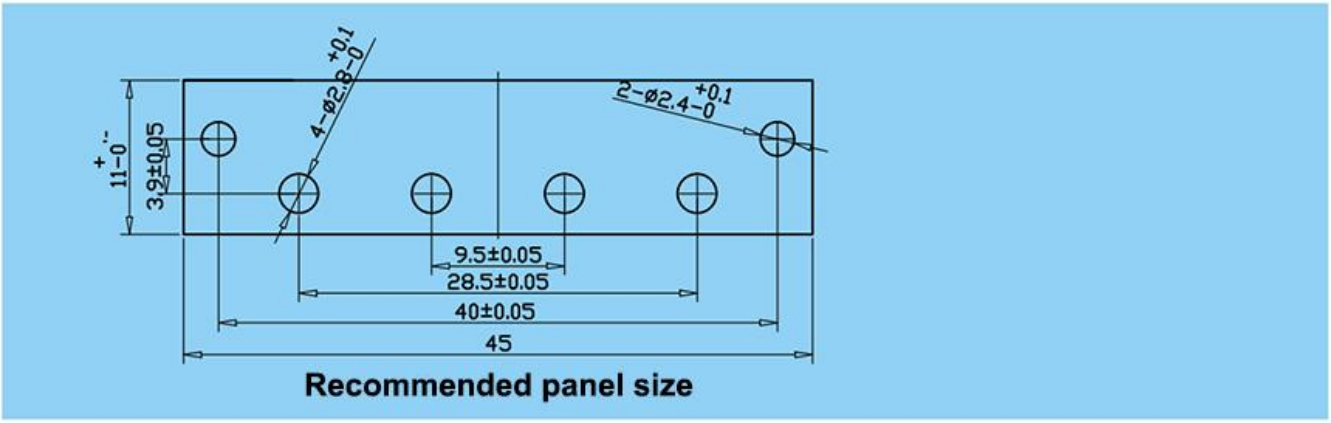

DJL11 module connector size chart：

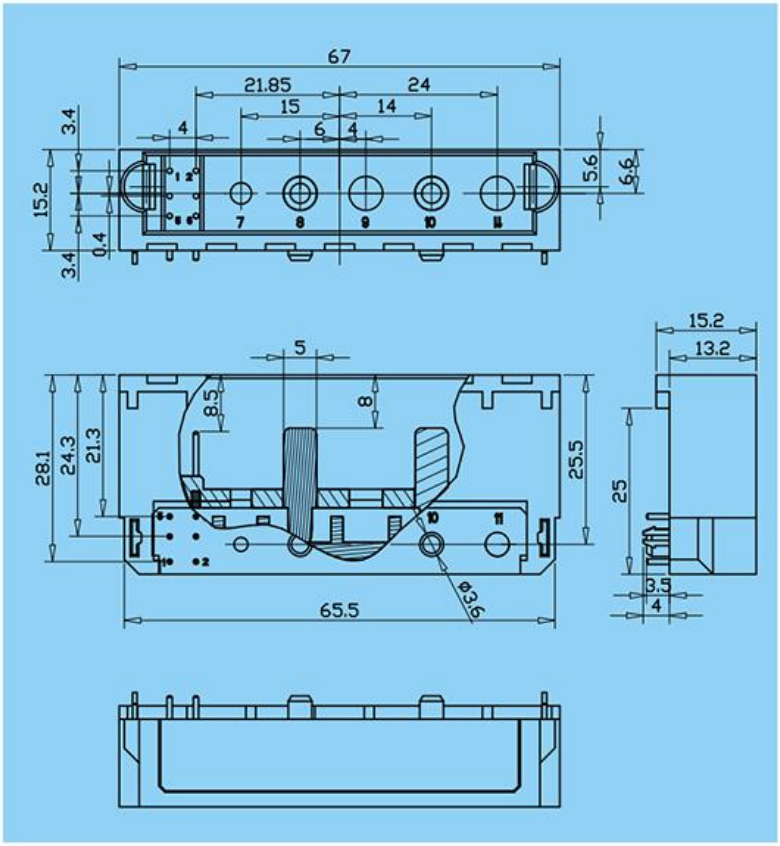

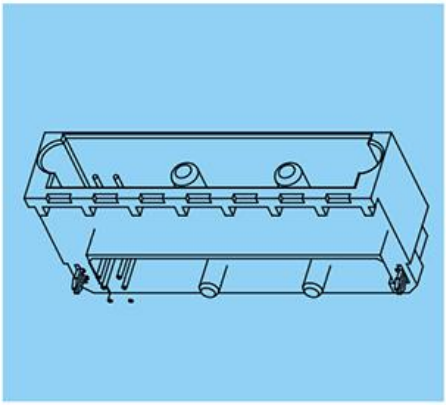

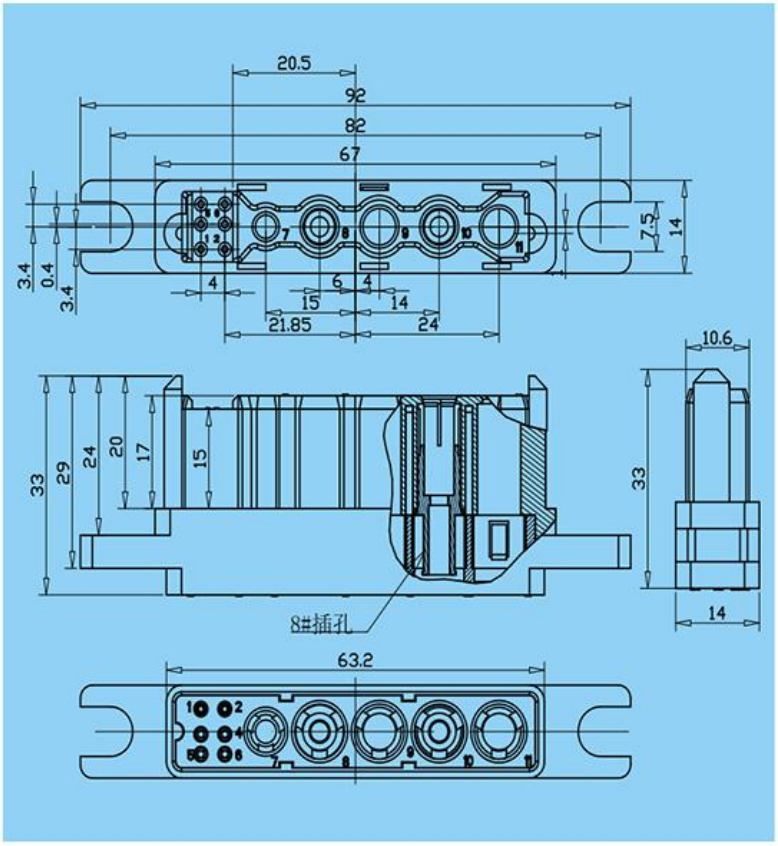

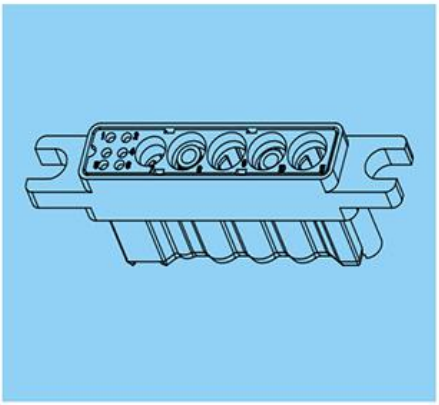

Detail

Specification		Power contact	
		1–6 pin (some holes can be loaded without needle according to demand)	7–11 pin
Rated current		5A	200A
Contact resistance		5.0（6.7）mΩ	0.01（0.013）mΩ
Withstand voltage		1000V	5000V
Surface treatment		Silver plated, nickel plated at the bottom	Silver plated, nickel plated at the bottom
Termination form		Pin: plate pin B Jack: Crimp type Y, plate pin B, welded H	
Material	Pin, jack coat	Brass or copper alloy	
	Crown spring	Bronze bronze	
Insulation resistance		≥3000MΩ	
Mechanical life		500 Times	
Housing material		PBT+15%GF（UL94 V-0）black	

HMC-32 module connector:

The connector plug insulator has anti-missing function; when the plug and the socket are mated, there is an error-proof setting of the outer casing part, and the pin and the front end of the jack are chamfered, and the multi-boot ensures that the plug and the seat have good after installation. Cooperate.

HMC-32 module technical parameters:

1，the main performance indicators of the product:

Rated current:	8# pin (power supply): 50A 22# pin (signal): 5A
Rated voltage:	between power supply hole position (1#~4#, 29#~32): 2500V (AC) signal hole position (5#~23#): 1500V (AC) Between the power supply and the signal hole: 1500V (AC)
Contact resistance:	8# pin (power supply): ≤1.0 mΩ; 22# pin (signal): ≤5.0 mΩ
Insulation resistance:	≥3000MΩ
Mechanical life:	500 times
Vibration:	10Hz ~ 500Hz, acceleration 98m / s2,instantaneous break ≤1μs
impact:	peak acceleration 147m/s2, instantaneous break ≤1μs
Operating temperature:	-40°C～125°C
Operating humidity:	90% to 95% (40 ° C ± 2 ° C)

2， the main materials of the product:

Contact body: 8# pin (power supply): copper alloy (silver base back surface silver plated) 22# pin (signal): copper alloy (gold plated back surface gold plated)

Insulator: PBT + 15% GF (UL94 V-0) black

HMC-32 module technical parameters:

HMC-32 mold package storage:The product is placed in a small cell of a plastic tray, and then packaged in a box, and the product packaged in a box should have an ambient temperature of -10 ° C to 40 ° C, a relative humidity of 80% or less, and no acid or alkaline in the surrounding air. Or storage in the warehouse of other corrosive gases.

HMC-32 opening size:

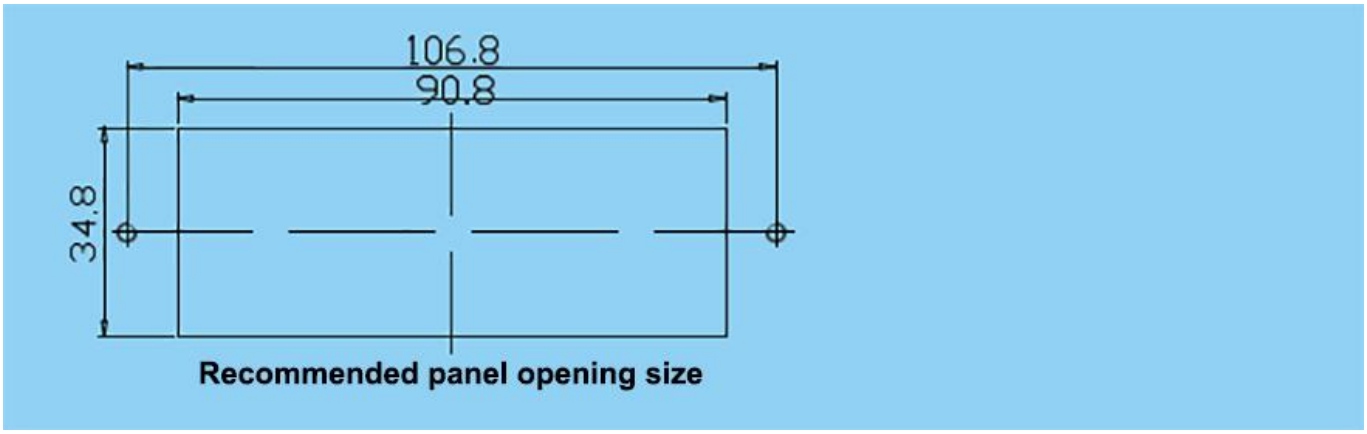

HMC-32 module connector male end dime

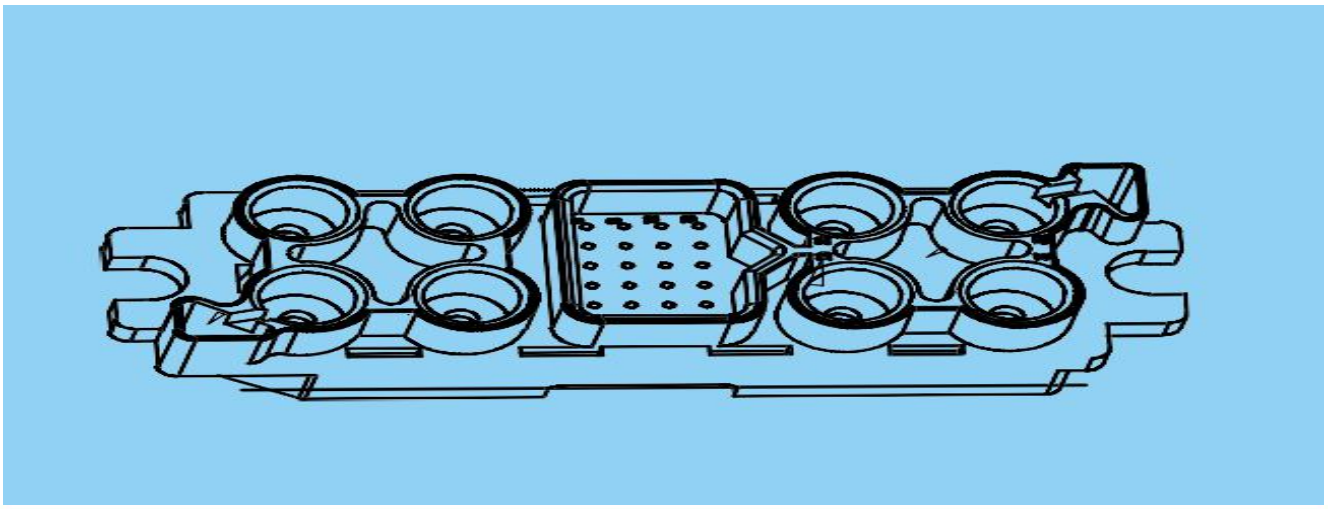

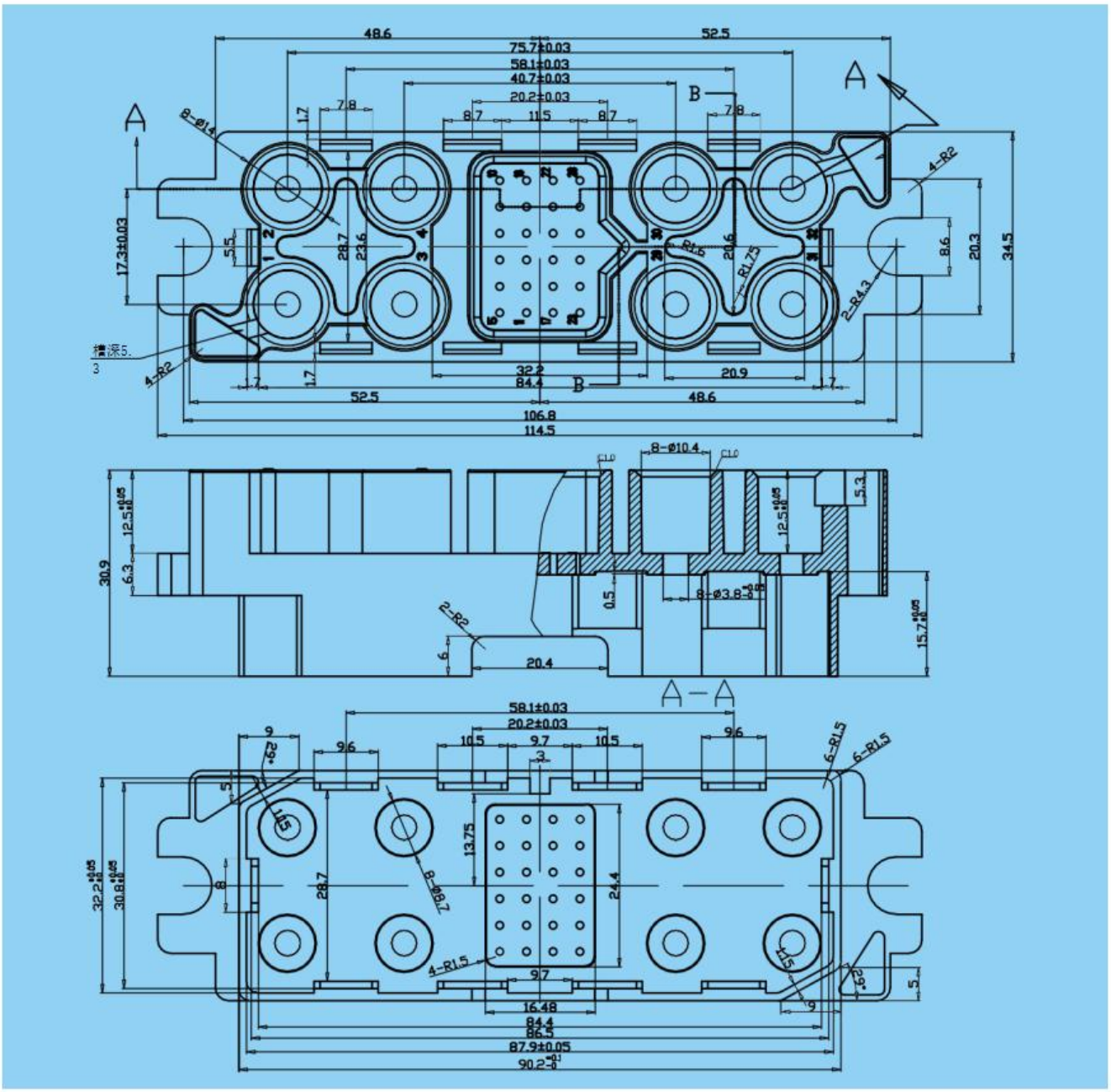

Email: ella_spring@vip.163.com Website:www.spring-connectors.com

HMC-32 module connector female end dimensions:

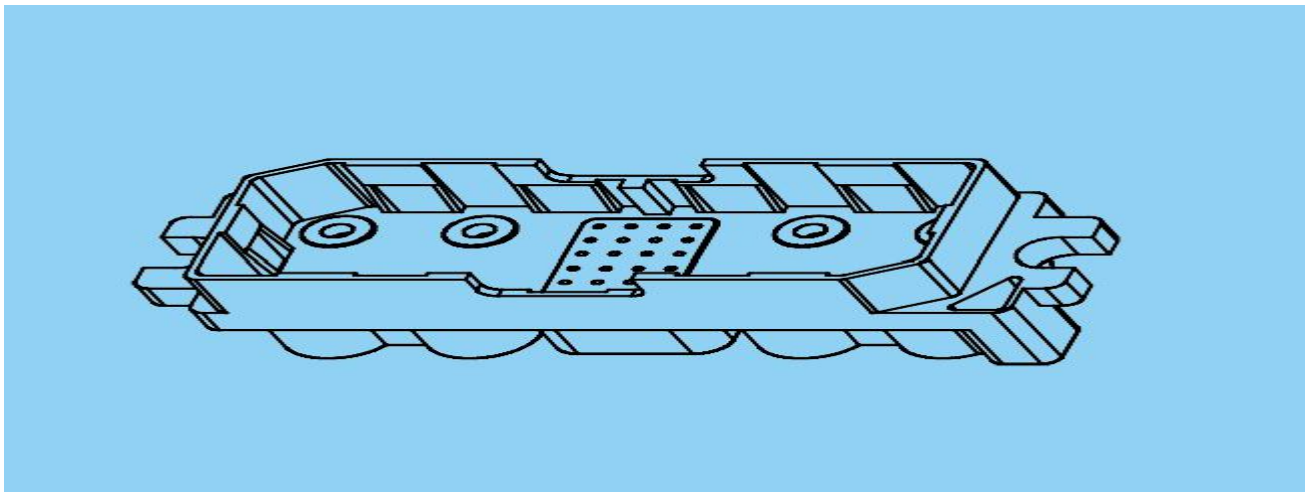

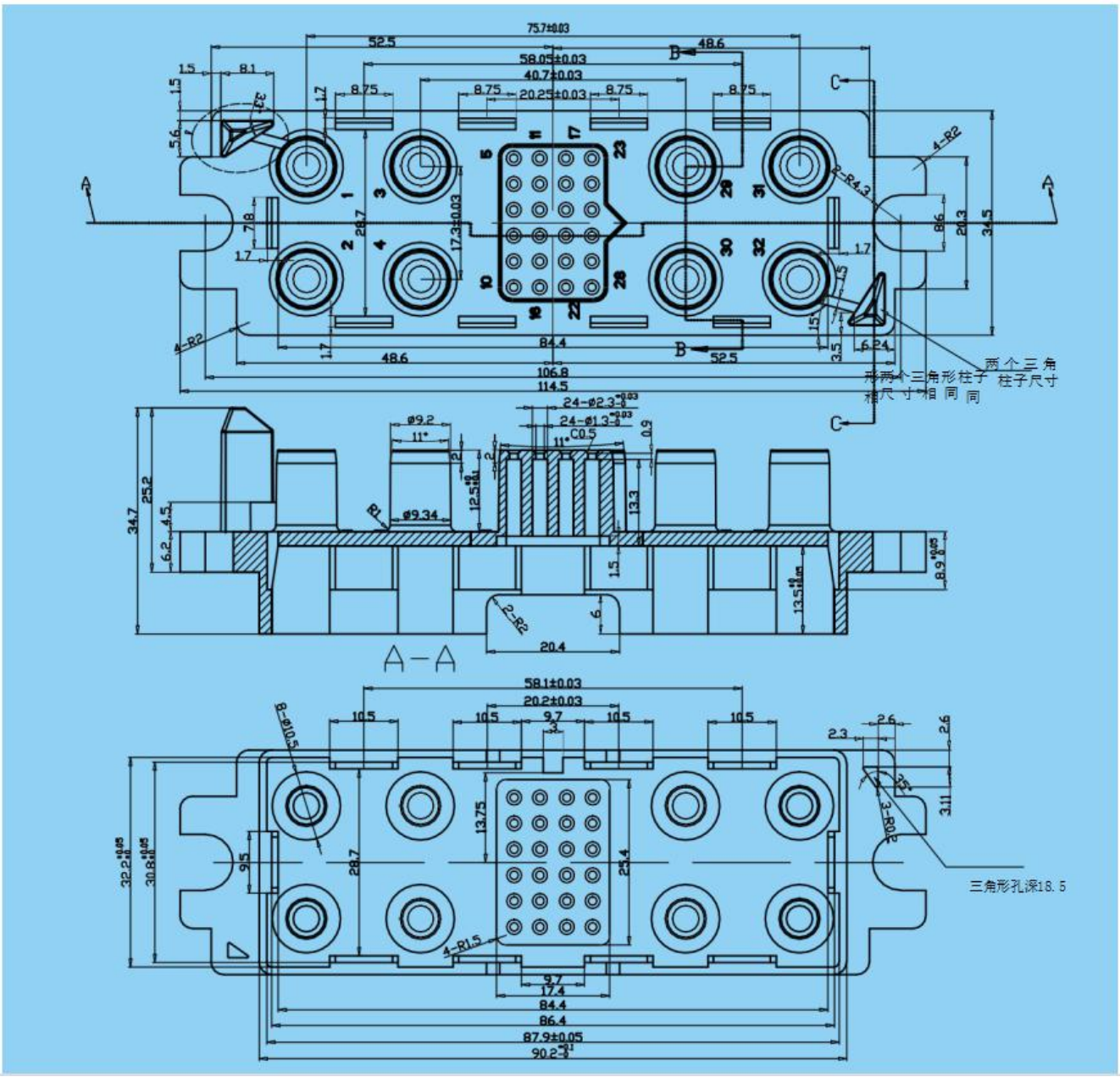

Detail

Specification		Power contact	
		5—27 pin (some holes can be loaded without needle according to demand)	1—4, 28—32 pin
Rated current		5A	50A
Contact resistance		5.0（6.7）mΩ	0.01（0.013）mΩ
Withstand voltage		1000V	5000V
Surface treatment		Silver plated, nickel plated at the bottom	Silver plated, nickel plated at the bottom
Termination form		Pin: plate pin B Jack: Crimp type Y, plate pin B, welded H	
Material	Pin, jack coat	Brass or copper alloy	
	Crown spring	Bronze bronze	
Insulation resistance		≥3000MΩ	
Mechanical life		500Times	
Housing material		PBT+15%GF（UL94 V-0）black	