LUCEVARIA

PENDANT

made in HOLLAND

INTER NOVA
PROFESSIONAL LIGHTING

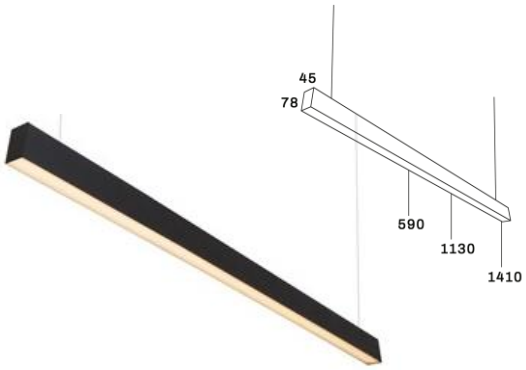

Net Weight	Dimensions carton L x W x H	Qty outer carton
On request	On request	On request

Housing	Aluminium, die cast
RAL colour	9004 (Black), 9003 (White), 9006 (Grey)
Fixture type	Pendant lighting
Module	Osram LED linear
Driver	Osram driver
Lumen output	570mm: 1500lm 1130mm: 3000lm 1410mm: 3850lm
CCT	3000K, 4000K
CRI	>80Ra
Beam angles	120°
Suspension length	300 cm (supplies with suspension kit)
Expected Lifetime	L80B10 >70.000 / L90B50 >50.000h
Photobiological safety	RG1 unlimited
Power factor	> 0.9
LOR	> 90%
Colour consistency	3 SDCM
Warranty	5 years warranty on LED module and driver

LED MODULES

Standard

OPTIONS

Dimmable DALI

Dimmable 1-10V

Casambi

LED MODULE OPTIONS

Description	Lumen	Watt	Lm/W	CCT	CRI	Description	Lumen	Watt	Lm/W	CCT	CRI
Osram LED linear	1500Lm	12W	133	830, 840	>80Ra						
Osram LED Linear	3000Lm	26W	115	830, 840	>80Ra						
Osram LED linear	3850Lm	30W	127	830, 840	>80Ra						

LED modules
Standard: CRI>80 and >90 in CCT 2700K, 3000K, 3500K, 4000K
Premium White (PW): for fresh white and depth of colour in retail environments
[1]) Lumen output of LED module (COB)
[2]) Mentioned wattage applies for the COB only. Mentioned wattage applies for the most efficient CCT.
The power of the complete fixture will be slightly higher due to the power consumption of the driver.
[3]) Values shown are average values and are subject to +/- 10% tolerance (set by international standards). The colour temperature is subject to a tolerance of up to +/- 150 Kelvin compared to the nominal value.
Technical data can be changed by Internova without prior notice.

It all starts with light