Northern Pacific Railway Company. Engineering Department Records.

Copyright Notice:

This material may be protected by copyright law (U.S. Code, Title 17). Researchers are liable for any infringement. For more information, visit www.mnhs.org/copyright.

Version 3
August 20, 2018

N. P. 1757
6-24

OFFICE OF CHIEF ENGINEER

FILE NO. 3505 - 3

SUBJECT:

Wood Preservatives

Osmoseplastic treatment timbers
Bridge 27.2, Snoqualmie Branch

From: 7-26-61

To:

Dry 24 6

3505
3

SPEED LETTER®

TO C. F. Intlekofer, BNI
Seattle, Wash
Attn: R. M Leslie

FROM G. F. Dalquist
St. Paul

SUBJECT file CE 3505-3

FOLD

MESSAGE

DATE 5-19 19 70

Herewith copies of Osmose Co.'s 1967 Creosoting report for Br 11, Berkley Line and Br 35 Snoqualmie Brand as per your request

SIGNED GFD

REPLY

DATE 19

FOLD

SIGNED

GrayLine "SNAP-A-WAY" FORM 44-902 3-PARTS
WILSON JONES COMPANY • © 1961 • PRINTED IN U. S. A.

SNAP-A-WAY AND RETAIN YELLOW COPY. SEND WHITE AND PINK COPIES WITH CARBON INTACT

3505

OFFICE OF
BRIDGE ENGINEER

JUN 3 1968

NORTHERN PACIFIC RY. CO.
ST. PAUL, MINN.

St. Paul, Minnesota
June 3, 1968

2-14

Mr. J. A. Gustafson:

In reference to your note of May 31 regarding the effectiveness of Avenarius Carbolineum in relation to its cost for field treatment of cut timber:

The Carbolineum is made from the higher boiler fractions of Creosote, mostly Anthracene, which is refined by removing some of the solid matter. Past tests have shown that the average Creosote brush treatment is equal to the Avenarius Carbolineum brush treatments.

The average cost of our Creosote is 25¢ a gallon. The cost of the Avenarius Carbolineum, depending on the volume purchased, is $1.60 to $2.15 per gallon or six to eight times the cost of our Creosote.

R.S. Zistler

RGZ:bm

Engineer of Timber Preservation

3505

CARBOLINEUM WOOD PRESERVING CO. INCORPORATED

AVENARIUS
MADE IN U.S.A.
CARBOLINEUM
TRADE MARKS REG. U.S. PAT. OFF

FUNGICIDE and INSECTICIDE
PRESERVES WOOD EVERYWHERE

MANUFACTURERS

Area Code 414
353-5040

6683 NORTH 40th STREET
MILWAUKEE, WISCONSIN 53209

Dear Sir:

The one best way to beat the high cost of maintenance of wood and timber structures, ties, cross-walks, pilings, adzings, cross-cuts, platforms, is applying AVENARIUS CARBOLINEUM. There are hundreds of other places where wood is used and should be given the preserving treatment only CARBOLINEUM can provide. Double and even triple the life of wood.

CARBOLINEUM comes ready for use, for on-the-job application by brush, spray or dip. No heating is necessary, and large coverage 100 to 200 square feet per-gallon makes for extremely low cost. Knock out rot and decay the CARBOLINEUM way.

CARBOLINEUM has been used by railroads, utilities, mines ... as a matter of fact by many corporate classifications for over 90 years.

The enclosed folder and price card should give you all of the information you require. Quantity prices are quoted on request, and immediate shipment is guaranteed. Order your requirements now. Telephone collect if urgent.

Sincerely,

Fred Leypold

Fred Leypold

CARBOLINEUM WOOD PRESERVING CO.

A Supplier to Industry for over
90 Years

VKD: Is this material any better than creosote to treat cuts & field drilling to treated timbers?

6/10/68

This looks as if it is the same results and about same expansion and about Creosote. See R.P.J. letter attached. Only advantage could be that cost is not required. If practice we only heat to cold creosote, even the least requirement to be most much & as likelihood. JAS

AVENARIUS *is the Inventor's Name*
The ARROW identifies the ORIGINAL and GENUINE CARBOLINEUM invented in 1876

U.S. REGISTRATIONS-CARBOLINEUM NO. 14048-AVENARIUS NO. 400890

3505

OFFICE OF
CHIEF ENGINEER
DEC 14 1967
NORTHERN PACIFIC RY. CO.
ST. PAUL, MINN.

Spokane, Washington
December 11, 1967

File: 282-1

Mr. D. H. Shoemaker:

Attached for your further handling is a copy of Manager Harwood's letter of December 6 relative to the use of Osmose Wood preservative on the Camas Prairie Railroad.

To my knowledge we have used this process on some Northern Pacific structures but such has only been for treatment of specific structures only. It is questionable if use of this process on the Camas Prairie Railroad would be advantageous.

It would be appreciated if you would furnish me your views relative to this matter.

District Engineer

Attachment

Ltr. To Note & To Furnish Comments
12/14

D.P.
J.N.B.
O.R.W.
W.D.O.
G.B.H.

Lewiston, Idaho
December 6, 1967

Mr. D. Peinovich:

Attached hereto is letter and literature from Mr. A. W. Fish, Area Engineer of Osmose Wood Preserving Co.

Perhaps you are familiar with their treating-in-place of timber in bridges and tunnels, and would appreciate your views and comments in this respect if such treating would be applicable to structures on the Camas Prairie.

Manager

Northern Pacific Railway Company
OFFICE OF
DEC 8 1967
DIST. ENGR.
SPOKANE, WASH.

OSMOSE RAILROAD DIVISION 4505 MONONA DRIVE / MADISON, WISCONSIN 53716 / 608 222-6800

205/645 Minoru Blvd.,
Richmond, B.C.,
Canada.

November 5, 1967.

Mr. J.H. Harwood,
Manager,
Camas Prairie Railroad Company,
13th and Main Sts.,
Lewiston, Idaho, 83501.

CAMAS PRAIRIE R. R. CO.
NOV - 7 1967
MANAGER'S OFFICE

Dear Mr. Harwood:

It was indeed a pleasure to meet you last Friday to discuss in-place preservative treatment of wooden bridges. I will be looking forward to further meetings.

In addition to contacts with local officers our people have also been meeting with system officers of your company's two parent roads. Mr. W.E. Dowling, System Bridge Engineer of the Union Pacific at Omaha and Mr. D.H. Shoemaker, Chief Engineer of the Northern Pacific at St. Paul are both familiar with our work on a system basis. You may wish to discuss the inspection and in-place preservative treatment of your wooden bridges with these two men.

As you requested, I am enclosing some literature for your own file. The reprint of Jack Williams' article in Progressive Railroading provides an outline of how our service has been adapted to the needs of the Rock Island. The reprint of December 1961 outlines the treatment of timber sets in a tunnel. I do not have an article on the treatment of multi-storey frame trestles but the techniques are very similar. We have treated some of these structures that were 115 feet high. Also enclosed is a copy of our standard boring diagram and the addenda to our contract form.

Under normal circumstances the cost of inspection and treatment is between 10 and 20% of replacement cost. Usually there has been no cost to the customer prior to the signing of the contract.

I would be most happy to assist you in developing a program adapted to the particular needs of your company.

Yours very truly,

A.W. Fish,
Area Engineer.

OSMOSE RAILROAD DIVISION 4505 MONONA DRIVE / MADISON, WISCONSIN 53716 / 608 222-6800

June 26, 1967

OFFICE OF
CHIEF ENGINEER

JUN 27 1967

NORTHERN PACIFIC RY. CO.
ST. PAUL, MINN.

Mr. D. H. Shoemaker, Chief Engineer
Northern Pacific Railway Company
176 E. 5th Street
St. Paul, Minnesota 55101

Dear Mr. Shoemaker:

Under date of June 6, 1967, we submitted a detailed cruising report of Bridge 11, Buckley Line, near Enumclaw, Washington.

As a result of that cruising, we estimate 75% of the piles have measurable internal voids and 5% will require posting or replacement.

Enclosed are our recommendations and a firm price proposal covering inspection and in-place preservative treatment.

The proposed work will locate all internal voids, pinpoint any reject members, and stop the annual loss of wood strength to decay. Service records to date prove that you can expect a minimum of fifteen years extension of anticipated service life with negligible maintenance.

In our opinion, Bridge 11 is an excellent subject for in-place preservative treatment and we hope to be of service.

Very truly yours,

John W. Storer

John W. Storer
Vice President

JWS:ef
Enc.
CC: Mr. R. G. Brohaugh
Art Fish

AGREEMENT

Made and executed in duplicate by and between OSMOSE WOOD PRESERVING CO. OF AMERICA, INC. of Buffalo 9, New York, a business corporation organized under the laws of the State of New York, hereinafter called CONTRACTOR and

NORTHERN PACIFIC RAILWAY COMPANY

a corporation organized under the laws of the State of

hereinafter called OWNER.

Contractor and Owner, for and in consideration of the covenants hereinafter contained, mutually agree as follows:

1. Contractor is to furnish all supervision, labor, tools, equipment, and material necessary or required for the inspection and preservative treatment of Owner's bridge structure #11 located at Buckley, Washington.

2. Contractor shall apply its inspection and treatment method as designated under Section 5 and in accordance with Addendum A, Specifications, attached.

3. Owner shall furnish Contractor with blueprints showing the structure which is to be inspected and treated.

4. Contractor shall record all inspection and treatment data on Contractor's standard report forms. One copy of each report sheet shall be furnished at the end of the work to the Owner.

5. Owner and Contractor agree that the inspection and treatment includes those structural members which are designated below by an "X". "O" indicates optional.

____ Guard Rail

____ Ties

____ Under decking

____ Stringers – Internal Only_____ Internal and External_____ Flooding Top Only_____

_X_ Caps – * Internal Only__X__ (35 each sub caps only) Internal and External_____ Flooding Top Only _____

_X_ Piling * – above ground – Internal Only__X__ Internal and External _____

____ Piling – ground level to 24" below – Internal Only_____ Internal and External_____

Excavation and backfill by Owner's forces? Yes _____ No _____

____ Bracing

____ Retaining Wall

____ OsmoWeld (epoxy resin) Wood Replacer Compound to be used for – Reanchoring Drift Pin_____

Shimming_____ Other _____

_O_ Piling - Externally flood large checks.

____ * Including posts, caps, intermediates and sills of two (2) each frame bents.

6. Owner agrees to pay, and Contractor agrees to accept as full compensation for such work performed and materials used, the following price:

BASIC: Forty thousand nine hundred ten dollars ($40,910.)

OPTIONAL: Externally flood large checks - $8.00 per pile.

The above price proposal shall remain in effect until August 15, 1967

7. Owner shall pay for such work in the manner following: At the end of each calendar month, Contractor shall prepare and furnish Owner with an estimate of the proportion of work completed during the said period, and the amount due. Owner shall pay Contractor the amount due on or before thirty (30) days following such presentation. Payments so made by Owner during the progress of the work shall not constitute a final acceptance of the work but shall be subject to adjustment after final inspection by Owner.

8. Contractor shall commence the work within sixty days (60) days after receiving written notice from Owner.

9. Either party hereto may end this contract upon thirty (30) days written notice served upon the other party by registered mail. After such thirty (30) day period all work hereunder shall cease. Such notice may be addressed to Owner at

and to Contractor at 980 Ellicott Street, Buffalo 9, New York. Upon such termination, Owner shall pay Contractor for all work performed, in accordance with the terms of this contract, on or before thirty (30) days following termination of the work and receipt of final billing.

10. Contractor shall do all work in a safe, efficient, good and workmanlike manner with its own equipment, according to its own methods, all of which equipment shall belong to and be and remain in the exclusive charge and control of Contractor, and not subject to control or supervision by owner. Owner does not by this contract hire or rent such equipment or assume any liability or responsibility for the use or method of use of same.

11. Contractor shall promptly pay all wages due its employees, and secure all licenses and permits required by law, and shall comply with all ordinances, laws, orders, rules, directives and regulations pertaining to such work made by any governmental authority or regulatory body.

12. Prior to commencement of contract Contractor shall furnish Owner with required Insurance Certificates showing Workmen's Compensation, Public Liability and Property Damage coverage.

13. Any of the terms of this agreement shall not be changed, waived, superseded, or supplemented, except in writing signed by the parties hereto.

IN WITNESS WHEREOF, the parties hereto have caused this contract to be executed in duplicate by persons duly authorized to do so and their corporate seals to be hereunto affixed on the day below written.

OSMOSE WOOD PRESERVING CO. OF AMERICA, INC.

Dated: _____ Contractor

(Seal)

Attest: _____ By _____

Dated: _____ Owner

(Seal)

Attest: _____ By _____

ADDENDUM A

Specifications for Inspection and Treatment of Bridge and Structures

In recognition of the fact that the decay pattern of standing timber is affected by whether or not timber is primarily in contact with the earth or air, separate and different techniques and materials are to be used as follows:

I. ABOVE GROUND PORTION OF STRUCTURE

(1) Inspection borings are to be made in locations as indicated on attached Diagram 140.27a and as many additional borings as needed to define extent of internal decay. The preservative material shall be applied under pressure to saturation, after which bored hole shall be plugged with treated dowel.

(2) External treatment of designated timber members shall be to fiber saturation with particular attention to checks, bolt hole areas and other surface openings.

(3) The preservative shall be 24-12,* a fire retardant material composed of volatile liquid chlorinated hydrocarbons and petroleum solvent containing the amount of pentachlorophenol equivalent to 5% by weight solution in normal petroleum solvent.

II. BELOW GROUND PORTION OF STRUCTURE

(1) Ground surrounding pilings shall be excavated to depth of 24", exposed area sounded and bored, all decay removed from exterior and evaluated for strength in relation to load prior to rejection or treatment.

(2) Where internal cavities are located preservative solution shall be applied internally to refusal prior to plugging all bored holes with treated plugs.

(3) External treatment shall comprise application of Osmoplastic, a patented thixotropic gel wood preserving compound, to that area of wood from 22" below ground level to 3" above. Osmoplastic consists of approximately 50% by weight of the toxic chemicals sodium fluoride, dinitrophenol, potassium bichromate and pentachlorophenol in a coal tar vehicle. Treated area shall be covered with Osmo Shield to prevent leaching of the toxic chemicals into the surrounding ground. OsmoShield is a kraft-backed polyethylene film 20" in width.

(4) Excavated pilings shall be backfilled in such a manner as not to allow depressions that could be caused by future settling of the earth.

III. SPECIFICATIONS COVERING OPTIONAL WORK – As attached.

* A 5% by weight solution of OsmoBor preservative (sodium borate equivalent to 5.2% anhydrous Borax) may be used internally in lieu of 24-12 on that portion of the structure over or adjacent to water.

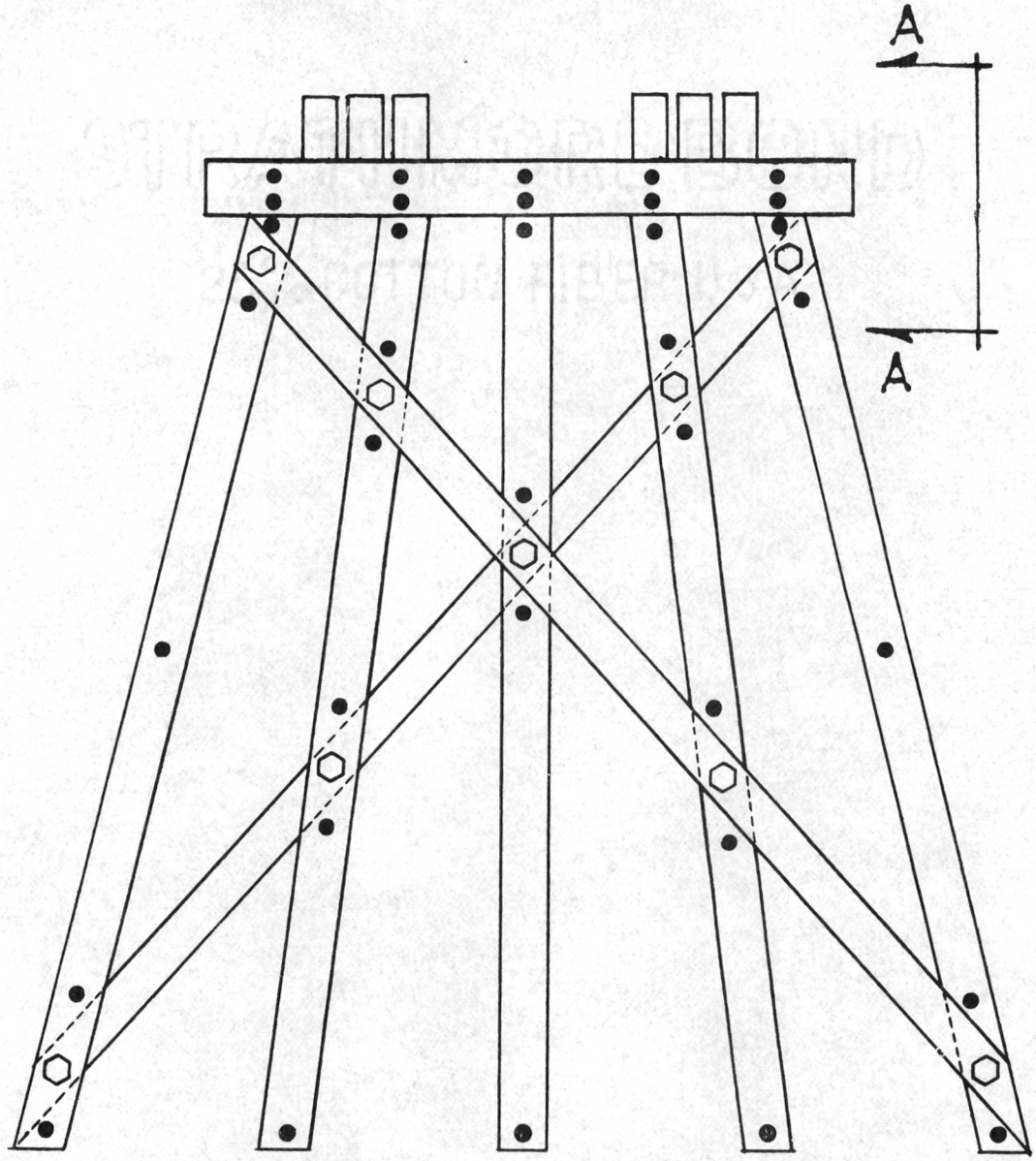

PLAN

SCALE 1/4" = 1'-0"

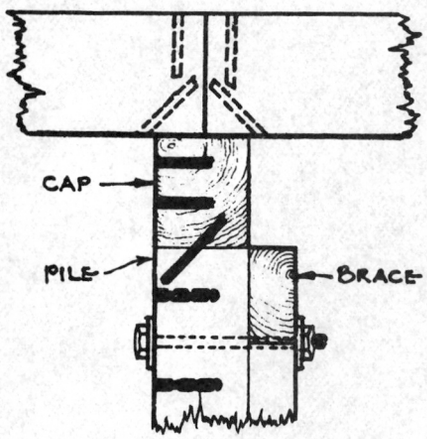

SECTION "A-A"

SCALE 1/2" = 1'-0"

NOTE: ON OPEN DECK BRIDGES, WHERE REQUIRED, STRINGERS ARE BORED FROM TOP AT 3' INTERVALS.

STANDARD BORING DIAGRAM

OSMOSE WOOD PRESERVING CO. of AMERICA

RAIL ROAD DIVISION

● STANDARD BORE LOCATIONS
10" AVERAGE BORE DEPTH
3/8" BORE DIAMETER
⬡ BOLTS

© 1962 Osmose Wood Preserving Co. of America, Inc.

AGREEMENT

Made and executed in duplicate by and between OSMOSE WOOD PRESERVING CO. OF AMERICA, INC. of Buffalo 9, New York, a business corporation organized under the laws of the State of New York, hereinafter called CONTRACTOR and

NORTHERN PACIFIC RAILWAY COMPANY

a corporation organized under the laws of the State of

hereinafter called OWNER.

Contractor and Owner, for and in consideration of the covenants hereinafter contained, mutually agree as follows:

1. Contractor is to furnish all supervision, labor, tools, equipment, and material necessary or required for the inspection and preservative treatment of Owner's bridge structure #11 located at Buckley, Washington.

2. Contractor shall apply its inspection and treatment method as designated under Section 5 and in accordance with Addendum A, Specifications, attached.

3. Owner shall furnish Contractor with blueprints showing the structure which is to be inspected and treated.

4. Contractor shall record all inspection and treatment data on Contractor's standard report forms. One copy of each report sheet shall be furnished at the end of the work to the Owner.

5. Owner and Contractor agree that the inspection and treatment includes those structural members which are designated below by an "X". "O" indicates optional.

____ Guard Rail

____ Ties

____ Under decking

____ Stringers – Internal Only_____ Internal and External_____ Flooding Top Only_____

X Caps * – Internal Only X (35 each sub caps only) Internal and External_____ Flooding Top Only _____

X Piling* – above ground – Internal Only X Internal and External _____

____ Piling – ground level to 24" below – Internal Only_____ Internal and External_____

Excavation and backfill by Owner's forces? Yes _____ No _____

____ Bracing

____ Retaining Wall

____ OsmoWeld (epoxy resin) Wood Replacer Compound to be used for – Reanchoring Drift Pin_____

Shimming_____ Other _____

O Piling - Externally flood large checks.

____ * Including posts, caps, intermediates and sills of two (2) each frame bents.

6. Owner agrees to pay, and Contractor agrees to accept as full compensation for such work performed and materials used, the following price:

BASIC: Forty thousand nine hundred ten dollars ($40,910.)

OPTIONAL: Externally flood large checks - $8.00 per pile.

The above price proposal shall remain in effect until August 15, 1967

7. Owner shall pay for such work in the manner following: At the end of each calendar month, Contractor shall prepare and furnish Owner with an estimate of the proportion of work completed during the said period, and the amount due. Owner shall pay Contractor the amount due on or before thirty (30) days following such presentation. Payments so made by Owner during the progress of the work shall not constitute a final acceptance of the work but shall be subject to adjustment after final inspection by Owner.

8. Contractor shall commence the work within sixty days (60) days after receiving written notice from Owner.

9. Either party hereto may end this contract upon thirty (30) days written notice served upon the other party by registered mail. After such thirty (30) day period all work hereunder shall cease. Such notice may be addressed to Owner at

and to Contractor at 980 Ellicott Street, Buffalo 9, New York. Upon such termination, Owner shall pay Contractor for all work performed, in accordance with the terms of this contract, on or before thirty (30) days following termination of the work and receipt of final billing.

10. Contractor shall do all work in a safe, efficient, good and workmanlike manner with its own equipment, according to its own methods, all of which equipment shall belong to and be and remain in the exclusive charge and control of Contractor, and not subject to control or supervision by owner. Owner does not by this contract hire or rent such equipment or assume any liability or responsibility for the use or method of use of same.

11. Contractor shall promptly pay all wages due its employees, and secure all licenses and permits required by law, and shall comply with all ordinances, laws, orders, rules, directives and regulations pertaining to such work made by any governmental authority or regulatory body.

12. Prior to commencement of contract Contractor shall furnish Owner with required Insurance Certificates showing Workmen's Compensation, Public Liability and Property Damage coverage.

13. Any of the terms of this agreement shall not be changed, waived, superseded, or supplemented, except in writing signed by the parties hereto.

IN WITNESS WHEREOF, the parties hereto have caused this contract to be executed in duplicate by persons duly authorized to do so and their corporate seals to be hereunto affixed on the day below written.

OSMOSE WOOD PRESERVING CO. OF AMERICA, INC.

Dated: _____ Contractor

(Seal)

Attest: _____ By _____

Dated: _____ Owner

(Seal)

Attest: _____ By _____

ADDENDUM A

Specifications for Inspection and Treatment of Bridge and Structures

In recognition of the fact that the decay pattern of standing timber is affected by whether or not timber is primarily in contact with the earth or air, separate and different techniques and materials are to be used as follows:

I. ABOVE GROUND PORTION OF STRUCTURE

(1) Inspection borings are to be made in locations as indicated on attached Diagram 140.27a and as many additional borings as needed to define extent of internal decay. The preservative material shall be applied under pressure to saturation, after which bored hole shall be plugged with treated dowel.

(2) External treatment of designated timber members shall be to fiber saturation with particular attention to checks, bolt hole areas and other surface openings.

(3) The preservative shall be 24-12,* a fire retardant material composed of volatile liquid chlorinated hydrocarbons and petroleum solvent containing the amount of pentachlorophenol equivalent to 5% by weight solution in normal petroleum solvent.

II. BELOW GROUND PORTION OF STRUCTURE

(1) Ground surrounding pilings shall be excavated to depth of 24", exposed area sounded and bored, all decay removed from exterior and evaluated for strength in relation to load prior to rejection or treatment.

(2) Where internal cavities are located preservative solution shall be applied internally to refusal prior to plugging all bored holes with treated plugs.

(3) External treatment shall comprise application of Osmoplastic, a patented thixotropic gel wood preserving compound, to that area of wood from 22" below ground level to 3" above. Osmoplastic consists of approximately 50% by weight of the toxic chemicals sodium fluoride, dinitrophenol, potassium bichromate and pentachlorophenol in a coal tar vehicle. Treated area shall be covered with Osmo Shield to prevent leaching of the toxic chemicals into the surrounding ground. OsmoShield is a kraft-backed polyethylene film 20" in width.

(4) Excavated pilings shall be backfilled in such a manner as not to allow depressions that could be caused by future settling of the earth.

III. SPECIFICATIONS COVERING OPTIONAL WORK – As attached.

* A 5% by weight solution of OsmoBor preservative (sodium borate equivalent to 5.2% anhydrous Borax) may be used internally in lieu of 24-12 on that portion of the structure over or adjacent to water.

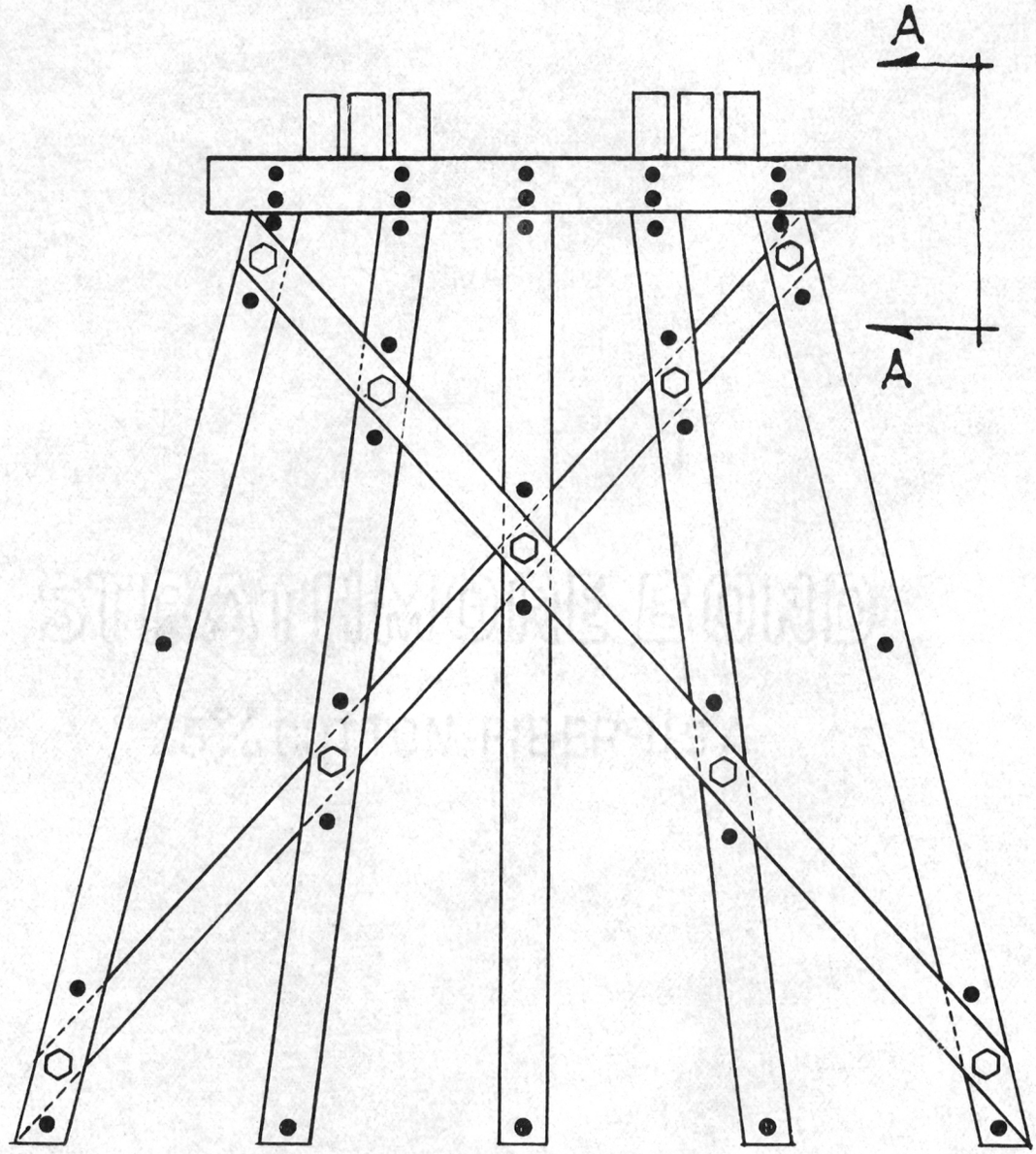

PLAN

SCALE 1/4" = 1'-0"

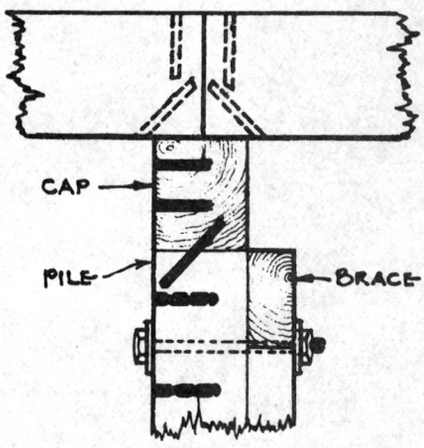

SECTION "A-A"

SCALE 1/2" = 1'-0"

STANDARD BORING DIAGRAM

OSMOSE WOOD PRESERVING CO. of AMERICA

RAILROAD DIVISION

● STANDARD BORE LOCATIONS
10" AVERAGE BORE DEPTH
3/8" BORE DIAMETER
⬡ BOLTS

NOTE: ON OPEN DECK BRIDGES, WHERE REQUIRED, STRINGERS ARE BORED FROM TOP AT 3' INTERVALS.

©1962 Osmose Wood Preserving Co. of America, Inc.

3505

OSMOSE WOOD PRESERVING CO. of AMERICA, Inc.

980 ELLICOTT STREET, BUFFALO, NEW YORK 14209 — AREA CODE 716 882-5905
Railroad Division
4505 Monona Drive, Madison, Wisconsin 53716

June 6, 1967

OFFICE OF
CHIEF ENGINEER
JUN 7 1967
NORTHERN PACIFIC RY. CO.
ST. PAUL, MINN.

Mr. D. H. Shoemaker, Chief Engineer
Northern Pacific Railway
176 E. 5th Street
St. Paul, Minnesota 55101

Dear Mr. Shoemaker:

As requested in your letter of April 19, arrangements were made with Mr. R. G. Brohaugh, District Engineer at Seattle, to cruise Bridge 11, Buckley Line, near Enumclaw, Washington. This was completed on May 24 and our detailed boring record obtained during cruising is attached for your file.

In cruising Bridge 11, each of the 672 piles were hammer sounded up 8' and those sounding suspicious were power bored and evaluated. In addition, approximately every 10th bent was climbed full length and each pile in the bent was bored at 6 to 10' intervals.

As a result of this detailed inspection, we estimate 75% of the piles have measurable internal voids and 5% will require posting or replacement. In our opinion, this bridge is an excellent subject for in-place preservative treatment.

To permit a valid economic study, we are preparing detailed recommendations and a firm price proposal for your consideration. This will include inspection and treatment of all piles, two frame bents, and 32 timber sub caps. Since a considerable number of piles were noted with large checks extending through the original treated shell, we plan to include external flooding of large checks on a per pile basis and priced optional. If you have any suggestions, additions, or deletions to the scope of work outlined, please advise.

Regarding Bridge 35, Snoqualmie Line, this was cruised in the same manner as Bridge 11, and only one pile was found with internal decay -- Pile 6 Bent 45. This structure is in excellent condition and is obviously not a candidate for in-place treatment. Our boring record is enclosed for your file.

Bridge 8, Orting Branch, was not cruised since the local B&B force was not able to remove the metal cladding, to permit proper inspection, prior to arrival of our cruising team.

The extreme differential in decay conditions of Bridge 11 and Bridge 35 emphasize the importance of cruising in our work. On the basis of age, Bridge 35 would be expected to have more decay than Bridge 11, yet the opposite is true.

We appreciate this opportunity to be of service and will forward a proposal on Bridge 11 for your consideration in the near future.

Very truly yours,

John W. Storer
Vice President

JWS:ef
Enc.
CC: Mr. R. G. Brohaugh

©1967 Pole Sprayers, Inc.
Printed in U.S.A.

Note Reverse for P.P.

OSMOSE WOOD PRESERVING CO.
OF AMERICA, INC.

140.24b

SHEET 1 of 31 SHEETS

RAILROAD BRIDGE DIVISION
BORING RECORD

Date May 22-24, 1967

Owner NORTHERN PACIFIC RAILWAY COMPANY Bridge No. 11

Line, Branch, Subdivision BUCKLEY LINE

Location 1 mi. north of Buckley, Wash., just east of Highway 410.

Type: (~~Pile~~) (Frame) (~~Open~~ Deck) (Ballast Deck) (Other) _____ Age 1936

BENT	PILES PER BENT	PILE	PILE HT.	BORED AT	SHELL	VOID	90° SHELL	90° VOID	H	REMARKS	PILE DIA.	PX or X	POST HT. O/W	G/L TREAT	PP
1	5	1	4	D/P	Sound					Wooden sub cap	14				
				+½	Sound										
		2		G/L	Sound										
		3		D/P	5	¼				Contacted drift pin					
				D/P	3½	½									
		4		D/P	Sound										
				G/L	5	2¼									
		5		D/P	4¼	½									
				G/L	6½	¾									
2	5	1	10	G/L	Sound						14				
		4		G/L	Sound										
3	5	1	22	D/P	2	9¾	1	10			14	X ~~PX~~			
				G/L	Sound										
		4		D/P	4	7	8	1							
				G/L	1	8	1½	9				X			
		5		D/P	1¼	7¾	5	4							
4	6	1	34	D/P	1	12	¾	12			16	X			
				22	2	8	1	10							
				1	Sound										

SYMBOLS All Borings In Inches and Fractions to nearest ¼".

H – Heart
X – Reject
V – Void
SR – Shell Rot
RS – Ring Separation
DR – Decay Ring
DP – Decay Pocket
PP – Previously Posted
PX – Possible Reject
ST – Shell Thickness
P/W – Heavy Duty Pile Wrap
O/W – OsmoWeld
D/P – Drift Pin
G/L – Groundline Area

Bents Numbered From N ~~S~~ E W
Piling Numbered From N S E ~~W~~
Bent # 1 Is N ~~S~~ E W
(Timetable)

SIGNED _____

©1967 Pole Sprayers, Inc.
Printed in U.S.A.

OSMOSE WOOD PRESERVING CO.
OF AMERICA, INC.

140.24b

SHEET 2 of 31 SHEETS

RAILROAD BRIDGE DIVISION
BORING RECORD

Date May 22-24, 1967

Owner NORTHERN PACIFIC Bridge No. 11

Line, Branch, Subdivision BUCKLEY LINE

Location

Type: (~~Pile~~) (Frame) (~~Open~~ Deck) (Ballast Deck) (Other) Age 19 36

BENT	PILES PER BENT	PILE	PILE HT.	BORED AT	SHELL	VOID	90° SHELL	90° VOID	H	REMARKS	PILE DIA.	PX or X	POST HT. O/W	G/L TREAT	PP
4 C	6	1 C	34	G/L	Sound						16				
		6		D/P	2	10	2	10			16	X			
				31	Sound										
5	6	1	42	D/P	2½	3					16				
		6		D/P	3	9	3	9½	3						
6	6	1	47	D/P	2¼	3½	2½	8			16				
				41	Sound										
		2		D/P	Sound										
		5		D/P	5	3	2	6							
				41	Sound										
		6		D/P	2	3	3	4							
				44	2¼	1½									
				37	Sound										
7	6	1	50	D/P	7½	4	8	2			16				
		2		D/P	8	1	8¼	1							
		3		D/P	Sound										
		4		D/P	Sound										
		5		D/P	Sound										
		6		D/P	Sound		7½	1							

SYMBOLS All Borings In Inches and Fractions to nearest ¼".

H – Heart
X – Reject
V – Void
SR – Shell Rot
RS – Ring Separation
DR – Decay Ring
DP – Decay Pocket
PP – Previously Posted
PX – Possible Reject
ST – Shell Thickness
P/W – Heavy Duty Pile Wrap
O/W – OsmoWeld
D/P – Drift Pin
G/L – Groundline Area

Bents Numbered From N ~~S~~ E W
Piling Numbered From N S E ~~W~~
Bent # 1 Is N ~~S~~ E W
(Timetable)

SIGNED

©1967 Pole Sprayers, Inc.
Printed in U.S.A.

OSMOSE WOOD PRESERVING CO. OF AMERICA, INC.

140.24b

SHEET 3 of 31 SHEETS

RAILROAD BRIDGE DIVISION
BORING RECORD

Date May 22-24, 1967

Owner NORTHERN PACIFIC Bridge No. 11

Line, Branch, Subdivision BUCKLEY LINE

Location

Type: ~~(Pile)~~ (Frame) (~~Open~~ Deck) (Ballast Deck) (Other) Age 1936

BENT	PILES PER BENT	PILE	PILE HT.	BORED AT	SHELL	VOID	90° SHELL	90° VOID	H	REMARKS	PILE DIA.	PX or X	POST HT. O/W	G/L TREAT	PP
7 C	6	6 C	50	40	5½	4					16				
8	6	2	52	D/P	2¾	8½	3	4			15				
		4		D/P	3	5	3	5½			16				
		6		D/P	2½	9	5	3½			16				
9	6		54							None drilled	16				
10	6	1	56	D/P	Sound						17				
				46	2	10	2½	7				PX			
				G/L	Sound										
		2		D/P	3½	3									
				50	Sound										
				46	Sound										
				1	Sound										
		3		D/P	7½	½	Sound								
				50	Sound										
				46	Sound										
				4	Sound										
				G/L	Sound										
		4		D/P	Sound		Sound				17				
				52	Sound										

SYMBOLS All Borings In Inches and Fractions to nearest ¼".

H – Heart
X – Reject
V – Void
SR – Shell Rot
RS – Ring Separation
DR – Decay Ring
DP – Decay Pocket
PP – Previously Posted
PX – Possible Reject
ST – Shell Thickness
P/W – Heavy Duty Pile Wrap
O/W – OsmoWeld
D/P – Drift Pin
G/L – Groundline Area

Bents Numbered From N ~~S~~ E W
Piling Numbered From N S E ~~W~~
Bent # 1 Is N ~~S~~ E W
(Timetable)

SIGNED

©1967 Pole Sprayers, Inc.
Printed in U.S.A.

OSMOSE WOOD PRESERVING CO. OF AMERICA, INC.

140.24b

SHEET 4 of 31 SHEETS

RAILROAD BRIDGE DIVISION
BORING RECORD

Date May 22-24, 1967

Owner NORTHERN PACIFIC Bridge No. 11

Line, Branch, Subdivision BUCKLEY LINE

Location

Type: (~~Pile~~) (Frame) (Open ~~Deck~~) (Ballast Deck) (Other) Age 19 36

BENT	PILES PER BENT	PILE	PILE HT.	BORED AT	SHELL	VOID	90° SHELL	90° VOID	H	REMARKS	PILE DIA.	PX or X	POST HT. O/W	G/L TREAT	PP
10 C	6	4 C	56	46	Sound						17				
				2	Sound										
				G/L	Sound										
		5		D/P	6	1/2	Sound								
				48	Sound										
				5	Sound										
				G/L	Sound										
		6		D/P	5 1/2	6 1/2	2	8	2		17				
				55	5 1/2	6 1/2									
				50	3	4 1/2	3 1/2	7 1/2							
				46	5	6	5 3/4	5			15				
				1	Sound										
				G/L	Sound										
11	6		58							None drilled	16				
12	6		60							None drilled	16				
13	6		62							None drilled	16				
14	6		62							Wood sub cap None drilled	16				
15	6		62							None drilled	16				
16	6		62							None drilled	16				

SYMBOLS All Borings In Inches and Fractions to nearest 1/4".

H – Heart
X – Reject
V – Void
SR – Shell Rot
RS – Ring Separation
DR – Decay Ring
DP – Decay Pocket
PP – Previously Posted
PX – Possible Reject
ST – Shell Thickness
P/W – Heavy Duty Pile Wrap
O/W – OsmoWeld
D/P – Drift Pin
G/L – Groundline Area

Bents Numbered From N ~~S~~ E W
Piling Numbered From N S E ~~W~~
Bent # 1 Is N ~~S~~ E W
(Timetable)

SIGNED

©1967 Pole Sprayers, Inc.
Printed in U.S.A.

OSMOSE WOOD PRESERVING CO. OF AMERICA, INC.

140.24b

SHEET 5 of 31 SHEETS

RAILROAD BRIDGE DIVISION
BORING RECORD

Date May 22-24, 1967

Owner NORTHERN PACIFIC Bridge No. 11

Line, Branch, Subdivision BUCKLEY LINE

Location

Type: (Pile) (Frame) (Open Deck) (Ballast Deck) (Other) Age 1936

BENT	PILES PER BENT	PILE	PILE HT.	BORED AT	SHELL	VOID	90° SHELL	90° VOID	H	REMARKS	PILE DIA.	PX or X	POST HT. O/W	G/L TREAT	PP
17	6		62							None drilled	16				
18	6		62							None drilled	16				
19	6		62							None drilled	16				
20	6	1	62	D/P	2	3			3		17				
				52	Sound										
				40	Sound										
				28	Sound										
				16	Sound										
				3	Sound										
				G/L	Sound										
		2		D/P	4	7					16				
				52	5	2					15				
				40	Sound					Severe checking					
				28	Sound										
				16	Sound										
				3	Sound										
				G/L	Sound										
		3		D/P	Sound										
				52	Sound										

SYMBOLS All Borings In Inches and Fractions to nearest ¼".

H – Heart
X – Reject
V – Void
SR – Shell Rot
RS – Ring Separation
DR – Decay Ring
DP – Decay Pocket
PP – Previously Posted
PX – Possible Reject
ST – Shell Thickness
P/W – Heavy Duty Pile Wrap
O/W – OsmoWeld
D/P – Drift Pin
G/L – Groundline Area

Bents Numbered From N S E W
Piling Numbered From N S E W
Bent # 1 Is N S E W
(Timetable)

SIGNED

©1967 Pole Sprayers, Inc.
Printed in U.S.A.

OSMOSE WOOD PRESERVING CO. OF AMERICA, INC.

140.24b

SHEET 6 of 31 SHEETS

RAILROAD BRIDGE DIVISION
BORING RECORD

Date May 22-24, 1967

Owner NORTHERN PACIFIC Bridge No. 11

Line, Branch, Subdivision BUCKLEY LINE

Location

Type: (P~~X~~e) (Frame) (Open ~~Deck~~) (Ballast Deck) (Other) Age 1936

BENT	PILES PER BENT	PILE	PILE HT.	BORED AT	SHELL	VOID	90° SHELL	90° VOID	H	REMARKS	PILE DIA.	PX or X	POST HT. O/W	G/L TREAT	PP
20 C	6	3 C	62	40	Sound						16				
				28	Sound										
				16	8	1					13				
				G/L	Sound										
		4		D/P	Sound										
				52	Sound										
				40	Sound										
				28	Sound										
				16	Sound										
				G/L	Sound										
		5		D/P	3½	8					17				
				52	6	3					16				
				40	Sound										
				28	Sound										
				16	7¾	1					13				
				5	Sound										
				G/L	Sound										
		6		D/P	Sound										
				52	Sound										

SYMBOLS All Borings In Inches and Fractions to nearest ¼".

H – Heart
X – Reject
V – Void
SR – Shell Rot
RS – Ring Separation
DR – Decay Ring
DP – Decay Pocket
PP – Previously Posted
PX – Possible Reject
ST – Shell Thickness
P/W – Heavy Duty Pile Wrap
O/W – OsmoWeld
D/P – Drift Pin
G/L – Groundline Area

Bents Numbered From N ~~S~~ E W
Piling Numbered From N S E W
Bent # 1 Is N ~~S~~ E W
(Timetable)

SIGNED

©1967 Pole Sprayers, Inc.
Printed in U.S.A.

OSMOSE WOOD PRESERVING CO. OF AMERICA, INC.

140.24b

SHEET 7 of 31 SHEETS

RAILROAD BRIDGE DIVISION
BORING RECORD

Date May 22-24, 1967

Owner NORTHERN PACIFIC Bridge No. 11

Line, Branch, Subdivision BUCKLEY LINE

Location

Type: (Pile) (Frame) (Open Deck) (Ballast Deck) (Other) Age 1936

BENT	PILES PER BENT	PILE	PILE HT.	BORED AT	SHELL	VOID	90° SHELL	90° VOID	H	REMARKS	PILE DIA.	PX or X	POST HT. O/W	G/L TREAT	PP
C 20	6	C 6	62	40	Sound						16				
				28	Sound										
				16	Sound										
				1	Sound										
				G/L	Sound										
21	6	1	62	6	2	9					12				
				5	2	7									
				4	1½	8						X			
				3	3	6									
				2	2	7									
22	6	1	62	3	Sound						12				
				1	Sound										
		2		2	Sound										
		4		2	Sound										
23	6		62							None drilled	16				
24	6		62							None drilled	16				
25	6		62							None drilled	16				
26	6		62							None drilled	16				
27	6		62							None drilled	16				

SYMBOLS All Borings In Inches and Fractions to nearest ¼".

H – Heart
X – Reject
V – Void
SR – Shell Rot
RS – Ring Separation
DR – Decay Ring
DP – Decay Pocket
PP – Previously Posted
PX – Possible Reject
ST – Shell Thickness
P/W – Heavy Duty Pile Wrap
O/W – OsmoWeld
D/P – Drift Pin
G/L – Groundline Area

Bents Numbered From N S E W
Piling Numbered From N S E W
Bent # 1 Is N S E W
(Timetable)

SIGNED

©1967 Pole Sprayers, Inc.
Printed in U.S.A.

OSMOSE WOOD PRESERVING CO. OF AMERICA, INC.

140.24b

SHEET 8 of 31 SHEETS

RAILROAD BRIDGE DIVISION
BORING RECORD

Date May 22-24, 1967

Owner NORTHERN PACIFIC Bridge No. 11

Line, Branch, Subdivision BUCKLEY LINE

Location

Type: (~~Pile~~) (Frame) (Open ~~Deck~~) (Ballast Deck) (Other) Age 1936

BENT	PILES PER BENT	PILE	PILE HT.	BORED AT	SHELL	VOID	90° SHELL	90° VOID	H	REMARKS	PILE DIA.	PX or X	POST HT. O/W	G/L TREAT	PP
										Wooden sub-cap					
28	6		62							None drilled	16				
29	6		62								16				
30	6	1	62	D/P	9	1/2					18				
				52	Sound										
				40	Sound										
				28	Sound										
				16	4	1					13				
				4	Sound										
				G/L	Sound										
		2		D/P	Sound										
				52	Sound										
				40	Sound										
				28	Sound										
				16	Sound										
				5	Sound										
				G/L	Sound										
		3		D/P	6	1					16				
				52	Sound										
				40	Sound										

SYMBOLS All Borings In Inches and Fractions to nearest ¼".

H – Heart
X – Reject
V – Void
SR – Shell Rot
RS – Ring Separation
DR – Decay Ring
DP – Decay Pocket
PP – Previously Posted
PX – Possible Reject
ST – Shell Thickness
P/W – Heavy Duty Pile Wrap
O/W – OsmoWeld
D/P – Drift Pin
G/L – Groundline Area

Bents Numbered From N ~~S~~ E W
Piling Numbered From N S E ~~W~~
Bent # 1 Is N ~~S~~ E W
(Timetable)

SIGNED

©1967 Pole Sprayers, Inc.
Printed in U.S.A.

OSMOSE WOOD PRESERVING CO.
OF AMERICA, INC.

140.24b

SHEET 9 of 31 SHEETS

RAILROAD BRIDGE DIVISION
BORING RECORD

Date May 22-24, 1967

Owner NORTHERN PACIFIC Bridge No. 11

Line, Branch, Subdivision BUCKLEY LINE

Location

Type: (~~Pile~~) (Frame) (Open ~~Deck~~) (Ballast Deck) (Other) Age 19 36

BENT	PILES PER BENT	PILE	PILE HT.	BORED AT	SHELL	VOID	90° SHELL	90° VOID	H	REMARKS	PILE DIA.	PX or X	POST HT. O/W	G/L TREAT	PP
30 C	6	3 C	62	28	Sound						16				
				16	Sound										
				3	Sound										
				G/L	Sound										
		4		D/P	Sound						16				
				52	Sound										
				40	Sound										
				28	Sound										
				16	Sound										
				4	Sound										
				G/L	Sound										
		5		D/P	Sound						16				
				52	Sound										
				40	Sound										
				28	Sound										
				16	Sound										
				5	Sound										
				G/L	Sound										
		6		D/P	2	3					16				

SYMBOLS All Borings In Inches and Fractions to nearest ¼".

H – Heart
X – Reject
V – Void
SR – Shell Rot
RS – Ring Separation
DR – Decay Ring
DP – Decay Pocket
PP – Previously Posted
PX – Possible Reject
ST – Shell Thickness
P/W – Heavy Duty Pile Wrap
O/W – OsmoWeld
D/P – Drift Pin
G/L – Groundline Area

Bents Numbered From N ~~S~~ E W
Piling Numbered From N S E ~~W~~
Bent # 1 Is N ~~S~~ E W
(Timetable)

SIGNED

©1967 Pole Sprayers, Inc.
Printed in U.S.A.

OSMOSE WOOD PRESERVING CO. OF AMERICA, INC.

140.24b

SHEET 10 of 31 SHEETS

RAILROAD BRIDGE DIVISION
BORING RECORD

Date May 22-24, 1967

Owner NORTHERN PACIFIC Bridge No. 11

Line, Branch, Subdivision BUCKLEY LINE

Location

Type: (~~Pile~~) (Frame) (Open ~~Deck~~) (Ballast Deck) (Other) Age 19 36

BENT	PILES PER BENT	PILE	PILE HT.	BORED AT	SHELL	VOID	90° SHELL	90° VOID	H	REMARKS	PILE DIA.	PX or X	POST HT. O/W	G/L TREAT	PP
30 C	6	6 C	62	52	Sound						16				
				40	Sound										
				28	Sound										
				16	Sound										
				G/L	Sound										
31	6	1	62	1	Sound						16				
		2		5	Sound										
32	6	1	62	1	Sound						16				
		5		2	Sound										
33	6		62							None drilled	16				
34	6	1	62	1	4	3½	4½	3½			16				
		2		2	Sound					Very wet inside					
35	6		62							None drilled	16				
36	6	1	62	1	Sound						16				
		2		2	Sound										
		4		2	Sound										
37	6	1	62	2	Sound						16				
		6		4	Sound										
38	6	1	62	2	Sound						16				

SYMBOLS All Borings In Inches and Fractions to nearest ¼".

H – Heart
X – Reject
V – Void
SR – Shell Rot
RS – Ring Separation
DR – Decay Ring
DP – Decay Pocket
PP – Previously Posted
PX – Possible Reject
ST – Shell Thickness
P/W – Heavy Duty Pile Wrap
O/W – OsmoWeld
D/P – Drift Pin
G/L – Groundline Area

Bents Numbered From N ~~S~~ E W
Piling Numbered From N S E ~~W~~
Bent # 1 Is N ~~S~~ E W
(Timetable)

SIGNED

©1967 Pole Sprayers, Inc.
Printed in U.S.A.

OSMOSE WOOD PRESERVING CO. OF AMERICA, INC.

140.24b

SHEET 11 of 31 SHEETS

RAILROAD BRIDGE DIVISION
BORING RECORD

Date May 22-24, 1967

Owner NORTHERN PACIFIC Bridge No. 11

Line, Branch, Subdivision BUCKLEY LINE

Location

Type: (~~P~~le) (Frame) (Ope~~n~~ Deck) (Ballast Deck) (Other) Age 19 36

BENT	PILES PER BENT	PILE	PILE HT.	BORED AT	SHELL	VOID	90° SHELL	90° VOID	H	REMARKS	PILE DIA.	PX or X	POST HT. O/W	G/L TREAT	PP
C 38	6	6	62	1	Sound						16				
39	6	6	62	5	1½	3½					16				
				4	1	3	1	7½				PX			
				2	Sound										
40	6	1	62	D/P	Sound						16				
				52	Sound										
				40	5	1									
				28	Sound										
				16	Sound										
				G/L	Sound										
		2		D/P	Sound										
				52	Sound										
				40	Sound										
				28	Sound										
				16	4	6					12¼	PX			
				G/L	Sound										
		3		D/P	Sound										
				52	Sound										
				40	Sound										

SYMBOLS All Borings In Inches and Fractions to nearest ¼".

- H – Heart
- X – Reject
- V – Void
- SR – Shell Rot
- RS – Ring Separation
- DR – Decay Ring
- DP – Decay Pocket
- PP – Previously Posted
- PX – Possible Reject
- ST – Shell Thickness
- P/W – Heavy Duty Pile Wrap
- O/W – OsmoWeld
- D/P – Drift Pin
- G/L – Groundline Area

Bents Numbered From N ~~S~~ E W
Piling Numbered From N S E ~~W~~
Bent # 1 Is N ~~S~~ E W
(Timetable)

SIGNED

©1967 Pole Sprayers, Inc.
Printed in U.S.A.

OSMOSE WOOD PRESERVING CO. OF AMERICA, INC.

140.24b

SHEET 12 of 31 SHEETS

RAILROAD BRIDGE DIVISION
BORING RECORD

Date May 22-24, 1967

Owner NORTHERN PACIFIC Bridge No. 11

Line, Branch, Subdivision BUCKLEY LINE

Location

Type: (~~Pile~~) (Frame) (Open ~~Deck~~) (Ballast Deck) (Other) Age 1936

BENT	PILES PER BENT	PILE	PILE HT.	BORED AT	SHELL	VOID	90° SHELL	90° VOID	H	REMARKS	PILE DIA.	PX or X	POST HT. O/W	G/L TREAT	PP
C 40	6	C 3	62	28	Sound										
				16	Sound										
				2	5¼	¾									
				G/L	Sound										
		4		D/P	2	1					17				
				52	Sound										
				40	Sound										
				28	Sound										
				16	Sound										
				G/L	Sound										
		5		D/P	Sound						16				
				52	Sound										
				40	Sound										
				28	Sound										
				16	Sound										
				G/L	4	2									
		6		D/P	1½	4			5½		17				
				52	Sound										
				40	Sound										

SYMBOLS All Borings In Inches and Fractions to nearest ¼".

H – Heart
X – Reject
V – Void
SR – Shell Rot
RS – Ring Separation
DR – Decay Ring
DP – Decay Pocket
PP – Previously Posted
PX – Possible Reject
ST – Shell Thickness
P/W – Heavy Duty Pile Wrap
O/W – OsmoWeld
D/P – Drift Pin
G/L – Groundline Area

Bents Numbered From N ~~S~~ E W
Piling Numbered From N S E ~~W~~
Bent # 1 Is N ~~S~~ E W
(Timetable)

SIGNED

©1967 Pole Sprayers, Inc.
Printed in U.S.A.

OSMOSE WOOD PRESERVING CO. OF AMERICA, INC.

140.24b

SHEET 13 of 31 SHEETS

RAILROAD BRIDGE DIVISION
BORING RECORD

Date May 22-24, 1967

Owner NORTHERN PACIFIC Bridge No. 11

Line, Branch, Subdivision BUCKLEY LINE

Location

Type: (~~Pile~~) (Frame) (Open ~~Deck~~) (Ballast Deck) (Other) Age 1936

BENT	PILES PER BENT	PILE	PILE HT.	BORED AT	SHELL	VOID	90° SHELL	90° VOID	H	REMARKS	PILE DIA.	PX or X	POST HT. O/W	G/L TREAT	PP
C 40	6	C 6	62	28	Sound						17				
				16	Sound										
				3	Sound										
				G/L	Sound										
41	6		62							None drilled	16				
42	6		62							None drilled	16				
43	6		62							None drilled	16				
44	6		62							None drilled	16				
45	6	1	62	1	Sound					Brace end decayed	16				
		3		3	Sound					Very dry inside					
		6		3	Sound					Brace end decayed					
46	6	5	62	1	Sound					Wood sub cap	16				
47	6	1	62	2	Sound						16				
		2		4	Sound										
48	6	1	62	2	Sound						16				
		5		2	Sound										
49	6	1	62	2	Sound										
		3		8	1½	8				Void in this area.		X			
				G/L											

SYMBOLS All Borings In Inches and Fractions to nearest ¼".

H – Heart
X – Reject
V – Void
SR – Shell Rot
RS – Ring Separation
DR – Decay Ring
DP – Decay Pocket
PP – Previously Posted
PX – Possible Reject
ST – Shell Thickness
P/W – Heavy Duty Pile Wrap
O/W – OsmoWeld
D/P – Drift Pin
G/L – Groundline Area

Bents Numbered From N ~~S~~ E W
Piling Numbered From N S E ~~W~~
Bent # 1 Is N ~~S~~ E W
(Timetable)

SIGNED

©1967 Pole Sprayers, Inc.
Printed in U.S.A.

OSMOSE WOOD PRESERVING CO. OF AMERICA, INC.

140.24b

SHEET 14 of 31 SHEETS

RAILROAD BRIDGE DIVISION
BORING RECORD

Date May 22-24, 1967

Owner NORTHERN PACIFIC Bridge No. 11

Line, Branch, Subdivision BUCKLEY LINE

Location

Type: (Pile) (Frame) (Open Deck) (Ballast Deck) (Other) Age 1936

BENT	PILES PER BENT	PILE	PILE HT.	BORED AT	SHELL	VOID	90° SHELL	90° VOID	H	REMARKS	PILE DIA.	PX or X	POST HT. O/W	G/L TREAT	PP
50	6	1	62	D/P	Sound						16				
				52	Sound										
				40	Sound										
				28	Sound										
				16	Sound										
				G/L	Sound										
		2		D/P	Sound										
				52	Sound										
				40	Sound										
				28	Sound										
				16	3½ 6						13				
		3		D/P	4½ 1½						16				
				52	Sound										
				40	Sound										
				28	Sound										
				16	Sound										
		4		D/P	Sound						16				
				52	Sound										
				40	Sound										

SYMBOLS All Borings In Inches and Fractions to nearest ¼".

H – Heart
X – Reject
V – Void
SR – Shell Rot
RS – Ring Separation
DR – Decay Ring
DP – Decay Pocket
PP – Previously Posted
PX – Possible Reject
ST – Shell Thickness
P/W – Heavy Duty Pile Wrap
O/W – OsmoWeld
D/P – Drift Pin
G/L – Groundline Area

Bents Numbered From N S E W
Piling Numbered From N S E W
Bent # 1 Is N S E W
(Timetable)

SIGNED

©1967 Pole Sprayers, Inc.
Printed in U.S.A.

OSMOSE WOOD PRESERVING CO. OF AMERICA, INC.

140.24b

SHEET 15 of 31 SHEETS

RAILROAD BRIDGE DIVISION
BORING RECORD

Date May 22-24, 1967

Owner NORTHERN PACIFIC Bridge No. 11

Line, Branch, Subdivision BUCKLEY LINE

Location

Type: (Pile) (Frame) (Open Deck) (Ballast Deck) (Other) Age 1936

BENT	PILES PER BENT	PILE	PILE HT.	BORED AT	SHELL	VOID	90° SHELL	90° VOID	H	REMARKS	PILE DIA.	PX or X	POST HT. O/W	G/L TREAT	PP
50 C	6	4 C	62	28	Sound						16				
		5		D/P	Sound						16				
				52	Sound										
				40	Sound										
				28	Sound										
				16	Sound										
		6		D/P	Sound						16				
				52	Sound										
				40	Sound										
				28	Sound										
				16	8	1					12				
NOTE Road under span 50 - Old timber used to lag bents 50 and 51 is severely decayed. Several pieces have bees. All drill chips in this bent very soft. Decay starting.															
51	6	1	62	1	Sound						16				
		2		4	3	1									
				1	1 3/4	8						PX			
52	6	6	62	3	Sound						16				
53	6	1	62	1	Sound						16				
		6		3	Sound										

SYMBOLS – All Borings In Inches and Fractions to nearest ¼".

H – Heart
X – Reject
V – Void
SR – Shell Rot
RS – Ring Separation
DR – Decay Ring
DP – Decay Pocket
PP – Previously Posted
PX – Possible Reject
ST – Shell Thickness
P/W – Heavy Duty Pile Wrap
O/W – OsmoWeld
D/P – Drift Pin
G/L – Groundline Area

Bents Numbered From N S E W
Piling Numbered From N S E W
Bent # 1 Is N S E W
(Timetable)

SIGNED

©1967 Pole Sprayers, Inc.
Printed in U.S.A.

OSMOSE WOOD PRESERVING CO.
OF AMERICA, INC.

140.24b

SHEET 16 of 31 SHEETS

RAILROAD BRIDGE DIVISION
BORING RECORD

Date May 22-24, 1967

Owner NORTHERN PACIFIC Bridge No. 11

Line, Branch, Subdivision BUCKLEY LINE

Location

Type: (Pile) (Frame) (Open Deck) (Ballast Deck) (Other) Age 19 36

BENT	PILES PER BENT	PILE	PILE HT.	BORED AT	SHELL	VOID	90° SHELL	90° VOID	H	REMARKS	PILE DIA.	PX or X	POST HT. O/W	G/L TREAT	PP
54	6	5	62	2	Sound						16				
		6		7	3	6									
				G/L	2	7						PX			
55	6	1	62	1	Sound						16				
		2		5	Sound										
56	6	1	62	1	Sound						16				
		5		2	Sound										
57	6	1	62	3	Sound						16				
58	6	1	62	G/L	Sound						16				
		6		3	Sound										
59	6	1	62	G/L	Sound						16				
		2		G/L	Sound										
		3		G/L	3	3									
		4		G/L	Sound										
		5		G/L	Sound										
		6		G/L	Sound										
60	Is 2 storey 6 post frame bent on blocking on concrete pier for steel deck truss														
	Sill below post #4 = 6"S ½"V Intermediate below post #1 =										10"S	1"V			
	All posts drilled at cap, intermediate and sill = No decay found														

SYMBOLS All Borings In Inches and Fractions to nearest ¼".

H – Heart
X – Reject
V – Void
SR – Shell Rot
RS – Ring Separation
DR – Decay Ring
DP – Decay Pocket
PP – Previously Posted
PX – Possible Reject
ST – Shell Thickness
P/W – Heavy Duty Pile Wrap
O/W – OsmoWeld
D/P – Drift Pin
G/L – Groundline Area

Bents Numbered From N S E W
Piling Numbered From N S E W
Bent # 1 Is N S E W
(Timetable)

SIGNED

©1967 Pole Sprayers, Inc.
Printed in U.S.A.

OSMOSE WOOD PRESERVING CO. OF AMERICA, INC.

140.24b

SHEET 17 of 31 SHEETS

RAILROAD BRIDGE DIVISION
BORING RECORD

Date May 22-24, 1967

Owner NORTHERN PACIFIC Bridge No. 11

Line, Branch, Subdivision BUCKLEY LINE

Location

Type: (~~Pile~~) (Frame) (Open ~~Deck~~) (Ballast Deck) (Other) Age 19 36

BENT	PILES PER BENT	PILE	PILE HT.	BORED AT	SHELL	VOID	90° SHELL	90° VOID	H	REMARKS	PILE DIA.	PX or X	POST HT. O/W	G/L TREAT	PP
61	Is 2 storey 6 post frame bent on blocking on concrete pier for steel deck truss.														
	No drilling done														
62	6	1	62	D/P	1/2	9					16	PX			
				52	Sound										
				40	Sound										
				28	Sound										
				16	Sound										
		2		D/P	Sound										
				52	Sound										
				40	Sound										
				28	Sound										
				16	Sound										
		3		D/P	Sound										
				52	Sound										
				40	Sound										
				28	Sound										
				16	Sound										
		4		D/P	Sound										
				52	Sound										

SYMBOLS All Borings In Inches and Fractions to nearest ¼".

H – Heart
X – Reject
V – Void
SR – Shell Rot
RS – Ring Separation
DR – Decay Ring
DP – Decay Pocket
PP – Previously Posted
PX – Possible Reject
ST – Shell Thickness
P/W – Heavy Duty Pile Wrap
O/W – OsmoWeld
D/P – Drift Pin
G/L – Groundline Area

Bents Numbered From N ~~S~~ E W
Piling Numbered From N S E ~~W~~
Bent # 1 Is N ~~S~~ E W
(Timetable)

SIGNED

©1967 Pole Sprayers, Inc.
Printed in U.S.A.

OSMOSE WOOD PRESERVING CO. OF AMERICA, INC.

140.24b

SHEET 18 of 31 SHEETS

RAILROAD BRIDGE DIVISION
BORING RECORD

Date May 22-24, 1967

Owner NORTHERN PACIFIC Bridge No. 11

Line, Branch, Subdivision BUCKLEY LINE

Location

Type: (~~Pile~~) (Frame) (Open ~~Deck~~) (Ballast Deck) (Other) Age 1936

BENT	PILES PER BENT	PILE	PILE HT.	BORED AT	SHELL	VOID	90° SHELL	90° VOID	H	REMARKS	PILE DIA.	PX or X	POST HT. O/W	G/L TREAT	PP
62 C	6	4 C	62	40	Sound						16				
				28	1	3/4					14				
				16	Sound										
		5		D/P	Sound										
				52	Sound										
				40	Sound										
				28	Sound										
				16	Sound										
		6		D/P	Sound										
				52	Sound										
				40	Sound										
				28	Sound										
				16	Sound										
63	6	1	60	1	Sound										
		6		2	Sound										
64	6	1	60	1	2	9						X			
65	6	1	60	2	1 1/2	9				Carpenter ants		X			
66	6	3	58							Wood sub cap #3 broomed at G/L					
		4		2	Sound										

SYMBOLS All Borings In Inches and Fractions to nearest ¼".

H – Heart
X – Reject
V – Void
SR – Shell Rot
RS – Ring Separation
DR – Decay Ring
DP – Decay Pocket
PP – Previously Posted
PX – Possible Reject
ST – Shell Thickness
P/W – Heavy Duty Pile Wrap
O/W – OsmoWeld
D/P – Drift Pin
G/L – Groundline Area

Bents Numbered From N ~~S~~ E W
Piling Numbered From N S E ~~W~~
Bent # 1 Is N ~~S~~ E W
(Timetable)

SIGNED

©1967 Pole Sprayers, Inc.
Printed in U.S.A.

OSMOSE WOOD PRESERVING CO.
OF AMERICA, INC.

140.24b

SHEET 19 of 31 SHEETS

RAILROAD BRIDGE DIVISION
BORING RECORD

Date May 22- 24, 1967

Owner NORTHERN PACIFIC Bridge No. 11

Line, Branch, Subdivision BUCKLEY LINE

Location

Type: (~~Pile~~) (Frame) (Open ~~Deck~~) (Ballast Deck) (Other) Age 1936

BENT	PILES PER BENT	PILE	PILE HT.	BORED AT	SHELL	VOID	90° SHELL	90° VOID	H	REMARKS	PILE DIA.	PX or X	POST HT. O/W	G/L TREAT	PP
C 66	6	6	58	4	Sound										
67	6	1	58	5	Sound					Wood sub cap	16				
		2		4	3	5¼									
				2	2	8						PX			
				1	3¼	5¾									
68	6	1	58	2	Sound					Wood sub cap	16				
69	6	1	58	2	Sound					Wood sub cap	16				
		2		1	Sound										
70	6	1	57	G/L	Sound						16				
		2		G/L	Sound										
		3		G/L	Sound										
		4		G/L	Sound										
		5		G/L	Sound										
		6		G/L	Sound										
71	6	2	57	3	Sound					Wood sub cap	16				
		4		3	Sound										
72	6	1	57	2	Sound						16				
		6		2	Sound										
73	6	1	57	2	Sound					Wood sub cap	16				

SYMBOLS All Borings In Inches and Fractions to nearest ¼".

H – Heart
X – Reject
V – Void
SR – Shell Rot
RS – Ring Separation
DR – Decay Ring
DP – Decay Pocket
PP – Previously Posted
PX – Possible Reject
ST – Shell Thickness
P/W – Heavy Duty Pile Wrap
O/W – OsmoWeld
D/P – Drift Pin
G/L – Groundline Area

Bents Numbered From N ~~S~~ E W
Piling Numbered From N S E ~~W~~
Bent # 1 Is N ~~S~~ E W
(Timetable)

SIGNED

©1967 Pole Sprayers, Inc.
Printed in U.S.A.

OSMOSE WOOD PRESERVING CO. OF AMERICA, INC.

140.24b

SHEET 20 of 31 SHEETS

RAILROAD BRIDGE DIVISION
BORING RECORD

Date May 22-24, 1967

Owner NORTHERN PACIFIC Bridge No. 11

Line, Branch, Subdivision BUCKLEY LINE

Location

Type: (Pile) (Frame) (Open Deck) (Ballast Deck) (Other) Age 1936

BENT	PILES PER BENT	PILE	PILE HT.	BORED AT	SHELL	VOID	90° SHELL	90° VOID	H	REMARKS	PILE DIA.	PX or X	POST HT. O/W	G/L TREAT	PP
74	6	1	57	D/P	2¼	1			7½	Wood sub cap	18				
				47	Sound										
				35	Sound										
				23	Sound										
				11	Sound										
				2	Sound										
		2		D/P	Sound										
				47	Sound										
				35	Sound										
				23	Sound										
				11	Sound										
		3		D/P	3½	½									
				47	Sound										
				35	Sound										
				23	Sound										
				11	Sound										
		4		D/P	Sound										
				47	Sound										
				35	Sound										

SYMBOLS All Borings In Inches and Fractions to nearest ¼".

H – Heart
X – Reject
V – Void
SR – Shell Rot
RS – Ring Separation
DR – Decay Ring
DP – Decay Pocket
PP – Previously Posted
PX – Possible Reject
ST – Shell Thickness
P/W – Heavy Duty Pile Wrap
O/W – OsmoWeld
D/P – Drift Pin
G/L – Groundline Area

Bents Numbered From N S E W
Piling Numbered From N S E W
Bent # 1 Is N S E W
(Timetable)

SIGNED

©1967 Pole Sprayers, Inc.
Printed in U.S.A.

OSMOSE WOOD PRESERVING CO. OF AMERICA, INC.

140.24b

SHEET 21 of 31 SHEETS

RAILROAD BRIDGE DIVISION
BORING RECORD

Date May 22-24, 1967

Owner NORTHERN PACIFIC Bridge No. 11

Line, Branch, Subdivision BUCKLEY LINE

Location

Type: (~~Pile~~) (Frame) (~~Open~~ Deck) (Ballast Deck) (Other) Age 1936

BENT	PILES PER BENT	PILE	PILE HT.	BORED AT	SHELL	VOID	90° SHELL	90° VOID	H	REMARKS	PILE DIA.	PX or X	POST HT. O/W	G/L TREAT	PP
C 74	6	C 4	57	23	1	3½					15				
				11	2	1					10				
		5		D/P	3½	½					16				
				47	Sound										
				35	Sound										
				23	Sound										
				11	Sound										
		6		D/P	Sound										
				47	5	1					16				
				35	Sound										
				23	3	½	7½	1			15				
				11	6½	¼									
				3	Sound										
75	6	6	56	2	Sound					Wood sub cap	16				
76	6	1	56	2	Sound					Wood sub cap	16				
		2		5	Sound										
		6		2	Sound										
77	6	1	56	4	2	4				Carpenter ants	16				
				G/L	2	11						X			

SYMBOLS All Borings In Inches and Fractions to nearest ¼".

H – Heart
X – Reject
V – Void
SR – Shell Rot
RS – Ring Separation
DR – Decay Ring
DP – Decay Pocket
PP – Previously Posted
PX – Possible Reject
ST – Shell Thickness
P/W – Heavy Duty Pile Wrap
O/W – OsmoWeld
D/P – Drift Pin
G/L – Groundline Area

Bents Numbered From N ~~S~~ E W
Piling Numbered From N S E ~~W~~
Bent # 1 Is N ~~S~~ E W
(Timetable)

SIGNED

©1967 Pole Sprayers, Inc.
Printed in U.S.A.

OSMOSE WOOD PRESERVING CO. OF AMERICA, INC.

140.24b

SHEET 22 of 31 SHEETS

RAILROAD BRIDGE DIVISION
BORING RECORD

Date May 22-24, 1967

Owner NORTHERN PACIFIC Bridge No. 11

Line, Branch, Subdivision BUCKLEY LINE

Location

Type: (~~Pile~~) (Frame) (Open ~~Deck~~) (Ballast Deck) (Other) Age 19 36

BENT	PILES PER BENT	PILE	PILE HT.	BORED AT	SHELL	VOID	90° SHELL	90° VOID	H	REMARKS	PILE DIA.	PX or X	POST HT. O/W	G/L TREAT	PP
78	6	4	56	2	Sound					Wood sub cap	16				
		5		2	Sound										
79	6	1	56	2	Sound						16				
80	6	1	56	G/L	Sound						16				
		2		G/L	Sound										
		3		G/L	Sound										
		4		G/L	Sound										
		5		G/L	Sound										
		6		G/L	Sound										
81	6	1	56	3	Sound					Wood sub cap	16				
		2		1	Sound										
82	6	1	56	3	Sound						16				
		3		2	Sound										
		6		4	Sound										
83	6	3	56	2	Sound						16				
		6		2	Sound										
84	6	1	56	2	Sound						16				
		5		2	Sound										
85	6		56							None drilled	16				

SYMBOLS All Borings In Inches and Fractions to nearest ¼".

H – Heart
X – Reject
V – Void
SR – Shell Rot
RS – Ring Separation
DR – Decay Ring
DP – Decay Pocket
PP – Previously Posted
PX – Possible Reject
ST – Shell Thickness
P/W – Heavy Duty Pile Wrap
O/W – OsmoWeld
D/P – Drift Pin
G/L – Groundline Area

Bents Numbered From N ~~S~~ E W
Piling Numbered From N S E ~~W~~
Bent # 1 Is N ~~S~~ E W
(Timetable)

SIGNED

©1967 Pole Sprayers, Inc.
Printed in U.S.A.

OSMOSE WOOD PRESERVING CO. OF AMERICA, INC.

140.24b

SHEET 23 of 31 SHEETS

RAILROAD BRIDGE DIVISION
BORING RECORD

Date May 22-24, 1967

Owner NORTHERN PACIFIC Bridge No. 11

Line, Branch, Subdivision BUCKLEY LINE

Location

Type: (~~Pile~~) (Frame) (Open ~~Deck~~) (Ballast Deck) (Other) Age 1936

BENT	PILES PER BENT	PILE	PILE HT.	BORED AT	SHELL	VOID	90° SHELL	90° VOID	H	REMARKS	PILE DIA.	PX or X	POST HT. O/W	G/L TREAT	PP
86	6	1	55	D/P	Sound					Wood sub cap	16				
				45	Sound										
				33	Sound										
				21	Sound										
				9	Sound										
				3	7 3/4	1 1/4									
		2		D/P	Sound										
				45	Sound										
				33	Sound										
				21	Sound										
				9	Sound										
		3		D/P	Sound										
				45	Sound										
				33	Sound										
				21	Sound										
				9	Sound										
		4		D/P	Sound										
				45	Sound										
				33	2 1/4	3					14				

SYMBOLS All Borings In Inches and Fractions to nearest 1/4".

- H – Heart
- X – Reject
- V – Void
- SR – Shell Rot
- RS – Ring Separation
- DR – Decay Ring
- DP – Decay Pocket
- PP – Previously Posted
- PX – Possible Reject
- ST – Shell Thickness
- P/W – Heavy Duty Pile Wrap
- O/W – OsmoWeld
- D/P – Drift Pin
- G/L – Groundline Area

Bents Numbered From N ~~S~~ E W
Piling Numbered From N S E ~~W~~
Bent # 1 Is N ~~S~~ E W
(Timetable)

SIGNED

©1967 Pole Sprayers, Inc.
Printed in U.S.A.

OSMOSE WOOD PRESERVING CO. OF AMERICA, INC.

140.24b

SHEET 24 of 31 SHEETS

RAILROAD BRIDGE DIVISION
BORING RECORD

Date May 22 - 24, 1967

Owner NORTHERN PACIFIC Bridge No. 11

Line, Branch, Subdivision BUCKLEY LINE

Location

Type: (~~Pile~~) (Frame) (Open ~~Deck~~) (Ballast Deck) (Other) Age 19 36

BENT	PILES PER BENT	PILE	PILE HT.	BORED AT	SHELL	VOID	90° SHELL	90° VOID	H	REMARKS	PILE DIA.	PX or X	POST HT. O/W	G/L TREAT	PP
C 86	6	C 4	55	21	4	8	4	7			13	X			
				9	Sound										
		5		D/P	5½	8½					21				
				45	Sound										
				33	Sound										
				2~~1~~	Sound										
				9	Sound										
		6		D/P	4½	1¾			3¼		17 ~~16~~				
				45	6	4									
				33	Sound										
				21	Sound										
				9	Sound										
				2	Sound										
87	6	2	55	2	Sound					Wood sub cap	16				
		5		4	3¼	¾				Lower brace ends					
				3	2	4				buried					
		6		6	Sound										
88	6	1	55	2	Sound					Wood sub cap	16				
		5		4	Sound										

SYMBOLS All Borings In Inches and Fractions to nearest ¼".

H – Heart
X – Reject
V – Void
SR – Shell Rot
RS – Ring Separation
DR – Decay Ring
DP – Decay Pocket
PP – Previously Posted
PX – Possible Reject
ST – Shell Thickness
P/W – Heavy Duty Pile Wrap
O/W – OsmoWeld
D/P – Drift Pin
G/L – Groundline Area

Bents Numbered From N ~~S~~ E W
Piling Numbered From N S E ~~W~~
Bent # 1 Is N ~~S~~ E W
(Timetable)

SIGNED

©1967 Pole Sprayers, Inc.
Printed in U.S.A.

OSMOSE WOOD PRESERVING CO. OF AMERICA, INC.

140.24b

SHEET 25 of 31 SHEETS

RAILROAD BRIDGE DIVISION BORING RECORD

Date May 22-24, 1967

Owner NORTHERN PACIFIC Bridge No. 11

Line, Branch, Subdivision BUCKLEY LINE

Location

Type: (~~Pile~~) (Frame) (Open ~~Deck~~) (Ballast Deck) (Other) Age 1936

BENT	PILES PER BENT	PILE	PILE HT.	BORED AT	SHELL	VOID	90° SHELL	90° VOID	H	REMARKS	PILE DIA.	PX or X	POST HT. O/W	G/L TREAT	PP
C 88	6	C 5	55	3	4½	5½				Lower brace ends					
				1	4	6				buried		PX			
		6		4	Sound										
89	6		55							Wood sub cap None drilled. Lower brace ends buried.	16				
90	6	1	55	G/L	5	3				Wood sub cap	16				
		2		G/L	Sound					Lower brace ends					
		3		G/L	Sound					buried					
		4		G/L	Sound										
		5		G/L	Sound										
		6		G/L	Sound										
91	6	1	55	6	7	1				Wood sub cap	16				
				1	2¾	7				Some lower brace					
		2		4	2¾	2½				ends buried					
				2	3	6½									
		5		5	Sound										
		6		3	Sound										
92	6	1	55	2	Sound					Wood sub cap	16				
		5		1	Sound										

SYMBOLS All Borings In Inches and Fractions to nearest ¼".

H – Heart
X – Reject
V – Void
SR – Shell Rot
RS – Ring Separation
DR – Decay Ring
DP – Decay Pocket
PP – Previously Posted
PX – Possible Reject
ST – Shell Thickness
P/W – Heavy Duty Pile Wrap
O/W – OsmoWeld
D/P – Drift Pin
G/L – Groundline Area

Bents Numbered From N ~~S~~ E W
Piling Numbered From N S E ~~W~~
Bent # 1 Is N ~~S~~ E W
(Timetable)

SIGNED

©1967 Pole Sprayers, Inc.
Printed in U.S.A.

OSMOSE WOOD PRESERVING CO.
OF AMERICA, INC.

140.24b

SHEET 26 of 31 SHEETS

RAILROAD BRIDGE DIVISION
BORING RECORD

Date May 22 - 24, 1967

Owner NORTHERN PACIFIC Bridge No. 11

Line, Branch, Subdivision BUCKLEY LINE

Location

Type: (~~Pile~~) (Frame) (Open ~~Deck~~) (Ballast Deck) (Other) Age 19 36

BENT	PILES PER BENT	PILE	PILE HT.	BORED AT	SHELL	VOID	90° SHELL	90° VOID	H	REMARKS	PILE DIA.	PX or X	POST HT. O/W	G/L TREAT	PP
93	6	1	54	4	6 1/2	1 1/2				Wood sub cap	16				
		5		3	Sound										
94	6	1	50	7	2 1/4	3 1/4				Wood sub cap	16				
				2	2	7						PX			
		5		1	Sound										
		6		4	6	4	4 1/2	4 1/2							
				2	5 3/4	4									
95	6		47							Wood sub cap None drilled	16				
96	6	2	40	4	Sound					Wood sub cap Brace ends buried in road fill	16				
Paved road between bents 96 & 97 metal guard rails															
97	6	6	40	6	3	9					16	PX			
				1	2	7 1/2									
98	6	1	40	D/P	Sound					Wood sub cap	16				
				30	Sound										
				18	Sound										
				8	3	10	1 1/2	11				X			
				6	2 3/4	7 1/4									
				3	2	8									

SYMBOLS All Borings In Inches and Fractions to nearest 1/4".

H – Heart
X – Reject
V – Void
SR – Shell Rot
RS – Ring Separation
DR – Decay Ring
DP – Decay Pocket
PP – Previously Posted
PX – Possible Reject
ST – Shell Thickness
P/W – Heavy Duty Pile Wrap
O/W – OsmoWeld
D/P – Drift Pin
G/L – Groundline Area

Bents Numbered From N ~~S~~ E W
Piling Numbered From N S E ~~W~~
Bent # 1 Is N ~~S~~ E W
(Timetable)

SIGNED

©1967 Pole Sprayers, Inc.
Printed in U.S.A.

OSMOSE WOOD PRESERVING CO. OF AMERICA, INC.

140.24b

SHEET 27 of 31 SHEETS

RAILROAD BRIDGE DIVISION
BORING RECORD

Date May 22-24, 1967

Owner NORTHERN PACIFIC Bridge No. 11

Line, Branch, Subdivision BUCKLEY LINE

Location

Type: (~~Pile~~) (Frame) (~~Open~~ Deck) (Ballast Deck) (Other) Age 1936

BENT	PILES PER BENT	PILE	PILE HT.	BORED AT	SHELL	VOID	90° SHELL	90° VOID	H	REMARKS	PILE DIA.	PX or X	POST HT. O/W	G/L TREAT	PP
C 98	6	2	40	D/P	Sound										
				30	Sound										
				18	2 1/4	3 3/4					15				
				8	Sound										
		3		D/P	Sound										
				30	Sound										
				18	Sound										
				8	Sound										
		4		D/P	Sound										
				30	Sound										
				18	Sound										
				8	Sound										
		5		D/P	1	3/4									
				30	Sound										
				18	Sound										
				8	Sound										
		6		D/P	6 1/4	3					16				
				30	Sound										
				18	6 1/2	1/2									

SYMBOLS All Borings In Inches and Fractions to nearest 1/4".

H – Heart
X – Reject
V – Void
SR – Shell Rot
RS – Ring Separation
DR – Decay Ring
DP – Decay Pocket
PP – Previously Posted
PX – Possible Reject
ST – Shell Thickness
P/W – Heavy Duty Pile Wrap
O/W – OsmoWeld
D/P – Drift Pin
G/L – Groundline Area

Bents Numbered From N ~~S~~ E W
Piling Numbered From N S E ~~W~~
Bent # 1 Is N ~~S~~ E W
(Timetable)

SIGNED

©1967 Pole Sprayers, Inc.
Printed in U.S.A.

OSMOSE WOOD PRESERVING CO. OF AMERICA, INC.

140.24b

SHEET 28 of 31 SHEETS

RAILROAD BRIDGE DIVISION BORING RECORD

Date May 22-24, 1967

Owner NORTHERN PACIFIC Bridge No. 11

Line, Branch, Subdivision BUCKLEY LINE

Location

Type: (~~P/C~~) (Frame) (Open ~~Deck~~) (Ballast Deck) (Other) Age 1936

BENT	PILES PER BENT	PILE	PILE HT.	BORED AT	SHELL	VOID	90° SHELL	90° VOID	H	REMARKS	PILE DIA.	PX or X	POST HT. O/W	G/L TREAT	PP
98 C	6	6 C	40	8	4	8	6	4½			15				
				4	Sound										
Paved road between bents 98 & 99 metal guard rails															
99	6	1	40	2	Sound					Wood sub cap	16				
		6		4	Sound					Brace ends buried in road fill					
100	6	1	52	G/L	Sound					Wood sub cap	16				
		2		G/L	Sound										
		3		G/L	Sound										
		4		G/L	Sound										
		5		G/L	Sound										
		6		G/L	Sound										
101	6	2	50	2	Sound					Wood sub cap	16				
		5		3	½	3½	8	2	4						
102	6	6	46	3	Sound						16				
103	6	1	45	2	Sound					Wood sub cap	16				
		2		3	Sound										
		4		3	Sound										
		5		4	Sound										
104	6	1	41	3	Sound					Wood sub cap	16				

SYMBOLS All Borings In Inches and Fractions to nearest ¼".

H – Heart
X – Reject
V – Void
SR – Shell Rot
RS – Ring Separation
DR – Decay Ring
DP – Decay Pocket
PP – Previously Posted
PX – Possible Reject
ST – Shell Thickness
P/W – Heavy Duty Pile Wrap
O/W – OsmoWeld
D/P – Drift Pin
G/L – Groundline Area

Bents Numbered From N ~~S~~ E W
Piling Numbered From N S E ~~W~~
Bent # 1 Is N ~~S~~ E W
(Timetable)

SIGNED

©1967 Pole Sprayers, Inc.
Printed in U.S.A.

OSMOSE WOOD PRESERVING CO. OF AMERICA, INC.

140.24b

SHEET 29 of 31 SHEETS

RAILROAD BRIDGE DIVISION
BORING RECORD

Date May 22-24, 1967

Owner NORTHERN PACIFIC Bridge No. 11

Line, Branch, Subdivision BUCKLEY LINE

Location

Type: (~~Pile~~) (Frame) (Open ~~Deck~~) (Ballast Deck) (Other) Age 1936

BENT	PILES PER BENT	PILE	PILE HT.	BORED AT	SHELL	VOID	90° SHELL	90° VOID	H	REMARKS	PILE DIA.	PX or X	POST HT. O/W	G/L TREAT	PP
C 104	6	5	41	2	Sound										
14 105	6	6	37	2	Sound						16				
13 106	6	6	34	3	Sound						16				
12 107	6	1	32	4	Sound						16				
		3		2	Sound										
		6		2	Sound										
11 108	5	1	26	1	Sound						16				
		2		2	Sound										
10 109	5	1	23	3	Sound						16				
		2		2	Sound										
		5		3	Sound										
9 110	5	1	22	D/P	Sound						16				
			~~12~~	12	Sound										
				G/L	Sound										
		2		D/P	Sound										
				12	Sound										
				G/L	Sound										
		3		D/P	Sound										
				12	Sound										

SYMBOLS All Borings In Inches and Fractions to nearest ¼".

H – Heart
X – Reject
V – Void
SR – Shell Rot
RS – Ring Separation
DR – Decay Ring
DP – Decay Pocket
PP – Previously Posted
PX – Possible Reject
ST – Shell Thickness
P/W – Heavy Duty Pile Wrap
O/W – OsmoWeld
D/P – Drift Pin
G/L – Groundline Area

Bents Numbered From N ~~S~~ E W
Piling Numbered From N S E ~~W~~
Bent # 1 Is N ~~S~~ E W
(Timetable)

SIGNED

©1967 Pole Sprayers, Inc.
Printed in U.S.A.

OSMOSE WOOD PRESERVING CO. OF AMERICA, INC.

140.24b

SHEET 30 of 31 SHEETS

RAILROAD BRIDGE DIVISION
BORING RECORD

Date May 22-24, 1967

Owner NORTHERN PACIFIC Bridge No. 11

Line, Branch, Subdivision BUCKLEY LINE

Location

Type: (~~Pile~~) (Frame) (Open ~~Deck~~) (Ballast Deck) (Other) Age 1936

BENT	PILES PER BENT	PILE	PILE HT.	BORED AT	SHELL	VOID	90° SHELL	90° VOID	H	REMARKS	PILE DIA.	PX or X	POST HT. O/W	G/L TREAT	PP
9 C 110	5	3 C	22	G/L	Sound										
		4		D/P	Sound										
				12	Sound										
				G/L	Sound										
		5		D/P	6½ 3										
				12	Sound										
				G/L	Sound										
8 111	5	1	16	4	Sound						16				
		5		4	Sound										
7 112	5	1	12	3	Sound						16				
6 113	5	1	11	2	Sound						16				
		3		4	Sound	1 3/4	1								
		5		1	Sound										
5 114	5	1	9	2	Sound						16				
4 115	5	3	6	2	Sound						16				
		5		2	8 2										
116	5	1	6	D/P	5½ 5						16				
				2	Sound										
		4		1	Sound										

SYMBOLS All Borings In Inches and Fractions to nearest ¼".

H – Heart
X – Reject
V – Void
SR – Shell Rot
RS – Ring Separation
DR – Decay Ring
DP – Decay Pocket
PP – Previously Posted
PX – Possible Reject
ST – Shell Thickness
P/W – Heavy Duty Pile Wrap
O/W – OsmoWeld
D/P – Drift Pin
G/L – Groundline Area

Bents Numbered From N ~~S~~ E W
Piling Numbered From N S E ~~W~~
Bent # 1 Is N ~~S~~ E W
(Timetable)

SIGNED

©1967 Pole Sprayers, Inc.
Printed in U.S.A.

OSMOSE WOOD PRESERVING CO. OF AMERICA, INC.

140.24b

SHEET 31 of 31 SHEETS

RAILROAD BRIDGE DIVISION
BORING RECORD

Date May 22-24, 1967

Owner NORTHERN PACIFIC Bridge No. 11

Line, Branch, Subdivision BUCKLEY LINE

Location

Type: (~~Pile~~) (Frame) (Open ~~Deck~~) (Ballast Deck) (Other) Age 19 36

BENT	PILES PER BENT	PILE	PILE HT.	BORED AT	SHELL	VOID	90° SHELL	90° VOID	H	REMARKS	PILE DIA.	PX or X	POST HT. O/W	G/L TREAT	PP
C 116	5	5	6	1	Sound										
117	5	1	4	D/P	7	3					16				
				G/L	Sound										
		2		D/P	Sound										
				G/L	Sound										
		3		D/P	3½	10½						PX			
				G/L	Sound										
		4		D/P	Sound										
				G/L	Sound										
		5		D/P	4	3									
				G/L	6	1									
118										Buried					

SYMBOLS All Borings In Inches and Fractions to nearest ¼".

H – Heart
X – Reject
V – Void
SR – Shell Rot
RS – Ring Separation
DR – Decay Ring
DP – Decay Pocket
PP – Previously Posted
PX – Possible Reject
ST – Shell Thickness
P/W – Heavy Duty Pile Wrap
O/W – OsmoWeld
D/P – Drift Pin
G/L – Groundline Area

Bents Numbered From N ~~S~~ E W
Piling Numbered From N S E ~~W~~
Bent # 1 Is N ~~S~~ E W
(Timetable)

SIGNED

©1967 Pole Sprayers, Inc.
Printed in U.S.A.

OSMOSE WOOD PRESERVING CO.
OF AMERICA, INC.

140.24b

SHEET 1 of 5 SHEETS

RAILROAD BRIDGE DIVISION
BORING RECORD

Date May 25, 1967

Owner NORTHERN PACIFIC RAILWAY Bridge No. 35

Line, Branch, Subdivision SNOQUALMIE LINE

Location West side of NORTH BEND, WASH. just south of Highway 10.

Type: (~~Pile~~) (Frame) (Open Deck) (~~Ballast~~ Deck) (Other) _____ Age 1929 (?)

BENT	PILES PER BENT	PILE	PILE HT.	BORED AT	SHELL	VOID	90° SHELL	90° VOID	H	REMARKS	PILE DIA.	PX or X	POST HT. O/W	G/L TREAT	PP
1	5	1	3	D/P	Sound						15				
				G/L	Sound										
		2		D/P	Sound										
				G/L	Sound										
		3		D/P	Sound										
				G/L	Sound										
		4		D/P	Sound										
				G/L	Sound										
		5		D/P	Sound										
				G/L	Sound										
2	6	1	10	6	Sound						15				
3	6		13							In water	15				
4	6		12							Partly in water	16				
5	6		11								16				
6	6		11								16				
7	6		11								15				
8	6		11								15				
9	6	1	9	D/P	Sound						16				
				G/L	Sound										

SYMBOLS All Borings In Inches and Fractions to nearest ¼".

H – Heart
X – Reject
V – Void
SR – Shell Rot
RS – Ring Separation
DR – Decay Ring
DP – Decay Pocket
PP – Previously Posted
PX – Possible Reject
ST – Shell Thickness
P/W – Heavy Duty Pile Wrap
O/W – OsmoWeld
D/P – Drift Pin
G/L – Groundline Area

Bents Numbered From N S E ✗
Piling Numbered From ✗ S E W
Bent # 1 Is N S E ✗
(Timetable)

SIGNED _____

©1967 Pole Sprayers, Inc.
Printed in U.S.A.

OSMOSE WOOD PRESERVING CO.
OF AMERICA, INC.

140.24b

SHEET 2 of 5 SHEETS

RAILROAD BRIDGE DIVISION
BORING RECORD

Date May 25, 1967

Owner NORTHERN PACIFIC Bridge No. 35

Line, Branch, Subdivision SNOQUALMIE LINE

Location

Type: (~~Pile~~) (Frame) (Open Deck) (Ballast Deck) (Other) Age 19 29(?)

BENT	PILES PER BENT	PILE	PILE HT.	BORED AT	SHELL	VOID	90° SHELL	90° VOID	H	REMARKS	PILE DIA.	PX or X	POST HT. O/W	G/L TREAT	PP
9c	6	2	9	D/P	Sound						16				
				G/L	Sound										
		3		D/P	Sound										
				G/L	Sound										
		4		D/P	Sound										
				G/L	Sound										
		5		D/P	Sound										
				G/L	Sound										
		6		D/P	Sound										
				G/L	Sound										
Also bored cap at drift pins - no decay found.															
10	6	6	8	4	Sound						16				
11	6		6								14				
12	6	1	6	5	Sound						14				
		6		2	Sound					Damp inside					
13	6		6								14				
14	6		7								15				
15	6		8								15				
16	6		6								15				

SYMBOLS All Borings In Inches and Fractions to nearest ¼".

H – Heart
X – Reject
V – Void
SR – Shell Rot
RS – Ring Separation
DR – Decay Ring
DP – Decay Pocket
PP – Previously Posted
PX – Possible Reject
ST – Shell Thickness
P/W – Heavy Duty Pile Wrap
O/W – OsmoWeld
D/P – Drift Pin
G/L – Groundline Area

Bents Numbered From N S E ~~W~~
Piling Numbered From ~~N~~ S E W
Bent # 1 Is N S E ~~W~~
(Timetable)

SIGNED

©1967 Pole Sprayers, Inc.
Printed in U.S.A.

OSMOSE WOOD PRESERVING CO.
OF AMERICA, INC.

140.24b

SHEET 3 of 5 SHEETS

RAILROAD BRIDGE DIVISION
BORING RECORD

Date May 25, 1967

Owner NORTHERN PACIFIC Bridge No. 35

Line, Branch, Subdivision SNOQUALMIE LINE

Location

Type: (~~Pile~~) (Frame) (Open Deck) (Ball~~ast~~ Deck) (Other) Age 1929(?)

BENT	PILES PER BENT	PILE	PILE HT.	BORED AT	SHELL	VOID	90° SHELL	90° VOID	H	REMARKS	PILE DIA.	PX or X	POST HT. O/W	G/L TREAT	PP
17	6	1	6	D/P	Sound						15				
				G/L	Sound										
		2		D/P	Sound										
				G/L	Sound										
		3		D/P	Sound										
				G/L	Sound										
		4		D/P	Sound										
				G/L	Sound										
		5		D/P	Sound										
				G/L	Sound										
		6		D/P	Sound										
				G/L	Sound										
Also bored cap at drift pins - no decay found.															
18	6		8							Some scouring	15				
19	6		8							along south side	15				
20	6		8								15				
21	6		9								15				
22	6	6	12	2	Sound					Lagged with 3x10	15				
										on east side					

SYMBOLS All Borings In Inches and Fractions to nearest 1/4".

H – Heart
X – Reject
V – Void
SR – Shell Rot
RS – Ring Separation
DR – Decay Ring
DP – Decay Pocket
PP – Previously Posted
PX – Possible Reject
ST – Shell Thickness
P/W – Heavy Duty Pile Wrap
O/W – OsmoWeld
D/P – Drift Pin
G/L – Groundline Area

Bents Numbered From N S E W
Piling Numbered From N S E W
Bent # 1 Is N S E W
(Timetable)

SIGNED

©1967 Pole Sprayers, Inc.
Printed in U.S.A.

OSMOSE WOOD PRESERVING CO.
OF AMERICA, INC.

140.24b

SHEET 4 of 5 SHEETS

RAILROAD BRIDGE DIVISION
BORING RECORD

Date May 25, 1967

Owner NORTHERN PACIFIC Bridge No. 35

Line, Branch, Subdivision SNOQUALMIE LINE

Location

Type: (~~Pile~~) (Frame) (Open Deck) (Ballast ~~Deck~~) (Other) Age 1929(?)

BENT	PILES PER BENT	PILE	PILE HT.	BORED AT	SHELL	VOID	90° SHELL	90° VOID	H	REMARKS	PILE DIA.	PX or X	POST HT. O/W	G/L TREAT	PP
23	6		12							Lagged with 3x10 on west side	15				
		Roadway between bents 22 & 23													
24	6		11								15				
25	6	1	6	D/P	Sound						15				
				G/L	Sound										
		2		D/P	Sound										
				G/L	Sound										
		3		D/P	Sound										
				G/L	Sound										
		4		D/P	Sound										
				G/L	Sound										
		5		D/P	Sound										
				G/L	Sound										
		6		D/P	Sound										
				G/L	Sound										
26	6		2							Buried in dyke	15				
27	6		12							Partly buried in dyke	16				
28	6		12								15				
29	Frame bent 5 - 12x12 posts on wooden piers of steel span.														

SYMBOLS All Borings In Inches and Fractions to nearest ¼".

H – Heart
X – Reject
V – Void
SR – Shell Rot
RS – Ring Separation
DR – Decay Ring
DP – Decay Pocket
PP – Previously Posted
PX – Possible Reject
ST – Shell Thickness
P/W – Heavy Duty Pile Wrap
O/W – OsmoWeld
D/P – Drift Pin
G/L – Groundline Area

Bents Numbered From N S E ~~W~~
Piling Numbered From ~~N~~ S E W
Bent # 1 Is N S E ~~W~~
(Timetable)

SIGNED

©1967 Pole Sprayers, Inc.
Printed in U.S.A.

OSMOSE WOOD PRESERVING CO.
OF AMERICA, INC.

140.24b

SHEET 5 of 5 SHEETS

RAILROAD BRIDGE DIVISION
BORING RECORD

Date May 25, 1967

Owner NORTHERN PACIFIC Bridge No. 35

Line, Branch, Subdivision SNOQUALMIE LINE

Location

Type: (~~Pile~~) (Frame) (Open Deck) (~~Ballast~~ Deck) (Other) Age 1929 (?)

BENT	PILES PER BENT	PILE	PILE HT.	BORED AT	SHELL	VOID	90° SHELL	90° VOID	H	REMARKS	PILE DIA.	PX or X	POST HT. O/W	G/L TREAT	PP
30	Frame bent			5-12x12	posts	on	wooden			pier of steel truss span.					
31	6		2							Buried in dyke	15				
32	6		9							Partly buried in dyke	15				
33	6		10								17				
34	6		10								17				
35	6		8								16				
36	6		9								16				
37	6		9								16				
38	6		9								16				
39	6		10								16				
40	6		12								15				
41	6		12								15				
42	6		12								14				
43	6		12							Lagged with 3x10 on east side	15				
44	6		12							Lagged with 3x10 on west side	15				
	Roadway between bents 43 & 44														
45	6	6	8	4	1½	6	4½	4			18				
46	5		1								16				

SYMBOLS All Borings In Inches and Fractions to nearest ¼".

H – Heart
X – Reject
V – Void
SR – Shell Rot
RS – Ring Separation
DR – Decay Ring
DP – Decay Pocket
PP – Previously Posted
PX – Possible Reject
ST – Shell Thickness
P/W – Heavy Duty Pile Wrap
O/W – OsmoWeld
D/P – Drift Pin
G/L – Groundline Area

Bents Numbered From N S E X
Piling Numbered From X S E W
Bent # 1 Is N S E X
(Timetable)

SIGNED

from the
BRIDGE INSPECTION & TREATING DIVISION
OSMOSE WOOD PRESERVING CO. OF AMERICA, INC., BUFFALO, N. Y.
980 ELLICOTT STREET • PHONE: TT 2-5905

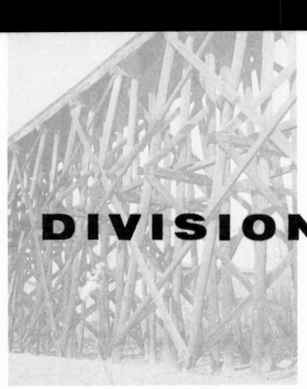

FROM

TO

FILE

VFD

MEMORANDUM NO. 23

REVISED SPECIFICATIONS - OSMOWELD

OsmoWeld is celebrating its sixth anniversary this month.

Almost six years ago to the day, a number of piles were posted on a ballast deck pile trestle carrying main-line high speed traffic on a mid-western road. Due to the moisture sealing and the adhesive properties of OsmoWeld, those piles remain in perfect structural condition today.

And yet, improvements have been made --- both in formulating and in application techniques. To keep you current on these improvements, we are enclosing the following latest specifications for your file:

OsmoWeld Data Sheet	-	7000. 2b
Reanchoring Drift Pin	-	141. 2c
Posting Piling	-	141. 3b
Heating OsmoWeld	-	7000. 4
Shimming	-	7000. 5

If you would like additional copies for distribution to your field personnel, we would be pleased to furnish the required amount.

J. W. Storer
Vice President

ATT-

August, 1967

OSMOSE WOOD PRESERVING CO. OF AMERICA, INC. • 980 ELLICOTT ST., BUFFALO, N. Y. 14209 • PHONE AREA CODE 716 • 882-5905

For Additional Copies
Request Form 7000 .1c

OSMOSE DATA SHEET

OSMOWELD

Epoxy resins have demonstrated remarkable characteristics of strength and adhesion which are finding ever-increasing uses in industry. OsmoWeld is a specially designed compound which, when cured, is stronger than wood and can be sawn, drilled, sanded, and painted. Nails and screws cannot be applied in the same manner as they can be to wood, but they can be coated with OsmoWeld and inserted into pre-bored holes, for superior holding qualities.

1. Uses — Industrial heavy-use applications are practically limitless in that OsmoWeld possesses such high strength characteristics and bonds to most other materials including wood, steel and concrete. The present formulation sets up and bonds strongly when applied to wet surfaces and even under water.

The most common and major uses employed by railroads and utilities to date include the following:

- Posting (splicing) piling.
- Shimming to improve load-bearing characteristics.
- Filling voids, checks, cracks, splits, and repair of mechanical damage.
- Repairing woodpecker holes in poles and piling.
- Patching concrete. This is worthy of special note in that concrete cracks do not have to be chipped out—only made reasonably clean and free of loose particles.
- Repair of pipe leaks or metal machinery casings.

2. Packaging — Both the hardener and the resin compounds are contained in a standard 12 oz. calking tube. Just prior to use, they are mixed in the tube by means of a special gasket and mixing tool—one each of which is included in every carton. Mixing can be performed by hand, but the preferable and faster method employs the use of a ¼" electric drill.

3. Storage — Maximum storage life is not as yet established for present formulation, but minimum shelf life is a period of one year following receipt.

4. Temperature Range — Current OsmoWeld formulation, improved from the original, will set up after mixing at temperatures approaching 32° F. Various simple methods can be employed to keep the material "warm" in cooler temperatures. Setup time at 70° F. is in the 20 minute range; this period lengthens if the temperature of the material is cooler and is shorter at higher temperatures. Also, the greater the mass or thickness, the higher the internal temperature—and the faster the setup time.

©1967 OSMOSE WOOD PRESERVING CO.

5. Test Data — An independent laboratory, Pittsburgh Testing Laboratory, obtained the OsmoWeld data listed below. Wood control values are obtained from Forest Products Laboratory Technical Bulletin No. 479. Compression strength of OsmoWeld as compared to various species of wood as expressed in pounds per square inch is:

OSMOWELD	WOOD CONTROLS		
	S. Y. Pine	W. R. Cedar	Fir
9,255	7,625	4,360	4,660

6. Some Tips on Use — Without any exception of which we know, people actually mixing and using OsmoWeld become extremely enthusiastic about its characteristics following first exposure to it. Here are a couple of tips that have proven satisfactory in the field.

Keep a supply of denatured alcohol on hand as a cleaning agent. Since the material does not adhere to polyethylene film, that material serves as a good surfacing over cardboard or wooden forms to prevent slump prior to setup in certain instances. Masking tape (industrial grade) can serve the same purpose and is easily removed after setup if desired. At 70° F., each 12 oz. tube results in about 18 cubic inches of void capacity. This capacity can be extended to twice that amount through the use of "fillers" such as treated wood spacer strips, clean wood blocks, clean gravel aggregate, etc. without appreciably affecting strength.

OSMOWELD PRICE SCHEDULE

(F.O.B. Buffalo, N. Y.)

OSMOWELD

Supplied in calking tubes containing 12 oz., 12 tubes per carton. Shipping weight per tube: 14 oz.

Under 12 tubes	$2.40 per tube
12 tubes and over	$2.25 per tube

OSMOWELD REINFORCING SPACERS

½″ x ¾″ x 4′. Southern Yellow Pine, treated with Osmose K-33 wood preservative. Shipped 12 strips per carton.

Shipping weight: 5 lbs. per carton.	$2.80 per carton

OSMOWELD FORMS

Specially coated aluminum foil laminated to flexible, heavy kraft paper in roll 24″ x 10′.

Shipping weight per roll: 1 lb.	$ .50 per roll

MASKING TAPE

3″ x 108′ pressure sensitive industrial grade

Shipping weight: 1 lb.	$9.00 per roll

TREATED WOOD DOWELS

7/16″ x 3″. Shipping weight per 1000: 12 lbs.	$7.50 per thousand

OSMOWELD PCP PENTA CONCENTRATE WOOD PRESERVATIVE

Mix 1 part concentrate to 10 parts mineral spirits to obtain 5% Penta solution. Shipping weight of 5 gallon pail: 55 lbs. $1.95 per gallon

Prices effective October 1, 1967

OSMOSE SPECIFICATION SHEET

REANCHORING DRIFT PIN – RESTORING BEARING AREA

1. **PURPOSE** – To make drift pin secure in top area of piling and to rebuild the cap-piling bearing surface where decay has reduced the bearing area.

2. **DIAGRAM** – (at right)

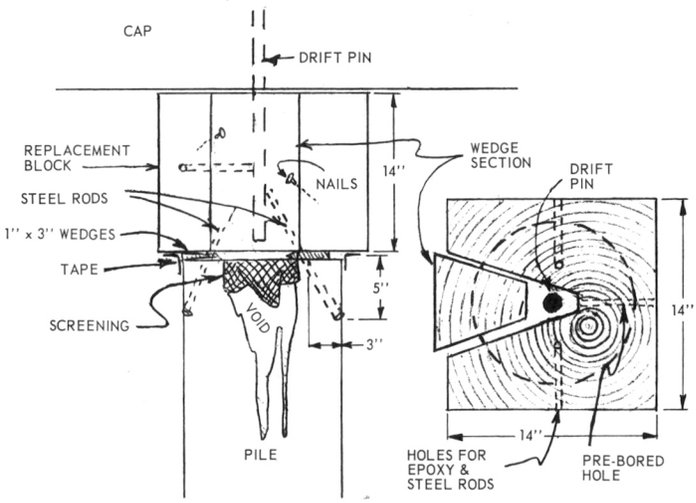

3. **BILL OF MATERIALS** –

(a) Pre-cut 14" wood replacement section (pressure treated).
(b) Plastic screening – or equivalent.
(c) OsmoWeld (epoxy resin).
(d) Large nails to secure replacement section.
(e) Three 1" x 3" treated wood wedges.
(f) Treated wooden dowels 7/8" x 3".
(g) 3" pressure sensitive tape.
(h) Deformed reinforcing rod 3/8" x 14".

4. **METHOD** –

(1) Limits of decay are determined by borings and shell thickness indicator. Piling having little or no decay below the drift pin area should be noted for this special process of rehabilitation.

(2) A template or jig is used to measure down exactly 14¼" from the cap. The decayed section is cut away leaving the drift pin exposed.

(3) If the cut-off exposes interior decay pockets in the top of the remaining section, it is stuffed with screening or other stuffing material and the surface is leveled off with OsmoWeld. The 14" replacement section is tested as to fit. The new section is rotated to find the best position in case drift pin is off center. A piece of the wedge is chopped away so that drift pin is cleared by wedge when wedge is inserted.

(4) The top and bottom surfaces of the replacement block and the groove and wedge are then wetted with epoxy. The block is set in place and the wedge of the new piece is nailed in place. Three flat wedges are inserted under new piece about 120° apart to force it against cap.

(5) The joint is taped at the top of the pile cut-off. Two holes are bored 180° apart upward at a 60° angle from sound wood in the pile through the joint and into the replacement block. If the vertical joints of the wedge are open, it may be necessary to tape them also. Staples are used to secure the tape in position.

(6) OsmoWeld is prepared and forced to refusal through the three bored holes. The holes are plugged. In case drift pin has been previously removed, Owner may desire to have two steel reinforcing rods inserted at a 60° angle from the block into the cap. If these two holes are drilled, it is suggested that OsmoWeld be pumped to refusal in these holes. In this case a solid block without wedge cut out may be used.

(7) Best results are obtained by co-ordinating the shimming when there will be no loading on the pile. Usual precautions regarding train travel are required. The epoxy will set-up in about 3 hours on warm days. The thinner the coating and the cooler the ambient temperature, the longer the set-up time.

(8) The cut off area and the wedge are kept free of loose dirt or free oil. Do not attempt to use OsmoWeld at temperatures below 35° F. On cool days keep the tubes warm for faster set-up action. Allowing OsmoWeld to remain in the tube until the curing action warms the tube to the touch will also shorten the set-up time.

© 1967 OSMOSE WOOD PRESERVING CO. OF AMERICA, INC.

OSMOSE SPECIFICATION SHEET

POSTING PILING

1. **PURPOSE –** To replace a section of deteriorated piling and restore strength to a structure in lieu of re-driving the entire pile.

2. **DIAGRAM –** (at right)

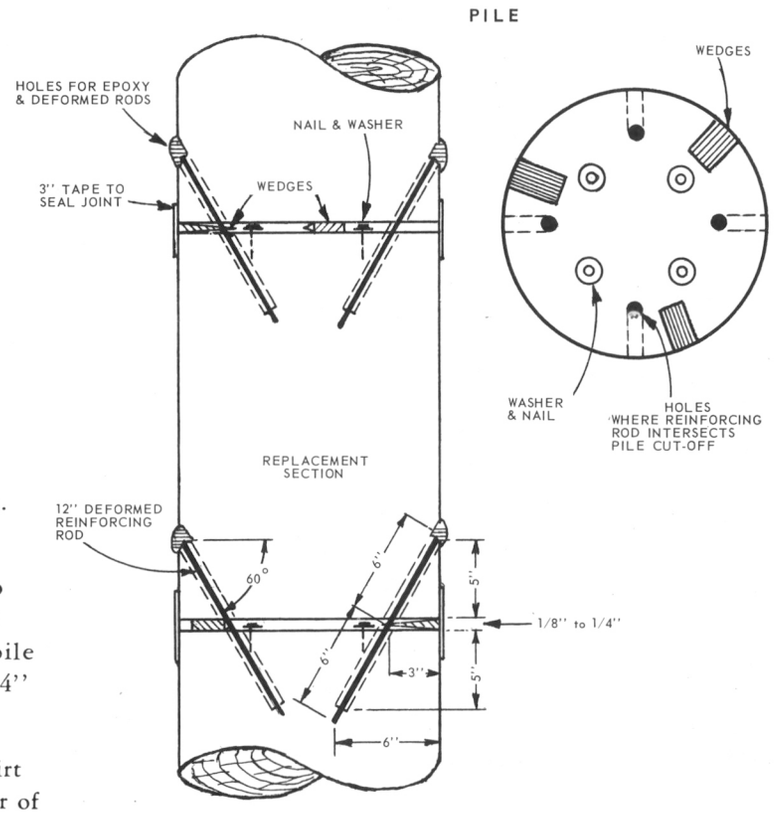

3. **BILL OF MATERIALS –**

   (a) Pile section for posting
   (b) OsmoWeld epoxy resin compound
   (c) Roofing nails and metal washers
   (d) 1" x 3" wooden treated wedges (3 per joint)
   (e) 3" pressure sensitive tape
   (f) Deformed reinforcing rod 3/8" x 12" (4 per joint)

4. **METHOD –**

   (1) Limits of decay are determined by borings and shell thickness indicator.

   (2) Deteriorated section is cut away and removed. All cuts are made at 90° to line of pile except the top cut should be in line with the cap when posted pile extends to the cap. About 1/8" to 1/4" space is allowed at top and bottom.

   (3) Cut surfaces are kept free of loose dirt or oil and are wetted with a thin layer of OsmoWeld. Four washers, secured with roofing nails, are placed on top and bottom of new section, one to each quadrant.

   (4) Replacement section is positioned and any sway bracing or other lateral support members are refastened prior to making the weld. Treated wooden wedges (3 each placed 120° apart) are inserted flush with the pile surface to take up slack and maintain constant joint opening during the curing of the epoxy.

   (5) Pile surfaces next to joints are trimmed to match and tape is wrapped around each joint to contain epoxy.

   (6) Four 3/8" x 11" holes are bored at a steep angle (about 60° to the horizontal) starting at a point about 5" above each joint and spaced 90° apart around the pile. Care is taken that spacing is proper to miss the washers in the joint area. When drilling is completed at each joint, OsmoWeld is applied to refusal in each hole and the deformed rods rammed home. These should be driven beyond pile surface and patched over with OsmoWeld.

   (7) Step No. 6 should be completed within one hour of wetting the cut surface of the joint described in step No. 5 above.

   (8) Best results are obtained by scheduling this work when there will be little or no vibrating loading on the structure. Usual precautions regarding train traffic are required. The epoxy will set up in about three hours on warm days. The thinner the coating and the cooler the ambient temperature, the longer the set-up time.

   (9) Do not attempt to use OsmoWeld at temperatures below 35°F. On cool days keep the tubes warm for faster set-up action. Allowing OsmoWeld to remain in the tube until the curing action warms the tube to the touch will also shorten the set-up time.

©1966 OSMOSE WOOD PRESERVING CO. OF AMERICA, INC.

For Additional Copies
Request Form 7000.4

OSMOSE SPECIFICATION SHEET

APPLYING HEAT WHEN POSTING WITH OSMOWELD AT TEMPERATURES BELOW 45° F.

1. **PURPOSE** – To speed up the curing time of an OsmoWeld joint when posting piling in accordance with Specification 141.3 or Specification 141.2, when the air temperature is below 45° F.

2. **DIAGRAM** – (at right)

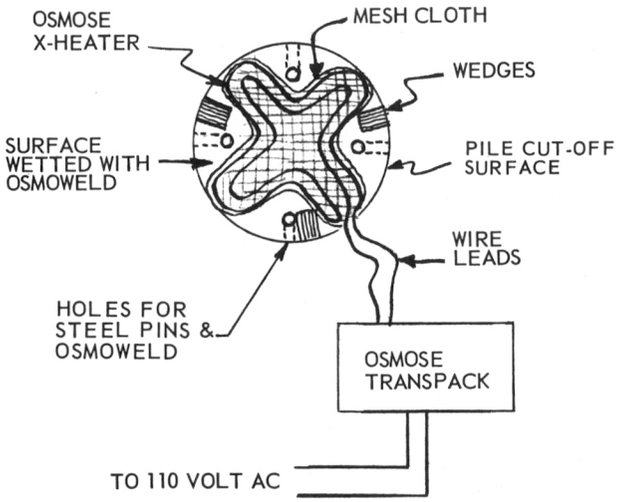

3. **BILL OF MATERIALS** –
   (a) Usual posting materials as outlined in Specification 141.3.
   (b) 110-120V AC power source.
   (c) Osmose Transpack. (Available from Osmose at $118.00 F.O.B. Buffalo.)
   (d) One Osmose X-Heater wire grid for each joint to be heated. (Available from Osmose at $1.90 each F.O.B. Buffalo and packaged in cartons of 12 each.)

4. **METHOD** –

   (1) The method contained in the Specifications referred to above is followed until the cut surfaces are wetted with OsmoWeld.

   (2) The wire grid is patted onto the cut surfaces as shown in the diagram and pile is marked so that the holes for the pins may be drilled without cutting the grid. The OsmoWeld allows the grid to adhere to the surface without fastenings.

   (3) The remaining steps of the method contained in the Specifications referred to above are followed until posting is completed. Care should be used not to dislodge the wire grid when putting replacement piece of pile in place.

   (4) Transpack is nailed to piling so that lead wires can reach both ends of replacement section if both are to be heated at the same time. Twelve feet of lead wire are supplied on each side of the unit.

   (5) The controls on the left side of the face of the unit are for the lead wires on that side and the controls on the right are for the leads on the right side. Make sure that all three switches on the face of the unit are in the "off" position. Lead wires (either channel – right or left) are connected to the lead-in wires extending out of the posting joint from the wire grid.

   (6) Transpack is then connected to a 110-120V AC power source. Main switch (center) is turned "on" and then the channel(s) being used is (are) turned to "on" position. Timer is set for desired time.

   NOTE: The heating time as set by the timer will depend upon the ambient temperature at the time the posting is done. The wire grid will heat the OsmoWeld and speed set-up action. At temperatures around 10° F., the timer can be set for from 10 to 15 minutes. Less time is required as the ambient temperature goes up.

   (7) Proper operation is indicated when channel light is lit and ammeter reads between 2.4 and 3.0 amps.

   (8) A meter reading of zero with channel light off indicates an open circuit breaker. Breaker is reset by one push of black rubber button. A check of the channel light bulb may be necessary. Spare bulbs are stored at the side of the unit under the wire loops. A meter reading of zero with channel light lit indicates an open circuit. Re-check all leads and connections. If condition persists after recheck, the wire grid is broken within the joint and will not heat. The OsmoWeld will set-up more slowly according to directions on the label. Constant resetting of circuit breaker indicates a short circuit. Check all lead wires. If condition persists after recheck, the wire grid is shorted and will not heat properly. The OsmoWeld will cure more slowly as shown on label instructions.

   NOTE: OsmoWeld will mix and apply more easily if it is heated in a warming oven or placed near a heater prior to use.

© 1967 OSMOSE WOOD PRESERVING CO. OF AMERICA, INC.

Printed in U.S.A.

For Additional Copies
Request Form 7000.5

OSMOSE SPECIFICATION SHEET

SHIMMING WITH OSMOWELD

1. **PURPOSE** – To correct the load distribution between cap and piling of timber bridges where improper cut-off or settling of piling has created poor bearing contact.

2. **DIAGRAM** – (at right).

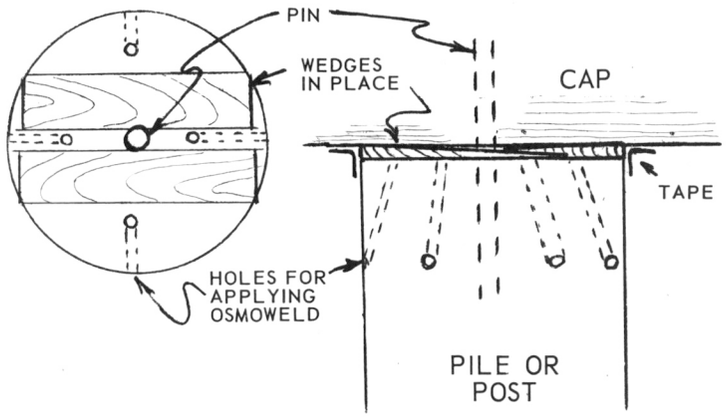

3. **BILL OF MATERIALS** –

   (a) 1'' Wedges, 4'' wide and 8'' long.
   (b) OsmoWeld epoxy resin compound.
   (c) 3'' Pressure sensitive tape.
   (d) 2'' Treated wooden dowels.

4. **METHOD** –

   (1) Extent of decay is determined by boring and shell thickness indicator. Piling which are not decayed sufficiently to reject, but which are not in contact with bottom of cap, are subjects for shimming.

   (2) Wedges, sufficient to close the space, are selected and driven in from opposite sides of the pile, so that their thin parts overlap along side the drift pin. Additional wedges are driven in on the other side of the pin. All wedges are driven or broken off so that no part of them extend beyond the face of the piling.

   (3) Four holes are drilled up from the piling to intersect the joint in such a manner that the OsmoWeld will fill in the remainder of the joint as shown in the diagram.

   (4) The joint is taped all around to contain the OsmoWeld, and the tape is stapled tight to withstand the pressure that will be exerted from within the weld area when the OsmoWeld is applied.

   (5) OsmoWeld is forced in to refusal and all holes plugged.

   (6) The OsmoWeld will set-up in about three hours on warm days. The thinner the coating, and the cooler the ambient temperature, the longer the set-up time.

   (7) Do not attempt to use OsmoWeld at temperatures below 35° F. On cool days, keep the tubes warm for faster set-up action. Allowing OsmoWeld to remain in the tube until the curing action warms the tube to the touch will also shorten the set-up time.

©1967 OSMOSE WOOD PRESERVING CO. OF AMERICA, INC.
PRINTED IN U.S.A.

3505

from the

BRIDGE INSPECTION & TREATING DIVISION

OSMOSE WOOD PRESERVING CO. OF AMERICA, INC., BUFFALO, N. Y.
980 ELLICOTT STREET • PHONE: TT 2-5905

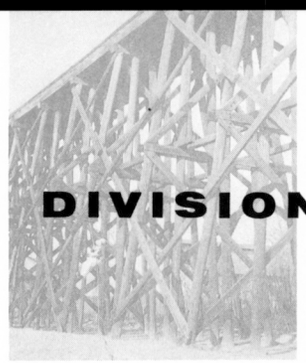

FROM

TO

FILE

MEMORANDUM NO. 23

REVISED SPECIFICATIONS - OSMOWELD

OsmoWeld is celebrating its sixth anniversary this month.

Almost six years ago to the day, a number of piles were posted on a ballast deck pile trestle carrying main-line high speed traffic on a mid-western road. Due to the moisture sealing and the adhesive properties of OsmoWeld, those piles remain in perfect structural condition today.

And yet, improvements have been made --- both in formulating and in application techniques. To keep you current on these improvements, we are enclosing the following latest specifications for your file:

OsmoWeld Data Sheet	-	7000.2b
Reanchoring Drift Pin	-	141.2c
Posting Piling	-	141.3b
Heating OsmoWeld	-	7000.4
Shimming	-	7000.5

If you would like additional copies for distribution to your field personnel, we would be pleased to furnish the required amount.

J. W. Storer
Vice President

ATT-

August, 1967

OSMOSE WOOD PRESERVING CO. OF AMERICA, INC. • 980 ELLICOTT ST., BUFFALO, N. Y. 14209 • PHONE AREA CODE 716 • 882-5905

For Additional Copies
Request Form7000 .1c

OSMOSE DATA SHEET

OSMOWELD

Epoxy resins have demonstrated remarkable characteristics of strength and adhesion which are finding ever-increasing uses in industry. OsmoWeld is a specially designed compound which, when cured, is stronger than wood and can be sawn, drilled, sanded, and painted. Nails and screws cannot be applied in the same manner as they can be to wood, but they can be coated with OsmoWeld and inserted into pre-bored holes, for superior holding qualities.

1. Uses — Industrial heavy-use applications are practically limitless in that OsmoWeld possesses such high strength characteristics and bonds to most other materials including wood, steel and concrete. The present formulation sets up and bonds strongly when applied to wet surfaces and even under water.

The most common and major uses employed by railroads and utilities to date include the following:

- Posting (splicing) piling.
- Shimming to improve load-bearing characteristics.
- Filling voids, checks, cracks, splits, and repair of mechanical damage.
- Repairing woodpecker holes in poles and piling.
- Patching concrete. This is worthy of special note in that concrete cracks do not have to be chipped out—only made reasonably clean and free of loose particles.
- Repair of pipe leaks or metal machinery casings.

2. Packaging — Both the hardener and the resin compounds are contained in a standard 12 oz. calking tube. Just prior to use, they are mixed in the tube by means of a special gasket and mixing tool—one each of which is included in every carton. Mixing can be performed by hand, but the preferable and faster method employs the use of a ¼" electric drill.

3. Storage — Maximum storage life is not as yet established for present formulation, but minimum shelf life is a period of one year following receipt.

4. Temperature Range — Current OsmoWeld formulation, improved from the original, will set up after mixing at temperatures approaching 32° F. Various simple methods can be employed to keep the material "warm" in cooler temperatures. Setup time at 70° F. is in the 20 minute range; this period lengthens if the temperature of the material is cooler and is shorter at higher temperatures. Also, the greater the mass or thickness, the higher the internal temperature—and the faster the setup time.

©1967 OSMOSE WOOD PRESERVING CO.

5. Test Data — An independent laboratory, Pittsburgh Testing Laboratory, obtained the OsmoWeld data listed below. Wood control values are obtained from Forest Products Laboratory Technical Bulletin No. 479. Compression strength of OsmoWeld as compared to various species of wood as expressed in pounds per square inch is:

OSMOWELD	WOOD CONTROLS		
	S. Y. Pine	W. R. Cedar	Fir
9,255	7,625	4,360	4,660

6. Some Tips on Use — Without any exception of which we know, people actually mixing and using OsmoWeld become extremely enthusiastic about its characteristics following first exposure to it. Here are a couple of tips that have proven satisfactory in the field.

Keep a supply of denatured alcohol on hand as a cleaning agent. Since the material does not adhere to polyethylene film, that material serves as a good surfacing over cardboard or wooden forms to prevent slump prior to setup in certain instances. Masking tape (industrial grade) can serve the same purpose and is easily removed after setup if desired. At 70° F., each 12 oz. tube results in about 18 cubic inches of void capacity. This capacity can be extended to twice that amount through the use of "fillers" such as treated wood spacer strips, clean wood blocks, clean gravel aggregate, etc. without appreciably affecting strength.

OSMOWELD PRICE SCHEDULE

(F.O.B. Buffalo, N. Y.)

OSMOWELD

Supplied in calking tubes containing 12 oz., 12 tubes per carton. Shipping weight per tube: 14 oz.

Under 12 tubes	$2.40 per tube
12 tubes and over	$2.25 per tube

OSMOWELD REINFORCING SPACERS

½" x ¾" x 4'. Southern Yellow Pine, treated with Osmose K-33 wood preservative. Shipped 12 strips per carton.

Shipping weight: 5 lbs. per carton.	$2.80 per carton

OSMOWELD FORMS

Specially coated aluminum foil laminated to flexible, heavy kraft paper in roll 24" x 10'.

Shipping weight per roll: 1 lb.	$ .50 per roll

MASKING TAPE

3" x 108' pressure sensitive industrial grade

Shipping weight: 1 lb.	$9.00 per roll

TREATED WOOD DOWELS

7/16" x 3". Shipping weight per 1000: 12 lbs.	$7.50 per thousand

OSMOWELD PCP PENTA CONCENTRATE WOOD PRESERVATIVE

Mix 1 part concentrate to 10 parts mineral spirits to obtain 5% Penta solution. Shipping weight of 5 gallon pail: 55 lbs.	$1.95 per gallon

Prices effective October 1, 1967

For Additional Copies
Request Form 141.2c

OSMOSE SPECIFICATION SHEET

REANCHORING DRIFT PIN – RESTORING BEARING AREA

1. **PURPOSE** – To make drift pin secure in top area of piling and to rebuild the cap-piling bearing surface where decay has reduced the bearing area.

2. **DIAGRAM** – (at right)

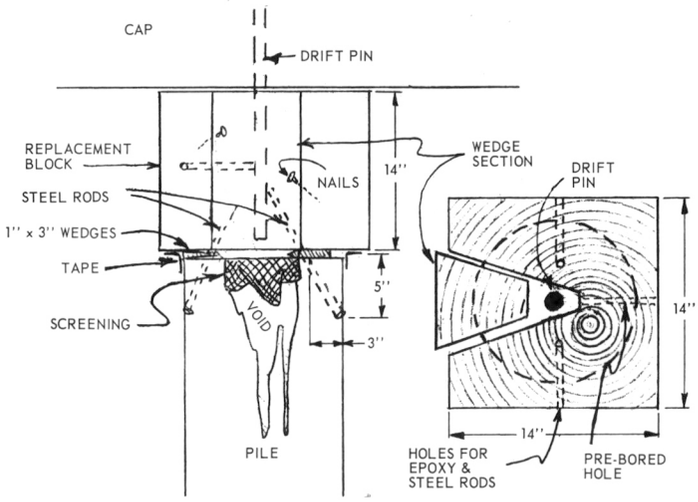

3. **BILL OF MATERIALS** –

(a) Pre-cut 14" wood replacement section (pressure treated).
(b) Plastic screening – or equivalent.
(c) OsmoWeld (epoxy resin).
(d) Large nails to secure replacement section.
(e) Three 1" x 3" treated wood wedges.
(f) Treated wooden dowels 7/8" x 3".
(g) 3" pressure sensitive tape.
(h) Deformed reinforcing rod 3/8" x 14".

4. **METHOD** –

(1) Limits of decay are determined by borings and shell thickness indicator. Piling having little or no decay below the drift pin area should be noted for this special process of rehabilitation.

(2) A template or jig is used to measure down exactly 14¼" from the cap. The decayed section is cut away leaving the drift pin exposed.

(3) If the cut-off exposes interior decay pockets in the top of the remaining section, it is stuffed with screening or other stuffing material and the surface is leveled off with OsmoWeld. The 14" replacement section is tested as to fit. The new section is rotated to find the best position in case drift pin is off center. A piece of the wedge is chopped away so that drift pin is cleared by wedge when wedge is inserted.

(4) The top and bottom surfaces of the replacement block and the groove and wedge are then wetted with epoxy. The block is set in place and the wedge of the new piece is nailed in place. Three flat wedges are inserted under new piece about 120° apart to force it against cap.

(5) The joint is taped at the top of the pile cut-off. Two holes are bored 180° apart upward at a 60° angle from sound wood in the pile through the joint and into the replacement block. If the vertical joints of the wedge are open, it may be necessary to tape them also. Staples are used to secure the tape in position.

(6) OsmoWeld is prepared and forced to refusal through the three bored holes. The holes are plugged. In case drift pin has been previously removed, Owner may desire to have two steel reinforcing rods inserted at a 60° angle from the block into the cap. If these two holes are drilled, it is suggested that OsmoWeld be pumped to refusal in these holes. In this case a solid block without wedge cut out may be used.

(7) Best results are obtained by co-ordinating the shimming when there will be no loading on the pile. Usual precautions regarding train travel are required. The epoxy will set-up in about 3 hours on warm days. The thinner the coating and the cooler the ambient temperature, the longer the set-up time.

(8) The cut off area and the wedge are kept free of loose dirt or free oil. Do not attempt to use OsmoWeld at temperatures below 35° F. On cool days keep the tubes warm for faster set-up action. Allowing OsmoWeld to remain in the tube until the curing action warms the tube to the touch will also shorten the set-up time.

© 1967 OSMOSE WOOD PRESERVING CO. OF AMERICA, INC.

OSMOSE SPECIFICATION SHEET

POSTING PILING

1. **PURPOSE –** To replace a section of deteriorated piling and restore strength to a structure in lieu of re-driving the entire pile.

2. **DIAGRAM –** (at right)

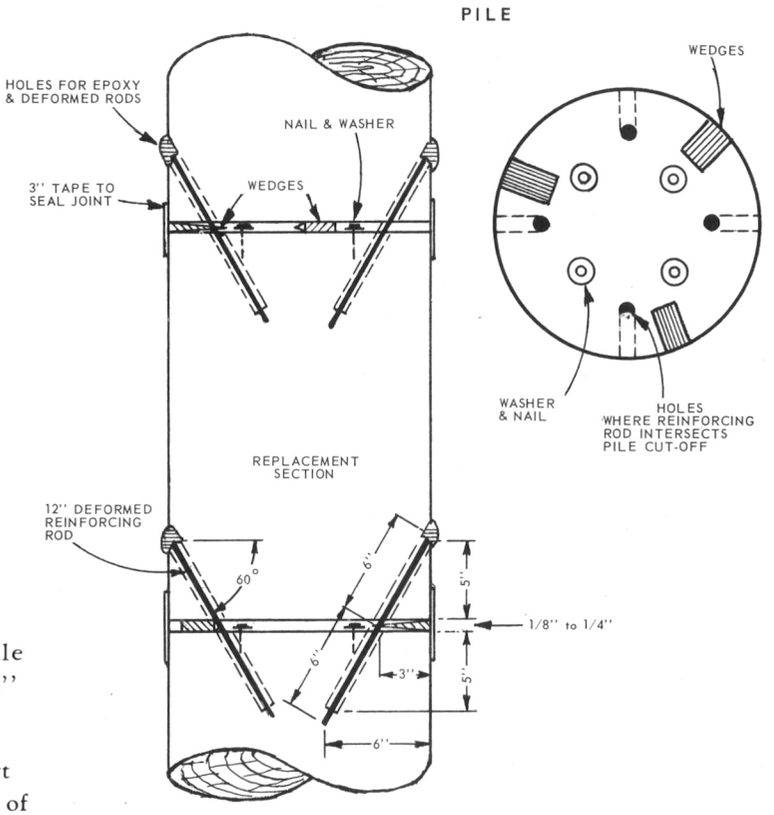

3. **BILL OF MATERIALS –**

   (a) Pile section for posting
   (b) OsmoWeld epoxy resin compound
   (c) Roofing nails and metal washers
   (d) 1'' x 3'' wooden treated wedges (3 per joint)
   (e) 3'' pressure sensitive tape
   (f) Deformed reinforcing rod 3/8'' x 12'' (4 per joint)

4. **METHOD –**

   (1) Limits of decay are determined by borings and shell thickness indicator.

   (2) Deteriorated section is cut away and removed. All cuts are made at 90° to line of pile except the top cut should be in line with the cap when posted pile extends to the cap. About 1/8'' to 1/4'' space is allowed at top and bottom.

   (3) Cut surfaces are kept free of loose dirt or oil and are wetted with a thin layer of OsmoWeld. Four washers, secured with roofing nails, are placed on top and bottom of new section, one to each quadrant.

   (4) Replacement section is positioned and any sway bracing or other lateral support members are refastened prior to making the weld. Treated wooden wedges (3 each placed 120° apart) are inserted flush with the pile surface to take up slack and maintain constant joint opening during the curing of the epoxy.

   (5) Pile surfaces next to joints are trimmed to match and tape is wrapped around each joint to contain epoxy.

   (6) Four 3/8'' x 11'' holes are bored at a steep angle (about 60° to the horizontal) starting at a point about 5'' above each joint and spaced 90° apart around the pile. Care is taken that spacing is proper to miss the washers in the joint area. When drilling is completed at each joint, OsmoWeld is applied to refusal in each hole and the deformed rods rammed home. These should be driven beyond pile surface and patched over with OsmoWeld.

   (7) Step No. 6 should be completed within one hour of wetting the cut surface of the joint described in step No. 5 above.

   (8) Best results are obtained by scheduling this work when there will be little or no vibrating loading on the structure. Usual precautions regarding train traffic are required. The epoxy will set up in about three hours on warm days. The thinner the coating and the cooler the ambient temperature, the longer the set-up time.

   (9) Do not attempt to use OsmoWeld at temperatures below 35°F. On cool days keep the tubes warm for faster set-up action. Allowing OsmoWeld to remain in the tube until the curing action warms the tube to the touch will also shorten the set-up time.

©1966 OSMOSE WOOD PRESERVING CO. OF AMERICA, INC.

For Additional Copies
Request Form 7000.4

OSMOSE SPECIFICATION SHEET

APPLYING HEAT WHEN POSTING WITH OSMOWELD AT TEMPERATURES BELOW 45° F.

1. **PURPOSE** – To speed up the curing time of an OsmoWeld joint when posting piling in accordance with Specification 141.3 or Specification 141.2, when the air temperature is below 45° F.

2. **DIAGRAM** – (at right)

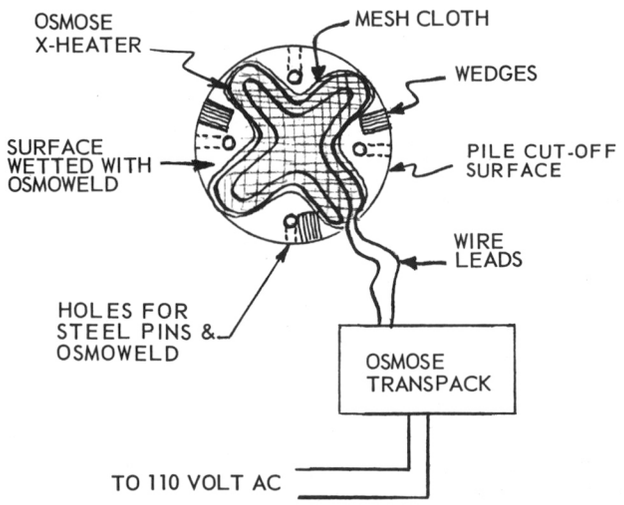

3. **BILL OF MATERIALS** –
   (a) Usual posting materials as outlined in Specification 141.3.
   (b) 110-120V AC power source.
   (c) Osmose Transpack. (Available from Osmose at $118.00 F.O.B. Buffalo.)
   (d) One Osmose X-Heater wire grid for each joint to be heated. (Available from Osmose at $1.90 each F.O.B. Buffalo and packaged in cartons of 12 each.)

4. **METHOD** –

   (1) The method contained in the Specifications referred to above is followed until the cut surfaces are wetted with OsmoWeld.

   (2) The wire grid is patted onto the cut surfaces as shown in the diagram and pile is marked so that the holes for the pins may be drilled without cutting the grid. The OsmoWeld allows the grid to adhere to the surface without fastenings.

   (3) The remaining steps of the method contained in the Specifications referred to above are followed until posting is completed. Care should be used not to dislodge the wire grid when putting replacement piece of pile in place.

   (4) Transpack is nailed to piling so that lead wires can reach both ends of replacement section if both are to be heated at the same time. Twelve feet of lead wire are supplied on each side of the unit.

   (5) The controls on the left side of the face of the unit are for the lead wires on that side and the controls on the right are for the leads on the right side. Make sure that all three switches on the face of the unit are in the "off" position. Lead wires (either channel – right or left) are connected to the lead-in wires extending out of the posting joint from the wire grid.

   (6) Transpack is then connected to a 110-120V AC power source. Main switch (center) is turned "on" and then the channel(s) being used is (are) turned to "on" position. Timer is set for desired time.

   NOTE: The heating time as set by the timer will depend upon the ambient temperature at the time the posting is done. The wire grid will heat the OsmoWeld and speed set-up action. At temperatures around 10° F., the timer can be set for from 10 to 15 minutes. Less time is required as the ambient temperature goes up.

   (7) Proper operation is indicated when channel light is lit and ammeter reads between 2.4 and 3.0 amps.

   (8) A meter reading of zero with channel light off indicates an open circuit breaker. Breaker is reset by one push of black rubber button. A check of the channel light bulb may be necessary. Spare bulbs are stored at the side of the unit under the wire loops. A meter reading of zero with channel light lit indicates an open circuit. Re-check all leads and connections. If condition persists after recheck, the wire grid is broken within the joint and will not heat. The OsmoWeld will set-up more slowly according to directions on the label. Constant resetting of circuit breaker indicates a short circuit. Check all lead wires. If condition persists after recheck, the wire grid is shorted and will not heat properly. The OsmoWeld will cure more slowly as shown on label instructions.

   NOTE: OsmoWeld will mix and apply more easily if it is heated in a warming oven or placed near a heater prior to use.

© 1967 OSMOSE WOOD PRESERVING CO. OF AMERICA, INC.

Printed in U.S.A.

For Additional Copies
Request Form 7000.5

OSMOSE SPECIFICATION SHEET

SHIMMING WITH OSMOWELD

1. **PURPOSE** – To correct the load distribution between cap and piling of timber bridges where improper cut-off or settling of piling has created poor bearing contact.

2. **DIAGRAM** – (at right).

3. **BILL OF MATERIALS –**

   (a) 1'' Wedges, 4'' wide and 8'' long.
   (b) OsmoWeld epoxy resin compound.
   (c) 3'' Pressure sensitive tape.
   (d) 2'' Treated wooden dowels.

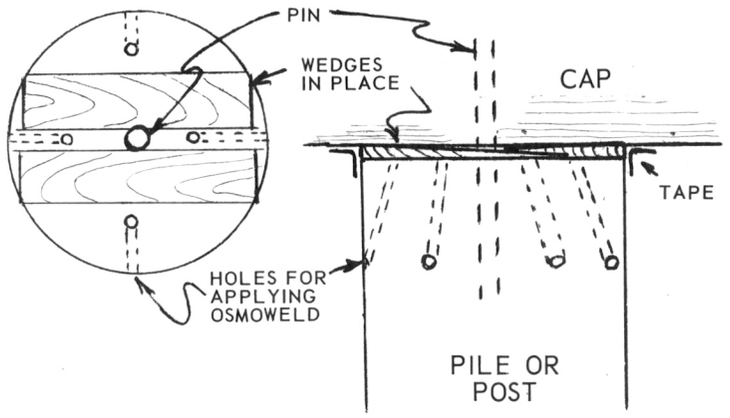

4. **METHOD –**

   (1) Extent of decay is determined by boring and shell thickness indicator. Piling which are not decayed sufficiently to reject, but which are not in contact with bottom of cap, are subjects for shimming.

   (2) Wedges, sufficient to close the space, are selected and driven in from opposite sides of the pile, so that their thin parts overlap along side the drift pin. Additional wedges are driven in on the other side of the pin. All wedges are driven or broken off so that no part of them extend beyond the face of the piling.

   (3) Four holes are drilled up from the piling to intersect the joint in such a manner that the OsmoWeld will fill in the remainder of the joint as shown in the diagram.

   (4) The joint is taped all around to contain the OsmoWeld, and the tape is stapled tight to withstand the pressure that will be exerted from within the weld area when the OsmoWeld is applied.

   (5) OsmoWeld is forced in to refusal and all holes plugged.

   (6) The OsmoWeld will set-up in about three hours on warm days. The thinner the coating, and the cooler the ambient temperature, the longer the set-up time.

   (7) Do not attempt to use OsmoWeld at temperatures below 35° F. On cool days, keep the tubes warm for faster set-up action. Allowing OsmoWeld to remain in the tube until the curing action warms the tube to the touch will also shorten the set-up time.

©1967 OSMOSE WOOD PRESERVING CO. OF AMERICA, INC.
PRINTED IN U.S.A.

June 5, 1967

File: 3505

Ing. Mario Torres Jacobi
Jefe Depto. Via Y Estructuras
Ferrocarriles Nacionales de Mexico
Mexico, D.F.

Dear Sir:

In reference to your letter of May 26th inquiring as to our experience with the Osmoplastic treatment of timber:

We have used the Osmoplastic ground line treatment of untreated cedar piling in pile trestles quite extensively, and have found results to be generally good, as far as stopping external decay in the piling is concerned.

We estimate that the ground line treatment has given six to ten years added service life to most of the untreated cedar pile trestles to which the Osmoplastic treatment has been applied. Some of the Osmosed trestles were not benefited as much as others because internal decay determined the life of the piling. Thus, we now recommend internal treatment along with the external Osmoplastic.

We have not applied Osmoplastic to cross ties.

Very truly yours,

D. H. SHOEMAKER

Chief Engineer

MOW:ic

3505

8093-IMANSA 21.5 x 28 AP. 1018 (65)

G. 13

FERROCARRILES NACIONALES DE MEXICO

DEPARTAMENTO U OFICINA
VIA Y ESTRUCTURAS.

NUMERO 6--FDR--994.

EXPEDIENTE 60----3029.

México, D.F., May 26 th- 1967.

OFFICE OF
CHIEF ENGINEER
JUN 2 1967
NORTHERN PACIFIC RY. CO.
ST. PAUL, MINN.

Mr. D. H. Shoemaker,
Chief Engineer Northern Pacific Railway,
Minnesota, U.S.A.

Dear Sir:

Nearly since last year, we have been using in an experimental way the Osmoplastic product from the Osmose - Wood P. Co. of America Inc., Buffalo, N.L.

For being in better condition of knowing such product, I will thank you to indicate me the obtained results in its use, and also the number of cross-ties treated with -- this product, time of emploiment and the increment o useful - life obtained in cross-ties when appliend the Osmoplastic.

Sincerely Your.

ING. MARIO TORRES JACOBI
JEFE DEPTO. VIA Y ESTRUCTURAS

cc.- Osmose Mexicana, S.A.de C.V.,
Belgrado No. 1 - 3er. Piso.
México 6, D.F.

FDR/dar.

PARA FACILITAR EL TRAMITE LE ROGAMOS
CITAR NUMERO DE EXPEDIENTE

May 17, 1967

3505

Mr. J. W. Storer, Vice President
Railroad Division
Osmose Wood Preserving Company
of America, Inc.
4939 Monona Drive
Madison, Wisconsin 53716

Dear Mr. Storer:

In reference to your request for data concerning Bridges Nos. 27, 37, 46, and 51 on the Mandan North Line:

Bridges Nos. 27 and 37 are both now in the process of being rebuilt.

For Bridges Nos. 46 and 51 distance top of tie to ground line at each bent is as follows:

	Bridge 46	Bridge 51
Bent 1	4.0'	4.5'
2	8.5'	11.0'
3	20.0'	16.5'
4	23.0'	16.5'
5	21.0'	14.0'
6	11.0'	8.5'
7	4.0'	4.2'

Yours very truly,

D. H. SHOEMAKER

Chief Engineer

MOW:bm

3505

OSMOSE WOOD PRESERVING CO. of AMERICA, Inc.

980 ELLICOTT STREET, BUFFALO, NEW YORK 14209 — AREA CODE 716 882-5905

Railroad Division
4939 Monona Drive, Madison, Wisconsin 53716

April 21, 1967

Mr. D. H. Shoemaker, Chief Engineer
Northern Pacific Railway
176 E. 5th Street
St. Paul, Minnesota 55101

Dear Mr. Shoemaker:

Thank you very much for your reply of April 19 concerning the proposed cruising of Bridge 11, Buckley Line, near Enumclaw, Washington.

Our Area Engineer in Vancouver, B.C., Mr. Art Fish, has been notified and he will proceed to make the necessary arrangements through Mr. R. G. Brohaugh, District Engineer, as suggested.

We hope to accomplish this cruising within the next three to four weeks, if at all possible.

We appreciate this opportunity to be of service.

Very truly yours,

John W. Storer

John W. Storer
Vice President

JWS:ef
CC: Art Fish

OFFICE OF
CHIEF ENGINEER

APR 24 1967

NORTHERN PACIFIC RY. CO.
ST. PAUL, MINN.

April 19, 1967

3505

Mr. John W. Storer, Vice President
Osmose Wood Preserving Co. of America, Inc.
Railroad Division
Madison, Wisconsin 53716

Dear Sir:

With reference to your letter of April 17 in connection with cruising of Bridge 11, Buckley Line, near Enumclaw, Washington:

We will have no objections to such cruising at this time, on the basis of the terms stipulated in your letter.

Please have your representative contact Mr. R. G. Brohaugh, District Engineer at Seattle, to make arrangements for the inspection.

I have no real good suggestions for other bridges for you to cruise. I believe I mentioned to you last year that for the past several years we have been maintaining the high trestles on the Snoqualmie Branch on a piecemeal basis using creosote treated timbers, and we expect that this kind of maintenance will reduce our annual cost appreciably. Possibly you may want to check the treatment work you did several years ago on the untreated parts of six bents in Bridge 27.2.

Other possibilities for cruising may be the creosote treated pile bents in the approaches of Bridge 35, Snoqualmie Branch, or the timbers in the 250' combination truss span in Bridge 8, Orting Branch. The bents in Bridge 35 were driven in 1929 and they are about 20' high. The timbers in the Bridge 8 truss were placed in 1940.

Very truly yours,

O. H. SHOEMAKER
Chief Engineer

MOW:mh
cc: Mr. J. E. Hoving - Enc.
Mr. R. G. Brohaugh - Enc.
Mr. V. F. Demarais - Enc.

OSMOSE WOOD PRESERVING CO. of AMERICA, Inc.

980 ELLICOTT STREET, BUFFALO, NEW YORK 14209 — AREA CODE 716 882-5905

Railroad Division
4939 Monona Drive, Madison, Wisconsin 53716

April 17, 1967

Mr. M. O. Woxland, Bridge Engineer
Northern Pacific Railway
176 E. 5th Street
St. Paul, Minnesota 55101

Dear Mr. Woxland:

I had meant to be in St. Paul long before this and wanted to discuss this matter personally. However, my travel schedule has kept me busy elsewhere and I'll have to rely on correspondence.

Some time last year we discussed your Bridge 11 on the Seventh Sub between Buckley and Enumclaw near Auburn, Washington. My notes indicate this is a 1,752' long trestle built of creosoted Fir in 1936. Also, that the bents have been double capped due to a serious drift pin decay condition and the bracing has been reworked completely in the past few years.

Our discussion centered around the cruising of this bridge and my purpose in writing is to see if we might now proceed with such a preliminary inspection. We now have a representative located in Vancouver, B.C. and he could make the necessary arrangements through your Seattle office. Due to the size of this structure, we definitely would want one of our "climbers" available to be able to make test borings in the drift pin areas. This man would be sent out from my office in Madison and due to the time and expense involved, we would like to utilize his abilities to the maximum. In that respect, would it be possible for you to pick out several other bridges in the vicinity that we might cruise while in that area?

As you know, there is no cost and no obligation, on the part of your company, for this preliminary cruising. On completion, you will receive our findings and recommendations and a detailed copy of the boring record obtained. I look forward to hearing from you at your earliest opportunity.

Very truly yours,

John W. Storer

John W. Storer
Vice President

JWS:ef

P.S - Page 2

P.S. In the event that you have no other bridges in that vicinity as subjects for cruising, we would still want to proceed with the cruising of Bridge 11. We could then schedule this with future cruising on the Great Northern and SP&S.

OFFICE OF
CHIEF ENGINEER

OCT 18 1966

NORTHERN PACIFIC RY. CO.
ST. PAUL, MINN.

3505

St. Paul, Minnesota
October 18, 1966

207
(Y-130-2)
(Y-139-2)

Mr. J. P. Titus:

On October 11, 1966, Messrs. Kempe and Bartley inspected a number of bridges on the Rosebud Branch, Yellowstone Ninth Subdivision. The inspection included extensive boring of the stringers in Bridges 6 and 14.

Your letter of October 2, 1964 and my reply of October 6, 1964 are in regard to various timber trestles on the Rosebud Branch, including Bridges 6 and 14, particularly with regard to the effect of the Osmose treatment applied in 1960.

The recent borings at Bridges 6 and 14 indicated that the stringers were still sound.

Daily train service is expected to be restored to this branch in 1968, such service to include a large number of 100-ton coal cars. A cost analysis indicates that cost of replacing stringers on the 1967 construction season, with no trains on the branch, will be about 10% less than replacing stringers after restoration of traffic.

On the basis of normal stringer service life on this branch, the stringers in Bridges 6 and 14 would be due for replacement in 2 to 5 years. This, along with the foregoing cost analysis indication, suggests that replacement of stringers in 1967 is the economical procedure. However, in order to realize some benefit from the 1960 Osmose treatment, and in view of the present sound condition of the stringers, I suggest that the stringers be retained in service until decay or other conditions dictate their replacement.

An evaluation of the Osmose treatment, such as may be obtained from watching the stringers at Bridges 6 and 14, is potentially of value to us.

M. O. WOXLAND

Bridge Engineer

MOW:ds
cc: Mr. D. H. Shoemaker
Mr. S. A. Anderson
Mr. C. W. Bartley

3505

OSMOSE WOOD PRESERVING CO. of AMERICA, Inc.

RAILROAD DIVISION
4939 MONONA DRIVE, MADISON, WISCONSIN 53716 — AREA CODE 608 222-6800

OFFICE OF
CHIEF ENGINEER

OCT 5 1966

NORTHERN PACIFIC RY. CO.
ST. PAUL, MINN.

Subject -- REVISION OF SPECIFICATION

The attached specification for posting piles with Osmoweld includes several important revisions -- each designed to improve the method and achieve best possible results.

Certain changes are simply the result of five years experience and others are due to a recent revision in the Osmoweld formulation itself.

This revised specification is now recommended procedure and is effective immediately.

We will be pleased to supply additional copies of this specification for distribution to your staff and/or field personnel, upon request.

John W. Storer
Vice President

September, 1966

Att.

For Additional Copies
Request Form 141.3b

OSMOSE SPECIFICATION SHEET

POSTING PILING

1. **PURPOSE –** To replace a section of deteriorated piling and restore strength to a structure in lieu of re-driving the entire pile.

2. **DIAGRAM –** (at right)

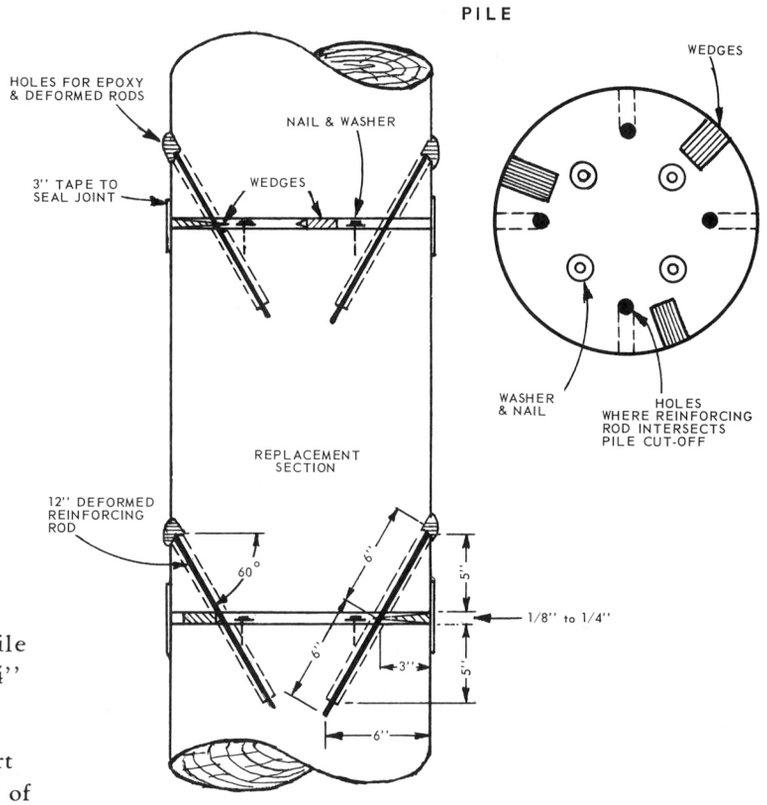

3. **BILL OF MATERIALS –**

   (a) Pile section for posting
   (b) OsmoWeld epoxy resin compound
   (c) Roofing nails and metal washers
   (d) 1" x 3" wooden treated wedges (3 per joint)
   (e) 3" pressure sensitive tape
   (f) Deformed reinforcing rod 3/8" x 12" (4 per joint)

4. **METHOD –**

   (1) Limits of decay are determined by borings and shell thickness indicator.

   (2) Deteriorated section is cut away and removed. All cuts are made at 90° to line of pile except the top cut should be in line with the cap when posted pile extends to the cap. About 1/8" to 1/4" space is allowed at top and bottom.

   (3) Cut surfaces are kept free of loose dirt or oil and are wetted with a thin layer of OsmoWeld. Four washers, secured with roofing nails, are placed on top and bottom of new section, one to each quadrant.

   (4) Replacement section is positioned and any sway bracing or other lateral support members are refastened prior to making the weld. Treated wooden wedges (3 each placed 120° apart) are inserted flush with the pile surface to take up slack and maintain constant joint opening during the curing of the epoxy.

   (5) Pile surfaces next to joints are trimmed to match and tape is wrapped around each joint to contain epoxy.

   (6) Four 3/8" x 11" holes are bored at a steep angle (about 60° to the horizontal) starting at a point about 5" above each joint and spaced 90° apart around the pile. Care is taken that spacing is proper to miss the washers in the joint area. When drilling is completed at each joint, OsmoWeld is applied to refusal in each hole and the deformed rods rammed home. These should be driven beyond pile surface and patched over with OsmoWeld.

   (7) Step No. 6 should be completed within one hour of wetting the cut surface of the joint described in step No. 5 above.

   (8) Best results are obtained by scheduling this work when there will be little or no vibrating loading on the structure. Usual precautions regarding train traffic are required. The epoxy will set up in about three hours on warm days. The thinner the coating and the cooler the ambient temperature, the longer the set-up time.

   (9) Do not attempt to use OsmoWeld at temperatures below 35°F. On cool days keep the tubes warm for faster set-up action. Allowing OsmoWeld to remain in the tube until the curing action warms the tube to the touch will also shorten the set-up time.

©1966 OSMOSE WOOD PRESERVING CO. OF AMERICA, INC.

OSMOSE WOOD PRESERVING CO. OF AMERICA, INC. • 980 ELLICOTT ST., BUFFALO, N. Y. 14209 • PHONE AREA CODE 716 • 882-5905

For Additional Copies
Request Form 7000.1b

3505

OSMOSE DATA SHEET

OFFICE OF
CHIEF ENGINEER
JUL 21 1966
NORTHERN PACIFIC RY. CO.
ST. PAUL, MINN.

IMPROVED OSMOWELD (EPOXY RESIN) FORMULATION

This Data Sheet serves as an addenda to that entitled "OSMOWELD 16-1", Form 7000.1a, issued 1962.

As might reasonably be expected of an important new material, usage under actual working conditions can point the way to improvements in an original formulation. Two basic improvements are now incorporated in OsmoWeld. They are:

1. **Cold Weather Application** — It is now possible to produce requisite strength factors at temperatures as low as 35°. The new labeling in this respect reads as follows: "OsmoWeld can be applied at temperatures as low as 35° F. although setup time is longer in lower temperature ranges. For ease of mixing and to shorten setup time, it is recommended that tubes be kept warm (over 50°) prior to mixing and application."

2. **Moist or Wet Wood** — The new formulation has the additional advantage in its ability to adhere to moist or wet wood.

   It also possesses the capability of setting up under fresh or salt water permitting its use for posting wood piling under such conditions.

Compression and flexual tests of the new material show it to equal or exceed that of the 16-1 formulation which it replaces as described in section 8. Test Data of the original Data Sheet. Detailed strength results are available upon request.

OsmoWeld continues to be packed in a single 12 ounce calking tube and the two components are easily mixed in the tube just prior to application. Each tube contains sufficient material to occupy approximately 18 cubic inches. In some cases, such as filling voids, fillers can be employed to double the volume of space filled per tube.

April, 1966

CAUTION: Strong sensitizer. Epoxy resin may cause severe eye and skin burns or dermatitis. Use with rubber gloves and protective clothing. If skin is subjected to contact, clean with denatured alcohol and scrub with soap and water. Avoid breathing of fumes or vapor. Use with adequate ventilation. Keep out of reach of children.

DIRECTIONS: For maximum strength in filling voids in wood, remove all deteriorated wood possible prior to application. If void is sufficiently large, incorporate wood spacer strips of convenient size in quantity up to 50% of space to be replaced. When bonding two surfaces, each must be thoroughly clean. Coat, and work onto both surfaces prior to joining.

OsmoWeld

EPOXY RESIN COMPOUND

FORMS A STRONG CONTINUOUS BOND WITH WOOD, AS WELL AS METAL, CONCRETE, GLASS AND OTHER COMMON MATERIALS. CAN BE SANDED, DRILLED, AND SAWED.

MIXING AND APPLICATION

The material is simple to mix and is designed for application through a standard calking gun. A mixing tool and gasket accompany every shipment. The mixing tool is designed so that it may be used for either hand mixing or as an attachment to a ¼" drill. The gasket fits over the open end of the tube and prevents spillage during the mixing operation.

1. Hand Mixing. Remove plug at the end of the tube. Insert mixer and place gasket in position. Push mixer back and forth the full length of the tube approximately 50 times. This takes about 2 minutes.

Remove mixer and gasket, re-insert original plug, and slip into calking gun. Pierce nozzle diaphragm with nail or sharp stick and the material is ready for application.

2. ¼" Drill Mixing. This is the speedier method and recommended whenever more than a few tubes are to be used and where electricity is available.

Break off tool handle at notch on shaft. Attach tool to drill. Insert mixer in tube and position gasket. Mixing requires about 20 full strokes and can be performed in approximately 1 minute.

Remove mixer and gasket, re-insert original plug, and slip into calking gun. Pierce nozzle diaphragm with nail or sharp stick and the material is ready for application.

3. Cold Weather Application. OsmoWeld can be applied at temperatures as low as 35° F. although setup time is longer in lower temperature ranges. For ease of mixing and to shorten setup time, it is recommended that tubes be kept warm. (over 50° F.) prior to mixing and application.

4. Clean Up. Use alcohol for ready removal of material from skin, tools, or work area. If mixing tool and gasket are to be kept for future use, OsmoWeld should not be allowed to set up on them. This can be prevented by removing gasket from mixer and wiping both with a piece of cloth or tissue. If more convenient, the mixing tool can be placed in a container of alcohol between periods of use.

CALKING GUN. In order to avoid waste, the calking gun should be of the type in which the plunger goes all the way to the opening of the gun.

COMPLETE MIXING IS ACHIEVED WHEN THE COLOR IS UNIFORM WITHOUT STREAKS.

QUANTITY: 12 oz.av. This amount is sufficient to fill a void of approximately 18 cubic inches without spacer wood, or 36 cubic inches with 50% spacer wood.

OSMOSE WOOD PRESERVING CO. OF AMERICA, INC., 980 ELLICOTT STREET, BUFFALO, N. Y. 14209

N. P. 1386 A 12-24

TELEGRAM—BE BRIEF

TIME FILED M.

3 05

OFFICE OF CHIEF ENGINEER

FEB 23 1966

NORTHERN PACIFIC RY. CO. ST. PAUL, MINN.

1826 494-1 776-7

St.Paul, Minnesota
February 23, 1966

H. C. Wiemer, Tacoma

Supplementing my letter of February 16 about shipping timber posts from Bridge 27.2 Snoqualmie Branch, we are now requested to ship all of post 6, bent 8, cutting the post into two sections at mid point for convenience in shipping. Mail cys DHS DHK LLG RGB CMR, MOW-231.

MOW:mm

M O WOXLAND 1:45 PM

Mail copies: D.H.Shoemaker
D.H.King
L.L.George
R.G.Brohaugh
C.M.Rea

3505

Br 27.2

OFFICE OF
CHIEF ENGINEER
FEB 17 1966
NORTHERN PACIFIC RY. CO.
ST. PAUL, MINN.

St. Paul, Minnesota
February 16, 1966

1826
494-1
776-7

Mr. H. C. Wiemer:

I have recently discussed with your office shipping some of the Osmose treated posts in Bridge 27.2, Snoqualmie Branch, which posts are to be replaced with creosote treated timber in the near future, to the AAR laboratories in Chicago.

Please arrange to send the following posts to Mr. C. M. Rea, Mississippi Street, St. Paul, who will assist in trans-shipping the posts to Chicago by truck:

Post 8 Bent 12, ground deck.
Post 6 Bent 8, ground deck.
Post 3 Bent 8, top deck.

The lower 10' length of these posts is all that is required for testing. Please cut off the top length of the post and mark the bottom length with post and bent number.

Mr. Ulyatt's office has approved use of a foreign car for this shipment, having in mind shipment by rail all the way to Chicago. Now that rail shipment to St. Paul only is necessary, I presume a company service car will be adequate.

M. O. WOXLAND

MOW:cw

Bridge Engineer

cc: Mr. D. H. Shoemaker
Mr. D. H. King
Mr. L. L. George
Mr. E. S. Ulyatt
Mr. R. G. Brohaugh
Mr. C. M. Rea

Mr. Freeman P. Drew, AAR Research Center, 3140 South Federal Street, Chicago, Illinois 60616

3505

St. Paul, February 11, 1966

Mr. M. O. Woxland:

Our discussion about arranging to ship the AAR Testing Lab three pieces of 12"x12"x24' timber being released from one of the frame bridges on the Snoqualmie Branch, which timbers were treated with Osmoplastic.

You may so arrange if you can get the Burlington to allow free freight from St. Paul to Chicago.

DHS/jwm

D. H. SHOEMAKER

3505

MANUFACTURERS OF OSMOSALTS : OSMOPLASTIC : PENTOX : COP-R-NAP : OZ

OSMOSE WOOD PRESERVING CO. of AMERICA, Inc.

930 ELLICOTT STREET, BUFFALO, NEW YORK 14209 — AREA CODE 716 882-5905

OFFICE OF
CHIEF ENGINEER

JAN 28 1966

NORTHERN PACIFIC RY. CO
ST. PAUL, MINN.

Reply to: 4939 Monona Drive
Madison, Wis. 53716
Area Code 608 — 222-6800

January 27, 1966

Mr. D. H. Shoemaker, Chief Engineer
Northern Pacific Railway Company
176 E. 5th Street
St. Paul, Minnesota 55101

Dear Mr. Shoemaker:

I have just finished reading the article in January's "Track and Structures" covering your ground-line treating program on untreated branch line trestles.

We naturally are quite pleased with the article and are proud of the excellent 10-year service record portrayed.

This ground-line treating program initiated in 1955 was the first of its type within the railroad industry. Since that date, ground-line treating of piles with Osmoplastic has become a standard procedure on many of the nation's railroads.

We want to take this opportunity to express our sincere appreciation for your continued confidence in our company and its products and services -- designed to extend the life of timber structures.

Very truly yours,

John W. Storer
Vice President

JWS:ef

3505

MANUFACTURERS OF OSMOSALTS : OSMOPLASTIC : PENTOX : COP-R-NAP : OZ

OSMOSE WOOD PRESERVING CO. of AMERICA, Inc.

980 ELLICOTT STREET, BUFFALO, NEW YORK 14209 — AREA CODE 716 882-5905

Reply to: RAILROAD DIVISION
4939 Monona Drive
Madison, Wis. 53716

January 5, 1966

Mr. W. R. Bjorklund, Assistant Chief Engineer
Northern Pacific Railway
176 E. 5th Street
St. Paul 1, Minnesota

Dear Walt:

I thought the attached information might be of interest and would appreciate your forwarding to Jack Titus and Maury Woxland.

As a result of this type of factual data, our service is rapidly expanding and 1966 has all the promise of being a fine business year. We hope to have the opportunity of protecting additional structures for your good company and appreciate your continued interest in our service.

Best personal regards,

John W. Storer
Vice President

JWS:ef
Att.

Rec'd 1/12/66

from the

RESEARCH DIVISION

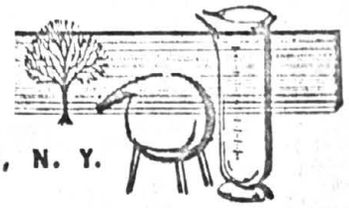

OSMOSE WOOD PRESERVING CO. OF AMERICA, INC. BUFFALO, N. Y.

subject: Southern Pacific Railroad
Quality Control Samples for Penetration and Retention of Pentachlorophenol by Analysis

date: Dec. 28, 1965

Samples were taken from three bridges inspected and treated for this company: Bridge 698.75 in September 1962 and Bridges 662.87 and 693.94 in March 1963. All piling were Douglas fir, originally pressure treated with cresoote.

These piling were internally treated in decayed centers with 24-12 preservative containing pentachlorophenol. Increment borings were taken into the decayed area. Increments for samples were taken in sound wood, measured radially from the internal void toward the outside of the pile.

The attached table shows the results of these analytical tests. With one exception (Bent 2, Pile 5) these results show good to excellent retention in the first two 1/4" increments. Penetration to a full inch into solid wood will arrest the advance of the deterioration from internal decay.

At this moment, without additional information or samples the cause for the one low result is unknown.

George B. Fahlstrom
Director

GBF:aew
Attach.

Southern Pacific Railroad
(Pentachlorophenol, lb./cu.ft.)

Bent #	Pile #	1st 1/4"	2nd 1/4"	3rd 1/4"	4th 1/4"
Bridge 698.75					
63	6	.26	.22	.12	.12
62	6	.17	.12	.12	.10
31	5	.15	.08	.08	.06
2	5	.04	.05	.06	.06
Bridge 662.87					
21 (E)	6	.44	.35	.14	.08
49 (W)	6	.15	.15	.11	.13
12 (E)	6	.25	.14	.11	.10
Bridge 693.94					
29	6	.45	.27	.09	.06
47	6	.28	.16	.11	.09
110	1	.35	.12	.07	.06

12/28/65

from the

RESEARCH DIVISION

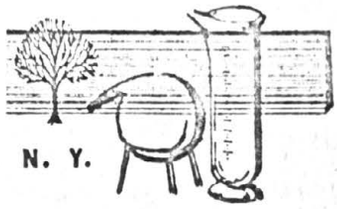

OSMOSE WOOD PRESERVING CO. OF AMERICA, INC. BUFFALO, N. Y.

subject: Spokane, Portland & Seattle R. R.
Bridge No. 43.4 - Wilsonville, Oregon

date: Dec. 28, 1965

Increment boring samples were taken November 15, 1965. This bridge was inspected and treated with 24-12 preservative in April 1963.

Borings were taken into void or internally decayed piles and increments are measured radially from the inside surface of good wood outward. Samples taken between groundline and 4 ft. above-ground. Douglas fir piles originally pressure treated with creosote.

		Pentachlorophenol: lb./cu.ft.			
Bent No.	Pile No.	1st 1/4"	2nd 1/4"	3rd 1/4"	4th 1/4"
85	1	.34	.21	.24	.14
99	1	.12	.07	.06	.04
109	1	.08	.07	.07	.04
109	5	.47	.29	.36	.18
116	1	.12	.06	.05	.06
145	5	.10	.13	.09	.06

These results show good retention in the first 1/4" of sound wood surrounding the decayed center. Penetration is what would be normally expected in sound Douglas fir heartwood. Piles in Bents 85 and 109 show excellent penetration and retention. This may be due to the presence of incipient decay. Retention is adequate to arrest further deterioration.

George B. Fahlstrom
Director

GBF:aew

December 2, 1965

3505
4638

Mr. Merwin H. Dick
Vice President & Editor
Railway Track & Structures
14 E. Jackson Boulevard
Chicago, Illinois 60604

Dear Merwin,

I have your letter of November 30 and returning herewith the article on use of Osmose preserving materials on the Northern Pacific lines. I have corrected the article where necessary. I think the term "100% effective" is a little overstated, inasmuch as we have had excellent results but, of course, there have been instances where a pile probably had gone a little beyond its service life and the resulting ground line treatment could not bring it back to better condition than that in which it was found. In those instances, it has been necessary for us to post or peg a particular pile. However, the inspection which was made last year did not indicate any piling which had to be removed. The way this worked out was that the piling which were ground line treated 10 years ago were, of course, much better than the piling which we treated with ground line Osmose salts, say, in 1960 or '61.

I would like also to change the statement that we used untreated timber 100% on the Northern Pacific, as this again is not quite true. We have used treated timber bridges particularly on our Western lines where the decay is more severe for many years. The untreated structures were mostly confined to the drier portions of the Northern Pacific where untreated wood gave us reasonably good service life.

Practically all of our ground line treatment is on the Eastern District of the Northern Pacific. I would say if I had to guess at a figure, probably 90%, at least, of the ground line treatment is lines east of Livingston, or the Eastern District. Further, all such ground line treatment is covered by what we refer to as a Form 134 which is our annual bridge inspection made by our District Engineer, who prepares the program for the following year, and only the bridges shown on that bridge form are the ones which are treated as the bridge crew moves over a particular subdivision on bridge and culvert repairs. We have now given the ground line treatment to all untreated Cedar piling which are in sufficiently good condition to justify the added expense. Therefore, we have not been treating any piling at ground line for two or three years.

Trusting the foregoing gives you the information you need, I remain

Most sincerely yours,

D. H. SHOEMAKER

enc.

December 1, 1965

3505

Mr. John Storer, Vice President
Osmose Wood Preserving Co. of America, Inc.
Railroad Division
4939 Monona Drive
Madison, Wisconsin 53716

Dear John:

I have your letter of October 1, which was inadvertently inserted in the file before I had a chance to answer you concerning miles of timber bridges maintained by the Northern Pacific.

We have 2.0 miles of ballast deck bridges; 39.3 miles of open deck timber bridges; making a total of 41.3 miles of timber bridges.

Most sincerely yours,

W. R. BJORKLUND

WRB:mo

3505

RAILWAY
Track and Structures
14 EAST JACKSON BLVD., CHICAGO, ILLINOIS 60604 312-427-3501

November 30, 1965

OFFICE OF
CHIEF ENGINEER
DEC 1 1965
NORTHERN PACIFIC RY. CO.
ST. PAUL, MINN.

Mr. D. H. Shoemaker
Chief Engineer
Northern Pacific Railway Co.
176 East 5th St.
St. Paul, Minn., 55101

Dear Doug:

I refer you to an exchange of letters we had early in July relative to our desire to prepare an article based on the experience of the Northern Pacific with the ground-line treatment of untreated timber piles using the Osmose method.

Acting on your suggestion, I obtained information for an article from the Osmose Wood Preserving Company, and have now been able to prepare the write-up. A copy is attached for your consideration and approval. When it has been checked and read by all concerned, I will appreciate your returning it to me indicating any corrections that may be found necessary.

Since the article has been scheduled for publication in our January issue, it would be most helpful if you could return it to me at your early convenience. If at all possible, I'd like to have it back not later than December 10.

Your cooperation in giving us permission to prepare an article regarding this interesting subject is very much appreciated.

Yours sincerely,

Merwin Dick

Vice President and Editor

MHD/p
Enc.

3505

MANUFACTURERS OF OSMOSALTS : OSMOPLASTIC : PENTOX : COP-R-NAP : OZ

OSMOSE WOOD PRESERVING CO. of AMERICA, Inc.

980 ELLICOTT STREET, BUFFALO, NEW YORK 14209 — AREA CODE 716 882-5905

Reply to: RAILROAD DIVISION
4939 Monona Drive
Madison, Wis. 53716

October 1, 1965

Mr. W. R. Bjorklund, Assistant Chief Engineer
Northern Pacific Railway Company
176 E. 5th Street
St. Paul, Minnesota 55101

Dear Walt:

There seems to be a very decided difference of opinion as to how many miles of timber railroad bridges remain in the United States and I am attempting to gather this information from each railroad and hope to come up with an accurate figure. I would appreciate having the following information with regard to the timber bridge structures maintained by Northern Pacific:

Ballast Deck	2	miles
Open Deck	39	miles
Total Timber Bridges	41	miles

Please feel free to reply on this letter.

Your cooperation in furnishing this information is greatly appreciated.

Very truly yours,

John W. Storer
Vice President

JWS:ef

WRB Herewith 10/7

10/5

OFFICE OF
BRIDGE ENGINEER
OCT 4 1965
NORTHERN PACIFIC RY. CO.
ST. PAUL, MINN.

from the

BRIDGE INSPECTION & TREATING DIVISION

OSMOSE WOOD PRESERVING CO. OF AMERICA, INC., BUFFALO, N. Y.
980 ELLICOTT STREET • PHONE: TT 2-5905

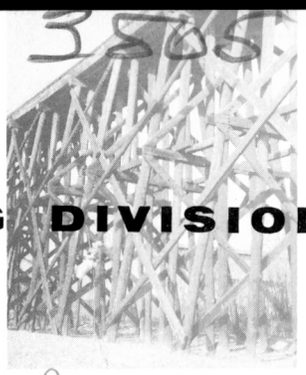

OFFICE OF
CHIEF ENGINEER
SEP 2 1965

FROM

TO

NORTHERN PACIFIC RY. CO.
ST. PAUL, MINN.

FILE

MEMORANDUM NO. 20

IMPROVED PRESERVATIVE FOR PROTECTING PILING CUT-OFFS

It is well known that piling cut-offs represent a vulnerable point of fungus decay because most or all of the end grain penetration of the original preservative treatment is also cut off, thus exposing untreated or insufficiently treated wood in the center area of the piling.

The traditional method of in-place preservation for this vulnerable area has involved applying hot creosote. The attached Osmose Research Division study clearly indicates that the hot creosote method, in addition to being messy and time-consuming, does not perform anywhere near the preservative job as the simple 12 ounce can of 10% penta comprising POLE TOPPER FLUID.

POLE TOPPER FLUID has been widely and successfully used for years for top protection by pole-owning utilities. It can be purchased in cartons of six cans at a price of 35¢ per can, f. o. b. Buffalo, New York.

The preservative, while most important, is not the whole story in protecting piling cut-offs. Protection from weathering and moisture accumulation is the second part of the story. For this purpose Osmose now has PILE TOPPER, a 19" reinforced mastic compound pad, neatly packaged, which can be applied simply and easily in less than a minute following the application of POLE TOPPER FLUID. A Data Sheet describing and pricing PILE TOPPER will shortly be released.

J. W. Storer
Vice President

Att-

August, 1965

from the

RESEARCH DIVISION

OSMOSE WOOD PRESERVING CO. OF AMERICA, INC. BUFFALO, N. Y.

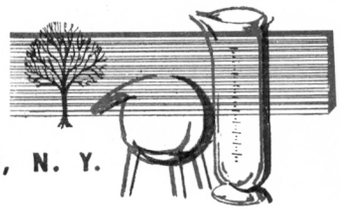

subject: PILING CUT-OFF PROTECTION - COMPARISON

BETWEEN HOT CREOSOTE AND 10% PENTA

date: July 1, 1965

A comparison has been made between hot creosote vs. unheated Osmose POLE TOPPER FLUID (10% penta) as a piling top protective treatment. The penetration of each fluid into the first 1-1/2" of an untreated, unweathered pine section was determined through analysis. The ASTM method D1860-61T was used for the creosote analysis, while the copper-pyridine method was used to analyze for penta.

The pine sample which was treated with POLE TOPPER FLUID was split in half. One half (B) was fitted with a retaining wall around the top, which was made by wrapping it with masking tape. The area of each sample was determined and a volume of POLE TOPPER FLUID equal to 2 milliliters per sq. in of area was measured out. The fluid was poured all at one time into the retaining wall of sample 1B. A slower application was used for sample 1A, without retaining wall, in order that as much as possible of the fluid would soak into the pole top.

A similar procedure was used for the creosote application, except that it was heated to 140 - 150° F. before pouring it onto the pole tops. Sample 2B had a retaining wall, while sample 2A did not.

The treated pine sections were allowed to set for two weeks, after which they were cut up and analyzed to determine the penetration of the test fluids at various depths. The data are as follows:

	Penta Retention - lb/cu. ft.		Creosote Retention - lb. /cu. ft.	
	1A	1B (Wall)	2A	2B (Wall)
First 1/4"	.621	.714	1.85	3.95
Second 1/4"	.438	.422	1.65	2.34
Second 1/2"	.247	.216	1.09	.81
Third 1/2"	.188	.101	.02	-0-

Proper interpretation of the retention and penetration figures in the preceding table involves recognition of the amounts in the wood of each preservative above which fungus decay cannot occur. In common usage, this point is termed threshold of decay. The commonly accepted threshold for penta is .15 - .20 lbs. per cubic foot. For creosote, it is about 5.5 lbs. per cubic foot.

CONCLUSIONS:

1) Judged on the basis of decay threshold, POLE TOPPER FLUID is substantially superior to hot creosote. In the first 1/4" penta retention averages over three times the threshold figure while creosote is not up to its 5.5 lbs. minimum. This superiority increased with greater depths from the surface.

2) There is no substantial difference in results for penta application by forming a retaining wall prior to application. The improvement for hot creosote under this method is limited to the first 1/2".

3) The effective penetration of POLE TOPPER FLUID is greater than that of hot creosote, being at, or almost at, threshold requirements in the third half-inch from the cut-off surface.

4) POLE TOPPER FLUID, being poured from a 12 oz. can, is much simpler to apply than heating and pouring creosote.

Paul E. Gunning
Chief Chemist

3505

MANUFACTURERS OF OSMOSALTS : OSMOPLASTIC : PENTOX : COP-R-NAP : OZ

OSMOSE WOOD PRESERVING CO. of AMERICA, Inc.

980 ELLICOTT STREET, BUFFALO, NEW YORK 14209 — AREA CODE 716 882-5905

Reply to: RAILROAD DIVISION
4939 Monona Drive
Madison, Wis. 53716

July 26, 1965

OFFICE OF
CHIEF ENGINEER
JUL 27 1965
NORTHERN PACIFIC RY. CO.
ST. PAUL, MINN.

Mr. D. H. Shoemaker, Chief Engineer
Northern Pacific Railway Company
176 E. 5th Street
St. Paul 1, Minnesota

Dear Mr. Shoemaker:

During our 12 years of work with the railroad industry, developing and perfecting methods of in-place treatment, we have often been asked for advice regarding protection against marine borers in dock and harbor facilities. Since this would be a natural extension of our services, we have recently completed a detailed investigation of the problem and can now offer what we consider to be a practical and economical answer.

The process and product is known as Pile-Gard, covered by U.S. patents, and we are enclosing descriptive information and literature. This method has been under development for over 9 years and has now reached commercial acceptance.

The Pile-Gard process consists of wrapping the infected portion of a pile with a plastic barrier, normally .030" Polyvinyl Chloride (PVC). The purpose is to create a low oxygen environment around a pile which is lethal to existing borer life, and to prevent new attack through the pliable cover. This is known as the "stagnation principal".

The effectiveness and practicability of pliable barrier encasement on borer infested piles has been proven to our satisfaction and we are now set up to distribute Pile-Gard to the railroad industry.

As a first step, we would like to meet with the proper member of your staff to discuss your particular problems, inspect one or more structures, and come up with specific recommendations. We will consider it a pleasure to arrange a meeting for this purpose, without cost or obligation.

Very truly yours,

John W. Storer

John W. Storer
Vice President

JWS:ef
Enc.

ch facilities. The
riers range from
t of that for new
ly longer service

r test at the Port
ine years and no
ained that would
elected materials.
ile-Gard" barriers
riddled creosoted
Angeles, by diver,
35 per lineal foot.
ere distributed at
al thousand lineal
epths ranging up-
e installation was
y the presence of
braces, which re-

ve been success-
oat, at elevations
thout the use of a
ss than $5.00 per
are being reduced

by greater mechanisation and by applying barriers in concentrated locations. The labour costs and contingent overhead expense are a large percentage of the total expenditure. It is estimated that, in many parts of the United States and in other countries of the world where such labour and overhead charges are relatively low, plastic barriers can be installed for less than $4.00 per lineal foot.

All phases of this relatively new process have been developed in close co-operation with the Port of Los Angeles Testing Laboratory and it now represents a proven commercial proposition. Some 5,000 lineal feet of this plastic barrier is now installed on wharf piling at Los Angeles and the completely satisfactory performance to date has been the basis for acceptance of this process for over 20,000 lineal feet to be applied in the very near future.

In Avalon Bay, California, the Catalina Island Sight-seeing lines two years ago adopted a programme for their Steamer Pier whereby plastic barriers are to be installed on all piling showing 15 per cent, or more, marine borer destruction. This procedure will continue until all piling is completely barrier protected. To date, over 5,000 lineal feet of this plastic barrier are in successful service under this maintenance programme.

The process described in the foregoing is an economical means for greatly extending the useful life of creosoted piling long after the toxicity of creosote has dissipated. It is therefore a factor in promoting the continued use of wood for many wharfs. Once the plastic barriers are installed, the wharf maintenance programme only involves the possible future replacement of these barriers every thirty years, or longer, as compared to the old practice of replacing wood piling in kind at much shorter intervals and at more than twice this unit cost.

REFERENCES

1 "Extending Service Life of Wood Piles in Sea Water," by C. M. Wakeman and L. L. Whiteneck, Spec. Pub. No. 275, ASTM, 1959.

2 "Marine Piling Investigations," National Research Council, by William G. Atwood and A. A. Johnson, 1924.

3 "Marine Borers and Their Relation to Marine Construction on the Pacific Coast." Final Report of the San Francisco Bay Marine Piling Committee, C. L. Hill and C. A. Kofoid, 1927.

DISTRIBUTED BY

OSMOSE WOOD PRESERVING CO.
980 ELLICOTT STREET
BUFFALO 9, NEW YORK

Reprinted from "THE DOCK & HARBOUR AUTHORITY"
Vol. XLII. No. 500 June 1962

Plastic Barriers Preserve Wood Piling

New Defence Against Marine Borers

By L. L. WHITENECK[1]; CARROL M. WAKEMAN[2]; HOWARD E. STOVER[3]

Sooner or later every Harbour Engineer and terminal owner must face the realisation that many of the creosoted wood piles in his wharf structure are being destroyed by marine borers. To extend the utility of these borer ravaged facilities, the engineer has a choice of the following three methods:

(1) Reconstruct the wharf.

(2) Replace destroyed piles and continue to replace them as they deteriorate, realising that the new piles are equally subject to attack.

(3) Preserve by any feasible means those piles which are attacked, but still retain a major portion of their structural integrity.

Choices 1 and 2 represent the old practice of accepting the eventual failure of the creosote protection, allowing the marine borers to penetrate actively into the heartwood and then scheduling future replacements in kind as needed, at unit costs ranging from $300.00 to over $600.00. In regard to Choice 3, many attempts have been made in the past to protect these critically attacked piles in-place with various types of jackets and armour, but most have been abandoned because of excessive cost or other practical limitations. (1) (2) (3)

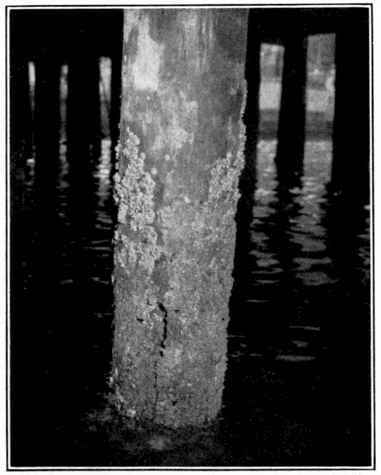

View of typical Borer attack on wooden pile.

Sealing Area of Attack

In-place preservation of critically infested wood piling has always possessed intriguing aspects for reducing the damage by marine borers which costs millions of dollars per annum. Many schemes have been tried by the Port of Los Angeles and other authorities, but none proved to be economically sound until the development, about five years ago, of a patented* method of placing a plastic encasement of film around the piles. This procedure is a simple, practical, effective and relatively inexpensive method for in-place encasement of borer infested piles using long life plastic barriers. This process, called "Pile-Gard"(R) creates a stagnant envelope around the borer attack zones which is lethal to the existing animal life by restricting their oxygen supply and at the same time provides an armour protection against any new attack. There is ample

[1]Chief Harbour Engineer; [2]Testing Engineer, and [3]Assistant Testing Engineer, respectively, Port of Los Angeles, Los Angeles, California.

*"Pile-Gard" is a development of Marine Barriers, Inc., of Avalon, California, U.S.A., and all processes are covered by patents pending in the United States and Foreign Countries.

Prefabricated barrier sections delivered to wharf location.

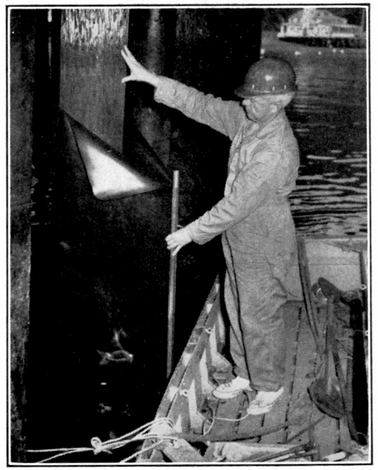

Barrier in place ready for wrapping round pile.

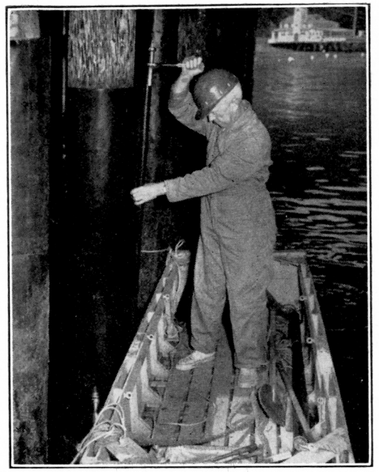

Barrier rolled tight by ratchet assembly.

evidence to indicate that *Limnoriidae* require dissolved oxygen at a concentration of at least 2.5 ppm for their existence. (Normal clean sea water at ambient temperatures contains about 8.5 ppm of dissolved oxygen.) Certain marine bacteria (desulphovibrio) also require oxygen for their growth. Being accomplished chemical engineers, these bacteria are capable of chemically decomposing sulphates in sea water to manufacture their required oxygen supply if the available dissolved oxygen is not sufficient for their needs. In this process they produce hydrogen sulphide as a waste by-product. When plastic barriers are used to encase creosoted piles, particularly those which have been in place for some time, microscopic marine life (consumers of oxygen) are entrapped within the encapsulated water in the annular space. Within several days these animals consume all of the available oxygen supply between the piles and the barrier. In the presence of the bacteria desulphovibrio, sufficient hydrogen sulphide is produced to create an environment lethal to many forms of animal life, certainly to *Limnoria*.

This lethal environment principle has been verified by withdrawing water samples from beneath the barriers by means of tubes projecting through the plastic. In no case was the oxygen content of the water in question higher than 1 ppm after two days of stagnation and in most cases hydrogen sulphide was present in amounts in excess of 50 ppm.

Further proof of this principle was evidenced when 4-in. x 4-in. untreated wood posts, 4-ft. long, were fitted with swaddling plastic tubes covering 3-ft. of the centre section of the posts. In these experiments the annular space (open at both top and bottom) was about $\frac{1}{8}$-in., The posts were examined after being submerged in sea water for several years. *Limnoria* and *Teredo* were found to have penetrated several inches under the open ends of the jackets, but no further. After about nine years' exposure, there has been no instance of either *Teredo* or *Limnoria* penetrating the specified 30 mil polyvinyl chloride.

The design of this plastic encasement consists essentially of a single thin sheet of specification rubber, neoprene, polyethylene, flexible polyvinyl chloride, or other long-life pliable material. Polyvinyl chl[illegible] has been found the most satisfactory for its properties of strength, toughness, and abrasion resistance. It has an anticipated service life in sea water of more than thirty years.

Method of Application

The pile is first surface cleaned of all projecting marine growth, either by hand or with mechanised tools. Where the pile is to be covered from below the mud line to above the highest anticipated tide level, modular sections are encircled around the pile with the reinforced edges of the sheets acting as stiffeners, thus providing means of manipulation. At the bottom section, a crater is formed in the mud by hand digging or jetting and the loosely rolled encasement is then slipped down into the excavation and final tightening made with a special socket wrench. The barriers are fastened into final position with Monel or nylon nails and the single vertical rolled sheet ensures a virtually seamless unit with no materials subject to sea water deterioration being exposed.

The general practice is to apply jackets only to those portions of the piles which are being actively attacked by borers. If later the attack is found to be progressive, additional modular coverage can be applied in an overlapping arrangement.

The modular design permits the installation of any length of barrier, whether at the tidal zone, near the mud line, at intermediate points, or over the full length of the pile exposed to borer activity. Where some mechanical damage is anticipated in the tidal zone such as might be caused by floating debris, heavier gauge armour sections are provided as resistance to this type of damage.

[illegible] order to determine the effectiveness of the stagnant environment, thin, bare and untreated wood strips can be inserted down inside the plastic envelope and removed at any later time for activity examinations and then replaced without disturbing the barrier in any way. Periodic examinations of commercial barriers have shown the stagnant envelope to be 100 per cent effective.

Ease of Installation

These modular barrier units are simple in design, lightweight and portable. The entire installation can be made to piles in place from a small work boat, without removing any part [illegible] ing the wharf i[illegible] needed where th[illegible] than 20-ft., or w[illegible] neath the mud l[illegible] appreciable eco[illegible] former procedure[illegible] installation on [illegible] superstructures, [illegible] areas, restaurants[illegible] ment zones and [illegible] where pile replac[illegible] pensive or impos[illegible]

Completed protection of wood piling.

PILE-GARD CAN ASSIST IN SUCCESSFULLY SOLVING THE MARINE BORER PROBLEM WITH THE FOLLOWING ADVANTAGES

- PILE-GARD can indefinitely preserve and protect in-place piling at costs of from 25% to 50% of new replacement piles without disturbing the structure in any way.
- Based on present test results and the continuing development of even more durable pliable films, it is estimated that PILE-GARD will preserve and protect wood piling for more than 20 years.
- The shop fabrication of the PILE-GARD units is extremely simple and rapid and does not require special or costly tools or equipment.
- PILE-GARD can be quickly installed at the tide line or beneath the surface of the water without the need for expensive tools or equipment.
- The modular PILE-GARD design permits the installation over any desired length. Additional sections can be applied above or below existing units for eventual continuous coverage.
- The modular PILE-GARD units are light and portable and can be relocated at any time . . . such as following a changing mud line.
- Installation of PILE-GARD can be made over depressed attack areas with adequate permanent positioning and support.
- Each modular PILE-GARD unit is permanently supported over a selected area without adhesives, mastics, cements, fillers or any fasteners directly through the encasing sheet.
- The pliable envelope of PILE-GARD fits any diameter and taper of pile and allows for uneven surfaces.
- In cases where heavy tide line damage is anticipated or actually encountered after standard PILE-GARDS are installed, special armor units can be installed at moderate cost and without disturbing the base units.
- In cases where the pier is altered or abandoned, all PILE-GARDS are 100% salvageable, without damage, for reuse elsewhere.
- The PILE-GARD design permits the insertion of bare wood test strips behind the wraps and into the attack zone which can be periodically removed to conclusively determine the effectiveness of the stagnant envelope.
- Each modular PILE-GARD unit can be quickly removed periodically and without damage for surface inspection of the pile and then be easily replaced.
- The essentially seamless PILE-GARD envelope provides a reservoir into which chemicals can be introduced and retained . . . if such a measure is ever found necessary. To date the stagnant envelope has proven 100% lethal to all marine borer life.
- The design of PILE-GARD permits the use of a wide range of satisfactory pliable materials which are now available and which are continuously under development by a number of very interested major manufacturers.

PILE-GARD is made available exclusively by MARINE BARRIERS, INC. For qualified engineering analysis of your marine borer problems, recommendations, designs, specifications and consultation write or phone:

MARINE BARRIERS, INC.

Orval E. Liddell, President

Post Office Box 1533
330 Descanso Avenue

Phone: Avalon 287
Avalon, California

PILE-GARD®

PRESERVATION OF IN-PLACE PILING

DISTRIBUTED BY OSMOSE WOOD PRESERVING CO.
980 ELLICOTT STREET
BUFFALO 9, NEW YORK

MARINE BARRIERS, INC.

ENGINEERS — CONTRACTORS

AVALON – CALIFORNIA

® **Copyright 1961 by Marine Barriers, Inc.**

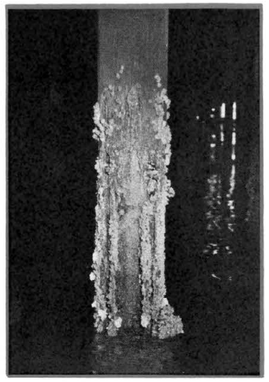

THE PROBLEM

THE ANSWER

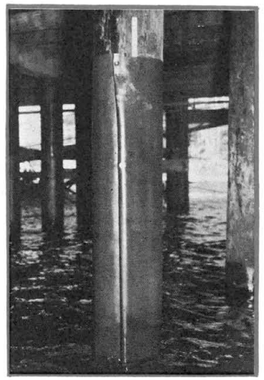

A BREAKTHROUGH FOR THE PROTECTION AND PRESERVATION OF IN-PLACE WOOD PILING

PILE-GARD* now provides the answer to the problem of economically extending indefinitely the service life of wood piling where the marine borer attack has penetrated the creosote protection and rapid destruction of the structure is under way. The present practice is to determine the piles where the marine borers have entered the heartwood, stand helplessly by, watch the pile proceed rapidly on its way to destruction and then schedule the costly replacement in time to preserve the integrity of the pier structure.

PILE-GARD is an extremely simple and effective means for the control of marine borers and can be installed under average conditions for from 25% to 50% of the cost for new replacement piling at any time it is decided that the pile is to be preserved against further borer damage. The service life of available plastics is indefinite as, to date, specification materials have been found 100% after more than 10 years of submergence in sea water.

PILE-GARD incorporates the principle of creating a stagnant water film around the marine borer infested areas of the pile to:

Exterminate all existing marine borer life within the stagnant envelope by restricting the oxygen and nourishment;

Protect the encased area of the pile against any new marine borer attack from the outside and preserve the pile in its present condition indefinitely.

PILE-GARD has its greatest advantage in the ability to be installed at any time from the water surface without any disturbance whatsoever to the deck structure or to normal activities associated therewith. Of particular value is the simple installations on in-place piling under extensive superstructures, warehouses, shops, restaurants, yacht clubs, resort facilities or any other buildings or equipment where pile requirements are extremely expensive or quite impossible to perform unless such structures are partially or completely removed. This non-interference with necessary pier operations results in savings which will greatly reduce the net cost of **PILE-GARD.**

PILE-GARD consists essentially of a single sheet of specification rubber, neoprene, flexible poly vinyl chloride or other long life, tough, abrasion and impact resistant, pliable material which is completely immune to service exposure. This single sheet is wrapped around the full circumference of the pile, usually in modular sections, and the single vertical seam is so formed as to make the entire encasement a practically seamless unit. No materials are exposed which are subject to sea water deterioration. The assemblies are light and portable and the entire installation can be made from a small work boat on the surface of the water without disturbing the existing structure in any way. The practical simplicity of the design makes it possible to install barriers over localized borer attack areas, whether they be at the water surface, near the mud line, at intermediate points or for the full length of the pile from below the mud line up to above the highest anticipated tide.

PILE-GARD is a commercially tested and proven process. The development of **PILE-GARD** has been in close cooperation with the Port of Los Angeles where over 5,000 lineal feet have been satisfactorily installed up to the present time. The demonstrated design, economy, practicability, long life and effectiveness of **PILE-GARD** have been reason for acceptance by the Port of Los Angeles for pile preservation and plans are now under way for the near future installation of 16,000 lineal feet more of this pliable barrier. **PILE-GARD** is normally specified over areas where the borer attack has been considered critical to the useful life and structural strength of the piles. All phases of designs, materials and methods of installation are under constant test and development and the results to date insure completely satisfactory performance.

In Avalon Bay, Santa Catalina Island, California, the original test barriers are 100% intact, serviceable and effective after over 3 years of service exposure. Over 5,000 lineal feet of commercial **PILE-GARD** are now installed on piling under the Steamer Pier to cover all areas where marine borer attack has reduced the effective strength by 15% or more. A program is under way to annually extend **PILE-GARD** protection to new 15% or more destroyed sections and this procedure will continue until all wood piling are completely encased and the entire pier structure preserved and protected indefinitely against any marine borer attack. This yearly installation of **PILE-GARD** permits maintenance expense to be economically spread over annual periods while at the same time the integrity of the structure is being very adequately preserved. This Steamer Pier now provides a test facility for designs of pliable barriers and is a current demonstration of the successful commercial use of **PILE-GARD.**

COMPLETED — OVER 100,000 LIN. FT. NOW IN SUCCESSFUL SERVICE

*U.S. AND FOREIGN PATENTS PENDING

PILE-GARD

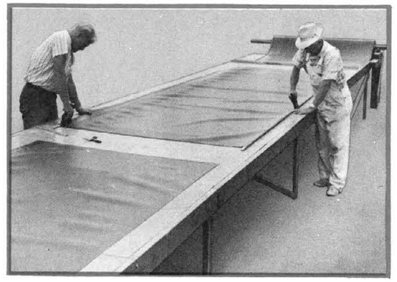

The simple shop or yard fabrication

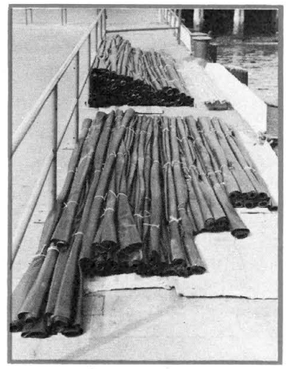

Pier site stockpile — 3,000 lineal feet.

PILE-GARD ready for installation.

PILE-GARD lowered into position.

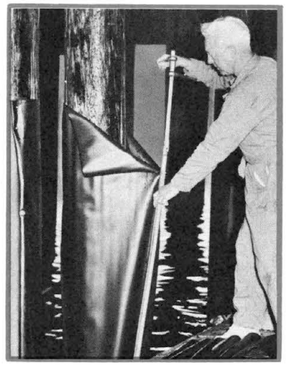

PILE-GARD encircling pile, ratchet in position ready for wrapping operation.

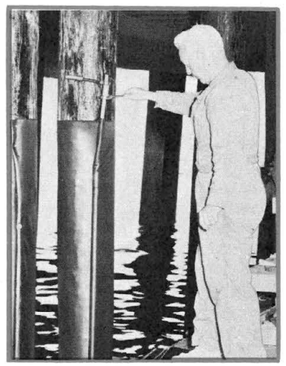

Wrapping completed — **PILE-GARD** in final position.

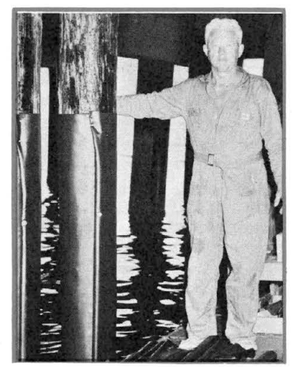

PILE-GARD fastened and sealed. Installation completed.

July 2, 1965

3505

Mr. M. H. Dick
Vice President and Editor
Railway Track and Structures
14 East Jackson Boulevard
Chicago, Illinois 60604

Dear Merwin,

We have your letter of the 29th of June concerning our use of materials purchased from Osmose Wood Preserving Company primarily for ground line treatment of untreated cedar piling. We started our program for ground line treatment of piling some ten years ago and to date have applied Osmose plastic to no fewer than 2,000 piles. We are entirely satisfied with the results, and recent inspection indicates that the applications of some eight or ten years ago have arrested further decay in these untreated cedar piling.

As far as an article is concerned, I would suggest that you work with the Osmose Wood Preserving Company and then when the article is prepared, send it to us for our approval and correction.

Most sincerely yours,

D. H. SHOEMAKER

Chief Engineer

WRB:bm

3505

NORTHERN PACIFIC RAILWAY COMPANY

ENGINEERING DEPARTMENT

ST. PAUL 1, MINN.

ZIP: 55101

J. P. TITUS
District Engineer,
Lines East of Livingston, Montana

OFFICE OF
CHIEF ENGINEER

JUL 6 1965

July 1, 1965

S-69-210

NORTHERN PACIFIC RY. CO.
ST. PAUL, MINN.

Mr. John W. Storer
Vice President
Osmose Wood Preserving Co. of America, Inc.
4939 Monona Drive
Madison, Wisconsin 53716

Dear Mr. Storer:

In reference to previous correspondence regarding the bridges on our Mandan North and South Lines which were cruised in company with you and your Mr. Paul Harris and our Messrs. Paul Warner and Bill Hegland on April 27 and 28 of this year.

I believe I previously furnished you with a copy of my May 5 report with attached memorandum concerning the detailed inspections on each bridge, but to bring you completely up to date I am going to furnish you with the following information:

1. A Xerox copy of my April 22, 1965 letter to Mr. Shoemaker.
2. A Xerox copy of my May 5, 1965 letter to Mr. Shoemaker.
3. A Xerox copy of the memorandum, including the detailed inspection information.
4. A Xerox copy of my June 21, 1965 letter to Mr. Shoemaker.
5. A Xerox copy of Mr. Shoemaker's June 25, 1965 reply.

You will note from the above that ample consideration has been given by all concerned to a possible program for retreating externally and pressure treating internally of all untreated piling, caps and stringers remaining on the Northern Pacific, and we have now made our decision against any such program.

As stated in Mr. Shoemaker's June 25 letter, we will consider each bridge individually on their own merit during our bridge inspection and include in the annual bridge maintenance program any bridges which would justify special treatment.

Very truly yours,

J. P. Titus

District Engineer

JPT:ds
encs.
cc: Mr. D. H. Shoemaker
Mr. M. O. Woxland
Mr. A. W. Hegland - enc.
Mr. E. A. Panushka - enc.

S-69-210

DHS/ MOW, AWH, EAP:

Mr. E. A. Panushka:

Please pay particular attention to the last two paragraphs of my May 5 letter to Mr. Shoemaker regarding the proposed work on Bridge 58 on the Mandan South Line to be done rather than the work now authorized under AFE 229-I-64 on Bridge No. 48-1. If at all possible, you should wait until after our bridge inspection in August before doing any work on either of these bridges so that we can again consider the advisability of doing the work on either or both bridges.

J. P. TITUS

JPT:ds

3505

Railway TRACK and STRUCTURES 22 WEST MADISON ST., CHICAGO 2, ILL. • RA 6-0794

June 29, 1965

NEW ADDRESS
14 East Jackson Boulevard
Chicago, Illinois 60604

Mr. W. R. Bjorklund
Assistant Chief Engineer
Northern Pacific Railway Co.
Northern Pacific Bldg.
St. Paul, Minn., 55101

Dear Mr. Bjorklund:

I understand from Jack Storer of Osmose Wood Preserving Company that an inspection was made recently on the Northern Pacific of some bridge piles that were treated at the ground line some ten years ago. Mr. Storer tells me further that the results were very interesting.

My purpose in writing to you is to request your permission for us to prepare an article giving the results of the inspection. Assuming that you have no objection to the article, the next question is how to obtain the necessary information for it. One way would be to work with Mr. Storer in obtaining this information. On the other hand, if a report has been prepared by your office giving the results of the inspection, we could prepare our article from that report assuming that you would be willing to furnish us with a copy.

Any article that we would write on this subject would be submitted to you for checking before being published.

There is also the question of illustrating the article. The best material for this purpose would be photographs of the treated piling taken at the time of the recent inspection. If such photographs are available, I am wondering if you could provide me with prints of a representative selection of them.

At your convenience, I would like very much to hear from you regarding whether we have your permission to prepare the article and then indicating how you would like for us to proceed in getting the necessary information. Your cooperation in helping us to develop this article will be very much appreciated.

Yours sincerely,

M. H. Dick

Vice President and Editor

MHD/p

3505
11585

St. Paul, Minnesota
June 25, 1965

3505

Mr. J. P. Titus:

We have yours of the 21st, your File S-69-210, concerning Osmoplastic treatment at ground line and internal pressure treatment with Osmose salts of pile bridges, particularly as they relate to the Fargo Division, Mandan North and South Lines.

At the time we instigated the program for ground line treatment, I believe the cost ran about $6 to $8 per pile, and the criteria we established was that untreated piling which were not over about 15 years old and still were sound should be given the ground line treatment in order to extend their service life, then estimated to be 17 years. In other words, we were setting up these bridges so that piling would not be redriven due to ground line decay. Some other source of decay such as at the bracing bolt holes and the contact between the pile and the cap would probably then create the condition which would cause eventual replacement. I question now whether some of these older piling which have been treated at ground line can be preserved throughout their length, and as you state, a general internal treatment would be required at a considerably higher cost than $6 to $8 per pile.

I would assume that even the ground line retreatment would probably cost us at least $10 per pile at this time, and we might still be faced with replacing the piling due to decay between the ground line and the cap. On that basis, I would be reluctant to approve any retreatment at the ground line and would feel that if the condition is as good as you state it is, the ground line can be assumed to carry through until some other cause of decay at a piling will require its eventual replacement in trtd. form.

The second broad category we covered was the preservation of bridges on branch lines not likely to survive for too many years. This was the situation on the Colstrip Line where we approved the spray treatment of a number of bridges when there was a question as to whether or not the Colstrip Branch would be continued in use. Apparently now we are assured that eventually there will be a unit train of the Montana Power Company utilizing this branch line so that the spray treatment of the bridges has solved our instant problem.

Recognizing that there may be certain bridges which would justify special treatment either at ground line or spray treatment or even internal treatment, it seems to me that these should be considered individually on their merits and included in the Form 134, which you will prepare for 1966.

D. H. SHOEMAKER

Chief Engineer

WRB:bm
cc: Mr. M. O. Woxland

3505

OFFICE OF
CHIEF ENGINEER

JUN 22 1965

NORTHERN PACIFIC RY. CO.
ST. PAUL, MINN.

St. Paul, Minnesota
June 21, 1965

S-69-210

Mr. D. H. Shoemaker:

Please refer to my May 5, 1965 letter to you, regarding the bridges on our Mandan North and South Lines which were selected for cruising with the Osmose Wood Preserving Company of America, Inc.

I am now attaching a Xerox copy of letter dated June 15, 1965, from Mr. John W. Storer, Vice President of Osmose Wood Preserving Company of America, Inc., and a Xerox copy of the test results for the quantitative analysis run on samples taken by increment borings of two of the untreated cedar piles during that inspection trip on Apr. 27 and 28. This is for your information and file and your possible use in advising me regarding a program for retreating these bridges by the Osmose people in accordance with the last paragraph of my letter.

J. P. Titus
District Engineer

JPT:cw
Enc.

cc: Mr. M. O. Woxland (1) Enc.

6/22

6/25

5-69-210

MANUFACTURERS OF OSMOSALTS : OSMOPLASTIC : PENTOX : COP-R-NAP : OZ

OSMOSE WOOD PRESERVING CO. of AMERICA, Inc.

980 ELLICOTT STREET, BUFFALO, NEW YORK 14209 — AREA CODE 716 882-5905

Reply to: RAILROAD DIVISION
4939 Monona Drive
Madison, Wis. 53716

June 15, 1965

Mr. Jack Titus, District Engineer
Northern Pacific Railway Company
St. Paul 1, Minnesota

Dear Jack:

Attached is the result of a quantitative analysis run on the untreated cedar piles inspected during our recent trip on the Mandan North and South Lines. You will note that Sodium Fluoride is present above threshold amounts in at least the outer inch of wood in the ground-line area. This after approximately nine years service. The laboratory results verify what we observed visually -- that no further deterioration has occurred due to the presence of toxic quantities of preservative.

The cross section of pile that we obtained for shipment to our laboratory has not yet been received in Buffalo, New York. Could you check and see if this was shipped as planned?

As agreed, I am holding the cruising reports obtained during our trip and would like to work up our specific recommendations and price proposals covering inspection and preservative treatment -- above ground. With this in mind, could you prepare a list of those bridges you are considering for in-place treatment? On receipt of this information, I can prepare firm price proposals for your consideration. We currently hold contracts for work on the Canadian Pacific in southern Saskatchewan and I would like to combine this work with yours on the Mandan Lines if at all possible. By doing so, we can make significant savings in crew movement and both our companies would benefit. We tentatively plan the Canadian Pacific work to begin during the month of August.

I look forward to hearing from you on this so we might prepare the necessary proposals for your consideration. Your continued interest is greatly appreciated and we look forward to being of service.

Very truly yours,

John W. Storer
Vice President

JWS:ef
Att.

OFFICE OF
DISTRICT ENGINEER
JUN 16 1965
NORTHERN PACIFIC RY. CO.
ST. PAUL, MINN.

from the

RESEARCH DIVISION

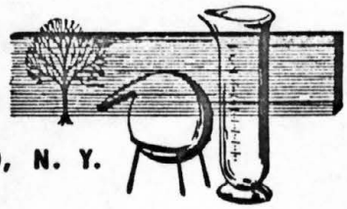

OSMOSE WOOD PRESERVING CO. OF AMERICA, INC. BUFFALO, N. Y.

subject: Northern Pacific Railroad
Analysis of Increment Borings
for Retention of Sodium Fluoride
from Groundline Treatment with
OSMOPLASTIC

date: May 7, 1965

Two sets of increment borings were received for analysis. These were taken from originally untreated western red cedar piling which had been treated with OSMOPLASTIC eight to nine years previously.

Bridge No.	Bent	Pile	Sodium Fluoride, lb./cu.ft. 1st 1/2"	2nd 1/2"
42	6	3	.17	.13
80	14	5	.63	.23

These analytical results show good penetration and retention of sodium fluoride in at least the outer inch of wood in the groundline area.

George B. Fahlstrom
Director

GBF:aew

3505

MANUFACTURERS OF OSMOSALTS : OSMOPLASTIC : PENTOX : COP-R-NAP : OZ

OSMOSE WOOD PRESERVING CO. of AMERICA, Inc.

980 ELLICOTT STREET, BUFFALO, NEW YORK 14209 — AREA CODE 716 882-5905

Reply to: RAILROAD DIVISION
4939 Monona Drive
Madison, Wis. 53716

May 3, 1965

Mr. W. R. Bjorklund, Assistant Chief Engineer
Northern Pacific Railway
St. Paul 1, Minnesota

Dear Walt:

As you know, I spent a few days this past week on the North and South Mandan Lines with Jack Titus. I'm sorry that you couldn't have been along to personally observe the excellent condition of piles treated with Osmoplastic 9 and 10 years ago. The results were quite impressive and one of the reasons for this is the excellent job of decay removal by your B&B forces at time of treatment. The Supervisor and Foreman in charge of this work certainly should be commended.

Since you have personally been interested in our service dating back to 1955, I knew you would be interested in the attached copy of a letter from the Rock Island to the Western Pacific answering their inquiry in regard to our work. I'm personally convinced that the Rock Island program will be equally as successful above ground -- as yours has been on the below ground portion.

As a result of last weeks trip in North Dakota, there is no question that above ground inspection and treatment is justified on the great majority of untreated bridges protected by Osmoplastic in your program starting in 1955. I know that Jack Titus plans to make some specific recommendations in this regard and we stand ready to submit proposals on any work designated.

Your continued interest is greatly appreciated.

Very truly yours,

John W. Storer
Vice President

JWS:ef

P.S. I had planned to attend the annual golf outing today but found it impossible to get away. I'll try to plan better next year since I do enjoy the outing very much. I presume you shot about a 75 as usual.

Enc.

In arriving at a decision, several other factors are weighed such as condition of stringers, caps and deck, possibility of filling, number of piling already posted, etc. Partly as a rule of thumb and partly because of lack of available funds for a large renewal program, we generally do not redrive the piling in the trestles unless the percentage of rejects exceeds 15 to 18%. I feel the ideal subject for treating is one that has 50 to 100% decay and 0 to 10% rejected piling. If no rejected piling are found in the inspection and the incidence of decay is low, say 20 to 30%, and only a few small voids are detected in the piling, it is generally better to defer treatment since without voids this treatment is not effective. Most of the piling which we are treating at present were driven between 1916 and 1922 and the majority of our treating to date has been concentrated in Arkansas and Louisiana where the annual decay period is the longest on our system. The cruising reports are of considerable help to us in laying out a good renewal program. The treating reports, which are very detailed, give us practically an X-Ray picture of the condition of the piling and we know quite accurately what we have.

One important fact which has become evident since the initiation of our program was that on most of our divisions we were not necessarily redriving our worst bridges. Our bridge inspectors and master carpenters have gained considerable knowledge in the last two years in good inspection practice by accompanying the Osmose people on their inspections.

Although we are satisfied that this treatment will extend the life of the piling, insufficient time has elapsed to draw a conclusion from our own work. The Gulf, Mobile and Ohio has one trestle which was treated about ten years ago and in discussing this treatment with Hans Bober, their Bridge Engineer, he indicated he was satisfied with the results. I understand that the piling in this bridge were rebored recently and that retreatment was not yet necessary. Mr. Bober has since treated several other structures and I suggest you contact him since sufficient time has elapsed on these for conclusions to be drawn.

Very truly yours,

[illegible]

Chief Engineer

cc - Mr. John W. Storer

CHICAGO, ROCK ISLAND AND PACIFIC RAILROAD COMPANY

W. B. T[illegible]CKMORTON,
CHIEF [illegible]INEER

H. G. DENNIS,
ENGINEER MAINTENANCE OF WAY

B. BRISTOW,
PRINCIPAL ASSISTANT ENGINEER

D. C. GERSTENBERGER,
GENERAL SUPERVISOR
WORK EQUIPMENT

J. R. WILLIAMS,
ENGINEER OF BRIDGES

R. D. IGOU,
ENGINEER CAPITAL EXPENDITURES

LASALLE STREET STATION
CHICAGO, ILL. 60605

April 19, 1965

File 210008

P. J. CALZA,
ASSISTANT ENGINEER MAINTENANCE
OF WAY-BRIDGES AND BUILDINGS

A. W. CHARVAT,
ENGINEER OF BUILDINGS

L. A. PALAGI,
ENGINEER-ARCHITECT

R. V. LOFTUS,
ENGINEER PUBLIC WORKS

G. W. BECKER,
SPECIAL ENGINEER - DRAINAGE

Mr. Frank R. Woolford
Chief Engineer
The Western Pacific Railroad Company
Western Pacific Building
526 Mission Street
San Francisco, California 94105

Dear Sir:

Reference is made to your letter April 7 concerning the Osmose in-place treatment of timber trestles.

We started a treating program in October 1963 for internal treatment of piling together with occasional external ground line treatment where warranted. To date we have treated the piling in 1,330 panels of trestle at an average cost of $7.89 per lineal foot of bridge. This cost varies from trestle to trestle with the number of piles in the bents, bent height, number of panels treated in any one contract, accessibility of the structures, amount of decay, etc.

Since the start of this program, we have worked with the Osmose people in adapting their techniques of inspection and treatment to our particular problems and have developed a system to coordinate the treating program with our trestle renewal program. The Osmose inspectors cruise our timber bridges by lines and furnish us with reports of these inspections which show the shell thickness, amount of void and location of all the inspection borings. The report also gives their inspector's estimate of percentage of decay and percentage of rejected piling that will have to be posted, also their recommendation to treat, renew or defer treatment if insufficient decay is present. Our Bridge Engineer reviews these reports and they are also reviewed by the Division Engineer and Master Carpenter. Decision is made to treat, rebuild or possibly defer treatment.

OFFICE OF
CHIEF ENGINEE

MAY 5 1965

NORTHERN PACIFIC RY. CO.
ST. PAUL, MINN.

3505

St. Paul, Minnesota
May 5, 1965

S-69-210

Mr. D. H. Shoemaker:

Please refer to previous correspondence regarding the bridges on our Mandan North and South Lines which were selected for cruising in company with the Osmose Wood Preserving Company of America, Inc. people on April 27 and 28.

I am now attaching a memorandum for file this date concerning the rather detailed inspections which were made on as many bridges as were accessible and possible in that two-day period.

The two main conclusions which can be obtained from this recent inspection are as follows:

> The ground line treatment on piling, external that is, has been 100% effective in this area with not one single increase in external decay noted on any piling so treated. This includes several piling which have been cut off and pegged, since the cutoff piling were still on the ground and inspected and found to be without any additional external decay.
>
> Some internal decay is occurring mostly at the ground line on piling which have been treated externally, which will eventually make the external ground line treatment ineffective. In the event that we consider retreating externally at the ground line, it will be necessary to also internally pressure treat the piling throughout their length.

You will note from the memorandum that Bridge No. 48.1 on the Mandan South Line is authorized for redriving bents 1 through 6 under AFE 229-I-64 in the amount of $11,950, which is also a carry-over item on the Form 134 for 1964 work. It is evident from our inspection last week that the rebuilding of this portion of the bridge could now be deferred for several years. The stringers in this bridge were placed in 1937 and 1940, and bents 1 through 6 were driven in 1940, all utilizing untreating material. The bents were ground-line treated with Osmose in 1956, and no additional external decay was detected this last inspection, and only very little internal decay.

Contrary to the above, Bridge No. 58 was found to have considerable internal decay in the piling, and in addition, an excessive number of piling have already been pegged. Once again, this concern is only for a portion of the bridge; namely, bents 1 through 8. Bents 1 through 5 were redriven

untreated in 1949; bents 6 through 8 were driven untreated in 1933; and bents 9 through 13 were driven with treated material in 1949. The stringers were placed in 1933, at which time the bridge was completely renewed. It is now proposed that we redrive bents 1 through 8 in this bridge and renew the stringers in seven spans, all to be done as a substitute for the work authorized under AFE 229-I-64 in the amount of $11,950. That AFE included only 6 bents, but it also included renewing ties and guard timbers. The Form 134 for 1965 includes an item for Bridge 58 to renew all ties in the amount of $2,050. It is estimated that the work on Bridge 58 be done for the total of $14,000 authorized under AFE 229-I-64 for Bridge 48.1 and the 1965 Form 134 item for Bridge 58.

I feel compelled to conclude once again that the exterior ground line treatment utilizing Osmose treating compound has been 100% effective, and that no additional exterior decay has been detected. Upon removing the protective paper, the wood piling were exactly in the same condition as when treated, usually in 1955 to 1957. Even the cutoff piling, which we located on the ground and which have previously been treated, were still in the same condition as they were when treated. We returned one pile cutoff to Fargo, and the B&B Supervisor is now endeavoring to slice small enough samples for sending to this office and also to the Osmose people for testing of the amount of retention of treating material.

I would now recommend that we make up a program for retreating externally at the ground line of all untreated piling which have previously been treated eight or more years ago, while at the same time internally pressure treating all piling to retard or stop any center rot. We also should program the detailed inspection and possible internal treatment of stringers on these bridges. I feel certain that we could add a minimum of 10 years of life and very possibly 20 years of additional service life. It is necessary at the time the work is being done to make the decision on whether or not to remove portions of decayed piling requiring replacement account internal rot, and I would recommend that a bridge be redriven if more than 5 or 6% of posting or pegging of piles is found necessary during the detailed inspections, presumably to be made by the Osmose people, using men skilled in the use of climbers to inspect all portions of the piling and the caps.

J. P. Titus
District Engineer

JPT:bm
Enc. 1
cc: Mr. M. O. Woxland - Enc.

5-69-210

Memo:

The following is a list of the findings resulting from increment borings and soundings made on various bridges on the Mandan North and Mandan South Lines of the Fargo Division in company with Messrs J. W. Storer and Paul Harris of Osmose Wood Preserving Co and Messrs P. W. Warner, A. W. Hegland and J. P. Titus of the Northern Pacific Ry Co. on April 27 & 28, 1965.

Mandan North (4/27/65)

Brdg. 27 Osmose '55

B1 - OK; B2 - P1 replaced, OK; B3 - OK
B4 - OK; B5 Bored P3 at top - OK, Bored P4 at cap & found 3" shell, ½" soft & solid center.
B6 - Bored P3 at cap - OK P1 has been replaced.
B7 - " P1 at cap & found 4½" shell, 2½ void at center.
B9 - Bored P4 - OK. Bent has 2 pegged piles
B10 - Bored P2, P4 & P5 at grd. - OK
B11 - Bored P1, P3 & P5 at grd - OK (Some soft wood)
All ground line external treatment is OK.

Brdg 33 Osmose '56

B1 - Bored P1 at grd - OK
" - " P3 at top - OK
B2 - P2 has been pegged - OK
" - Bored P3 at top - OK
" - " P5 at grd - OK
B3 - " P1 at grd. - OK
" - " P4 at grd. - OK
All ground line external treatment is OK.

Mandan North (4/27/65)

Brdg. 37 Osmose '56 on Bents 1, 2, 5 & 6

B1 has been framed

B2 - Bored P2 at grd - 3" shell, 1/2 void, 1 1/2" shell, 1" soft.

B2 - Bored P3 at grd. - 5" shell, 3/4" void

B2 - Bored P3 at top - OK; P5 has been pegged.

B3 - Not Osmosed. Bored P5 at top - OK, at 5' down from top found small amount center rot, just starting.

B3 - Bored P2 at 2' up from water line - OK but very wet.

B3 - Bored P2 at top - OK.

B4 - Not treated - OK

B5 - Bored P5 at grd - Some decay adjacent large check, but all solid at center.

B5 - Bored P3 at top - OK

B6 - Bored P3 & P5 at grd - OK

Obtained cut off pile from this bridge which showed no loss of wood since ground line external treatment.

All ground line external treatment remaining is OK,

Brdg. A6 - Osmose '55 - Bents 1, 2, 5, 6 & 7; '56 - Bents 3 & 4

B1 - Bored P2 at grd - OK

B2 - " P3 " " - OK

B3 & B4 - Standing water

B5 Bored P2 at 4' from top - 3 1/2" shell, 1" void, solid center.

" " P2 at top - OK; P3 at top - OK

" " P3 at 3' from top - OK

" " P5 at 4' " " - OK

B6 " P1 at grd. - 2" shell, 2" void, solid center. {Possible reject.

B7 " P2 at grd - OK

All ground line external treatment is OK.

Mandan North (4/27/65)

Brdg. 51 - Osmose '57 Bents 1, 2, 5, 6 & 7 (Highway U.G.X.)
B1 - Bored P2 & P5 at grd. - OK
B2 - " P1 & P2 at grd. and P3 at top - OK
B5 - " P3 at 5' up from grd and P4 at grd. - OK
B6 - " P1 at grd., P4 at 1' down from top & P5 at 3' up at bolt hole - OK
B7 - " P2 at grd - OK
All ground line external treatment is OK.

Brdg. 80 - Osmose '57 - 8 approach bents only.
B8B - Bored P1 at grd. - Basically solid but very wet and also 2 thin rings of decay started.
B9A - Bored at 3' up from grd - 2" shell, 3" void, solid center (The void was started at old bolt hole)
B9A - Bored P1 at 3' up from grd - OK
B9A - " P2 at 2' " " " - 6" shell, ½" soft at center.
" - " P2 at 1' " " " - 3½" " , 1½" " " "
" - " P2 at grd. - 3½" shell, 1½" soft.
" - " P4 at grd - OK
B10 - " P3 at 3' up and P4 at grd - O.K.
B11 - " P4 at grd. - O.K.
B12 - " P1 " " - OK (P5 has been redriven)
B13 - All OK
B14 - Bored P5 at grd - OK (Retention samples obtained)
B15 - " P5 " " - OK
All ground line external treatment is OK.

Mandan South (4/28/65)

Brdg. 41.2 - Osmosed '58 Bents 1, 2, 5 & 6.
B1 - Bored P2 at grd - 5½" shell, ½" soft center.
B1 - " P5 at grd - 4" shell, 4" void at " .
B1 - P3 & P4 are framed, untreated.
B2 - Bored P1 & P2 at 1½' up, P3 at grd & 3' up, P4 at 2' up - OK
B4 - " P3 at top - OK (Not treated at grd.)
B5 - " P4 & P5 at grd - OK
B6 - " P3 & P5 at grd. - OK (P1 has been pegged)
All ground line external treatment is OK.

Brdg. 42 - Osmosed '56 Bents 1, 2, 6 & 7
B1 - Bored P1 at grd. - 1½" shell, 1¾" void, solid center
B1 - " P1 at grd. at 45° angle from above - OK
B2 - " P1 & P2 at grd. & P3 at Top - OK (Center just starting)
B1 - " P3 at grd. - OK
B2 - " P5 at grd. - 2½" shell, 2" soft center.
B6 - " P3 at grd - OK (Retention samples taken)
B7 - " P2 " " - OK
B7 - " P4 " " - 4" shell, 3½" void
All ground line external treatment is O.K.

Brdg. 48-1 - Osmosed '56 Bents 1-6 (Redrive Bent 1-6, AFE229-I-64)
B1 - Bored P3 at grd. - 5½" shell, ¾" void
B1 - " P1 & P5 at grd & P3 at 1' up - OK
B2 - " P1 & P4 at grd - OK
B2 - " P2 at grd at 3 diff. directions - 2½ min. & 3½" max. shell and 4" max. void at center
B3 - Bored P1 at top and P1 & P4 at grd - OK
B3 - " P3 at grd. - 3¼" shell, 1" void
B4 - " P2 at top & P4 & P5 at grd - OK
B4 - " P1 at grd. - 3¾" shell, 1¼" void. (P3 is pegged)
B5 - " P1, P2 & P5 at grd & P5 at top - OK (P3 & P4 are pegged)
B6 - " P2 & P4 at grd - OK (Very wet & center rot starting) P1 is pegged.
All ground line external treatment is OK.

N.P. 1318
8-52

Mandan South (4/28/65

Brdg. 58 - Osmosed '56 Bents 1 thru 6 & 8

Note: P5, B2; P1, P2, P3 & P5 of B4; P1 B5 have been pegged.

B1 - Bored P4 at grd. - OK
B2 - " P1 at top & P3 & P4 at grd - OK
B3 - " P1 at grd - OK (Large cavity had been well treated)
B3 - " P4 at grd - 3½" shell, center rot (Solid wood at 1½' up.)
B3 - " P4 at 10' down from top - OK
B4 - " P4 at grd & 10' down from top - OK (P1, P2, P3 & P5 are pegged)
B5 - " P2 at grd. - OK (P1 is pegged)
B5 - " P3 at " - 4" shell, soft center
B6 - " P4 at top - OK
B6 - " P5 at grd - OK (Very wet)
B8 - " P1 at grd - OK (" ")
B8 - " P2 " " - OK (" ")
B8 - " P3 " " - 4" shell, soft center (very wet)

All ground line external treatment is OK.
New caps have been placed on Bents 1 thru 5.
Recommend redriving Bents 1-8.

Office Dist. Engr.
St. Paul, Minn.
May 5, 1965

3505

OFFICE OF
CHIEF ENGINEER

APR 19 1965

NORTHERN PACIFIC RY. CO.
ST. PAUL, MINN.

Seattle, Washington
April 13, 1965

Tac. 12th Sub - Brg. 27.2

Mr. M. O. Woxland:

With reference to your letter of November 4, 1964 to Mr. Shoemaker and Mr. Shoemaker's letter of November 9, 1964 to Mr. Brohaugh, pertaining to replacement of four or five pentachlorophenol-treated posts in Bridge 27.2, Tacoma 12th Sub:

Mr. Kick, Mr. Wiemer and I went through the drilling records attached to my letter of October 13, 1964 and concluded that the ground deck of bent No. 9 was as representative as any and that it would be practically as economical to change all eight posts account sways also had to be changed.

Therefore, during the week of March 29, 1964 all eight posts were changed.

On Wednesday, April 7, 1965, Mr. John Hampton, who had requested to be present, Mr. Kick, two B&B carpenters and I took samples of the base of these posts. Sample cuttings were taken as close as possible to include a cross section of the area into which the borings penetrated.

Mr. Hampton took samples of the posts as did I, also pictures which are attached were taken of these samples. My samples are three pieces. One is of post No. 7, bent No. 9, cut off 3" up from the bottom of the post. See picture I. There are two rot pockets about 2" x 2" around spike holes at top of picture. At the other three edges there is soft wood as close as one inch at places. There are at least four locations of punky wood and rot with two approximate areas 4" x 2" and one of 1" x 3", with sound wood at the center. Drilling records showed a 2" shell.

The other two samples are from post No. 4, cut off at 3" up from bottom and 7" up from bottom. At 3" up from the bottom the rot and punky area is evident approximately 11" x 4" on one side and 4" x 6" on adjacent corner. Drilling records show 2" shell to soft heart. See pictures II and III.

Samples coming under separate cover.

Mr. Hampton took samples and sent to his Buffalo office for lab tests. Pictures IV through VIII are his samples.

Picture No. IV is of post No. 1. Osmose originally numbered the posts backwards and the following are theirs and ours compared. All post numbers in this report are our numbering.

OFFICE OF
BRIDGE ENGINEER

APR 19 1965

NORTHERN PACIFIC RY. CO.
ST. PAUL, MINN.

	N. P. Number	Osmose Number
Post	1	8
"	2	7
"	3	6
"	4	5
"	5	4
"	6	3
"	7	2
"	8	1

Picture IV shows a 6" block cut off bottom of post No. 1 and then cut into two pieces 2" up from the bottom with corresponding sides adjacent each other. Note large area of rot and punky wood with only about 1¼" shell. Picture V is the area at 6" above bottom and is the other end of block on left in picture III. Drilling records show 1½" shell.

Picture VI is a picture of the bottom of post No. 2 before it was cut off 3" up from bottom and at 6" up from bottom of post. Note decay pocket on top in pictures VII and VIII. In picture VII you can see the shell which actually is a little over 1". The slight discoloration below rot is moisture and soft wood and is what I called punky material in the drilling records. In picture VIII you can see the evidence of the rot pocket at top of block and some of the punky area showing beneath. Picture IX is the end of post No. 5 and the discoloration is from the spikes used to nail it to the cap. Wood is still O.K., except the small dark areas at spikes.

From the evidence of the pictures, it proves to me that borings should be made from at least three sides of a post or pile to get a true picture. Picture VII shows sound wood about 4" wide and about 6" long in the middle right of area of the cut. While this would not necessarily eliminate this post from the critical list, the drilling records did show the post to have 1½" shell.

Regardless, I believe that the borings obtained previously are fairly indicative of the actual conditions found and justify our removal of the posts from a safety standpoint. I also believe that the Osmose treatment has effectively stopped the progression of decay in these timbers.

Osmose claims that tests show that decay will cease if Penta retention is at least 0.05 lbs. per cubic foot for timber above ground and 0.15 lbs. per cubic foot below ground.

The condition of the other posts, based on October 7, 1964 drilling records, in all the bents, assuming anything with less than a 3" shell should be replaced, is as follows:

			should be replaced	
Bent No. 7	Top Deck	1	"	3 O.K.
	2nd DEck	4	"	2 O.K.
	Ground Deck	5	"	3 O.K.
Bent No. 8	Top Deck	3	"	1 O.K.
	2nd Deck	4	"	2 O.K.
	Ground Deck	3	"	5 O.K.
Bent No. 9	Top Deck	3	"	1 O.K.
	2nd Deck	1	"	5 O.K.
	Ground Deck			8 O.K. 1965
Bent No. 10	Top Deck	3	"	1 O.K.
	2nd Deck	2	"	4 O.K.
	Ground Deck	2	"	6 O.K.
Bent No. 11	Top Deck	2	"	2 O.K. treated
	2nd Deck			6 O.K. treated
	Ground Deck	2	"	6 O.K.
Bent No. 12	Top Deck	1	"	3 O.K.
	2nd Deck			6 O.K. treated
	Ground Deck	4	"	4 O.K.

From the above, I would recommend that the second and ground decks of bent No. 7, top; and second deck of bent No. 8; top deck bent No. 9; top deck bent No. 10 and 11; and ground deck of bent No. 12 should be changed out now. This makes eight decks out of a possible 15 decks to change out, which is over 50%. Of the remaining seven decks, 12 posts have less than 3" shell, 24 posts have 3" shell or over, and eight posts are listed as O.K. Three decks are completely treated.

For expediency, the third deck in bents 7 and 8 could also be changed while working at bents 7 and 8. This would make the ratio 10 to 5.

Just when and if crushing will start and how rapidly it will progress and how it will occur in the posts is all conjecture. How the bad posts, if they start to crush, would affect the other posts with a 3" or more shell in the bents not mentioned to be changed is a big question. It, therefore, seems to become a matter of judgment as to how much we should change out immediately.

Mr. Brohaugh and Mr. Wiemer are receiving copies of this letter, and their reaction to the above recommendations is requested to be transmitted to you direct.

L. L. George
Assistant Bridge Engineer

LLG:dj
Att. (1 set pictures)

cc: D. H. Shoemaker
J. E. Hoving (1 set pictures)
R. G. Brohaugh
N. M. Lorentzsen
I. W. Brewer
H. C. Wiemer (1 set pictures)

Replace sheet 3 forthcoming

3505

Seattle, Washington
April 26, 1965

15-3

Mr. I. W. Brewer:

Referring to Mr. Brohaugh's letter of April 22, regarding 1965 Form 134 for renewal of untreated timber with treated timber, bents 7 through 12 on Bridge 27.2 on the Snoqualmie Branch.

In view of Mr. Brohaugh's comments the necessary material should be ordered and the work progressed without undue delay.

N. M. Lorentzsen

cc Mr. D. H. Shoemaker
Mr. J. E. Hoving

3505

Seattle, Washington
April 26, 1965

15-3

Mr. I. W. Brewer:

Referring to Mr. Brohaugh's letter of April 22, regarding 1965 Form 134 for renewal of untreated timber with treated timber, bents 7 through 12 on Bridge 27.2 on the Snoqualmie Branch.

In view of Mr. Brohaugh's comments the necessary material should be ordered and the work progressed without undue delay.

N. M. Lorentzsen

cc Mr. D. H. Shoemaker
Mr. J. E. Hoving

3505

OFFICE OF
CHIEF ENGINEER

APR 26 1965

NORTHERN PACIFIC RY. CO
ST. PAUL, MINN.

Seattle, Washington
April 22, 1965

Tac. 12th Sub - Brg. 27.2

Mr. I. W. Brewer:

With reference to the 1965 Form 134 item for renewal of untreated timber with treated timber, bents 7 through 12 on Bridge 27.2 on the Snoqualmie Branch:

I believe everybody has reviewed the reports of sampling of Osmose treated posts removed from the bridge and to my knowledge all are unanimous in the belief that the form item should be accomplished as set forth in the current Form 134.

Personally my feeling is that in a three-storey trestle such as exists here, the existence of ingrain rot, even in the absence of crushing, presents hazard. It is a peculiar circumstance existent on all high, frame timber trestles that the bents go out of plumb in an uphill direction. Although the bents in Bridge 27.2 are plumb at this time, this out-of-plumb possibility accents the danger, since a small amount of rot at the caps and intermediate caps loosens connections and reduces effectiveness of spiking.

In my mind, there is no question that work should be accomplished in accordance with the item on the form to renew all untreated timber in these six bents to provide a safe structure. It is presumed that you will instruct Mr. Wiemer to proceed on this basis.

R. G. BROHAUGH

RGB/rt

District Engineer

cc: Messrs. D. H. Shoemaker
N. M. Lorentzsen
J. E. Heving
H. C. Wiemer
M. O. Woxland

3505

OFFICE OF
CHIEF ENGINEER

APR 23 1965

NORTHERN PACIFIC RY. CO.
ST. PAUL, MINN.

St. Paul, Minnesota
April 22, 1965

S-69-210

Mr. D. H. Shoemaker:

In response to your letter of this date and in compliance with our discussion in your office, the following are my present thoughts on the economics of utilizing Osmose Wood preservatives on our existing untreated bridges.

Referring to my October 2, 1964 letter to you regarding an inspection made in company with Messrs. Bartley and Wilkins, at which time we made increment borings of the bridges on the Colstrip Line and also the B&CM Branch of the Yellowstone Division, which had been sprayed with Osmose treatment in the year 1960, I summarized the report by stating that it was quite evident that the spray treatment with Osmose had been of some benefit, although it was still too early to know if any of these bridges would obtain the ten years of additional life desired.

On the Colstrip Branch we inspected Bridge 2 where the stringers only had been treated, and found them to be sound. At Bridge 3, where the stringers only were treated, they were also found to be sound. The stringers on this bridge had been called for replacement on the 1964 Bridge Inspection, due to their general rough appearance and also to program same with other necessary work on this branch. Since the stringers were found to be in such a sound condition, similar to other timber on the branch, it was agreed by all that none of the work would be necessary for at least several more years.

At Bridge 6 on the same subdivision, the stringers only had been treated and they were also found to be sound on this inspection. These stringers had also been called on the 1964 Bridge Inspection. At Bridge 6.1, the stringers, caps, piling and bracing on the bridge had all been treated in 1960. The stringers, caps and bracing were found to be sound on the last inspection and the piling were found to have some center rot to a considerable extent. However, a minimum of 4 inches of sound shell was found on all piles bored and the redriving of this bridge was therefore not considered necessary for several more years.

At Bridge 13, the stringers, caps, piling and bracing had been treated in 1960, but the bridge had been rebuilt under AFE 177-K-63 as a treated timber bridge.

At Bridge 14, the stringers, caps, piling and bracing were treated in 1960, and again the bridge was rebuilt under AFE 177-A-63 with treated timber except that the stringers were reused. These stringers were bored on the October, 1964 inspection and found to be sound.

Bridge 25.1 had only the stringers spray treated in 1960, and these stringers were found to be sound on the recent inspection. Bridge 25A had been spray treated in 1960, including stringers, caps, piling and bracing, but the bridge was completely rebuilt under AFE 230-L-64 using treated material.

The timber on Bridges 7 and 10 on the B&CM Branch, which had been treated in 1960, were found to be sound on the recent inspection, and no replacement will be necessary for several years at least.

All of the above information obtained from that inspection trip was an indication to me that we were obtaining some benefit from the Osmose treatment, and it led me to an inspection of Bridge 27 on the Red River Branch of the St. Paul Division. During inspection last Fall at that location, it was decided to rebuild the bridge completely reusing the existing treated ties and guard timber.

The stringers at this bridge had been under question for some time, although they are not extremely old, having been placed in 1946. Helper stringers had been placed the entire length of the bridge on both sides of the bridge, which work was done in 1961. The guard timber and ties had been replaced in Spans 1 through 6 in 1956 and on Spans 12 through 16 in 1958, and on Spans 7 through 11 in 1959, all being treated timber.

As stated in my November 4 letter to you, we used increment borings on the inspection made on October 29 in company with Messrs. John W. Storer and Clyde Cundy of the Osmose Wood Preserving Company and Division Engineer Pechmann and myself. Other than small pockets of soft wood and a very few piling with a small amount of center rot, we found all of the piling in the bridge to have an adequate amount of sound wood. I further stated that it is very evident that the bents which were treated at ground line with the Osmose treatment have not lost any wood since 1955, and all of the wood which was originally exposed and treated is now clean, hard, and sound wood.

It was found, however, that the outside layer of soft wood above the ground line was approximately 1" thick for the most part, but the wood interior of the piling was found to be a sound wood. This portion of the piling was not treated since only the ground line portion of the piling had been treated in 1955.

We have since decided to include the rebuilding of this bridge on the 1965 Form 134 work, the decision having been based on the fact that the bridge is located on a very important branch line carrying heavy traffic and also since the condition of the stringers has been under question since as early as 1960. The height of the stringers above the ground, as well as the placement of the treated helper stringers on both sides of the original bridge stringers has precluded the possibility of adequate visual inspection without benefit of a boring program which is quite costly in itself.

From this most recent experience in actually inspecting bridge timbers more thoroughly than is possible during annual bridge inspection, I have had my opinion somewhat reversed regarding the effectiveness and the benefit derived from the utilization of the Osmose treatments. At any rate, I have felt it quite worthwhile to go into the matter a little more, at least on a personal basis. The coming scheduled meeting next week with the Osmose people has resulted from a letter dated February 3 addressed to Mr. Bjorklund and noted to me. Under date of March 11, I furnished a list of the bridges which have been treated with Osmose on the four divisions of the Eastern District, on which I indicated the date of treatment as well as the structural members which were treated. We also brought up to date the list indicating in the "Remarks" column the present status of these bridges, particularly mentioning those bridges which had been rebuilt or redriven.

The most favorable location for cruising of a single group of bridges to ascertain their present condition, which was as suggested in the letter from the Osmose people dated February 3, is the Mandan North and South Lines. This resulted in nearly 30 bridges to look at from one general location, including almost all phases of the treatment of timbers treated in 1955, 1956 and 1957. I am hopeful that the coming inspection will shed enough light on the matter to clarify my opinion one way or the other.

J. P. Titus
District Engineer

JPT:ds

cc: Mr. M. O. Woxland

St. Paul, April 22, 1965

3505

Mr. J. P. Titus:

In reference to several reports I have seen recently regarding tests that we have made of Osmose wood preservation system.

Before we spend a lot more time on this subject, I am going to have to be convinced it is in our best interests. I may be mistaken, but it seems to me that we are all so busy that we can't afford to spend the time on this subject.

D. H. SHOEMAKER

DHS/jwm

cc: Mr. W. R. Bjorklund

Mr. M. O. Woxland

3505

OFFICE OF
CHIEF ENGINEER

APR 21 1965

NORTHERN PACIFIC RY. CO
ST. PAUL, MINN.

St. Paul, Minnesota
April 20, 1965

1826

Mr. L. L. George:

I have received the three samples of timber post cutoffs referred to in your letter of April 13, about Osmose treatment at Bridge 27.2, Tacoma 12th Subdivision.

I do not believe the amount of decay present in the three samples to be particularly alarming for the loading conditions allowed at Bridge 27.2 provided that the extent of the decay does not progress beyond that now present.

I cannot reconcile your statement that various posts must be replaced from a safety standpoint with your other statement that the Osmose treatment has stopped the progression of decay.

In my letter of November 4, 1964, I compared your 1964 borings with those made in 1961, and concluded that the timbers were about the same, or maybe only slightly worse off in 1964 than in 1961. The timber samples, in my opinion, corroborate this conclusion. (I presume the post you refer to as No. 7 in your letter coincides with No. 8 in your 1964 report and No. 4 in your 1961 report.)

If the posts suggested for replacement by you are now replaced, I believe we must conclude that the Osmose treatment has not given an economical way to extend the life of the type of timber trestle represented by Bridge 27.2.

I have no objection to replacing the posts, since a somewhat unproved method must be relied upon to adequately prevent progress of decay in those timber posts, and to continue the posts in service under such conditions would require more frequent and more detailed inspections than may be possible with available forces, but do wish to reiterate that Osmose treatment for this type of bridge, which has been maintained in piecemeal fashion, is not economical.

M. O. WOXLAND

Bridge Engineer

MOW:cw

cc: Mr. D. H. Shoemaker
Mr. R. G. Brohaugh
Mr. J. E. Hoving
Mr. H. C. Wiemer

3505

OFFICE OF
CHIEF ENGINEER
APR 20 1965
NORTHERN PACIFIC RY. CO.
ST. PAUL, MINN.

St. Paul, Minnesota
April 19, 1965

S-69-210

Mr. D. H. Shoemaker:

I have now received reply from my March 22, 1965 letter to Mr. John W. Storer, Vice President, Osmose Wood Preserving Co. of America, Inc., regarding the list of bridges on our Mandan North and South Lines which were selected for cruising or inspection by the Osmose people in company with myself, Division Engineer Hegland, and, if possible, B&B Supervisor Panushka. All of these bridges have previously been given ground line protection with Osmoplastic preservatives.

We had made a complete listing of the structures so treated on all of the four divisions on the East End, and had decided that an initial effort should be made on the Mandan North and South Lines, since they were the most favorable for cruising because of the concentration of bridges in that particular area. There are nearly 30 bridges to look at in the one general location, and we should be able to accomplish this work in two or three days time, since Mr. Storer will have a battery-powered drill on hand and possibly Mr. Panushka can also arrange for such a drill.

The inspection is now set up for Tuesday and Wednesday, April 27 and 28, and Mr. Storer will be available to stay over Thursday, if necessary. I personally am now scheduled to attend the 1965 Lignite Symposium at Bismarck on April 29 and 30.

J. P. Titus
District Engineer

JPT:ic

cc: Mr. D. A. Thomson
Mr. R. K. Mossman
Mr. E. A. Panushka
Mr. M. O. Woxland
Mr. A. W. Hegland

3505

OFFICE OF
CHIEF ENGINEER

MAR 22 1965

NORTHERN PACIFIC RY. CO.
ST. PAUL, MINN.

Zip: 55101

March 22, 1965

S-69-210

Mr. John W. Storer, Vice President
Osmose Wood Preserving Co. of America, Inc.
4939 Monona Drive
Madison, Wisconsin 53716

Dear Jack:

In response to your March 16, 1965 letter, I am attaching a Xerox copy of a list of the bridges on our Mandan North and South Lines, indicating the bridges concerned, their total length, maximum height of bents, and approximate location, for your use in making arrangements for possible cruising of these bridges during the latter part of April.

I am also attaching for your information and possible use a part print of the 1965 Official Highway Map of North Dakota and that area on which I have shown in "green" the Mandan North and South Lines. I have also indicated by circling in "black" ink the mile post location of the various towns shown. You will note that I have further shown the Mandan South Line relocation which is now just being started by indicating a dashed "green" line from Mandan to Flasher, North Dakota. This particular line change will eliminate all of the bridges between MP 5 near Mandan and Cannon Ball and also between Cannon Ball and Flasher.

There are several towns which are quite acceptable for lodging, including Mandan, Beulah, Dickinson, and Mott.

Yours very truly,

J. P. TITUS

District Engineer

JPT:bm

Enc.

cc: Mr. D. H. Shoemaker - enc.

MANUFACTURERS OF OSMOSALTS : OSMOPLASTIC : PENTOX : COP-R-NAP : OZ

OSMOSE WOOD PRESERVING CO. of AMERICA, Inc.

980 ELLICOTT STREET, BUFFALO, NEW YORK 14209 — AREA CODE 716 882-5905

Reply to: RAILROAD DIVISION
4939 Monona Drive
Madison, Wis. 53716

D.J.T. Please see my letter to D.H.L re this matter. Then furnish the requested info on Mandan North & South lines so I can reply to the D.H.L. 3/17

March 16, 1965

Mr. Jack Titus, District Engineer
Northern Pacific Railway Company
St. Paul, Minnesota 55101

Dear Jack:

I have Mr. Bjorklund's letter of March 12 suggesting the Mandan North and South Lines for cruising of timber trestles. Since we will want to evaluate the condition of piles at and below ground line, it will be necessary to wait until the frost is out of the ground. This being the case, I presume that we could shoot for a date sometime during the latter part of April. Does this sound about right?

Prior to selecting a date for this work, it would be very helpful to receive a list of the proposed bridges showing the total length of timber, average height and approximate location. With this information, I can then estimate the amount of time required and the number of men we should line up for this cruising. I'll be looking forward to receiving this information at your convenience.

Very truly yours,

John W. Storer
Vice President

JWS:ef
CC: W. R. Bjorklund

OFFICE OF
DISTRICT ENGINEER
MAR 17 1965
NORTHERN PACIFIC RY. CO.
ST. PAUL, MINN.

Sub-Div.	Br. No. (MP plus)	Total Length	Max. Height	Bents Osmosed	
				Bent Nos	Date
12th S. Line Mandan to Cannonball	#25 25+273	74	18	All	1956
	#26 26+16	74	15	All	1956
Cannonball to Mott	#11.1 11+5130	90	13	1, 2, 3, 6 & 7	1956
	#12 12+4484	90	13	2, 3, 4, 5 & 6	1956
	#18 18+1472	90	17	All	1956
	#29 29+108	120	16	1, 2, 3, 4 (P-3, 4, 5 only) & 8 & 9	1956
	#41.2 41+3897	75	12	1, 2, 5 & 6	1958
	#42 42+3710	90	24	1, 2, 6 & 7	1956
	#58 58+2473	175	39	1 thru 6 & 8	1956
13th Sub. No. Line	#5 5+2974	60	16	All	1955
	#13.1 13+4789	75	22	1, 2, 5 & 6	1956
	#27 27+5258	144	37	1 thru 5 & 8 thru 11	1956
	#35 35+208	30	8	All	1956
	#37 37+1739	75	20	1, 2, 5 & 6	1956
	#46 46+4128	89	24	1, 2, 5, 6 & 7 3 & 4	1955 1956

Sub-Div.	Br. No. (MP plus)	Total Length	Max. Ht.	Bents Osmosed	
				Bent Nos	Date
13th No. Line	#51 51+1384	106	18	1, 2, 5, 6 & 7	1957
	#62 62+2890	218	32	1, 2, 3, 7, 8, 9, 10 & 11	1957
	#80 80+422	242	23'	8 thru 15	1957
	#84 84+5180	180	37	1-4 & 10-13	1957
	#92 92+912	75	16	2, 5 & 6	1956
	#93 93+1041	170	26	10 thru 13	1956
	#95.1 95+3249	148	26	9, 10 & 11	1956
	#103 103+1412	134	28	1-3 & 8-10	1955
	#104 104+3587	136	14	1, 2, 3 & 10	1955
	#113 113+2200	45	8	All	1955
	#118 118+304	105	14	1-3 & 6-8	1955
	#120 120+2791	120	13	1, 2, 7, 8 & 9	1955

3505

MANUFACTURERS OF OSMOSALTS : OSMOPLASTIC : PENTOX : COP-R-NAP : OZ

OSMOSE WOOD PRESERVING CO. of AMERICA, Inc.

980 ELLICOTT STREET, BUFFALO, NEW YORK 14209 — AREA CODE 716 882-5905

Reply to: RAILROAD DIVISION
4939 Monona Drive
Madison, Wis. 53716

March 16, 1965

File: 3505

Mr. W. R. Bjorklund, Assistant Chief Engineer
Northern Pacific Railway Company
St. Paul, Minnesota 55101

Dear Walt:

Thank you very much for your letter of March 12 proposing the cruising of timber trestles on the Mandan North and South Lines. As suggested, I will follow through with Mr. Titus and set up a mutually convenient schedule for making the cruise.

Your continued interest in our service is greatly appreciated.

Sincerely,

John W. Storer
Vice President

JWS:ef

COPY
OSMOSE WOOD PRESERVING CO.

March 16, 1965

Mr. Jack Titus, District Engineer
Northern Pacific Railway Company
St. Paul, Minnesota 55101

Dear Jack:

I have Mr. Bjorklund's letter of March 12 suggesting the Mandan North and South Lines for cruising of timber trestles. Since we will want to evaluate the condition of piles at and below ground line, it will be necessary to wait until the frost is out of the ground. This being the case, I presume that we could shoot for a date sometime during the latter part of April. Does this sound about right?

Prior to selecting a date for this work, it would be very helpful to receive a list of the proposed bridges showing the total length of timber, average height and approximate location. With this information, I can then estimate the amount of time required and the number of men we should line up for this cruising. I'll be looking forward to receiving this information at your convenience.

Very truly yours,

John W. Storer
Vice President

JWS:ef
CC: W. R. Bjorklund