

Minnesota Attorney General: Administrative Rules Proceedings

Copyright Notice:

This material may be protected by copyright law (U.S. Code, Title 17). Researchers are liable for any infringement. For more information, visit www.mnhs.org/copyright.

Version 3
August 20, 2018

MINNESOTA STATE REGULATIONS

Notice of filing by the Commissioner of Administration

We have received on this date, stamped and filed 2 copies of Rules and Regulations pertaining to the Department of Commerce
(Agency or Board)

Regulation No. CS 101 -130 new

Subject: Safe Toys Act - Administration

Department of Administration
Publication, Central Services Division
Documents Section
140 Centennial Office Building
St. Paul, Minnesota 55155
Telephone: (612) 296-2874

FILED
RICHARD L. BRUBACHER
Commissioner of Administration

DEC 21 1973 3:40 pm

BY Eda Staudenmaier
AUTH. SIGNATURE EJ

Stamped and filed with the Secretary of State 12-21-73

Rev. 9-72

adopted

CHAPTER 3 (CS 101 - 130)

Safe Toys Act -- Administration

CS 101 Scope and Purpose. Regulations CS 101 to CS 200 are adopted pursuant to the Safe Toys Act, Laws 1973, Chapter 467, coded as Minnesota Statute 325.381 to 325.391 and are promulgated to assist consumers and businessmen in the interpretation of the statute.

CS 102 Definitions. As used in Chapters 3 & 4 of these Regulations:

(a) "Act" means the Safe Toys Act, Laws 1973, Chapter 467, coded as Minnesota Statutes 325.381 to 325.391.

(b) "Asphyxiation or suffocation" means a toy presents a hazard of asphyxiation or suffocation if in normal use and reasonably foreseeable damage or abuse, its design, manufacture or storage presents a risk of personal injury or illness from interference with normal breathing.

(c) "Child" means any person or persons less than 14 years of age.

(d) "Dealer" means any person that sells or distributes any toy to the general public.

(e) "Director" means the Director of the Consumer Services Section of the Department of Commerce.

(f) "Distributor" means any person that sells or distributes any toy at wholesale.

(g) "Electrical hazard" means a toy presents an electrical hazard if, in normal use or when subjected to reasonably foreseeable damage or abuse, its design or manufacture may cause personal injury or illness by shock or electrocution.

(h) "Flammable" means having a flash point up to 80 degrees Fahrenheit as determined by the Tagliabue Open Cup Tester. The flammability of solids and of the contents of self-pressurized containers shall be determined by methods generally recognized as applicable to the materials or containers and established by these regulations.

(i) "Importer" means any person that imports toys into the State for sale or distribution within the State.

(j) "Manufacturer" means any person that manufactures any toy for sale or distribution.

(k) "Mechanical hazard" means a toy presents a mechanical hazard if, in normal use or when subjected to reasonably

foreseeable damage or abuse, its design or manufacture presents an unreasonable risk of personal injury or illness:

(1) from fracture, fragmentation or disassembly of the toy;

(2) from propulsion of the toy or any part or accessory thereof;

(3) from points or other protusion, surfaces, edges, openings or closures;

(4) from moving parts;

(5) from lack or insufficiency of controls to reduce or stop motion;

(6) as a result of self-adhering characteristics of the toy;

(7) because the toy or any part or accessory thereof may be aspirated or ingested;

(8) because of instability;

(9) from stuffing material which is not free of dangerous or harmful substances;

(10) because of any other aspect of the toy's design or manufacture.

(l) "Mouth toy" means any toy intended to be placed in or in contact with a child's mouth.

(m) "Person" means any individual, partnership, corporation or association.

(n) "Retail purchase price" means the amount of money paid to acquire a toy offered for sale at retail, excluding transportation and shipping charges, interest, finance or service charges and Minnesota Sales and Use Taxes.

(o) "Thermal hazard" means that a toy presents a "thermal hazard" if, in normal use and reasonably foreseeable damage or abuse, its design or manufacture presents an unreasonable risk of personal injury or illness because of heat or from heated parts, substances or surfaces.

(p) "Toxic" means able to produce personal injury or illness to a person through ingestion, inhalation or absorption through any body surface and can apply to any substance other than a radioactive substance.

(q) "Toy" means any toy, game or other article designed, labeled, advertised or otherwise intended for use by children.

CS 103 Adoption of the Federal Hazardous Substances Act by Reference.

(a) The following rules and regulations promulgated pursuant to the Federal Hazardous Substances Act and published as Parts 1500 and 1505 in Title 16, Chapter II, Subchapter C (formerly Title 21, Part 191) of the Code of Federal Regulations in the Federal Register, Vol. 38, No. 187 on Thursday, September 27, 1973 and in effect on October 30, 1973 are incorporated herein by reference and hereby made a part of these regulations (see appendix).

(1) Part 1500.18 (formerly Part 191.9a): Banned toys and other banned articles intended for use by children.

(2) Part 1500.47 (formerly Part 191.17): Method for determining the sound pressure level produced by toy caps.

(3) Part 1500.86 (formerly Part 191.65a): Exemptions from classification as a banned toy or other banned article for use by children.

(4) Part 1505 (formerly Part 191b): Requirements for electrically-operated toys or other electrically-operated articles intended for use by children.

CS 104 Severability Clause. If any provision of Regulations CS 101 to CS 200 or the application thereof to any person or circumstance is held unconstitutional or invalid, the remainder of Regulations CS 101 to CS 200 and the application of such provision to other persons or circumstances shall not be affected thereby.

CS 105 Banned Toys List. The director may, from time to time, publish a list of those toys which fail to meet the standards required by the Act and the regulations adopted pursuant thereto. Such a list shall be for general informational purposes only and shall not constitute an exclusive listing of all toys distributed which are in violation of the Act.

CS 106 Banning & Seizure of Hazardous Toys.

(a) If the director determines that a specific toy is subject to a regulation and fails to meet any standards incorporated therein, he may issue and cause to be served upon the manufacturer and importer a temporary order banning the manufacture, importation, distribution, sale or offering for sale of such toy(s). The order shall be served by registered or certified mail and shall be calculated to give reasonable notice of the time and place for a hearing thereon and shall state the reasons for the entry of the temporary order. The hearing shall be held no later than 10 days after the temporary order has been served upon all parties, after which and within 10 days of the date of the hearing, the director shall issue a further order either vacating, modifying or continuing the order. The order may be modified to include:

(1) directing the manufacturer or importer to repurchase the banned toy(s) in accordance with provisions of CS 107;

(2) directing the manufacturer or importer to bring such toy(s) into conformity with the regulations and standards incorporated therein;

(3) directing such other action as the director deems necessary to ensure compliance with the regulations.

(b) If the director determines that an immediate danger exists to the public health and safety which is caused by a toy which presents an electrical, mechanical or thermal hazard or a toy which presents a hazard due to toxic or flammable properties or properties able to produce asphyxiation or suffocation, he may issue and cause to be served upon the manufacturer, importer or dealer a temporary order banning the manufacture, importation, sale or distribution of such toy. The order shall be served by registered or certified mail and shall be calculated to give reasonable notice of the time and place for a hearing thereon and shall state the reasons for the entry of the temporary order. The hearing shall be held no later than 10 days after the issuance of the temporary order, after which and within 10 days of the date of the hearing, the director shall issue a further order either vacating, modifying or continuing the order.

(c) The director shall apply to the district court to seize toys presenting hazards to the public when no other method to control the hazard exists.

CS 107 Repurchase Procedures.

(a) The procedures prescribed in this regulation shall apply to any toy banned pursuant to the Act, regardless of whether such toy was banned at the time of its sale.

(b) (1) In the case of a person who returns a banned toy which was sold at retail by a dealer, if the person who purchased it from the dealer returns it to him and provides proof of retail purchase price, that dealer shall refund the retail purchase price and shall reimburse the buyer for any reasonable and necessary transportation charges incurred in its return.

(2) In the case of a person who returns a banned toy which was sold at retail by a dealer, if the person who purchased it from the dealer returns it to him and does not provide proof of retail purchase price, the dealer shall refund the person the average retail purchase price charged for such toy during the 12-month period preceding the posting of public notice as required in these regulations. If the dealer is

unable to establish the average retail purchase price charged for such a toy, he shall refund the price he last paid for the toy.

(3) Any dealer who makes reimbursement pursuant to subparagraph (2) above shall, upon request from the director or his employee, furnish the director with any information and records used to determine the average retail price described in subparagraph (2). Such information and records shall be available for a period of 12 months.

(4) Refunds of sales and use taxes shall be governed by the State Statutes and the regulations of the Minnesota Department of Revenue relating to the Sales and Use Tax.

(c) (1) A distributor who has sold a banned toy shall repurchase it from the person to whom he sold it and shall refund that person the price paid the distributor for that toy.

(2) If the distributor is repurchasing the banned toy from a dealer who has reimbursed the purchaser for reasonable and necessary transportation charges pursuant to the requirements of paragraph (b), the distributor shall reimburse that dealer for such charges.

(3) If the distributor requires the return of the toy in connection with the repurchase of it in accordance with this paragraph, the distributor shall reimburse any persons for any reasonable and necessary expenses incurred in returning the toy to the distributor.

(d) (1) A manufacturer or importer who has sold a banned toy shall repurchase it from the person to whom he sold it and shall refund that person the price paid the manufacturer for that toy.

(2) The manufacturer or importer shall reimburse a person to whom he sold a banned toy for any reasonable and necessary transportation charges and expenses paid by said persons pursuant to the requirements of paragraphs (b) and (c).

(3) If the manufacturer or importer requires the return of the toy in connection with his repurchase of it in accordance with this paragraph, he shall reimburse any persons to whom he sold it for any reasonable and necessary expenses incurred in returning the toy to the manufacturer or importer.

(e) The manufacturer or importer of a toy subject to repurchase shall immediately notify, in a manner prescribed by the director, each distributor and other person to whom he sold the toy that the toy is a banned toy and is subject to repurchase under the Act. Such notice shall identify the toy involved, including model number or other distinguishing characteristics, set forth the nature of hazards associated

with the use of the product, provide instructions for return or other disposition of the toy, and advise that any distributor or dealer who receives the notice is required to provide further notice as specified in the following paragraphs. A distributor, upon receiving such notice, shall, in the same manner, immediately notify, in a manner prescribed by the director, each distributor, dealer, and other person to whom he sold such a toy.

(f) (1) A dealer who sells or has sold a banned toy at a retail establishment shall, upon notification that such a product is a banned toy, immediately prepare and prominently display a list containing identification of the banned product including the model number or other distinguishing characteristics, the name and address of the manufacturer and the nature of the hazards associated with the use of the product, along with the procedure by which a refund, repair or replacement may be obtained by the retail purchaser. Each such banned toy shall be maintained on the list for a period of not less than 120 days from the date the dealer received such notification.

(2) The director may, at any time, require the manufacturer or importer to notify distributors and dealers that a product shall be maintained on said list for a longer period. In this case, the distributor shall so notify persons to whom he sold the banned toy and dealers shall so maintain said list.

(3) The list required by (1) above shall be considered prominently displayed if it is available for inspection at a convenient location in the retail establishment, to which the public has access without having to obtain the permission or assistance of a store employee, and if a sign posted in accordance with the provisions of paragraph (g) clearly indicates the location of the list.

(4) A dealer who displays a list of banned toys pursuant to the Federal Hazardous Substances Act or the Consumer Product Safety Act, which list includes each article and all information required to be displayed pursuant to the Safe Toys Act shall have complied with this paragraph.

(g) A dealer who sells or has sold a banned toy at a retail establishment, upon receiving notification that such product is a banned toy, shall immediately prepare and prominently display a "Notice of Refund Procedures for Banned Toys or Articles for Children" as follows. This notice shall be posted on each floor of each such establishment where items similar to the banned toy are displayed or sold. Each such notice, which shall be not less than 22 by 28 inches in size, shall be printed in a color contrasting with the background and shall be so displayed for a period of not less than 120 days from the date the dealer received the latest such notification, or a longer period if so ordered by the director.

NOTICE OF REFUND PROCEDURES FOR BANNED TOYS OR ARTICLES FOR CHILDREN.

IN ACCORDANCE WITH THE MINNESOTA SAFE TOYS ACT, THIS STORE HAS AVAILABLE A LIST OF TOYS AND OTHER CHILDREN'S ARTICLES THAT HAVE BEEN SOLD IN THIS STORE AND THAT HAVE RECENTLY BEEN BANNED BY THE MINNESOTA OFFICE OF CONSUMER SERVICES.

THESE ARTICLES ARE HAZARDOUS AND SHOULD NOT BE USED.

THIS LIST IS AVAILABLE FOR INSPECTION AT:
(describe location where available).

THE LIST CONTAINS IDENTIFICATION OF THE BANNED ARTICLE, THE NATURE OF THE HAZARD ASSOCIATED WITH THE ARTICLE, AND HOW A REFUND, REPAIR OR REPLACEMENT MAY BE OBTAINED.

(h) Any notice posted by a dealer in compliance with the Federal Hazardous Substances Act or the Consumer Product Safety Act and which includes the same information required by the notice in paragraph (g) shall meet the requirements of paragraph (g).

(i) A dealer who sells or has sold a banned toy in other than a retail establishment, shall, upon notification that the product is a banned toy, publicize a clear and conspicuous "Notice of Banned Toy or Children's Article" as follows, in a manner reasonably calculated to reach as many purchasers of the banned product as possible.

NOTICE OF BANNED TOY OR CHILDREN'S ARTICLE

(Insert identification of banned product, including model number or other distinguishing characteristics and name and address of manufacturers).

THE MINNESOTA OFFICE OF CONSUMER SERVICES HAS BANNED THIS PRODUCT AS HAZARDOUS BECAUSE (insert nature of the hazards associated with the use of the product).

THIS PRODUCT SHOULD NOT BE USED. IF YOU HAVE PROOF OF HOW MUCH YOU PAID FOR THE TOY, RETURN THE BANNED PRODUCT TO THE RETAILER WHO SOLD IT TO YOU AND RECEIVE A FULL REFUND OF THE RETAIL PURCHASE PRICE, REPAIR OR REPLACEMENT, AND ANY REASONABLE AND NECESSARY COSTS INCURRED IN RETURNING THE PRODUCT.

IF YOU DO NOT HAVE PROOF OF HOW MUCH YOU PAID FOR THE TOY, YOU MAY RETURN THE TOY TO THE RETAILER WHO SOLD IT TO YOU AND RECEIVE A PARTIAL REFUND, REPAIR OR REPLACEMENT, AND ANY REASONABLE AND NECESSARY COSTS INCURRED IN RETURNING THE ARTICLE.

(j) Any notice published by a dealer in compliance with the Federal Hazardous Substances Act or the Consumer Product Safety Act and which includes the same information required by the notice in paragraph (i) shall meet the requirements of paragraph (i).

(k) The notice provisions of paragraphs (g) and (i) are not mutually exclusive.

CS 108 Manufacturers Initiative. Where a manufacturer or importer discovers that a toy he is selling or has sold is in violation of these regulations, the manufacturer or importer shall initiate the same listing, notification and repurchase procedures as set out in CS 107 and shall notify the director of his action within 72 hours of discovering the violation.

CS 109 (Reserved for future use).

CS 110 (Reserved for future use).

CS 111 (Reserved for future use).

CS 112 (Reserved for future use).

CS 113 (Reserved for future use).

CS 114 (Reserved for future use).

CS 115 Testing of Toys.

(a) Each manufacturer of toys shall test all his toys which are subject to applicable regulations found in CS 101 - 200 and which are currently being manufactured for sale or distribution within the State. The tests shall be conducted to ensure compliance with all applicable regulations and standards found in CS 101 - 200. Each manufacturer shall provide the results of these tests to any person who imports his toy into this state.

(b) Each manufacturer of toys shall test all his toys which are subject to applicable regulations found in CS 101 - 200 prior to introduction for sale or distribution in the State. The tests shall be conducted to ensure compliance with all applicable regulations and standards found in CS 101 - 200. Each manufacturer shall provide the results of these tests to any person who imports his toy into the State.

(c) A copy of all test results for each toy introduced for sale or distribution in the State shall be kept by each manufacturer and importer who manufactures or imports that toy. Such test results shall be presented to the director upon 72 hours notice from the director or his employee.

(d) Pursuant to an order issued to a manufacturer or importer the director may require that all test results be filed with his office prior to the introduction of any new toys into the State for distribution or sale by that manufacturer or importer.

(e) When a manufacturer or importer fails to comply with paragraphs (a) through (d), the director may issue and serve upon that manufacturer or importer an order banning the sale, offering for sale, importantion, distribution, or manufacture of any toy for which test results are not available. The order shall be served by mail and shall be calculated to give reasonable notice of the time and place for a hearing thereon and shall state the reasons for the entry of the order.

(f) The provisions of CS 115 shall be applied to all toys sold in Minnesota 120 days after the effective date of the regulations.

CHAPTER 4 (CS 131 - 200)

Safe Toys Act -- Standards for Toys

CS 131 Toys Containing Glass. (a) No person, firm, corporation, association or agent or employee thereof shall import, manufacture, sell, hold for sale or distribute a toy or other article intended for use by children which contains glass, unless the glass is protected in such a way that no glass particle or edges will be accessible when a toy is subjected to normal use or reasonably foreseeable damage or abuse.

(b) The provisions of Section A shall not apply to non-toy glass articles used during the consumption of food or beverages, glass containers for prescriptions and health and beauty aid products, chemistry sets and other science education sets intended primarily for use by children, children's prescription eyewear, children's vacuum bottles, or light bulbs and similar illuminating devices that are components of toys.

CS 132 Toy Chests and Similar Articles. (a) No person, firm, corporation, association or agent or employee thereof shall import, manufacture, sell, hold for sale or distribute any toy chest or similar article intended for use by children which does not comply with the provisions of Sections B through D of this regulation.

(b) Instructions Included With Nonassembled Toy Chests.

(1) Toy chests and similar articles intended for use by children, unless they are sold completely assembled to the consumer, shall be accompanied by detailed instructions that include an assembly drawing, a list and description of all parts and tools required for assemble, and a full-size diagram of the required bolts and other fasteners.

(2) The instructions shall be written so that an unskilled layman following the instructions can correctly assemble the article without making errors which would result in improper or unsafe assembly. The instructions shall include cautionary statements concerning tightening of bolts and other fasteners.

(c) Requirements for Design and Construction:

(1) The article shall have no components which:

(i) have the potential for causing injury by shearing, scissoring, or pinching actions;

(ii) have the potential for causing laceration or puncture-wound injury;

(iii) have sharp or rough edges;

(iv) are threaded hardware which protrude more than one diameter beyond the internally threaded fastener or structural member.

(2) All wood parts and surfaces shall be smooth and free from splinters, splits, cracks, and similar defects.

(3) No attachments (including, but not limited to, built-in toys, decorations, and design components), and no part thereof which will become accessible when subjected to normal use or reasonably foreseeable damage or abuse, shall have laceration or puncture injury potential.

(4) If the article or a component thereof has a continuous enclosed volume greater than 1.1 cubic feet and a smaller internal dimension of 6 inches or more, it must comply with the following:

(i) the article or component shall have no positive latching device;

(ii) any vertically opening door or lid which is self-closing due to the article's design and which weighs more than 3 pounds shall be counter-balanced and require a force of less than 1½ pounds for opening as measured at the point or dege opposite the hinge(s);

(iii) the article shall be ventilated through at least two openings which together total at least 2 square inches in area. Each such opening shall be located either in the top surface and in the upper ¼ of at least one vertical surface, or in the upper ¼ of at least two vertical surfaces of the enclosure. The openings shall be at least 10 inches apart at their edges as measured across the surface(s). The article shall contain structural features which permit the passage of air when the ventilated surface is contiguous with a solid, flat surface such as a wall.

CS 133 Children's Vacuum Bottles. (a) No person, firm, corporation, association or agent thereof shall import, manufacture, sell, hold for sale or distribute any vacuum bottle with a capacity of 16 ounces or less which is intended for use by children unless it is designed and constructed to pass the tests described in Section b.

(b) Impact Medium. The impact medium shall consist of a 0.125-inch nominal thickness of type IV vinyl-asbestos tile,

as specified in Federal Specification SST-312A, over at least a 2.5-inch thickness of concrete. The impact area shall be at least 3 square feet.

(c) Test Procedure. The test shall consist of dropping a fully assembled vacuum bottle, filled to the neck with water at 36 degrees to 40 degrees Fahrenheit, a minimum of four times from a height of 3 feet. The vacuum bottle shall be dropped in random orientation. After each drop, the test sample shall be allowed to come to rest and examined and evaluated before continuing. If the glass filler breaks on any of the first three drops, the test can be terminated on the particular drop on which the filler breaks. Accessibility of glass particles on or near the impact medium, or in the liquid when the test is completed, shall constitute failure. Accessibility of glass in the liquid shall be determined by opening the cap and emptying the contents.

FILED
RICHARD L. BRUBACHER
Commissioner of Administration
DEC 21 1973
BY Edna Standenmaier
AUTH. SIGNATURE
3:40 P.M.

CS101-130

APPROVED AS TO FORM AND LEGALITY
Dec 20 1973
WARREN SPANNAUS, ATTORNEY GENERAL
BY Robert Wilson
SPECIAL ASSISTANT ATTORNEY GENERAL

STATE OF MINNESOTA
DEPARTMENT OF STATE
FILED
DEC 21 1973 3:15 pm
Arlen I. Erdahl
Secretary of State

APPENDIX

Rules and regulations promulgated pursuant to the Federal Hazardous Substances Act.

Title 16—Commercial Practices

CHAPTER II—CONSUMER PRODUCT SAFETY COMMISSION

SUBCHAPTER C—FEDERAL HAZARDOUS SUBSTANCES ACT REGULATIONS

PART 1500—HAZARDOUS SUBSTANCES AND ARTICLES; ADMINISTRATION AND ENFORCEMENT REGULATIONS

PART 1505—REQUIREMENTS FOR ELECTRICALLY OPERATED TOYS OR OTHER ELECTRICALLY OPERATED ARTICLES INTENDED FOR USE BY CHILDREN

Revision and Transfer

Effective May 14, 1973, sec. 30(a) of the Consumer Product Safety Act (Pub. L. 92-573, 86 Stat. 1231 (15 U.S.C. 2079 (a))), among other things, transferred from the Secretary of Health, Education, and Welfare to the Consumer Product Safety Commission functions under the Federal Hazardous Substances Act.

Before May 14, 1973, the Commissioner of Food and Drugs under delegated authority, promulgated regulations under the Federal Hazardous Substances Act which appear in the Code of Federal Regulations as 21 CFR Parts 191 and 191b. The purpose of this document is to revise and transfer those regulations.

Accordingly, pursuant to sec 30(a) of the Consumer Product Safety Act, the Consumer Product Safety Commission hereby (1) deletes Parts 191 and 191b from Title 21, Chapter I, and (2) revises and reissues the regulations under the Federal Hazardous Substances Act as Parts 1500 and 1505, respectively, of Title 16, Chapter II, Subchapter C, as set forth below.

Any provisions of 21 CFR Parts 191 and 191b having delayed effective dates shall have the same delayed effective date in 16 CFR Parts 1500 and 1505, and these are noted.

The material is revised to update names, titles, cross-references, etc., and to add and clarify certain definitions. The statutory definitions appearing in sec. 2 of the Federal Hazardous Substances Act (15 U.S.C. 1261) have been added to the regulations for convenience and are set forth in 16 CFR 1500.3(b). The definitions that previously appeared in 21 CFR 191.1 have been clarified as to their relationship to the statutory definitions and those that involve the latter are set forth in 16 CFR 1500.3(c).

Since no new requirements are added by this revision, notice and public procedure are not prerequisites to this issuance.

Parts 1500 and 1505 of Title 16, Chapter II, Subchapter C, read as follows:

PART 1500—HAZARDOUS SUBSTANCES AND ARTICLES; ADMINISTRATION AND ENFORCEMENT REGULATIONS

Sec.
1500.1 Scope of subchapter.
1500.2 Authority.
1500.3 Definitions.
1500.4 Human experience with hazardous substances.
1500.5 Hazardous mixtures.
1500.7 Federal preemption of State and local labeling requirements.
1500.12 Products declared to be hazardous substances under section 3(a) of the act.
1500.13 Listing of "strong sensitizer" substances.
1500.14 Products requiring special labeling under section 3(b) of the act.
1500.15 Labeling of fire extinguishers.
1500.17 Banned hazardous substances.
1500.18 Banned toys and other banned articles intended for use by children.
1500.40 Method of testing toxic substances.
1500.41 Method of testing primary irritant substances.
1500.42 Test for eye irritants.
1500.43 Method of test for flashpoint of volatile flammable materials by Tagliabue open-cup apparatus.
1500.44 Method for determining extremely flammable and flammable solids.
1500.45 Method for determining extremely flammable and flammable contents of self-pressurized containers.
1500.46 Method for determining flashpoint of extremely flammable contents of self-pressurized containers.
1500.47 Method for determining the sound pressure level produced by toy caps.
1500.81 Exemptions for food, drugs, cosmetics, and fuels.
1500.82 Exemption from full labeling and other requirements.
1500.83 Exemptions for small packages, minor hazards, and special circumstances.
1500.84 Exemption for unlabeled containers.
1500.85 Exemptions from classification as banned hazardous substances.
1500.86 Exemptions from classification as a banned toy or other banned article for use by children.
1500.121 Labeling requirements; placement, conspicuousness, and contrast.
1500.122 Deceptive use of disclaimers.
1500.123 Condensation of label information.
1500.125 Labeling requirements for accompanying literature.
1500.126 Substances determined to be "special hazards."
1500.127 Substances with multiple hazards.
1500.128 Label comment.
1500.129 Substances named in the Federal Caustic Poison Act.
1500.130 Self-pressurized containers; labeling.
1500.131 Methyl alcohol-base radiator antifreeze; labeling.
1500.132 Ethylene glycol-base radiator antifreeze; labeling.
1500.133 Extremely flammable contact adhesives; labeling.
1500.201 Procedure for the issuance, amendment, or repeal of regulations declaring particular substances to be hazardous substances or banned hazardous substances.
1500.210 Responsibility.
1500.211 Guaranty.
1500.212 Definition of guaranty; suggested forms.
1500.213 Presentation of views under section 7 of the act.
1500.214 Examinations and investigations; samples.

IMPORTS

1500.265 Imports; definitions.
1500.266 Notice of sampling.
1500.267 Payment for samples.
1500.268 Hearing.
1500.269 Application for authorization.
1500.270 Granting of authorization.
1500.271 Bonds.
1500.272 Costs chargeable in connection with relabeling and reconditioning inadmissible imports.

AUTHORITY.—Secs. 2-5, 10, 14, 74 Stat. 372-76, 378-79, as amended, 80 Stat. 1303-05, 83 Stat. 187-89, 84 Stat. 1673 (15 U.S.C. 1261 and note, 1262-64, 1269, 1273) unless otherwise noted.

§ 1500.18 Banned toys and other banned articles intended for use by children.

(a) *Toys and other children's articles presenting mechanical hazards.* Under the authority of section 2(f)(1)(D) of the act and pursuant to provisions of section 3(e) of the act, the Commission has determined that the following types of toys or other articles intended for use by children present a mechanical hazard within the meaning of section 2(s) of the act because in normal use, or when subjected to reasonably foreseeable damage or abuse, the design or manufacture presents an unreasonable risk of personal injury or illness:

(1) Any toy rattle containing, either internally or externally, rigid wires, sharp protrusions, or loose small objects that have the potential for causing lacerations, puncture wound injury, aspiration, ingestion, or other injury.

(2) Any toy having noisemaking components or attachments capable of being dislodged by the operating features of the toy or capable of being deliberately removed by a child, which toy has the potential for causing laceration, puncture wound injury, aspiration, ingestion, or other injury.

(3) Any doll, stuffed animal, or other similar toy having internal or external components that have the potential for causing laceration, puncture wound injury, or similar injury.

(4) Lawn darts and other similar sharp-pointed toys usually intended for outdoor use and having the potential for causing puncture wound injury.

(5) Caps (paper or plastic) intended for use with toy guns and toy guns not intended for use with caps if such caps when so used or such toy guns produce impulse-type sound at a peak pressure leved at or above 138 decibels, referred to 0.0002 dyne per square centimeter, when measured in an anechoic chamber at a distance of 25 centimeters (or the distance at which the sound source ordinarily would be from the ear of the child using it if such distance is less than 25 centimeters) in any direction from the source of the sound. This subparagraph is an interim regulation pending further investigation to determine whether prevention of damage to the hearing of children requires revision hereof.

(6) Any article known as a "baby-bouncer," "walker-jumper," or "baby-walker" and any other similar article (referred to in this subparagraph as "article(s)") which is intended to support very young children while sitting, walking, bouncing, jumping, and/or reclining, and which because of its design has any exposed parts capable of causing amputation, crushing, lacerations, fractures, hematomas, bruises, or other injuries to fingers, toes, or other parts of the anatomy of young children. Included among, but not limited to, the design features of such articles which classify the articles as banned hazardous substances are:

(i) The areas about the point on each side of the article where the frame components are joined together to form an "X" shape capable of producing a scissoring, shearing, or pinching effect.

(ii) Other areas where two or more parts are joined in such a manner as to permit a rotational movement capable of exerting a scissoring, shearing, or pinching effect.

(iii) Exposed coil springs which may expand sufficiently to allow an infant's finger, toe, or any other part of the anatomy to be inserted, in whole or in part, and injured by being caught between the coils of the spring or between the spring and another part of the article.

(iv) Holes in plates or tubes which provide the possibility of insertion, in whole or in part, of a finger, toe, or any part of the anatomy that could then be injured by the movement of another part of the article.

(v) Design and construction that permits accidental collapse while in use.

(7) Toys usually known as clacker balls and consisting of two balls of plastic or another material connected by a length of line or cord or similar connector (referred to as "cord" in § 1500.86(a)(5)), intended to be operated in a rhythmic manner by an upward and downward motion of the hand so that the two balls will meet forcefully at the top and bottom of two semicircles thus causing a "clacking" sound, which toys present a mechanical hazard because their design or manufacture presents an unreasonable risk of personal injury from fracture, fragmentations, or disassembly of the toy and from propulsion of the toy or its part(s).

(b) *Electrically operated toys and other electrical operated children's articles presenting electrical, thermal, and/or certain mechanical hazards.* Under the authority of section 2(f)(1)(D) of the act and pursuant to provisions of section 3(e) of the act, the Commission has determined that the following types of electrically operated toys or other electrically operated articles intended for use by children present electrical, thermal, and/or certain mechanical hazards within the meaning of section 2 (r), (s), and/or (t) of the act because in normal use or when subjected to reasonably foreseeable damage or abuse, the design or manufacture may cause personal injury or illness by electric shock and/or presents an unreasonable risk of personal injury or illness because of heat as from heated parts, substances, or surfaces, or because of certain mechanical hazards:

(1) Any electrically operated toy or other electrically operated article intended for use by children (as defined in § 1505.1(a)(1)) that is introduced into interstate commerce and which does not comply with the requirements of Part 1505 of this chapter.

NOTE.—Paragraph (b)(1) was originally promulgated as 21 CFR 191.9a(b)(1) with an effective date of September 3, 1973 (38 FR 6138).

§ 1500.17 Method for determining the sound pressure level produced by toy caps.

(a) *Equipment required.* The equipment for the test includes a microphone, a preamplifier (if required), and an oscilloscope.

(1) The microphone-preamplifier system shall have a free-field response uniform to within ±2 decibels from 50 hertz to 70 kilohertz or beyond and a dynamic range covering the interval 70 to 160 decibels relative to 20 micronewtons per square meter. Depending on the model, the microphone shall be used at normal or at grazing incidence, whichever gives the most uniform free-field response. The microphone shall be calibrated both before and after the test of a model of cap. The calibration shall be accurate to within ±1 decibel. If the calibration is of the pressure type or of the piston-phone plus electrostatic actuator type, it shall be corrected to free-field conditions in accordance with the manufacturer's instructions.

(2) The oscilloscope shall be the storage type or one equipped with a camera. It shall have a response uniform to within ±1 decibel from 50 hertz to 250 kilohertz or higher. It shall be calibrated to within ±1 decibel against an external voltage source periodically during the tests.

(b) *Procedure.* (1) Use the type pistol that would ordinarily be used with the caps being tested. Place the pistol and testing equipment so that neither the pistol nor the microphone is closer than 1 meter from any wall, floor, ceiling, or other large obstruction. Locate the pistol and the microphone in the same horizontal plane with a distance of 25 centimeters between the diaphragm of the microphone and the position of the explosive. Measure the peak sound pressure level at each of the six designated orientations of the pistol with respect to the measuring microphone. The 0° orientation corresponds to the muzzle of the pistol pointing at the microphone. The 90°, 180°, and 270° orientations are measured in a clockwise direction when looking down on the pistol with its barrel horizontal, as illustrated by the following figure:

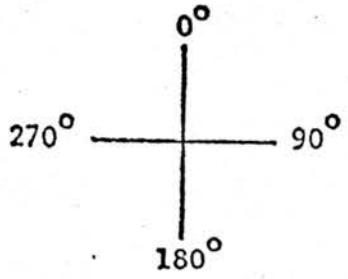

(2) The hammer and trigger orientations are obtained by rotating the pistol about the axis of the barrel, when the pistol is in the 90° or 270° orientation, so that the hammer and the trigger are each respectively closest to and in the same horizontal plane with the microphone.

(3) Fire 10 shots at each of the six orientations, obtaining readings on the oscilloscope of the maximum peak voltage for each shot. Average the results of the 10 firings for each of the six orientations.

(4) Using the orientation that yields the highest average value, convert the value to sound pressure levels in decibels relative to 20 micronewtons per square meter using the response to the calibrated measuring microphone.

§ 1500.86 Exemptions from classification as a banned toy or other banned article for use by children.

(a) The term "banned hazardous substance" as used in section 2(q)(1)(A) of the act (repeated in § 1500.3(b)(15)(i)(A)) of the act shall not apply to the following articles:

(1) Toy rattles described in § 1500.18(a)(1) in which the rigid wires, sharp protrusions, or loose small objects are internal and provided that such rattles are constructed so that they will not break or deform to expose or release the contents either in normal use or when subjected to reasonably foreseeable damage or abuse.

(2) Dolls and stuffed animals and other similar toys described in § 1500.18(a)(3) in which the components that have the potential for causing laceration, puncture wound injury, or other similar injury are internal, provided such dolls, stuffed animals, and other similar toys are constructed so that they will not break or deform to expose such components either in normal use or when subjected to reasonably foreseeable damage or abuse.

(3) Lawn darts and similar sharp-pointed articles not intended for toy use and marketed solely as a game of skill for adults, provided such articles:

(i) Bear the following statement on the front of the panel of the carton and on any accompanying literature:

> WARNING: Not a toy for use by children. May cause serious or fatal injury. Read instructions carefully. Keep out of reach of children.

Such statement shall be printed in sharply contrasting color within a borderline and in letters at least one-quarter inch high on the main panel of the container and at least one-eighth inch high on all accompanying literature.

(ii) Include in the instructions and rules clear and adequate directions and warnings for safe use including a warning against use when any person or animal is in the vicinity of the intended plan or target area.

(iii) Are not sold by toy stores or store departments dealing predominantly in toys and other children's articles.

(4) Any article known as a "baby-bouncer," "walker-jumper," or "baby-walker" and any other similar article (referred to in this subparagraph as "article(s)") described in § 1500.18(a)(6) provided:

(i) The frames are designed and constructed in a manner to prevent injury from any scissoring, shearing, or pinching when the members of the frame or other components rotate about a common axis or fastening point or otherwise move relative to one another; and

(ii) Any coil springs which expand when the article is subjected to a force that will extend the spring to its maximum distance so that a space between successive coils is greater than one-eighth inch (0.125 inch) are covered or otherwise designed to prevent injuries; and

(iii) All holes larger than one-eighth inch (0.125 inch) in diameter and slots, cracks, or hinged components in any portion of the article through which a child could insert, in whole or in part, a finger, toe, or any other part of the anatomy are guarded or otherwise designed to prevent injuries; and

(iv) the articles are designed and constructed to prevent accidental collapse while in use; and

(v) The articles are designed and constructed in a manner that eliminates from any portion of the article the possibility of presenting a mechanical hazard through pinching, bruising, lacerating, crushing, breaking, amputating, or otherwise injuring portions of the human body when in normal use or when subjected to reasonably foreseeable damage or abuse; and

(vi) Any article which is introduced into interstate commerce after the effective date of this subparagraph is labeled:

(A) With a conspicuous statement of the name and address of the manufacturer, packer, distributor, or seller; and

(B) With a code mark on the article itself and on the package containing the article or on the shipping container, in addition to the invoice(s) or shipping document(s), which code mark will permit future identification by the manufacturer of any given model (the manufacturer shall change the model number whenever the article undergoes a significant structural or design modification); and

(vii) The manufacturer or importer of the article shall make, keep, and maintain for 3 years records of sale, distribution, and results of inspections and tests conducted in accordance with this subparagraph and shall make such records available at all reasonable hours upon request by ny officer or employee of the Consumer Product Safety Commission and shall permit such officer or employee to inspect and copy such records, to make such stock inventories as he deems necessary, and to otherwise check the correctness of such records.

(5) Clacker balls described in § 1500.18(a)(7) that have been designed, manufactured, assembled, labeled, and tested in accordance with the following requirements, and when tested at the point of production or while in interstate commerce or while held for sale after shipment in interstate commerce do not exceed the failure rate requirements of the table in paragraph (a)(5)(vi) of this section:

(i) The toy shall be so designed and fabricated that:

(A) Each ball: Weighs less than 50 grams; will not shatter, crack, or chip; is free of cracks, flash (ridges due to imperfect molding), and crazing (tiny surface cracks); and is free of rough or sharp edges around any hole where the cord enters or over any surface with which the cord may make contact. Each ball is free of internal voids (holes, cavities, or air bubbles) if the balls are made of materials other than those materials (such as ABS (acrylonitrile butadiene styrene), nylon, and high-impact polystyrene) that are injection-molded and possess high-impact characteristics.

(B) The cord: Is of high tensile strength, synthetic fibers that are braided or woven, having a breaking strength in excess of 100 pounds; is free of fraying or any other defect that might tend to reduce its strength in use; is not molded in balls made of casting resins which tend to wick up or run up on the outside of the cord; and is affixed to a ball at the center of the horizontal plane of the ball when it is suspended by the cord.

(C) When the cord is attached to the ball by means of a knot, the end beneath the knot is chemically fused or otherwise treated to prevent the knot from slipping out or untying in use.

(ii) The toy shall be tested at the time of production:

(A) By using the sampling procedure described in the table in subdivision (vi) of this subparagraph to determine the number of units to be tested.

(B) By subjecting each ball tested to 10 drops of a 5-pound steel impact rod or weight (2¼-inch diameter with a flat head) dropped 48 inches in a vented steel or aluminum tube (2⅜-inch inside diameter) when the ball is placed on a steel or cast iron mount. Any ball showing any chipping, cracking, or shattering shall be counted as a failure within the meaning of the third column of the table in paragraph (a)(5)(vi) of this section.

(C) By inspecting each ball tested for smoothness of finish on any surface of the ball which may come in contact with the cord during use. A cotton swab shall be rubbed vigorously over each such surface or area of the ball; if any cotton fibers are removed, the ball shall be counted as a failure within the meaning of the fourth column of the table in subdivision (vi) of this subparagraph. The toy shall also be checked to ascertain that there is no visibly perceptible "wicking up" or "running up" of the casting resins on the outside of the cord in the vicinity where the ball is attached.

(D) By fully assembling the toy and testing the cord in such a manner as to test both the strength of the cord and the adequacy with which the cord is attached to the ball and any holding device such as a tab or ring included in the assembly. The fully assembled article shall be vertically suspended by one ball and a 100-pound test applied to the bottom ball. Any breaking, fraying, or unraveling of the cord or any sign of slipping, loosening, or unfastening shall be counted as a failure within the meaning of the fourth column of the table in paragraph (a)(5)(vi) of this section.

(E) By additionally subjecting any ring or other holding device to a 50-pound test load applied to both cords; the holding device is to be securely fixed horizontally in a suitable clamp in such a manner as to support 50 percent of the area of such holding device and the balls are suspended freely. Any breaking, cracking, or crazing of the ring or other holding device shall be counted as a failure within the meaning of the fourth column of the table in paragraph (a)(5)(vi) of this section.

ance with § 1500.47 shall bear the following statement on the carton and in the accompanying literature in accordance with § 1500.121: "WARNING—Do not fire closer than 1 foot to the ear. Do not use indoors."

(ii) Any person who elects to distribute toy caps in accordance with paragraph (a)(6)(i) of this section shall promptly notify the Consumer Product Safety Commission, Bureau of Compliance, Washington, D.C. 20207, of their intention and shall conduct or participate in a program to develop caps that produce a sound pressure level of not more than 138 decibels when tested in accordance with § 1500.47.

(iii) Any person who elects to distribute caps in accordance with paragraph (a)(6)(i) of this section shall, after notification of his intentions to the Commission in accordance with paragraph (a)(6)(ii) of this section, submit to the Consumer Product Safety Commission, Bureau of Compliance, Washington, D.C. 20207, a progress report not less frequently than once every 3 months concerning the status of his program to develop caps that produce a sound level of not more than 138 decibels when tested in accordance with § 1500.47.

PART 1505—REQUIREMENTS FOR ELECTRICALLY OPERATED TOYS OR OTHER ELECTRICALLY OPERATED ARTICLES INTENDED FOR USE BY CHILDREN

Sec.

1505.1 Definitions.
1505.2 Scope of part.
1505.3 Labeling.
1505.4 Manufacturing requirements.
1505.5 Electrical design and construction.
1505.6 Performance.
1505.7 Maximum acceptable surface temperatures.
1505.8 Maximum acceptable material temperatures.

AUTHORITY.—Secs. 2(f)(1)(D), (r), (s), (t), 3(e)(1), 74 Stat. 372, 374, 375, as amended 83 Stat. 187–89 (15 U.S.C. 1261, 1262).

NOTE.—This Part 1505 was originally promulgated as 21 CFR Part 191b in the FEDERAL REGISTER of March 7, 1973 (38 FR 6138), with an effective date of September 3, 1973.

§ 1505.1 Definitions.

(a) The following definitions apply to this Part 1505:

(1) The term "electrically operated toy or other electrically operated article intended for use by children" means any toy, game, or other article designed, labeled, advertised, or otherwise intended for use by children which is intended to be powered by electrical current from nominal 120 volt (110–125 v.) branch circuits. Such articles are referred to in this part in various contexts as "toy" or "electrically operated toy." If the package (including packing materials) of the toy or other article is intended to be used with the product, it is considered to be part of the toy or other article. This definition does not include components which are powered by circuits of 30 volts r.m.s. (42.4 volts peak) or less, or articles designed primarily for use by adults which may be used incidentally by children.

§ 1505.2 Scope of part.

This part sets forth the requirements whereby electrically operated toys and other electrically operated articles intended for use by children (as defined in § 1505.1(a)(1)) are not banned toys or banned articles under § 1500.18(b)(1) of this chapter.

§ 1505.3 Labeling.

(a) *General.* Electrically operated toys, and the instruction sheets and outer packaging thereof, shall be labeled in accordance with the requirements of this section and any other applicable requirements of the Federal Hazardous Substances Act and regulations promulgated thereunder. All labeling shall be prominently and conspicuously displayed under customary conditions of purchase, storage, and use. All required information shall be readily visible, noticeable, clear, and, except where coding is permitted, shall be in legible English (other languages may also be included as appropriate). Such factors governing labeling as location, type size, and contrast against background may be based on necessary condensations to provide a reasonable display.

(b) *Specific items.* (1) The toy shall be marked in accordance with the provisions of paragraph (d) of this section to indicate:

(i) The electrical ratings required by paragraph (c) of this section.

(ii) Any precautionary statements required by paragraph (e) of this section.

(2) The shelf pack or package of the toy shall be labeled in accordance with the provisions of paragraph (d) of this section to indicate:

(i) The date (month and year) of manufacture (or appropriate codes).

(ii) The electrical ratings required by paragraph (c) of this section.

(iii) Any precautionary statements required by paragraph (e) of this section.

(3) Each toy shall be provided with adequate instructions that are easily understood by children of those ages for which the toy is intended. The instructions shall describe the applicable installation, assembly, use, cleaning, maintenance (including lubrication), and other functions as appropriate. Applicable precautions shall be included as well as the information required by paragraphs (b)(1) and (2) of this section. The instructions shall also contain a statement addressed to parents recommending that the toy be periodically examined for potential hazards and that any potentially hazardous parts be repaired or replaced.

(4) If a toy is produced or assembled at more than one establishment, the toy and its shelf pack or package shall have a distinctive mark (which may be in code) identifying the toy as the product of a particular establishment.

(c) *Rating.* (1) A toy shall be marked to indicate its rating in volts and also in amperes and/or watts.

(2) If a toy utilizes a single motor as its only electric energy consuming component, the electrical rating may be marked on a motor nameplate and need not be marked elsewhere on the toy if the nameplate is readily visible after the motor has been installed in the toy.

(3) A toy shall be rated for alternating current only, direct current only, or both alternating and direct current.

(4) The alternating current rating shall include the frequency or frequency range requirement, if necessary because of a special component.

(d) *Markings.* (1) The markings required on the toy by paragraph (b) of this section shall be of a permanent nature, such as paint-stenciled, die-stamped, molded, or indelibly stamped. The markings shall not be permanently obliterable by spillage of any material intended for use with the toy and shall not be readily removable by cleaning with ordinary household cleaning substances. All markings on the toy and labeling of the shelf pack or package required by paragraph (b) of this section shall contrast sharply with the background (whether by color, projection, or indentation) and shall be readily visible and legible. Such markings and labeling shall appear in lettering of a height not less than that specified in paragraph (d)(2) of this section, except that those words shown in capital letters in paragraph (e) of this section shall appear in capital lettering of a height not less than twice that specified in paragraph (d)(2) of this section.

(2) Minimum lettering heights shall be as follows:

SURFACE AREA DISPLAYING MARKING, MINIMUM HEIGHT OF LETTERING

Square inches	*Inches*
Under 5	1/16
5 or more and under 25	1/8
25 or more and under 100	3/16
100 or more and under 400	1/4
400 or more	1/2

(e) *Precautionary statements*—(1) *General.* Electrically operated toys shall bear the statement: "CAUTION—ELECTRIC TOY." The shelf pack or package and the instructions of such toys shall bear the statement in the upper right-hand quarter of the principal display panel: "CAUTION—ELECTRIC TOY: Not recommended for children under ____ years of age. As with all electric products, precautions should be observed during handling and use to prevent electric shock." The blank in the preceding statement shall be filled in by the manufacturer, but in no instance shall the manufacturer indicate that the article is recommended for children under 8 years of age if it contains a heating element. In the case of other electrically operated products which may not be considered to be "toys" but are intended for use by children, the term "ELECTRICALLY OPERATED PRODUCT" may be substituted for the term "ELECTRIC TOY."

(2) *Thermal hazards.* (i) Toys having Type C or Type D surfaces (described in § 1505.6(g)(2)) which reach temperatures greater than those shown in paragraph (e)(2)(ii) of this section shall be defined as hot and shall be marked where readily noticeable when the hot surface is in view with the statement: "HOT—Do Not Touch." When the marking is on other than the hot surface, the word "HOT" shall be followed by appropriate descriptive words such as "Molten Material," "Sole Plate," or "Heating Element."

and the statement "Do Not Touch." An alternative statement for a surface intended to be handheld as a functional part of the toy shall be "HOT _____— Handle Carefully," the blank being filled in by the manufacturer with a description of the potential hazard such as "Curler" or "Cooking Surface."

(ii) Surfaces requiring precautionary statements of thermal hazards are those exceeding the following temperatures when measured by the test described in § 1505.6(g)(4):

Surface type (see § 1505.6 (g)(2))	Thermal inertia type [1]	Temperature	
		Degrees C.	Degrees F.
C	1	65	149
C	2	75	167
C	3	85	185
C	4	95	203
D	1	55	131
D	2	70	158
D	3	80	176
D	4	90	194

[1] Thermal inertia types are defined in terms of lambda as follows:

Type 1: Greater than 0.0015 (e.g., most metals).
Type 2: More than 0.0005 but not more than 0.0015 (e.g., glass).
Type 3: More than 0.0001 but not more than 0.0005 (e.g., most plastics).
Type 4: 0.0001 or less (e.g., future polymeric materials).
The thermal inertia of a material can be obtained by multiplying the thermal conductivity (cal./cm./sec./degrees C.) by the density (gm./cm.^{3}) by the specific heat (cal./gm./degrees C.)

(3) *Lamp hazards*—(i) *Replaceable incandescent lamps.* A toy with one or more replaceable incandescent lamps, having a potential difference of more than 30 volts r.m.s. (42.4 volts peak) between any of its electrodes or lampholder contacts and any other part or ground, shall be marked inside the lamp compartment where readily noticeable during lamp replacement with the statement: "WARNING—Do not use light bulbs larger than —— watts", the blank being filled in by the manufacturer with a number specifying the wattage rating of the lamp. Such toys shall bear the statement: "WARNING—Shock Hazard. Pull plug before changing light bulb" on the outside of the lamp compartment where it will be readily noticed before gaining access to the lamp compartment.

(ii) *Nonreplacement incandescent lamps.* A toy which utilizes one or more nonreplaceable incandescent lamps (other than pilot or indicator lamps) shall be marked where clearly visible with the statement: "SEALED UNIT—Do not attempt to change light bulb" or equivalent.

(4) *Water.* If not suitable for immersion in water, a toy cooking appliance (such as a corn popper, skillet, or candymaker) or other article which may conceivably be immersed in water shall be marked with the statement: "DANGER—To prevent electric shock, do not immerse in water; wipe clean with damp cloth" or equivalent.

§ 1505.4 Manufacturing requirements.

(a) *General.* (1) Only materials safe and suitable for the particular use for which the electrically operated toy is intended shall be employed.

(2) Toys shall be produced in accordance with detailed material specifications, production specifications, and quality assurance programs. Quality assurance programs shall be established and maintained by each manufacturer to assure compliance with all requirements of this part.

(3) The manufacturer or importer shall keep and maintain for 3 years after production or importation of each lot of toys (i) the material and production specifications and the description of the quality assurance program required by paragraph (a)(2) of this section, (ii) the results of all inspections and tests conducted, and (iii) records of sale and distribution. These records shall be made available upon request at reasonable times to any officer or employee of the Consumer Product Safety Commission. The manufacturer or importer shall permit such officer or employee to inspect and copy such records, to make such inventories of stock as he deems necessary, and to otherwise verify the accuracy of such records.

(4) Toys shall be constructed and finished with a high degree of uniformity and as fine a grade of workmanship as is practicable in a well-equipped manufacturing establishment. Each component of a toy shall comply with the requirements set forth in this part.

(b) [Reserved]

(c) *Protective coatings.* Iron and steel parts shall be suitably protected against corrosion if the lack of a protective coating would likely produce a hazardous condition in normal use or when the toy is subjected to reasonably foreseeable damage or abuse.

(d) *Mechanical assembly*—(1) *General.* A toy shall be designed and constructed to have the strength and rigidity necessary to withstand reasonably foreseeable damage and abuse without producing or increasing a shock, fire, or other accident hazard. An increase in hazards may be due to total or partial structural collapse of the toy resulting in a reduction of critical spacings, loosening or displacement of one or more components, or other serious defects.

(2) *Mounting.* Each switch, lampholder, motor, automatic control, transformer, and similar component shall be securely mounted and shall be prevented from turning, unless the turning of such component is part of the design of the toy and produces no additional hazard such as reduced spacings below acceptable levels or stress on the connection. Friction between tight-fitting surfaces shall not be considered sufficient for preventing the turning of components. The proper use of a suitable lockwasher or a keyed and notched insert plus a suitable lockwasher for singe-hole mountings shall be acceptable. Each toy shall be designed and constructed so that vibrations occurring during normal operation and after reasonably foreseeable damage or abuse will not affect it adversely. Brush caps shall be tightly threaded or otherwise designed to prevent loosening.

(3) *Structural integrity.* Heating elements shall be supported in a substantial and reliable manner and shall be structurally prevented from making contacts inside or outside of the toy which may produce shock hazards. The current-carrying component(s) of the heating element shall be enclosed, and the enclosure shall be designed or insulated to prevent the development of a shock or fire hazard that may result from element failure. A toy operating with a gas or liquid under pressure, such as an electrically operated steam engine, shall be tested with respect to its explosion hazard and shall be provided with a pressure relief device that will discharge in the safest possible direction; that is, avoiding direct human contact and avoiding the wetting of electrical contacts.

(e) *Insulating material.* (1) Material to be used for mounting uninsulated live electrical elements shall be generally accepted as suitable for the specific application, particularly with regard to electrical insulation (voltage breakdown) and good aging characteristics (no significant change in insulating characteristics over the expected lifetime of the toy).

(2) Material used to insulate a heating element from neighboring parts shall be suitable for the purpose. If plain asbestos in a glass braid is used to so insulate the heating element, it shall be tightly packed and totally enclosed by the braid, and the overall thickness, including the braid, shall not be less than one-sixteenth inch. Hard fiber may be used for electrically insulating bushings, washers, separators, and barriers, but is not sufficient as the sole support of uninsulated live metal parts.

(f) *Enclosures*—(1) *General.* Each toy shall have an enclosure constructed of protective material suitable for the particular application, for the express purpose of housing all electrical parts that may present a fire, shock, or other accident hazard under any conditions of normal use or reasonably foreseeable damage or abuse. Enclosures shall meet the performance requirements prescribed by § 1505.6(b).

(2) *Accessibility.* An enclosure containing a wire, splice, brush cap, connection, electrical component, or uninsulated live part or parts at a potential of more than 30 volts r.m.s. (42.4 volts peak) to any other part or to ground:

(i) Shall be sealed by welding, riveting, adhesive bonding, and/or by special screws or other fasteners not removable with a common household tool (screwdriver, pliers, or other similar household tool) used as intended; and

(ii) Shall have no opening permitting entry of a 0.010-inch-diameter music wire that could contact a live part. Cross-notch-head screws, spring clips, bent tabs, and similar fasteners shall not be considered suitable sealing devices for enclosures since they are easy to remove with common household tools. Bent tabs shall be acceptable if, due to metal thickness or other factors, they successfully resist forceful attempts to dislodge them with ordinary tools.

(3) *Nonapplication.* The requirements of this paragraph are not applicable to an insulating husk enclosure or equivalent that covers the electrodes of a replaceable incandescent lamp and its lampholder contacts. The primary function of an enclosure containing a lamp shall be to protect it from breakage during normal use or reasonably foreseeable damage or abuse.

(g) *Spacings.* The distance, through air or across the surface of an insulator, between uninsulated live metal parts and a metallic enclosure and between uninsulated live metal parts and all other metal parts shall be suitable for the specific application as determined by the dielectric strength requirements prescribed by § 1505.6(e)(2). Electrical insulating linings on barriers shall be held securely in place.

(h) *Special safety features*—(1) *Moving parts.* If the normal use of a toy involves accident hazards, suitable protection shall be provided for the reduction of such hazards to an acceptable minimum. For example, rotors, pulleys, belting, gearing, and other moving parts shall be enclosed or guarded to prevent accidental contact during normal use or when subjected to reasonably foreseeable damage or abuse. Such enclosure or guard shall not contain openings that permit entrance of a ¼-inch-diameter rod and present a hazardous condition.

(2) *Switch marking.* Any toy having one or more moving parts which perform an inherent function of the toy and which may cause personal injury shall have a switch that can deenergize the toy by a simple movement to a plainly marked "OFF" position. Momentary contact switches which are normally in the "OFF" position need not be so marked.

(3) *Electrically operated sewing machines.* Electrically operated toy sewing machines shall be designed and constructed to eliminate the possibility of a child's finger(s) being pierced by a needle. For the purpose of this subparagraph, a clearance of not more than five thirty-seconds of an inch below the point of the needle when in its uppermost position or below the presser foot, if provided, shall be considered satisfactory.

(4) *Pressure relief valves.* A pressurized enclosure shall have an automatic pressure relief device and shall be capable of withstanding hydrostatic pressure equal to at least five times the relief pressure.

(5) *Containers for heated materials.* Containers intended for holding molten compounds and hot liquids shall be designed and constructed to minimize accidental spillage. A pot or pan having a lip and one or more properly located pouring spouts and an adequately thermally insulated handle may provide satisfactory protection. Containers intended solely for baking need not be designed and constructed to minimize accidental spillage. Containers shall be of such material and construction that they will not deform or melt when subjected to the maximum operating temperature occurring during normal use or after reasonably foreseeable damage or abuse.

(6) *Water.* Electrically operated toys (such as toy irons) shall not be designed or manufactured to be used with water except for toy steam engines or other devices in which the electrical components are separate from the water reservoir and are completely contained in a sealed chamber. Toys requiring occasional or repeated cleaning with a wet cloth shall be constructed to prevent seepage of water into any electrically active area that may produce a hazardous condition.

§ 1505.5 Electrical design and construction.

(a) *Switches.* (1) Switches and other control devices of electrically operated toys shall be suitable for the application and shall have a rating not less than that of the load they control (see § 1505.6(e)(5)(ii) regarding electrical switch overload). A switch that controls a replaceable incandescent lamp, electrode, or lampholder contact which is at a potential of more than 30 volts r.m.s. (42.4 volts peak) to any other part or to ground shall open both sides of the circuit and shall have a marked "OFF" position. A switch that may reasonably be expected to be subjected to temperatures higher than 50° C. (122° F.) shall be constructed of materials which are suitable for use at such temperatures.

(2) Switches shall be located and protected so that they are not subject to mechanical damage that would produce a hazard in normal use or from reasonably foreseeable damage or abuse (see § 1505.6(b)).

(b) *Lamps.* (1) A replaceable incandescent lamp having a voltage of more than 30 volts r.m.s. (42.4 volts peak) between any of its electrodes or lampholder contacts and any other part or ground shall be in an enclosure that has at least one door or cover permitting access to the lamp. Such door(s) or cover(s) of the enclosure shall be so designed and constructed that they cannot be opened manually or with a flat bladed screwdriver or pliers.

(2) With all access doors and covers closed, the lamp enclosure shall have no opening that will permit entry of a straight rod 6 inches long and one-fourth inch in diameter if such entry would present an electrical hazard. The lamp shall be located no less than one-half inch from any ¼-inch-diameter opening in the enclosure.

(3) A toy having one or more lampholders shall be designed and constructed so that no live parts other than the contacts of the lampholders are exposed to contact by persons removing or replacing lamps. The shells of all lampholders for incandescent lamps shall be at the same potential.

(4) If the potential between the contacts of a lampholder for a replaceable incandescent lamp and any other part or ground is greater than 30 volts r.m.s. (42.4 volts peak), the contacts shall be located in an insulating husk or equivalent.

(c) *Transformers.* Transformers that are integral parts of toys shall be of the 2-coil insulated type.

(d) *Automatic controls.* Automatic controls for temperature regulation shall have the necessary capacity and reliability for their particular application.

(e) *Power supply connections (cords and plugs).* (1) A toy shall be provided with a suitable means for attachment to the power supply circuit.

(2) A toy requiring a power cord shall have a flexible cord that is permanently attached to the toy.

(3) The perimeter of the face of the attachment-plug cap shall be not less than five-sixteenths of an inch from any point on either blade of the plug.

(4) The body of the attachment-plug cap shall decrease in cross section from the face but shall have an expansion of the body, after a suitable distance from the face, sufficient to provide an effective finger grip.

(5) A flexible electrical power cord provided on a toy shall be type SP-2 (as defined in the "National Electrical Code," Chapter 4, article 400, pages 184–194 (1971),[2] published by the National Fire Protection Association), or its equivalent, or a heavier general-use type, and shall be not less than 5 feet nor more than 10 feet in length when measured as the overall length of the attached cord outside the enclosure of the toy, including fittings, up to the face of the attachment-plug cap.

(6) A flexible cord and plug shall have a current-carrying capacity of not less than the ampere rating of the toy.

(7) Cords on toys which are intended to come in direct contact with water or other liquids during use shall be of a jacketed type. Cords on toys with which water or other liquids are to be indirectly used (such as for cooling a mold) shall be plastic covered.

(8) Transformers in which the primary coil connects directly to the branch circuit outlet shall not be subject to the requirements of paragraphs (e)(2), (4), and (5) of this section.

(f) *Bushings.* (1) At the point where a power supply cord passes through an opening in a wall, barrier, or the overall enclosure of a toy, a suitable and substantial bushing, insulating bushing, or equivalent shall be reliably secured in place and shall have smooth surfaces and well-rounded edges against which the cord may bear.

(2) If a cord hole is in wood, porcelain, phenolic composition, or other suitable insulating material, the surface of the hole is acceptable without a bushing if the edges of the hole are smooth and well-rounded. Where a separate insulating bushing is required, a bushing made of ceramic material or a suitable molded composition is acceptable if its edges are smooth and well-rounded.

(3) In no instance shall a separate bushing of wood, rubber, or any of the hot-molded shellac-and-tar compositions be considered acceptable.

(g) *Wiring.* (1) The internal wiring of a toy shall consist of suitable insulated conductors having adequate mechanical strength, dielectric properties, and electrical capacity for the particular application.

(2) Wireways shall be smooth and entirely free of sharp edges, burrs, fins, moving parts that may abrade conductor insulation. Each splice and connection shall be mechanically secure, shall provide adequate and reliable electrical contact, and shall be provided with insulation at least equivalent to that of the wire involved unless adequate spacing between the splice and all other metal parts is permanently assured.

(3) A wire connector for making a splice in a toy shall be a type that is applied by a tool and for which the application force of the tool is independent of the force applied by the operator.

(4) Soldered connections shall be made mechanically secure before soldering.

(5) Current-carrying parts shall be made of silver, copper, a copper alloy, or other electrically conductive material suitable for the particular application.

(h) *Strain relief.* (1) A means of strain relief shall be provided to prevent mechanical stress on a flexible cord from being transmitted to terminals, splices, or interior wiring.

(2) If suitable auxiliary insulation is provided under a clamp for mechanical protection, clamps of any material are acceptable for use on Type SP–2 (as defined in the "National Electrical Code," chapter 4, article 400, pages 184–194 (1971),[3] published by the National Fire Protection Association), or equivalent rubber-insulated cord. For heavier types of thermoplastic-insulated cord, clamps may be without auxiliary insulation unless the clamp may damage the cord insulation.

(3) A flexible cord shall be prevented from being pushed into the toy through the cord-entry hole if such displacement would result in a hazardous condition.

(4) A knot in the cord shall not be considered an acceptable means of strain relief, but a knot associated with a loop around a smooth, fixed structural component shall be considered acceptable.

(i) *Additional requirements.* Except for the electrodes of a replaceable incandescent lamp and its lampholder contacts, a potential of more than 30 volts r.m.s. (42.4 volts peak) shall not exist between any exposed live part in a toy and any other part or ground.

§ 1505.6 Performance.

(a) *General.* Electrically operated toys and components thereof shall be tested by the appropriate methods described in this section and shall pass the tests in such a manner as to provide the necessary assurance that normal use and reasonably foreseeable damage or abuse will not produce a hazard or a potentially hazardous condition. The toy shall be capable of passing all applicable tests with any door, cover, handle, operable part, or accessory placed in any normal position. A toy shall not present a fire, casualty, or shock hazard when operated continuously for 6 hours under conditions of normal use and reasonably foreseeable damage or abuse, including the most hazardous position in which the toy can be left.

(b) *Enclosures.* For purposes of this section, the term "enclosure" means any surface or surrounding structure which prevents access to a real or potential hazard. An enclosure shall withstand impact, compression, and pressure tests (see paragraphs (b) (1), (2), and (3) of this section) without developing any openings above those specified, reduction of electrical spacings below those specified, or other fire, casualty, or shock hazards, including the loosening or displacement of components but excluding breakage of a lamp. After completion of each test, the toy shall comply with the requirements of the dielectric strength test described in paragraph (e) (2) of this section and, upon visual examination, shall not evidence the development of any hazards. Rupture of a fuse shall be considered a test failure.

(1) *Impact test.* A toy weighing 10 pounds or less shall be dropped four times from a height of 3 feet onto a 2½ inch thick concrete slab covered with 0.125 inch nominal thickness vinyl tile. The impact area shall be at least 3 square feet. The test shall be conducted while the toy is energized and operating and with all dead metal of the toy that may be energized connected together electrically and grounded through a 3-ampere plug fuse. The toy shall be dropped in random orientation. After each drop the test sample shall be allowed to come to rest and examined and evaluated before continuing.

(2) *Compression test.* Any area on the surface of the enclosure that is accessible to a child and inaccessible to flat-surface contact during the impact test shall be subjected to a direct force of 20 pounds for 1 minute. The force shall be applied over a period of 5 seconds through the axis of a ½-inch-diameter metal rod having a flat end with the edge rounded to a radius of one thirty-second of an inch to eliminate sharp edges. The axis of the rod shall be perpendicular to the surface being tested. During the test the toy shall rest on a flat, hard surface in any test-convenient position.

(3) *Pressure test.* If any portion of the top of a toy has a flat surface measuring 24 square inches or more and a minor dimension of at least 3 inches, that surface shall be subjected to a direct vertical pressure increasing to 50 pounds over a period of 5 seconds and maintained for 1 minute. The force shall be applied through a steel ball 2 inches in diameter. During the test the toy shall be in an upright position on a flat, horizontal solid surface.

(c) *Handles and knobs*—(1) *General.* For the purposes of tests in this paragraph, the parts of a lifting handle on a toy that are within seven-sixteenths of an inch of the surface to which the handle is attached, or the parts of a lifting knob that are within one-fourth inch of the surface to which the knob is attached, are considered to be for support purposes, and the remainder of the handle or knob is considered to be generally functional in nature. A handle or knob shall withstand crushing and lifting tests (see paragraphs (c) (2) and (3) of this section) without fracture of the handle or knob, development of an opening that may pinch the hand, or breakage of the means used to fasten the handle or knob in place.

(2) *Crushing test.* The functional portion of a handle or knob shall be subjected to a crushing force increasing to 20 pounds over a period of 5 seconds and maintained for 1 minute. The force shall be applied through two flat and parallel hardwood blocks, each at least 2½ inches thick and each having dimensions slightly exceeding those of the handle or knob being tested. The crushing force between the blocks shall be exerted in any direction perpendicular to the major axis of the handle or knob.

(3) *Lifting test.* The support portion of a handle or knob shall be subjected to a force equal to four times the weight of the object it is intended to support. The direction of the lifting force shall be as intended by the design of the toy and shall be applied through a ½-inch-wide strap through or around a handle or by fingers or the equivalent on a knob. The force shall be applied over a period of 5 seconds through the center of gravity of the toy and maintained for 1 minute.

(d) *Stability.* A toy shall not overturn while resting in an upright position on a flat surface inclined 15° from horizontal. No spillage of molten material or hot liquids from containers shall occur while the toy is operating in this position under normal conditions of use. During this test, casters, if any, shall be in the position most likely to result in tipping, but shall not be artificially held in one position to prevent a natural rotation to another position.

(e) *Electrical*—(1) *Power input.* The actual current flow in a toy without a heating element shall not exceed 110 percent of the rated value, and shall not exceed 5.5 amperes, at rated voltage. The power input to a toy with a heating element shall not exceed 105 percent of the rated value at rated voltage. The power input rating of a toy employing one or more incandescent lamps as the only power-consuming components shall be considered to be the total rated wattage of such lamps. The rated voltage shall be considered to be the mean value of a marked voltage range.

(2) *Dielectric strength.* (i) A toy shall be capable of withstanding without breakdown for 1 minute a 60-cycle-per-second (60 Hertz) essentially sinusoidal potential of 1,000 volts applied between live parts and any dead metal parts.

(ii) If a toy employs a low-voltage secondary winding (either in the form of a conventional transformer or as an insulated coil of a motor), the toy shall also be capable of withstanding without breakdown for 1 minute a sinusoidal test potential applied between the high-voltage and low-voltage windings. The test potential shall be applied at the rated frequency of the toy and shall have a value of 1,000 volts plus twice the rated voltage of the high-voltage winding. The test potential shall be supplied from a suitable capacity-testing transformer, the output voltage of which can be regulated. The waveform of the test voltage shall approximate a sine wave as closely as possible.

[3] Copies may be obtained from: National Fire Protection Association, 60 Batterymarch Street, Boston, MA 02110.

[3] Copies may be obtained from: National Fire Protection Association, 60 Batterymarch Street, Boston, MA 02110.

(iii) The applied test potential shall be increased rapidly and uniformly from zero until the required test value is reached and shall be held at that value for 1 minute. Unless otherwise specified, the toy shall be at the maximum operating temperature reached in normal use prior to conducting the tests.

(iv) The dielectric strength requirements of this subparagraph may also be determined by subjecting the toy to a 60-cycle-per-second (60 Hertz) essentially sinusoidal potential of 1,200 volts for 1 second. If the dielectric strength is determined by this method, the toy need not be in a heated condition.

(3) *Leakage current and repeated dielectric withstand tests.* (i) Both before and after being conditioned, a toy intended to operate from a source exceeding 42.4 volts peak shall:

(*a*) Not have a leakage current exceeding 0.5 milliampere, except that during the interval beginning 5 seconds and terminating 10 minutes after the toy is first energized, the leakage current of toys with heating elements other than lamps shall not exceed 2.5 milliamperes; and

(*b*) Comply with the requirements of a repeated dielectric withstand test both with and without preheating.

(ii) All accessible parts of a toy shall be tested for leakage current. If an insulating material is used for the enclosure or part of the enclosure, the leakage current shall be measured using a metal foil with an area not exceeding 10 by 20 centimeters in contact with accessible surfaces of such insulating material. Where the accessible surface of insulating material is less than 10 by 20 centimeters, the metal foil shall be the same size as the surface. The metal foil shall be so applied that it will not affect the temperature of the toy. The accessible parts shall be tested individually, collectively, and from one part to another.

(iii) Following the initial leakage current test, the toy shall be cooled down or heated up to 32° C. (90° F.). The toy shall then be conditioned for 48 hours in air at a temperature of 32°±2° C. (89.6°±3.6° F.) and with a relative humidity of 90–95 percent. The specified relative humidity shall be maintained inside a closed compartment in which a saturated solution of potassium sulphate is kept in a suitable container. Leakage current measurements shall be made, as specified in paragraph (e)(3)(ii) of this section and before the toy is energized, while the toy is in the humidity compartment.

(iv) With the connections intended for the source of supply connected thereto and then connected to the ungrounded side of a power supply circuit having a voltage equal to 110 percent of the rated voltage of the toy, the leakage current through a noninductive 1,500-ohm resistor connected between the grounded side of the supply circuit and each dead metal part (accessible and inaccessible) shall, when stable, be measured in accordance with the test provisions established in ANSI Standard C 101.1–1971, "American National Standard for Leakage Current for Appliances," approved November 17, 1970,[4] published by American National Standards Institute.

The toy shall then be removed from the humidity chamber, energized, and tested again after attaining its normal operating temperature. From these measurements, a leakage current with no resistance shall be calculated and used to determine compliance.

(v) For a toy whose outer enclosure consists wholly or partly of insulating material, the term "dead metal part" means metal foil tightly wrapped around the exterior of the enclosure in a manner that covers, but does not enter into, any enclosure openings.

(4) *Motor operation.* (i) A motor provided as part of a toy shall be capable of driving its maximum normal load in the toy without introducing any potentially hazardous condition. The performance of the toy shall be considered unacceptable if, during the test, temperatures in excess of those specified in § 1505.7 for Type D surfaces are attained on any accessible surface. The performance of the toy shall also be considered unacceptable if the rise in temperature during the test causes melting, scorching, embrittlement, or other evidence of thermal damage to the insulating material used to prevent exposure of live metal parts.

(ii) A motor-operated toy shall be tested with the motor stalled if the construction of the toy is such that any person can touch moving parts associated with the motor from outside the toy. The performance of the toy shall be considered unacceptable if, during the test, temperatures higher than those specified in § 1505.8 are attained or if temperatures higher than those specified for Type C surfaces in § 1505.7 are attained on any accessible surface of the motor.

(5) *Overload*—(i) *Motor.* A motor-control switch that is a part of a toy shall be horsepower-rated to cover the load or shall be capable of performing acceptably when subjected to an overload test consisting of 50 cycles of operation by making and breaking the stalled-rotor current of the toy at maximum rated voltage. There shall be no electrical or mechanical failure nor any visible burning or pitting of the switch contacts as a result of this test.

(ii) *Switch.* To determine if a motor-control switch is capable of performing acceptably when subjected to overload conditions, the toy shall be connected to a grounded supply circuit of rated frequency and maximum rated voltage with the rotor of the motor locked into position. During the test, exposed dead metal parts of the toy shall be connected to ground through a 3-ampere plug fuse such that any single pole, current-rupturing device will be located in the ungrounded conductor of the supply circuit. If the toy is intended for use on direct current, or on direct current as well as alternating current, the exposed dead metal parts of the toy shall be so connected as to be positive with respect to a single pole, current-rupturing device. The switch shall be operated at a rate of not more than 10 cycles per minute. The performance of the toy shall be considered unacceptable if the fuse in the grounding connection is blown during the test.

(f) *Hydrokinetic*—(1) *General.* Electrically operated toy steam engines shall be capable of performing acceptably when subjected to the tests described in this paragraph.

(2) *Preliminary test.* The ultimate strength of the boiler assembly shall first be determined by applying a hydrostatic pressure to the boiler with all openings blocked (the pressure-relief valve, steam exhausts, and any whistle or other accessory shall be removed and the resulting openings sealed); however, a water or other type of gage shall be left in place. The hydrostatic pressure shall be applied slowly and the ultimate value which is attained shall be recorded.

(3) *Pressure-relief test.* A pressure gage shall be connected to the boiler assembly which shall then be operated normally. The pressure at which the pressure-relief valve functions shall be noted while the engine is shut off (if a shutoff valve is provided) and with the whistle, if any, turned off. The test shall be discontinued and shall be considered a failure if the observed pressure exceeds one-fifth the value attained in the preliminary test described in paragraph (f)(2) of this section.

(4) *Operating pressure test.* If the boiler is still intact and no failure has occurred, the pressure-relief valve shall then be rendered inoperable and all other valves (such as a whistle and exhaust from the assembly) shall be tightly closed. Operations shall be continued until the pressure becomes constant. This test shall be discontinued and shall be considered a failure if the observed pressure exceeds one-third the value attained in the preliminary test described in paragraph (f)(2) of this section. During this test, all valves, gaskets, joints, and similar components shall be sufficiently tightened to prevent leakage. Rupture of the boiler or of any other fittings supplied with the engine shall be considered a failure.

(5) *Hydrostatic test.* If there has been no failure, two previous untested toys shall withstand for 1 minute a hydrostatic pressure of 5 times the pressure at which the safety valve operated or 3 times the constant pressure observed with the presure-relief valve inoperable, whichever is greater. During this test, all openings shall be blocked (the pressure-relief valve, steam exhaust from the assembly, and any whistle or other outlet); however, a water or other type of gage shall remain in place. Rupture of the boiler or of a gage shall be considered a failure.

(g) *Thermal*—(1), *General.* The normal operation of a toy includes performance in normal use and after being subjected to reasonably foreseeable damage or abuse likely to produce the

[4] Copies may be obtained from: American National Standards Institute, 1430 Broadway, New York, NY 10018.

highest temperatures or, in the case of motor-operated toys, the load that most closely approximates the severest conditions of normal use or reasonably foreseeable damage or abuse.

(2) *Classification.* Parts or surfaces of a toy are classified according to their use or function as follows (for the purposes of paragraph (g)(2)(v), (vi), and (vii) of this section, accessibility shall be defined as the ability to reach a heated surface with a ¼-inch-diameter rod 3 inches long):

(i) *Type A.* A part or surface of a toy (such as a handle) likely to be grasped by the hand or fingers for the purpose of carrying the toy or lifting a separable lid.

(ii) *Type B.* A part or surface of a toy that is (*a*) part of a handle, knob, or similar component, as in Type A (described in paragraph (g)(2)(i) of this section), but which is not normally grasped or contacted by the hand or fingers for carrying (including parts of a handle within seven-sixteenths of an inch of the surface to which the handle is attached and parts of a finger knob within ¼ inch of the surface to which the knob is attached, if the remainder of the knob is large enough to be grasped), or (*b*) a handle, knob, or part that may be touched but which need not be grasped for carrying the toy or lifting a lid, door, or cover (e.g., support part of a handle or knob).

(iii) *Type C.* A part or surface of a toy that can be touched by casual contact or that can be touched without employing the aid of a common household tool (screwdriver, pliers, or other similar household tool) and that is either (*a*) a surface that performs an intended heating function (e.g., the soleplate of a flatiron, a cooking surface, or a heating element surface), or (*b*) a material heated by the element and intended to be used as the product of the toy, excluding pans, dishes, or other containers used to hold the material to be cooked or baked if a common utensil or other device is supplied with the toy and specific instructions are established for using such a device to remove the container from the heated area.

(iv) *Type C marked.* A Type C surface which has been marked with a precautionary statement of thermal hazards in accordance with § 1505.3(e)(2).

(v) *Type D.* An accessible part or surface of a toy other than Types A, B, C, or E (see paragraphs (g)(i), (ii), (iii) and (vii) of this paragraph).

(vi) *Type D marked.* A Type D surface which has been marked with a precautionary statement of thermal hazards in accordance with § 1505.3(e)(2).

(vii) *Type E.* A heated surface in an oven or other article that is inaccessible or protected by an electrical-thermal safety interlock. Such interlocks shall prohibit the operation of a heating device whenever such surfaces are accessible and shall not allow accessibility to such surfaces until the temperatures of those surfaces have been reduced to levels below those established for Type D surfaces (paragraph (g)(2)(v) of this section).

(3) *Requirements.* When tested under the conditions described in paragraph (g)(4) of this section, a toy shall not attain a temperature at any point sufficiently high to constitute a fire hazard or to adversely affect any materials employed and shall not show a maximum temperature higher than those established by §§ 1505.7 and 1505.8. These maximum surface temperature requirements are not applicable to educational- or hobby-type products such as lead-casting sets and wood-burning tools which are appropriately labeled on the shelf pack or package as being intended only for children over 12 years of age provided that the maximum surface temperature of any such toy does not exceed that reasonably required to accomplish the intended technical effect. Such toys shall be provided with specific instructions and the warning statements required by and in accordance with § 1505.3 (d) and (e), and shall be appropriately identified as educational or hobby-type products.

(4) *Test conditions*—(i) *General.* Tests shall be conducted while the toy is connected to a circuit of 60-cycle-per-second (60 Hertz) current using the materials supplied with the toy or using materials otherwise intended to be used with the toy. Following such tests, the toy shall be energized for a 6-hour period to determine that no hazardous conditions would result from unattended use of the toy.

(ii) *Temperature.* Normally, tests shall be performed at an ambient (room) temperature of 25° C. (77° F.); however, a test may be conducted at any ambient temperature within the range of 21° to 30° C. (69.8° to 86° F.).

(iii) *Voltage.* The toy shall be tested at the voltage indicated in the manufacturer's rating or at 120 volts, whichever is greater.

(5) *Temperature measurements*—(i) *General.* Temperatures shall be measured by means of instruments utilizing thermocouples of No. 30 AWG (American Wire Gage) wire (either copper and constantan or iron and constantan) and potentiometer-type instruments that are accurate and are calibrated in accordance with current good laboratory practices. The thermocouple wire shall conform with the requirements for "special" thermocouples as listed in the table of limits of error of thermocouples (Table VIII) in "American Standard for Temperature Measurement Thermocouples, C96.1–1964,"[5] approved June 9, 1964, by American National Standards Institute, Inc. The Standard was sponsored and published by the Instrument Society of America.

(ii) *Test procedures.* The thermocouple junction and adjacent thermocouple lead wire shall be securely held in good thermal contact with the surface of the material whose temperature is being measured. In most cases, good thermal contact will result from securely taping or cementing the thermocouple in place. If a metal surface is involved, brazing or soldering the thermocouple to the metal may be necessary. The surface temperatures of a toy shall be measured with the toy operating in any unattended condition (e.g., with and without opening and closing doors or covers) for a sufficient period of time to allow temperatures to become constant, or, in the case of a toy with a thermostatically controlled heating element, for a sufficient period of time to determine the maximum surface temperature attained. A temperature shall be considered to be constant when three successive readings taken at 15-minute intervals indicate no change.

(iii) *Heating devices.* Toy ovens, casting toys, popcorn and candymakers, and other toys requiring the insertion of any materials or substances shall be additionally tested by feeding crumpled strips of newspaper and tissue paper into or onto the toy in place of the intended materials or substances. The test strips shall be conditioned for at least 48 hours in air at a temperature of 25°±4° C. (77°±7° F.) and a relative humidity of 50 percent ±5 percent. The test strips shall be 2 inches wide by 8 inches long before crumpling. The crumpled paper shall occupy not more than 25 percent of the accessible volume. The performance of the toy shall be considered unacceptable if flaming occurs within a 60-minute period following the attainment of normal operating temperatures. If a light bulb is used for heating purposes, the test shall be conducted using the largest wattage bulb that can be easily inserted into the socket.

(h) *Strain-relief test.* (1) The strain-relief means provided on the flexible power cord of a toy shall be capable of withstanding a direct pull of 35 pounds applied to the cord for 2 minutes without displacement of the strain-relief unit or a deformation of the anchoring surface that would produce a stress which would result in a potentially hazardous condition. A 35-pound weight shall be attached to the cord and supported by the toy in such a manner that the strain-relief means is stressed from any angle that the construction of the toy permits. The test shall be conducted with the electrical connection within the toy disconnected.

(2) The initial 2-minute test shall be conducted with the force vector parallel to the longitudinal axis of the cord and perpendicular to the anchoring surface of the strain-relief unit. Each test at other angles of stress shall be conducted for periods of 1 minute. The strain-relief means is not acceptable if, at the point of disconnection of the cord, there is any movement of the cord to indicate that stress would have resulted on the connections.

(3) Except for toys weighing more than 10 pounds, the strain-relief unit and its support base shall be designed and constructed in such a manner that

[5] Copies may be obtained from: Instrument Society of America, 530 William Penn Place, Pittsburgh, PA 15219.

no indication of stress would result which would produce a hazard when the cord is held firmly in place 3 feet from the strain-relief unit and the toy is dropped the 3 feet at any angle.

§ 1505.7 Maximum acceptable surface temperatures.

The maximum acceptable surface temperatures for electrically operated toys shall be as follows:

Surface type (as described in § 1505.6 (g)(2))	Thermal inertia type [1]	Temperatures	
		° C.	° F.
A	1	50	122
A	2	55	131
A	3	60	140
B	1	55	131
B	2	65	149
B	3	75	167
C (unmarked)	1	65	149
C (unmarked)	2	75	167
C (unmarked)	3	85	185
C (unmarked)	4	95	203
C marked	1	70	158
C marked	2	90	194
C marked	3	110	230
C marked	4	130	266
D (unmarked)	1	55	131
D (unmarked)	2	70	158
D (unmarked)	3	80	176
D (unmarked)	4	90	194
D marked	1	60	140
D marked	2	75	167
D marked	3	100	212
D marked	4	125	257
E	[2]	[2]	[2]

[1] Thermal inertia types are defined in terms of lambda as follows:

Type 1: Greater than 0.0045 (e.g., most metals).
Type 2: More than 0.0005 but not more than 0.0045 (e.g., glass).
Type 3: More than 0.0001 but not more than 0.0005 (e.g., most plastics).
Type 4: 0.0001 or less (e.g., future polymeric materials).
The thermal inertia of a material can be obtained by multiplying the thermal conductivity (cal./cm./sec./degrees C.) by the density (gm./cm.^{3}) by the specific heat (cal./gm./degrees C.).

[2] All types.
[3] No limit.

§ 1505.8 Maximum acceptable material temperatures.

The maximum acceptable material temperatures for electrically operated toys shall be as follows (Classes 105, 130, A, and B are from "Motors and Generators," Standard MG-1-1967 [6] published by the National Electrical Manufacturers Association):

Material	Degrees C.		Degrees F.	
Capacitors	(1)		(1)	
Class 105 insulation on windings or relays, solenoids, etc.:				
Thermocouple method[2]	90		194	
Resistance method	110		230	
Class 130 insulation system	110		230	
Insulation:				
Varnished-cloth insulation	85		185	
Fiber used as electrical insulation	90		194	
	Class A	Class B	Class A	Class B
Insulation on coil windings of a.c. motors (not including universal motors) and on vibrator coils:				
In open motors and on vibrator coils—thermocouple or resistance method[2]	100	120	212	248
In totally enclosed motors—thermocouple or resistance method[2]	105	125	221	257
Insulation on coil windings of d.c. motors and of universal motors:				
In open motors:				
Thermocouple method[2]	90	110	194	230
Resistance method	100	120	212	248
In totally enclosed motors:				
Thermocouple method[2]	95	115	203	239
Resistance method	105	125	221	257
Phenolic composition[3]		150	302	
Rubber- or thermoplastic-insulated wires and cords[3]		60	140	
Sealing compound	(4)		(5)	
Supporting surface while the toy is operating normally		90	194	
Wood and other similar combustible material		90	194	

[1] If the capacitor has no marked temperature limit, the maximum acceptable temperature will be assumed to be 65° C. (149° F.) for an electrolytic type and 90° C. (194° F.) for other than an electrolytic type.
[2] The temperature indicated refers to the hottest spot on the outside surface of the coil measured by the thermocouple method.
[3] The limitations on rubber- and thermoplastic-insulated wires and cords and on phenolic composition do not apply if the insulation or the phenolic has been investigated and found to have special heat-resistant properties, or if the insulation meets the thermal requirements.
[4] 40 less than melting point.
[5] 104 less than melting point.

Dated September 20, 1973.

SADYE E. DUNN,
Secretary, Consumer Product Safety Commission.

[FR Doc.73-20429 Filed 9-26-73;8:45 am]

[6] Copies may be obtained from: National Electrical Manufacturers Association, 155 East 44th Street, New York, NY 10017.

STATE OF MINNESOTA

COUNTY OF RAMSEY

BEFORE SHERRY CHENOWETH
DIRECTOR OF CONSUMER SERVICES
DEPARTMENT OF COMMERCE

In the matter of the Proposed Adoption of Rule of the State Consumer Services Section of the Department of Commerce Governing Procedures for Banning, Repurchasing and Testing of Toys, and Setting Standards for Certain Toys, Pursuant to the Safe Toys Act.

ORDER FOR HEARING

To effectively implement The Safe Toys Act, M.S. 1973, Sections 325.381 to 325.391, the Minnesota Director of the Consumer Services Section of the Department of Commerce, deems it necessary to consider adoption of the proposed rules captioned above pursuant to the authority vested in me by M.S. 1973, Section 325.383.

NOW, THEREFORE, IT IS ORDERED this 26th day of September 1973, that a public hearing on the proposed rules captioned above be held in the Department of Commerce Hearing Room, 5th Floor, Metro Square Building, 7th and Robert Streets, St. Paul, Minnesota 55101, October 30, 1973, commencing at 9:30 a.m., and continuing until all representatives of associations or other interested groups or persons have had an opportunity to be heard.

IT IS FURTHER ORDERED, that notice of said hearing be given to all representatives of associations or other interested groups or persons who have registered their names with the Secretary of State for that purpose and all persons who are presently members of the Minnesota Legislature.

STATE OF MINNESOTA
CONSUMER SERVICES SECTION
DEPARTMENT OF COMMERCE

SHERRY CHENOWETH
DIRECTOR OF CONSUMER SERVICES

STATE OF MINNESOTA

COUNTY OF RAMSEY

BEFORE SHERRY CHENOWETH
DIRECTOR OF CONSUMER SERVICES
DEPARTMENT OF COMMERCE

In the matter of Proposed Rules
Relating to Procedures for Banning,
Re-purchasing and Testing of Toys
and Setting Standards for Certain
Toys, Pursuant to the Safe Toys Act.

APPOINTMENT OF
HEARING OFFICER

Pursuant to the authority vested in me by M.S.A. Sec. 15.0412 and M.S.A. Sec. 15.06, I, Sherry Chenoweth, do hereby appoint George Beck as hearing officer for the abovetitled matter.

This appointment authorizes and empowers George Beck to conduct such public hearings as are necessary to give all persons, associations and groups interested in the matter of proposed rules relating to procedures for banning, re-purchasing, and testing of toys and setting standards for certain toys, pursuant to the Safe Toys Act.

For the sole purpose of compensation, George Beck is and shall be deemed an employee of the Department of Commerce. In all other respects he shall be independent of the Consumer Services and the Director of Consumer Services.

Dated: September 27, 1973

Sherry Chenoweth

SHERRY CHENOWETH
Director of Consumer Services
Department of Commerce

STATE OF MINNESOTA

COUNTY OF RAMSEY

BEFORE SHERRY CHENOWETH
DIRECTOR OF CONSUMER SERVICES
DEPARTMENT OF COMMERCE

In the Matter of the Proposed Adoption of Rules of the Consumer Services Section of the Department of Commerce Relating to the Safe Toys Act, Establishing Procedures for Banning, Repurchasing and Testing of Toys and Setting Standards for Certain Toys.

NOTICE OF HEARING

Notice is hereby given that a public hearing will be held pursuant to M.S. 1971, Section 15.0412, Subdivision 4, in the above entitled matter in the Department of Commerce Hearing Room, 5th Floor, Metro Square Building, 7th and Robert Streets, St. Paul, Minnesota 55101, October 30, 1973, commencing at 9:30 a.m., and continuing until all persons have had an opportunity to be heard concerning the proposed rules captioned above by submitting either oral or written data, statements or arguments. Statements or briefs may be submitted without appearing at the hearing.

Copies of the proposed rules are now available and may be obtained by writing to the Director of Consumer Services, 230 State Office Building, St. Paul, Minnesota 55155. Additional copies will be available at the door on the date of the hearing.

Dated September 27, 1973

STATE OF MINNESOTA

Sherry Chenoweth

SHERRY CHENOWETH
DIRECTOR OF CONSUMER SERVICES
DEPARTMENT OF COMMERCE

STATE OF MINNESOTA

COUNTY OF RAMSEY

BEFORE SHERRY CHENOWETH
DIRECTOR OF CONSUMER SERVICES
DEPARTMENT OF COMMERCE

In the matter of the Proposed Adoption of Rule of the State Consumer Services Section of the Department of Commerce Governing Procedures for Banning, Repurchasing and Testing of Toys, and Setting Standards for Certain Toys, Pursuant to the Safe Toys Act.

ORDER FOR HEARING

To effectively implement The Safe Toys Act, M.S. 1973, Sections 325.381 to 325.391, the Minnesota Director of the Consumer Services Section of the Department of Commerce, deems it necessary to consider adoption of the proposed rules captioned above pursuant to the authority vested in me by M.S. 1973, Section 325.383.

NOW, THEREFORE, IT IS ORDERED this 26th day of September 1973, that a public hearing on the proposed rules captioned above be held in the Department of Commerce Hearing Room, 5th Floor, Metro Square Building, 7th and Robert Streets, St. Paul, Minnesota 55101, October 30, 1973, commencing at 9:30 a.m., and continuing until all representatives of associations or other interested groups or persons have had an opportunity to be heard.

IT IS FURTHER ORDERED, that notice of said hearing be given to all representatives of associations or other interested groups or persons who have registered their names with the Secretary of State for that purpose and all persons who are presently members of the Minnesota Legislature.

STATE OF MINNESOTA
CONSUMER SERVICES SECTION
DEPARTMENT OF COMMERCE

SHERRY CHENOWETH
DIRECTOR OF CONSUMER SERVICES

STATE OF MINNESOTA

COUNTY OF RAMSEY

BEFORE SHERRY CHENOWETH
DIRECTOR OF CONSUMER SERVICES
DEPARTMENT OF COMMERCE

In the Matter of the Proposed Adoption of Rules of the Consumer Services Section of the Department of Commerce Relating to the Safe Toys Act, Establishing Procedures for Banning, Repurchasing and Testing of Toys and Setting Standards for Certain Toys.

NOTICE OF HEARING

Notice is hereby given that a public hearing will be held pursuant to M.S. 1971, Section 15.0412, Subdivision 4, in the above entitled matter in the Department of Commerce Hearing Room, 5th Floor, Metro Square Building, 7th and Robert Streets, St. Paul, Minnesota 55101, October 30, 1973, commencing at 9:30 a.m., and continuing until all persons have had an opportunity to be heard concerning the proposed rules captioned above by submitting either oral or written data, statements or arguments. Statements or briefs may be submitted without appearing at the hearing.

Copies of the proposed rules are now available and may be obtained by writing to the Director of Consumer Services, 230 State Office Building, St. Paul, Minnesota 55155. Additional copies will be available at the door on the date of the hearing.

Dated September 27, 1973

STATE OF MINNESOTA

Sherry Chenoweth

SHERRY CHENOWETH
DIRECTOR OF CONSUMER SERVICES
DEPARTMENT OF COMMERCE

Proposed

CHAPTER 3 (CS 101 - 130)

Safe Toys Act -- Administration

CS 101 Scope and Purpose: Regulations CS 101 to CS 200 are adopted pursuant to the Safe Toys Act, Laws 1973, Chapter 467, coded as Minnesota Statute 325.381 to 325.391 and are promulgated to assist consumers and businessmen in the interpretation of the statute.

CS 102 Definitions: As used in Chapters 3 & 4 of these Regulations:

(a) "Act" means the Safe Toys Act, Laws 1973, Chapter 467, coded as Minnesota Statutes 325.381 to 325.391.

(b) "Asphyxiation or suffocation" means a toy presents a hazard of asphyxiation or suffocation if in normal use and reasonably foreseeable damage or abuse, its design, manufacture or storage presents a risk of personal injury or illness from interference with normal breathing.

(c) "Child" means any person or persons less than 14 years of age.

(d) "Dealer" means any person that sells or distributes any toy to the general public.

(e) "Director" means the Director of the Consumer Services Section of the Department of Commerce.

(f) "Distributor" means any person that sells or distributes any toy at wholesale.

(g) "Electrical hazard" means a toy presents an electrical hazard if, in normal use or when subjected to reasonably foreseeable damage or abuse, its design or manufacture may cause personal injury or illness by shock or electrocution.

(h) "Flammable" means having a flash point up to 80 degrees Fahrenheit as determined by the Tagliabue Open Cup Tester. The flammability of solids and of the contents of self-pressurized containers shall be determined by methods generally recognized as applicable to the materials or containers and established by these regulations.

(i) "Importer" means any person that imports toys into the State for sale or distribution within the State.

(j) "Manufacturer" means any person that manufactures any toy for sale or distribution.

(k) "Mechanical hazard" means a toy presents a mechanical hazard if, in normal use or when subjected to reasonably

foreseeable damage or abuse, its design or manufacture presents an unreasonable risk of personal injury or illness:

(1) from fracture, fragmentation or disassembly of the toy;

(2) from propulsion of the toy or any part or accessory thereof;

(3) from points or other protusion, surfaces, edges, openings or closures;

(4) from moving parts;

(5) from lack or insufficiency of controls to reduce or stop motion;

(6) as a result of self-adhering characteristics of the toy;

(7) because the toy or any part or accessory thereof may be aspirated or ingested;

(8) because of instability;

(9) from stuffing material which is not free of dangerous or harmful substances;

(10) because of any other aspect of the toy's design or manufacture.

(l) "Mouth toy" means any toy intended to be placed in or in contact with a child's mouth.

(m) "Person" means any individual, partnership, corporation or association.

(n) "Purchase price" means the amount of money paid to acquire a toy, excluding transportation and shipping charges, interest, finance or service charges and Minnesota Sales and Use Taxes.

(o) "Saline solution" means a 0.9N saline solution (52 grams of sodium chloride per liter of water) maintained at 95 to 105 degrees Fahrenheit during the test.

(p) "Soap solution" means a 0.15 percent pure soap and water solution maintained at 100 to 120 degrees Fahrenheit during the test.

(q) "Thermal hazard" means that a toy presents a "thermal hazard" if, in normal use and reasonably foreseeable damage or abuse, its design or manufacture presents an

unreasonable risk of personal injury or illness because of heat or from heated parts, substances or surfaces.

(r) "Toxic" means able to produce personal injury or illness to a person through ingestion, inhalation or absorption through any body surface and can apply to any substance other than a radioactive substance.

(s) "Toy" means any toy, game or other article designed, labeled, advertised or otherwise intended for use by children.

(t) "Tub toy" means any toy intended to be used in a bathtub, or intended to be used in a small wading pool up to 60 inches in diameter and up to 18 inches in depth, or that could reasonably be expected to be used in contact with water, soapy or otherwise.

CS 103 Adoption of the Federal Hazardous Substances Act by Reference:

(a) The following rules and regulations promulgated pursuant to the Federal Hazardous Substances Act and published in Part 191 of Title 21 of the Code of Federal Regulations are incorporated herein by reference and hereby made a part of these regulations.

(1) Part 191.9a: Banned toys and other banned articles intended for use by children.

(2) Part 191.17: Method for determining the sound pressure level produced by toy caps.

(3) Part 191.65a: Exemptions from classification as a banned toy or other banned article for use by children.

(4) Part 191b: Requirements for electrically-operated toys or other electrically-operated articles intended for use by children.

CS 104 Severability Clause: If any provision of Regulations CS 101 to CS 200 or the application thereof to any person or circumstances is held unconstitutional or invalid, the remainder of Regulations CS 101 to CS 200 and the application of such provision to other persons or circumstances shall not be affected thereby.

CS 105 Banned Toys List: The director may, from time to time, publish a list of those toys which fail to meet the standards required by the Act and the regulations adopted pursuant thereto. Such a list shall be for general informational purposes only and shall not constitute an exclusive listing of all toys distributed which are in violation of the Act.

CS 106 Banning & Seizure of Hazardous Toys:

(a) On the effective date of each regulation which sets standards for or which bans certain toys, all toys which are included in the regulation and which fail to meet any standards incorporated therein shall be banned from sale, offering for sale, importation, distribution or manufacture.

(b) If the director determines that an immediate danger exists to the public health and safety which is caused by a toy which presents an electrical, mechanical or thermal hazard or a toy which presents a hazard due to toxic or flammable properties or properties able to produce asphyxiation or suffocation, he may issue and cause to be served upon the manufacturer, importer or dealer an order banning the manufacture, importation, sale or distribution of such toy. The order shall be served by mail and shall be calculated to give reasonable notice of the time and place for a hearing thereon and shall state the reasons for the entry of the order. The hearing shall be held no later than 10 days after the issuance of the order, after which and within 10 days of the date of the hearing, the director shall issue a further order either vacating, modifying or continuing the order.

(c) The director shall apply to the district court to seize toys presenting hazards to the public when no other method to control the hazard exists.

CS 107 Repurchase Procedures:

(a) The procedures prescribed in this regulation shall apply to any toy banned pursuant to the Act, regardless of whether such toy was banned at the time of its sale.

(b) (1) In the case of a person who returns a banned toy which was sold at retail by a dealer, if the person who purchased it from the dealer returns it to him and provides proof of purchase price, that dealer shall refund the purchase price and shall reimburse the buyer for any reasonable and necessary transportation charges incurred in its return.

(2) In the case of a person who returns a banned toy which was sold at retail by a dealer, if the person who purchased it from the dealer returns it to him and does not provide proof of purchase price, the dealer shall refund the person the average purchase price charged for such toy during the 12-month period preceding the posting of public notice as required in these regulations. If the dealer is unable to establish the average purchase price

charged for such a toy, he shall refund the price he last paid for the toy.

(3) Any dealer who makes reimbursement pursuant to subparagraph (2) above shall, upon request from the director or his employee, furnish the director with any information and records used to determine the average price described in subparagraph (2). Such information and records shall be available for a period of 12 months.

(4) Refunds of sales and use taxes shall be governed by the State Statutes and the regulations of the Minnesota Department of Revenue relating to the sales and use tax.

(c) (1) A distributor who has sold a banned toy shall repurchase it from the person to whom he sold it and shall refund that person the price paid the distributor for that toy.

(2) If the distributor is repurchasing the banned toy from a dealer who has reimbursed the purchaser for reasonable and necessary transportation charges pursuant to the requirements of paragraph (b), the distributor shall reimburse that dealer for such charges.

(3) If the distributor requires the return of the toy in connection with the repurchase of it in accordance with this paragraph, the distributor shall reimburse any persons for any reasonable and necessary expenses incurred in returning the toy to the distributor.

(d) (1) A manufacturer or importer who has sold a banned toy shall repurchase it from the person to whom he sold it and shall refund that person the price paid the manufacturer for that toy.

(2) The manufacturer or importer shall reimburse a person to whom he sold a banned toy for any reasonable and necessary transportation charges and expenses paid by said persons pursuant to the requirements of paragraphs (b) and (c).

(3) If the manufacturer or importer requires the return of the toy in connection with his repurchase of it in accordance with this paragraph, he shall reimburse any persons to whom he sold it for any reasonable and necessary expenses incurred in returning the toy to the manufacturer or importer.

(e) The manufacturer or importer of a toy subject to repurchase shall immediately notify, in a manner prescribed

by the director, each distributor and other person to whom he sold the toy that the toy is a banned toy and is subject to repurchase under the Act. Such notice shall identify the toy involved, including model number or other distinguishing characteristics, set forth the nature of hazards associated with the use of the product, provide instructions for return or other disposition of the toy, and advise that any distributor or dealer who receives the notice is required to provide further notice as specified in the following paragraphs. A distributor, upon receiving such notice, shall, in the same manner, immediately notify, in a manner prescribed by the director, each distributor, dealer, and other person to whom he sold such a toy.

(f) (1) A dealer who sells or has sold a banned toy at a retail establishment shall, upon notification that such a product is a banned toy, immediately prepare and prominently display a list containing identification of the banned product including the model number or other distinguishing characteristics, the name and address of the manufacturer and the nature of the hazards associated with the use of the product. Each such banned toy shall be maintained on the list for a period of not less than 120 days from the date the dealer received such notification.

(2) The director may, at any time, require the manufacturer or importer to notify distributors and dealers that a product shall be maintained on said list for a longer period. In this case, the distributor shall so notify persons to whom he sold the banned toy and dealers shall so maintain said list.

(3) The list required by (1) above shall be considered prominently displayed if it is available for inspection at a convenient location in the retail establishment, to which the public has access without having to obtain the permission or assistance of a store employee, and if a sign posted in accordance with the provisions of paragraph (g) clearly indicates the location of the list.

(4) A dealer who displays a list of banned toys pursuant to the Federal Hazardous Substances Act or the Consumer Product Safety Act which list includes each article and all information required to be displayed pursuant to the Safe Toys Act shall have complied with this paragraph.

(g) A dealer who sells or has sold a banned toy at a retail establishment, upon receiving notification that such product is a banned toy, shall immediately prepare and prominently display a "Notice of Refund Procedures for

Banned Toys on Articles for Children" as follows. This notice shall be posted on each floor of each such establishment where items similar to the banned toy are displayed or sold. Each such notice, which shall be not less then 22 by 28 inches in size, shall be printed in a color contrasting with the background and shall be so displayed for a period of not less than 120 days from the date the dealer received the latest such notification, or a longer period if so ordered by the director.

NOTICE OF REFUND PROCEDURES FOR BANNED TOYS OR ARTICLES FOR CHILDREN.

IN ACCORDANCE WITH THE MINNESOTA SAFE TOYS ACT, THIS STORE HAS AVAILABLE A LIST OF TOYS AND OTHER CHILDREN'S ARTICLES THAT HAVE BEEN SOLD IN THIS STORE AND THAT HAVE RECENTLY BEEN BANNED BY THE MINNESOTA OFFICE OF CONSUMER SERVICES.

THIS LIST IS AVAILABLE FOR INSPECTION AT:
(describe location where available)

THE LIST CONTAINS IDENTIFICATION OF THE BANNED ARTICLE, THE NAME AND ADDRESS OF THE MANUFACTURER AND THE NATURE OF THE HAZARDS ASSOCIATED WITH THE ARTICLE.

THESE ARTICLES SHOULD NOT BE USED. IF YOU HAVE PROOF OF HOW MUCH YOU PAID FOR THE TOY, YOU CAN RETURN IT TO THE RETAILER WHO SOLD IT TO YOU AND RECEIVE A FULL REFUND OF THE PURCHASE PRICE AND ANY REASONABLE AND NECESSARY COSTS INCURRED IN RETURNING THE ARTICLE.

IF YOU DO NOT HAVE PROOF OF HOW MUCH YOU PAID FOR THE TOY, YOU MAY RETURN THE TOY TO THE RETAILER WHO SOLD IT TO YOU AND RECEIVE A PARTIAL REFUND OF THE PURCHASE PRICE AND ANY REASONABLE AND NECESSARY COSTS INCURRED IN RETURNING THE ARTICLE.

(h) Any notice posted by a dealer in compliance with the Federal Hazardous Substances Act or the Consumer Product Safety Act and which includes the same information required by the notice in paragraph (g) shall meet the requirements of paragraph (g).

(i) A dealer who sells or has sold a banned toy in other than a retail establishment, shall, upon notification that the product is a banned toy, publicize a clear and conspicuous "Notice of Banned Toy or Children's Article" as follows, in a manner reasonably calculated to reach as many purchasers of the banned product as possible.

NOTICE OF BANNED TOY OR CHILDREN'S ARTICLE

(Insert identification of banned product, including model number or other distinguishing characteristics and name and address of manufacturers)

THE MINNESOTA OFFICE OF CONSUMER SERVICES HAS BANNED THIS PRODUCT AS HAZARDOUS BECAUSE (insert nature of the hazards associated with the use of the product).

THIS PRODUCT SHOULD NOT BE USED. IF YOU HAVE PROOF OF HOW MUCH YOU PAID FOR THE TOY, RETURN THE BANNED PRODUCT TO THE RETAILER WHO SOLD IT TO YOU AND RECEIVE A FULL REFUND OF THE PURCHASE PRICE AND ANY REASONABLE AND NECESSARY COSTS INCURRED IN RETURNING THE PRODUCT.

IF YOU DO NOT HAVE PROOF OF HOW MUCH YOU PAID FOR THE TOY, YOU MAY RETURN THE TOY TO THE RETAILER WHO SOLD IT TO YOU AND RECEIVE A PARTIAL REFUND AND ANY REASONABLE AND NECESSARY COSTS INCURRED IN RETURNING THE ARTICLE.

(j) Any notice published by a dealer in compliance with the Federal Hazardous Substances Act or the Consumer Product Safety Act and which includes the same information required by the notice in paragraph (i) shall meet the requirements of paragraph (i).

(k) The notice provisions of paragraphs (g) and (i) are not mutually exclusive.

CS 108 Manufacturers Initiative: Where a manufacturer or importer discovers that a toy he is selling or has sold is in violation of these regulations, the manufacturer or importer shall initiate the same listing, notification and repurchase procedures as set out in CS 107 and shall notify the director of his action within 72 hours of discovering the violation.

CS 109 Normal Use and Abuse Test Application; In the event a toy is intended for use by members of both age groups described in CS 110 and CS 111, the toy shall be tested in accordance with CS 111 except that the impact test, described in CS 110, paragraph (c) shall be substituted for the impact test as described in CS 111, paragraph (c).

CS 110 Normal Use and Abuse Test: For toys intended for use by a child 18 months of age or younger.

(a) The procedures described in Sections (b) through (h) are designed to simulate and define "normal use and reasonably foreseeable damage and abuse" for toys intended for use by a child eighteen (18) months of age or younger. Any effect on a toy which results from these procedures will be deemed to be an effect produced by "normal use and reasonably foreseeable damage and abuse".

(b) Each of the test methods described in this regulation shall be applied to a previously untested sample except the tension test which shall be conducted with the test sample used in the torque test if no failure occurred during that test.

(c) Impact Test:

(1) Toys having a weight of less than three pounds shall be subject to this test.

(2) Impact Medium: The impact medium shall consist of a 0.125 inch nominal thickness of type IV vinyl-asbestos tile, as specified in Federal Specification SS-T-312A, over at least a 2.5 inch thickness of concrete. The impact area shall be at least three square feet.

(3) Testing Procedure: The toy shall be dropped ten times from a height of 4.5 feet. The toy shall be dropped in random orientation. After each drop the test sample shall be allowed to come to rest and examined and evaluated before continuing.

(d) Bite Test:

(1) Application: A toy (or component or any accessible portion thereof) that has an external dimension of 1¼ inches or less and a design configuration that would permit a child to insert a portion into the mouth in any orientation up to a biting thickness of 1¼ inches, for a penetration of at least one-fourth inch, shall be subject to this test.

(2) Test Equipment:

(i) Contact Mechanism: The contact mechanism shall be two metal strips each one-thirty-second-inch thick. The strips shall be circular or semi-circular in shape with a 1½-inch diameter and a one-half-inch height. The edges thereof shall be rounded to a radius of one-sixty-fourth inch. (See Figure 1.)

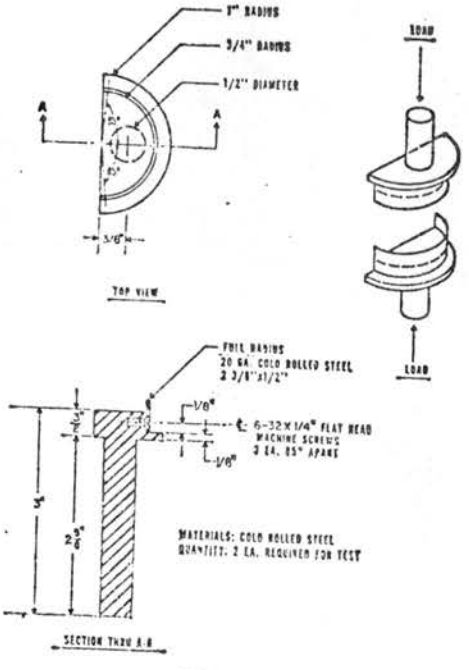

BITE TEST APPARATUS
Figure 1

(ii) Loading Device: The loading device shall consist of two metal plates capable to rigidly holding the contact mechanism (see subdivision (i) of this subparagraph and Figure 1) and applying a force of 100 pounds.

(3) Testing Procedure: The toy shall be placed in the loading device in any reasonable position utilizing not more than 180 degrees of the arc and a test load increasing to 25 pounds over 5 seconds shall be applied. This load shall be maintained for 10 seconds.

(e) Flexure Test:

(1) Application: Any toy that is intended to be bent or formed and that is equipped with metal wire(s) or other metal material(s) for stiffening or for retension of form shall be subject to this test. The test shall be applied to each component of the toy containing such metal wire(s) or other metal material(s).

(2) Testing Procedure: The toy shall be suitably secured in a vise equipped with vise shields of three-eighths inch inside radius. (See Figure 2.) The component shall then be bent through a 60-degree arc. The wire-containing component shall then be bent in the reverse direction through a 120-degree arc, and this process is repeated for 30 cycles. Two 120-degree arc bends shall constitute one cycle. The test shall be conducted at the rate of one-half cycle or 120 degrees per second with a 60-second rest period occurring after each 10 cycles.

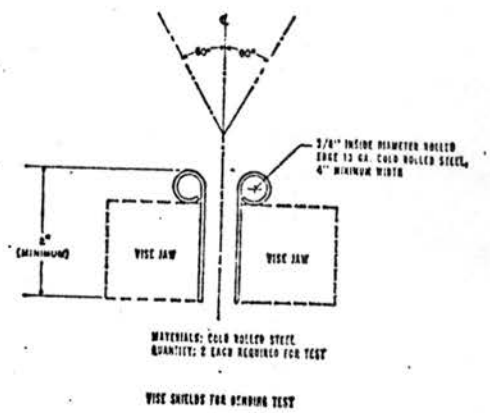

VISE SHIELDS FOR BENDING TEST

Figure 2

(f) Torque Test:

(1) Application:

(i) General: A toy with a projection part or assembly that the child can grasp by at least the thumb and forefinger shall be subject to this test.

(ii) Tub Toy: A tub toy shall be soaked for 30 minutes in soap solution and wiped free of excess moisture immediately prior to this test.

(iii) Mouth Toy: A mouth toy shall be soaked for 15 minutes in saline solution and wiped free of excess moisture immediately prior to this test.

(iv) Toys With Rotating Components: Projections, parts, or assemblies that are rigidly mounted on a rod or shaft designed to rotate shall be tested with the rod or shaft clamped to prevent rotation.

(2) Test Equipment:

(i) Loading Device: The loading device shall be a self-indicating torque gage (Chatillon TG 160 or equivalent) modified to accept the clamp specified in subdivision (ii) of this subparagraph. The gage shall be of sufficient capacity to apply a torque of four inch pounds.

(ii) Clamp: The clamp shall be capable of holding the test component firmly and transmitting a torsional force. (See Figure 3.)

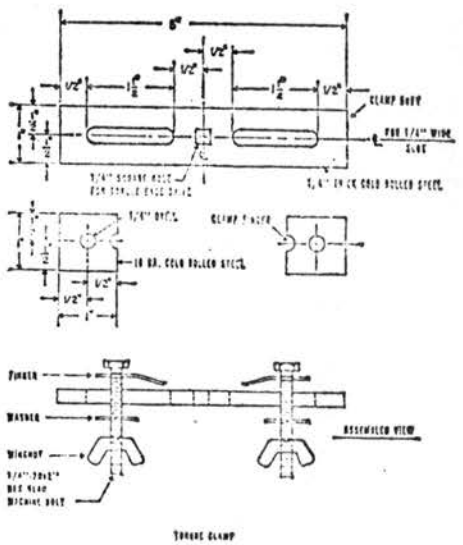

Figure 3

(3) Test Procedure: With the sample rigidly fastened in any reasonable test position, the clamp is fastened to the test object or component. A torque of two inch pounds shall be applied clockwise over a period of five seconds or until a rotation of 180 degrees from the original position has been attained. The torque or maximum rotation shall be maintained for an additional ten seconds. The torque shall then be removed and the test component permitted to return to an unstressed condition. This procedure shall then be repeated in a counter-clockwise direction.

(g) Tension Test:

(1) Application:

(i) General: Any projection of a toy that the child can grasp by at least the thumb and forefinger shall be subject to this test. This test is to be conducted on the toy after it has been subjected to the torque test described in paragraph (c) of this section.

(ii) Tub Toy: A tub toy shall be tested immediately after being subjected to the procedure described in paragraph (f) (1) (ii) of this section.

(iii) Mouth Toy: A mouth toy shall be tested immediately after being subjected to the procedure described in paragraph (f) (1) (iii) of this section.

(2) Test Equipment:

(i) Clamps: The first clamp shall be similar in function to the claw hook described in the 1968 British Standard No. 3443, Page 12, published by British Standards Institution, London. (See Figure 4.) An adjustable hose clamp suitable for applying a tension load shall also be required (Wittek No. AN737 RM Type FBSS or equivalent.)

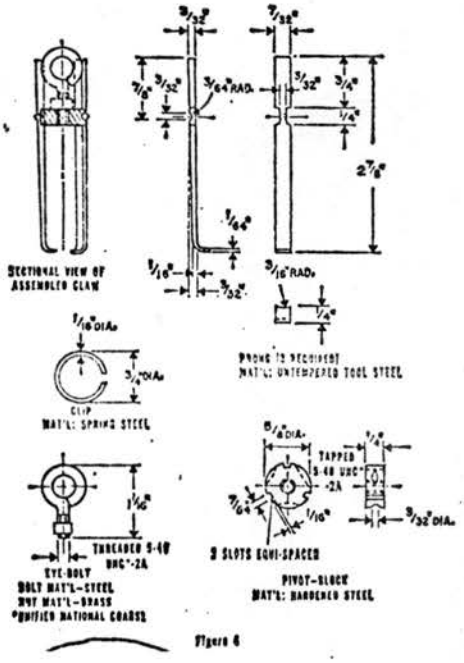

Figure 4

(ii) Loading Device: The loading device is to be a self-indicating gage scale (Chatillion No. 719-40 or equivalent modified to accept the clamp specified in subdivision (i) of this subparagraph. The spring scale shall be of sufficient capacity to apply a 15-pound load.

(3) Test Equipment:

(i) Clamps: The first clamp shall be similar in function to the claw hook described in the 1968 British Standard No. 3443, Page 12, published by British Standards Institution, London. (See Figure 4.) An adjustable hose clamp suitable for applying a tension load shall also be required (Wittek No. AN737 RM Type FBSS or equivalent.)

(ii) Loading Device: The loading device is to be a self-indicating gage scale (Chatillion No. 719-40 or equivalent modifed to accept the clamp specified in subdivision (i) of this subparagraph. The spring scale shall be of sufficient capacity to apply a 15-pound load.

(4) Test Procedure: With the test sample fastened in a convenient position, an appropriate clamp shall be attached to the test object or component. A 10-pound direct force shall be applied parallel to the major axis of the test component over a period of five seconds and then maintained for 10 seconds. The tension clamp shall then be removed and a second clamp appropriate for pulling at 90 degrees shall be attached to the test object or component. A 10-pound tensile force shall be applied perpendicular to the major axis of the test component over a period of five seconds and then maintained for ten seconds.

(h) Compression Test:

(1) Applications: Any area on the surface of a toy that is accessible to a child and inaccessible to flat-surface contact during the impact test shall be subject to this test.

(2) Test Apparatus: The loading device shall be a rigid metal disc of 1-1/8 inches in diameter and three-eighths inch in thickness. The perimeter of the disc shall be rounded to a radius of one-thirty-second inch to eliminate sharp edges. The disc shall be attached to the self-indicating gage scale (described in paragraph (g) (2) (ii) of this section) through a metal shaft.

(3) Test Procedure: The shaft shall be positioned so that it is generally perpendicular to the surface under test. A direct force increasing to 20 pounds over a period of

five seconds shall be applied through the disc. This load shall be maintained for ten seconds. During the test the toy is to rest on a flat, hard surface in any convenient position.

CS 111 Normal Use and Abuse Test: For toys intended for use by children from 18 months to 36 months of age.

(a) The procedures described in this regulation are designed to simulate and define "normal use and reasonably foreseeable damage and abuse" for children over 18 months but not over 36 months of age. Any effect on a toy or article which results from these procedures will be deemed to be an effect produced by "normal use and reasonably foreseeable damage and abuse."

(b) Each of the test methods described in this regulation shall be applied to a previously untested sample except the tension test which shall be conducted with the test sample used in the torque test if no failure occurred during that test.

(c) Impact Test:

(1) Application: Toys having a weight of less than four pounds shall be subject to this test.

(2) Impact Medium: The impact medium shall consist of a 0.125-inch nominal thickness of Type IV vinyl-asbestos tile, as specified in Federal Specification SS-T-312A, over at least a 2.5-inch thickness of concrete. The impact area shall be at least three square feet.

(3) Testing Procedure: The toy shall be dropped four times from a height of three feet. The toy shall be dropped in random orientation. After each drop the test sample shall be allowed to come to rest and examined and evaluated before continuing.

(d) Bite Test:

(1) Application: A toy (or component or any accessible portion thereof) that has an external dimension of 1¼ inches or less and a design configuration that would permit a child to insert a portion into the mouth in any orientation up to a biting thickness of 1¼ inches, for a penetration of at least one-fourth inch, shall be subject to this test.

(2) Test Equipment:

(i) Contact Mechanism: The contact mechanism shall be two metal strips each one-thirty-second of an inch thick. The strips shall be circular or semi-circular in shape with a 1½-inch diameter

and a one-half-inch height. The edges thereof shall be rounded to a radius of one-sixty-fourth of an inch. (See Figure 1 in CS 110.)

(ii) Loading Device: The loading device shall consist of two metal plates capable of rigidly holding the contact mechanism (see subdivision (i) of this subparagraph and Figure 1 in CS 110) and applying a force of 100 pounds.

(3) Testing Procedure: The toy shall be placed in the loading device in any reasonable position utilizing not more than 180 degrees of the arc and a test load increasing to 50 pounds over five seconds shall be applied. This load shall be maintained for ten seconds.

(e) Flexure Test:

(1) Application: Any toy that is intended to be bent, or formed and that is equipped with metal wire(s) or other metal materials(s) for stiffening or for retention of form shall be subject to this test. The test shall be applied to each component of the toy containing such metal wire(s) or other metal material(s).

(2) Testing Procedures: The toy shall be suitably secured in a vise equipped with vise shields of three-eighths of an inch inside radius. (See Figure 2 in CS 110.) The component shall then be bent through a 60-degree arc. The wire-containing component shall then be bent in the reverse direction through a 120-degree arc, and this process is repeated for thirty cycles. Two 120-degree arc bends shall constitute one cycle. The test shall be conducted at the rate of one-half cycle or 120-degrees per second with a 60-second rest period occurring after each ten cycles.

(f) Torque Test:

(1) Application:

(i) General: A toy with a projection, part, or assembly that the child can grasp by at least the thumb and forefinger shall be subject to this test.

(ii) Tub Toy: A tub toy shall be soaked for thirty minutes in soap solution and wiped free of excess moisture immediately prior to this test.

(iii) Mouth Toy: A mouth toy shall be soaked for fifteen minutes in saline solution and wiped

free of excess moisture immediately prior to this test.

(iv) Toys With Rotating Components: Projection, parts, or assemblies that are rigidly mounted on a rod or shaft designed to rotate shall be tested with the rod or shaft clamped to prevent rotation.

(2) Test Equipment:

(i) Loading Device: The loading device shall be a self-indicating torque gage (Chatillon TG 160 or equivalent) modified to accept the clamp specified in subdivision (ii) of this subparagraph. The gage shall be of sufficient capacity to apply a torque of four inch pounds.

(ii) Clamp: The clamps shall be capable of holding the test component firmly and transmitting a torsional force. (See Figure 3 in CS 110.)

(3) Test Procedure: With the sample rigidly fastened in any reasonably test position, the clamp is fastened to the test object or component. A torque of three inch pounds shall be applied clockwise over a period of five seconds or until a rotation of 180 degrees from the original position has been attacined. The torque or maximum rotation shall be maintained for an additional ten seconds. The torque shall then be removed and the test component permitted to return to an unstressed condition. This procedure shall then be repeated in a counter-clockwise direction.

(g) Tension Test:

(1) Application:

(i) General: Any projection of a toy that the child can grasp by at least the thumb and forefinger shall be subject to this test. This test is to be conducted on the toy after it has been subjected to the torque test described in paragraph (f) of this section.

(ii) Tub Toy: A tub toy shall be tested immediately after being subjected to the procedure described in paragraph (f) (1) (ii) of this section.

(iii) Mouth Toy: A mouth toy shall be tested immediately after being subjected to the procedure described in paragraph (f) (1) (iii) of this section.

(2) Test Equipment:

(i) Clamps: The first clamp shall be similar in function to the claw hook described in the 1968 British Standard No. 3443, Page 12, published by British Standards Institution, London. (See Figure 4 in CS 110.) An adjustable hose clamp suitable for applying a tension load shall also be required (Wittek No. AN 737 RM Type FBSS or equivalent.

(ii) Loading Device: The loading device is to be a self-indicating gage scale (Chatillon No. 719-40 or equivalent) modified to accept the clamp specified in subdivision (i) of this subparagraph. The spring scale shall be of sufficient capacity to apply a fifteen pound load.

(3) Test Procedure: With the test sample fastened in a convenient position, an appropriate clamp shall be attached to the test object or component. A fifteen pound direct force shall be applied parallel to the major axis of the test component over a period of five seconds and then maintained for ten seconds. The tension clamp shall then be removed and a second clamp appropriate for pulling at 90 degrees shall be attached to the test object or component. A fifteen pound tensile force shall be applied perpendicular to the major axis of the test component over a period of five seconds and then maintained for ten seconds.

(h) Compression Test:

(1) Application: Any area on the surface of a toy that is accessible to a child and inaccessible to flat-surface contact during the impact test shall be subject to this test.

(2) Test Apparatus: The loading device shall be a rigid metal disc 1-1/8 inches in diameter and three-eighth inch in thickness. The perimeter of a disc shall be rounded to a radius of one-thirty-second inch to eliminate sharp edges. The disc shall be attached to the self-indicating gage scale (described in paragraph (g) (2) (ii) of this section) through a metal shaft.

(3) Test Procedure: The shaft shall be positioned so that it is generally perpendicular to the surface under test. A direct force increasing to 25 pounds over a period of five seconds shall be applied through the disc. This load shall be maintained for ten seconds. During the test the toy is to rest on a flat, hard surface in any convenient position.

CS 112 (Reserved for future use)

CS 113 (Reserved for future use)

CS 114 (Reserved for future use)

CS 115 Testing of Toys:

(a) Each manufacturer of toys shall test all his toys currently being manufactured for sale or distribution within this state. The tests shall be conducted to ensure compliance with all applicable regulations and standards found in CS 101-200. Each manufacturer shall provide the results of these tests to any person who imports his toy into this state.

(b) Each manufacturer of toys shall test all his toys prior to introduction for sale or distribution in the State. The tests shall be conducted to ensure compliance with all applicable regulations and standards found in CS 101-200. Each manufacturer shall provide the results of these tests to any person who imports his toy into the State.

(c) A copy of all test results for each toy introduced for sale or distribution in the State shall be kept by each manufacturer and importer who manufactures or imports that toy. Such test results shall be presented to the director upon 72 hours notice from the director or his employee.

(d) Pursuant to an order issued to a manufacturer or importer the director may require that all test results be filed with his office prior to the introduction of any new toys into the State for distribution or sale by that manufacturer or importer.

(e) When a manufacturer or importer fails to comply with paragraphs (a) through (d), the director may issue and serve upon that manufacturer or importer an order banning the sale, offering for sale, importation, distribution, or manufacture of any toy for which test results are not available. The order shall be served by mail and shall be calculated to give reasonable notice of the time and place for a hearing thereon and shall state the reasons for the entry of the order.

TOYS CONTAINING GLASS

CS 131. A. No person, firm, corporation, association or agent or employee thereof shall import, manufacture, sell, hold for sale or distribute a toy or other article intended for use by children which contains glass, unless the glass is protected in such a way that no glass particle or edges will be accessible when a toy is subjected to normal use or reasonably foreseeable damage or abuse.

B. The provisions of section A shall not apply to non-toy glass articles used during the consumption of food or beverages, chemistry sets and other science education sets intended primarily for use by children, children's prescription eyewear, children's vacuum bottles, or light bulbs and similar illuminating devices that are components of toys.

TOY CHESTS AND SIMILAR ARTICLES

CS 132

A. No person, firm, corporation, association or agent or employee thereof shall import, manufacture, sell, hold for sale or distribute any toy chest or similar article intended for use by children which does not comply with the provisions of sections B through D of this regulation.

B. INSTRUCTIONS INCLUDED WITH NONASSEMBLED TOY CHESTS.

1. Toy chests and similar articles intended for use by children, unless they are sold completely assembled to the consumer, shall be accompanied by detailed instructions that include an assembly drawing, a list and description of all parts and tools required for assemble, and a full-size diagram of the required bolts and other fasteners.

2. The instructions shall be written so that an unskilled layman following the instructions can correctly assemble the article without making errors which would result in improper or unsafe assembly. The instructions shall include cautionary statements concerning tightening of bolts and other fasteners.

C. REQUIREMENTS FOR DESIGN AND CONSTRUCTION.

1. The article shall have no components which; a) have the potential for causing injury by shearing, scissoring, or pinching actions; b) have the potential for causing laceration or puncture-wound injury; c) have sharp or rough edges; d) are threaded hard

ware which protrude more than one diameter beyond the internally threaded fastener or structural member.

2. All wood parts and surfaces shall be smooth and free from splinters, splits, cracks, and similar defects.

3. No attachments (including, but not limited to, built-in toys, decorations, and design components), and no part thereof which will become accessible when subjected to normal use or reasonably foreseeable damage or abuse, shall have laceration or puncture injury potential.

4. If the article or a component thereof has a continuous enclosed volume greater than 1.1 cubic feet and a smaller internal dimension of 6 inches or more, it must comply with the following:

a. The article or component shall have no positive latching device.

b. Any vertically opening door or lid which is self-closing due to the article's design and which weighs more than 3 pounds shall be counter-balanced and require a force of less than 1½ pounds for opening as measured at the point or dege opposite the hinge(s).

c. The article shall be ventilated through at least two openings which together total at least 2 square inches in area. Each such opening shall be located either in the top surface and in the upper ¼ of at least one vertical surface, or in the upper ¼ of at least two vertical surfaces of the enclosure. The openings shall be at least 10 inches apart at their edges as measured across the

the surface(s). The article shall contain structural features which permit the passage of air when the ventilated surface is contiguous with a solid, flat surface such as a wall.

CHILDREN'S VACUUM BOTTLES

CS 133. A. No person, firm, corporation, association or agent or employee thereof shall import, manufacture, sell, hold for sale or distribute any vacuum bottle with a capacity of 16 ounces or less which is intended for use by children unless it is designed and constructed to pass the tests described in Section B.

1. IMPACT MEDIUM. The impact medium shall consist of a 0.125-inch nominal thickness of type IV vinyl-asbestos tile, as specified in Federal Specification SST-312A, over at least a 2.5-inch thickness of concrete. The impact area shall be at least 3 square feet.

2. TEST PROCEDURE. The test shall consist of dropping a fully assembled vacuum bottle, filled to the neck with water at 36 degrees to 40 degrees Fahrenheit, a maximum of four times from a height of 3 feet. The vacuum bottle shall be dropped in random orientation. After each drop, the test sample shall be allowed to come to rest and examined and evaluated before continuing. If the glass filler breaks on any of the first three drops, the test can be terminated on the particular drop on which the filler breaks. Accessibility of glass particles on or near the impact medium, or in the liquid when the test is completed, shall constitute failure. Accessibility of glass in the liquid shall be determined by opening the cap and emptying the contents.

Amendment published in Federal Register: * March 7, 1973; 38 F.R. 6138

Remove old page 4.3 and insert this new page in your reprint.

§ 191.9a Banned toys and other banned articles intended for use by children.

(a) *Toys and other children's articles presenting mechanical hazards.* Under the authority of section 2(f)(1)(D) of the act and pursuant to provisions of section 3(e) of the act, the Commissioner has determined that the following types of toys or other articles intended for use by children present a mechanical hazard within the meaning of section 2(s) of the act because in normal use or when subjected to reasonably foreseeable damage or abuse, the design or manufacture presents an unreasonable risk of personal injury or illness:

(1) Any toy rattle containing, either internally or externally, rigid wires, sharp protrusions, or loose small objects that have the potential for causing lacerations, puncture wound injury, aspiration, ingestion, or other injury.

(2) Any toy having noisemaking components or attachments capable of being dislodged by the operating features of the toy or capable of being deliberately removed by a child, which toy has the potential for causing laceration, puncture wound injury, aspiration, ingestion, or other injury.

(3) Any doll, stuffed animal, or other similar toy having internal or external components that have the potential for causing laceration, puncture wound injury, or other similar injury.

(4) Lawn darts and other similar sharp-pointed toys usually intended for outdoor use and having the potential for causing puncture wound injury.

(5) Caps (paper or plastic) intended for use with toy guns and toy guns not intended for use with caps if such caps when so used or such toy guns produce impulse-type sound at a peak pressure level at or above 138 decibels, referred to 0.0002 dyne per square centimeter, when measured in an anechoic chamber at a distance of 25 centimeters (or the distance at which the sound source ordinarily would be from the ear of the child using it if such distance is less than 25 centimeters) in any direction from the source of the sound. This subparagraph is an interim regulation pending further investigation to determine whether prevention of damage to the hearing of children requires revision of this regulation.

(6) Any article known as a "baby-bouncer," "walker-jumper," or "baby-walker" and any other similar article (referred to in this subparagraph as "article(s)") which is intended to support very young children while sitting, walking, bouncing jumping, and/or reclining, and which because of its design has any exposed parts capable of causing amputation, crushing, lacerations, fractures, hematomas, bruises, or other injuries to fingers, toes, or other parts of the anatomy of young children. Included among, but not limited to, the design features of such articles which classify the articles as banned hazardous substances are:

(i) The areas about the point on each side of the article where the frame components are joined together to form an "X" shape capable of producing a scissoring, shearing, or pinching effect.

(ii) Other areas where two or more parts are joined in such a manner as to permit a rotational movement capable of exerting a scissoring, shearing, or pinching effect.

(iii) Exposed coil springs which may expand sufficiently to allow an infant's finger, toe, or any other part of the anatomy to be inserted, in whole or in part, and injured by being caught between the coils of the spring or between the spring and another part of the article.

(iv) Holes in plates or tubes which provide the possibility of insertion, in whole or in part, of a finger, toe, or any part of the anatomy that could then be injured by the movement of another part of the article.

(v) Design and construction that permits accidental collapse while in use.

(7) Toys usually known as clacker balls and consisting of two balls of plastic or other material connected by a length of line or cord or similar connector (referred to as "cord" in § 191.65a(a)(5)), intended to be operated in a rhythmic manner by an upward and downward motion of the hand so that the two balls will meet forcefully at the top and bottom of two semicircles thus causing a "clacking" sound, which toys present a mechanical hazard because their design or manufacture presents an unreasonable risk of personal injury from fracture, fragmentations, or disassembly of the toy and from propulsion of the toy or its part(s).

* (b) *Electrically operated toys and other electrically operated children's articles presenting electrical, thermal, and/or certain mechanical hazards.* Under the authority of section 2(f)(1)(D) of the act and pursuant to provisions of section 3(e) of the act, the Commissioner has determined that the following types of electrically operated toys or other electrically operated articles intended for use by children present electrical, thermal, and/or certain mechanical hazards within the meaning of section 2 (r), (s), and/or (t) of the act because in normal use or when subjected to reasonably foreseeable damage or abuse, the design or manufacture may cause personal injury or illness by electric shock and/or presents an unreasonable risk of personal injury or illness because of heat as from heated parts, substances, or surfaces, or because of certain mechanical hazards:

(1) Any electrically operated toy or other electrically operated article intended for use by children (as defined in § 191b.1(a)(1)) that is introduced into interstate commerce and which does not comply with the requirements of Part 191b of this chapter. *

major axis for 5 seconds or until the sample ignites, whichever is less. Remove the candle. By means of a stopwatch, determine the time of combustion with self-sustained flame. Do not exceed 60 seconds. Extinguish flame with a CO_2 or similar nondestructive type extinguisher. Measure the dimensions of the burnt area and calculate the rate of burning along the major axis of the sample.

§ 191.15 Method for determining extremely flammable and flammable contents of self-pressurized containers.

(a) *Equipment required.* The test equipment consists of a base 8 inches wide, 2 feet long, marked in 6-inch intervals. A rule 2 feet long and marked in inches is supported horizontally on the side of the base and about 6 inches above it. A paraffin candle 1 inch or more in diameter, and of such height that the top third of the flame is at the height of the horizontal rule, is placed at the zero point in the base.

(b) *Procedure.* The test is conducted in a draft-free area that can be ventilated and cleared after each test. Place the self-pressurized container at a distance of 6 inches from the flame source. Spray for periods of 15 seconds to 20 seconds (one observer noting the extension of the flame and the other operating the container) through the top third of the flame and at a right angle to the flame. The height of the flame should be approximately 2 inches. Take three readings for each test, and average. As a precaution do not spray large quantities in a small, confined space. Free space of previously discharged material.

§ 191.16 Method for determining flashpoint of extremely flammable contents of self-pressurized containers.

The apparatus used is the Tagliabue Open-Cup Flashpoint Apparatus as described in § 191.13. Some means such as dry ice in an open container is used to chill the pressurized container. The container, the flash cup, and the bath solution of the apparatus (brine or glycol may be used) are chilled to a temperature of about 25° F. below zero. The chilled container is punctured to exhaust the propellant. The chilled formulation is transferred to the test apparatus and tested in accordance with the method described in § 191.13.

* **§ 191.17 Method for determining the sound pressure level produced by toy caps.**

(a) *Equipment required.* The equipment for the test includes a microphone, a preamplifier (if required), and an oscilloscope.

(1) The microphone-preamplifier system shall have a free-field response uniform to within ±2 decibels from 50 hertz to 70 kilohertz or beyond and a dynamic range covering the interval 70 to 160 decibels relative to 20 micronewtons per square meter. Depending on the model, the microphone shall be used at normal or at grazing incidence, whichever gives the most uniform free-field response. The microphone shall be calibrated both before and after the test of a model of cap. The calibration shall be accurate to within ±1 decibel. If the calibration is of the pressure type or of the piston-phone plus electrostatic actuator type, it shall be corrected to free-field conditions in accordance with the manufacturer's instructions.

(2) The oscilloscope shall be the storage type or one equipped with a camera. It shall have a response uniform to within ±1 decibel from 50 hertz to 250 kilohertz or higher. It shall be calibrated to within ±1 decibel against an external voltage source periodically during the tests.

(b) *Procedure.* (1) Use the type pistol that would ordinarily be used with the caps being tested. Place the pistol and testing equipment so that neither the pistol nor the microphone is closer than 1 meter from any wall, floor, ceiling, or other large obstruction. Locate the pistol and the microphone in the same horizontal plane with a distance of 25 centimeters between the diaphragm of the microphone and the position of the explosive. Measure the peak sound pressure level at each of the six designated orientations of the pistol with respect to the measuring microphone. The 0° orientation corresponds to the muzzle of the pistol pointing at the microphone. The 90°, 180°, and 270° orientations are measured in a clockwise direction when looking down on the pistol with its barrel

* horizontal, as illustrated by the following figure:

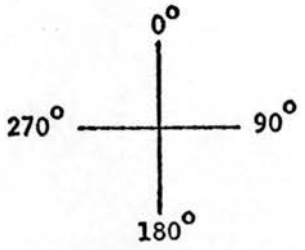

(2) The hammer and trigger orientations are obtained by rotating the pistol about the axis of the barrel, when the pistol is in the 90° or 270° orientation, so that the hammer and the trigger are each respectively closest to and in the same horizontal plane with the microphone.

(3) Fire 10 shots at each of the six orientations, obtaining readings on the oscilloscope of the maximum peak voltage for each shot. Average the results of the 10 firings for each of the six orientations.

(4) Using the orientation that yields the highest average value, convert the value to sound pressure levels in decibels relative to 20 micronewtons per square meter using the response to the calibrated measuring microphone. *

EXEMPTIONS

§ 191.61 Exemptions for food, drugs, cosmetics, and fuels.

(a) *Food, drugs, and cosmetics.* Substances subject to the Federal Food, Drug, and Cosmetic Act are exempted by section 2(f)(2) of the act; but where a food, drug, or cosmetic offers a substantial risk of injury or illness from any handling or use that is customary or usual it may be regarded as misbranded under the Federal Food, Drug, and Cosmetic Act because its label fails to reveal material facts with respect to consequences that may result from use of the article (21 U.S.C. 321(n)) when its label fails to bear information to alert the householder to this hazard.

(b) *Fuels.* A substance intended to be used as a fuel is exempt from the requirements of the act when in containers that are intended to be or are installed as part of the heating, cooling, or refrigeration system of a house. A portable container used for delivery or temporary or additional storage, and containing a substance that is a hazardous substance as defined in section 2(f) of the act, is not exempt from the labeling prescribed in section 2(p) of the act, even though it contains a fuel to be used in the heating, cooking, or refrigeration system of a house.

§ 191.62 Exemption from full labeling and other requirements.

(a) Any person who believes a particular hazardous substance intended or packaged in a form suitable for use in the household or by children should be exempted from full label compliance otherwise applicable under the act, because of the size of the package or because of the minor hazard presented by the substance, or for other good and sufficient reason, may submit to the Commissioner a request for exemption under section 3(c) of the act, presenting facts in support of the view that full compliance is impracticable or is not necessary for the protection of the public health. The Commissioner shall determine on the basis of the facts submitted and all other available information whether the requested exemption is consistent with adequate protection of the public health and safety. If he so finds, he shall detail the exemption granted and the reasons therefor by an appropriate order published in the FEDERAL REGISTER.

(b) The Commissioner may on his own initiative determine on the basis of facts available to him that a particular hazardous substance intended or packaged in a form suitable for use in the household or by children should be exempted from full labeling compliance otherwise applicable under the act because of the size of the package or because of the minor hazard presented by the substance or for other good and sufficient reason. If he so finds, he shall detail the exemption granted and the reasons therefor by an appropriate order in the FEDERAL REGISTER.

Amendment published in Federal Register:
* November 16, 1971; 36 F.R. 21809
* * November 19, 1971; 36 F.R. 22059

Remove old page 10.9 and insert this new page in your reprint.

***§ 191.65a Exemptions from classification as a banned toy or other banned article for use by children. ***

(a) The term "banned hazardous substance" as used in section 2(q)(1)(A) of the act shall not apply to the following articles:

(1) Toy rattles described in § 191.9a (a)(1) in which the rigid wires, sharp protrusions, or loose small objects are internal and provided that such rattles are constructed so that they will not break or deform to expose or release the contents either in normal use or when subjected to reasonably foreseeable damage or abuse.

(2) Dolls and stuffed animals and other similar toys described in § 191.9a (a)(3) in which the components that have the potential for causing laceration, puncture wound injury, or other similar injury are internal, provided such dolls, stuffed animals, and other similar toys are constructed so that they will not break or deform to expose such components either in normal use or when subjected to reasonably foreseeable damage or abuse.

(3) Lawn darts and similar sharp-pointed articles not intended for toy use and marketed solely as a game of skill for adults, provided such articles:

(i) Bear the following statement on the front of the panel of the carton and on any accompanying literature:

> WARNING: Not a toy for use by children. May cause serious or fatal injury. Read instructions carefully. Keep out of reach of children.

Such statement shall be printed in sharply contrasting color within a borderline and in letters at one-quarter inch high on the main panel of the container and at least one-eighth inch high on all accompanying literature.

(ii) Include in the instructions and rules clear and adequate directions and warnings for safe use including a warning against use when any person or animal is in the vicinity of the intended play or target area.

(iii) Are not sold by toy stores or store departments dealing predominantly in toys and other children's articles.

* (4) Any article known as a "baby-bouncer," "walker-jumper," or "baby-walker" and any other similar article (referred to in this subparagraph as "article(s)") described in § 191.9a(a)(6) provided:

(i) The frames are designed and constructed in a manner to prevent injury from any scissoring, shearing, or pinching when the members of the frame or other components rotate about a common axis or fastening point or otherwise move relative to one another; and

(ii) Any coil springs which expand when the article is subjected to a force that will extend the spring to its maximum distance so that a space between successive coils is greater than one-eighth inch (0.125 inch) are covered or otherwise designed to prevent injuries; and

(iii) All holes larger than one-eighth inch (0.125 inch) in diameter and slots, cracks, or hinged components in any portion of the article through which a child could insert, in whole or in part, a finger, toe, or any other part of the anatomy are guarded or otherwise designed to prevent injuries; and

(iv) The articles are designed and constructed to prevent accidental collapse while in use; and

(v) The articles are designed and constructed in a manner that eliminates from any portion of the article the possibility of presenting a mechanical hazard through pinching, bruising, lacerating, crushing, breaking, amputating, or otherwise injuring portions of the human body when in normal use or when subjected to reasonably foreseeable damage or abuse; and

(vi) Any article which is introduced into interstate commerce after the effective date of this subparagraph is labeled:

(*a*) With a conspicuous statement of the name and address of the manufacturer, packer, distributor, or seller; and

(*b*) With a code mark on the article itself and on the package containing the article or on the shipping container, in addition to the invoice(s) or shipping document(s), which code mark will permit future identification by the manufacturer of any given model (the manufacturer shall change the model number whenever the article undergoes a significant structural or design modification); and

(vii) The manufacturer or importer of the article shall make, keep, and maintain for 3 years records of sale, distribution, and results of inspections and tests conducted in accordance with this subparagraph and shall make such records available at all reasonble hours upon request by any officer or employee of the Food and Drug Administration, or any other officer or employee acting on behalf of the Secretary of Health, Education, and Welfare, and shall permit such officer or employee to inspect and copy such records, to make such stock inventories as he deems necessary, and to otherwise check the correctness of such records. *

** (5) Clacker balls described in § 191.9a (a)(7) that have been designed, manufactured, assembled, labeled, and tested in accordance with the following requirements, and when tested at the point of production or while in interstate commerce or while held for sale after shipment in interstate commerce do not exceed the failure rate requirements of the table in subdivision (vi) of this subparagraph: * *

Amendment published in Federal Register:
* March 7, 1973; 38 F.R. 6138

Insert this new page in your reprint.

***§ 191b.1 Definitions.**

(a) The following definitions apply to this Part 191b:

(1) The term "electrically operated toy or other electrically operated article intended for use by children" means any toy, game, or other article designed, labeled, advertised, or otherwise intended for use by children which is intended to be powered by electrical current from nominal 120 volt (110–125 v.) branch circuits. Such articles are referred to in this part in various contexts as "toy" or "electrically operated toy." If the package (including packing materials) of the toy or other article is intended to be used with the product, it is considered to be part of the toy or other article. This definition does not include components which are powered by circuits of 30 volts r.m.s. (42.4 volts peak) or less, or articles designed primarily for use by adults which may be used incidentally by children.

§ 191b.2 [Reserved] *

1/ Effective date. This order shall become effective on September 5, 1973.

Amendment published in Federal Register: * March 7, 1973; 38 F.R. 6138

Insert this new page in your reprint.

§ 191b.3 Labeling.

(a) *General.* Electrically operated toys, and the instruction sheets and outer packaging thereof, shall be labeled in accordance with the requirements of this section and any other applicable requirements of the Federal Hazardous Substances Act and regulations promulgated thereunder. All labeling shall be prominently and conspicuously displayed under customary conditions of purchase, storage, and use. All required information shall be readily visible, noticeable, clear, and, except where coding is permitted, shall be in legible English (other languages may also be included as appropriate). Such factors governing labeling as location, type size, and contrast against background may be based on necessary condensations to provide a reasonable display.

(b) *Specific items.* (1) The toy shall be marked in accordance with the provisions of paragraph (d) of this section to indicate:

(i) The electrical ratings required by paragraph (c) of this section.

(ii) Any precautionary statements required by paragraph (e) of this section.

(2) The shelf pack or package of the toy shall be labeled in accordance with the provisions of paragraph (d) of this section to indicate:

(i) The date (month and year) of manufacture (or appropriate codes).

(ii) The electrical ratings required by paragraph (c) of this section.

(iii) Any precautionary statements required by paragraph (e) of this section.

(3) Each toy shall be provided with adequate instructions that are easily understood by children of those ages for which the toy is intended. The instructions shall describe the applicable installation, assembly, use, cleaning, maintenance (including lubrication), and other functions as appropriate. Applicable precautions shall be included as well as the information required by paragraphs (b)(1) and (b)(2) of this section. The instructions shall also contain a statement addressed to parents recommending that the toy be periodically examined for potential hazards and that any potentially hazardous parts be repaired or replaced.

(4) If a toy is produced or assembled at more than one establishment, the toy and its shelf pack or package shall have a distinctive mark (which may be in code) identifying the toy as the product of a particular establishment.

(c) *Rating.* (1) A toy shall be marked to indicate its rating in volts and also in amperes and/or watts.

(2) If a toy utilizes a single motor as its only electric energy consuming component, the electrical rating may be marked on a motor nameplate and need not be marked elsewhere on the toy if the nameplate is readily visible after the motor has been installed in the toy.

(3) A toy shall be rated for alternating current only, direct current only, or both alternating and direct current.

(4) The alternating current rating shall include the frequency or frequency range requirement, if necessary because of a special component.

(d) *Markings.* (1) The markings required on the toy by paragraph (b) of this section shall be of a permanent nature, such as paint-stenciled, die-stamped, molded, or indelibly stamped. The markings shall not be permanently obliterable by spillage of any material intended for use with the toy and shall not be readily removable by cleaning with ordinary household cleaning substances. All markings on the toy and labeling of the shelf pack or package required by paragraph (b) of this section shall contrast sharply with the background (whether by color, projection, or indentation) and shall be readily visible and legible. Such markings and labeling shall appear in lettering of a height not less than that specified in paragraph (d)(2) of this section, except that those words shown in capital letters in paragraph (e) of this section shall appear in capital lettering of a height not less than twice that specified in paragraph (d)(2) of this section.

(2) Minimum lettering heights shall be as follows:

SURFACE AREA DISPLAYING MARKING, MINIMUM HEIGHT OF LETTERING

Square inches	*Inches*
Under 5	1/16
5 or more and under 25	1/8
25 or more and under 100	3/16
100 or more and under 400	1/4
400 or more	1/2

(e) *Precautionary statements*—(1) *General.* Electrically operated toys shall bear the statement: "CAUTION—ELECTRIC TOY." The shelf pack or package and the instructions of such toys shall bear the statement in the upper right-hand quarter of the principal display panel: "CAUTION—ELECTRIC TOY: Not recommended for children under ____ years of age. As with all electric products, precautions should be observed during handling and use to prevent electric shock." The blank in the preceding statement shall be filled in by the manufacturer, but in no instance shall the manufacturer indicate that the article is recommended for children under 8 years of age if it contains a heating element. In the case of other electrically operated products which may not be considered to be "toys" but are intended for use by children, the term "ELECTRICALLY OPERATED PRODUCT" may be substituted for the term "ELECTRIC TOY."

(2) *Thermal hazards.* (i) Toys having Type C or Type D surfaces (described in § 191b.6(g)(2)) which reach temperatures greater than those shown in paragraph (e)(2)(ii) of this section shall be defined as hot and shall be marked where readily noticeable when the hot surface is in view with the statement: "HOT—Do Not Touch." When the mark-

Amendment published in Federal Register:
* March 7, 1973; 38 F.R. 6138 1/

Insert this new page in your reprint.

securely mounted and shall be prevented from turning, unless the turning of such component is part of the design of the toy and produces no additional hazard such as reduced spacings below acceptable levels or stress on the connection. Friction between tight-fitting surfaces shall not be considered sufficient for preventing the turning of components. The proper use of a suitable lockwasher or a keyed and notched insert plus a suitable lockwasher for single-hole mountings shall be acceptable. Each toy shall be designed and constructed so that vibrations occurring during normal operation and after reasonably foreseeable damage or abuse will not affect it adversely. Brush caps shall be tightly threaded or otherwise designed to prevent loosening.

(3) *Structural integrity.* Heating elements shall be supported in a substantial and reliable manner and shall be structurally prevented from making contacts inside or outside of the toy which may produce shock hazards. The current-carrying component(s) of the heating element shall be enclosed, and the enclosure shall be designed or insulated to prevent the development of a shock or fire hazard that may result from element failure. A toy operating with a gas or liquid under pressure, such as an electrically operated steam engine, shall be tested with respect to its explosion hazard and shall be provided with a pressure relief device that will discharge in the safest possible direction; that is, avoiding direct human contact and avoiding the wetting of electrical contacts.

(e) *Insulating material.* (1) Material to be used for mounting uninsulated live electrical elements shall be generally accepted as suitable for the specific application, particularly with regard to electrical insulation (voltage breakdown) and good aging characteristics (no significant change in insulating characteristics over the expected lifetime of the toy).

(2) Material used to insulate a heating element from neighboring parts shall be suitable for the purpose. If plain asbestos in a glass braid is used to so insulate the heating element, it shall be tightly packed and totally enclosed by the braid, and the overall thickness, including the braid, shall not be less than one-sixteenth inch. Hard fiber may be used for electrically insulating bushings, washers, separators, and barriers, but is not sufficient as the sole support of uninsulated live metal parts.

(f) *Enclosures*—(1) *General.* Each toy shall have an enclosure constructed of protective material suitable for the particular application, for the express purpose of housing all electrical parts that may present a fire, shock, or other accident hazard under any conditions of normal use or reasonably foreseeable damage or abuse. Enclosures shall meet the performance requirements prescribed by § 191b.6(b).

(2) *Accessibility.* An enclosure containing a wire, splice, brush cap, connection, electrical component, or uninsulated live part or parts at a potential of more than 30 volts r.m.s. (42.4 volts peak) to any other part or to ground:

(i) Shall be sealed by welding, riveting, adhesive bonding, and/or by special screws or other fasteners not removable with a common household tool (screwdriver, pliers, or other similar household tool) used as intended; and

(ii) Shall have no opening permitting entry of a 0.010-inch-diameter music wire that could contact a live part. Cross-notch-head screws, spring clips, bent tabs, and similar fasteners shall not be considered suitable sealing devices for enclosures since they are easy to remove with common household tools. Bent tabs shall be acceptable if, due to metal thickness or other factors, they successfully resist forceful attempts to dislodge them with ordinary tools.

(3) *Nonapplication.* The requirements of this paragraph are not applicable to an insulating husk enclosure or equivalent that covers the electrodes of a replaceable incandescent lamp and its lampholder contacts. The primary function of an enclosure containing a lamp shall be to protect it from breakage during normal use or reasonably foreseeable damage or abuse.

(g) *Spacings.* The distance, through air or across the surface of an insulator, between uninsulated live metal parts and a metallic enclosure and between uninsulated live metal parts and all other metal parts shall be suitable for the specific application as determined by the dielectric strength requirements prescribed by § 191b.6(e)(2). Electrical insulating linings on barriers shall be held securely in place.

(h) *Special safety features*—(1) *Moving parts.* If the normal use of a toy involves accident hazards, suitable protection shall be provided for the reduction of such hazards to an acceptable minimum. For example, rotors, pulleys, belting, gearing, and other moving parts shall be enclosed or guarded to prevent accidental contact during normal use or when subjected to reasonably foreseeable damage or abuse. Such enclosure or guard shall not contain openings that permit entrance of a ¼-inch-diameter rod and present a hazardous condition.

(2) *Switch marking.* Any toy having one or more moving parts which perform an inherent function of the toy and which may cause personal injury shall have a switch that can deenergize the toy by a simple movement to a plainly marked "OFF" position. Momentary contact switches which are normally in the "OFF" position need not be so marked.

(3) *Electrically operated sewing machines.* Electrically operated toy sewing machines shall be designed and constructed to eliminate the possibility of a child's finger(s) being pierced by a needle. For the purpose of this subparagraph, a clearance of not more than five thirty-seconds of an inch below the point of the needle when in its uppermost position or below the presser foot, if provided, shall be considered satisfactory.

(4) *Pressure relief valves.* A pressurized enclosure shall have an automatic

1/ [illegible]

pressure relief device and shall be capable of withstanding hydrostatic pressure equal to at least five times the relief pressure.

(5) *Containers for heated materials.* Containers intended for holding molten compounds and hot liquids shall be designed and constructed to minimize accidental spillage. A pot or pan having a lip and one or more properly located pouring spouts and an adequately thermally insulated handle may provide satisfactory protection. Containers intended solely for baking need not be designed and constructed to minimize accidental spillage. Containers shall be of such material and construction that they will not deform or melt when subjected to the maximum operating temperature occurring during normal use or after reasonably foreseeable damage or abuse.

(6) *Water.* Electrically operated toys (such as toy irons) shall not be designed or manufactured to be used with water except for toy steam engines or other devices in which the electrical components are separate from the water reservoir and are completely contained in a sealed chamber. Toys requiring occasional or repeated cleaning with a wet cloth shall be constructed to prevent seepage of water into any electrically active area that may produce a hazardous condition.

§ 191b.5 Electrical design and construction.

(a) *Switches.* (1) Switches and other control devices of electrically operated toys shall be suitable for the application and shall have a rating not less than that of the load they control (see § 191b.6 (e)(5)(ii) regarding electrical switch overload). A switch that controls a replaceable incandescent lamp, electrode, or lampholder contact which is at a potential of more than 30 volts r.m.s. (42.4 volts peak) to any other part or to ground shall open both sides of the circuit and shall have a marked "OFF" position. A switch that may reasonably be expected to be subjected to temperatures higher than 50° C. (122° F.) shall be constructed of materials which are suitable for use at such temperatures.

(2) Switches shall be located and protected so that they are not subject to mechanical damage that would produce a hazard in normal use or from reasonably foreseeable damage or abuse (see § 191b.6(b)).

(b) *Lamps.* (1) A replaceable incandescent lamp having a voltage of more than 30 volts r.m.s. (42.4 volts peak) between any of its electrodes or lampholder contacts and any other part or ground shall be in an enclosure that has at least one door or cover permitting access to the lamp. Such door(s) or cover(s) of the enclosure shall be so designed and constructed that they cannot be opened manually or with a flat bladed screwdriver or pliers.

(2) With all access doors and covers closed, the lamp enclosure shall have no opening that will permit entry of a straight rod 6 inches long and one-fourth inch in diameter if such entry would present an electrical hazard. The lamp shall be located no less than one-half inch from any ¼-inch-diameter opening in the enclosure.

(3) A toy having one or more lampholders shall be designed and constructed so that no live parts other than the contacts of the lampholders are exposed to contact by persons removing or replacing lamps. The shells of all lampholders for incandescent lamps shall be at the same potential.

(4) If the potential between the contacts of a lampholder for a replaceable incandescent lamp and any other part or ground is greater than 30 volts r.m.s. (42.4 volts peak), the contacts shall be located in an insulating husk or equivalent.

(c) *Transformers.* Transformers that are integral parts of toys shall be of the 2-coil insulated type.

(d) *Automatic controls.* Automatic controls for temperature regulation shall have the necessary capacity and reliability for their particular application.

(e) *Power supply connections (cords and plugs).* (1) A toy shall be provided with a suitable means for attachment to the power supply circuit.

(2) A toy requiring a power cord shall have a flexible cord that is permanently attached to the toy.

(3) The perimeter of the face of the attachment-plug cap shall be not less than five-sixteenths of an inch from any point on either blade of the plug.

(4) The body of the attachment-plug cap shall decrease in cross section from the face but shall have an expansion of the body, after a suitable distance from the face, sufficient to provide an effective finger grip.

(5) A flexible electrical power cord provided on a toy shall be type SP-2 (as defined in the "National Electrical Code," Chapter 4, article 400, pages 184–194 (1971),[2] published by the National Fire Protection Association), or its equivalent, or a heavier general-use type, and shall be not less than 5 feet nor more than 10 feet in length when measured as the overall length of the attached cord outside the enclosure of the toy, including fittings, up to the face of the attachment-plug cap.

(6) A flexible cord and plug shall have a current-carrying capacity of not less than the ampere rating of the toy.

(7) Cords on toys which are intended to come in direct contact with water or other liquids during use shall be of a jacketed type. Cords on toys with which water or other liquids are to be indirectly used (such as for cooling a mold) shall be plastic covered.

---

[2] Copies may be obtained from: National Fire Protection Association, 60 Batterymarch Street, Boston, MA 02110.

1/ [illegible] order shall become [illegible]

Amendment published in Federal Register: March 7, 1973; 38 F.R.6138 1/

Insert this new page in your reprint.

(8) Transformers in which the primary coil connects directly to the branch circuit outlet shall not be subject to the requirements of paragraph (e) (2), (4), and (5) of this section.

(f) *Bushings.* (1) At the point where a power supply cord passes through an opening in a wall, barrier, or the overall enclosure of a toy, a suitable and substantial bushing, insulating bushing, or equivalent shall be reliably secured in place and shall have smooth surfaces and well-rounded edges against which the cord may bear.

(2) If a cord hole is in wood, porcelain, phenolic composition, or other suitable insulating material, the surface of the hole is acceptable without a bushing if the edges of the hole are smooth and well-rounded. Where a separate insulating bushing is required, a bushing made of ceramic material or a suitable molded composition is acceptable if its edges are smooth and well-rounded.

(3) In no instance shall a separate bushing of wood, rubber, or any of the hot-molded shellac-and-tar compositions be considered acceptable.

(g) *Wiring.* (1) The internal wiring of a toy shall consist of suitable insulated conductors having adequate mechanical strength, dielectric properties, and electrical capacity for the particular application.

(2) Wireways shall be smooth and entirely free of sharp edges, burrs, fins, and moving parts that may abrade conductor insulation. Each splice and connection shall be mechanically secure, shall provide adequate and reliable electrical contact, and shall be provided with insulation at least equivalent to that of the wire involved unless adequate spacing between the splice and all other metal parts is permanently assured.

(3) A wire connector for making a splice in a toy shall be a type that is applied by a tool and for which the application force of the tool is independent of the force applied by the operator.

(4) Soldered connections shall be made mechanically secure before soldering.

(5) Current-carrying parts shall be made of silver, copper, a copper alloy, or other electrically conductive material suitable for the particular application.

(h) *Strain relief.* (1) A means of strain relief shall be provided to prevent mechanical stress on a flexible cord from being transmitted to terminals, splices, or interior wiring.

(2) If suitable auxiliary insulation is provided under a clamp for mechanical protection, clamps of any material are acceptable for use on Type SP-2 (as defined in the "National Electrical Code," chapter 4, article 400, pages 184-194 (1971),[3] published by the National Fire Protection Association), or equivalent rubber-insulated cord. For heavier types of thermoplastic-insulated cord, clamps may be without auxiliary insulation unless the clamp may damage the cord insulation.

(3) A flexible cord shall be prevented from being pushed into the toy through the cord-entry hole if such displacement would result in a hazardous condition.

(4) A knot in the cord shall not be considered an acceptable means of strain relief, but a knot associated with a loop around a smooth, fixed structural component shall be considered acceptable.

(i) *Additional requirements.* Except for the electrodes of a replaceable incandescent lamp and its lampholder contacts, a potential of more than 30 volts r.m.s. (42.4 volts peak) shall not exist between any exposed live part in a toy and any other part or ground.

§ 191b.6 Performance.

(a) *General.* Electrically operated toys and components thereof shall be tested by the appropriate methods described in this section and shall pass the tests in such a manner as to provide the necessary assurance that normal use and reasonably foreseeable damage or abuse will not produce a hazard or a potentially hazardous condition. The toy shall be capable of passing all applicable tests with any door, cover, handle, operable part, or accessory placed in any normal position. A toy shall not present a fire, casualty, or shock hazard when operated continuously for 6 hours under conditions of normal use and reasonably foreseeable damage or abuse, including the most hazardous position in which the toy can be left.

(b) *Enclosurers.* For purposes of this section, the term "enclosure" means any surface or surrounding structure which prevents access to a real or potential hazard. An enclosure shall withstand impact, compression, and pressure tests (see paragraph (b) (1), (2), and (3) of this section) without developing any openings above those specified, reduction of electrical spacings below those specified, or other fire, casualty, or shock hazards, including the loosening or displacement of components but excluding breakage of a lamp. After completion of each test, the toy shall comply with the requirements of the dielectric strength test described in paragraph (e)(2) of this section and, upon visual examination, shall not evidence the development of any hazards. Rupture of a fuse shall be considered a test failure.

(1) *Impact test.* A toy weighing 10 pounds or less shall be dropped four times from a height of 3 feet onto a 2½ inch thick concrete slab covered with 0.125 inch nominal thickness vinyl tile. The impact area shall be at least 3 square feet. The test shall be conducted while the toy is energized and operating and with all dead metal of the toy that may be energized connected together electrically and grounded through a 3-ampere plug fuse. The toy shall be dropped in

[3] Copies may be obtained from: National Fire Protection Association, 60 Batterymarch Street, Boston, MA 02110.

1/ Effective date. This order shall become effective on September 4, 1973.

Amendment published in Federal Register:
* March 7, 1973; 38 F.R. 6138 //

Insert this new page in your reprint.

random orientation. After each drop the test sample shall be allowed to come to rest and examined and evaluated before continuing.

(2) *Compression test.* Any area on the surface of the enclosure that is accessible to a child and inaccessible to flat-surface contact during the impact test shall be subjected to a direct force of 20 pounds for 1 minute. The force shall be applied over a period of 5 seconds through the axis of a ½-inch-diameter metal rod having a flat end with the edge rounded to a radius of one thirty-second of an inch to eliminate sharp edges. The axis of the rod shall be perpendicular to the surface being tested. During the test the toy shall rest on a flat, hard surface in any test-convenient position.

(3) *Pressure test.* If any portion of the top of a toy has a flat surface measuring 24 square inches or more and a minor dimension of at least 3 inches, that surface shall be subjected to a direct vertical pressure increasing to 50 pounds over a period of 5 seconds and maintained for 1 minute. The force shall be applied through a steel ball 2 inches in diameter. During the test the toy shall be in an upright position on a flat, horizontal solid surface.

(c) *Handles and knobs*—(1) *General.* For the purposes of tests in this paragraph, the parts of a lifting handle on a toy that are within seven-sixteenths of an inch of the surface to which the handle is attached, or the parts of a lifting knob that are within one-fourth inch of the surface to which the knob is attached, are considered to be for support purposes, and the remainder of the handle or knob is considered to be generally functional in nature. A handle or knob shall withstand crushing and lifting tests (see paragraph (c) (2) and (3) of this section) without fracture of the handle or knob, development of an opening that may pinch the hand, or breakage of the means used to fasten the handle or knob in place.

(2) *Crushing test.* The functional portion of a handle or knob shall be subjected to a crushing force increasing to 20 pounds over a period of 5 seconds and maintained for 1 minute. The force shall be applied through two flat and parallel hardwood blocks, each at least 2½ inches thick and each having dimensions slightly exceeding those of the handle or knob being tested. The crushing force between the blocks shall be exerted in any direction perpendicular to the major axis of the handle or knob.

(3) *Lifting test.* The support portion of a handle or knob shall be subjected to a force equal to four times the weight of the object it is intended to support. The direction of the lifting force shall be as intended by the design of the toy and shall be applied through a ½-inch-wide strap through or around a handle or by fingers or the equivalent on a knob. The force shall be applied over a period of 5 seconds through the center of gravity of the toy and maintained for 1 minute.

(d) *Stability.* A toy shall not overturn while resting in an upright position on a flat surface inclined 15° from horizontal. No spillage of molten material or hot liquids from containers shall occur while the toy is operating in this position under normal conditions of use. During this test, casters, if any, shall be in the position most likely to result in tipping, but shall not be artificially held in one position to prevent a natural rotation to another position.

(e) *Electrical*—(1) *Power input.* The actual current flow in a toy without a heating element shall not exceed 110 percent of the rated value, and shall not exceed 5.5 amperes, at rated voltage. The power input to a toy with a heating element shall not exceed 105 percent of the rated value at rated voltage. The power input rating of a toy employing one or more incandescent lamps as the only power-consuming components shall be considered to be the total rated wattage of such lamps. The rated voltage shall be considered to be the mean value of a marked voltage range.

(2) *Dielectric strength.* (i) A toy shall be capable of withstanding without breakdown for 1 minute a 60-cycle-per-second (60 Hertz) essentially sinusoidal potential of 1,000 volts applied between live parts and any dead metal parts.

(ii) If a toy employs a low-voltage secondary winding (either in the form of a conventional transformer or as an insulated coil of a motor), the toy shall also be capable of withstanding without breakdown for 1 minute a sinusoidal test potential applied between the high-voltage and low-voltage windings. The test potential shall be applied at the rated frequency of the toy and shall have a value of 1,000 volts plus twice the rated voltage of the high-voltage winding. The test potential shall be supplied from a suitable capacity-testing transformer, the output voltage of which can be regulated. The waveform of the test voltage shall approximate a sine wave as closely as possible.

// [illegible]

(iii) The applied test potential shall be increased rapidly and uniformly from zero until the required test value is reached and shall be held at that value for 1 minute. Unless otherwise specified, the toy shall be at the maximum operating temperature reached in normal use prior to conducting the tests.

(iv) The dielectric strength requirements of this subparagraph may also be determined by subjecting the toy to a 60-cycle-per-second (60 Hertz) essentially sinusoidal potential of 1,200 volts for 1 second. If the dielectric strength is determined by this method, the toy need not be in a heated condition.

(3) *Leakage current and repeated dielectric withstand tests.* (i) Both before and after being conditioned, a toy intended to operate from a source exceeding 42.4 volts peak shall:

(*a*) Not have a leakage current exceeding 0.5 milliampere, except that during the interval beginning 5 seconds and terminating 10 minutes after the toy is first energized, the leakage current of toys with heating elements other than lamps shall not exceed 2.5 milliamperes; and

(*b*) Comply with the requirements of a repeated dielectric withstand test both with and without preheating.

(ii) All accessible parts of a toy shall be tested for leakage current. If an insulating material is used for the enclosure or part of the enclosure, the leakage current shall be measured using a metal foil with an area not exceeding 10 by 20 centimeters in contact with accessible surfaces of such insulating material. Where the accessible surface of insulating material is less than 10 by 20 centimeters, the metal foil shall be the same size as the surface. The metal foil shall be so applied that it will not affect the temperature of the toy. The accessible parts shall be tested individually, collectively, and from one part to another.

(iii) Following the initial leakage current test, the toy shall be cooled down or heated up to 32° C. (90° F.). The toy shall then be conditioned for 48 hours in air at a temperature of 32°±2° C. (89.6°±3.6° F.) and with a relative humidity of 90–95 percent. The specified relative humidity shall be maintained inside a closed compartment in which a saturated solution of potassium sulphate is kept in a suitable container. Leakage current measurements shall be made, as specified in paragraph (e)(3)(ii) of this section and before the toy is energized, while the toy is in the humidity compartment.

(iv) With the connections intended for the source of supply connected thereto and then connected to the ungrounded side of a power supply circuit having a voltage equal to 110 percent of the rated voltage of the toy, the leakage current through a noninductive 1,500-ohm resistor connected between the grounded side of the supply circuit and each dead metal part (accessible and inaccessible) shall, when stable, be measured in accordance with the test provisions established in ANSI Standard C 101.1–1971, "American National Standard for Leakage Current for Appliances," approved November 17, 1970,* published by American National Standards Institute.

The toy shall then be removed from the humidity chamber, energized, and tested again after attaining its normal operating temperature. From these measurements, a leakage current with no resistance shall be calculated and used to determine compliance.

(v) For a toy whose outer enclosure consists wholly or partly of insulating material, the term "dead metal part" means metal foil tightly wrapped around the exterior of the enclosure in a manner that covers, but does not enter into, any enclosure openings.

(4) *Motor operation.* (i) A motor provided as part of a toy shall be capable of driving its maximum normal load in the toy without introducing any potentially hazardous condition. The performance of the toy shall be considered unacceptable if, during the test, temperatures in excess of those specified in § 191b.7 for Type D surfaces are attained on any accessible surface. The performance of the toy shall also be considered unacceptable if the rise in temperature during the test causes melting, scorching, embrittlement, or other evidence of thermal damage to the insulating material used to prevent exposure of live metal parts.

(ii) A motor-operated toy shall be tested with the motor stalled if the construction of the toy is such that any person can touch moving parts associated with the motor from outside the toy. The

---

* Copies may be obtained from: American National Standards Institute, 1430 Broadway, New York, NY 10018.

performance of the toy shall be considered unacceptable if, during the test, temperatures higher than those specified in § 191b.8 are attained or if temperatures higher than those specified for Type C surfaces in § 191b.7 are attained on any accessible surface of the motor.

(5) *Overload*—(i) *Motor.* A motor-control switch that is a part of a toy shall be horsepower-rated to cover the load or shall be capable of performing acceptably when subjected to an overload test consisting of 50 cycles of operation by making and breaking the stalled-rotor current of the toy at maximum rated voltage. There shall be no electrical or mechanical failure nor any visible burning or pitting of the switch contacts as a result of this test.

(ii) *Switch.* To determine if a motor-control switch is capable of performing acceptably when subjected to overload conditions, the toy shall be connected to a grounded supply circuit of rated frequency and maximum rated voltage with the rotor of the motor locked into position. During the test, exposed dead metal parts of the toy shall be connected to ground through a 3-ampere plug fuse such that any single pole, current-rupturing device will be located in the ungrounded conductor of the supply circuit. If the toy is intended for use on direct current, or on direct current as well as alternating current, the exposed dead metal parts of the toy shall be so connected as to be positive with respect to a single pole, current-rupturing device. The switch shall be operated at a rate of not more than 10 cycles per minute. The performance of the toy shall be considered unacceptable if the fuse in the grounding connection is blown during the test.

(f) *Hydrokinetic*—(1) *General.* Electrically operated toy steam engines shall be capable of performing acceptably when subjected to the tests described in this paragraph.

(2) *Preliminary test.* The ultimate strength of the boiler assembly shall first be determined by applying a hydrostatic pressure to the boiler with all openings blocked (the pressure-relief valve, steam exhausts, and any whistle or other accessory shall be removed and the resulting openings sealed); however, a water or other type of gage shall be left in place. The hydrostatic pressure shall be applied slowly and the ultimate value which is attained shall be recorded.

(3) *Pressure-relief test.* A pressure gage shall be connected to the boiler assembly which shall then be operated normally. The pressure at which the pressure-relief valve functions shall be noted while the engine is shut off (if a shutoff valve is provided) and with the whistle, if any, turned off. The test shall be discontinued and shall be considered a failure if the observed pressure exceeds one-fifth the value attained in the preliminary test described in paragraph (f)(2) of this section.

(4) *Operating pressure test.* If the boiler is still intact and no failure has occurred, the pressure-relief valve shall then be rendered inoperable and all other valves (such as a whistle and exhaust from the assembly) shall be tightly closed. Operation shall be continued until the pressure becomes constant. This test shall be discontinued and shall be considered a failure if the observed pressure exceeds one-third the value attained in the preliminary test described in paragraph (f)(2) of this section. During this test, all valves, gaskets, joints, and similar components shall be sufficiently tightened to prevent leakage. Rupture of the boiler or of any other fittings supplied with the engine shall be considered a failure.

(5) *Hydrostatic test.* If there has been no failure, two previous untested toys shall withstand for 1 minute a hydrostatic pressure of 5 times the pressure at which the safety valve operated or 3 times the constant pressure observed with the pressure-relief valve inoperable, whichever is greater. During this test, all openings shall be blocked (the pressure-relief valve, steam exhaust from the assembly, and any whistle or other outlet); however, a water or other type of gage shall remain in place. Rupture of the boiler or of a gage shall be considered a failure.

(g) *Thermal*—(1) *General.* The normal operation of a toy includes performance in normal use and after being subjected to reasonably forseeable damage or abuse likely to produce the highest temperatures or, in the case of motor-operated toys, the load that most closely approximates the severest conditions of normal use or reasonably foreseeable damage or abuse.

(2) *Classification.* Parts or surfaces of a toy are classified according to their use or function as follows (for the purposes of paragraph (g)(2) (v), (vi), and (vii) of this section, accessibility shall be defined as the ability to reach a heated surface with a ¼-inch-diameter rod 3 inches long):

(i) *Type A.* A part or surface of a toy (such as a handle) likely to be grasped by the hand or fingers for the purpose of carrying the toy or lifting a separable lid.

(ii) *Type B.* A part or surface of a toy that is (*a*) part of a handle, knob, or similar component, as in Type A (described in subdivision (i) of this subparagraph), but which is not normally grasped or contacted by the hand or fingers for carrying (including parts of a handle within seven-sixteenths of an inch of the surface to which the handle is attached and parts of a finger knob within ¼ inch of the surface to which the knob is attached, if the remainder of the knob is large enough to be grasped), or (*b*) a handle, knob, or part that may be touched but which need not be grasped for carrying the toy or lifting a lid, door, or cover (e.g., support part of a handle or knob).

(iii) *Type C.* A part or surface of a toy that can be touched by casual contact or that can be touched without employing the aid of a common household tool (screwdriver, pliers, or other similar household tool) and that is either (*a*) a surface that performs an intended

Amendment published in Federal Register: * March 7, 1973; 38 F.R. 6138 //

Insert this new page in your reprint.

heating function (e.g., the soleplate of a flatiron, a cooking surface, or a heating element surface), or (*b*) a material heated by the element and intended to be used as the product of the toy, excluding pans, dishes, or other containers used to hold the material to be cooked or baked if a common utensil or other device is supplied with the toy and specific instructions are established for using such a device to remove the container from the heated area.

(iv) *Type C marked.* A Type C surface which has been marked with a precautionary statement of thermal hazards in accordance with § 191b.3(e)(2).

(v) *Type D.* An accessible part or surface of a toy other than Types A, B, C, or E (see subdivisions (i), (ii), (iii), and (vii) of this subparagraph).

(vi) *Type D marked.* A Type D surface which has been marked with a precautionary statement of thermal hazards in accordance with § 191b.3(e)(2).

(vii) *Type E.* A heated surface in an oven or other article that is inaccessible or protected by an electrical-thermal safety interlock. Such interlocks shall prohibit the operation of a heating device whenever such surfaces are accessible and shall not allow accessibility to such surfaces until the temperatures of those surfaces have been reduced to levels below those established for Type D surfaces (paragraph (g)(2)(v) of this section).

(3) *Requirements.* When tested under the conditions described in paragraph (g)(4) of this section, a toy shall not attain a temperature at any point sufficiently high to constitute a fire hazard or to adversely affect any materials employed and shall not show a maximum temperature higher than those established by §§ 191b.7 and 191b.8. These maximum surface temperature requirements are not applicable to educational- or hobby-type products such as lead-casting sets and wood-burning tools which are appropriately labeled on the shelf pack or package as being intended only for children over 12 years of age provided that the maximum surface temperature of any such toy does not exceed that reasonably required to accomplish the intended technical effect. Such toys shall be provided with specific instructions and the warning statements required by and in accordance with § 191b.3 (d) and (e), and shall be appropriately identified as educational or hobby-type products.

(4) *Test conditions*—(i) *General.* Tests shall be conducted while the toy is connected to a circuit of 60-cycle-per-second (60 Hertz) current using the materials supplied with the toy or using materials otherwise intended to be used with the toy. Following such tests, the toy shall be energized for a 6-hour period to determine that no hazardous conditions would result from unattended use of the toy.

(ii) *Temperature.* Normally, tests shall be performed at an ambient (room) temperature of 25° C. (77° F.); however, a test may be conducted at any ambient temperature within the range of 21° to 30° C. (69.8° to 86° F.).

(iii) *Voltage.* The toy shall be tested at the voltage indicated in the manufacturer's rating or at 120 volts, whichever is greater.

(5) *Temperature measurements*—(i) *General.* Temperatures shall be measured by means of instruments utilizing thermocouples of No. 30 AWG (American Wire Gage) wire (either copper and constantan or iron and constantan) and potentiometer-type instruments that are accurate and are calibrated in accordance with current good laboratory practices. The thermocouple wire shall conform with the requirements for "special" thermocouples as listed in the table of limits of error of thermocouples (Table VIII) in "American Standard for Temperature Measurement Thermocouples, C96.1-1964,"[5] approved June 9, 1964, by American National Standards Institute, Inc. The Standard was sponsored and published by the Instrument Society of America.

(ii) *Test procedures.* The thermocouple junction and adjacent thermocouple lead wire shall be securely held in good thermal contact with the surface of the material whose temperature is being measured. In most cases, good thermal contact will result from securely taping or cementing the thermocouple in place. If a metal surface is involved, brazing or soldering the thermocouple to the metal may be necessary. The surface temperatures of a toy shall be measured with the toy operating in any unattended condition (e.g., with and without opening and closing doors or covers) for a sufficient period of time to allow temperatures to become constant, or, in the case of a toy with a thermostatically controlled heating element, for a sufficient period of time to determine the maximum surface temperature attained. A temperature shall be considered to be constant when three successive readings taken at 15-minute intervals indicate no change.

(iii) *Heating devices.* Toy ovens, casting toys, popcorn and candymakers, and other toys requiring the insertion of any materials or substances shall be additionally tested by feeding crumpled strips of newspaper and tissue paper into or onto the toy in place of the intended materials or substances. The test strips shall be conditioned for at least 48 hours in air at a temperature of 25°±4° C. (77°±7° F.) and a relative humidity of 50 percent ±5 percent. The test strips shall be 2 inches wide by 8 inches long before crumpling. The crumpled paper shall occupy not more than 25 percent of the accessible volume. The performance of the toy shall be considered unacceptable if flaming occurs within a 60-minute period following the attainment of normal operating temperatures. If a light bulb is used for heating purposes, the test shall be conducted using the largest wattage bulb

[5] Copies may be obtained from: Instrument Society of America, 530 William Penn Place, Pittsburgh, PA 15219.

Amendment published in Federal Register:
* March 7, 1973; 38 F.R. 6138 /

Insert this new page in your reprint.

* that can be easily inserted into the socket.

(h) *Strain-relief test.* (1) The strain-relief means provided on the flexible power cord of a toy shall be capable of withstanding a direct pull of 35 pounds applied to the cord for 2 minutes without displacement of the strain-relief unit or a deformation of the anchoring surface that would produce a stress which would result in a potentially hazardous condition. A 35-pound weight shall be attached to the cord and supported by the toy in such a manner that the strain-relief means is stressed from any angle that the construction of the toy permits. The test shall be conducted with the electrical connection within the toy disconnected.

(2) The initial 2-minute test shall be conducted with the force vector parallel to the longitudinal axis of the cord and perpendicular to the anchoring surface of the strain-relief unit. Each test at other angles of stress shall be conducted for periods of 1 minute. The strain-relief means is not acceptable if, at the point of disconnection of the cord, there is any movement of the cord to indicate that stress would have resulted on the connections.

(3) Except for toys weighing more than 10 pounds, the strain-relief unit and its support base shall be designed and constructed in such a manner that no indication of stress would result which would produce a hazard when the cord is held firmly in place 3 feet from the strain-relief unit and the toy is dropped the 3 feet at any angle.

§ 191b.7 Maximum acceptable surface temperatures.

The maximum acceptable surface temperatures for electrically operated toys shall be as follows:

Surface type (as described in § 191b.6(g)(2))	Thermal inertia type [1]	Temperatures	
		Degrees C.	Degrees F.
A	1	50	122
A	2	55	131
A	3	60	140
B	1	55	131
B	2	65	149
B	3	75	167
C (unmarked)	1	65	149
C (unmarked)	2	75	167
C (unmarked)	3	85	185
C (unmarked)	4	95	203
C marked	1	70	158
C marked	2	90	194
C marked	3	110	230
C marked	4	130	266
D (unmarked)	1	55	131
D (unmarked)	2	70	158
D (unmarked)	3	80	176
D (unmarked)	4	90	194
D marked	1	60	140
D marked	2	75	167
D marked	3	100	212
D marked	4	125	257
E	[2]	[2]	[2]

[1] Thermal inertia types are defined in terms of lambda as follows:
Type 1: Greater than 0.0045 (e.g., most metals).
Type 2: More than 0.0005 but not more than 0.0045 (e.g., glass).
Type 3: More than 0.0001 but not more than 0.0005 (e.g., most plastics).
Type 4: 0.0001 or less (e.g., future polymeric materials).
The thermal inertia of a material can be obtained by multiplying the thermal conductivity (cal./cm./sec./degrees C.) by the density (gm./cm.^{3}) by the specific heat (cal./gm./degrees C.).
[2] All types.
[3] No limit.

*

// Effective date. This order shall become effective [illegible], 1973.

Amendment published in Federal Register: * March 7, 1973; 38 F.R.6138 /

Insert this new page in your reprint.

§ 191b.8 Maximum acceptable material temperatures.

The maximum acceptable material temperatures for electrically operated toys shall be as follows (Classes 105, 130, A, and B are from "Motors and Generators," Standard MG-1-1967 [6] published by the National Electrical Manufacturers Association):

Material	Degrees C.		Degrees F.	
Capacitors	(1)		(1)	
Class 105 insulation on windings or relays, solenoids, etc.:				
Thermocouple method [2]	90		194	
Resistance method	110		230	
Class 130 insulation system	110		230	
Insulation:				
Varnished-cloth insulation	85		185	
Fiber used as electrical insulation	90		194	
	Class A	Class B	Class A	Class B
Insulation on coil windings of a.c. motors (not including universal motors) and on vibrator coils:				
In open motors and on vibrator coils—thermocouple or resistance method [2]	100	120	212	248
In totally enclosed motors—thermocouple or resistance method [2]	105	125	221	257
Insulation on coil windings of d.c. motors and of universal motors:				
In open motors:				
Thermocouple method [2]	90	110	194	230
Resistance method	100	120	212	248
In totally enclosed motors:				
Thermocouple method [2]	95	115	203	239
Resistance method	105	125	221	257
Phenolic composition [3]		150	302	[3]
Rubber- or thermoplastic-insulated wires and cords [3]		60	140	[3]
Sealing compound	(4)		(5)	[3]
Supporting surface while the toy is operating normally		90	194	[3]
Wood and other similar combustible material		90	194	

[1] If the capacitor has no marked temperature limit, the maximum acceptable temperature will be assumed to be 65° C. (149° F.) for an electrolytic type and 90° C. (194° F.) for other than an electrolytic type.

[2] The temperature indicated refers to the hottest spot on the outside surface of the coil measured by the thermocouple method.

[3] The limitations on rubber- and thermoplastic-insulated wires and cords and on phenolic composition do not apply if the insulation or the phenolic has been investigated and found to have special heat-resistant properties, or if the insulation meets the thermal requirements.

[4] 40 less than melting point.

[5] 104 less than melting point.

[6] Copies may be obtained from: National Electrical Manufacturers Association, 155 East 44th Street, New York, NY 10017.

State's Exhibit 4 .v.D.

STATE OF MINNESOTA

COUNTY OF RAMSEY

CERTIFICATE

In the Matter of the Proposed Adoption of Rules of the Consumer Services Section, Department of Commerce, Governing Procedures for Banning, Re-purchasing and Testing of Toys and Setting Standards for Certain Toys, Pursuant to the Safe Toys Act.

I hereby certify that the 285 labels which constitute the complete list of persons, associations, and other interested groups who as of 3:30 o'clock P.M., this 26th day of September 1973, have requested pursuant to M.S. 1971, Sec. 15.0421, that their names be placed on file with the Secretary of State for the purpose of receiving notice of public hearing on proposed rules on the subject captioned above.

Secretary of State

Arlen I. Erdahl

By Ceil Dion

STATE OF MINNESOTA

COUNTY OF RAMSEY

AFFIDAVIT

Kenneth A. Knudson, being duly sworn on oath deposes and says:

1) That he is an employee of the Consumer Services Section of the State of Minnesota.

2) That on the 26th day of September, 1973, he went to the Secretary of State's Office for the State of Minnesota and requested a current list of all representatives of associations or other interested groups or persons who had registered their names with the Secretary of State for the purpose of obtaining notices of public hearings relating to the promulgation of rules pursuant to M.S. 15.0412.

3) That on the 26th day of September, 1973, in response to the above request, the Secretary of State provided him with 285 mailing labels.

Further affiant sayeth not.

Kenneth A. Knudson

Subscribed and sworn to
before me this 28th
day of September
1973.

Notary Public, Thomas B. Sedgwick

_____ County, Minnesota
My Commission expires _____.

THOMAS B. SEDGWICK
NOTARY PUBLIC - MINNESOTA
HENNEPIN COUNTY
Commission Expires June 16, 1978

State's Exhibit 3 p.1

STATE OF MINNESOTA)
) ss.
COUNTY OF RAMSEY)

I, Betty Donicht, being first duly sworn, hereby deposes and says:

That at the City of Saint Paul, county and state aforementioned, on the 28th day of September, 1973, she served the attached Notice of Hearing in the matter relating to Contested Case Procedures for Consumer Services Section, Dept. of Commerce, State of Minnesota. by depositing in the United States Mail at said City of Saint Paul, a true and correct copy thereof, properly enveloped, with firstclass postage prepaid, and addressed to:

List of names and addresses supplied to me by Kenneth A. Knudson, Consumer Services Section, State of Minnesota, plus the Secretary of State's list of legislators run off by the Addressograph Department, State of Minnesota.

Betty L. Donicht

Subscribed and sworn to before me this 28th day of September, 1973.

Notary Public, Ramsey County, Minn.
My commission expires Feb. 27, 1980

STATE OF MINNESOTA

COUNTY OF RAMSEY

BEFORE SHERRY CHENOWETH
DIRECTOR OF CONSUMER SERVICES
DEPARTMENT OF COMMERCE

In the matter of Proposed Rules
Relating to Procedures for Banning,
Re-purchasing and Testing of Toys
and Setting Standards for Certain
Toys, Pursuant to the Safe Toys Act.

APPOINTMENT OF
HEARING OFFICER

Pursuant to the authority vested in me by M.S.A. Sec. 15.0412 and M.S.A. Sec. 15.06, I, Sherry Chenoweth, do hereby appoint George Beck as hearing officer for the abovetitled matter.

This appointment authorizes and empowers George Beck to conduct such public hearings as are necessary to give all persons, associations and groups interested in the matter of proposed rules relating to procedures for banning, re-purchasing, and testing of toys and setting standards for certain toys, pursuant to the Safe Toys Act.

For the sole purpose of compensation, George Beck is and shall be deemed an employee of the Department of Commerce. In all other respects he shall be independent of the Consumer Services and the Director of Consumer Services.

Dated: September 27, 1973

Sherry Chenoweth

SHERRY CHENOWETH
Director of Consumer Services
Department of Commerce

STATE OF MINNESOTA

COUNTY OF RAMSEY

BEFORE SHERRY CHENOWETH
DIRECTOR OF CONSUMER SERVICES
DEPARTMENT OF COMMERCE

In the matter of Proposed Rules
Relating to Procedures for Banning,
Re-purchasing and Testing of Toys
and Setting Standards for Certain
Toys, Pursuant to the Safe Toys Act.

STATEMENT OF NEED

The above captioned rules are not amendments to existing rules of the Consumer Services Section of the Department of Commerce.

The Minnesota Safe Toys Act., Minnesota Statutes 325.381 to 325.391, reflects the concern and desire of the Legislature that the public, especially the young, be protected form unreasonable risk of injury due to hazardous toys or other articles intended for use by children and that such hazardous articles be removed from commerce in the most expeditious manner possible. The act grants to the Director of Consumer Services broad powers to regulate the manufacturer, distribution and sale of these unsafe articles.

Such powers include the banning of unsafe toys and other articles; the requiring of testing of such articles to insure their freedom from unreasonable risks of injury; and the seizure of hazardous articles when it is deemed necessary to protect the public health and safety. The act also sets out general procedures for the removal of hazardous articles from the homes of consumers and from the marketplace.

These regulations, now proposed for formal adoption, are needed in order to establish detailed procedures for the banning, repurchasing, and testing of toys, and set detailed safety standards for certain toys. The procedure for the banning of hazardous toys establishes the manner in which the Director of Consumer Services may act. If a toy fails to meet minimum safety standards or specific safety standards, the Director may ban its sale in Minnesota. When a toy is declared banned, specific repurchase procedures are needed to induce the return of the hazardous items and to protect both consumers and businessmen from unnecessary financial loss. The testing of toys is needed to keep hazardous toys from being introduced for sale or distribution in Minnesota. Specific standards for certain toys are necessary to insure a minimum safety

standard for toys which present unreasonable safety hazards.

Finally, there is a need to provide a procedure for immediate action when an article, not covered by a specific standard, presents an imminent danger to the public health and safety.

These regulations, proposed for adoption, will act as an aid to consumers and businessmen, in the interpretation of the Minnesota Safe Toys Act.

Harry Ainsworth
DIRECTOR OF CONSUMER SERVICES
DEPARTMENT OF COMMERCE

STATE OF MINNESOTA

COUNTY OF RAMSEY

BEFORE SHERRY CHENOWETH
DIRECTOR OF CONSUMER SERVICES
DEPARTMENT OF COMMERCE

In the Matter of the Proposed Adoption of Rules of the State Consumer Services Section of the Department of Commerce Governing Procedures for Banning, Repurchasing and Testing of Toys, and Setting Standards for Certain Toys, Pursuant to the Safe Toys Act.

FINDINGS OF FACT

The above-entitled matter came on for hearing before the Director of the Consumer Services Section of the Department of Commerce of the State of Minnesota on the 30th day of October, 1973 at 9:30 a.m. in the Department of Commerce Hearing Room, Fifth Floor, Metro Square Building, 7th and Robert Streets, St. Paul, Minnesota after proper notice required by M. S. 1971, Section 15.0412 was served upon all persons, associations and other interested groups registered with the Secretary of State for that purpose.

After affording interested persons an opportunity to present written and oral data, statements and arguments, having heard all of the testimony, having considered all of the evidence adduced and upon the records, files and proceedings herein, I find the following:

(1) That Minnesota Statutes 1973, Sections 325.381 to 325.391, restricts the manufacture, sale, and other traffic within this State of hazardous toys and other articles intended for use by children, and grants regulatory, investigatory and

enforcement powers to the Director of the Consumer Services Section, Department of Commerce, and provides for the testing of such articles;

(2) That Minnesota Statutes 1973, Section 325.383 provides that the Director of Consumer Services shall adopt the regulations necessary to carry out the intent of the above-mentioned statute and that such regulations shall, insofar as practicable, conform to the regulations relating to this subject found as Part 191 in the Code of Federal Regulations, Title 21 (reissued September 3, 1973 in Title 16, Chapter II, Sub-chapter C, Code of Federal Regulations);

(3) That these proposed regulations are needed to effectively implement procedures for the banning, repurchasing and testing of toys, and set detailed safety standards for certain toys and to carry out the mandate of the above-mentioned statute.

STATE OF MINNESOTA
CONSUMER SERVICES SECTION
DEPARTMENT OF COMMERCE

Sherry Chenoweth

SHERRY CHENOWETH
DIRECTOR

STATE OF MINNESOTA

COUNTY OF RAMSEY

BEFORE SHERRY CHENOWETH
DIRECTOR OF CONSUMER SERVICES
DEPARTMENT OF COMMERCE

In the Matter of the Proposed Adoption of Rules of the State Consumer Services Section of the Department of Commerce Governing Procedures for Banning, Repurchasing and Testing of Toys, and Setting Standards for Certain Toys, Pursuant to the Safe Toys Act.

ORDER ADOPTING RULES

The above-entitled matter came on for hearing before the Director of the Consumer Services Section of the Department of Commerce of the State of Minnesota on the 30th day of October, 1973 at 9:30 a.m. in the Department of Commerce Hearing Room, Fifth Floor, Metro Square Building, 7th and Robert Streets, St. Paul, Minnesota after proper notice required by M.S. 1971, Section 15.0412 was served upon all persons, associations and other interested groups registered with the Secretary of State for that purpose.

After affording interested persons an opportunity to present written and oral data, statements and arguments, having heard all of the testimony, having considered all of the evidence adduced and upon the records, files and proceedings herein, and applicable statutory standards or criteria, and having confirmed the need for the above captioned rules.

NOW, THEREFORE, IT IS ORDERED that these rules identified as the Minnesota Safe Toys Act Regulations are adopted this 27th day of November, 1973, pursuant to authority vested in me by M.S. 1973, Section 325.383 and M.S. 1969, Section 45.021.

STATE OF MINNESOTA
CONSUMER SERVICES SECTION
DEPARTMENT OF COMMERCE

Sherry Chenoweth

SHERRY CHENOWETH
DIRECTOR

Edward J. Driscoll

EDWARD J. DRISCOLL
CHAIRMAN, DEPARTMENT OF COMMERCE

STATE OF MINNESOTA

COUNTY OF RAMSEY

In the Matter of the Proposed Adoption of Rules of the State Consumer Services Section of the Department of Commerce Governing Procedures for Banning, Repurchasing and Testing of Toys, and Setting Standards for Certain Toys, Pursuant to the Safe Toys Act.

STATEMENT OF COMPLIANCE WITH MANUAL OF RULE-MAKING PROCEDURES.

I, Special Assistant Attorney General John Arlandson, do hereby declare that I have examined the proposed rules and all related documents and that, based on them and my personal familiarity with the applicable procedures, the Manual of Rule Making Procedures has been followed. Any exceptions are noted below.

John R. Arlandson
Special Assistant Attorney General

Dated November 27, 1973.