

Minnesota Attorney General: Administrative Rules Proceedings

Copyright Notice:

This material may be protected by copyright law (U.S. Code, Title 17). Researchers are liable for any infringement. For more information, visit www.mnhs.org/copyright.

Version 3
August 20, 2018

MINNESOTA STATE REGULATIONS

Notice of filing by the Commissioner of Administration

We have received on this date, stamped and filed 2 copies of Rules and Regulations pertaining to the Department of Administration Building Code
(Agency or Board)

Regulation No. MHD 123 SBC 8601 (amended)

Subject: Plastic Electrical

Department of Administration
Publication, Central Services Division
Documents Section
140 Centennial Office Building
St. Paul, Minnesota 55155
Telephone: (612) 296-2874

FILED
RICHARD L. BRUBACHER
Commissioner of Administration

OCT 28 1974 2:45 pm

BY Eda Staudenmaier
AUTH. SIGNATURE EJ

Stamped and filed with the Secretary of State 10-28-74

Rev. 9-72

The following amendments are adopted:

MHD 123(d)(8) (dd) Plastic 6A and 6B and fittings which shall be laid on a continuous granular bed. Reference ASTM D2321-72.

MHD 123(d)(9)(ff) Plastic 6A or 6B with corresponding fittings may be installed, except that no stack or hotizontal drain may exceed 35 feet in total length.

MHD 123(d)(10)(gg) Plastic 6A and 6B fittings.

MHD 123(d)(11)(hh) Plastic 6A and 6B with corresponding fittings may be installed except that no stack or horizontal vent may exceed 35 feet in total length.

SBC 8601 Electrical. Scope. All new electrical wiring, apparatus and equipment for electric light, heat and power shall comply with the regulations contained in the 1971 Edition of the National Electrical Code as approved by the American National Standards Institute (ANSI C1-1971) and Minnesota Statutes 326.243, and the State Building Code as promulgated by the Commissioner of Administration effective January 15, 1974, namely:

1.	U.B.C.[1]	Section 605 (circuit)
2.	U.B.C.[1]	Section 810 (fire alarms)
3.	S.B.C.[2]	Section 201 Amending Chapter 5 of U.B.C. Section 512 (G.F.I. Roof Access)
4.	S.B.C.	Section 201 Amending Section 810 of U.B.C. (fire alarms)
5.	S.B.C.	Section 201 Amending 909 of U.B.C. (fire alarms)
6.	U.B.C.	Section 909 (fire alarms)
7.	U.B.C.	Section 1302(b) (fire alarms)
8.	U.B.C.	Section 1310 (fire detection)
9.	U.B.C.	Section 1413 (fire warning system)
10.	U.B.C.	Section 1807(j) (standby power)
11.	U.B.C.	Section 3312 (exit signs and illumination)
12.	U.B.C.	Section 4303(a)6 (floor/ceiling system)
13.	U.B.C.	Section 4305(b) (floor/ceiling-roof/ceiling)
14.	S.B.C.	Section 8806-2(k) (standby power)

1. Uniform Building Code - 1973 Edition
2. State Building Code effective January 15, 1974

Delete UBC Sections 5101, 5102, 5103 and 5104, Elevators, Dumbwaiter, Escalators, Manlifts, Moving Walks, Hoists and Lifts.

APPROVED AS TO FORM AND LEGALITY
October 28 1974
WARREN SPANNAUS, ATTORNEY GENERAL
BY Michael B Miller
SPECIAL ASSISTANT ATTORNEY GENERAL

FILED
RICHARD L. BRUBACHER
Commissioner of Administration
OCT 28 1974 2:45 pm
BY Cela Staudenmaier
AUTH. SIGNATURE EJ

STATE OF MINNESOTA
DEPARTMENT OF STATE
FILED
OCT 28 1974 - 2:30 pm
Arlen I. Erdahl
Secretary of State

STATEMENT OF COMPLIANCE WITH

MANUAL OF RULE MAKING PROCEDURES

I, Special Assistant Attorney General J. Michael Miles, do hereby declare that I have examined the proposed rules and all related documents and that, based on them and my personal familiarity with the applicable procedures, the Manual of Rule Making Procedures has been followed. Any exceptions are noted below.

J. Michael Miles

SPECIAL ASSISTANT ATTORNEY GENERAL

DATED: 9/30/74

STATE OF MINNESOTA

COUNTY OF RAMSEY

BEFORE THE

COMMISSIONER OF ADMINISTRATION

In the matter of the Proposed Amendments to the Plumbing Code, Electrical Code and Mechanical Code of the Minnesota State Building Code

ORDER FOR HEARING

To effectively implement Minnesota Statute 1971, Section 16.86, the Commissioner of Administration deems it necessary to consider adoption of certain amendments to the State Building Code pursuant to the authority vested in the Commissioner by the Statute cited above.

NOW, THEREFORE, IT IS ORDERED this 8th day of May, 1974, that a Public Hearing on the proposed amendments be held in the State Office Building, Room 83, St. Paul, Minnesota, commencing June 24, 1974, at 8:01 a.m., and continuing until all local governmental units, representatives of associations and other interested groups or persons have had an opportunity to be heard.

IT IS FURTHER ORDERED, that notice of said hearing be given pursuant to the provisions of Minnesota Statute 1971, Section 15.0412, Subdivision 4, and to all representatives of associations or other interested groups or persons who have registered their names with the Secretary of State for that purpose and all persons who are presently members of the Minnesota Legislature.

STATE DEPARTMENT OF ADMINISTRATION

Richard L. Brubacher

Richard L. Brubacher
Commissioner of Administration

STATE OF MINNESOTA

COUNTY OF RAMSEY

BEFORE THE

COMMISSIONER OF ADMINISTRATION

In the matter of the Proposed Amendments to the Plumbing Code, Electrical Code and Mechanical Code of the Minnesota State Building Code

STATEMENT OF NEED

The above-captioned proposed rules are amendments to the existing State Building Code.

Pursuant to Minnesota Statute 1971, Section 16.86, the Commissioner of Administration is charged with the responsibility of applying the State Building Code to all local governmental units having building codes, with limited exceptions, and with the duty of amending the State Building Code from time to time to maintain the most modern code standards regarding the construction, addition to or alteration of buildings.

Further, the Commissioner of Administration may hold public hearings at such times as interested parties petition for amendments to the State Building Code. Pursuant to Minnesota Statute 1971, Section 15.0412, Subdivision 1 and 4, the Commissioner is empowered to promulgate reasonable substantive rules and may also amend rules as is deemed necessary upon a showing of need for the Amendment subsequent to a Public Hearing. Further, the Commissioner of Administration may hold Public Hearings at such times as interested parties petition for Amendments to the State Building Code. The above captioned Amendments that fall within the above mentioned conditions are deemed of sufficient importance to warrant consideration through the process of Public Hearing.

Richard J. Brubacher

STATE OF MINNESOTA

COUNTY OF RAMSEY

BEFORE THE

COMMISSIONER OF ADMINISTRATION

In the matter of the Proposed Amendments to the Plumbing Code, Electrical Code and Mechanical Code of the Minnesota State Building Code

NOTICE OF HEARING

Notice is hereby given that a public hearing will be held pursuant to Minn. Stat. 1971, Section 16.86, and Minn. Stat. 1971, Section 15.0412, Subdivision 4, regarding the above-entitled matter, in the State Office Building, Room 83, St. Paul, Minnesota, commencing at 8:01 a.m., June 24, 1974, and continuing until all local governmental units, all representatives of associations and other interested groups or persons have had an opportunity to be heard concerning adoption of the proposed rules captioned above by submitting either oral or written data, statements or arguments. Statements or briefs may be submitted without appearing at the hearing.

The order of proposed amendments will be heard as follows:

1. Plumbing Amendments
2. Electrical Amendments (SBC 8601)
3. Deletion of Chapter 51 of the 1973 Edition of the Uniform Building Code -- Elevators, Dumbwaiters, Escalators and Moving Walks
4. SBC - Appendix B - regulations relating to Fallout Shelters
5. Mechanical Amendments

A summary of the proposed amendments to the State Building Code may be reviewed in the office of Herbert W. Meyer, State Building Inspector, 408 Metro Square Building, St. Paul, Minnesota, 55101. The amendment materials will also be available at the door on the date of the hearing. Telephone inquiries regarding the amendments should be directed to 612-296-4639.

A copy of the procedural rules for the hearing is attached. Testimony or other evidence to be submitted for consideration should be pertinent to the matter at hand and may be presented either orally or in writing at the public hearing or by mailing a statement to Herbert W. Meyer, State Building Inspector, at the above-mentioned address within 20 days following the conclusion of the subject hearing. If the person submitting a statement cannot be present to read his statement at the time of the hearing, the statement will be entered into the record. For those wishing to submit written statement or exhibits, it is requested that at least three (3) copies of such statement, exhibit, or summary be furnished at the hearing. It is suggested that to save time and avoid duplication, those organizations or associations having common viewpoint or interest in these proceedings join together where possible and present a single statement in behalf of such interests.

MINNESOTA DEPARTMENT OF ADMINISTRATION

Dated: May 9, 1974

Richard L. Brubacher

Richard L. Brubacher
Commissioner of Administration

Proposed Amendments to the 1973 Minnesota Plumbing Code:

Page 22 MHD 123(d)(1) is amended as follows:

(aa) Allowance for Character of Soil, ~~and~~ Water, and Other Considerations. When selecting the material and size for water service pipe, tubing or fittings, due consideration shall be given to the action of the water on the interior of the pipe ~~and~~ action of the soil, fill or other material on the exterior of the pipe, dissimilar metal corrosion, and the method of thawing frozen water services utilized by the Administrative Authority for services that provide year around water supply. The material selected for use form those listed in MHD 123 (d)(2) for a specific service, therfore, must be approved by the Administrative Authority.

Page 23 MHD 123(d)(8) add the following:

(dd) Plastic 6A and 6B and fittings, except that the total developed length of the building drain and any building drain branch shall not exceed 35 feet, and shall be laid on a continuous granular bed. Reference ASTM D2321-72.

Page 24 MHD 123(d)(9) is amended as follows:

(ff) Plastic 6A or 6B with corresponding fittings may be installed, ~~exposed, or in frame partitions, or in tunnels and shafts; except that this material may not be laid underground or embedded in masonry or concrete, and~~ that no stack or horizontal drain exceed 35 feet in total developed length.

Page 24 MHD 123(d)(10) add the following:

(gg) Plastic 6A and 6B and fittings, except that the total developed length shall not exceed 35 feet.

Page 24 MHD 123(d)(11) is amended as follows:

(hh) Plastic 6A and 6B with corresponding fittings may be installed, ~~exposed, or in frame partitions, or in tunnels and shafts, except that this material may not be laid underground or embedded in masonry or concrete, and~~ that no stack or horizontal vent exceed 35 feet in total developed length.

Page 61 Table 131(a)(2)A after **** add the following:

TABLE 131 (a) (2)A

MAXIMUM LOADS FOR HORIZONTAL DRAINS IN FIXTURE UNITS

Diameter of Drain	Horizontal Fixture Branch*- ¼ in/ft.	Building Sewer, Building Drain and Building Drain Branches-from Stacks**** Slope			
		1/16 in/ft.	⅛ in/ft.	¼ in/ft.	½ in/ft.
(inches)	(f.u.)	(f.u.)	(f.u.)	(f.u.)	(f.u.)
1¼	1				
1½	3				
2	6			21	26
2½	12			24	31
3**	32***		36***	42***	50***
4	160		180	216	250
5	360		390	480	575
6	620		700	840	1,000
8	—	1,400	1,600	1,920	2,300
10	—	2,500	2,900	3,500	4,200
12	—	3,900	4,600	5,600	6,700
15	—	7,000	8,300	10,000	12,000

*Includes Horizontal Branches of the Building Drain.
**No water closet shall discharge into a drain less than 3 inch.
***Not over 2 Water Closets.

****Every building drain that receives the discharge of (3) or more water closets, shall not be less than 4 inches in diameter. All building sewers shall not be less than 4 inches in diameter.

Proposed Code Amendment

MINNESOTA BUILDING CODE DIVISION
DEPARTMENT OF ADMINISTRATION
408 Metro Square Building
ST. PAUL, MINNESOTA 55101
TELEPHONE 612/296-4639

DATE REC'D _____
DATE OF PUBLIC HRG. _____
DATE OF ADOPTION _____

Proponent Building Code Division Title _____

Address 408 Metro Square Bldg. City St. Paul State Minnesota Zip 55101

Proposed amendment to the State Building Code. Section 8601

(Check one)

☐ Change subsection to read as follows ☐ Delete subsection and sustitute as follows

☒ Add new subsection to read as follows ☐ Delete subsection without substitution

Insert here the specific code change, with the exact wording proposed. Present wording of the section of the code is to be shown, with all wording that is to be deleted to be shown with a line drawn through the words. All proposed new wording is to be underscored.

SBC 8601 ELECTRICAL. Scope. All new electrical wiring, apparatus and equipment for electric light, heat and power shall comply with the regulations contained in the 1971 Edition of the National Electrical Code as approved by the American National Standards Institute (ANSI C1-1971) and Minnesota Statutes 326.243, and the State Building Code as promulgated by the Commissioner of Administration effective January 15, 1974, namely:

1.	U.B.C.[1]	Section 605 (circuit)
2.	U.B.C.	Section 810 (fire alarms)
3.	S.B.C.[2]	Section 201 Amending Chapter 5 of U.B.C. Section 512 (G.F.I. Roof Access)
4.	S.B.C.	Section 201 Amending Section 810 of U.B.C. (fire alarms)
5.	S.B.C.	Section 201 Amending Section 909 of U.B.C. (fire alarms)
6.	U.B.C.	Section 909 (fire alarms)
7.	U.B.C.	Section 1302(b) (fire alarms)
8.	U.B.C.	Section 1310 (fire detection)
9.	U.B.C.	Section 1413 (fire warning system)
10.	U.B.C.	Section 1807(j) (standby power)
11.	U.B.C.	Section 3312 (exit signs and illumination)
12.	U.B.C.	Section 4303(a)6 (floor/ceiling system)
13.	U.B.C.	Section 4305(b) (floor/ceiling-roof/ceiling)
14.	S.B.C.	Section 8806-2(k) (standby power)

SUPPORTING STATEMENTS:

[1]Uniform Building Code 1973 Edition
[2]State Building Code effective January 15, 1974

The Section excerpts are from documents which are a part of the State Building Code. The purpose of referencing applicable Sections of the total Code in this Section is to alert any interested party that other Sections of the Code apply to electrical installation in addition to the 1971 Edition of the National Electrical Code.

(Use additional pages if necessary)

PROPOSED AMENDMENTS TO ELEVATORS, DUMBWAITERS, ESCALATORS, MANLIFTS, MOVING WALKS, HOISTS AND LIFTS.

UBC Sections 5101, 5102, 5103 and 5104, Elevators, Dumbwaiters, Escalators, Manlifts, Moving Walks, Hoists and Lifts, are deleted in their entirety.

SBC Chapter 72 is amended by adding a new section to read as follows:

SBC 7210 ADVISORY BOARD

The STATE BUILDING INSPECTOR may appoint an Advisory Board to study and make recommendations concerning the use and approval of new materials, equipment, and methods.

SBC 7301 Numbering has been editorially changed.

SBC 7301 LOAD CALCULATIONS--HEATING, COOLING AND VENTILATING. Heat Loss Calculation Required. Before designing a heating system, a heat loss calculation must be made of the maximum probable heat loss of each room or space to be heated, based on maintaining a selected indoor air temperature during periods of design outdoor weather conditions. These heat losses may be divided into groups as follows:

~~(1)~~ 1. The transmission losses or heat transmitted through the confining walls, floor,ceiling, glass or other surfaces.

~~(2)~~ 2. The infiltration losses or heat required to warm outdoor air which leaks in through cracks and crevices around doors and windows, or through open doors and windows, or heat required to warm outdoor air used for ventilation.

~~(3)~~ 3. The design data and calculations for heating loads shall be in accordance with procedure outlined in A.S.H.R.A.E. Fundamentals and Equipment for the latest publication after acceptance of this Code, or Manual J. Load Calculations, National Warm Air Heating and Air Conditioning Association.

SBC 7302 Editorial Amendments and Alphabetical Changes.
REARRANGEMENT IN ALPHABETICAL ORDER

SBC 7302 Definitions. The following terms shall mean:

~~(b)~~ BRITISH THERMAL UNIT (BTU). Approximately, it is the heat required to raise the temperature of a pound of water from 59°F. to 60°F.

~~(f)~~ FILM OR SURFACE CONDUCTANCE. The time rate of heat exchange by radiation, conduction, and convection of a unit area of a surface with the surroundings and the surrounding air or other fluid. Its value is expressed in BTU per (hour) (square foot of surface) (Fahrenheit degree temperature difference). Subscripts "i" and "o" are used to denote inside and outside surface conductances, respectively.

"K" THERMAL CONDUCTIVITY. The rate of heat flow expressed in BTU per (hour) (square foot) (Fahrenheit degree per inch of thickness).

SBC 7302 continued next page

"R. THERMAL RESISTANCE. The reciprocal of heat transfer coefficient, as expressed by U, C, f or a. Its unit is Fahrenheit degrees per BTU (hour) (square foot). For example, a wall with a U value of 0.25 would have a resistance value of R-1/U-1/0.25-4.0/

SPECIFIC HEAT. The ratio of the quantity of heat required to raise the temperature of a given mass of any substance one degree to the quantity required to raise the temperature of an equal mass of a standard substance (usually water at 59°F.) one degree. Specific heat of air 0.24 BTU per pound per degree (Standard air). Specific heat of water 1.0 BTU per pound per degree (59°).

STANDARD AIR. Air with a density of 0.075 pounds per cubic foot. This is substantially equivalent to dry air at 70°F. and 29.92 in. Hg. Barometric pressure.

~~(e)~~ THERMAL CONDUCTANCE. The time rate of heat flow expressed in BTU per (hour) (square foot) (Fahrenheit degree average temperature difference between two surfaces). The term is applied for the thickness or construction stated not per inch of thickness.

~~(a)~~ THERMAL CONDUCTANCE OF AN AIR SPACE. The time rate of heat flow through a unit area of an air space per unit temperature difference between the boundary surfaces. Its value is expressed in BTU per (hour) (square foot of area) (Fahrenheit degree).

TEMPERATURE SWING. An assumed indoor temperature swing of not more than 3 degrees on a design day when the space is conditiound 24 hours per day and the thermostat setting is 75°F.

"U. OVERALL COEFFICIENT OF HEAT TRANSMISSION (AIR TO AIR). The time rate of heat flow expressed in BTU per (hour) (square foot) (Fahrenheit degree temperature difference between air on the inside).

SBC 7303 is amended to read as follows:

SBC 7303 Heat Loss Calculation

1. The following design outdoor weather conditions; temperature, wind direction, and wind velocity, shall be as follows:

   ~~a.~~ A. Outside temperature. Select the design temperature from ~~the following list:~~ Table 73-A. Use the city closest in proximity to the location of the installation.

   ~~b.~~ B. Wind velocity 15 m.p.h.

   ~~c.~~ C. Wind direction N.W.

2. The indoor air temperature that is to be maintained in room or space during the coldest weather shall be in accordance with Table ~~2 following~~ 73-B.

   ~~a.~~ A. The indoor air temperature is the dry-bulb temperature at the breathing line, 5 feet above the floor, or at the seating level, 30 inches above the floor at a location where the temperature sensing device is not exposed to a condition of abnormal heat gain or heat loss.

3. Infiltration. The heat losses due to infiltration shall be determined by either one of the following methods:

   ~~a.~~ A. Select unit values and compute the heat equivalent of the infiltration of cold air taking place around outside doors and windows. These unit values depend on the kind or width of crack, and wind velocity assumed at 15 miles per hour. These units when multiplied by the length of crack gives the volume of outdoor air entering the building in cubic feet per hour.

   ~~b.~~ B. The amount of air leakage may be estimated by assuming a certain number of air changes per hour for each room, the number of changes assumed being dependent upon the type, use and location of the rooms as indicated in Table ~~2 following.~~ 73-B.

SBC 7303 continued next page

~~(c.)~~ C. The heat loss due to the air infiltration by either the crack method or air change method can be calculated by the following equation:

$H_s = 0.24\ Q \times d(t_i - t_o)$. ——— 1

Where
H_s-Heat required to raise temperature of infiltration air, BTU per hour.
0.24=Specific heat of air.
Q=volume of outdoor air entering building, cubic feet per hour.
d=density of air at temperature to, pounds per cubic foot.
t_i=indside air temperature, °F.
t_o=outside air temperature, °F.

It is sufficiently accurate to use d=0.075 in which case Equation (1) reduces to:

$H_s = 0.018\ Q(t_i t_o)$. ——— 2

4. When positive ventilation using outdoor air is provided by air-heating or an air-conditioning unit, the heat required to warm the outdoor air to room temperature must be provided by the unit.

~~(a.)~~ A. If mechanical exhaust from the room is provided, an amount equal to the outdoor air drawn in by the unit together with the natural infiltration losses must also be provided for by the unit.

~~(b.)~~ B. If no mechanical exhaust is used, and the outdoor air supply equals or exceeds the amount of natural infiltration that would occur without ventilation, the natural ventilation may be neglected.

5. The sum of the heat losses due to transmission through the outside walls and glass, as well as through any cold floors, ceilings, or roof, plus the heat equivalent of the cold air entering by infiltration or required to replace mechanical exhaust, represents the total heat loss equivalent for any building.

SBC 7305 Numbering has been editorially changed.

SBC 7305 Cooling Loads: General

~~(1)~~ 1. SBC 7304 through SBC 7310 outlines the methods and reference needed to be used for calculation of air conditioning cooling loads for occupancy comfort.

The Code requirements are divided into two parts:

~~(2)~~ 2. Sections SBC-7305-SBC 7308 deal with the cooling loads for commercial and public buildings.

~~(a)~~ A. Deductions from the net heat gain for storage and temperature swing when detailed load calculations are approved by the administrative authority.

~~(3)~~ 3. Section SBC 7309 through SBC 7310 deals with the load for residential cooling.

~~(a)~~ A. ~~SAME~~ as 2~~(a)~~A. ABOVE

SBC 7306 Numbering has been editorially changed.

SBC 7306 Cooling Load Calculations: Commercial and Public Buildings. Summer cooling load calculations for comfort application require consideration of the following factors:

~~(1)~~ 1. Design Conditions

~~(a)~~ A. Indoor conditions

~~(b)~~ B. Outdoor conditions

~~(c)~~ C. Ventilation rate

~~(2)~~ 2. Instantaneous Heat Load, Sensible and Latent:

~~(a)~~ A. Load from solar radiation, sky radiation, and from outdoor-indoor temperature differential for glass areas and exterior walls and roofs, modified by periodic heat flow or lag factors depending on the type of structure.

SBC 7306 continued next page

SBC 7306 continued:

~~(b)~~ B. Load due to heat gain through interior partitions, ceilings and floors.

~~(c)~~ C. Load due to ventilation, either natural or mechanical.

~~(d)~~ D. Load due to heat sources within the conditioned space such as people, lights, power equipment and appliances.

~~(e)~~ E. Load due to moisture transfer through the permeable building materials.

~~(f)~~ F. Miscellaneous heat sources.

~~(3)~~ 3. Determination of Air Quantity and Apparatus Dew Point.

SBC 7307 is amended to read as follows:

SBC 7307 Design Conditions: Commercial and Public Buildings

~~(1)~~ 1. Indoor conditions. Indoor design conditions for which summer air conditioning is selected should be chosen at 75°F. dry bulb, with a relative humidity of 50 per cent.

~~(2)~~ 2. Outdoor design conditions. The outdoor design conditions shall be selected from Table ~~No. 4.~~ 73-D.

~~(3)~~ 3. Ventilation Rate. Outdoor air requirements for ventilation of conditioned spaces shall be selected from Table ~~No. 5~~ 73-E.

SBC 7308 Numbering has been editorially changed.

SBC 7308 Instantaneous Heat Load: Commercial and Public Buildings

~~(1)~~ 1. The total cooling load shall be divided into the two components, sensible and latent heat.

SBC 7308 continued next page

~~(2)~~ 2. Other factors which have a direct effect on the cooling and must be included are:

~~(a)~~ A. Solar radiation

~~(b)~~ B. Periodic heat flow through the walls and roofs.

~~(c)~~ C. Effect of shading.

~~(d)~~ D. Load from moisture transfer through permeable building materials.

~~(e)~~ E. Miscellaneous Heat Loads: This item covers the small heat gains from exposed piping, ducts, work done by circulating fans, and other contingencies.

SBC 7309 Numbering has been editorially changed.

SBC 7309 Cooling Loads: Residential

~~(1)~~ 1. The design data and calculation methods for determining residential cooling load shall be in accordance with the procedure outlines in A.S.H.R.A.E., Fundamentals and Equipment, Chapter 27, pages 487 to 529 inclusive or Manual J. Load Calculation, National Warm Air Heating and Air Conditioning Association.

~~(2)~~ 2. They shall also conform to the requirements as set forth in Sections SBC 7309 and SBC 7310.

SBC 7310 Numbering has been editorially changed.

SBC 7310 Cooling Load Calculations: Residential. Residential cooling load calculations for comfort application are based on the following factors:

~~(1)~~ 1. Design Conditions:

~~(a)~~ A. Indoor conditions: Indoor design temperature shall be 75°F. with a relative humidity of 50 per cent and a temperature swing of not more than 3°F.

SBC 7310 continued next page

SBC 7310 continued:

~~(b)~~ B. Outdoor conditions: The outdoor design conditions shall be selected from Table ~~3.~~ 73-D.

~~(c)~~ C. Infiltration:

1. The rate of air infiltration shall be based on 1/2 air change per hour.

2. Factors for calculating natural infiltration are shown in Table ~~3.~~ 73-C. Because of the effect of house configuration, they are calculated in BTU per square foot of gross exposed wall area.

~~(2)~~ 2. Occupancy Load. Heat release per occupant of a residence shall be taken as 300 Btuh of sensible heat.

~~(3)~~ 3. Appliance Load A value of 1200 Btuh of sensible heat release shall be taken for kitchen appliances.

~~(4)~~ 4. Total Sensible Heat Gains. The total sensible heat gain of the structure is the sum of the sensible heat gains of all rooms plus occupancy and appliance load.

~~(5)~~ 5. Latent Load. The latent load of a residence is a part of the total heat gain and is estimated to be 30% of the calculated sensible load.

SBC 7311 Numbering has been editorially changed.

SBC 7311 Total Cooling Load: Residential

~~(1)~~ 1. The total cooling load is the sum of the sensible load and the latent load.

~~(2)~~ 2. The total load shall be calculated as 1.3 times the calculated sensible load.

~~(3)~~ 3. Whenever the distribution system is located outside of the conditioned space--in attics, crawl spaces, or unconditioned rooms, heat gains, to the ducts or pipes must be included as an equipment load and must be considered in equipment selection.

SBC Chapter 73 is amended by adding a new section to read as follows:

SBC 7312 Partial Cooling

1. Partial Cooling is a provision for a reduction of not less than 5 degrees Fahrenheit in the dry bulb of the air in the occupied rooms.

2. No person shall install an air conditioning system for partial cooling until he has furnished the administrative authority a letter from the purchaser acknowledging that said purchaser is buying partial cooling.

3. The provisions to Chapters 7305, 7306, 7307, 7308, 7309, 7310, 7311 and 7312 shall not apply to the single unit plug-in type air or room conditioner.

TABLE ~~NO.-1~~ 73-A

Albert Lea	—20° F.	Marshall	—23° F.
Alexandria	—26° F.	Minneapolis	—19° F.
Bemidji	—38° F.	St. Paul	—19° F.
Brainerd	—31° F.	Moorhead	—28° F.
Detroit Lakes	—35° F.	Rochester	—23° F.
Duluth	—25° F.	Roseau	—38° F.
Fairmont	—19° F.	St. Cloud	—26° F
Faribault	—23° F.	Thief River Falls	—33° F
Fergus Falls	—28° F.	Virginia	—32° F.
Grand Rapids	—37° F.	Willmar	—25° F.
International Falls	—35° F.	Winona	—19° F.
Mankato	—23° F.	Worthington	—20° F.

TABLE ~~NO.-2~~ 73-B

WINTER INDOOR DRY-BULB TEMPERATURES

TYPE OF BUILDING	Degree F.
Residences	75
Stores	68-70
Public Buildings	72-74
Warm air Baths — Saunas	120
Steam Baths	110
Factories and Machine Shops	60-65
Foundries and Boiler Shops	50-60
Paint Shops	75-80
Hospitals	
Private rooms and wards	72-74
Private rooms (Surgical)	70-80
Operating Rooms	70-75
Kitchens and Laundries	68-70
Toilets	70-75
Bathrooms	70-80
Hotels	
Bedrooms and bath	75
Dining rooms	72
Kitchens and Laundries	68-70
Ballrooms	65-68
Toilets and Service Rooms	68-70
Theaters	
Seating Space	68-72
Lounge Rooms	68-72
Toilets	70-75
Schools	
Classrooms	72-74
Assembly Rooms	68-72
Gymnasiums	55-65
Toilets and Baths	70-75
Wardrobes and Locker Rooms	70-75
Kitchens	68-70
Dining Room and Lunch Room	65-70
Play Rooms	65-70
Natatoriums	75

TABLE ~~NO.~~ -3- 73-C

AIR CHANGES TAKING PLACE UNDER AVERAGE CONDITIONS EXCLUSIVE OF AIR PROVIDED VENTILATION

KIND OF ROOM OR BUILDING	NO. OF AIR CHANGES Per Hour
Rooms, 1 side exposed	1
Rooms, 2 sides exposed	1 to 1½
Rooms, 3 sides exposed	2
Rooms, 4 sides exposed	2
Rooms with no windows or outside doors	½ to 3
Entrance Halls	2 to 3
Reception Halls	2
Living Rooms	1 to 2
Dining Rooms	1 to 2
Bath Rooms	2
Drug Stores	2 to 3
Clothing Stores	1
Churches, Factories, Lofts, etc.	½ to 3

TABLE 73-D--OUTDOOR SUMMER CLIMATIC CONDITIONS (Minnesota)

	Design Dry Bulb			Design Wet Bulb		
Location	1%	2½%	5%	1%	2½%	5%
Alexandria	90	88	85	76	74	72
Duluth	85	82	79	73	71	69
Int. Falls	86	82	79	72	69	68
Minneapolis	92	89	86	77	75	74
St. Paul	92	89	86	77	75	74
Rochester	90	88	85	77	75	74
St. Cloud	90	88	85	77	75	73

Note: Data compiled from official weather stations where hourly weather observations are made and from other sources. Percentage of design data show the per cent of 4-month period, June through September.

SBC 7300 Table 73-E is amended to read as follows:

TABLE 73-E--OUTDOOR AIR REQUIREMENTS[a]

Application	Smoking	Cfm Per Person[b]		Cfm per Sq.[b] Ft. of Floor
		Recommended	Minimum[c]	Minimum[c]
Apartment				
Average	Some	20	10	—
Deluxe	Some	20	10	—
Banking space	Occasional	10	7½	—
Barber shops	Considerable	15	10	—
Beauty parlors	Occasional	10	7½	—
Brokers' board rooms	Very heavy	50	20	—
Cocktail bars	—	40	25	—
Corridors (supply or exhaust)	—	—	—	0.25
Department stores	None	7½	5	0.05
Directors' rooms	Extreme	50	30	—
Drugs stores[e]	Considerable	10	7½	—
Factories[d,f]	None	10	7½	0.10
Five and Ten Cent stores	None	7½	5	—
Funeral Parlors	None	10	7½	—
Garages[d]	—	—	—	~~1.0~~ 0.75
Hospitals				
Operating rooms[f,g]	None	—	—	2.0
Private rooms	None	30	25	0.33
Wards	None	20	10	—
Hotel Rooms	Heavy	30	25	0.33
Kitchens				
Restaurant	—	—	—	4.0
Residence	—	—	—	2.0
Laboratories[e]	Some	20	15	—
Meeting rooms	Very heavy	50	30	1.25
Offices				
General	Some	15	10	0.25
Private	None	25	15	0.25
Private	Considerable	30	25	0.25
Restaurants				
Cafeteria[e]	Considerable	12	10	—
Dining room[e]	Considerable	15	12	—
Schoolrooms[d]	None	—	—	—
Shop, retail	None	10	7½	—
Theater[d]	None	7½	5	—
Theater	Some	15	10	—
Toilets[d] (exhaust)	—	—	—	2.0

[a]Taken from present-day practice.
[b]This is contaminant-free air.
[c]When minimum is used, take the larger of the two.
~~[d]Use local codes which may govern.~~
[d]May be governed by exhaust.
[e]May be governed by special sources of contamination ~~or local code~~.
[f]All outside air recommended to overcome explosion hazard of anesthetics.
For general applications, a basis of estimating the cfm per person may be taken as:
(1.) People not smoking—5 minimum.
(2.) People [illegible]—[illegible] minimum.

TABLE ~~NO.~~ 6 73-F

SENSIBLE COOLING LOAD DUE TO INFILTRATION

AND VENTILATION

Outside Design Temperature, °F.	85	90	95
Infiltration, Btuh per square foot of gross exposed wall area	0.7	1.1	1.5
Mechanical Ventilation Btuh per cfm	11.0	16.0	22.0

SBC 7402 Editorial Amendments and Alphabetical Changes.

SBC 7402 Definitions. The following terms shall mean:

Barometric Draft Regulator. A device with functions to maintain a desired draft in an appliance by automatically reducing the chimney draft to the desired value.

Chimneys. A vertical shaft enclosing one or more passageways for the removal of combustion products.

Chimney Liner--Non Metallic. A lining material of fire clay or other approved material that meets the requirements of the Minnesota State Building Code.

Chimney Liner--Metallic. A vent pipe or chimney liner inserted within a chimney for the purpose of minimizing condensation of flue products and preventing such condensation from contact with the interior of the type A flue or vent in which it is inserted.

Chimney or Vent. A conduit or passageway, vertical or nearly so for conveying flue gasses to the outer air.

Draft Hood. A device built into an appliance or made a part of the vent connector from an appliance, which is designed to (1) insure the ready escape of the products of combustion in the event of no draft, back draft, or stoppage beyond the draft hood; (2) prevent a back draft from entering the appliance; and (3) neutralize the effect of stack action of the chimney or vent upon the operation of the appliance.

Type B. Gas Vents. Vent piping of noncombustible, corrosion resistant material of sufficient thickness, cross-sectional area, and heat insulating quality to avoid excess temperature on adjacent combustible material and certified by nationally recognized testing agency.

Type B.W. Gas Vents. Gas vents listed by a nationally recognized testing agency for venting listed or approved gas fired vented recessed heaters or furnaces. Vents are similar to Type B vents, but may be placed closer to combustible materials due to the special manner in which they are required to be installed.

SBC 7402 continued next page

Type L. Venting Systems. A venting system composed of listed factory built components assembled in accordance with the items of the listing for venting appliances listed for use with Type L Venting Systems. They may be used where Type B Gas Vents are permitted.

Vent Connector. The pipe connecting an appliance with the chimney, vent or chimney liner. This corresponds to the smoke pipe used with solid or liquid fuels.

SBC 7403 is amended to read as follows: (numbering has been editorially changed)

SBC 7403 Chimneys.

1. Three general types of chimneys are:

~~(a)~~ A. Masonry Chimneys. Field constructed chimneys built in accordance with the requirements of the Minnesota State Building Code.

~~(b)~~ B. Factory Built Chimneys. Chimneys that are factory made, listed by a nationally recognized testing agency, for venting gas appliances, gas incinerators, and solid or liquid fuel burning appliances.

~~(c)~~ C. Metal Chimneys. (Smoke Stacks) Chimneys made of metal of adequate thickness, galvanized or painted, unless suitable corrosion resistant, properly welded or riveted and built in accordance with nationally recognized standards.

2. Chimneys shall be used for venting the following:

~~1.~~ A. All appliances which may be converted readily to the use of solid or liquid fuels.

~~2.~~ B. All boilers and warm air furnaces except where approved for connection to type B gas vents approved by the administrative authority.

~~3.~~ C. All incinerators.

SBC 7402 continued next page

SBC 7402 (3) continued:

3. Termination of Chimneys.

~~1.~~ A. Chimneys shall extend at least ~~3~~ 2 feet above the highest point where they pass through the roof of a building and at least 2 feet higher than any portion of any building within 10 feet.

~~2.~~ B. Chimneys or vents serving gas fired appliances shall extend at least five feet (5') above the highest connected appliance draft hood outlet or flue collar with natural draft.

4. Size of Chimneys.

~~1.~~ A. The effective area of the chimney when connected to a single appliance shall be not less than the area of the appliance draft hood outlet or in accordance with approved engineering methods. Ref.: Minnesota State Building Code.

~~2.~~ B. The effective area of the chimney when connected to more than one gas appliance shall be not less than the area of the largest vent connector plus 50% of the areas of additional vent connectors or in accordance with approved engineering methods. Ref.: Minnesota State Building Code.

~~3.~~ C. When an incinerator is vented by a chimney serving other fuel burning appliances the area of the vent of the incinerator need not be included in calculating the chimney size provided the chimney size is at least one inch larger in equivalent diameter than the diameter of the incinerator vent. No other fuel burning appliance shall be vented into a chimney having a flue fed incinerator or garbage drops.

5. Inspection of Chimneys.

~~1.~~ A. All masonry chimneys to which heating boilers or furnaces are to be connected shall be subject to and ~~must~~ must successfully withstand a smoke test before such connection is permitted. In the case of new chimneys, the test shall be made after the mortar has set. Such smoke tests shall be made by building a smudge fire at the bottom of the flue, using tar paper or similar material to create the smudge,

SBC 7402 continued next page

and when the smoke is flowing freely from the top of the flue, closing it tightly at the top, all heater or vent openings into said flue be tightly closed before test is started and the cleanout openings to be left open for draft. All leaks in such chimney disclosed by such test shall be closed and made tight before the chimney is accepted or a heating plant connected thereto. The contractor shall make or have made such tests.

~~2.~~ B. Not more than one flue in the same chimney shall be tested at one time.

~~3.~~ C. All chimneys in buildings that have been moved to new locations shall be tested in the above manner before being put into use.

~~4.~~ D. All chimneys shall have cleanouts and the cleanouts shall be constructed so that they will remain tightly closed when not in use. The fittings used as cleanouts shall have tight-fitting caps to prevent entrance of air into the chimney at those points.

~~5.~~ E. When inspection reveals that an existing chimney is not safe for the intended application, it shall be rebuilt to conform to nationally recognized standards, relined with a suitable liner or replaced with a gas vent or chimney suitable for the appliances to be attached.

6. Chimney Liners--Metallic. Masonry chimneys serving gas fired boilers, furnaces, or other heating devices, whether of the gas designed type or fired by gas conversion burners having an input not exceeding 400,000 BTU per hour, shall be lined continuously from the thimble to the top of the chimney with an approved non-combustible, acid and corrosion resisting liner of the same equivalent cross sectional area as the vent connector.

~~1.~~ A. A condensation pocket shall be provided at the base of said liner with provision for a drip, so arranged that excessive condensation of combustion products may be disposed of without damage to the chimney, foundation, floor or footings.

SBC 7402 continued next page

2. B. The following materials of thickness specified are approved for use as chimney liners.

(a) 1. Aluminum 2S-H14, 1/2 hard, thickness .032 inches to 8 inches in diamater. Temperatures not to exceed 550°F. at outlet of equipment.

(b) 2. Stainless Steel No. 302, No. 26 U.S. Standard gauge to 8 inches diameter, No. 24 U.S. Standard gauge over 8 inches diameter.

(c) 3. Vitreous coated steel of No. 22 U.S. Standard gauge before coating.

(d) 4. Class B vents approved by Underwriters' Laboratories. Temperatures not to exceed 550°F. at outlet of appliance.

(e) 5. Other types of liners shall require the approval of the administrative authority.

3. C. Chimney caps may be used on chimney liners providing they do not obstruct or impair the free emission of the products of combustion, and are approved by the administrative authority.

4. D. A chimney liner release will be granted only when the administrative authority finds it impossible to install a liner.

5. E. Outside horizontal masonry flues shall not be used for venting of gas burning appliances.

6. F. When a gas fired incinerator meeting the smokeless and odorless requirements of ANSI Z21.6-1969 and approved by the Minnesota Pollution Control Agency is properly connected to a masonry chimney, having a tile flue liner, the chimney liner--metallic required adobe may be omitted. If an incinerator is connected to a chimney as described above having an existing metallic liner for temperatures not to exceed 550°F. the liner shall be removed and no liner will be required.

SBC 7403 continued next page

7. Metal Chimneys (smoke stacks).

~~1.~~ A. Installation.

~~(a)~~ 1. Single-wall metal pipe shall be constructed of sheet steel not less than No. 20 sheet gauge or other approved noncombustible corrosion resistant material.

~~(b)~~ 2. Single-wall metal pipe used to vent gas appliances shall comply with the installation provisions of SBC ~~1303~~ 7409 ~~(Size of Single-wall Metal Pipe) (a) and (b) following:~~

~~(c)~~ 4. Single-wall metal pipe shall not originate in any unoccupied attic or concealed space, and shall not pass through any attic, inside wall, concealed space or through any floor.

~~(e)~~ 5. When a single-wall metal pipe passes through an exterior wall constructed of combustible material, it shall be guarded at the point of passage by a method described in SBC 7409.

~~(f)~~ 6. When a single-wall metal pipe passes through a roof constructed of combustible material, it shall be guarded at the point of passage by a method described in SBC 7409 or by a noncombustible, nonventilating thimble not less than 4 inches larger in diameter than the vent pipe and extending not less than 18 inches above and 6 inches below the roof with the annular space open at the bottom and closed only at the top.

~~2.~~ B. Installation with Incinerators. Single-wall pipe not less than No. 10 galvanized sheet gauge or other equivalent noncombustible, corrosion resistant material may be used for venting incinerators installed in locations such as open sheds, breezeways, or carports, provided the metal pipe is exposed and readily examinable for its full length.

C. Clearance. Minimum clearances from a single-wall metal pipe to combustible material shall be in accordance with Table ~~of Clearances following:~~ 74-K.

SBC 7404 is deleted in its entirety and the following inserted in lieu thereof: (Underlining represents alterations to the SBC)

SBC 7404 Gas Vents and Flues, Types and Use.

1. All gas appliances required to be vented except sealed combustion system appliances shall be connected to a venting system that shall be:

   A. Engineered and constructed so as to develop a positive flow adequate to remove flue gasses to the outside atmosphere.

   B. When venting systems serve appliances requiring draft for proper operation they shall be designed and installed to develop adequate draft so as to satisfy the draft requirements of the appliance with the manufacturer's instructions.

2. Types of Flues, or Vents, Use of.

   Type A flues or vents shall be employed for venting:

   A. All appliances which may be converted readily to the use of solid or liquid fuels.

   B. All boilers and warm air furnaces except where approved for connection to type B gas flue or vents.

   C. All incinerators.

3. Type B Gas Vents.

   A. Application: Not to be used with recessed heaters, incinerators, and appliances listed for use with chimneys only.

   B. Shall be round in physical shape except as approved for B-W vents in the following.

SBC 7404 continued next page

C. Shall be installed in accordance with this chapter and the manufacturer's specifications.

D. Type B gas flues or vents shall be used only with nationally recognized testing agency approved gas designed appliances which produce the gas temperatures not in excess of 550° F. at the outlet of the draft hood when burning gas at the manufacturer's normal input rating and not specified by this section to be vented to Type A flues or vents.

E. A Condensation pocket shall be provided at the base of such type B flue or vent with provision for a drip, so arranged that excessive condensation of flue products may be disposed of without damage to the foundation, floor, walls or footings.

F. If rainwater cannot be allowed in a vent and a cap must be used, such cap should have as little cooling surface as possible, be screened with visible 1/2 inch mesh screen, be corrosion resistive (aluminum or galvanized steel), installed so the clearance between the vent cap and end of vent is equal to vent diameter, and so constructed and installed that it is impossible for the cap to slip down over the vent.

4. Type B-W Gas Vents.

A. The venting of recessed or surface mounted wall heaters or furnaces shall be such that a section of Type B-W vent material shall extend through the plate directly above the heater. Immediately above the highest plate there shall be a transition fitting from the oval class B-W vent to round Class B vent material. This shall extend a minimum of total height of 12 feet (12') above the floor on which the heater sits.

B. Wall heaters or furnaces which have been designed by their manufacturer for a horizontal vent take off and have been so tested and approved shall have their horizontal vent connector as short as possible. The maximum length of the horizontal run shall be 6 feet.

SBC 7404 continued next page

SBC 7404 continued:

5. Type C Gas Flues or Vents.

A. Type C gas flues or vents shall be used for runs directly from the space in which the appliance is located through the roof or exterior wall to the outer air. Such flues or vents shall not pass through any attic or concealed space nor through any floor. Installation with reference to clearance to combustible construction and passage through wall or roof shall comply with the provisions of SBC 7403, Table 74-K.

AND

SBC 7405 Deleted in its entirety and the following inserted in lieu thereof:

SBC 7405 GAS VENTS - VENT CONNECTORS

1. Sizing of Gas Vent. The size of the common vent serving connected gas appliances shall be computed on the basis as shown in Figure 74-5.

2. Sizing Vent Pipe. The vent pipe or connection shall not be smaller than the size indicated by the vent pipe collar of the appliance and not less than one square inch in cross sectional area for each 7,500 BTU per hour input to appliance, and in accordance with Table 74-J. In no case shall the vent from any appliance be less than 3 inches in diameter. If engineered procedures are used SBC 7409, Tables A,B,C,D, ~~D(1)~~ D(1), E and F should be used.

A. Where high chimneys create high draft intensities, deviations from the foregoing table to the extent of practicability may be permitted by the administrative authority.

B. Two or more gas appliances may be vented through a common flue or vent connector when necessary, if the area of the common flue or vent connector is equal to or greater than 1 square inch in cross-sectional area for each 7,500 BTU per hour input of the individual gas appliances.

SBC 7405 continued next page

C. Where mechanical draft is applied, vent size shall be determined based upon capacity and type of equipment, and subject to approval of the administrative authority. Where high temperatures are encountered, fan or blower construction shall be so designed as to safely operate under those temperatures.

3. Size of Vent Connector.

A. The effective area of the vent connector, when connected to an appliance having a single draft hood, shall be not less than the area of the draft hood outlet or shall be in accordance with approved engineering methods. (See Tables 74-A, B, and C, which set forth minimum acceptable standards).

B. For single appliances having more than one draft hood outlet, the instructions of the appliance manufacturer shall be followed. If there are none, the effective area of the vent connector shall equal the combined areas of the draft hood outlets for which it acts as a common connector to the venting system.

C. When two or more appliances are connected to a common vent or chimney, the effective area of each vent connector shall be not less than the area of the appliance draft hood outlet or shall be in accordance with approved engineering methods. (See Table 74-D, E and F, which set forth minimum acceptable standards). D(1)

D. Each vent connector of a multiple venting system shall have the greatest possible vertical rise consistent with the headroom available between the draft hood outlet and the point of interconnection to a manifold, to a common vent, or to a chimney, or the vertical rise shall be in accordance with approved engineering methods. (See Tables 74-D, E, and F which set forth minimum acceptable standards).

SBC 7405 continued next page

E. When the size of a connector is increased to overcome installation limitations and obtain connector capacity equal to the appliance input, the size increase shall be made at the appliance draft hood outlet.

F. Two or more gas appliances may be vented through a common vent connector when necessary, if joined by "Y" fittings as close as practicable to the flue or vent and provided the size of the common flue or vent is sufficient to accomodate the total volume of flue gases. "Y" fittings shall be made so that the angle at which the vent connectors intersect is as small as possible and should not exceed 45°.

4. Size of Single-wall Metal Pipe.

A. The effective area of single-wall metal pipe when connected to a single appliance shall be not less than the area of the appliance draft hood outlet or in accordance with approved engineering methods. (See Table 74-B which sets forth minimum acceptable standards).

B. The effective area of a single-wall metal pipe when connected to more than one appliance shall be not less than the area of the largest vent connector plus 50% of the areas of additional vent connectors or in accordance with approved engineering methods. (See Table 74-E which sets forth minimum acceptable standards).

SBC 7406 is deleted in its entirety and the following inserted in lieu thereof:

SBC 7406 DRAFT HOODS - DAMPERS

1. DRAFT HOOD. A device built into an appliance, or made a part of the flue or vent connector from an appliance, which is designed to:

   A. Insure the ready escape of the products of combustion in the event of no draft, back draft, or stoppage beyond the draft hood.

   B. Prevent a back draft from entering the appliance.

   C. Neutralize the effect of stack action of the flue or vent upon the operation of the appliance.

2. DRAFT HOODS. Every vented appliance except units designed for forced venting or those using barometric dampers shall be provided with a draft hood. If the draft hood is not a part of the appliance or supplied by the appliance manufacturer, it shall be supplied by the installer and, in the absence of other instructions, shall be the same size as the appliance flue collar. However, the flue collar of a boiler or furnace fired by a conversion burner may be reduced in size by means of a tapered reducer to that size required by the input to the conversion burner.

   A. Installation. Where the draft hood is a part of the appliance or is supplied by the appliance manufacturer, it shall be installed without alteration in accordance with the manufacturer's instructions. In the absence of the manufacturer's instructions, the draft hood shall be attached to the flue collar of the appliance or as near to the appliance as conditions permit. In no case shall a draft hood be installed in a false ceiling, in a different room, or in any manner that will permit a difference in pressure between the draft hood relief opening and the combustion air supply.

SBC 7406 continued next page

B. Position. A draft hood shall be installed in the position for which it was designed with reference to the horizontal and vertical planes and shall be so located that the relief opening is not obstructed by any part of the appliance or adjacent construction.

C. Special Draft Hoods. Where, due to unusual conditions, the installer must supply a draft hood of special design, its design, construction and installation shall be subject to the approval of the administrative authority.

3. Barometric Dampers

A. An approved draft regulator having a minimum free area of 3/4 of the area of the boiler or furnace breeching outlet may be used in lieu of a draft hood.

B. Where barometric dampers are used they shall furnish positive and effective protection against back drafts and shall have means to shut off the main gas supply in the event of a down draft. Barometric dampers shall be installed in accordance with the manufacturer's instructions.

4. Internal Draft Dampers

A. Uptake dampers shall be counter-balanced to open in the event of breakage or failure of their operating means. Counterbalancing arms, weights, etc. shall be so located or shielded as to prevent personal injury or damage to equipment in case of breakage.

1. For automatically lighted burners automatically operated dampers, where used, shall be interlocked to prevent lighting of the main burner unless sufficient draft is available.

SBC 7406 continued next page

SBC 7406 continued:

2. All combustion control systems shall be so installed as to assure stable, safe and approved proper standards of combustion and efficiency with a minimum of 70% for the required range of operation. The sequence of operation of automatic damper controls shall be subject to the approval of the administrative authority.

3. When air louvers, dampers or other air controls are automatically operated, such operation shall be in conjunction with gas input control valves, either by mechanical linkage or changes in furnace pressure and/or change in fuel flow to maintain proper fuel-air ratio over the entire required range of operation. The operating medium may be electrical, pneumatic or hydraulic. Arrangements shall be provided for shutting off the fuel supply in the event of a failure of the control medium.

SBC 7407 is deleted in its entirety and the following inserted in lieu thereof: (Underlining represents alterations to the SBC)

SBC 7407 INSTALLATION REQUIREMENTS OF GAS VENTS AND VENT CONNECTORS

1. Chimney Liners. When the administrative authority requires a metal flue liner such liner shall comply with SBC 7402.3 A chimney liner release will be granted when the administrative authority finds it impossible to install a liner.

2. Outside Gas Vents and Chimneys. Materials. Outside gas vents and chimneys are not recommended for use in cold climates. When they must be used in these climates, the material shall possess high insulation qualities or be adequately insulated.

3. Condensate Drain. When local experience indicates that condensate may be a problem, provisions shall be made to drain off the condensate.

SBC 7407 continued next page

4. Prohibited Termination. Natural draft vents extending through outside walls shall not terminate adjacent to outside walls or below eaves or parapets.

5. Vent Connectors. When Required. Vent connectors shall be used to connect gas appliances to the gas vent, chimney or single-wall metal pipe except when the gas vent, chimney or single-wall metal pipe is directly connected to the appliance.

A. Materials.

~~(a)~~ 1. Vent connectors used for conversion burners without draft hoods, incinerators, and unlisted appliances without draft hoods shall be constructed of materials having a resistance to corrosion and heat not less than that of No. 24 galvanized sheet gage.

~~(b)~~ 2. Vent connectors used for gas appliances having draft hoods and for listed conversion burners having draft hoods shall be constructed of materials having a resistance to corrosion and heat not less than that of No. 26 galvanized sheet gage, except that Type B vent material may be used as the connector between the draft hood and the chimney.

6. Single Wall Vent Pipe. The material and installation of single wall vents shall comply with the requirements as specified in SBC 7409.

A. The effective area of a single-wall metal pipe when connected to more than one appliance shall be not less than the area of the largest vent connector plus 50% of the areas of additional vent connectors or in accordance with approved engineering methods. (See Table 74-E which sets forth minimum acceptable standards).

B. Support of Single-wall Metal Pipe. All portions of single-wall metal pipe shall be adequately supported for the design and weight of the material employed.

7. Gas Vent--Termination. Gas vents may be terminated not less than twelve inches (12") above the highest point where they pass through a roof.

SBC 7407 continued next page

SBC 7407 continued:

A. Each gas vent shall extend above the roof surface and through its flashing. The outlet opening of any vent shall be not less than twelve inches (12") from any portion of the building or structure, nor less than four feet (4') from any of that portion of the building or structure which extends at an angle of more than 45 degrees upward from the horizontal. (See Figure 74- 6).

B. Type B gas vents shall not terminate less than five feet in vertical height above the highest connected appliance draft hood outlet or flue collar.

1. In commercial and industrial buildings, the effective area of a Type B gas vent when connected to a single appliance shall not be less than the area of the appliance draft hood outlet or in accordance with approved engineering methods.

C. Type B-W gas vents serving a vented wall furnace shall terminate not less than twelve feet (12') in vertical height above the bottom of the heater.

8. Support of Gas Vents. All portions of gas vents shall be adequately supported for the design and weight of the materials employed. Listed gas vents shall be supported and spaced in accordance with their listings and the manufacturer's instructions.

9. Gas Vents Serving Two or More Gas Appliances Having Draft Hoods.

A. When two or more vent connectors enter a common vertical gas vent, the smaller connector should enter at the highest level consistent with available headroom or clearance to combustible material and the appliance located as close to vertical vent as possible.

SBC 7407 continued next page

B. Two or more gas appliances may be vented through a common vent connector or manifold located at the highest level consistent with available (normal) headroom or clearance to combustible material.

C. The manifold, all junction fittings, and the common vent connector shall be of a size adequate for the combined volume of the vent gases.

10. Clearance. Minimum clearance from vent connectors to combustible material shall be in accordance with Table 7A-A. When vent connectors must pass through walls or partitions of combustible material, a thimble shall be used and installed in accordance with one of the methods outlined in the following:

A. Avoid Unnecessary Bends. The vent connectors shall be installed so as to avoid excessive turns or other construction features which create unnecessary resistance to flow of vent gases.

B. Joints. Vent connectors shall be firmly attached to draft hood outlets by sheet-metal screws or other approved means.

~~(a)~~ 1. Vent connectors using listed Type B gas vent material shall be securely assembled using the method shown in the listing and the manufacturer's instructions.

~~(b)~~ 2. Joints of other than listed Type B gas vent material shall be securely fastened by sheet-metal screws or other approved methods.

11. Pitch. Vent connectors shall be installed without any downward pitch from the appliance and without any dips or sags.

~~(a)~~ A. Vent connectors attached directly to the side outlet draft hoods, such as on floor furnaces, shall be pitched upward from the appliance at least 1/4" per foot.

~~(b)~~ B. Vent connectors attached to top outlet draft hoods by means of a 90 degree elbow may be horizontal or pitched upward from the appliance.

SBC 7407 continued next page

12. Length. The horizontal run of the vent connector shall be as short and direct as possible and the appliance shall be located as near the gas vent, chimney, or single-wall metal pipe as practicable. The maximum length of an uninsulated horizontal run of vent connector shall not exceed 75% of the height of the gas vent, chimney, or single-wall metal pipe or shall be in accordance with approved engineering methods.

13. Support. Vent connectors shall be adequately supported for the design and weight of the materials employed to maintain proper clearance, to prevent physical damage and to prevent separation of the joints.

14. Location. When the vent connector used for an appliance having a draft hood must be located in or pass through a crawl space or other area difficult of access which may be cold, the portion of the vent connector shall be listed. Type B gas vent material or material having equivalent insulation qualities. Single-wall metal pipe used as a vent connector shall not pass through any floor or ceiling.

15. Chimney Connection. In entering a passageway in a masonry or metal chimney, the vent connector shall be installed above the extreme bottom to avoid stoppage. Means shall be employed which will prevent the vent connector from entering so far as to restrict the space between its end and the opposite wall of the chimney. A thimble or slip joint may be used to facilitate removal of the vent connector. The vent connector shall be firmly attached to or inserted into the thimble or slip joint to prevent it from falling out.

16. Fireplace. A vent connector shall not be connected to a chimney serving a fireplace unless the fireplace opening is permanently sealed.

17. Venting. Insufficient Draft. In the event conditions at the time of installation are such that the chimney or vertical flue has insufficient natural draft to properly carry away the products of combustion, provision shall be made by the installer to rectify existing conditions or provide mechanical means of maintaining constant up draft during appliance operation. The draft must be proved before the burner may be operated.

SBC 7408 is amended to read as follows:

SBC 7408 Special Venting Arrangements

1. Appliance with ~~Sealed-Combustion~~ Direct Vent Systems

~~(a)~~ A. The provisions of draft hoods do not apply to listed appliances having ~~sealed-combustion~~ direct vent systems constructed and installed so that all air from combustion is derived from the outside atmosphere and flue gases are discharged to the outside atmosphere. Such appliance, having integral venting, shall be considered as being properly vented when they are installed in accordance with their listing and the manufacturer's instruction.

~~(b)~~ B. Vent terminals of ~~sealed-combustion~~ direct vent system appliances shall be located not less than nine inches (9") from any opening through which combustion products could enter the building. A ~~sealed-combustion~~ direct vent system appliance may be installed in building opening, such as a window. The bottom of the vent terminal and the air intake shall be located at least twelve inches (12") above grade.

2. Mechanical Draft Systems.

~~(a)~~ A. Venting system exhausters may be used in lieu of natural draft vents for any gas appliance except incinerators. When exhausters are used with gas appliances, requiring venting, provisions shall be made to prevent the flow of gas to the main burner in the event of failure of the exhaust system. The interlock shall prove actual air flow.

~~(b)~~ B. Vent connectors serving gas appliances vented by natural draft shall not be connected into the discharge side of the power exhausters.

~~(c)~~ C. The exit terminals of exhauster equipped gas venting systems shall be located not less than nine inches (9") from any building opening nor less than two feet (2') from an adjacent building and not less than seven feet (7') above grade when located adjacent to public walkways.

SBC 7408 continued next page

~~(d)~~ D. Forced draft systems and all portions of induced draft systems under positive pressure during operation shall be designed and installed so as to be gas tight or as to prevent leakage of combustion products in a building.

3. Ventilating Hoods and Exhaust Systems.

~~(a)~~ A. Ventilating hoods and exhaust systems may be used to vent gas burning appliances installed in commercial applications, when approved by the administrative authority.

4. Dampers. Manually operated dampers shall not be placed in the vent connectors from gas appliances except that manually operated dampers may be installed in the vent connector of listed gas incinerators when recommended by the manufacturer. Such a damper or draft regulator shall be installed in accordance with the instructions accompanying the incinerator. Fixed baffles, such as baffles ahead of draft hoods, are not classified as dampers.

5. Use of Thimbles.

~~(a)~~ A. When passing through combustible walls or partitions, vent connectors built of listed Type B gas vent material shall be installed so that the clearances required by the listing are maintained.

~~(b)~~ B. Vent connectors made of single-wall metal pipe shall not pass through any combustible walls unless they are guarded at the point of passage by ventilated metal thimbles not samller than the following:

1. For listed appliances, except incinerators four inches larger in diameter than the vent connector unless there is a run of not less than 6 feet of vent connector in the open, between the draft hood outlet and the thimble, in which case the thimble may be two inches larger in diameter than the vent connector.

2. For unlisted appliances having draft hoods, 6 inches larger in diameter than the vent connector.

3. For incinerators and unlisted appliances without draft hoods, 12 inches larger in diameter than the vent connector.

SBC 7408 continued next page

SBC 7408 continued:

~~(c)~~ C. in lieu of thimble protection, all combustible materials in the wall shall be cut away from the vent connector a sufficient distance to provide the clearance required from such vent connector to combustible material. Any material used to close up such opening shall be non-combustible.

~~(b)~~ D. When automatically operated appliances, such as water heaters are vented through natural draft ventilating hoods, dampers shall not be installed in the ventilating system. When the ventilating hood or exhaust system is equipped with power means of exhaust, the appliance control system shall be interlocked so as to permit appliance operation only when the power means of exhaust is in operation.

6. Appliances with Integral Vents.

~~(a)~~ A. Appliances incorporating integral venting means shall be considered properly vented when installed in accordance with their listings and the manufacturer's instructions.

~~(b)~~ B. Vent terminals of appliances using natural draft venting shall be located not less than 9 inches from any opening through which combustion products could enter the building. Vent terminals of appliances using forced draft venting shall be located not less than 12 inches from any opening through which combustion products could enter the building.

SBC 7409 is amended to read as follows:

SBC 7409 Chimney Connectors (Smoke Pipes) for Liquid and Solid Fuels.

1. Smoke Pipe Installation.

~~(a)~~ A. Each connector or breeching shall be provided with a proper damper conveniently located.

~~(b)~~ B. Each connector or breeching shall be welded, lock seamed or riveted, with all joints lapped not less than 1 1/2 inches and be rigidly secured; and shall have a proper thimble for making a tight connection to the chimney flue. To facilitate installation a flange connection or a draw band connection can be used.

SBC 7409 continued next page

SBC 7409 continued:

~~(c)~~ C. Connectors or breechings shall be supported by means of strap hangers spaced not less than 6 feet on centers. Wire hangers will not be permitted.

~~(d)~~ D. Each such connector or breeching shall be as short and direct to the chimney flue as possible and shall be installed with a pitch upward of not less than 1/4 inch per running foot.

~~(e)~~ E. Single-Wall metal pipe connectors shall not pass through any COMBUSTIBLE floor or be nearer than twelve inches (12") to any wood or other combustible portion of the building, except as noted below. All combustible materials within eighteen inches (18") shall be covered with a metal or asbestos shield extending at least one foot on each side of the connector pipe. Single-wall metal pipe connectors of a greater diameter than twelve inches (12") and of less area than six square feet (6 sq. ft.) shall be kept at least sixteen inches (16") away from any combustibles. Such combustibles shall be protected as before specified for the smaller smoke pipes, a distance of three feet (3') on each side of such smoke pipes.

~~(f)~~ F. Where single-wall metal pipes of twelve inches (12") or less in diameter pass through a wood or plastered stud partition, they shall be surrounded either by a body of brick, hollow tile, or other incombustible fireproof material of a thickness of at least four inches (4") around such smoke pipes, or they shall be surrounded by a sheet metal thimble of two concentric rings at least two inches (2") apart, and the entire thimble so constructed that there will be a free circulation of air between the two rings forming the same. Single-wall metal pipes of a diameter of six inches (6") or less may have thimbles with one inch (1") air space.

2. Single-Wall Metal Pipe Connections.

~~(a)~~ A. Chimneys shall not have connections in more than one story of a building, unless provision is made for effectively closing the openings with devices made of noncombustible materials whenever their use is discontinued temporarily and completely closing them with masonry when discontinued permanently.

SBC 7409 continued next page

SBC 7409 continued:

~~(b)~~ B. Two or more chimney connections shall not be joined for a single connection unless the common connector and chimney are of sufficient size to serve all the appliances thus connected.

~~(c)~~ C. The connector pipe serving a heating appliance shall not be connected into the chimney flue serving an incinerator which has the rubbish chute common with the chimney flue.

3. Connector Pipes, Weight of Metal.

~~(a)~~ A. For each steam or hot water boiler or warm air furnace installed under the provision of this Code, the area of the breeching or smoke pipe shall not be less than the area of the flue collar of the boiler or furnace to which it is connected.

~~(b)~~ B. Each such breeching or connector pipe shall be made of material equal in durability to galvanized sheet metal of thickness (Galvanized Sheet Gauge) for the various diameters of such smoke pipes, shall be not less than the following:

Diameter of Connector	Sheet Gauge No.
LESS than 10"	24
10" to 12"	22
14" to 16"	20
18" to 20"	18
22" to 24"	16

TABLE ~~1~~ 74-A CAPACITY OF TYPE B DOUBLE WALL VENTS SERVING A SINGLE APPLIANCE

Height H	Lateral L	Vent Diameter—D													
		3"	4"	5"	6"	7"	8"	10"	12"	14"	16"	18"	20"	22"	24"
		Maximum Appliance Input-Rating in Thousands of Btu per Hour													
6'	0	46	86	141	205	285	370	570	850	1170	1530	1960	2430	2950	3520
	2'	36	67	105	157	217	285	455	650	890	1170	1480	1830	2220	2650
	6'	32	61	100	149	205	275	435	630	870	1150	1470	1820	2210	2630
	12'	28	55	91	137	190	255	403	610	840	1110	1430	1795	2180	2600
8'	0	50	94	155	235	320	415	660	970	1320	1740	2220	2750	3330	4010
	2'	40	75	120	180	247	322	515	745	1020	1340	1700	2110	2560	3050
	8'	35	66	109	165	227	303	490	720	1000	1320	1670	2070	2530	3039
	16'	23	58	96	148	206	281	458	685	950	1260	1600	2035	2470	2960
10'	0	53	100	166	255	345	450	720	1060	1450	1925	2450	3050	3710	4450
	2'	42	81	129	195	273	355	580	850	1130	1480	1890	2340	2840	3390
	10'	36	70	115	175	245	330	525	795	1080	1430	1840	2250	2780	3340
	20'	NR	60	100	154	217	300	486	735	1030	1360	1780	2230	2720	3250
15'	0	58	112	187	285	390	525	840	1240	1720	2270	2900	3620	4410	5300
	2'	48	93	150	225	316	414	675	985	1350	1770	2260	2800	3410	4080
	15'	37	76	123	198	275	373	610	905	1250	1675	2150	2700	3300	3950
	30'	NR	60	107	169	243	328	553	845	1180	1550	2050	2620	3210	3840
20'	0	61	119	202	307	430	575	930	1350	1900	2520	3250	4050	4880	6000
	2'	51	100	166	249	346	470	755	1100	1520	2000	2570	3200	3910	4700
	10'	44	89	150	228	321	443	710	1045	1460	1940	2500	3130	3800	4500
	20'	35	78	134	206	295	410	665	990	1390	1880	2430	3050	3760	4450
	30'	NR	68	120	186	273	380	626	945	1270	1700	2230	2980	3650	4390
30'	0	64	128	220	336	475	650	1060	1550	2170	2920	3770	4750	5850	7050
	2'	56	112	185	280	394	535	865	1310	1800	2380	3050	3810	4650	5600
	20'	NR	90	154	237	343	473	784	1185	1650	2200	2870	3650	4480	5310
	40'	NR	NR	NR	200	295	415	705	1075	1520	2060	2700	3480	4270	5140
40'	0'	66	132	228	353	500	685	1140	1730	2400	3230	4180	5270	6500	7860
	2'	59	118	198	298	429	579	950	1420	2000	2660	3420	4300	5260	6320
	20'	NR	96	167	261	377	516	869	1310	1830	2460	3200	4050	5000	6070
	40'	NR	NR	NR	223	333	460	785	1205	1710	2310	3020	3840	4780	5820

Height H	Lateral L	3"	4"	5"	6"	7"	8"	10"	12"	14"	16"	18"	20"	22"	24"
		Maximum Appliance Input-Rating in Thousands of Btu per Hour													
60'	0	NR	136	236	373	535	730	1250	1920	2700	3650	4740	6000	7350	9000
	2'	NR	125	213	330	470	650	1060	1605	2250	3020	3920	4960	6130	7400
	30'	NR	NR	170	275	397	555	930	1440	2050	2780	3640	4700	5730	7000
	60'	NR	NR	NR	NR	334	475	830	1285	1870	2560	3380	4330	5420	6600
80'	0	NR	NR	230	384	550	755	1290	2020	2880	3900	5100	6450	8000	9750
	2'	NR	NR	217	350	495	683	1145	1740	2480	3320	4310	5450	6740	8200
	40'	NR	NR	NR	275	404	570	980	1515	2180	2080	3920	5000	6270	7650
	80'	NR	NR	NR	NR	NR	NR	850	1420	2000	2750	3610	4680	5850	7200
100'	0	NR	NR	NR	400	560	770	1310	2050	2950	4050	5300	6700	8600	10300
	2'	NR	NR	NR	375	510	700	1170	1820	2550	3500	4600	5800	7200	8800
	50'	NR	NR	NR	NR	405	575	1000	1550	2250	3100	4050	5300	6600	8100
	100'	NR	NR	NR	NR	NR	NR	870	1430	2050	2850	3750	4900	6100	7500

See figure 74-1 and notes for single appliance vents.

TABLE ~~2~~ 74-B CAPACITY OF SINGLE-WALL METAL PIPE OR TYPE B ASBESTOS CEMENT VENTS SERVING A SINGLE APPLIANCE

Height H	Lateral L	Vent Diameter—D							
		3"	4"	5"	6"	7"	8"	10"	12"
		Maximum Appliance Input Rating in Thousands of Btu per Hour							
6'	0	34	70	116	170	232	312	500	770
	2'	31	55	91	141	194	260	415	624
	5'	25	51	88	128	177	242	390	600
8'	0	42	76	126	185	252	340	542	815
	2'	32	61	102	154	216	284	451	680
	5'	29	56	95	141	194	264	430	648
	10'	27*	49	86	131	180	250	406	625
10'	0	45	84	138	202	276	372	606	912
	2'	35	67	111	168	233	311	505	760
	5'	32	61	104	153	215	289	480	724
	10'	27*	54	94	143	200	274	455	700
	15'	NR	46*	84	130	186	258	432	666
15'	0	49	91	151	223	312	420	684	1040
	2'	39	72	122	186	260	350	570	865
	5'	35*	67	110	170	240	325	540	825
	10'	30*	58*	103	158	223	305	514	795
	15'	NR	50*	93*	144	207	291	488	760
	20'	NR	NR	82*	132*	195	273	466	726
20'	0	53*	101	163	252	342	470	770	1190
	2'	42*	80	136	210	286	392	641	990
	5'	38*	71*	123	192	264	364	610	945
	10'	32*	65*	115*	178	246	345	571	910
	15'	NR	55*	101*	163	228	326	550	870
	20'	NR	NR	91*	149*	214*	306	525	832
30'	0	56*	108*	183	276	384	529	878	1370
	2'	44*	84*	148*	230	320	441	730	1140
	5'	NR	78*	137*	210	296	410	694	1080
	10'	NR	68*	125*	196*	274	388	656	1050
	15'	NR	NR	113*	177*	258*	366	625	1000
	20'	NR	NR	99*	163*	240*	344	596	960
	30'	NR	NR	NR	NR	192*	295*	540	890
50'	0	NR	120*	210*	310*	443*	590	980	1550
	2'	NR	95*	171*	260*	370*	492	820	1290
	5'	NR	NR	159*	234*	342*	474	780	1230
	10'	NR	NR	146*	221*	318*	456*	730	1190
	15'	NR	NR	NR	200*	292*	407*	705	1130
	20'	NR	NR	NR	185*	276*	384	670*	1080
	30'	NR	NR	NR	NR	222*	330*	605*	1010

See figure 74-1 and notes for single appliance vents.

TABLE ~~3~~ 74-C-CAPACITY OF MASONRY CHIMNEYS AND SINGLE-WALL VENT CONNECTORS SERVING A SINGLE APPLIANCE

Height H	Lateral L	SINGLE-WALL VENT CONNECTOR DIAMETER—D To be used with chimney areas not less than those at bottom							
		3"	4"	5"	6"	7"	8"	10"	12"
		Maximum appliance input rating in thousands of Btu per hour							
6'	2'	28	52	86	130	180	247	400	580
	5'	25*	48	81	118	164	230	375	560
8'	2'	29	55	93	145	197	265	445	650
	5'	26*	51*	87	133	182	245	422	638
	10'	22*	44*	79	123	169	233	400	593
10'	2'	31	61	102	161	220	297	480	722
	5'	28*	56	95	147	203	276	465	710
	10'	24*	49*	86	137	189	261	441	665
	15'	NR	42*	79*	125	175	246	421	634
15'	2'	35*	67	113	178	249	335	560	840
	5'	32*	61	105	163	230	312	531	825
	10'	27*	54*	96	151	214	294	504	774
	15'	NR	46*	87*	133	198	278	481	738
	20'	NR	NR	73*	128*	184	261	459	705
20'	2'	38*	73	123	200	273	374	625	950
	5'	35*	67*	115	183	252	348	594	900
	10'	NR	59*	105*	170	235	330	562	875
	15'	NR	NR	95*	156	217	311	536	835
	20'	NR	NR	80*	144*	202	292	510	800
30'	2'	41*	81*	136	215	302	420	715	1110
	5'	NR	75*	127*	196	279	391	680	1060
	10'	NR	66*	113*	182*	260	370	644	1020
	15'	NR	NR	105*	168*	240*	349	615	975
	20'	NR	NR	88*	155*	223*	327	585	932
	30'	NR	NR	NR	NR	182*	281*	544	865
50'	2'	NR	91*	150*	259*	350*	475	810	1240
	5'	NR	NR	149*	228*	321*	442	770	1220
	10'	NR	NR	135*	212*	301*	420*	723	1140
	15'	NR	NR	124*	195*	273*	395*	695	1080
	20'	NR	NR	NR	180*	258*	370*	660*	1040
	30'	NR	NR	NR	NR	NR	318*	610*	970
Minimum Internal Area of Chimney-A Square Inches		19		28	38	50	63	95	132

See figure 74-2 and notes for single appliance vents.

TABLE 4 74-D-CAPACITY OF TYPE B DOUBLE-WALL VENT SERVING TWO OR MORE APPLIANCES

Vent Connector Capacity

Total Vent Height	Connector	Vent Connector Diameter—D													
		3"	4"	5"	6"	7"	8"	10"	12"	14"	16"	18"	20"	22"	24"
6'	1'	20	40	72	104	142	186	289	416	577	735	930	1150	1425	1750
	2'	31	55	86	129	168	220	345	496	653	853	1080	1335	1610	1920
	3'	35	62	96	139	189	248	386	556	740	967	1225	1510	1839	2150
8'	1'	27	48	76	109	148	194	303	430	601	805	1015	1255	1520	1810
	2'	32	57	90	129	175	230	358	516	696	910	1150	1420	1720	2050
	3'	36	64	101	145	198	258	402	580	790	1030	1305	1610	1950	2320
10'	1'	28	50	78	113	154	200	314	452	642	840	1060	1310	1585	1890
	2'	33	59	93	134	182	238	372	436	730	955	1205	1490	1800	2150
	3'	37	67	104	150	205	268	417	600	827	1080	1370	1690	2040	2430
15'	1'	30	53	83	120	163	214	333	480	697	910	1150	1420	1720	2050
	2'	35	63	99	142	193	253	394	568	790	1030	1305	1610	1950	2320
	3'	40	71	111	160	218	286	444	640	898	1175	1485	1835	2220	2640
20'	1'	31	56	87	125	171	224	347	500	740	965	1225	1510	1830	2190
	2'	37	66	104	149	202	265	414	596	840	1095	1385	1710	2070	2470
	3'	42	74	116	168	228	300	466	672	952	1245	1575	1945	2350	2800
30'	1'	33	59	93	134	182	238	372	536	805	1050	1330	1645	1990	2370
	2'	39	70	110	158	215	282	439	632	910	1190	1500	1855	2240	2670
	3'	44	79	124	178	242	317	494	712	1035	1350	1710	2110	2550	3040
40'	1'	35	62	97	140	190	248	389	560	850	1110	1405	1735	2100	2500
	2'	41	73	115	165	225	295	461	665	984	1260	1590	1965	2380	2839
	3'	46	83	129	187	253	331	520	748	1100	1435	1820	2240	2710	3230
60' to 100'	1'	37	66	104	150	204	266	417	600	926	1210	1530	1890	2230	2720
	2'	44	79	123	178	242	316	494	712	1050	1370	1740	2159	2590	3090
	3'	50	89	138	200	272	355	555	800	1193	1565	1930	2450	2980	3520

TABLE ~~4A~~ 74-D-1

COMMON VENT CAPACITY

Total Vent Height "H"	Common Vent Diameter													
	3"	4"	5"	6"	7"	8"	10"	12"	14"	16"	18"	20"	22"	24"
	Combined Appliance Input Rating in Thousands of Btu per Hour													
6'	—	65	103	147	200	260	410	588	815	1065	1345	1660	1970	2390
8'	—	73	114	163	223	290	465	652	912	1190	1510	1860	2260	2680
10'	—	79	124	173	242	315	495	712	995	1300	1645	2030	2400	2920
15'	—	91	144	206	280	365	565	825	1158	1510	1910	2360	2790	3400
20'	—	102	160	229	310	405	640	916	1290	1690	2140	2640	3120	3800
30'	—	118	185	266	360	470	740	1025	1525	1990	2520	3110	3680	4480
40'	—	131	203	295	405	525	820	1180	1715	2240	2830	3500	4150	5050
60'	—	NR	224	324	440	575	900	1380	2010	2620	3320	4100	4850	5900
80'	—	NR	NR	344	468	610	955	1540	2250	2930	3710	4590	5420	6600
100'	—	NR	NR	NR	479	625	975	1670	2450	3200	4050	5009	5920	7200

See figure 74-3 and notes for multiple appliance vents.

TABLE No.-5 74-E

CAPACITY OF A SINGLE-WALL METAL PIPE OR TYPE B ASBESTOS CEMENT VENT SERVING TWO OR MORE APPLIANCES

Vent Connector Capacity

Total Vent Height "H"	Connector Rise "R"	Vent Connector Diameter—D					
		3"	4"	5"	6"	7"	8"
		Maximum Appliance Input Rating in Thousands of Btu per hour					
6'-8'	1'	21	40	68	102	146	205
	2'	28	53	86	124	173	235
	3'	34	61	98	147	204	275
15'	1'	23	44	77	117	179	240
	2'	30	56	92	134	194	265
	3'	35	64	102	155	216	298
30' and up	1'	25	48	84	129	190	270
	2'	31	58	97	145	211	295
	3'	36	68	107	164	232	321

Common Vent Capacity

Total Vent Height "H"	Common Vent Diameter						
	4"	5"	6"	7"	8"	10"	12"
	Combined Appliance Input Rating in Thousands of Btu per hour						
6'	48	78	111	155	205	320	NR
8'	55	89	128	175	231	365	505
10'	59	95	136	190	250	395	560
15'	71	115	168	228	305	480	690
20'	80	129	186	260	340	550	790
30'	NR	147	215	300	400	650	940
50'	NR	NR	NR	360	490	810	1190

See figure 74-3 and notes for multiple appliance vents.

Table No.-6 74-F

CAPACITY OF A MASONRY CHIMNEY AND SINGLE-WALL VENT CONNECTORS SERVING TWO OR MORE APPLIANCES

Single-Wall Vent Connector Capacity

Total Vent Height "H"	Rise Connector "R"	Vent Connector Diameter—D					
		3"	4"	5"	6"	7"	8"
		Maximum Appliance Input Rating in Thousands of Btu per hour					
6'-8'	1'	21	39	66	100	140	200
	2'	28	52	84	123	172	231
	3'	34	61	97	142	202	269
15'	1'	23	43	73	112	171	225
	2'	30	54	88	132	189	256
	3'	34	63	101	151	213	280
30' and up	1'	24	47	80	124	183	250
	2'	31	57	93	142	205	282
	3'	35	65	105	160	229	312

Common Chimney Capacity

Total Vent Height "H"	Minimum Internal Area of Chimney—"A" Square Inches					
	10	28	38	50	78	113
	Combined Appliance Input Rating in Thousands of Btu per hour					
6'	45	71	102	142	245	NR
8'	52	81	118	162	277	405
10'	56	89	129	175	309	450
15'	66	105	150	210	360	540
20'	74	120	170	240	415	610
30'	NR	135	195	275	490	710
50'	NR	NR	NR	325	590	910

See figure 74-4 and notes for multiple appliance vents.

TABLE No.-7 74-G

TABLE FOR REDUCING CLEARANCES

Clearances, Inches, With Specified Forms of Protection.*

Type of Protection Applied to the combustible material and covering all surfaces within the distance specified as the required clearance with no protection. ~~(See figure 74-1)~~ are minimum.	Where the required Clearance with no protection is: 36 inches	18 inches	9 inches	6 inches
	Thicknesses			
(a) ¼ in. asbestos millboard spaced out 1 in.†	30	12	6	3
(b) 28 gage sheet metal on ¼ in. asbestos millboard	24	12	4	2
(c) 28 gage sheet metal spaced out 1 in.†	18	9	4	2
(d) 28 gage sheet metal on ⅛ in. asbestos millboard spaced out 1 in.†	18	9	4	2
(e) ¼ in. asbestos millboard on 1 in. mineral wool bats reinforced with wire mesh or equivalent	18	6	4	2
(f) 22 gage sheet metal on 1 in. mineral wool bats reinforced with wire or equivalent	12	3	2	2

*All clearances shall be measured from the outer surface of the connector to the combustible material disregarding any intervening protection applied to the combustible material but in no case shall the clearance be such as to interfere with the requirements for accessibility.

†Spacers shall be of noncombustible material.

Table No.-8 74-H

Chimney Connector and Vent Connector Clearances from Combustible Materials

Description of Appliance	Minimum Clearance, Inches (See Note 1)
RESIDENTIAL TYPE APPLIANCES	
Column 1, Appendix A	
Single-Wall Metal Pipe Connectors	
Gas Appliances Without Draft Hoods	18
Electric, Gas, and Oil Incinerators	18
Oil and Solid-Fuel Appliances	18
Unlisted Gas Appliances With Draft Hoods	9
Boilers and Furnaces Equipped With Listed Gas Burners and With Draft Hoods	9
Oil Appliances Listed as Suitable For Use With Type L Venting Systems, but only when connected to chimneys.	9
Listed Gas Appliances With Draft Hoods. See Note 3.	6
Type L Venting System Piping Connectors	
Gas Appliances Without Draft Hoods	9
Electric, Gas, and Oil Incinerators	9
Oil and Solid-Fuel Appliances	9
Unlisted Gas Appliances With Draft Hoods	6
Boilers and Furnaces Equipped With Listed Gas Burners and With Draft Hoods	6
Oil Appliances Listed As Suitable For Use With Type L Venting Systems	(See Note 2)
Listed Gas Appliances With Draft Hoods	(See Note 3)
Column 1, Appendix B	
Type B Gas Vent Piping Connectors	
Listed Gas Appliances With Draft Hoods	(See Note 3)
COMMERCIAL-INDUSTRIAL TYPE APPLIANCES	
Low-Heat Appliances	
Column 2, Appendix A	
Single-Wall Metal Pipe Connectors	
Gas, Oil, and Solid-Fuel Boilers, Furnaces, and Water Heaters	18
Ranges, Restaurant Type	18
Oil Unit Heaters	18
Unlisted Gas Unit Heaters	18
Listed Gas Unit Heaters With Draft Hoods	6
Other Low-Heat Industrial Appliances	18
Medium-Heat Appliances	
Column 3, Appendix A	
Single-Wall Metal Pipe Connectors	

NOTE 1: These clearances apply except if the listing of an appliance specifies different clearance, in which case the listed clearance takes precedence.

NOTE 2: If listed Type L venting system piping is used, the clearance may be in accordance with the venting system listing.

NOTE 3: If listed Type B or Type L venting system piping is used, the clearance may be in accordance with the venting system listing.

The clearances from connectors to combustible materials may be reduced if the combustible material is protected in accordance with Table 74-~~F~~ G

Chapter 74 is amended by adding a new table to read as follows:

TABLE 74-J

Size of Vent Pipe					
Dia. Flue Inches	*Area of Flue Square Inches*	*Maximum BTU Input Per Hour*	*Dia. Flue Inches*	*Area of Flue Square Inches*	*Maximum BTU Input Per Hour*
3	7	53,000	12	113.0	848,000
4	12.5	94,000	13	132.7	995,000
5	19.6	147,000	14	153.9	1,155,000
6	28.2	212,000	15	176.7	1,325,000
7	38.4	289,000	16	201.0	1,508,000
8	50.2	377,000	17	227.0	1,692,000
9	63.6	477,000	18	254.4	1,908,000
10	78.5	589,000	19	283.5	2,126,000
11	95.0	713,000	20	314.1	2,356,000

TABLE ~~OF-CLEARANCES~~ 74-K

VENT CONNECTOR CLEARANCES REQUIRED FOR GAS APPLIANCES

	Maximum Distance from Combustible Material	
Appliance	Listed Type B Gas Vent Material	Vent Connectors of Other than Type B Material
Listed Boiler	As listed	6 inches
Listed Warm Air Furnace...	As listed	6 inches
Listed Water Heater.....	As listed	6 inches
Listed Room Heater.....	As listed	6 inches
Listed Floor Furnace.....	As listed	6 inches
Listed Incinerator	Not Permitted	18 inches
Listed Conversion burner (with draft hood).....	6 inches	9 inches
Unlisted Appliances having draft hoods	6 inches	9 inches
Unlisted Appliances without draft hoods	Not Permitted	18 inches

SIZING OF VENTING SYSTEMS SERVING APPLIANCES EQUIPPED WITH DRAFT HOODS

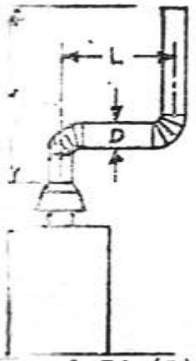

Figure ~~1~~ 74-(1)

Double Wall or Asbestos Cement Type B Vents or Single-Wall Metal Vents Serving a Single Appliance. (See Tables ~~1-and-2~~ 74-A and B)

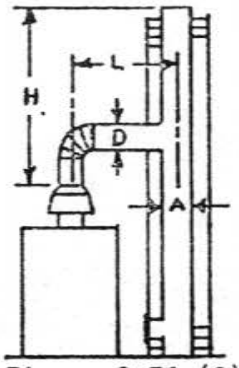

Figure 2 74-(2)

Masonry Chimney Serving a Single Appliance. (See Table ~~3~~ 74-C)

NOTES FOR SINGLE APPLIANCE VENTS. (See Tables ~~1,-2-and-3~~ 74-A, B, and C.

(1) In no case shall the vent serving gas burning equipment be smaller in size than the draft hood outlet.

(2) "0" Zero lateral "L" applies only to a straight vertical vent attached to a top outlet draft hood.

(3) Designation "NR" in Tables ~~1,-2-and-3~~ 74-A, B and C indicates not recommended.

(4) Number followed by an asterisk (*) in Tables ~~2-and-3~~ 74-B and C indicate the possibility of continuous condensation, due to the flue gas temperature falling below the dew point temperature at some point in the vent or chimney.

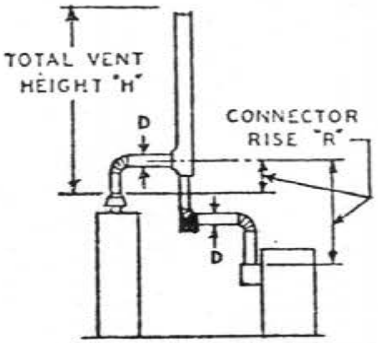

Figure ~~3~~ 74-(3)

Double-Wall or Asbestos Cement Type B Vents or Single-Wall Metal Vents Serving Two or More Appliances. (See Tables ~~4-and-5~~ 74-D and E.)

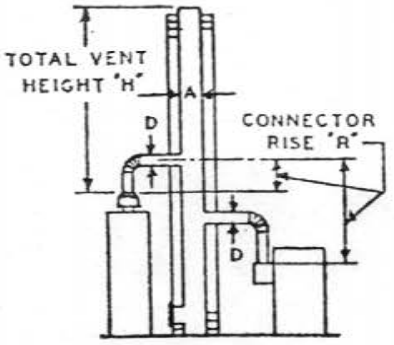

Figure-4- 74-(4)

Masonry Chimney Serving Two or More Appliances. (See Table ~~6~~ 74-F.)

NOTES FOR MULTIPLE APPLIANCE VENTS. (See Tables ~~4,-5-and-6~~ 74-D, E, and F.

1. Maximum Vent Connector Length 1½ feet for every inch of connector diameter. Greater lengths require increase in size, rise or total vent height, to obtain full capacity.

2. Each 90-degree turn in excess of the first two reduces the connector capacity by 10 per cent (10%).

3. Each 90-degree turn in the common vent reduces capacity by 10 per cent (10%).

4. Where possible, locate vent closer to or directly over smaller appliance connector.

5. Connectors must be equal to or larger than draft hood outlets.

6. If both connectors are same size, common vent must be at least one size larger, regardless of tabulated capacity.

7. Common vent must be equal to or larger than largest connector.

8. Interconnection fittings must be same size as common vent.

9. Use sea level input rating when calculating vent size for high altitude installation.

10. Designation "NR" in Tables ~~4,-5-and-6~~ 74-D, E and F indicates not recommended.

EXAMPLE OF MULTIPLE VENT DESIGN USING TABLE ~~4~~ 74-D and D-1
DOUBLE WALL TYPE B VENT

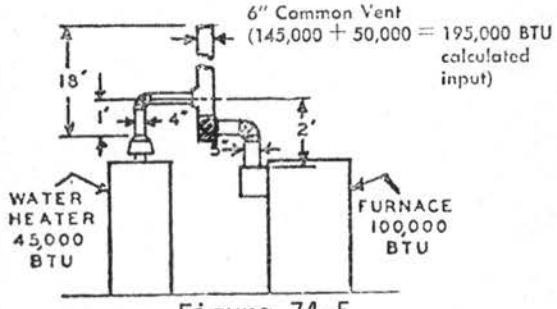

Figure 74-5

EXAMPLE: Connect a 45,000 BTU water heater with a 1 foot connector rise "R" and a 100,000 BTU furnace with a 2 foot connector rise "R" to a common vent with a minimum total vent height "H" of 18 feet. See Figure 5.

1. WATER HEATER VENT CONNECTOR SIZE.

Using Table 4 74-D, read down Total Vent Height "H" column to 15 feet and read across 1 foot connector rise "R" line to BTU rating equal to or higher than water heater input rating. This figure shows 53,000 BTU and is in the column for four-inch connector. Since this is in excess of the water heater input it is not necessary to find the maximum input for an 18 foor minimum total vent height. Use a four-inch connector.

2. FURNACE VENT CONNECTOR SIZE.

Under Vent Connector Tables read down Total Vent Height "H" column to 15 foot and read across 2 foot Connector Rise "R" line. Note 5 inch vent size shows 99,000 BTU per hour or less than furnace input. However, with 20 foot Total Height read across 2 foot connector rise line. Note 5 inch vent size shows 104,000 BTU per hour. Since 18 foot height is 3/5th of difference between 15 and 20 foot heights take difference between 99,000 and 104,000 or 5,000 and add 3/5ths of this to 15 foot figure of 99,000, 99,000+ 3,000=102,000 which is maximum input for 18 foot Total Vent Height. Therefore a 5 inch connector would be the correct size for the furnace, providing the furnace had a 5 inch or smaller draft hood outlet.

3. COMMON VENT SIZE.

Adding 50,000 BTU to the input of 45,000 BTU for the water heater and 100,000 BTU input for the furnace gives a total calculated input to the Common Vent of 195,000 BTUs.

Note that for 15 foot Total Vent Height "H" maximum BTU input for 6 inch vent is 206,000. Therefore the common vent must be 6 inch.

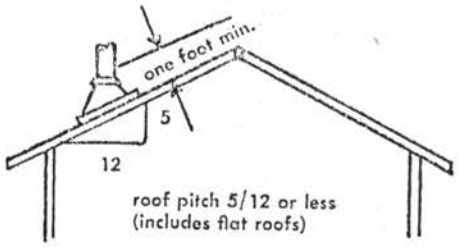

A ROOF PITCH 5'/12' (22½°) OR LESS.
Maintain minimum clearance of 12 inches as illustrated.

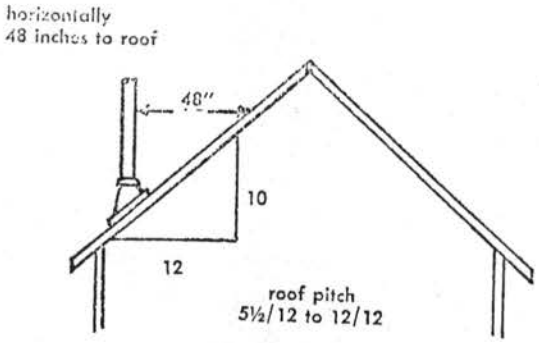

B ROOF PITCH 5½'/12' AND UP TO 12'/12' (45°)
Maintain 48 inches horizontal distance from lowest top opening and roof surface.

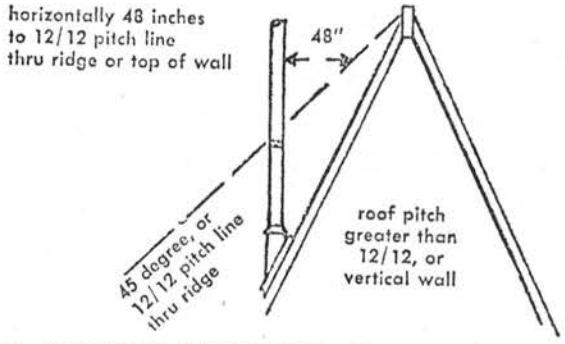

C ROOF PITCH GREATER THAN 12'/12'
Maintain 48 inches distance from 45° pitch line through roof ridge.

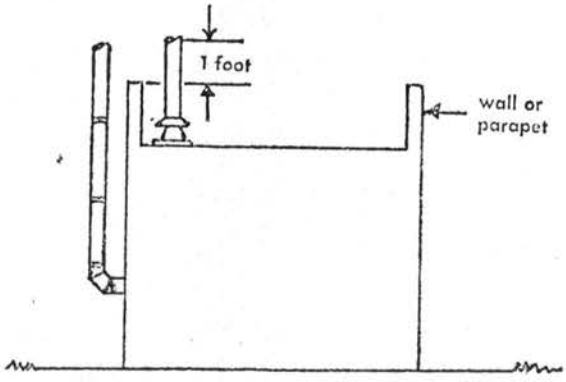

D VENT WITHIN 30 INCHES OF VERTICAL WALL, parapet, or roof ridge. Top should be located one foot above wall or ridge.

Figure 74-6

SBC 7503 Has been editorially changed.

SBC 7503 Definitions. For the purpose of this Code, the following terms shall mean:

MECHANICAL WARM AIR HEATING PLANT. One or more warm air furnaces enclosed within casings, together with necessary appurtenances thereto, consisting of warm air supply pipes and fittings, cold air or recirculating pipes, ducts, boxes and fittings, smoke pipes, dampers and registers, grilles, fans, or blowers, the same being intended for heating the buildings in which they may be installed. The circulation of air within such a system shall be dependent upon the motive power furnished by a fan or blower, and the duct work in connection therewith shall be designed especially for such system. However, the incorporation of a booster fan, blower or any power driven device for the purpose of accelerating the air circulation in a gravity warm air heating plant shall be construed as changing the classification of such gravity system to a mechanical system.

~~(a)~~ The incorporation of an air washer, filters, humidifier, cooling coils, automatic controls or other devices shall not be construed as changing the classification of such a system unless by incorporation of some one or more of the above, mentioned devices such system fulfills the requirements of one of the classifications immediately following.

WARM AIR ALL-YEAR AIR CONDITIONING SYSTEM. Includes a mechanical warm-air heating plant, ~~such as hereinbefore defined~~, together with such other devices and such automatic controls as will secure the simultaneous control of the temperature, motion, humidity, and a reduction in the dust and odor content, of the air employed in the ventilation of rooms. This includes both warming and humidifying in winter and cooling and dehumidifying in summer.

WARM AIR WINTER AIR CONDITIONING SYSTEM. Includes a mechanical warm air heating plant, ~~such as hereinbefore defined~~, together with such other devices and such automatic controls as will secure the simultaneous control of the temperature, motion, humidity, and a reduction in the dust and odor content, of the air employed in the ventilation of rooms, but not provided with such devices and automatic controls as will provide for cooling and dehumidifying in summer.

SBC 7504 Numbering has been editorially changed.

SBC 7504 Amount of Air Circulated. The amount of air to be provided for each room or space to be heated or conditioned shall be not less than that determined in the following manner:

~~(1)~~ 1. Calculate the heat loss, in BTU per hour, for each room or space to be heated, as set forth in ~~Chapter~~ 73. SBC CHAPTER 73

~~(2)~~ 2. Calculate the volume of air to be circulated to each room or space to be heated, using the formula:

$$Q = \frac{H}{68.7}$$

Where:
Q=Volume of air in cubic feet per minute.

H=Calculated heat loss in BTU per hour.

68.7=A constant based on supply air temperature of 135°F. and return air temperature of 65° F.

The above formula is based on actual BTU per hour heat loss plus 10% safety factor.

SBC 7505 Numbering has been editorially changed.

SBC 7505 Duct Design

~~(1)~~ 1. Ducts may either be round or rectangular. Rectangular ducts should be as nearly square as possible. Aspect ratios greater than 8 to 1 shall not be exceeded and where possible, a ratio of 4 to 1 or less should be maintained. The radii of elbows shall be not less than one-half the pipe diameter, for round pipes, or the equivalent round pipe size in the case of rectangular ducts. However, in old buildings, where strict compliance with the foregoing provisions in regard to the elbows would be impracticable, special permission may be granted for deviations.

~~(2)~~ 2. The ducts or piping may be designed either as a trunk line system or as a system of individual ducts from the furnace to each register. Individual ducts may be grouped to simulate a trunk duct system in appearance.

~~(3)~~ 3. Calculate the sizes of all main and branch ducts by either of the following methods:

~~(a)~~ A. VELOCITY METHOD: Arbitrarily fix the velocity in the various sections, reducing the velocity from the point of leaving the fan to the point of discharge to the room. In this case the pressure loss of each section of the duct is calculated separately and the total loss is found by adding together the losses of the various sections.

~~(b)~~ B. FRICTION PRESSURE LOSS METHOD: Proportion the duct for equal friction pressure loss per foot of length.

SBC 7507 Has been editorially changed.

SBC 7507 Maximum Allowable Velocities. The air velocities, in feet per minute, shall not be exceeded in the various types of installations to which they apply. (See SBC Chapter ~~75~~ 77 Table No. ~~4~~ ~~75~~ -D) 77

SBC 7513 Numbering has been editorially changed.

SBC 7513 Size of Furnace

~~(1)~~ 1. Add together the hourly BTU heat losses of the various rooms of the building or space to be heated, as determined by the calculated requirements set forth in Chapter 73. For continuously heated buildings, install a furnace with a capacity or register delivery not less than that determined. For intermittently heated buildings, add from 25% to 150% of the net calculated heat loss.

~~(2)~~ 2. Hand-fired furnaces, converted to gas, oil, or stoker firing and having a ratios of heating surface to grate area greater than 15 to 1, register delivery equals 2265 x S.

~~(3)~~ 3. Hand-fired furnaces with ratios of heating surface to grate area greater than 15 to 1 and less than 25 to 1, register delivery equals 2265 x S.

7513 Con

~~(4)~~ 4. Hand-fired furnaces, with ratios of heating surface to grate area in excess of 25 to 1, register delivery equals 2265 x 25 x G.

WHERE:
Register Delivery is in terms of BTU per hour.
S=Heating surface in square feet.
G=Actual grate area, in square feet.

SBC 7514 Numbering has been editorially changed.

SBC 7514 Gas, Oil, Electric or Stoker Fired Furnaces. The register delivery or net output rating expressed in BTU per hour/of an automatically fired furnace designed for the exclusive use of but one fuel shall be determined by means of the following:

~~(1)~~ 1. For gas-fired forced air furnaces the register delivery shall be 0.65 times the input in BTU per hour.

~~(2)~~ 2. For gas-fired unit heaters the register delivery shall be 0.75 times the input in BTU per hour.

~~(3)~~ 3. For oil-fired forced air furnaces the register delivery shall be 2265 times the heating surface in square feet.

~~(4)~~ 4. For stoker-fired forced air furnaces, the register delivery shall be 2265 times the heating surface in square feet.

~~(5)~~ 5. For electric forced air furnaces the register delivery shall be 0.85 times the input in BTU per hour.

SBC 7515 is amended to read as follows:

SBC 7515 Furnace Foundations

~~(1)~~ 1. Furnace foundations of brick, ~~cement~~ CONCRETE, or other NON combustible material shall be provided.

~~(2)~~ 2. Where it is necessary to place a furnace on a combustible floor, not less than 4 inches of hollow tiles shall be used, having joints matched in such a way that air passage will be free from side to side. Such foundation shall be constructed upon and covered with continuous sheet metal plates, of weight not less than 24 U.S. Standard Gauge Metal, having all joints riveted or double seamed and the bottom of the sheet to have all edges turned up at least one inch. This floor covering shall extend under the whole

7515 CONT

of the fire box of the furnace and outwardly not less than 12 inches on all sides and rear of casing, or base ring, and 36 inches in front.

~~(3)~~ 3. ~~Warm-air-furnaces-manufactured-and-with-underwriters-approval for-mounting-directly-on-combustible-materials-are-approved for-such-installations.~~ No combustible furnace foundations shall not be required when the furnace is listed by an approved agency, for mounting on a combustible surface.

7516 NO CHANGE

SBC 7517 Numbering has been editorially changed.

SBC 7517 Basic Controls. Mechanical warm air heating and air conditioning systems shall be equipped with automatic controls capable of performing at least the following minimum functions:

~~(1)~~ 1. OIL FIRED FURNACES. At least 3 controls shall be employed as follows: Control No. 1 will stop the burner when the room temperature is too high and No. 2 will stop the burner when the temperature of the air in the plenum chamber or mainduct exceeds the setting of Control No. 2. Both temperatures must be below their respective settings to start the burner. Control No. 3 responds to the flame temperature and in conjunction with the control switch acts as a safety to stop the burner if the latter fails to ignite or burn properly as demanded by Controls No. 1 and 2.

~~(2)~~ 2. Gas-Fired Furnace. Shall employ Controls No. 1 and No. 2 as for oil fired furnaces. Either a thermostatic pilot, so constructed and adjusted that no gas can flow through the main burner unless the pilot flame is burning, or some other type of safety device serving this same end shall be employed. The operation of this safety device shall not depend on the closing of an electrical circuit to shut off the main gas supply. A gas pressure regulator shall be installed in accordance with ~~Chapter 79~~.

SBC 8025

7518 M.C.

SBC 7519 Numbering has been editorially changed.

SBC 7519 Warm Air Furnace Standards

~~(1)~~ 1. Gas-Fired Furnaces.

~~(a)~~ A. All gas-fired furnaces shall be rated in accordance with the American Standard Approval Requirements for Central Heating Gas Appliances, Vol. II, Gravity and Forced Air Central Furnaces ANSI Z21.47 and ANSI Z21.47a.
1971 ED 1972 ED

~~(b)~~ B. All gravity furnaces approved by the American Gas Association under these requirements are assigned a rating based on 75% efficiency and forced air furnaces are assigned a rating based on 80% efficiency.

~~(2)~~ 2. Oil-Fired Furnaces.

~~(a)~~ A. Oil-fired furnaces equipped with pressure atomizing or rotary burners shall be rated in accordance with Commercial Standard 195.

~~(b)~~ B. Furnaces equipped with pot-type oil burners should be rated in accordance with Commercial Standards 104.

~~(c)~~ C. Oil-burning floor furnaces should be rated in accordance with Commercial Standard 113.

~~(d)~~ D. Oil furnaces which come as complete packages, including the burner and control equipment, shall be identified as follows:

~~(1)~~ 1. Pressure-type or rotary burners included as a part of the package should bear the Underwriters' Laboratories label showing compliance with UL 296 and Commercial Standard Label C.S. 75.

~~(2)~~ 2. The complete furnace should bear the UL 727 label and so listed. It may also be certified by the manufacturers as complying with Commercial Standard 195.

~~(3)~~ 3. Vaporizing burner furnaces should also be listed under U.L. 727 and C.S. 104.

SBC 7602 is amended to read as follows:

SBC 7602 Definitions.

ACCESSIBLE INSTALLATION means to be accessible, such as exposed in shafts, tunnels, or concealed by readily removable enclosing construction.

AIR BREAK (DRAINAGE SYSTEM). A piping arrangement in which a fixture, appliance, or device is protected from backflow by discharging at or below the flood level rim of another fixture or receptacle whose flood level rim is lower than the bottom of the protected fixture, appliance, or device.

AIR GAP (DRAINAGE SYSTEM). The unobstructed vertical distance through the free atmosphere between the outlet of a waste pipe and the flood level rim of the fixture or receptacle into which it is discharging.

AIR GAP (WATER DISTRIBUTION SYSTEM). The unobstructed vertical distance through the free atmosphere between the lowest opening from any pipe or faucet supplying water to a tank, plumbing fixture or other device, and the flood level rim of the receptacle.

ALTERATION-changes, replacements, additions, or removal of components of a system with resulting significant effect on the performance of the system or its parts.

A.S.H.R.A.E.-refers to the American Society of Heating, Refrigeration, and Air Conditioning Engineers.

A.S.M.E.-refers to the American Society of Mechanical Engineers.

A.S.T.M.-refers to the American Society of Testing Materials.

BACKFLOW. The flow of water or other liquids, mixtures, or substances into the distributing pipes of the potable supply of water, from any source or sources other than its intended source. Backsiphonage is one type of backflow.

BACKFLOW CONNECTION. Any condition whereby backflow can occur.

BACKFLOW PREVENTER. A device or means to prevent backflow into the potable water system.

7602 cont

760.2 CONT

BLOW-OFF is a connection to a boiler or other device for the purpose of the blow-down of scale, sludge, etc.

BOILER BLOW-OFF. An outlet on a boiler to permit emptying or discharge of sediment.

BOILER BLOW-OFF TANK. A vessel designed to receive the discharge from a boiler blow-off outlet and to cool the discharge to a temperature which permits its safe discharge to the drainage system.

CAPILLARY BRAZING refers to the joining of tube and socket designed fittings, with proper tolerances, for the capillary attraction of a brazing alloy above 1,000°F., melting temperature.

CONVERTOR-a device which transfers heat from one gas or liquid to another gas or liquid wherein there is no direct contact between the two gases or liquids.

COOLING PIPING AND EQUIPMENT. The term cooling piping and equipment shall include all piping and equipment containing water or other liquid and designed and installed for the purpose of cooling in connection with any air conditioning or other process but shall not include cooling piping and equipment in which a refrigerant is used.

DISTRICT HEATING OR COOLING refers to the supply of heat or cooling from a central plant to a group of buildings.

DRAIN CONNECTION is the connection for emptying a boiler or system.

F.S.-refers to Federal Specifications.

HEAT EXCHANGER-see CONVERTOR.

INACCESSIBLE INSTALLATION refers to those sections of piping systems installed in walls, floors, ceilings and other areas where access cannot be made without the removal of permanent construction.

INDIRECT WASTE PIPE. A waste pipe that does not connect directly with the drainage system but conveys liquid wastes by discharging into a plumbing fixture or receptacle which is directly connected to the drainage system.

7602 cont

INDUSTRIAL WASTES. Liquid or water borne waste from industrial or commercial processes except domestic sewage.

INTERFACE. The surface that lies between two dissimilar parts of matter or space forming their common boundary.

LIQUID PIPING SYSTEM shall mean a system in which water or other liquid is used as the medium by which heat is carried through pipes from the supply source to or from the heating or cooling units.

LIQUID WASTE. The discharge from any fixture, appliance, or appurtenance which does not receive fecal matter.

MAY. Means optional.

MULTIPLE DWELLING SYSTEM. The term multiple dwelling refers to those heating systems serving three or more living units from the same source.

PERMANENT. Means lasting or intended to last.

SHALL. Means mandatory.

SHOULD. Means to be recommended.

SPECIAL WASTES. Wastes which require special treatment before entry into the normal plumbing system.

STEAM HEATING SYSTEM shall mean a heating system in which heat is transferred from a source of steam to steam heating units at, above or below atmospheric pressure.

STEAM PIPING SYSTEM shall mean a system in which steam is transferred from a source to a steam utilizing device at, above or below atmospheric pressure for a purpose other than for heating a building or other structure.

TEMPERATURE. All reference to temperatures are for Fahrenheit scale.

UNDERGROUND. Underground installations shall include those pipes buried in slabs, embedded in concrete or masonry materials ~~all below ground.~~

WATER OUTLET. A discharge opening through which water is supplied to a boiler condenser, heating system, cooling system, or to any devices or equipment requiring water to operate.

7603

SBC 7603 is amended to read as follows:

SBC 7603 Boilers.

1971

~~(1)~~ 1. Construction. All boilers shall be constructed in accordance with Section IV of the ~~current~~ edition, of the A.S.M.E. Boiler and Pressure Vessel Code, or the Power Boiler Code, Section I.

~~(2)~~ 2. Capacity.

~~(a)~~ A. Selection. ~~Heating~~ Boilers shall be selected commensurate with the gross load imposed on the boiler. The general factors to be considered are as follows:

~~(1)~~ 1. Radiation load - The estimated heat emission in BTU of the connected radiation and such heat emission shall at least equal the calculated heat loss of the space to be heated. See Chapter 73.

~~(2)~~ 2. Hot ~~water supply load~~ LIQUID and or STEAM - The estimated maximum heat in BTU, required to heat ~~water~~ LIQUID or STEAM for purposes other than space heating.

~~(3)~~ 3. Piping loss load - The estimated heat emission in BTU from the piping which connects the radiation to the boiler.

~~(4)~~ 4. Pick up allowance - The estimated increase in the normal load in BTU caused by the heating up of the cold system.

Items (1) and (2) of the foregoing constitute what is known as the "net load".

HYDRONICS INSTITUTE

The boiler capacity to be installed shall be as published by the ~~Institute of Boiler and Radiator Manufacturers~~, the Steel Boiler Institute, or the Mechanical Contractors Association of America.

In the determination of boiler capacity, consideration shall be given to conditions which could give rise to special problems of piping loss and pick up load. Also, the possibility of efficiencies other than the 80% usually credited to automatically fired boilers must be taken into account.

7603 Cont

In the case of electric heat boilers, the efficiency can be taken as 100% but the piping loss load and pick up allowance shall be considered the same as for boilers using fossil fuels.

SBC 7604 is amended to read as follows:

SBC 7604 System Design. System design features and the sizing of steam, hot and chilled water and/or liquid piping systems shall be consistent with the practices presented in the ~~American Society of Heating, Refrigeration, and Air Conditioning~~ A.S.H.R.A.E Guide, 1973 Edition. ~~Copies of which are on file in the Department of Administration.~~

SBC 7605 is amended to read as follows:

SBC 7605 Manufacturer's ~~Recommendation~~. Minimum Requirements. All equipment and materials shall be installed at least in accordance with the manufacturer's ~~recommendations~~ minimum requirements, subject to the approval of the administrative authority. However, in the case of conflict between a manufacturer's ~~recommendation~~ minimum requirement and the limitations or provisions of this Code, this Code shall supersede.

SBC 7606 is amended to read as follows:

SBC 7606 Material Standards. The material ~~standards~~ listed in Annex 76-I to this chapter shall conform ~~at least~~, to the standards cited when used within the scope of this Code for the construction, installation, alteration or repair of any part of a system. These materials do not require further approval when used in accordance with manufacturer's directions and in accordance with the provisions of this Code. Other materials may be used, which for the intended installation, have physical properties consistent with the goals of safety, durability, non-pollution, building preservation, and human health and welfare provided that they meet the requirements set out in SBC 7205.

7604 Cont

7606 CONT

~~(1)~~ 1. Insofar as is the custom or practice of manufacturers, all materials must be marked and suitably identified so as to provide a visual means of identification as to types, grades, weights and strengths. This shall be accomplished as part of the manufacturing process.

~~(2)~~ 2. The installer will position the above identification marks so as to provide the easiest inspection by the administrative authority within the limits of practicability.

~~(3)~~ 3. All materials should be handled carefully so as to avoid damage. No defective or damaged materials, equipment, nor apparatus shall be knowlingly installed.

~~(4)~~ 4. In using the materials approved, provisions of SBC ~~7609~~ 7610 in joints and connections shall be strictly observed.

~~(5)~~ 5. The manufacturers working pressure rating of all system components shall be in excess of the highest operating pressure at any point in the system, and the test pressure rating shall be one and a half times the working pressure. In no case shall materials having a working of less than 100 psig be used underground or be inaccessible.

PRESSURE

7607 N.C.

SBC 7608 Numbering has been editorially changed.

SBC 7608 Application of Materials (Inaccessible Installations). The following limitations are placed on materials in Annex 76-I when used for inaccessible installations:

~~(1)~~ 1. No cast brass or bronze fittings are permitted if capillary brazing is the joining method.

~~(2)~~ 2. The minimum copper tube allowed is type "L" except that type "M" may be used in wood frame construction. Type "M" shall not be used in steam systems.

~~(3)~~ 3. No plastic pipe permitted in any system operating in excess of 120 degrees F.

~~(4)~~ 4. Unions, valves and flare or compression connections not permitted.

7609

SBC 7610 is changed to SBC 7609 which is amended to read as follows:

SBC ~~7610~~ 7609 Underground. Where piping is run underground or embedded in concrete or masonry, no threaded joints shall be used except as in (4) below. Where solder joint fittings are used, for nonferrous piping the capillary brazing alloys shall be used. Underground piping shall not be placed on nor covered with fill containing cinders.

~~(1)~~ 1. Piping embedded underground as defined in this Code shall be embedded completely and shall not rest on an interface. Supports for positioning the piping should be non-absorbent and inorganic. Reinforcing steel, angle iron, pieces of pipe, or stone or concrete mounds may be used. No wood, brick, concrete block, or materials shall be used for support of the piping.

~~(2)~~ 2. Where piping is embedded in structural load supporting slabs, above grade, construction Codes may affect their position. In general, their position should not be less than 3/4 inch from external face.

~~(3)~~ 3. Steel and ~~wrought-iron-pipe~~ steel alloy joints to be installed in contact with the earth shall be coated with a bituminous enamel, or approved equal, to prevent deterioration of the pipe from external causes.

~~(4)~~ 4. Threaded joints may be used underground if encased in conduit to protect the pipe and/or insulated from external damage; and to provide space in which the pipe is free to expand and contract while held in proper alignment. All joints to be coated with bituminous enamel or approved equal.

~~(5)~~ 5. The minimum copper tube allowable for underground is Type L.

~~(6)~~ 6. No cast brass or bronze fittings are permitted.

~~(7)~~ 7. Connections to be made underground shall be by fusion welding or capillary brazing except as otherwise noted.

7609 Cont

~~(8)~~ 8. All piping shall be subjected to a hydrostatic test of at least one and one half times the design operating pressure, for four hours duration, but not less than 100 psig, witnessed by the administrative authority.

When there is a possibility of freezing, testing may be accomplished by using air to the above prescribed minimum pressure for 24 hours duration.

~~(9)~~ 9. Where piping enters and exits concrete it shall be surrounded with a compressible material having a minimum thickness of 1/2 inch and extending a minimum of 6 inches underground.

~~(10)~~ 10. Piping run underground containing liquids or steam at a greater than 20 degree difference from underground temperature shall be insulated and protected from moisture except for properly designed panel heating and snow melting systems.

~~(11)~~ 11. Plastic shall not be used underground, except for condensate drains from cooling equipment, or as allowed under the provisions of SBC 7606.

SBC 7609 is changed to SBC 7610 which is amended to read as follows:

SBC ~~7609~~ 7610 Joints and Connections. All joints and connections shall be gas or water tight to the strength standards of the particular type of joint or connection employed.

The types of approved connections are as follows: -1969

~~(1)~~ 1. Threaded connections shall conform to the American National Taper Pipe Thread. ASA ANSI B-2.1 or F.S. GGG-P-351a. All burrs are to be removed. Pipe shall be reamed. Pipe joint compound shall be used on male thread only.

~~(2)~~ 2. Soldered connections shall be thoroughly cleaned and fluxed with non-corrosive flux. Soft solder used for joints shall have a nominal composition of 50% tin and 50% lead for piping not to exceed 160 degrees F., a nominal composition of 95% tin and 5% antimony for piping not to exceed 250 degrees F. and conforming to ASTM Standard B-32, 1970.

~~(3)~~ 3. Capillary brazed connections shall be thoroughly cleaned and fluxed with a suitable flux. Brazing material shall conform to ASTM Standard for filler metal B-260 or ANSI B-36.35, 1966.

~~(4)~~ 4. Flared connections for soft copper tubing shall be made with fittings meeting ASA ANSI B-16.26, 1967 Standards. The tubing shall be reamed and expanded with proper flaring tools.

~~(5)~~ 5. Flareless connections for soft copper tubing shall be made with fittings meeting ASA ANSI Standards. When a bite-type fitting is used, the joint shall first be made up tight, then disassembled to make sure the depth of "bite" is adequate and then reassembled.

~~(6)~~ 6. Expansion joints shall be of an approved type, installed in accordance with the manufacturer's recommendations. Every expansion joint, other than an expansion loop, shall be accessible. Anchors and guides shall be provided as necessary to prevent undue strain or deflection on piping systems or building structures.

~~(7)~~ 7. Welded connections. The welding procedure shall be such as to assure substantially full root penetration and thorough fusion of the deposited metal with the base metal.

~~(a)~~ A. The administrative authority reserves the right to question the competency of a welder for any welded connections made in the installation of all piping systems. In case of a disagreement as to the competency of the welder, tests may be requested by the administrative authority and the costs for such testing to be borne by the contractor; or at the contractor's option, a certificate of proficiency from a recognized testing agency attesting to the skill of the welder may be required as an alternate to such tests.

~~(b)~~ B. Paragraph A. above shall not relieve the requirements for certified welding where otherwise required by Code.

~~(8)~~ 8. The bending of pipe or tube is permissible provided that no kinks or excessive flattening of the pipe or tube results. Such bending must be done under a controlled process and minimum bending radii in accordance with Table ~~1~~ 76-A.

SBC 7611 is amended to read as follows:

SBC 7611 Isolation of Major Components. All liquid and steam systems except those serving single and two family dwellings shall be provided with a means of isolating the boilers, (except in the case of single steam boilers) ~~with~~, motorized valves, pumps and other devices subject to repairs, so that such repairs can be made without draining or removing the pressure ~~of~~ from the remaining parts of the system. In some cases the isolation of certain loops or risers may fulfill this requirement, subject to the approval of the administrative authority. Union or flanged connections shall be provided for pumps and coils.

SBC 7612 is amended to read as follows:

SBC 7612 Pressure Relief and Safety Valve. Each ~~hot liquid~~ boiler, liquid system, or heat exchange shall be equipped with a pressure relief valve, and each steam boiler or steam system with a safety valve. All pressure relief and safety valves shall be rated and installed in accordance with the provisions of the ASME Boiler and Pressure Vessel Code, 1971 Edition.

~~(1)~~ 1. Discharge piping from safety and relief valves shall be led to a position such that the danger of scalding any person is minimized, and away from operating controls, thus preventing damage thereto.

~~(2)~~ 2. Inlet and discharge pipes are to be full size of valve opening and the discharge end shall be reamed and unthreaded.

~~(3)~~ 3. When manifolding two or more valve discharges, the piping shall be sized so that its area is equivalent or greater than the combined areas of the discharge openings.

~~(4)~~ 4. Discharge piping, from safety or relief valve, when rising up shall be provided with a drain opening to prevent the accumulation of condensate at the valve.

~~(5)~~ 5. The required relieving capacity of the pressure relieving device or devices on a boiler or heat exchanger shall be equal to, or greater than, the maximum output of the boiler or heat exchanger.

~~(6)~~ 6. To prevent excessive loss of relieving capacity of the discharge piping because of length of pipe, ~~such discharge piping shall be increased in size~~ the valve discharge piping shall be sized to relieve the full rating of the system regardless of the length of such piping.

7. All relief and safety valves shall be provided with a suitable test lever. Any valve failing to open within 10% of the setting marked shall be replaced.

SBC 7613 is amended to read as follows:

SBC 7613 Blow Off and Drain Piping. The end of the blow off piping from any boiler or the vent pipe from any blow off tank shall not terminate in any location where the discharge can endanger the safety of any person or property.

1. The exhaust, blowoff, or drain from a boiler or heat exchanger shall not connect directly with any sewer, waste, vent pipe, or rain water leader, but may connect indirectly.

2. All such pipes from a high pressure steam source, shall be indirectly connected by discharging into a blow off tank or condenser as required by ~~the State of~~ Minnesota Regulations Relating to the Installations of High Pressure Steam ~~Code~~ Piping and Appurtenances, 1967 Edition.

3. All such pipes from low pressure steam boilers and ~~hot water~~ liquid boilers rated at 150 horsepower or more and operated at 180 degrees fahrenheit or more shall also discharge into a blow off tank or condenser as required by ~~the State of~~ Minnesota Regulations Relating to the Installation of High Pressure Steam Piping and Appurtenances 1967 Edition ~~Code~~, such device need not be ASME rated if the discharge is less than 220 degrees fahrenheit.

4. In a similar manner, all other such pipes which would cause a discharge of steam or water to enter the sewer above ~~80°F.~~ 180°F. for a period of more than 10 minutes shall be equipped with a means of lowering the entering temperature below 180°F. This provision is not meant to be applied to boilers or heat exchangers which are drained on rare occasions. Drains from pressing machines and similar equipment may waste into an open floor drain.

5. Any closed condenser or sump shall be provided with a relief vent not less than one pipe size larger than the largest inlet, which relief vent or pipe should be taken off the top, and extend separately full size ~~through-the-roof~~ to a safe area of discharge.

6. Chemical or industrial liquid wastes which are likely to damage or increase maintenance costs on the drainage system shall be pretreated to render them innocuous prior to discharge into the drainage system. Piping conveying industrial chemical or process wastes from their point of origin to sewer connected pre-treatment facilities, shall be of such material and design as to perform adequately its intended function.

SBC 7614 is amended to read as follows:

SBC 7614 Controlling Devices. All automatically operated boilers shall be provided with a minimum of two independently operated controls consisting of an operating control and a high limit control for shutting off fuel supply.

SBC 7615 is amended to read as follows:

SBC 7615 Mixing of Radiation. ~~There should be no intermixing of different types of cast iron or fin tube radiation and coils on a common circuit zone.~~ In intermixing different types of cast iron radiation with fin tube radiation, coils, or fan units on a common zone or loop, the rates of heat emissions and operating temperatures must be considered and adjustments in sizing made to prevent erratic operation.

SBC 7616 is amended to read as follows:

SBC 7616 Low Water Cut-offs. Each automatically fired steam boiler shall be equipped with an automatic low water fuel cut-off to automatically cut off the fuel supply when the surface of the water falls to the lowest safe water level.

~~(1)~~ 1. Each automatically fired ~~hot-water~~ liquid boiler, or system of boilers, having a rated output in excess of 400,000 Btu shall be equipped with an automatic low water fuel cut-off to automatically stop the fuel supply when the surface of the water falls not lower than the lowest ~~safe~~ permissible water level established by the boiler manufacturer.

~~(2)~~ 2. All boilers installed at elevations where all radiation in the system is below the safe boiler water level ~~should~~ shall be equipped with an automatic low water fuel cut-off to automatically stop the fuel supply when the surface of the water falls not lower than the lowest safe permissible water level established by the boiler manufacturer.

SBC 7617 is amended to read as follows:

SBC 7617 Piping Support. All piping shall be securely supported by metal hangers or other approved hangers, so spaced that there will be no sag in piping between points of suspension, and where run on walls shall be securely supported by metal brackets or pipe supports similarly spaced. Supports shall be so arranged that there will be no undue strain on the threads of any pipe or fittings and equipment connected thereto. Contact between pipe and dissimilar metals shall be avoided.

The maximum spacing of hangers and minimum hanger rod size for steel and copper pipe 2" and larger shall be ~~as follows:~~ in accordance with Table 76-B.

7618-21 P.C.

SBC 7622 is amended to read as follows:

SBC 7622 Water Supply Fill Connections. Water fill connections to steam boilers shall be independent of any water column connections. Fill connections to all boilers, steam, hot water heating and chilled water or other liquid systems shall be provided at least with a check valve and a stop valve. Where a system is filled with an anti-freeze or toxic solution a permanent tag shall be placed in plain view stating "Caution, this system contains anti-freeze/toxic solution. There shall be no permanent direct connection between this system and the potable water supply of the building".

The administrative authority may require the installation of an air gap or an approved, double check-double gate valve assemblies with test cocks as protective devices against back flow in connections between a potable water system and other fluid systems which present significant health hazards. The use of automatic fill and pressure reducing valves on closed or pressure heating or cooling liquid systems is prohibited. However, permission may be obtained from the administrative authority in isolated cases where hardship can be proven.

City water connections to boiler feed water systems or cooling systems, in which water conditioning chemicals are introduced, shall be made through an air gap or provided with an approved backflow preventer located in the potable water line before the point where such chemicals are introduced. When water conditioning chemicals will not be introduced, an approved check valve shall be installed in the water supply line to the system.

SBC 7623 Numbering has been editorially changed.

SBC 7623 Boiler foundations. Each steam or ~~hot water~~ liquid boiler to be installed shall be set level, firm, permanent and in a manner which will prevent water from accumulating at the base; subject to the approval of the administrative authority.

~~(1)~~ 1. Boilers to be installed at other elevations than a basement floor shall rest upon concrete, or other fire proof floor construction having no wooden or other combustible finish in close proximity, except those rated for combust~~ion~~ floor installation.

~~(2)~~ 2. In boiler replacements where floor is not level, or poor quality, or if water may be encountered on floor around boiler base, a concrete base shall be provided in accordance with the weight of the boiler.

~~(3)~~ 3. In no case shall a boiler be set where the building is not structurally capable of supporting its operating weight.

SBC 7624 Numbering has been editorially changed.

SBC 7624 Insulation of Pipes. Where steam and ~~hot water~~ supply and return piping pass through occupied areas where their heat emission might be hazardous or where such piping is likely to freeze, it shall be properly covered with not less than 3/4 inch insulation material.

~~(1)~~ 1. No concealed hot ~~water~~, steam, or return risers, or branches shall be located in outside walls or exposed portion of any projection of a building unless properly protected with not less than 3/4 inch of approved inorganic non-combustible insulation, or unless space around pipes is properly filled with mineral wool or other approved or equal inorganic non-combustible insulating material.

~~(2)~~ 2. All distribution piping or fittings for chilled water systems shall be covered continuous throughout with a vapor or moisture proof insulation material to prevent condensation.

SBC 7625 is amended to read as follows:

SBC 7625 Hole Cutting. Because of the variables in hole cutting in building joist members, Appendix 76-I Figure 76-(1) is offered as a guide to the installer of piping systems. Further information related to the minimum standards for hole cutting should be requested of the administrative authority.

SBC 7626 is amended to read as follows:

SBC 7626 Drainage. All systems ~~should~~ shall be arranged within practical limitations so that the entire system can be evacuated, or the liquid removed by other practical means to permit alterations or repairs, or to prevent possible freeze up due to a malfunction of the system. A floor drain should be provided for all boiler and heat exchanger installations.

SBC 7627 is amended to read as follows:

SBC 7627 STEAM SYSTEMS. Scope. This section shall include and govern all work done and materials used in the installation of low pressure boilers and/or steam piping systems together with their alteration. For high pressure systems the Minnesota Regulations ~~for~~ relating to the installation of high pressure steam piping and appurtenances, 1967 edition shall govern and be the ~~maximum~~ applicable standard of this Code. See Appendix 76-II.

SBC 7628 is amended to read as follows:

SBC 7628 Classifications. Steam ~~heating~~ systems shall be classified according to any one of, or combination of, the following features:

~~(1)~~ 1. Piping arrangement.

~~(2)~~ 2. Pressure or vacuum conditions.

~~(3)~~ 3. Method of returning condensate to boiler.

SBC 7629 is amended to read as follows: (also alphabetical changes)

SBC 7629 Definitions. The following terms are defined as follows:

DOWN-FEED OR OVERHEAD SYSTEMS. Those in which supply mains are above the level of the ~~radiation~~ terminal units which they serve.

DRIP. A pipe (or a steam trap and pipe considered as a unit) which conducts condensation from the supply side to the return side of a steam ~~heating~~ system.

DRY RETURNS. Those returns through which both water and air are being passed.

EQUIVALENT LENGTH OF RUN. The actual distance in feet from source of steam supply, boiler, or pressure reducing valve, to the farthest ~~radiator~~ terminal unit in system, and then back along return line to boiler or mechanical return device, plus resistances of all fittings and valves as expressed in terms of straight pipe.

GRAVITY LOW PRESSURE STEAM ~~HEATING~~ SYSTEM. One in which the condensate is returned to the boiler by gravity due to the static head of water in the return mains. The elevation of the boiler water line must consequently be sufficiently below the lowest heating units and steam main and dry return mains to permit the return of condensate by gravity. The water line difference must be sufficient to overcome the maximum pressure drop in the system and the operating pressure of the boiler when radiator and drip traps are used as in two-pipe vapor systems. This applies only to closed circuit systems, where the condensation is returned to the boiler. If the condensation is wasted, no water line difference is required.

HARTFORD CONNECTION. A method of connecting pipe and pipe fittings in the bleeder or equalizer line between the steam and return headers of a boiler. The connection into the bleeder or equalizer line is made at a height which prevents the boiler water level from lowering dangerously below the normal level as a result of backward flow into the return mains.

Essentially, the Hartford connection is an inverted seal in which one or more returns are brought together below the water line, carried up and tied into the balance equalizing pipe from the header at a point just below the water line. The center line of the shoulder nipple is located at a point two (2) to four (4) inches below the normal water line, depending upon the size of the return main or return header.

HIGH PRESSURE STEAM. Steam at pressures in excess of 15 pounds above atmospheric pressure.

LOW PRESSURE STEAM. Steam at pressures not in excess of 15 pounds above atmospheric pressure.

MECHANICAL RETURN LOW PRESSURE STEAM ~~HEATING~~ SYSTEM. One in which the condensate flows to a receiver and is then forced into the boiler against the boiler pressure. The lowest parts of the supply side of the system must be kept sufficiently above the water line of the receiver to insure adequate drainage of water from the system, but the relative elevation of the boiler water line is unimportant in such cases except that the discharge head on the mechanical return device becomes greater as the height of the boiler water line above the pump increases. There are three general types of mechanical returns in common use:

1. Mechanical return trap.
2. Condensation return pump.
3. Vacuum return pump.

ONE-PIPE SYSTEMS. Those in which the flow of the steam supply to the ~~radiation~~ terminal units and the return of condensate flow are in opposition to each other.

SERVICE MAINS:

1. Supply service mains are those pipes through which the steam flows from the boiler or pressure reducing valve and to which the radiator supply branches are connected.
2. Return Service Mains are those pipes which carry condensate to the boiler or mechanical return device, and to which the radiator return branches are connected.

TRANSMISSION MAINS. Those pipes which, though not actually a part of the ~~heating~~ system proper, are connected to the service mains of the system and act as sources of supply to same.

TWO-PIPE SYSTEMS. Those in which one pipe is used for the supply of steam to the ~~radiation~~ terminal units and another for the return of condensate.

UP-FEED SYSTEMS. Those in which the supply mains are below the level of the ~~radiation~~ terminal units which they serve.

VACUUM RETURNS. Those returns through which both water and air are being passed and upon which a vacuum is maintained at all times through the medium of a vacuum producer.

WET RETURNS. Those returns through which water only is being passed.

SBC 7630 is amended to read as follows:

SBC 7630 Boilers

~~(1)~~ 1. See Section SBC 7603.

~~(2)~~ 2. In the determination of boiler capacity to be installed in boiler replacements the actual total connected load shall be counted and the BTU heat loss calculated. The greater of these calculations shall be used for boiler capacity to be installed.

3. NET LOAD RATING FACTORS FOR GAS FIRED BOILERS. (See Table 76-C).

NOTE: Due to firing rate and steam capacity of modern boilers in order to prevent early low water shut down because of loss of water in boiler and retension of condensate in system, gravity system boiler replacements, where large mains and risers exist, (3" and over) should be looked at individually for the possibility of having to convert the system to a mechanical return pump system or sizing the boiler capacity commensurate with piping losses and connected load.

SBC 7631 is amended to read as follows:

SBC 7631 Steam Supply from High Pressure Boilers

~~(1)~~ 1. In every case where steam supply for a low pressure ~~heating plant~~ system is taken from a high pressure boiler or boilers from which steam may or may not be furnished for other purposes, the capacity of such boiler or boilers shall be adequate to meet the demand to be placed upon them under peak load conditions.

7631 Cont

7631 Cont

~~(2)~~ 2. A proper reducing valve or valves capable of maintaining a reduced pressure not to exceed 15 pounds per square inch on the heating system shall be installed between said high pressure boiler or boilers and the ~~heating~~ system.

~~(3)~~ 3. A steam safety valve set at not to exceed 15 pounds per square inch shall be installed and vented to the atmosphere on the low pressure side, and discharged at a point that will not jeopardize persons or property.

~~(4)~~ 4. The safety valve and discharge piping shall be of sufficient capacity and shall be set to relieve the entire output in the event of failure of the pressure reducing valve or valves.

~~(5)~~ 5. A pressure gauge calibrated to 1 1/2 times the maximum low pressure shall be installed on the low pressure side immediately adjacent to the reducing station.

SBC 7632 Numbering has been editorially changed.

SBC 7632 Boiler Connections. Steam boiler outlets or inlets shall not be bushed. Steam boilers with multiple outlets shall have not less than two outlets connected to a header or service main, or connected in accordance with the boiler manufacturer's recommendation.

~~(1)~~ 1. For steam boiler installations the header shall be sized in accordance with the system pressure drop and the gross rating of the boiler or boilers.

~~(2)~~ 2. In standby boiler installations the header shall be sized in accordance with the capacity of a single boiler.

~~(3)~~ 3. All steam boilers used in connection with systems having gravity returns shall be provided with a Hartford return connection. In no case will the bottom of the return connection to the equalizer pipe be lower than the safe low water level of the boiler. A scale pocket not less than 1 inch in size shall be provided at the bottom of the return loop connection.

~~(4)~~ 4. The size of the equalizer pipe is based upon the grate area for hand fired boilers as follows: 1 1/2 inch for boilers having a grate area of less than 4 square feet, 2 1/2 inches for boilers having a grate area of from 4 to 14.9 square feet, or 4 inches for boilers having a grate area of from 15 square feet and over.

~~(5)~~ 5. The size of the equalizer pipe is based upon the boiler gross output for automatically fired boilers as follows: 1 1/2 inch for boilers with a gross output of 250 pounds per hour or less, 2 1/2 inch for boilers with a gross output of from 251 to 2000 pounds per hour, or 4 inch for boilers with a gross output of more than 2000 pounds per hour.

~~(6)~~ 6. Each steam boiler shall have a blow-off pipe connection fitted with a steam service type valve or cock not less than 3/4 inch pipe size connected with the lowest water space practicable or not less than size of tapping provided by boiler manufacturer for this purpose, or in accordance with the following capacities: 500 pounds per hour, 3/4 inch; 501 to 1250 pounds per hour, 1 inch; 1250 to 2500 pounds per hour, 1 1/4 inch; 2501 to 6000 pounds per hour, 1 1/2 inch; 6000 pounds per hour and larger, 2 inch.

~~(7)~~ 7. Each steam boiler shall have a steam gage connected to its steam chamber or water column by means of a siphon or equivalent device. The dial shall be calibrated to 1 1/2 to 2 times the safety valve setting.

SBC 7633 is amended to read as follows:

SBC 7633 Boiler Feed Pumps, Vacuum Pumps and Combinations

~~(1)~~ 1. Standards. The following sections shall govern the capacities and manner of installation of all boiler feed pumps, vacuum pumps and combinations thereof, traps, etc., installed after the adoption of this Code in connection with steam ~~heating plants~~ systems.

~~(2)~~ 2. Capacities. In all cases where the boiler feed pumps or vacuum pumps, or any combinations of such devices, or traps, etc., are used in connection with steam ~~heating plants~~ systems, the capacity of each device or combination of devices shall be subject to the approval of the administrative authority, based upon certified ratings of the manufacturers.

~~(3)~~ 3. All pumps and equipment shall be set on substantial foundations and secured in such manner as will prevent distortion of adjacent equipment or piping. Flexible couplings shall not be used to compensate for misalignment but only to compensate for temperature variations. Pipe connections shall be independently supported in such a manner as to prevent undue stresses in/on equipment, due either to weight or expansion.

~~(4)~~ 4. Where there is a likelihood that oil will be absorbed by condensate ,such condensate shall be taken through an effective oil separator before entering any part of the heating system or other apparatus.

SBC 7634 Numbering has been editorially changed.

SBC 7634 Stop Valves and Check Valves. Where a manual shut-off valve is installed on the steam supply side of any boiler, branch line or heating equipment, a corresponding return shut-off valve or check valve shall be installed on the return side of each.

~~(1)~~ 1. Multiple Boiler Installation. A shut off valve shall be used in each supply and return pipe connection of two or more boilers connected to a common system.

7635 N.C

SBC 7636 Numbering has been editorially changed.

SBC 7636 Drips. All points at which accumulation of water or condensation are liable to occur in steam supply pipes shall be properly dripped and trapped for the removal of condensate.

~~(1)~~ 1. No steam main shall be dripped into a dry return which carries condensate without trapping such a drip. Whenever it becomes necessary to install traps to discharge the condensate into a return main located above the elevation of the trap, or when the trap must discharge against a definite back pressure, a check valve shall be installed on the discharge side of the trap.

~~(2)~~ 2. The dripping of high pressure mains, or of equipment using high pressure steam into low pressure or vacuum return shall be accomplished by the use of a flash tank device or method approved by the administrative authority.

7637 N.C.

SBC 7638 is amended to read as follows:

SBC 7638 HOT WATER HEATING, CHILLED WATER COOLING AND LIQUID PIPING SYSTEMS. Scope. This section shall include and govern all work done and materials used in the installation of hot water heating boilers and systems of piping hot water, chilled water or other liquids. See Appendix 76-III of this Section.

SBC 7639 is amended to read as follows:

SBC 7639 Classifications. Liquid systems shall be classified according to operating temperature as follows:

~~(1)~~ 1. Low-Temperature Liquid Systems. A hot liquid ~~heating~~ system operating within the pressure and temperature limits of the ASME Boiler Construction Code for Low Pressure Heating Boilers. The maximum allowable temperature is 250°F.

~~(2)~~ 2. Medium-Temperature Liquid Systems. A hot liquid ~~heating~~ system operating at temperatures of 250°-350°F.

~~(3)~~ 3. High-Temperature Liquid Systems. A hot liquid ~~heating~~ system operating at temperatures over 350°F.

~~(4)~~ 4. Medium and high-temperature liquid systems are basically similar to conventional (LTW) forced hot water systems. The principal differences from low-temperature ~~water~~ systems are the higher pressure, the heavier equipment, the smaller pipe sizes, and the manner in which pressure is maintained on the liquid. (Reference: ASHRAE Guide and Data Book, "Applications", 1971 Edition, Chapter 10, 11 and 12).

SBC 7640 Alphabetical Changes.

SBC 7640 Definitions. The following terms shall mean:

CLOSED HOT WATER SYSTEM. A forced hot water system in which the circulating water is completely enclosed, under pressure above atmospheric, and closed to the atmosphere.

EXPANSION TANK, CLOSED SYSTEM. An airtight tank which provides a means of pressurizing the system over a wide range of conditions.

FORCED HOT WATER SYSTEM. Forced hot water system in which circulation is created by means of a pump, usually driven by an electric motor.

GRAVITY HOT WATER SYSTEMS. Gravity hot water heating systems where circulation of water is due to the head created by the difference in density of the water between the supply and return risers.

ONE PIPE SYSTEM. A one pipe system employs a single pipe main with special fittings installed at riser connections to the heating elements.

PURGE SYSTEM. A system whereby the initial removal of air is accomplished from piping systems by directing the flow of water with sufficient velocity.

PURGE VALVE. A valve installed between the fill water pipe connection and the purge drain connection.

PURGE DRAIN VALVE. A valve providing a hose connection at a purge point for initial removal of air.

SERIES LOOP, ONE PIPE SYSTEM. A system in which the heated water flows through each consecutive heating element and directly back to the source.

TWO PIPE REVERSED RETURNED SYSTEM. A system in which the heating medium from each heat transfer unit is returned along paths arranged so that all circuits composing the system are of equal length.

TWO PIPE DIRECT RETURN SYSTEM. A system in which the heating medium after it has passed through a heat exchanger unit, is returned to the boiler by the shortest direct path, resulting in considerable differences in the lengths of the several circuits composing the system.

SBC 7641 Numbering has been editorially changed.

SBC 7641 Boilers.

~~(1)~~ 1. See SBC 7603.

~~(2)~~ 2. Table ~~3~~ 76-D sets forth factors to be used in determining net load ratings of boilers based on input. These factors when multiplied by the BTU input to the boiler will give the net rating of the hot water boiler in BTU or square feet of equivalent direct radiation.

7642 N.C

SBC 7643 Numbering has been editorially changed.

SBC 7643 Expansion or Compression Tanks

~~(1)~~ 1. Every hot water heating system shall be provided with a compression or expansion tank of a capacity as set forth in Table ~~2~~ 76-F or formula below.

This formula should be used only for operating temperatures between 106 degrees F. and 280 degrees F.

$$V_t = \frac{(0.00041 \pm T - 0.0466)V_s}{\frac{P_a}{P_f} - \frac{P_a}{P_o}}$$

7643 CONT

7643 Cont

Where
V_t = minimum volume of the expansion tank, gallons.

V_s = system volume, gallons.

~~t~~T = maximum average operating temperature, Fahrenheit.

P_a = pressure in expansion tank when water first enters usually atmosphere pressure, feet of water, absolute.

P_f = initial fill or minimum pressure at tank, feet of water absolute.

P_o = maximum operating pressure at tank, feet of water, absolute.

A widely used formula recommended for temperatures below 160 degrees F. is:

$$V_t = \frac{E}{\frac{P_a}{P_f} - \frac{P_a}{P_o}}$$

Where
E = net expansion of the water in the system when heated from minimum temperatures to maximum temperatures, gallons.

~~(2)~~ 2. Provision shall be made for draining such tank without emptying system.

~~(3)~~ 3. The valve between the boiler or mains and the expansion tank shall have permanently attached thereto a metal tag having substantially the following wording stamped or etched thereon: "This valve must be OPEN at all times except when draining expansion tank".

~~(4)~~ 4. The tank shall be securely and adequately supported in such manner that no portion of the weight of the tank or contents will be borne by the piping connected thereto, and shall be provided with drain connection and valve. No attachment into bottoms of wood joists by nails is permitted.

~~(5)~~ 5. The minimum pipe size to connect an expansion tank to the system shall be 1/2 inch I.D. for closed systems and 3/4 inch I.D. for open systems.

SBC 7644 Numbering has been editorially changed.

SBC 7644 Residential System Design. System design features and the sizing of hot water and chilled water pipe distribution systems shall be consistent with the practices presented in the ASHRAE guide copies of which are on file with the administrative authority.

Design Limitations.

~~(1)~~ 1. Average water temperatures in living areas for hot water space heating shall not exceed 200 degrees for residential applications.

~~(2)~~ 2. Maximum water velocities in hot water or chilled water systems shall not exceed those listed in Table ~~1.~~ 76-E.

~~(3)~~ 3. Where design temperature drops in excess of 20° are to be used, calculations shall be submitted to the administrative authority.

SBC 7645 through SBC 7661 have been editorially changed to read as follows:

~~SBC-7645~~ Table No. 1(RESIDENTIAL) this Table is placed at the end of Chapter 76 and is amended to read as follows:

~~SBC-7645~~ Table ~~No.-1~~ 76-E (RESIDENTIAL)

SBC 7646 is changed to SBC 7645

~~SBC-7646~~ 7645 Pitch and Venting. All piping shall be installed so that all gases which are liberated from the water can move freely to a vented section of the system. Whenever practicable, the pipe line shall be pitched so that gases flowing to a vent will flow in the same direction as the water. A positive means of eliminating gases and air from the system shall be provided. A purge system may be used provided that individual circuits can be individually purged.

SBC 7647 is changed to SBC 7646

SBC ~~7647~~ 7646 Chilled Water Piping General. All distribution piping and fittings for chilled water systems are to be covered continuously throughout with a vapor or moisture proof insulation material.

~~(1)~~ 1. In combination heating and cooling systems using a single pump, a balance cock shall be installed in the supply pipe from the heating source.

~~(2)~~ 2. Air vents shall be provided at all fan coil units and at all high points in the system.

~~(3)~~ 3. Units which are to be used only for heating shall be provided with a shut-off valve, to be closed when cooling system is in operation.

~~(4)~~ 4. Condensate drains from terminal units shall not be connected directly to building plumbing systems.

~~(5)~~ 5. The piping cross-connection between chiller and heating source shall be provided with a means of isolation to prevent the circulation of heater water through chiller or chilled water through the heating source.

~~(6)~~ 6. Each relief valve shall be placed on the chilling source side of all valves. Each valve shall be set to relieve at a pressure not to exceed the lowest maximum working pressure rating of any system component.

SBC 7648 is changed to SBC 7647

SBC ~~7648~~ 7647 Air Cushion Tank. Due to the slight expansion in the volume of water in cooling systems, the required air cushion tank capacity in gallons for a system designed for cooling can be determined by dividing the total Btu/hr cooling load by 50,000. Method in SBC 7643 also applies.

~~(1)~~ 1. Whenever valves are installed in the piping to the air cushion tank, they shall be tagged in accordance with SBC 7643.

~~(2)~~ 2. Combination heating and cooling systems may be provided with separate air cushion tanks for the chiller and boiler.

3. Methods for selecting expansion tanks. (See Table 76-F.)

SBC 7649 is changed to SBC 7648

SBC ~~7649~~ 7648 SNOW MELTING. Scope. This part of the Code shall include and govern the work done and materials used in the installation of steam and circulating hot fluid snow melting systems, and the alteration, repairs and extensions to such installations.

SBC 7650 is changed to SBC 7648-1.

SBC ~~7650~~ 1. System Design. The thermal design and installation of snow melting systems shall be consistent with the practices presented in the ASHRAE Guide, copies of which are on file in the Department of Administration.

SBC 7651 is changed to SBC 7648-2.

SBC ~~7651~~ 2. Safety. Snow melting systems shall be installed and maintained independently.

There shall be no permanent connection between the snow melting system and drinking water supply. (See Section SBC 7622).

Where petroleum distillates are used for fluids, caution or barriers to prevent possible oil leakage from being ignited shall be provided.

SBC 7652 is changed to SBC 7648-3.

SBC ~~7652~~ 3. Corrosion. Ethylene glycol solution should be tested annually to determine any change in acidity. If test indicates the inhibitor has been exhausted, the entire system should be drained and a fresh solution installed.

SBC 7653 is changed to SBC 7648-4.

SBC ~~7653~~ 4. Tag. A permanent tag shall be attached to or near the fill connection of the system stating what type of solution is present and the degree of protection that solution will provide.

SBC 7654 is changed to SBC 7648-5.

SBC ~~7654~~ 5. Thermal Stresses. Design of these systems shall be limited to an average water temperature not to exceed 120 degrees F. for piping installed in concrete.

Piping required to pass through a concrete expansion joint shall be provided with an expansion loop of sufficient length, to protect the piping from stress under normal conditions, extending underground and covered with a waterproof vapor barrier and thermal insulation.

SBC 7655 is changed to SBC 7648-6.

SBC ~~7655~~ 6. Testing. Testing piping before pouring of concrete shall be as outlined in SBC 7649- 1 with the exception of where petroleum distillates are to be used for anti-freeze fluid the test will be by air.

SBC 7656 is changed to SBC 7648-7.

SBC ~~7656~~ 7. Draining and Venting. Pipes shall be installed, so that they may be drained and the air completely vented during filling.

SBC 7657 is changed to SBC 7648-8.

SBC ~~7657~~ 8. Steam Systems. Steam snow melting systems shall have their piping encased in a non-corrosive type conduit and installed in accordance with the provisions of this Code as related to steam systems.

SBC 7658 is changed to SBC 7648-9.

SBC ~~7658~~ 9. Joints. All joints in piping shall be fusion welded or capillary brazed using appropriate fittings.

SBC 7659 is changed to SBC 7648-10.

SBC ~~7659~~ 10. Freeze Protection. Fluids for snow melting systems shall be capable of withstanding -30 degrees F.

SBC 7660 is changed to SBC 7648-11.

SBC ~~7660~~ 11. Expansion Tank. The expansion tank shall be sized in accordance with SBC 7643 plus an additional factor depending on type of anti-freeze.

SBC 7661 is changed to SBC 7649.

SBC ~~7661~~ 7649 Thermal Shock. To prevent shock, where large load variations and volumes of water are pumped through boilers, precautions must be taken to prevent a supply return temperature difference exceeding 30 degrees F.

TABLE ~~NO.--1~~ 76-A

Minimum Bending Radii and Tangent

Nominal pipe size in inches	Std. wall and heavier Min. bending radii in inches	Minimum tangents for pulling and holding plain or beveled end in inches
1	5	6
1 1/4	6 1/4	6
1 1/2	7 1/2	6
2	10	6
2 1/2	12 1/2	8
3	15	8
4	20	10

NOTE: The radius is measured to the center line of the pipe.

Table ~~No.--2~~ 76-B

Hangers & Spans

Nominal Pipe Size Inches	Maximum Span Feet	Minimum Rod Diameter Inches
~~3~~ 2	10	3/8
2 1/2	11	1/2
3	12	1/2
3 1/2	13	1/2
4	14	5/8
5	16	5/8
6	17	3/4
8	19	7/8
10	22	7/8
12	23	7/8

Table 76-C

Steam Boilers

Input BTU	Output BTU	Output Sq. Ft. EDR
99 M	.51	.00213
173 M	.52	.00217
282 M	.53	.00221
372 M	.54	.00225
748 M	.55	.00229
1124 M	.56	.00233
1500 M	.57	.00238
OVER 1500 M	.58	.00242

Table ~~No.-3~~ 76-D

HOT WATER BOILERS

Input BTU	A Output BTU	B* New Forced Circulation Installation*
1570 M-Under	.60	.70
2470 M-Under	.61	.71
over 2470	.62	.72

*These modern allowances are to be applied to modern continuous circulation installations only.

Table ~~No.-1~~ 76-E (Residential)

Pipe Diameter (inches)	1/2 to 1 1/2	2	2 1/2	3	4	5	6
Maximum Velocity (feet per second)	4	4.5	5	6	7	8.5	10

TABLE NO.-4 76-F METHOD FOR SELECTING EXPANSION TANKS

Net Btu Rating in 1000 Btuh	Maximum Tank Size Required For Boiler (Under Standard Conditions)* Conventional: Gals. in Boiler	Conventional: Tank Req'd	Flash: Gals. in Boiler	Flash: Tank Req'd	Maximum Tank Size Required For Radiation (Under Standard Conditions)* Rad. Output in 1000 Btuh at 239 Btuh Emission	Large Tube: Gals. in Rad.	Large Tube: Tank Req'd	Thin Tube: Gals. in Rad.	Thin Tube: Tank Req'd	Convector: Gals. in Rad.	Convector: Tank Req'd
50	12	2.64	5.4	1.19	50	28.5	6.27	15.7	3.4	7	1.5
60	14.5	3.19	6.4	1.41	60	34.2	7.52	16.8	3.7	7.5	1.6
70	17	3.74	7.2	1.57	70	40	8.8	19.6	4.3	8.7	1.9
80	19.5	4.29	8.0	1.75	80	45.6	10	22.4	4.9	10	2.2
90	22	4.9	8.6	1.89	90	51.4	11.3	25.2	5.5	11.25	2.4
100	25	5.5	9.4	2.07	100	57	12.5	28	6.2	12.5	2.7
125	30	6.6	11	2.42	125	71	15.6	30	8.6S	17.7	3.8
150	36	7.9	13	2.86	150	85.5	18.8	47.S	10.5	21	4.6
175	42	9.24	14.5	3.19	175	99	21.7	55	12.1	24.7	5.4
200	48	10.6	16	3.52	200	114	25.8	63.8	14.1	28.6	6.2
250	60	13.1			250	142	31.2	79.8	17.6	35.6	7.8
300	70	15.1			300	171	37.6	95.7	21.0	42.7	9.3
350	81	18.4			350	199	43.7	111	24.4	49.7	10.9
400	95	20.9			400	228	50.1	127	27.0	57	12.5
450	107	23.5			450	256	56.1	143	31.4	64	14
500	120	26.4			500	285	62.7	157	34.5	71	15.6
600	140	30.8			600	342	75.2	191	42	85.5	18.8
700	160	35.2			700	399	87.7	223	49	98.7	21.7
800	190	41.8			800	456	100	251	55.2	114	25
900	210	46			900	513	112	287	63.1	128	28.1
1000	235	51.7			1000	570	125	319	70.1	142	31.2
2000	480	106			2000	1140	250	638	140	285	62.7
3000	720	158			3000	1710	376	957	210	427	93.9
4000	960	211			4000	2280	501	1276	280	566	123
5000	1200	264			5000	4560	1003	2553	561	1140	250
12000	2000	660			12000	6540	1504	3830	842	1710	376
16000	3700	814			16000	9120	2005	5107	1123	2280	501
					20000	11400	2508	6384	1407	2850	627

Maximum Tank Size Required For Radiation (Under Standard Conditions)* Cast Iron Base Board: Gals. in Rad.	Cast Iron Base Board: Tank Req'd.	Convector Base Board: Gals. in Rad.	Convector Base Board: Tank Req'd.	Maximum Tank Size Required For Forced Circulation Piping (Under Standard Conditions)* Heat Conveyed in 1000 Btuh	One Pipe: Gals. in Piping	One Pipe: Tank Req'd.	Two Pipe: Gals. in Piping	Two Pipe: Tank Req'd.	Maximum Tank Size Req'd. For Panel (Under St'd. Conditions)* System Btu in 1000 Btuh	Panel Gals. in Panel Piping	Tank Req'd
23.5	5.16	3.2	0.704	50	7.8	1.7	10.5	2.3	50	11	0.8
28.3	6.25	4.0	0.880	60	9.0	1.98	12.5	2.75	60	13.5	1.0
33	7.25	4.5	0.990	70	10.0	2.2	14.5	3.2	70	16	1.2
37.8	8.3	5.2	1.14	80	11.5	2.5	17	3.7	80	18.5	1.35
42.5	9.4	5.8	1.27	90	13	2.9	18	3.96	90	21	1.55
47.1	10.4	6.5	1.43	100	14	3.1	21	4.6	100	24	1.75
58.8	13	8.1	1.78	125	18	3.96	27	5.9	125	30	2.2
70.8	15.6	9.7	2.13	150	22	4.85	34	7.5	150	37	2.7
82.3	18.2	11.3	2.48	175	26	5.7	40	8.8	175	44	3.2
94.3	20.8	13	2.86	200	30	6.6	47	10.3	200	50	3.7
117.8	28	16.2	3.56	250	39	8.6	62	13.6	250	65	4.75
141.5	31	19.5	4.29	300	49	10.8	78	17.2	300	70	5.7
165	36.2	22.7	4.90	350	58	12.8	94	20.7			
188.5	41.5	26	5.72	400	70	15.4	110	24.2			
212	46.6	29.2	6.42	450	80	17.6	130	28.6			
235.8	52	32.5	7.15	500	90	19.8	150	33			
282.8	62	39	8.58	600	115	25.3	190	41.8			
330	72.5	45.5	10	700	140	30.8	225	49.5			
377	83	52	11.4	800	165	36.3	260	57.2			
424.3	93	58.5	12.8	900	195	42.9	310	68.2			
476.5	105	65	14.3	1000	225	49.5	360	79.2			
942	208	130	28.6	2000	510	119	900	198			
1414	311	195	42.5	3000	960	211	1500	330			
1885	415	260	57.2	4000	1350	297	2100	462			
3770	830	520	114	8000	3400	748	5000	1100			
3655	1250	780	171	12000	5000	1254	9000	1980			
7542	1670	1040	228	16000	8300	1826	13000	2900			
9427	2080	1300	285								

Note:
For minimum tank size under standard conditions multiply Value obtained from table by 0.73

Correction Factors For Initial Pressures Other Than 12 Psig (4 Psig Min. Pressure Highest Part of System, 30 Psig Relief Pressure) Initial Pressure	Static Height	Max. Mean Temp. at Max. Mult. Factor	Multiplying Factor Maximum	Multiplying Factor Minimum
4	0		0.465	0.3
6	4.5		0.575	0.38
8	9		0.7	0.48
10	13		0.83	0.59
12	18.5		1.0	0.73
14	23		1.10	0.9
16	27.5		1.43	1.1
18	32		1.74	1.41
20	36.5		2.18	1.82
22	41.5		2.82	2.5
24	46		3.82	3.5

Correction Factors For Attic Tanks (4 Psig Initial Pressure on Tank Press., Rise = Final Press.-Static-4 Psig) Pressure Rise	Max. Mean Temp. at Max. Mult. Factor	Multiplying Factor Maximum	Multiplying Factor Minimum
4	222	1.27	1.25
8	235	0.77	0.68
10	238	0.68	0.57
12	242	0.63	0.50
14	246	0.59	0.45
16	249	0.55	0.41
18	252	0.53	0.38
20	255	0.51	0.36
25	261	0.48	0.315
30	267	0.465	0.28
35	271	0.45	0.26

Standard conditions are: 12 psig initial pressure, 30 psig final pressure, static pressure up to 18.5 ft.

Correction Factors For Systems Using Compressor to Charge Tank (Comp. Tank 50% Full of Air After Charging with Compressor) Static Height	Initial Pressure	Relief Pressure	Max. Mean Temp. at Max. Mult. Factor	Multiplying Factor Maximum	Multiplying Factor Minimum
10	8.5	30	250	0.53	0.35
18.5	12	30	252	0.65	0.48
25	15	30	248	0.85	0.67
30	17	30	244	0.97	0.79
40	21.5	45	255	0.71	0.47
50	26	45	251	0.815	0.59
60	30	45	248	1.04	0.82
75	37	75	254	0.58	0.78
100	47	75	251	0.97	0.62
150	65	100			

Correction Factors For Safety Loop Systems Initial Pressure	Max. Mean Temp. at Max. Mult. Factor	Multiplying Factor Maximum	Multiplying Factor Minimum
4	262	0.72	
6	262	0.98	0.56
8	262	1.24	0.74
10	262	2.10	1.0
12	262	3.5	1.5

Correction Factors For Tanks that are Already Undersize If Tank Reaches Final Press. At Temp.	Req'd. Tank Size Factor For Final Press. at
170 2.1 x	original tank vol.
180 1.87 x	" "
190 1.63 x	" "
200 1.34 x	" "
210 1.21 x	" "
220 1.13 x	" "

Chapter 76 of the SBC Annex is amended to read as follows:

*NOTE: Annex 76-I and II,shall be considered as binding and enforceable. Appendixes 76-I, II and III are provided as guides. The materials listed in Annex 76-I and II are permitted (within their limitations) subject to restrictions found elsewhere in this Code.

ANNEX 76-I*

APPROVED MATERIALS

Ferrous

1. Cast Iron Threaded Fittings (125 to 250 pound) ANSI (B16.4)
2. Steel Pipe, Welded and Seamless, Schedule 40 and Heavier - ANSI (B36.1 and B36.20)
3. Wrought Iron Pipe, Schedule 40 and Heavier - ANSI (B36.2)
4. Stainless Steel Pipe - ANSI (B36.19)
5. Malleable Fittings 150 PSI and Heavier - ANSI (B16.3)
6. Wrought Steel Buttwelding Fittings - ANSI (B16.9)
7. Buttwelding Ends for Pipe, Valves, Flanges and Fittings - ANSI (B16.25)
8. Wrought Steel Buttwelding Short Radius Elbows and Returns - ANSI (B16.28)

Copper Base

1. Red Brass Pipe - ANSI (H27.1) - ASTM (B42 and B43)
2. Seamless Brass Tube - ANSI (H36.1)
3. Brass or Bronze Threaded Fittings, 125 PSI and Heavier, ANSI (B16.15) - ASTM 62.
4. Brass or Bronze Flare Fittings 125 PSI and Heavier, Heavy Duty Long Collar Type - ASTM (B62)
5. Seamless Copper Tube, Types K and L - ANSI (H23.1) - ASTM- (B88) Soft Temper
6. Seamless Copper Tube, Tubes K, L and M - ANSI (H23.1) - ASTM (B88) Hard Temper
7. Cast Bronze and Wrought Solder Joint Fittings - ANSI (B16.22, H23.1, B16.18)

Plastic Pipe and Fittings

(Particular care should be taken with regard to temperatures, pressures, and other conditions of use.)
1. ABS Type 1 - ANSI (B72.3) - ASTM D2282
2. Polyethelylene - ANSI (B72.1) - ASTM D2239
3. Polyvinyl Chloride (PVC) - ANSI (B72.2) - ASTM D2241
4. Polybutylene - ANSI (B72.19) - ASTM D~~2581~~ 2662

Chapter 76 of the SBC is amended by adding a new section (Annex 76-II) to read as follows:

ANNEX 76-II*

Methods of providing an air gap and drainage requirements.

1. Indirect Waste Connections. No cold storage room, refrigerator, cooling counter, compartment, receptacle, appurtenance or device, which is used, designed or intended to be used for the storage or holding of food or drink, shall have any drain pipe directly connected to any soil, waste, or vent pipe. Such equipment shall be discharged to the drainage system through an airbreak.

2. Indirect Waste Piping. Indirect waste pipes from appliances, devices or other equipment which are equipped with drainage outlets, shall be trapped but such traps need not be vented and the waste pipe need be no larger in size than the outlet or tail piece of the fixture, appliance or equipment served, but in no case shall it be less than 1-1/4 inch in size. However, overflow pans and drip outlets need not be trapped and may be the same size as the outlet.

3. Connections from Water Distribution System. Indirect waste connections shall be provided for drains, overflows, or relief vents from the water distribution system by means of an air gap.

4. Sterilizers. Stills, sterilizers, and similar equipment or appliances requiring water and waste shall be indirectly connected, or provided with an air gap between the trap and the appliance.

5. Clear Water Wastes. Expansion tanks, cooling jackets, or any similar devices which are directly connected to the potable water system and which conduct clear water only, shall be discharged to the drainage system through an air gap.

6. Installation of Indirect Waste Piping. Indirect waste piping shall be installed so as to permit ready access for flushing and cleaning, and shall meet the material and piping sizing requirements of the Plumbing Code.

7. Refrigerating Unit Condensers and Cooling Jackets. Except where potable water provided for a refrigerator condenser or cooling jacket is entirely outside the piping or tank containing a toxic refrigerant, and having two separate thicknesses of metal separating the refriger-and from the potable water supply, inlet connections shall be provided with an approved check valve. If the refrigeration units contain more than 20 pounds of refrigerant, an approved pressure relief valve set to relieve at 5 pounds per square inch above maximum water at the point of installation shall be provided adjacent to and at the outlet side of the check valve.

8. Used Water Return Prohibited. Water used for cooling of equipment or other processes shall not be returned to the potable water system. Such water shall be discharged into the drainage system through an air gapped indirect waste, or other approved method of disposal.

9. Protection Against Backflow and Backsiphonage. Water Outlets. A potable water system shall be protected against backflow and back-siphonage by providing and maintaining at each outlet either:

   A. Air Gap. An air gap as specified herein between the potable water outlet and the flood level rim of the fixture it supplies or between the outlet and any other source of contamination.

   B. Backflow Preventer. A backflow preventer device or vacuum breaker to prevent the drawing of contamination into the potable water system.

10. Minimum Required Air Gap. The minimum required air gap shall be measured vertically from the lowest end of a water outlet to the flood level rim or line of the fixture or receptacle into which it discharges.

SIZE. The minimum required air gap shall be twice the effective opening of a water outlet unless the outlet is a distance less than three times the effective opening away from a wall or similar vertical surface in which cases the minimum required air gap shall be three times the effective opening of the outlet. In no case shall the minimum required air gap be less than shown in Table 130(e)9 of the Minnesota Plumbing Code.

Chapter 76 of the SBC is amended by adding a new section of illustrations to read as follows:

ANNEX II FIGURE 76-1

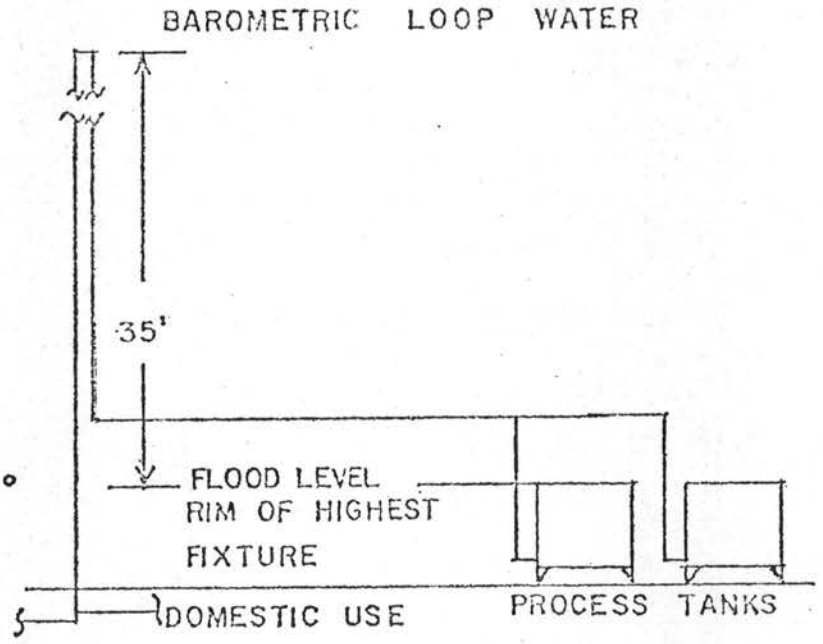

ANNEX II FIGURE 76-2

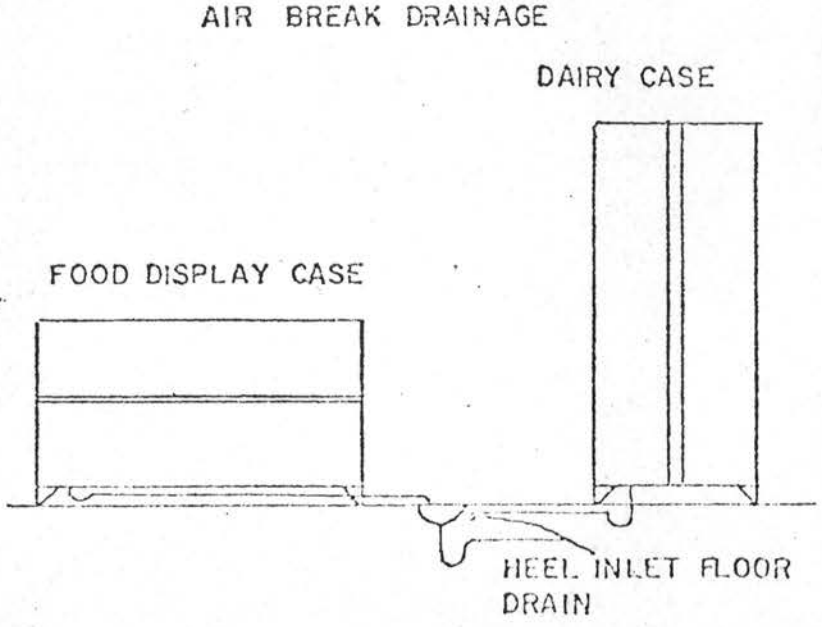

ANNEX II FIGURE 76-3

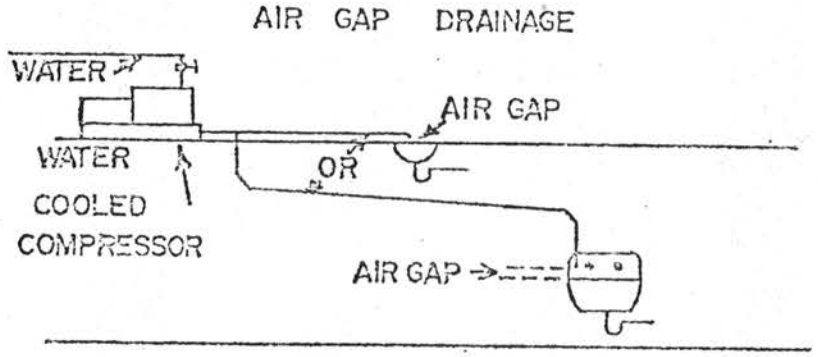

ANNEX II FIGURE 76-4

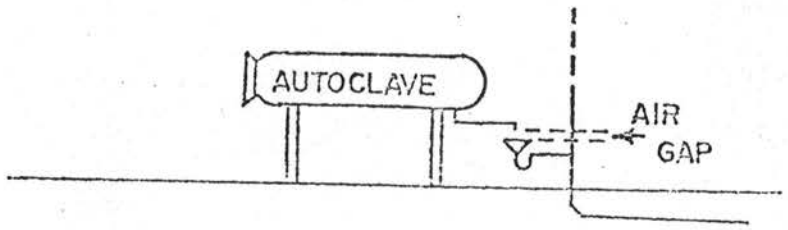

ANNEX II FIGURE 76-5

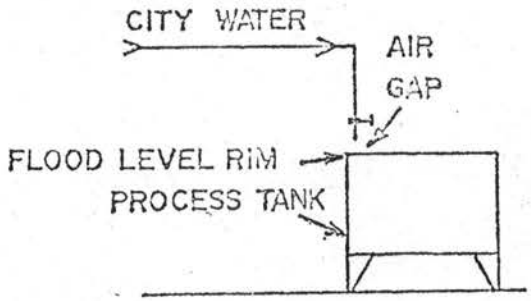

Chapter 76 of the SBC Appendix 76-I is amended to read as follows:

APPENDIX 76-I

RELATING TO CHAPTER 76 OF THE CODE

Radiation in square feet for any unenclosed radiator shall be defined as the minimum guaranteed heat emission of that radiator in BTU per hour divided by 240 for Direct Steam and 150 for Direct Hot Water Radiation.

~~(1)~~ Table for other temperatures. For various other water (or steam) temperatures, various emissions per square foot are shown in the following table:

APPENDIX I TABLE ~~No. 1~~ 76-A

Average Temperature of Water in Radiator	Heat Emission Per Square Foot
150	110 BTU per hour
160	130 BTU per hour
170	150 BTU per hour
180	170 BTU per hour
190	190 BTU per hour
200	210 BTU per hour
215	240 BTU per hour
225	260 BTU per hour
240	295 BTU per hour

NOTE 1. The above emissions are for a radiator in air at 70 degrees F.

NOTE 2: Enclosed radiators, convectors or concealed heater emission ratings shall be determined as set forth in the American Society of Heating and Ventilating Engineers Guide.

APPENDIX I TABLE 76-B

LENGTH IN FEET OF PIPE TO BE ADDED TO THE ACTUAL LENGTH OF RUN OWING TO FITTINGS--TO OBTAIN EQUIVALENT LENGTH

Size of Pipe Inches	Length in Feet to be Added to Run				
	Standard Elbow	Side Outlet Tee	Gate Valve	Globe Valve	Angle Valve
½	1.3	3	0.3	14	7
¾	1.8	4	0.4	18	10
1	2.2	5	0.5	23	12
1¼	3.0	6	0.6	29	15
1½	3.5	7	0.8	34	18
2	4.3	8	1.0	46	22
2½	5.0	11	1.1	54	27
3	6.5	13	1.4	66	34
3½	8	15	1.6	80	40
4	9	18	1.9	92	45
5	11	22	2.2	112	56
6	13	27	2.8	136	67
8	17	35	3.7	180	92
10	21	45	4.6	230	112
12	27	53	5.5	270	132
14	30	63	6.4	310	152

APPENDIX I TABLE 76-C

THERMAL EXPANSION OF PIPE IN INCHES PER 100 FEET (a)

Saturated Steam		Elongation in Inches per 100 ft. from —20F up			
Pressure Psig	Temp. Degrees F.	Cast Iron Pipe	Steel Pipe	Wrought Iron Pipe	Copper Pipe
—	—20	0	0	0	0
0.0	212	1.575	1.785	1.806	2.603
2.5	220	1.634	1.852	1.936	2.720
10.3	240	1.780	2.020	2.110	2.959
20.7	259	1.931	2.188	2.279	3.189
31.5	279	2.083	2.359	2.465	3.422
52.3	300	2.253	2.510	2.630	3.665

(a) To obtain the amount of expansion between any two temperatures, take the difference between the figures in the table for those temperatures.

APPENDIX I FIGURE 76-(1)

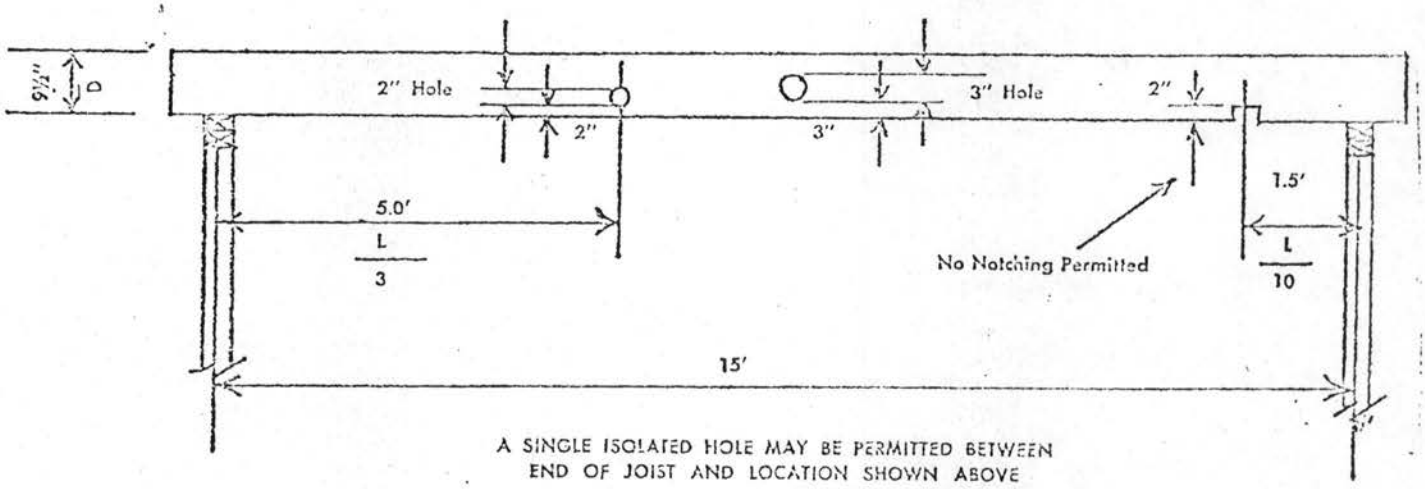

A SINGLE ISOLATED HOLE MAY BE PERMITTED BETWEEN END OF JOIST AND LOCATION SHOWN ABOVE

Maximum size of hole in center section of joist: $\frac{\text{Width of joist}}{3}$ And on center axis of joist. One hole only of the above size permitted in center section.

Maximum size of hole in end sections of joists:
Maximum size hole=2"
Minimum distance from bottom of joist=2"
Minimum space between holes in end section area=6"

Chapter 76 of the SBC Appendix II has editorial changes to read as follows:

APPENDIX 76-II

(Relating to Section SBC 7627 of this Code)

1. Steam Systems (Low Pressure)

A. Design Pressure Drops

~~(1)~~ 1. The total pressure drop shall not exceed one-half of the initial pressure when condensate is flowing in the same direction of the steam.

~~(2)~~ 2. Where condensate must flow counter to the steam, the governing factor is the velocity permissible without interfering with the condensate flow. Appendix II: Table 2 76-B gives the allowable velocities for given capacities for horizontal pipe at various grades.

2. Maximum Velocity

~~(1)~~ A. Where the quantity of the condensate is limited, and is flowing the same direction as the steam , the velocity shall be in accordance with the pressure drop as shown in Appendix II Table ~~1, preceeding~~ 76-A.

~~(2)~~ B. When the condensate must flow against the steam , even in limited quantity, the velocity of the steam shall not exceed the velocities for given capacities as shown in Appendix II Table 2, ~~preceeding~~ 76-B.

3. Equivalent Length of Run

~~(1)~~ A. The size of pipe required for the flow of steam must allow for the friction offered by the pipe, as well as for the additional resistance of the fittings and valves.

~~(2)~~ B. The length of run can be assumed to be double the actual length of pipe. This assumption shall be checked after the pipes are sized.

~~(3)~~ C. The resistances of the fittings and valves are stated in terms of straight pipe. Appendix I Table ~~3~~ 76-B gives the number of feet of straight pipe that shall be allowed for the fittings and valves. ~~See Appendix I.~~

Tables for Pipe Sizing Low Pressure Steam Systems. The values in Appendix II Tables 4- C, ~~5~~ E and ~~6~~ F shall be used in selecting pipe sizes for the various pressure drops for low pressure steam systems.

4. Sizing Piping for One-Pipe Gravity Air Vent Systems. One-pipe gravity air vent systems, in which the equivalent length of run does not exceed 200 feet, shall be sized up by means of Appendix II Tables 76 4- C, ~~5~~, D and ~~6~~ E.

~~(1)~~ A. For the steam main and dripped run-outs to risers where the steam and condensate flow in the same direction, use 1/16 psi. drop Column D.

~~(2)~~ B. Where the riser run-outs are not dripped and the steam and condensate flow in opposite directions and also for the radiator run-outs where the condition occurs, use Column L.

~~(3)~~ C. For up-feed steam risers carrying condensate back from the radiators, use Column J.

~~(4)~~ D. For down-feed systems, the main risers of which do not carry any radiator condensate, use Column H.

~~(5)~~ E. For the radiator valve size and stub connection, use Column K.

~~(6)~~ F. For the dry-return main, use Column U.

~~(7)~~ G. For the wet-return main, use Column T.

~~(8)~~ H. For systems exceeding an equivalent length of 200 ft., the total drop shall not exceed 1/4 psi. The return piping sizes shall correspond with the drop used on the steam side of the system. Thus, where 1/24 psi. drop is being used, the steam main and dripped run-outs shall be sized from Column C; radiator run-outs and undripped riser runouts from Column L; up-feed risers from Column J; the main riser on a down-feed system from Column C (it will be noted that if Column H is used, the drop would exceed the limit of 1/24 psi.); the dry-return from Column R; and the wet-return from Column Q.

~~(9)~~ J. With a 1/32 psi. drop, the sizing would be the same as 1/24 psi., except that the steam main and dripped run-outs would be sized from Column B; the main riser on a down-feed system from Column C, and the wet-return from Column N.

~~(10)~~ K. Pitch of mains shall not be less than 1/4 inch in 10 feet.

~~(11)~~ L. Pitch of horizontal run-outs to risers and radiators shall not be less than 1/2 inch per foot. Where this pitch cannot be obtained, run-outs over 8 feet in length shall be one size larger than called for in the table.

~~(12)~~ M. No supply main less than 2 inches in diameter shall be used. The diameter of the far end of the supply main shall not be less than half its diameter at its largest part.

~~(13)~~ N. Supply mains, run-outs to risers, or risers, should be dripped where necessary.

~~(14)~~ O. Where supply mains are decreased in size, they shall be dripped or provided with eccentric couplings flush on bottom.

5. Sizing Piping for One-Pipe Vapor Systems.

~~(1)~~ A. Piping for one-pipe vapor systems is sized so as to permit only a few ounces pressure drop in the system.

~~(2)~~ B. The method follows that outlined in sizing for one-pipe gravity air vent systems.

6. Sizing Piping for Two-Pipe Gravity Air Vent Systems. Piping for two-pipe low pressure systems is sized in the same manner as for two-pipe vapor systems, except that the pressure drop throughout the system can be based on 1/2 psi to 1 psi drop.

7. Sizing Piping for Two-Pipe Vapor Systems

~~(1)~~ A. Small vapor systems when the equivalent length of run does not exceed 200 feet, shall be sized by means of Appendix II Table 76 ~~4~~- C, ~~5~~ D, ~~6~~ E.

~~(a)~~ 1. Main and any run-outs to risers that may be dripped shall be sized for about 1/16 psi drop per 100 feet, use Column D.

~~(b)~~ 2. For riser run-outs not dripped and radiator run-outs use Column I.

~~(c)~~ 3. For up-feed steam risers, use Column H.

~~(d)~~ 4. For returns, use Column U, the upper portion for mains and the lower portion for risers.

~~(2)~~ B. A down-feed system shall be sized as follows:

~~(a)~~ 1. For the main vertical riser, use Column H.

~~(b)~~ 2. For down-feed risers, use Column D, using 1/16 psi drop.

~~(3)~~ C. For vapor systems over 200 feet of equivalent length, the drop shall not exceed 1/8 to 1/4 psi.

~~(4)~~ D. For vapor systems with a 400 foot equivalent run, the drop shall not be over 1/32 psi per 100 feet and shall be sized by means of Appendix II Table 76 4- C, ~~5~~ D and ~~6~~ E.

~~(a)~~ 1. For steam mains, use Column B.

~~(b)~~ 2. For radiator and undripped riser run-outs, use Column I.

~~(c)~~ 3. For the risers, use Column B.

~~(d)~~ 4. On a down-feed system, Column B shall be used for both the main riser and the smaller riser feeding the radiators in order not to increase the drop over 1/32 psi.

~~(e)~~ 5. The return risers from the lower portion of Column O and the dry return main from the upper portion of the same column, any wet returns from Column N. The same pressure drop is applied on both the supply and return sides of the system.

~~(5)~~ E. Pitch of mains shall not be less than 1/4 inch in 10 feet.

~~(6)~~ F. Pitch of horizontal run-outs to risers and radiators shall not be less than 1/2 inch per foot. Where this pitch cannot be obtained, run-outs over 8 feet in length shall be one size larger than called for in the table.

~~(7)~~ G. No supply main less than 2 inches in diameter shall be used.

~~(8)~~ H. Supply mains, supply risers, or run-outs to supply risers shall be dripped separately into a wet-return or may be connected into the dry-return through a thermostatic drip trap.

8. Sizing Piping for Two-Pipe Vacuum Systems

~~(1)~~ A. Vacuum, atmospheric, sub-atmospheric, and orifice systems are usually employed in large installations and have total drops varying from 1/4 to 1/2 psi.

~~(2)~~ B. Systems in which the maximum equivalent length does not exceed 200 feet, usually are designed for the 1/4 psi pressure drop.

~~(3)~~ C. Systems in which the maximum equivalent length exceeds 200 feet, usually are designed for higher drop (1/2 psi), owing to the relatively greater swing in pipe sizes.

~~(4)~~ D. For example, a system with 1200 feet longest equivalent length of run would be designed for a pressure drop per 100 feet of 1/2 psi divided by 12, or 1/24 psi. The piping would then be sized by means of Tables 76 ~~4~~, C ~~5~~, D and ~~6~~ E.

~~(a)~~ 1. For the steam main, use Column C.

~~(b)~~ 2. For the risers, use Column C (Column H could be used as far as critical velocity is concerned, but the drop would exceed the limit of 1/24 psi).

~~(c)~~ 3. Riser run-outs, if dripped, use Column C.

~~(d)~~ 4. Riser run-outs, undripped, use Column I.

~~(e)~~ 5. Pipe sizes for other parts would be obtained as follows:

~~1.~~ (a) Radiator run-outs, Column I.

~~2.~~ (b) Return risers from lower part of Column B.

~~3.~~ (c) Return run-outs to radiators--one-pipe size larger than the radiator trap connection

~~(5)~~ E. Pitch of mains shall not be less than 1/4 inch in 10 feet.

~~(6)~~ F. Pitch of horizontal run-outs to risers and radiators shall not be less than 1/2 inch per foot. Where this pitch cannot be obtained, run-outs over 8 feet in length should be one size larger than called for in the table.

~~(7)~~ G. When necessary, the supply mains, supply riser or run-out to a supply riser shall be dripped separately through a trap into the vacuum return. A connection shall not be made between the steam and return sides of a vacuum system without interposing a trap to prevent the steam from entering the return line.

~~(8)~~ H. Lifts should be avoided, if possible; but when they cannot be eliminated, they shall be made in the manner described in the ASHRAE Guide and Data Book - Applications - Chapter 92.

~~(9)~~ J. No lifts can be used in orifice and atmospheric systems.

APPENDIX II TABLE ~~NO.-1~~ 76-A

~~Table No.-1~~ PRESSURE DROPS IN COMMON USE FOR SIZING STEAM PIPE (a)

(FOR CORRESPONDING INITIAL STEAM PRESSURE)

Initial Steam Pressure, Psig	Pressure Drop Per 100 Ft., Psi.	Total Pressure Drop in Steam Supply Piping, Psi.
Sub-atmospheric or vacuum return	2-4 oz.	1-2 psi.
0	½ oz.	1 oz.
1	2 oz.	1-4 oz.
2	2 oz.	8 oz.
5	4 oz.	1½ psi.
10	8 oz.	3 psi.
15	1 psi.	4 psi.
30	2 psi.	5-10 psi.
50	2-5 psi.	10-15 psi.
100	2-5 psi.	15-25 psi.
150	2-10 psi.	25-30 psi.

(a) From A.S. of M, R and A.C. Engineers Research Laboratory.

APPENDIX II TABLE ~~NO.-2~~ 76-B

~~Table No.-2~~ COMPARATIVE CAPACITY OF STEAM LINES AT VARIOUS PITCHES FOR STEAM AND CONDENSATE FLOWING IN OPPOSITE DIRECTIONS. (a)

(Pitch of Pipe in Inches per 100 Ft. Velocity in Ft. per Sec.)

Pitch of Pipe	¼ in.		½ in.		1 in.		1½ in.		2 in.		3 in.		4 in.		5 in.	
	Capacity Expressed in Pounds per Hour															
Pipe Size Inches	Capacity	Max. Vel.	Capacity	Max. Vel.	Capacity	Max. Vel.	Capacity	Max. Vel.	Capacity	Max. Vel.	Capacity	Max. Vel.	Capacity	Max. Vel.	Capacity	Max. Vel.
¾	6.3	12	7.6	14	9.3	18	10.1	19	10.6	20	11.5	21	11.9	22	12.3	23
1	11.5	12	13.2	15	15.8	17	17.5	20	18.8	22	20.8	23	22.0	25	22.6	26
1¼	26.2	15	29.3	20	33.3	23	36.1	25	38.5	27	41.3	28	43.2	29	44.6	31
1½	35.7	18	39.8	21	45.3	23	49.1	25	52.3	27	56.0	28	58.7	30	60.7	31
2	59.0	19	65.9	20	74.9	23	81.4	25	86.6	27	92.4	28	97.1	29	100.3	30

(a) From A.S. of M, R and A.C. Engineers Research Laboratory.

Table No.-4 STEAM PIPE CAPACITIES FOR LOW PRESSURE SYSTEMS
(Reference to this table will be by column letter A through L)

This table is based on pipe size data developed through the research investigations of the American Society of Heating and Ventilating Engineers.

	CAPACITIES OF STEAM MAINS AND RISERS								SPECIAL CAPACITIES FOR ONE-PIPE SYSTEMS ONLY		
	Direction of Condensate Flow in Pipe Line										
	With the Steam in One-Pipe and Two-Pipe Systems						Against the Steam Two-Pipe Only				
Pipe Size In.	1/32 psi or ½ oz. Drop	1/24 psi or ⅔ oz. Drop	1/16 psi or 1 oz. Drop	⅛ psi or 2 oz. Drop	¼ psi or 4 oz. Drop	½ psi or 8 oz. Drop	Vertical	Horizontal	Supply Risers Upfeed	Radiator Valves and Vertical Connections	Radiator and Riser Run-outs
A	B	C	D	E	F	G	H[a]	I[c]	J[b]	K	L[c]
CAPACITY EXPRESSED IN SQUARE FEET E D R											
¾	—	—	30	—	—	—	30	—	25	—	—
1	39	46	56	79	111	157	56	34	45	28	28
1¼	87	100	122	173	245	346	122	75	78	62	62
1½	134	155	190	269	380	538	190	108	152	93	93
2	273	315	386	548	771	1,091	386	195	283	169	169
2½	449	518	635	898	1,270	1,800	635	395	464	—	250
3	822	948	1,160	1,650	2,330	3,290	1,130	700	800	—	475
3½	1,230	1,420	1,740	2,460	3,470	4,910	1,550	1,150	1,140	—	745
4	1,740	2,010	2,460	3,480	4,910	6,950	2,040	1,700	1,520	—	1,110
5	3,210	3,710	4,550	6,430	9,090	12,900	4,200	3,150	—	—	2,180
6	5,280	6,100	7,460	10,550	14,900	21,100	7,200	5,600	—	—	—
8	11,000	12,700	15,500	21,970	31,070	43,900	15,000	12,000	—	—	—
10	20,000	23,100	28,300	40,100	56,700	80,200	28,000	23,000	—	—	—
12	32,000	32,100	45,500	64,300	91,000	129,000	46,000	38,000	—	—	—
16	61,000	69,700	84,800	121,000	170,000	242,000	88,000	76,000	—	—	—

APPENDIX II TABLE NO.-4 76-C continued

CAPACITY EXPRESSED IN POUNDS PER HOUR

	CAPACITIES OF STEAM MAINS AND RISERS								SPECIAL CAPACITIES FOR ONE-PIPE SYSTEMS ONLY		
	Direction of Condensate Flow in Pipe Line										
	With the Steam in One-Pipe and Two-Pipe Systems						Against the Steam Two-Pipe Only				
Pipe Size In.	1/32 psi or ½ oz. Drop	1/24 psi or ⅔ oz. Drop	1/16 psi or 1 oz. Drop	⅛ psi or 2 oz. Drop	¼ psi or 4 oz. Drop	½ psi or 8 oz. Drop	Vertical	Horizontal	Supply Risers Upfeed	Radiator Valves and Vertical Connections	Radiator and Riser Run-outs
A	B	C	D	E	F	G	H[a]	I[c]	J[b]	K	L[c]
CAPACITY EXPRESSED IN SQUARE FEET E D R											
¾	—	—	8	—	—	—	8	—	6	—	7
1	10	12	14	20	28	40	14	9	11	7	7
1¼	22	25	31	43	61	87	31	19	20	16	16
1½	34	39	48	67	95	135	48	27	39	23	23
2	68	79	97	137	193	273	97	49	72	42	42
2½	112	130	159	225	318	449	159	99	116	—	65
3	206	237	291	411	581	822	282	175	200	—	119
3½	307	355	434	614	869	1,230	387	288	286	—	186
4	435	503	614	869	1,230	1,740	511	425	350	—	278
5	806	928	1,140	1,610	2,270	3,210	1,050	788	—	—	545
6	1,320	1,520	1,870	2,640	3,730	5,250	1,800	1,400	—	—	—
8	2,750	3,170	3,880	5,490	7,770	11,000	3,750	3,000	—	—	—
10	5,016	5,750	7,000	10,000	14,200	20,000	7,050	5,500	—	—	—
12	8,040	9,200	11,400	16,100	22,700	32,200	11,500	9,500	—	—	—
16	15,100	17,400	21,200	30,300	42,400	60,500	22,000	19,000	—	—	—
	All Horizontal Mains and Down-Feed Risers						Upfeed Risers	Mains & Undripped Run-outs	Upfeed Risers	Radiator Connections	Run-outs not Dripped

Notes: (a) Use at an average pressure of 1 psig is used as a basis for calculating capacities. All drops shown are in psi per 100 ft. of equivalent run—based on pipe properly pitched.
(b) Do not use Column E for drops of 1/24 or 1/32 psi; substitute Column G or Column B as required.
(c) Do not use Column J for drop 1/32 psi except on sizes 3 in. and over; below 3 in. substitute Column B.
(d) Pitch of horizontal runouts to risers and radiators should be not less than ½ in. per ft.
(e) Where greater capacities are obtained, runouts over 8 ft. in length should be one pipe size larger than called for in Table 5.

APPENDIX II TABLE NO.-5 76-D

Table-No.-5 RETURN PIPE CAPACITIES FOR LOW PRESSURE SYSTEMS

Capacity Expressed in Square Feet of Equivalent Direct Radiation
(Reference to this table will be by column letter M through EE)

This table is based on pipe size data developed through the research investigation of the American Society of Heating and Ventilating Engineers.

CAPACITY OF RETURN MAINS AND RISERS

MAINS

Pipe Size Inches	1/8 Psi or 1/4 oz. Drop per 100 ft.			1/24 Psi or 1/2 oz. Drop per 100 ft.			1/16 Psi or 1 oz. Drop per 100 ft.			1/8 Psi or 2 oz. Drop per 100 ft.			1/4 Psi or 4 oz. Drop per 100 ft.			1/2 Psi or 8 oz. Drop per 100 ft.		
	Wet	Dry	Vac.	Wet	Dry	Vac.	Wet	Dry	Vac.	Wet	Dry	Vac.	Wet	Dry	Vac.	Wet	Dry	Vac.
M	N	O	P	Q	R	S	T	U	V	W	X	Y	Z	AA	BB	CC	DD	EE
3/4	—	—	—	—	—	—	—	—	400	—	—	568	—	—	800	—	—	1130
1	500	248	—	580	285	570	700	320	700	1000	412	994	1400	460	1400	—	—	1980
1 1/4	850	520	—	970	385	976	1260	670	1300	1700	868	1700	2400	952	2400	—	—	3390
1 1/2	1050	822	—	1570	943	1550	1500	1660	1930	2700	1360	2700	3800	1510	3800	—	—	5370
2	2800	1880	—	3240	2140	3260	4630	2300	4900	5600	2960	5680	8000	3300	8000	—	—	11300
2 1/2	4700	3010	—	5300	3470	5450	6700	3800	6700	9400	4900	9510	13400	5450	13400	—	—	18900
3	7500	5448	—	8500	6250	8710	10700	7000	10700	15000	9030	15200	21400	10000	21400	—	—	30200
3 1/2	11000	7860	—	13200	8300	13000	16000	10000	16000	22000	13500	22700	32000	14000	32000	—	—	45200
4	15000	11700	—	18300	13400	18500	22000	15000	22000	31000	19500	31800	44000	21500	44000	—	—	62200
5	—	—	—	—	—	31500	—	—	38700	—	—	54000	—	—	77400	—	—	109000
6	—	—	—	—	—	50450	—	—	62000	—	—	88000	—	—	124000	—	—	175000

RISERS

3/4	—	100	—	—	190	570	—	100	700	—	190	994	—	190	1400	—	—	1980
1	—	450	—	—	450	976	—	450	1200	—	450	1700	—	450	2400	—	—	3390
1 1/4	—	990	—	—	990	1550	—	990	1900	—	990	2700	—	990	3800	—	—	5370
1 1/2	—	1500	—	—	1500	3260	—	1500	4700	—	1500	5650	—	1500	8000	—	—	11300
2	—	3000	—	—	3000	5450	—	3000	6700	—	3090	9510	—	5000	13400	—	—	18900
2 1/2	—	—	—	—	—	8710	—	—	10700	—	—	15200	—	—	21400	—	—	30200
3	—	—	—	—	—	13000	—	—	16000	—	—	22700	—	—	32000	—	—	45200
3 1/2	—	—	—	—	—	17900	—	—	22000	—	—	31200	—	—	44000	—	—	62200
4	—	—	—	—	—	31500	—	—	38700	—	—	54000	—	—	77400	—	—	109000
5	—	—	—	—	—	50500	—	—	62000	—	—	88000	—	—	124000	—	—	175000

APPENDIX II TABLE NO.-6 76-E

Table-No.-6 RETURN PIPE CAPACITIES FOR LOW PRESSURE SYSTEMS
CAPACITY EXPRESSED IN POUNDS PER HOUR
(Reference to this table will be made by column letter M through EE)

This table is based on pipe size data developed through the research investigagion of the American Society of Heating and Ventilating Engineers.

CAPACITY OF RETURN MAINS AND RISERS

MAINS

Pipe Size Inches	1/8 Psi or 1/4 oz. Drop per 100 ft.			1/24 Psi or 1/2 oz. Drop per 100 ft.			1/16 Psi or 1 oz. Drop per 100 ft.			1/8 Psi or 2 oz. Drop per 100 ft.			1/4 Psi or 4 oz. Drop per 100 ft.			1/2 Psi or 8 oz. Drop per 100 ft.		
	Wet	Dry	Vac.	Wet	Dry	Vac.	Wet	Dry	Vac.	Wet	Dry	Vac.	Wet	Dry	Vac.	Wet	Dry	Vac.
M	N	O	P	Q	R	S	T	U	V	W	X	Y	Z	AA	BB	CC	DD	EE
3/4	—	—	—	—	—	42	—	—	100	—	—	142	—	—	200	—	—	283
1	125	62	—	145	71	143	175	80	175	250	103	249	350	115	350	—	—	494
1 1/4	213	130	—	243	149	244	300	168	300	425	217	426	600	241	600	—	—	848
1 1/2	393	206	—	393	236	388	475	265	475	675	340	674	950	378	950	—	—	1340
2	700	470	—	810	535	815	1000	573	1000	1400	740	1420	2000	895	2000	—	—	2830
2 1/2	1180	760	—	1580	868	1360	1680	950	1680	2350	1230	2380	3350	1280	3350	—	—	4730
3	1880	1460	—	2130	1560	2180	2680	1750	2630	3750	2250	3800	5350	2500	5350	—	—	7560
3 1/2	2750	1970	—	3300	2230	3250	4000	2500	4000	5500	3225	5680	8000	3750	8000	—	—	11300
4	3880	2650	—	4580	3350	4500	5500	3750	5700	7750	4500	7810	11000	5250	11000	—	—	15700
5	—	—	—	—	—	7880	—	—	9680	—	—	13700	—	—	19300	—	—	27000
6	—	—	—	—	—	12600	—	—	15500	—	—	22000	—	—	31000	—	—	43700

RISERS

3/4	—	48	—	—	48	143	—	48	175	—	48	249	—	48	350	—	—	494
1	—	113	—	—	113	244	—	113	300	—	113	426	—	113	600	—	—	848
1 1/4	—	248	—	—	248	388	—	248	475	—	248	675	—	248	950	—	—	1340
1 1/2	—	375	—	—	375	815	—	375	1000	—	375	1420	—	375	2000	—	—	2830
2	—	750	—	—	750	1360	—	750	1680	—	750	2380	—	750	3350	—	—	4730
2 1/2	—	—	—	—	—	2180	—	—	2630	—	—	3800	—	—	5350	—	—	7560
3	—	—	—	—	—	3250	—	—	4000	—	—	5680	—	—	8000	—	—	11300
3 1/2	—	—	—	—	—	4500	—	—	5500	—	—	7810	—	—	11000	—	—	15700
4	—	—	—	—	—	7880	—	—	9680	—	—	13700	—	—	19300	—	—	27000
5	—	—	—	—	—	12600	—	—	15500	—	—	22000	—	—	31000	—	—	43700

APPENDIX 76 - III

(Relating to Section SBC 7638 of this Code)

1. Hot Water -- Closed System

Water to be Circulated (G.P.M.). The gallons per minute to be circulated for any given system shall be calculated from the following formula:

$$G.P.M. = \frac{\text{Total Heat Loss, Btu per hour}}{20 \times 60 \times 8}$$

Where:

20 = 20 degree temperature drop
60 = minutes per hour
8 = pounds per gallon , water at 215°F.

2. Equivalent Length of Pipe

~~(1)~~ A. The length of pipe in the longest circuit shall be measured and the number of fittings determined.

~~(2)~~ B. The total equivalent length of these fittings in terms of the average pipe size shall be calculated and added to the actual length to give the total equivalent length.

~~(3)~~ C. Appendix III Table ~~1~~ 76-A gives the elbow equivalents for different types of fittings. Appendix III Table ~~2~~ 76-B gives the equivalent length of pipe for 90 degree elbows for various flow rates.

~~(4)~~ D. Loss of Head

~~(a)~~ 1. The loss of head in one elbow can be expressed in terms of the velocity head by the formula:

$$h = \frac{V^2}{2g}$$

Where:

h = the loss of head in feet
v = the velocity of approach in feet per second
$2g$= 2 x 32.2==64.4 feet per second

~~(b)~~ 2. The loss of head in tees when water is diverted at right angles through a branch of the tee varies with the per cent diverted.

~~(e)~~ 3. When the water diverted is less than 60% of that approaching the tee, the loss of head, in elbow equivalents, may be expressed as follows:

$$h^e = \frac{V_1^2}{\frac{V_2^2}{2}} \qquad \text{Formula (2)}$$

Where:

h^e = the loss of head in elbow equivalents

V_1 = the velocity of approach

V_2 = the velocity of water diverted at right angles

~~(d)~~ 4. Values in elbow equivalents for the most common percentages of water diverted in a 1x1x1 inch tee are as follows:

25% = 16.0 33% = 9.0 50% = 4.0 100% = 1.8

~~(e)~~ 5. For other percentages the approximate values may be secured by interpolation. When the water is diverted from the tee into a smaller size branch as in a 1x1x3/4 inch tee, approximate values may be secured by means of Formula (2).

~~(f)~~ 6. In small systems the equivalent length can be estimated by adding a percentage to the measured total length of the circuit, usually 50%.

3. Size of Pipe to be installed

~~(1)~~ A. Having determined the equivalent length of pipe in the longest circuit and the total gallons per minute for the entire system, the sizes of pipes to be installed throughout the various parts of the systems shall be determined from Appendix III, Table 3 76-C.

~~(2)~~ B. The following example will illustrate the method of using said Table: Taking as an example a system of 235,000 Btu total radiation and a calculated equivalent length of 285 feet, the procedure would be as follows:

$$\frac{235{,}000}{20 \times 60 \times 8} = 24.5 \text{ gallons per minute}$$

Reading down the left-hand column of Appendix III Table 3 76-C 25 gallons per minute is found to be the closest figure. Reading across to the right, 283 feet appears to be the equivalent length

most nearly that of the one under consideration. Reading down from this figure to the column of friction resistance, it is found that the resistance in milinches per foot is 360. Using this figure, all of the various pipe sizes can be selected for their actual capacity in the lower part of the table. The final calculation for total resistance in feet of head is made by multiplying milinch resistance by the equivalent length of the longest circuit and converting to feet. In this instance --

$$\frac{283 \times 360}{12 \times 1000} = 8.5 \text{ feet}$$

12 = inches per foot
1000 = milinches per inch

~~(3)~~ C. Consequently, the pump in this instance should be one capable of circulating 25 G.P.M. against an 8.5 foot head. It is particularly important that the pump installed shall have an actual capacity equal to that required. Otherwise, regardless of boiler capacity, pipe sizes and radiation amounts, the system will not deliver the required heat.

APPENDIX III TABLE NO.-1 76-A

IRON AND COPPER ELBOW EQUIVALENTS

FITTING	Iron Pipe	Copper Tubing
Elbow, 90 deg.	1.0	1.0
Elbow, 45 deg.	0.7	0.7
Elbow, 90 deg. long turn	0.5	0.5
Elbow, welded, 90 deg.	0.5	0.5
Reduced Coupling	0.4	0.4
Open return bend	1.0	1.0
Angle radiator valve	2.0	3.0
Radiator or convector	3.0	4.0
Boiler or Heater	3.0	4.0
Open gate valve	0.5	0.7
Open globe valve	12.0	17.0

APPENDIX III TABLE NO.-2 76-B

EQUIVALENT LENGTH OF PIPE FOR 90 DEGREE ELBOWS

	PIPE SIZE														
Vel. FPS	½	¾	1	1¼	1½	2	2½	3	3½	4	5	6	8	10	12
1	1.2	1.7	2.2	3.0	3.5	4.5	5.4	6.7	7.7	8.6	10.5	12.2	15.4	18.7	22.2
2	1.4	1.9	2.5	3.3	3.9	5.1	6.0	7.5	8.6	9.5	11.7	13.7	17.3	20.8	24.8
3	1.5	2.0	2.7	3.4	4.2	5.4	6.4	8.0	9.2	10.2	12.5	14.6	18.4	22.3	26.5
4	1.5	2.1	2.8	3.7	4.4	5.6	6.7	8.3	9.6	10.6	13.1	15.2	19.2	23.2	27.6
5	1.6	2.2	2.9	3.9	4.5	5.9	7.0	8.7	10.0	11.1	13.6	15.8	19.8	24.2	28.8
6	1.7	2.3	3.0	4.0	4.7	6.0	7.2	8.9	10.3	11.4	14.0	16.3	20.5	24.9	29.6
7	1.7	2.3	3.0	4.1	4.8	6.2	7.4	9.1	10.5	11.7	14.3	16.7	21.0	25.5	30.3
8	1.7	2.4	3.1	4.2	4.9	6.3	7.5	9.3	10.8	11.9	14.6	17.1	21.5	26.1	31.0
9	1.8	2.4	3.2	4.3	5.0	6.4	7.7	9.5	11.0	12.2	14.9	17.9	21.9	26.6	31.6
10	1.8	2.5	3.2	4.3	5.1	6.5	7.8	9.7	11.2	12.4	15.2	17.7	22.2	27.0	32.0

APPENDIX III TABLE NO.-3 76-C

HOT WATER HEATING--PIPE SIZES

G.P.M	EQUIVALENT LENGTH OF PIPE—AVERAGE SIZE											
2.5	100	120	150	200	225	250	300	375	400	450	510	600
5	84	100	125	167	188	208	250	312	333	375	425	500
7.5	66	80	100	133	150	167	200	250	270	300	340	400
10	116	140	175	223	263	291	350	437	463	525	595	700
12.5	100	120	150	200	225	250	300	375	400	450	510	600
15	150	180	225	300	337	375	450	562	593	675	758	900
17.5	140	150	210	280	318	353	425	530	563	632	720	850
20	133	160	200	266	300	333	400	500	533	600	685	800
22.5	116	140	175	223	263	291	350	437	463	525	595	700
25	283	340	425	566	638	706	850	1062	1103	1275	1417	1700
30	274	330	412	550	620	685	825	1030	1085	1235	1390	1650
35	236	320	400	533	600	666	800	1000	1070	1200	1370	1600
40	219	300	375	500	563	623	750	937	973	1125	1252	1500
45	217	260	325	433	488	540	650	812	843	975	1088	1300
50	183	220	275	366	413	457	550	687	713	825	923	1100
55	390	470	587	782	882	972	1175	1468	1566	1757	1903	2350
60	383	460	575	766	863	955	1150	1437	1533	1725	1897	2300
65	366	440	550	733	825	916	1100	1375	1466	1650	1885	2200
70	349	420	525	700	788	872	1050	1312	1363	1575	1737	2100
75	333	400	500	666	750	833	1000	1250	1333	1500	1715	2000
80	317	380	475	633	713	789	950	1187	1233	1425	1577	1900
85	300	360	450	600	675	750	900	1125	1200	1350	1540	1800
90	266	320	400	533	600	666	800	1000	1070	1200	1370	1600
95	233	280	350	465	525	580	700	875	933	1050	1200	1400
100	200	240	300	400	450	500	600	750	800	900	1030	1200
110	400	480	600	800	900	1000	1200	1500	1600	1800	2030	2400
120	333	400	500	666	750	833	1000	1250	1333	1500	1715	2000
130	266	320	400	533	600	666	800	1000	1070	1200	1370	1600
140	200	240	300	400	450	500	600	750	800	900	1030	1200
150	317	620	775	1023	1163	1290	1550	1935	2060	2325	2620	3100
160	466	560	700	933	1050	1167	1400	1750	1870	2100	2370	2800
170	400	480	600	800	900	1000	1200	1500	1600	1800	2030	2400
180	333	400	500	666	750	833	1000	1250	1333	1500	1715	2000
190	266	320	400	533	600	666	800	1000	1070	1200	1370	1600
200	200	240	300	400	450	500	600	750	800	900	1030	1200

APPENDIX III TABLE NO.-3 76-C continued

FRICTION HEAD IN MIL INCHES PER FOOT OF PIPE

	360	300	240	180	160	144	120	95	90	80	70	60
BTU CAPACITY OF VARIOUS PIPE SIZES IN M. B. H.												
½"	15.5	13	12.4	10	9.6	9	8.2	6.8	6.7	6.3	6.0	4.8
¾"	31	29	26.4	22	20.6	19.6	17.2	14.6	14.	13.	12.5	11.
1"	59	53	47	40	38	36	32	30	28	27	24	23.5
1¼"	124	118	101	85	80	77	69	62	58	55.6	51	48
1½"	193	175	155	132	124	120	106	93	90	83	78	71
2"	360	322	287	248	235	223	198	169	170	160	148	137
2½"	620	551	500	440	395	380	340	300	290	270	250	230
3"	1100	1090	900	760	710	660	600	540	510	480	440	410
3½"	1709	1500	1320	1120	1050	1000	900	800	770	730	670	610
4"	2350	2100	1900	1610	1500	1420	1280	1100	1030	1000	940	850
4½"	3300	3050	2700	2300	2000	1800	1650	1450	1400	1310	1250	1200
5"	4600	4100	3600	3000	2750	2600	2300	2200	2100	1950	1800	1700

TOTAL FRICTION HEAD IN FEED--EQUIVALENT LENGTH X MIL INCHES

12X1000

7701 N.C.

SBC 7702 is amended to read as follows:

SBC 7702 General Requirements

~~(1)~~ 1. For the purpose of this code, the minimum quantity and quality of outside and recirculated air for ventilation and air conditioning purposes shall be in compliance with the requirements of this chapter.

~~(2)~~ 2. The ventilation requirements, as herein stated, shall apply to every room hereafter designed, erected, altered, or converted for the purposes enumerated.

~~(3)~~ 3. Heating Systems Required. Heating systems complying with the requirements of this code shall be provided, maintained, and operated for all occupied areas within the scope of this code. See Chapter 73, "Load Calculations - Heating - Cooling and Ventilating", and Chapters 75, 76 and 83.

SBC SBC

~~(4)~~ 4. Cooling Systems. Cooling systems complying with the requirements of this code may be provided, maintained, and operated for occupied areas within the scope of this code. See Chapters 73 and 78.

SBC

~~(5)~~ 5. Ventilating Systems Required. Ventilating systems complying with the requirements of this code shall be provided, maintained, and operated to accomplish required ventilation for all occupied areas within the scope of this code.

~~(6)~~ 6. Exhaust Systems. Exhaust systems shall discharge the air in such a manner whereby the discharge from the system wil be prevented from contaminating the breathing zone inside the building or re-entering any occupied area.

~~(7)~~ 7. Air Supply.

~~(a)~~ A. Where ventilation is secured by exhaust methods, a supply of outside air shall be provided to replace the air exhausted from the area, if the volume of air exhausted exceeds one air change per hour. ~~It is desirable that the air supply should be tempered.~~ The air supply shall be tempered if required on an occupancy basis or if necessary to prevent freezing temperatures.

~~(b)~~ B. The heat generated by kitchen appliances or other internal heat sources may be conserved by mixing room air with a quantity of outside air provided that dampers and temperature controls are designed into the system to maintain a minimum supply temperature of not less than 55 degrees F.

~~(8)~~ 8. Contamination of Adjacent Area. All equipment and service rooms, which house sources of odors, fumes, noxious gases, excessive smoke, steam, dust, spray, or other contamination detrimental to health, safety, or comfort shall be ventilated in a manner which prevents spreading of any such contamination to other parts of the building.

~~(9)~~ 9. Final Test Required. The performance of every heating, ventilating, and air conditioning air distribution system shall be tested and balanced in place. Whenever plans, specifications, and other data are required, a written record of the final results of such testing and balancing shall be made and a copy thereof filed with the administrative authority.

SBC 7703 Numbering had been editorially changed.

SBC 7703 Drawings, Specifications, and Data

~~(1)~~ 1. Approval of Drawings and Specifications. Complete drawings, specifications, and data sheets in duplicate for heating, ventilating, and air conditioning of all classes of buildings and occupancies within the scope of this code shall be submitted in order to evaluate compliance with this code. Approval shall be obtained before the effected work is begun.

~~(2)~~ 2. Approval of Changes on Drawings. Where it is necessary to change the approved drawings or specifications covered by this code, revised drawings in duplicate shall be submitted in order to evaluate compliance with this code before the effected work is begun.

~~(3)~~ 3. Information Required on Drawings and in Specifications. All information shown on the drawings shall be permanent, clear, legible, and complete, and shall include all details and data necessary for review of the proposed installation, such as:

~~(a)~~ A. Name of the owner of the building.

~~(b)~~ B. Proper address of the building.

~~(c)~~ C. Architect, engineer, or designer's name shall appear on the title sheet.

~~(d)~~ D. A floor plan for each floor where equipment is installed shall be furnished as part of the set of drawings.

~~(e)~~ E. A room schedule, indicating the intended use of all rooms.

~~(f)~~ F. Elevation and sectional plans to illustrate and clarify equipment arrangements.

~~(g)~~ G. Location, size, and type of all principal units of equipment.

~~(h)~~ H. Size and continuity of all ducts and vents.

~~(i)~~ J. Description and location of chimney or chimneys.

~~(j)~~ K. Specifications shall be properly identified with and completely supplement the drawings.

~~(4)~~ 4. Data Required. All drawings submitted for review shall be accompanied by data indicating sufficient information to determine if the capacity of the equipment and the performance of the system will meet the minimum requirements of this code. The following data shall be submitted:

~~(a)~~ A. Heat loss calculated in BTU per hour.

~~(b)~~ B. Cooling load calculated in BTU per hour.

~~(c)~~ C. Ventilation requirements and calculations.

~~(d)~~ D. Summation of total heating, ventilating, and cooling requirements.

SBC 7704 Numbering has been editorially changed.

SBC 7704 Design Requirements.

~~(1)~~ 1. Installation of Equipment. All heating, ventilating, air conditioning and refrigeration installations shall be designed and installed to provide the service and results required by this code.

~~(2)~~ 2. Air Cleaning Apparatus. Where air cleaning apparatus is installed, it shall be accessible for maintenance.

~~(3)~~ 3. Maximum Inlet Temperature. The room inlet temperature of air leaving the register or grills used for heating and ventilating purposes shall be designed on the basis not to exceed 140 degrees F.

~~(4)~~ 4. Air Quantity. The quantity of air used to ventilate a given space during periods of occupancy shall be sufficient to maintain the standards of air temperature, air quality, air motion, and air distribution as required by this code.

~~(5)~~ 5. Controls. Where ventilation is required by this code, controls shall be provided so that the minimum air circulation, supply, and exhaust shall be maintained during periods of occupancy.

SBC 7705 Numbering has been editorially changed.

SBC 7705 Occupancy Classification. The various occupancies to which the provisions of this code apply are classified as follows:

Class 1. Those which require ventilation on an occupancy basis.

Class 2. Those which require supply or exhaust ventilation on an occupancy basis unless otherwise exempted.

Class 3. Those which require exhaust.

Class 4. Those which require ventilation on the basis of floor area.

NOTE: The following ~~(Table 1)~~ 77-A indicates the individual classifications of occupancies within the scope of this code together with the method to be used in establishing the number of persons for which ventilation is to be provided.

SBC 7706 Numbering has been editorially changed.

CLASS 1 AND 2

SBC 7706 General Requirements for Occupancies Under ~~(1) and (2) Classifications~~ CLASS 1 & 2

~~(1)~~ 1. Scope. The requirements of SBC 7706 shall apply to all occupancies listed under ~~(1)~~ and ~~(2)~~ in Table ~~1~~, 77-A, unless otherwise exempted by this code.

~~(2)~~ 2. Air Movements. The total air circulated (recirculated plus outside air) for all occupancies in this classification shall not be less than 6 air changes per hour unless otherwise provided by this code.

~~(a)~~ A. The air delivery capacity of all equipment supplying air for heating, ventilating, and air conditioning purposes shall be based on standard air rating (70 degrees db and 29.92 inches).

~~(b)~~ B. For installations, where cooling is provided and the heat gain requirements for the space have been satisfied, an air movement of less than 6 air changes per hour may be permitted.

~~(3)~~ 3. Outside Air Supply. The outside air supply during occupancy shall not be less than 7 1/2 cubic feet per minute per occupant and an equal amount shall be exhausted unless otherwise exempted by this code. See SBC 7705 for method used in determination of capacity.

~~(4)~~ 4. Air Distribution. All air outlets and returns shall be so located, arranged, or equipped to provide distribution of air without objectionable air motion.

~~(5)~~ 5. Recirculation. No air contaminated by other than human occupancy shall be used for recirculation, except within the same occupancy classification.

~~(6)~~ 6. Automatic Controls. Automatic controls shall be provided to maintain temperature and ventilation to satisfy the following conditions during periods of occupancy.

~~(a)~~ A. Provide a continuous air movement of not less than the minimum required by this code.

~~(b)~~ B. Provide a supply of tempered outside air as determined by the number of occupants of not less than 7 1/2 cubic feet of air per minute per person.

~~(c)~~ C. Maintain design temperature.

~~(7)~~ 7. Air Cleaning Devices. Approved air cleaning devices shall be installed in a manner to filter the outside air and recirculated air used with mechanical heating and ventilating systems except as follows:

~~(a)~~ A. Filters are not required for use with unit heaters designed for heating and recirculation.

~~(b)~~ B. Where jet systems or blend air systems are approved, air filters are not required in the ducts that are installed for the recirculation of air within the same occupied space.

NOTE: Filters carrying the Fire Underwriters' ~~approved~~ LABORATORY label will be recognized as approved.

STRIKE

SBC 7707 Numbering has been editorially changed.

SBC 7707 General Requirements: Places of Assembly.

~~(1)~~ 1. Scope. This classification shall include all occupancies such as areanas, armories, assembly halls, banquet halls, billiard rooms, bowling alleys, cafeterias, club rooms, dance halls, dining rooms, restaurants, school auditoriums, skating rinks, and theaters.

NOTE: The above occupancies which accommodate less than 100 persons shall conform to the requirements of SBC 7717.

~~(2)~~ 2. Air Movement, Supply, and Distribution. The air movement, supply, and distribution for all occupancies under this classification shall conform to the requirements of SBC 7706.

~~(a)~~ A. For theaters, assembly halls, gymnasiums, and similar occupancies having a ceiling height of 15 feet or more, the total air supply shall be based on at least 6 air changes per hour.

~~(b)~~ B. For theaters, assembly halls, gymnasiums, and similar occupancies having a ceiling height of less than 15 feet, the total air supply shall be based on at least 7 1/2 air changes per hour.

~~(3)~~ 3. Stages. The stage in any theater or assembly hall for which a fire curtain is required, shall be supplied with sufficient air or other means to equalize the pressure to avoid deflecting the curtain.

~~(4)~~ 4. Alternate Service and Capacity. Heating and ventilating systems installed in ~~so-called~~ community buildings and lodge halls may be arranged for selective delivery of the entire supply to either the first floor or to the basement floor area provided these areas are not used simultaneously.

SBC 7708 Numbering has been editorially changed.

SBC 7708 General Requirements: Churches, Etc.

~~(1)~~ 1. Scope. This classification shall include auditoriums, social assembly rooms, Sunday School rooms, and similar areas which are part of churches or houses of worship. It shall also include chapels used in connection with funeral homes, as well as those in parochial schools, convents, and similar occupancies.

~~(2)~~ 2. Air Movement, Supply, and Distribution. The air movement supply, and distribution for all occupancies under this classification shall conform to the requirements of SBC 7706 except that no ventilation will be required where the total openable area of the outside doors and windows is greater than 3% of the floor area served, or that in funeral homes the openable area of the outside doors and windows shall be greater than 5% of the floor area served.

~~(3)~~ 3. Alternate Service. Heating and ventilating systems installed in occupied areas of this class may be arranged for selective delivery of the required supply to either the auditorium floor area or to the basement floor area provided these areas are not used simultaneously.

SBC 7709 Numbering has been editorially changed.

SBC 7709 General Requirements: Motion Picture Booths

~~(1)~~ 1. Inlet. Fresh-air inlets shall be provided from the exterior of the building and shall have an area not less than one square foot protected with wire screen and installed within two inches of the projection room floor. Fresh-air inlets other than those directly to the outside shall be protected by approved fire shutters.

~~(2)~~ 2. Exhaust.

~~(a)~~ A. Ventilation shall be provided by one or more mechanical exhaust systems which shall draw air from each arc lamp housing and from one or more points near the ceiling. Systems shall exhaust to the outdoors either directly or through an incombustible flue used for no other purpose. The ventilation rate shall be not less than 15 cfm nor more than 50 cfm for each arc lamp plus 200 cfm for the room itself.

Systems shall be controlled from within the enclosure and have pilot lights to indicate operation. The exhaust system serving the projection room may be extended to cover rooms associated therewith, such as re-wind rooms. No dampers shall be installed in such exhaust systems.

~~(b)~~ B. Exhaust ducts shall be of incombustible material and shall either be kept one inch from combustible material or covered with one-half inch of incombustible insulation.

~~(3)~~ 3. Shutters.

~~(a)~~ A. Each port and every other opening in projection room walls, including any fresh-air inlets, but excluding exit doors and exhaust ducts, shall be provided with a shutter of not less than 10 U.S. Gauge sheet metal or its equivalent large enough to overlap at least one inch on all sides of such opening.

Shutters shall be arranged to slide without binding in guides constructed of material equal to the shutters in strength and fire resistance. Each shutter shall be equipped with a 165 degree F. fusible link, which when fused by heat will cause closure of the shutter by gravity. There shall also be a fusible link over the upper magazine of each projector, which upon operating, will close all the shutters. In addition, there shall be provided a suitable means for manually closing all shutters from any projector head and from a point within the projection room near each exit door.

~~(b)~~ B. Shutters may be omitted when acetate (safety) film only is used.

SBC 7710 Numbering has been editorially changed.

SBC 7710 General Requirements: Schools

~~(1)~~ 1. Scope. This classification shall include all class, study, recitation, lecture, project rooms, kindergartens, library, reading rooms, and similar areas in all school, college, and library buildings used for educational purposes. (See Section SBC 7706 for assembly rooms.)

~~(2)~~ 2. Air Movement and Supply. The air movement and supply for all occupancies under this classification shall conform to the requirements of SBC 7705. For corridors and halls used in conjunction with occupied areas of this class the air movement shall not be less than 10 cfm per lineal foot of corridor or hall. This air supply shall be accomplished by means of air inlets admitting air from direct tempered air supply.

SBC 7711 is amended to read as follows:

SBC 7711 General Requirements: Laboratories, Etc.

~~(1)~~ 1. Scope. This classification shall include all places for vocational instruction and research, such as laboratories, school shops, domestic science rooms, and similar occupied areas.

~~(2)~~ 2. Air Movement and Supply. The air movement and supply for all occupancies under this classification shall conform to the requirements of SBC 7705.

~~(3)~~ 3. Equipment and Process Exhaust. An exhaust ventilating system shall be provided in connection with all equipment and processes which create any dusts, fumes vapors, or gases which may be injurious.

~~(4)~~ 4. Separate Exhaust Systems. Exhaust systems serving this classification shall be separate from, and independent of all other services and systems in the building with outlets and ducts discharging directly to the outside of the building.

SBC 7712 Numbering has been editorially changed.

SBC 7712 General Requirements: Wardrobes and Locker Rooms, Etc.

~~(1)~~ 1. Scope. This classification shall include all wardrobes, cloakrooms, locker rooms, and similar areas in all buildings within the scope of this code, except as noted herein.

~~(2)~~ 2. Ventilation Required. Ventilation shall be provided and maintained for all areas of this class. Wherever practicable, such ventilation shall be accomplished by exhaust methods and in any case the volume of the exhaust shall be greater than that of the supply.

~~(3)~~ 3. Minimum Air Movement. The air movement provided and maintained for areas of this class shall be not less than 2 cubic feet per minute per square foot of floor area.

~~(4)~~ 4. Wardrobes and Coat Rooms in School Buildings. Where necessary in order to insure practical results in wardrobes or coat rooms adjacent to or connected with occupied areas covered by SBC 7814, the required ventilation shall be accomplished by use of inlets admitting air from adjacent classrooms, or corridors, or similar areas in conjunction with outlets and ducts discharging directly to the outside of building.

~~(5)~~ 5. Locker Rooms in Conjunction with Toilet, Bath, and Swimming Rooms. Occupancies in this classification are required to have a tempered air supply which may be exhausted through the adjoining toilet, shower, or swimming rooms.

~~(6)~~ 6. Fresh Air and Rest Rooms. Ventilation shall be provided for all areas of this class to conform to the requirements of SBC 7706. Mechanical ventilation is not required where the total sahs area is greater than 10% of the floor area and where the openable area is at least 5%.

SASH

SBC 7713 is amended to read as follows:

SBC 7713 General Requirements: Toilets, Pools, Etc.

~~(1)~~ 1. Scope. This classification shall include all toilets, bath and swimming pool rooms, janitor closets, sterilizing rooms, and similar spaces.

~~(2)~~ 2. ~~Gravity or~~ Mechanical exhaust ventilation shall be provided for all such rooms or space except for rooms or spaces having not more than one bathroom group (water closet, bidet, lavatory, bathtub and/or shower) if said room or space has a minimum window area of three square feet, ~~half of~~ which is openable.

~~(3)~~ 3. Air Movement and Supply.

~~(a)~~ A. The air movement, provided and maintained in janitor closets, sterilizing rooms and similar spaces shall not be less than 2 cubic feet per minute per square foot of floor area.

~~(b)~~ B. Rooms or spaces having one bathroom group as provided above or less and no openable outside window shall be ventilated at the rate of one cubic foot per minute per square foot of floor area.

~~(c)~~ C. Toilet rooms having more than one bathroom group as provided above shall be ventilated at the rate of two cubic feet per minute per square foot of floor area.

~~(d)~~ D. The air movement in swimming pool areas and public baths shall not be less than 6 air changes per hour and the tempered air supplied and exhausted shall not be less than 2 cubic feet of air per minute per square foot of pool surface.

~~(4)~~ 4. Separate Exhaust Systems. Exhaust systems serving this class of occupancy shall be separate from, and independent of all other services in the building.

5. Vents for Toilets and Baths

A. There shall not be more than three individual toilet room ducts, each not exceeding three (3") inches in diameter, in any single stud space.

B. The stud space shall be completely enclosed on all sides with material having a fire resistive rating at least equal to 5/8 inch gypsum wall board and having a heat transmission rating not greater than 5/8 inch gypsum wall board.

C. The fire protective material shall be continuous throughout the length of the shaft.

D. The voids in stud spaces shall be filled with a non-combustible insulation.

E. Horizontal sections of these ducts shall be enclosed as the above vertical ducts.

F. Not more than three (3) toilet room ducts, each not exceeding three (3") inches in diameter, may be enclosed in a single unprotected stud space provided that the openings in the ceiling or wall of the cellar or basement are protected with approved fire dampers and the stud space is filled with a non-combustible insulation or the stud space is fire stopped at each floor line.

G. Vertical shafts enclosing a greater number of ducts or ducts of greater size than permitted in 5-A above, shall be constructed of fire resistive material as required for the type of construction.

SBC 7714 is amended to read as follows:

SBC 7714 General Requirements: Commercial Kitchens

~~(1)~~ 1. Scope. This classification shall include all areas housing cooking of food in all buildings within the scope of this code, except residences~~,-and-those-classified under-vocational-instruction~~.

A. Plans pertaining to installations regulated by SBC 7714 shall include the following information:

1. The hood dimensions and design.

7714

2. The volume of air exhausted and square feet of canopy opening.

3. The number of filters required and size.

4. The size and length of ducting from the hood to the point of discharge.

5. The design static pressure of the system.

6. Fire damper design or extinguishing system installed.

7. The size, model, R.P.M., outlet velocity and current characteristics of the fan required.

8. The makeup air provisions.

9. Protection of combustible materials.

~~(2)~~ 2. Exhaust Ventilation. The exhaust ventilation required and maintained for every occupied area of this class shall not be less than 4 cubic feet per minute per square foot of floor area except that kitchens used occasionally in connection with church auditoriums, lodge halls, and schools the exhaust ventilation may be reduced to a minimum of 2 cubic feet per minute per square foot of floor area.

~~(3)~~ 3. Hoods. The design of range hoods shall provide for the effective removal of greasy fumes and excess heat. Acceptable hood designs, air volumes, and air velocities are shown in Figures 77-1,2, ~~and~~ 3,4,5, and 6.

~~(a)~~ A. Hoods over cooking or similar appliances must be constructed of noncombustible materials throughout, with tight sides and tops and have at least 18 inch clearance from all unprotected combustible materials.

~~(b)~~ B. The length and width of kitchen hoods must extend beyond the extreme projection of the ranges, broilers, etc., over which they are installed. The minimum projection or overlap shall be six inches.

~~(c)~~ C. Where space conditions permit, range hoods should be two feet high to provide a reservoir to confine momentary bursts of smoke and steam until the exhaust system can evacuate the hood. Range hoods must be located as low as possible to increase their effectiveness, and not more than seven feet (7') from the floor.

7714

~~(d)~~ D. Exhaust connections to range hoods shall always be made at the top or back of hoods, and shall be spaced ~~preferably~~ not more than six feet (6') apart. Exhaust ducts shall be sized to maintain a velocity of ~~2000~~ 1500 to ~~3000~~ 2200 feet per minute. Velocity greater than 2200 feet per minute shall be subject to the administrative authority.

E. Pans: When a canopy is designed with a baffle and slot arrangement, the baffle pans shall be inclined from the horizontal so that grease drippings will be collected into the canopy trough. Such procedure will prevent the grease and condensation from falling onto the food preparation area. Minimum pitch for pans shall be 1" in 12".

F. Dishwasher Hoods: Dishwasher hoods shall be designed to convey vapors from the dishwasher service openings at a velocity not less than 500 feet per minute. Where slotted type hoods are provided, the slot depth shall be not less than three (3) inches and the slot width shall be equal to the width of the service openings. Hoods shall be located directly above and as close to the service opening as required operating clearances of the dishwashing machine will permit.

G. Diet Kitchen Range Hoods, Steam Tables, Steam Kettles, Bain Maries: Wherever hoods are provided for food preparation operations other than those emitting grease laden vapors, they shall be designed at a face velocity of not less than 50 feet per minute. Wherever ducts from such hoods are connected to a system conveying grease laden vapors, they shall enter such system through a collar with an approved fire damper at the point of attachment to the main duct system.

~~(4)~~ 4. Ducts. Ducts for carrying off greasy vapors and excess heat shall be of not less than No. 18 U.S. Gauge steel with grease-tight joints made by welding or equal processes.

~~(a)~~ A. All duct work shall be properly secured to ceiling or joists or supported by substantial brackets when run along the walls.

~~(b)~~ B. Exhaust ducts must have no connection with other house ventilating systems. They must not be connected to stacks, chimneys, or flues used for other purposes.

7714

~~(c)~~ C. Exhaust piping to range hoods, commonly called grease ducts, shall be provided with tight fitting cleanout doors of adequate size located every 10 feet on horizontal ducts but not located on the bottom of a duct. An approved type of filter shall be installed in all ducts or hoods over ranges, fry kettles, or any other cooking device where grease may accumulate.

~~(d)~~ D. ~~Ducts or vents connected to range hoods passing through or near combustible construction shall be installed in accordance with the National Fire Protection Association Standard for Ventilation of Restaurant Cooking Equipment.--NFPA No. 96, Section 3. Ducts.~~ Ducts shall be substantially built and separated eighteen (18) inches from conbustible material, and if closer than eighteen (18) inches to any combustible materials they shall be protected with two (2) inches of glass wool insulation, or equal, and covered with a metal shield enclosing the face and edges of the insulation. Such protecting shield shall be applied to the conbustible material and shall extend six (6) inches beyond the limits of the duct dimension. Also see clearance chart following. Ducts penetrating combustible walls, partitions, ceilings or roofs shall be provided with an approved safety thimble constructed in a manner providing for one (1) inch or air space between the duct and a metal sleeve plus one (1) inch of glass wool insulation, or equal, plus an external metal sleeve confining the insulation within the two sleeves, such safety thimble shall extend not less than six (6) inches on both sides of the walls, partitions, ceilings or roofs. See safety thimble Figures 77-5 and 6. All cleanouts to be not more than 20" on center but all ducts shall be made accessible for cleaning by installing cleanout access opening.

Where 18 inches clearance is required to unprotected combustible material, the clearance may be reduced to that indicated below when the combustible material is protected as follows.

	Type of Protection	Clearance
1.	1/4 - inch asbestos millboard spaced out 1 inch on noncombustible spacers.....	12 inches
2.	28 gage sheet metal on 1/4-inch asbestos millboard.....	12 inches

7714

Type of Protection	Clearance
3. 28 gage sheet metal spaced out 1 inch on noncombustible spacers.....	9 inches
4. 28 gage sheet metal on 1/8-inch asbestos millboard spaced out 1 inch on noncombustible spacers..	9 inches
5. 1/4-inch asbestos millboard on 1 inch mineral wool bats reinforced with wire mesh or equivalent...	6 inches
6. 22 gage sheet metal on 1 inch mineral wool bats reinforced with wire or equivalent.....	3 inches

~~(e)~~ E. Manufactured chimneys may be used without additional fire-resistive protection provided that such chimneys have been approved for use with low-heat appliances and tests for a continuous temperature of not less than 1000 degrees F. and 1400 degrees F. for infrequent periods.

F. Changes in size of ducts shall be by means of a taper transformation piece, the included angle of the taper being not more than 30° wherever possible.

G. Vertical risers should be located outside of and adequately supported by the exterior building wall. If absolutely necessary to locate the riser inside the building, it shall be enclosed in a shaft preferably constructed of masonry at least the equivalent of four-inch hollow tile, extending continuously from the first floor pierced and through the roof. Access openings shall be provided in the enclosure at each cleanout point. At the base of each vertical riser a residue trap shall be provided with provisions for cleanout.

H. Hoods designed for horizontal or vertical air flow over the cooking areas shall have an air velocity of not less than 100 cfm/square feet of the entire hood opening including ends if opened. (See Figures 77-1,2, and 3.

7714

J. Hoods designed with a perimeter slot shall have a slot opening of not less than two (2) inches nor more than four (4) inches, and shall maintain a minimum air velocity through the slot opening of 250'/M.

~~(5)~~ 5. Filter requirements for kitchen hoods.

1. Number of filters shall be based on not more than 3 cfm for each square inch of filter area and shall be installed between 45 degrees to 60 degrees to horizontal.

2. Filter mounting height.

   a. No exposed cooking flame - 2 1/2 foot minimum to lowest edge of filter.

   b. Charcoal and similar fires - 4 1/2 foot minimum to lowest edge of filter.

   c. Other exposed fires - 3 1/2 foot minimum to lowest edge of filter.

3. An easily removable grease drip pan shall be provided and it should be pitched so that it will drain into the gutters of the hood.

4. Filter media shall be non-~~inflammable.~~ combustible.

SBC 7715 Numbering has been editorially changed.

SBC 7715 Residential Ventilation.

~~(1)~~ 1. When power exhaust fans are used for range or range hood ventilation in the kitchen of single, double, or multiple dwellings, the installation shall comply with the following requirements:

   ~~(a)~~ A. All ducts shall be galvanized iron of not less than 28 gauge.

   ~~(b)~~ B. All seams in the duct system shall be tight. Pressure sensitive tape or other methods approved by the administrative authority can be used.

~~(c)~~ C. Back draft dampers shall be provided near the outlet of the duct. These shall be in the closed position when the fan is not operating.

~~(d)~~ D. A one-half inch mesh screen shall be installed at each exhaust outlet.

~~(e)~~ E. Fans and duct systems shall be designed to permit cleaning and servicing.

~~(f)~~ F. Insulation Required. Whenever a duct or fan scroll lies within 6 inches of a combustible material, it shall be insulated with 1/2 inch glass fiber insulation, two layers of 12-pound asbestos paper or the equivalent.

~~(g)~~ G. When a kitchen range hood faces a combustible material less than 30 inches above the cooking surface, the hood shall be separated from the combustible material by 1/4 inch asbestos board or equivalent.

~~(h)~~ H. Ducts passing through unheated spaces shall be insulated with a minimum of one inch of glass fiber insulation or equivalent.

~~(i)~~ J. Ducts located in a heated space shall be insulated with one inch of glass fiber insulation or equivalent for a distance of three feet from the duct outlet.

~~(2)~~ 2. Toilet rooms having only one fixture (water closet or urinal) and no openable outside windows shall be ventilated at the rate of at least one cubic foot per minute per square foot of floor area.

~~(a)~~ A. See ~~(h)~~ H. and ~~(i)~~ J. preceding.

SBC 7716 Numbering has been editorially changed.

SBC 7716 Offices

~~(1)~~ 1. Scope. This classification shall include areas where clerical and administrative work is the chief usage.

~~(2)~~ 2. Ventilation Required. The air movement, supply, and distribution for this classification shall conform to the requirements of SBC 7706 unless each of the following requirements has been satisfied:

~~(a)~~ A. The total openable area of outside doors and windows is not less than 3% of the floor area served.

~~(b)~~ B. The available floor space for each occupant is not less than 75 square feet per person.

~~(c)~~ C. Heat or odors are not present in sufficient quantities to be injurious to the health, safety, or comfort of the occupants.

SBC 7717 Numbering has been editorially changed.

SBC 7717 Retail Establishments

~~(1)~~ 1. Scope. This classification shall include barber shops, beauty parlors, brokerage board rooms, taverns , bowling alleys, retail establishments where goods and commodities are bought and sold, and places where not more than 100 persons assemble for recreation, entertainment, or dining purposes.

~~(2)~~ 2. Air Movement, Supply, and Distribution. The air movement, supply and distribution for all occupancies under this classification shall conform to the requirements of SBC 7706 unless the total openable area of outside doors and windows is more than 3% of the floor area served. No window or outdoor opening which is below grade will be considered unless there is a clear space outside the windows having a width of not less than one and one-half times the distance below grade at the bottom of the window.

SBC 7718 is deleted in its entirety and the following inserted in lieu thereof: (Underlining represents alterations only)

SBC 7718 Garages and Service Stations

1. Requirements for Garage Ventilation. Repair garages, storage garages and parking garages shall be provided with heating and ventilation equipment conforming to the requirements which follow. Before the heating and ventilation permits are issued, complete plans shall be submitted to the Administrative Authority for approval.

A. Exhaust Air Openings. The exhaust air openings shall be installed so as to exhaust at least 50 percent of exhausted air approximately 7 feet above floor line and at least 20 percent from the floor level. The air exhaust system shall exhaust directly to the outside through the roof or side wall. Where the air exhaust system exhausts above the roof of the garage or building, it shall terminate at least two feet above said roof. In either case such exhaust system shall not terminate within 10 feet of any window, door or other opening in said building or any adjoining building. Deviations from this requirement are subject to prior approval of the administrative authority.

B. Exhausts Duct Drop and Protection. Air exhausted from garages at the floor level other than tailpipe exhaust, shall be drawn from a maximum of 12 inches above the floor of the area being served. Each exhaust duct opening shall be cut on an angle so the grill covering may be cleaned easily. Each exhaust duct shall be protected by a guard rail made of not less than 2"x2"x1/4" steel angle iron or other construction of equivalent strength and shall be carried to the height of at least 30" above the floor adjacent to such exhaust duct unless protected by a column or other means of protection. (See Figure 77-7).

C. Tempered Make-Up Air. Although special equipment designed for heating the make-up air before it enters the ventilated space is desirable, the code requirement for tempered make-up air may be satisfied by the use of mechanically vented unit heaters or similar heating devices located in the garage area when they do not increase the hazards to health or safety of the occupants.

D. Continuous Fan Operation. Commercial repair garage ventilation shall be in continuous operation during the hours when work is being performed on the vehicles and for 15 minutes per hour during the balance of the twenty-four hour period.

E. Peak Period Ventilation Requirements. Parking garages, except those accessory to an apartment building, shall be in continuous operation during the hours when cars are being driven into the building or from the building in a more or less steady flow and for 15 minutes per hour during the balance of the twenty-four hour period.

VENTILATION SYSTEM

F. Parking garages accessory to apartment buildings shall ~~be in~~ continuous operation between 6:00 A.M. and 9:00 A.M. and between 4:00 P.M. and 8:00 P.M. each day and for 15 minutes per hour during the balance of the twenty-four hour period.

2. Exempted Garages. Open air parking garages, basement storage or parking garages having a capacity for three cars or less, and parking garages having an individual door for each stall shall be exempted from the provisions of this section.

3. Exhaust and Make-Up Air. Areas used for storage or parking for four or more engine driven vehicles shall be provided with an exhaust system capable of removing air at the rate of 0.75 cfm of air per square foot of floor area. An equal amount of uncontaminated air shall be supplied the area through appropriately located openings or fan systems. Storage or parking garages which must be heated to prevent freezing of water in pipes or waste traps shall be equipped with heating devices which will maintain a minimum temperature of 40°F.

   A. Location of Floor Area Ventilation. The air supply openings shall be located so as to evenly distribute the air throughout the entire garage area but no portion of the floor area shall be more than 50 feet from an exhaust opening.

4. Repair Garages. All repair garages shall be provided with an exhaust system capable of removing air at the rate of 0.75 cfm of air per square foot of floor area. An equal amount of uncontaminated air shall be supplied to the area through appropriately located openings or fan systems. Repair garages shall be equipped with heating devices which will maintain a minimum temperature of 60°F. throughout the garage. In addition, exhaust gases from internal combustion engines being tested shall be discharged to the outdoors through a duct or flexible hose ~~of non-combustible material~~ of suitable size attached to the exhaust tailpipe on the vehicle and the mechanical exhaust system.

5. Tailpipe Exhaust. ~~Each tailpipe exhaust duct or flexible hose shall be provided with a shutoff valve which may be closed when not in use.~~ The mechanical tailpipe exhaust system shall have a capacity in accordance with Table 77-B.

6. Definitions for the Purposes of SBC 7718

A. Repair Garage. As used herein, shall include all automobile, truck, or bus repair garages or body shops and shall also include facilities for the repair of other gasoline or diesel powered vehicles such as motorcycles, snowmobiles, tractors, etc.

B. Open Air Parking Garage. As used herein, shall mean and include all public storage garages having at least 50 percent of two sides open at each story and are used solely for temporary parking of motor vehicles.

C. Basement - Underground Garage. As used herein, shall be construed as enclosed spaces located partly or entirely below grade used solely for parking or storing of vehicles powered by combustion engines and such spaces shall be so classified whether they be independent structures or a portion of a structure above.

~~(7)~~ 7. No basement or sub-basement garage shall be used for repair of motordriven vehicles.

~~(8)~~ 8. Inspection and Repair Pits. Inspection and repair pits shall be provided with a ventilating system capable of assuring one complete air change every 5 minutes. Floors of such pits shall have a minimum pitch of one inch for each 10 feet. The exhaust air inlet opening or openings shall terminate in a grille which shall be perpindicular to the floor. The bottom of the openings shall extend to the floor at the lowest point or points of the pit.

~~(9)~~ 9. Service Stations. Buildings of this classification shall include liquid fuel dispensing stations where vehicles can be driven into the building for washing, greasing, oil change, tire, or battery replacement or similar operations.

~~(a)~~ A. All service rooms or work areas shall be provided with a tempered supply of outside air of not less than 1/2 cubic foot per minute per square foot of floor area and with the necessary mechanical vent or vents exhausting the same volume of air from a point not more than 18 inches above the floor.

10. General Requirements.

~~(a)~~ A. Ventilation shall be provided for showrooms or offices where such occupancies are located adjacent to repair or live storage areas and would require ventilation in accordance with SBC 7706 unless the openable area or outside doors and windows exceed 3% of the floor areas. This requirement does not apply to service stations.

~~(b)~~ B. There shall be no recirculation of air from any repair, live storage, or service area during periods of occupancy except where the total amount of air in circulation is in excess of the quantity required by this rule. The excess air may be recirculated.

SBC 7719 Numbering has been editorially changed.

SBC 7719 Penal Institutions, Etc.

~~(1)~~ 1. Scope. This classification shall include corridors and areas of compulsory occupancy in penal institutions, mental hospitals, and other places of detention.

~~(2)~~ 2. Air Movement, Supply, and Distribution. The air movement, supply, and distribution for all occupancies under this classification shall be accomplished by mechanical means and shall conform to the requirements of SBC 7704 and SBC 7705. The air movement through corridors shall be a minimum of 10 cubic feet per minute per lineal foot of corridor.

~~(3)~~ 3. Overnight Lock-ups. Where cells are provided for not more than 6 occupants for the purpose of overnight detention only, exhaust ventilation shall be provided on the basis of at least 6 air changes per hour for the occupied area.

SBC 7721 Numbering has been editorially changed.

SBC 7721 Outside Ventilating Fresh Air Intakes.

~~(1)~~ 1. Location

~~(a)~~ A. Outside air intake openings shall be located in distance of at least 20 feet horizontally or 10 feet vertically from vents and chimney outlets.

~~(b)~~ B. Where vents and intakes are located on adjacent walls of outside corners, the horizontal distance may be reduced to 10 feet.

~~(c)~~ C. Outside air intake openings located in exterior walls shall be located at least 10 feet (measured in any direction) from any exhaust vent or chimney outlet.

~~(2)~~ 2. Mounting Height.

~~(a)~~ A. Outside air intake openings shall be located at least 8 feet above the outside grade or 2 feet above roof. Exemptions of this provision must be approved.

~~(b)~~ B. Where outside air intake openings are located in any areaway below grade, the top of the areaway shall be not less than 12 inches above the grade level.

~~(3)~~ 3. Screens.

All outside air intake openings shall be provided with screening not more than one-half inch nor less than one-fourth inch mesh.

NOTE: See Table 4- 77-D for allowable velocities in the design of outside air intake openings.

~~(4)~~ 4. Weather Protection. All outside air intake openings shall be protected against weather and water with a weather resistant hood or louvers. All outside air intakes, except intakes for combustion air, shall be equipped with a damper to prevent the admission of unheated air to the building when the heating unit is not in operation.

SBC 7722 Numbering has been editorially changed.

SBC 7722 Combustion Air Intakes

~~(1)~~ 1. Fuel Inputs Above 500,000 BTU Per Hour.

~~(a)~~ A. All boiler rooms and furnace rooms shall be provided with an opening to the outside air. The free area of such opening shall not be less than one square inch for each 5,000 BTU per hour of fuel consumed, except the minimum free area of such opening shall not be less than 100 square inches.

~~(b)~~ B. The use of manual operated dampers is not approved.

~~(c)~~ C. The use of motorized dampers is approved where the motor is interconnected with the burner(s) of direct-fired equipment which will open the damper, when burner(s) is operating. The burner and damper shall be so inter-connected so that the burner shall not start before the damper is open.

~~(2)~~ 2. Fuel Inputs Less Than 500,000 BTU Per Hour.

~~(a)~~ A. Outside air to the appliance area for proper fuel combustion shall be provided by openings to the outside of the buildng or to spaces freely communicating to the outside of the building. The openings of ducts supplying such air shall have unobstructed areas not less than the area of the minimum required common flue or flues serving the heating system and other fuel burning appliances in the area, and shall discharge such outside air at a point not more than one foot above the floor.

~~(b)~~ B. Air for combustion may be introduced into the return air plenum of a forced air system provided that an unobstructed opening into the appliance area is installed in the supply side of the system. The opening shall have a minimum area of 50% of the common flue area.

~~(c)~~ C. When a furnace is installed in a small utility room or other combined space, a sufficient quantity of air must enter the space in which the furnace is located to supply both the air required for combustion and for ventilating the space to prevent it from becoming overheated.

1. Combustion air opening shall be as outlined in part ~~(a)~~ A above.

2. Ventilation air shall be supplied to the confined space through two openings to the interior of the building and located as follows:

   (a) Ventilation air outlet grille located in the wall or door at a height above the draft hood opening. The free area of the opening shall be 1/2 square inch for each 1,000 BTU per hour of input.

   (b) Ventilation air inlet grille located in the wall or door at or below combustion air inlet to burner. The free area of the opening shall be 1/2 square inch for each 1,000 BTU per hour of input.

~~(d)~~ D. Accessibility and Cleanliness. All outside air intakes shall be constructed and maintained accessible for cleaning. All openings through walls of buildings shall be not less than one foot above the grade level and be protected with screen of not more than 1/2 inch nor less than 1/4 inch mesh.

SBC 7724 Numbering has been editorially changed.

SBC 7724 Ducts for Residential Application

~~(1)~~ 1. Duct Construction. The construction of all duct work hereafter installed in connection with any warm air heating system, mechanical ventilation system or air-conditioning system shall be in accordance with the following provisions.

~~(a)~~ A. The thickness of sheet metal ductwork shall be in accordance with the gauges listed in Table ~~No.-3~~ 77-C.

~~(b)~~ B. Materials other than sheet metal may be used for the construction of ductwork when they conform to the requirements of the National Fire Protection Association Standard for the Installation of Residence Type Warm Air Heating and Air Conditioning Systems. NFPA 90B, Sections 121, 181, 182, 183, 184, and 185, Materials for Ducts, and of the Sheet Metal and Air Conditioning Contractors' National Association, Inc. duct manual "Fibrous Glass Construction for Ventilating and Air Conditioning Systems."

~~(c)~~ C. No duct smaller than 5 inches in diameter, or corresponding area for rectangular duct of equal friction loss shall be installed except for rooms with less than 75 square feet of ceiling area, or unless otherwise approved by the administrative authority.

~~(2)~~ 2. Installation Ductwork.

~~(a)~~ A. Ducts shall be securely supported by metal hangers, straps, lugs, or brackets. The ducts shall not be used for the support of any other materials or equipment.

~~(b)~~ B. No nails shall be driven through the duct walls and no unnecessary holes shall be cut in them.

~~(c)~~ C. When it is necessary to install heating supply ducts in outside walls or in unheated spaces, the duct must be effectively insulated against exposure with insulation having a conductivity value (k) of not more than 0.40 (See SBC 7502).

~~(3)~~ 3. Where return air is taken from first floor through a register box placed between studs, the stud space containing such box shall be effectively sealed to prevent air from stud space above being drawn into the system.

~~(4)~~ 4. Where return air from upper floors is conducted to the basement through stud spaces any thermal insulation of a flexible type installed in such stud spaces shall be so installed and secured in position as to prevent its encroachment on the open area of said stud spaces due to swelling, buckling, or sagging.

~~(5)~~ 5. Where the space between joists is used for the purposes of conveyance of return air to the furnace, such joist spaces shall be covered on the bottom of the joists with metal not less than 32 gauge, nailed, or stapled 3 inches on center. A vapor resistant material shall be used for sealing the top of the joist spaces except when sheet plywood is used for sub-flooring.

~~(6)~~ 6. Return air ducts passing through attached private garages shall be sealed against fumes.

~~(7)~~ 7. Exposed warm air ducts passing through attached private garages whether heated or not, shall be insulated with incombustible insulation having a conductivity value (k) of 0.40. (See SBC 7502)

~~(8)~~ 8. Elbows shall be provided with splitters or diffuser vanes where necessary to maintain uniform velocities throughout duct area and reduce turbulence and impact losses. Transformation fittings shall be made with gradual slope. Fan discharge connections shall have a maximum slope of one inch in 7 inches. Where a pipe or other obstruction passes through a duct, a streamlined sleeve of sheet metal shall be installed around such obstruction and shall be soldered to duct at ends to make it air tight. The area of the duct, at point of such obstruction, shall be increased by an amount equal to the streamlined sleeve.

SBC 7725 Numbering has been editorially changed.

SBC 7725 Ductwork For Other Than Residential Application

~~(1)~~ 1. Design. All ducts shall be designed to promote the unrestricted flow of air with long sweep or turning vanes.

~~(2)~~ 2. Air Velocities. For the purpose of calculation and design, the air velocities shall not in general exceed the maximum velocities as recommended in Table 4- 77-D.

~~(3)~~ 3. Construction and Installation.

~~(a)~~ A. The recommended gauges and construction for rectangular sheet metal ducts and for round and flat oval ducts shall be in accordance to the values recommended in Tables ~~5,6,7 and 8~~ 77-E,F,G and H hereafter. Materials other than sheet metal see SBC 7724 1-B.

~~(b)~~ B. Ducts shall be securely supported by hangers, straps, lugs, or brackets. The ducts shall not be used for the support of any other materials or equipment.

~~(c)~~ C. No nails shall be driven through the duct walls and no unnecessary holes shall be cut in them.

SBC 7726 Numbering has been editorially changed.

SBC 7726 Underground Duct Construction and Installation

~~(1)~~ 1. General Classification. There are two general types of materials which can be used. One type must be completely encased in concrete, and the other need not be completely encased in concrete. Duct materials are classified and described below. The type numbers are arbitrarily chosen and do not indicate in any way the degree of acceptability of the various types.

~~(2)~~ 2. No underground duct shall be installed where water conditions may occur unless means are provided to collect and drain surface and underground water by the installation of drain tile around the perimeter of the space served by the underground duct system.

~~(3)~~ 3. The top of the drain tile shall be at an elevation lower than the bottom of the underground duct.

~~(4)~~ 4. Types of Ducts.

~~(a)~~ A. Type 1 - Material. Ducts constructed of Type 1 material are described as follows:

1. Ducts which will float when concrete is being poured.

2. Material which is subject to corrosion by concrete.

3. Material which is non-combustible. An example of this material is galvanized sheet metal. See Figure 77- 4- 8.

4. Ducts of this type must be:
   (a) Encased in not less than 2 inches of concrete and with a minimum of 2 1/2 inches of concrete above the duct;

   (b) Equivalent in strength and durability to 26-gauge, galvanized-steel round duct of 8-inch diameter.

~~(b)~~ B. Type 2 - Material. Ducts constructed of Type 2 materials are described as follows:

1. Ducts which will float when concrete is being poured.

2. Ducts constructed of material which is not subject to corrosion by concrete.

3. Ducts constructed of material which is non-combustible. An example of this material would be stainless steel. See Figure 77-5 9. Ducts of this type must provide a minimum of 2 1/2 inches of contrete above the duct.

4. Be equivalent in strength of 26-gauge, galvanized steel, round duct of 8 inch diameter.

~~(c)~~ C. Type 3 - Material. Ducts constructed of Type 3 material are described as follows:

1. Ducts which will float when concrete is being poured.

2. Material which is subject to moisture transmission

3. Material which is combustible. An example is laminated paper or other organic fiber. See Figure 77-5 9.

4. Ducts of this material must:
   (a) Satisfy the requirements set forth in federal Housing Administration, "Heating and Air Conditioning Ducts Encased and Under Concrete Slabs-or-Ground", Publication 838 of the National Academy of Sciences - National Research Council Washington, D.C. (This criterion and test procedure covers fire resistance, crushing strength, bending strength, deterioration, and odor, delamination, and hydrogenion concentration.)
   (b) ~~Not~~ MUST be encased in not less than 2 inches of concrete and with a minimum of 2 1/2inches of concrete above the duct.
   (c) Not be used within 2 feet of the furnace supply plenum nor within 2 feet of a vertical connection to a riser or register.

~~(d)~~ D. Type 4 - Material. Ducts constructed of Type 4 material are described as follows:

1. Material which is subject to moisture transmission.

2. Material which is not subject to corrosion by concrete.

3. Ducts which will not float when concrete is being poured.

4. Material which is non-combustible. Examples of this are ceramic pipe having a moisture absorption in excess of 8% and concrete pipe. See Figure 77-5 9.

5. Ducts of this material must be:
   (a) Covered with not less than 2 1/2 inches concrete above the duct.

   (b) Equivalent in strength and durability to 26-gauge galvanized steel, round duct of 8 inch diameter.

~~(e)~~ E. Type 5 - Material. Ducts constructed of Type 5 material are described as follows:

1. Material which is not subject to moisture transmission.

2. Material which is not subject to corrosion by concrete.

3. Ducts which will not float when concrete is being poured.

4. Material which is non-combustible. Examples of this are asbestos-cement pipe and ceramic pipe, but fire to a moisture absorption not to exceed 8%, and trademarked by its manufacturer for identification. See Figure 77-~~6~~ 10.

5. Ducts of this material must be:
   (a) Equivalent in strength and durability to 26-gauge galvanized-steel, round duct of 8-inch diamater.

   (b) Installed so that there is a minimum of 2 1/2 inches of concrete above the duct, but need not be completely encased in concrete. (Where bell and spigot joints are used, there must be a minimum of 2 inches of contrete above the bell.)

   (c) Figure 77-9 13 shows construction details for the above-named types of materials.

7726

~~(f)~~ F. All ducts which tend to float, Types 1,2 and 3 should be securely held in place when the slab is poured. The ducts must be brought to the proper level and pitch by placing concrete or other suitable materials under them at 8-foot intervals for support. They must be anchored to prevent floating. This can be accomplished by either one of the two following methods:

1. Placing shovelfulls of concrete at 8-inch intervals on the vapor barrier and under the ducts. Wires shall be embedded in the concrete at these intervals and then wrapped around the ducts after the concrete has hardened. See Figure 77-~~7~~ 11.

2. By making a preliminary pour of concrete around the bottom of the ducts, holding them in place with suitable weights or blocking and completing the operation after the first pour has set sufficiently to hold the ducts in place. See Figure 77-~~8~~- 12.

~~(5)~~ 5. Vapor Barrier.

~~(a)~~ A. Residential Installations.

1. A vapor barrier must be placed between the fill and the bottom of the slab as shown in Figures 77-~~4,5,6,7 and 8.~~ 8,9,10,11 and 12.

2. The barrier shall be polyethylene, 4 mil. in thickness or equal.

3. It must completely cover the area within the foundation walls and extend up the walls to the top of the foundation.

4. All joints must be lapped 4 inches to 6 inches and preferably sealed with a suitable material.

5. Whenever the vapor barrier is pierced by tie-rods, utility pipes, etc., the hole must be sealed.

~~(b)~~ B. Other Installations.

1. If duct only is encased, it should be done in accordance with ~~(a) second and fourth paragraphs above.~~ (SBC 7726~~(5)~~-2 and ~~(5)~~a-4).

7726 5A~ 5A4

2. Not required when duct material is both vapor resistant and non-corrosive.

~~(6)~~ 6. Floor Slab Insulation.

~~(a)~~ A. Insulation must be placed completely around the edge of the slab when less than 42 inches below finish grade.

~~(b)~~ B. A minimum recommendation is that the insulation material should have a conductance at 70 degree F. of not more than .40 BTU per hour per square foot per degree F. temperature difference.

~~(c)~~ C. The material shall be moisture-proof, vermin and insect proof, and resistant to deterioration.

~~(d)~~ D. If installed vertically on the inside surface of the footing wall, it should extend downward not less than 18 inches from the top of the slab. See Figures 7~~7-8-and-9~~ 12 and 13.

~~(7)~~ 7. Underground ducts shall be provided with free drainage to a lower room of the building or to a sump to provide natural drainage of the ducts. Access openings shall be provided for inspection and cleaning service at each low point of the system. All such ducts shall be constructed without a direct sewer connection.

~~(8)~~ 8. All room inlets and outlets for underground ducts shall have reasonably watertight connections where the risers are connected to underground ducts.

~~(a)~~ A. Where supply air ducts are installed parallel and adjacent to an outside wall, a moisture-proof insulating material shall be provided having a thermal conductance factor of 125 BTU per hour per square foot per degree F. and extending from bottom of floor to 2 feet below finished grade.

~~(b)~~ B. The insulation shall be a cellular block-type with the cell linkage providing a vapor seal. The material shall withstand a sustained minimum pressure of 5 pounds per square inch.

~~(9)~~ 9. Pipes carrying non-hazardous material may be installed in underground ducts, provided that the net free area is sufficient for the flow of air and the inside dimensions of the duct are greater than 4 feet wide and 4 feet high.

SBC 7728 Numbering has been editorially changed.

SBC 7728 Insulation of Ducts.

~~(1)~~ 1. Where air conditioning supply ducts are exposed in a manner which creates a temperature drop of more than 10% for heating and a temperature rise of 4% on cooling from the plenum temperature, the duct shall be insulated to meet this requirement.

~~(2)~~ 2. The temperature drop considered shall be from the plenum to the furthest register.

SBC 7729 Numbering has been editorially changed.

SBC 7729 Separate Vent Ducts

~~(1)~~ 1. Separate exhaust systems shall be provided for kitchen and bathroom exhaust. Exhaust vent ducts, serving similar occupancies, shall be continuous to a gathering chamber immediately below the point of final delivery to the outside atmosphere, such as the basin of a roof ventilator.

~~(2)~~ 2. This requirement prohibits the use of open pipe spaces as a substitute for a continuous duct.

SBC 7730 Numbering has been editorially changed.

SBC 7730 Vent Ducts, Horizontal Run

~~(1)~~ 1. Horizontal runs in vent ducts connected to siphon-type roof ventilators shall be avoided wherever possible and the maximum practicable inclination shall be provided in all cases. In no case shall the horizontal run exceed 30% of the vertical run unless the room has a direct mechanical supply or the vent duct is connected to an exhaust fan.

~~(2)~~ 2. Where the interior spaces are subject to pressure changes, an automatic back draft damper shall be provided. Hand operated dampers shall not be installed in vent ducts that are connected to a siphon-type roof ventilator.

SBC 7731 Numbering has been editorially changed.

SBC 7731 Vent Ducts Above Roof

~~(1)~~ 1. Final delivery of all vent circuits shall be protected from the weather and shall be located and constructed to prevent contamination of air supply for or in any occupied area.

~~(2)~~ 2. Gravity vent ducts shall extend not less than 2 feet above the high portion of the roof or parapet wall, and shall be surmounted with an approved type of siphon-roof ventilator.

~~(3)~~ 3. A drip pan shall be provided below all gravity vents.

SBC 7732 Numbering has been editorially changed.

SBC 7732 Relief Vents

~~(1)~~ 1. Barometric relief vents may not be used in lieu of siphon ventilators where ventilation is required by the exhaust method for occupancies classified as (3) and (4) in ~~Table 1, SBC 7705.--SBC 7705~~ Table 77-A.

~~(2)~~ 2. Barometric relief vents may be used to exhaust an air volume equal to the mechanical ventilation supplied for occupancies classified as (1) and (2) in ~~Table 1, Section SBC 7705~~ SBC 7705 Table 77-A.

~~(3)~~ 3. Where barometric relief vents are installed on the roof, the discharge opening shall not be less than 2 feet above the high portion of the roof.

SBC 7734 Numbering has been editorially changed.

SBC 7734 Outlets and Returns

~~(1)~~ 1. Number and Arrangement. The capacity, number, and arrangement of supply outlets, returns, and exhausts shall be such as to insure a reasonably uniform distribution of air throughout the areas served during all periods of occupancy.

~~(2)~~ 2. Elevator Shafts and Stairwells. Elevator shafts and stairwells shall not be used for ventilation purposes nor shall they be permitted to interfere with the effectiveness of the installation, except where there is a change in elevations and doors are not provided or are not requried to separate the stairwell or elevator shaft from other areas.

~~(3)~~ 3. Outlets and Returns for Gravity Systems. Gravity outlets and returns shall be araanged in a manner which utilizes every possible natural advantage to provide proper and effective air movement and distribution.

~~(4)~~ 4. Grilles or Diffusers Required. All air supply outlets and returns shall be equipped with grilles or devices which will provide a reasonably uniform distribution of air.

~~(5)~~ 5. Floor Registers. Shall be specifically designed for this use.

~~(6)~~ 6. Corridor Ventilation. Air from occupied areas uncontaminated by other than human occupancy may be discharged into corridors and recirculated or vented through auxiliary spaces, such as built-in lockers, toilet rooms, kitchens, or similar areas. Where the vent capacity of such auxiliary spaces is insufficient, additional direct vent flues shall be provided.

~~(a)~~ A. Where lockers installed in recessed walls are used for venting purposes, each inlet and outlet shall have a net free area of not less than 15 square inches per lineal foot of locker width.

SBC 7735 is amended by adding a new section to read as follows:

SBC 7735 Paint Spray Areas

~~(1)~~ 1. Paint spray areas shall comply with the construction, mechanical ventioation, make up air, and flammable liquid storage standards set forth in the American Standard Safety Code for the "Design, Construction, and Ventilation of Spray Finishing Operations" (Z 9.3, 1964) published by America National Standards Institute.

~~(2)~~ 2. Flammable Liquid Storage Rooms:

VENTILATION

Shall comply with the requirements of Section 43 of NFPA 30-1973.

SBC 7737 is amended by adding a new section to read as follows:

SBC 7737 Clothes Dryer Venting for Multiple Dwellings.

1. Each dryer shall be vented individually and as direct to the outside as possible.

2. When impossible to vent dryer directly to the outside wall, due to the construction of the structure, such vent shall be contained within a rated vertical shaft directly to the roof of the structure. A common duct may be installed within a rated vertical shaft, to accommodate a multiple number of dryer vents and each such laundry room must be vented separately. Such duct shall have a booster fan interlocked with each dryer in a manner that no dryer may operate unless the booster fan is in operation. Booster fan to be sized so that lint may not become a fire hazard within the duct and shall be at the exhaust end of the common duct.

3. Make-up air shall be provided in an amount equal to the rating of the combined machines.

SBC 7738 is amended by adding a new section to read as follows:

SBC 7738 Coin Operated Laundries.

1. Plenum chambers shall be constructed to meet the required fire-resistive rating for their use.

2. An unobstructed space of at least 24" at the rear of each dryer, to permit servicing and maintenance, shall be provided.

3. No combustible material shall be permitted within 18" of top and sides of dryer unless such material is one hour fire resistive construction.

ON SIDE FACING DRIVE ONLY

4. Each dryer shall be vented individually.

5. Plenum and dryers must be sealed in a manner that no air will come from the customer area.

6. Make-up air shall be ~~as~~ direct from the outside, and be sized ~~on~~ FOR A ~~the~~ velocity of between 350'/M to 500'/M. Such opening may include a barometric damper.

TABLE ~~NO.~~ 1 77-A

REVISE ALL PARAGRAPHS?

MINIMUM STANDARD OCCUPANCY CLASSIFICATION

USE OR OCCUPANCY	CLASSIFICATION	BASIS OF CAPACITY
Arenas and Field Houses	(1)	4 sq. ft. per person. Use seated area only.
Armories (drill halls)	(1)	30 sq. ft. per person.
Assembly halls	(1) or (2)	7 sq. ft. per person—See SBC 7717.
Banquet halls	(1) or (2)	15 sq. ft. per person—See SBC 7717.
Bath and shower rooms	(3)	See SBC 7713.
Barber shops	(2)	20 sq. ft. per person—See SBC 7717.
Beauty parlors	(2)	20 sq. ft. per person—See SBC 7717.
Billiard rooms	(1) or (2)	15 sq. ft. per person—See SBC 7717.
Bowling alleys	(1) or (2)	Seating capacity plus 6 persons per alley. Terminate occupied area at foul line. See SBC 7717.
Brokerage boardrooms	(1) or (2)	7 sq. ft. per person—See SBC 7717.
Cafeterias	(1) or (2)	15 sq. ft. per person—See SBC 7717.
(Churches and other places of worship	(2)	Dining room: 15 sq. ft. per person. See SBC 7708.
Sunday School rooms)	(2)	15 sq. ft. per person—See SBC 7708.
Club rooms	(1) or (2)	7½ CFM per person.
Dance halls	(1) or (2)	15 sq. ft. per person—See SBC 7717.
Dining rooms	(1) or (2)	15 sq. ft. per person—See SBC 7717.
Dry cleaners	(3)	4 CFM per sq. ft.
Embalming rooms, autopsy rooms, and morgues	(4)	3 CFM per sq. ft. (exhaust)
First aid rest rooms	(1) or (2)	15 sq. ft. per person—See SBC 7717.
Funeral homes	(2)	See SBC 7718.
Garages and service stations	(4)	See SBC 7718.
General offices	(1) or (2)	See SBC 7716.
(Gymnasiums and combined gymnasiums and assembly halls)	(1)	6 sq. ft. per person for seated space; 15 sq. ft. per person for space not seated.
Hospitals	(1) or (2)	See SBC 7720.
Nursing Homes	(1) or (2)	See SBC 7720.
Janitor closets	(3)	See SBC 7713 and SBC 7720.

TABLE ~~NO.--1~~ 77-A

USE OR OCCUPANCY	CLASSIFICATION	BASIS OF CAPACITY
Kitchens	(3)	See SBC 7714.
Laboratories	(1) or (3)	25 sq. ft. per person.
Laundries	(3)	15 CFM per person or 1½ air changes per hour, whichever is greater.
Lecture halls	(1)	7 sq. ft. per person Use seated areas only.
Library reading rooms	(1)	20 sq. ft. per person.
Locker rooms	(3) or (4)	See SBC 7712.
Lodge halls	(1) or (2)	6 sq. ft. per person for seated areas; 15 sq. ft. per person for space not seated. See SBC 7717.
Mental hospitals	(1) or (2)	See SBC 7719.
Motion picture booth	(1) or (3)	See SBC 7709.
Penal institutions	(1) or (2)	See SBC 7719.
Playroom unfinished area	(3)	23 sq. ft. per person.
Restaurants	(1) or (2)	15 sq. ft. per person—See SBC 7717.
Retail establishments	(1) or (2)	Basement: 40 sq. ft. per person. Other floor: 60 sq. ft. per person. See SBC 7717.
School all-purpose, dining and recreation rooms	(1)	15 sq. ft. per person.
School auditorium	(1)	7 sq. ft. per person.
School classroom	(1)	23 sq. ft. per person.
School kindergarten rooms	(1)	23 sq. ft. per person.
School lecture rooms	(1)	7 sq. ft. per person. Use seated area only.
School project rooms	(1)	23 sq. ft. per person.
School study rooms	(1)	16 sq. ft. per person.
Security vault (occupied)	(4)	2 CFM per sq. ft.
Skating rinks	(1) or (2)	15 sq. ft. per person. See SBC 7717.
Swimming pools	(3)	See SBC 7713.
Taverns	(1) or (2)	20 sq. ft. per person—See SBC 7717.
Theaters	(1)	7 sq. ft. per person.
Theater lobbies	(1)	15 sq. ft. per person.
Theater lounge rooms	(1)	15 sq. ft. per person.
Toilet rooms	(3)	See SBC 7713.
Vocational instruction and research	(1) or (3)	40 sq. ft. per person.
Wardrobes, locker, and cloak rooms	(3)	See SBC 7712.

NOTE: Air which has been exhausted and reconditioned by air conditioning equipment which simultaneously controls the temperature, humidity, and cleanliness of the air may be recirculated as equivalent fresh air, except where drawn from a toilet room, kitchen, operating room, mortuary, or room or space where hazardous dust, fumes or gases, or objectionable odors are present. The air recirculated must be supplemented by at least 10% fresh air.

TABLE 77-B

TAILPIPE EXHAUST REQUIREMENTS

TYPE OF ENGINE	HORSEPOWER	CFM PER TAILPIPE	DIAMETER OF FLEX DUCT
GASOLINE	200 and under	100	3 inches
GASOLINE	Over 200	200	4 inches
DIESEL	---	400	4½ inches

TABLE NO.-3 77-C

METAL THICKNESS OF SHEET METAL DUCTWORK USED FOR RESIDENTIAL PURPOSES

Diameter or Width (inches)	Minimum Thickness Galvanized Iron (U.S. Gauge)	Minimum Thickness Aluminum (B and S Gauge)
	Round Ducts	
Less than 14	30	26
14 or more	28	24
	Rectangular Ducts Enclosed in Partitions	
14 or less	30	26
Over 14	28	24
	Rectangular Ducts Not Enclosed	
14 or less	28	24
Over 14	26	24

TABLE NO.-4 77-D

RECOMMENDED AND MAXIMUM DUCT VELOCITIES FOR LOW PRESSURE SYSTEMS

DESIGNATION	VELOCITIES, Fpm					
	Residences		Schools, Theaters, Public Buildings		Industrial Buildings	
	Rec.	Max.	Rec.	Max.	Rec.	Max.
Outdoor Air Intakes*	500	800	500	900	500	1200
Fitlers	250	300	300	350	350	350
Heating Coils	450	500	500	600	600	700
Air Washers	500	500	500	500	500	500
Fan Outlets	1000-1600	1700	1300-2000	1500-2200	1600-2400	1700-2800
Main Ducts	700-900	800-1200	1000-1300	1100-1600	1200-1800	1300-2200
Branch Ducts	600	700-1000	600-900	800-1300	800-1000	1000-1800
Branch Risers	500	650-800	600-700	800-1200	800	1000-1600

*Free Agent.

TABLE NO. 5-E RECOMMENDED CONSTRUCTION FOR RECTANGULAR LOW PRESSURE[a] DUCTS

Dimension of Longest Side, Inches	Sheet Metal Gage (All Four Sides)[a]			Transverse Reinforcing[a]							
				Between Joints[d]	At Joints[e]						
					Flat S Slip / Drive Slip	Standing S Slip		Standing Seam Joint / Pocket Lock / Alternate Standing S Slip			
	Steel	Aluminum Alloy[b]	Copper	Minimum Reinforcing Angle Size and Maximum Longitudinal Spacing	Min. Gage	Min. Gage	Min. Angle Size	Min. Gage for Pocket Lock or Standing S Slip	Min. Angle Size	Min. Height, Inches
	Gage	Thickness, In.	Oz. Per Sq. Ft.							
Up thru 12	26	0.020	16	None Required	26	24	None Required	24	None Required	1
13-18	24	0.025	24	None Required	24	24	None Required	24	None Required	1
19-30	24	0.025	24	1 × 1 × ⅛ @ 60 in.	—	24	None Required	24	None Required	1
31-42	22	0.032	32	1 × 1 × ⅛ @60 in.	—	22	None Required	22	None Required	1
43-48	22	0.032	32	1½ × 1½f × ⅛ @60 in.	—	22	1½ × 1½ × ⅛	22	None Required	1½
49-54	22	0.032	32	1½ × 1½ × ⅛ @ 48 in.	—	22	1½ × 1½ × ⅛	22	None Required	1½
55-60	20	0.040	36	1½ × 1½ x ¼ @48 in.	—	22	1½ × 1½ × ⅛	22	None Required	1½
61-84	20	0.040	36	1½ × 1½ × ⅛ @ 24 in.	—	22	1½ × 1½ × ¼	22	1½ × 1½ × ⅛	1½
85-96	18	0.050	48	1½ × 1½ × 3/16 @ 24 in.	—	22	1½ × 1½ × 3/16	22	1½ × 1½ × 3/16	1½
97-120	18	0.050	48	2 × 2 × ¼ @24 in.	—	22	2 × 2 × ¼	22	2 × 2 × ¼	1½
121 and Over	18	0.050	48	2 × 2 × ¼ @24 in. with tie rods @120 in. along angle	—	—		22	2 × 2 × ¼ with tie rods @120 in. along joint	1½

[a]Flat areas of duct over 18 in. wide shall be stiffened by crossbreaking unless duct will have non-conductive covering or sound absorbing lining.
[b]Suitable aluminum alloys are: Commercial Designation 3003 Temper H14 and Duct Sheet.
[c]Transverse reinforcing size is determined by dimension of side to which angle is applied. Angle sizes are based on mild steel. Reinforcing made in other shapes or of other materials must be of equivalent strength and rigidity.
[d]There is no restriction on the length of duct sections between joints. Ducts are normally made in sections of 4, 8, 10 or 12 ft. in length. The longitudinal spacing of the transverse reinforcing between joints may necessarily be less than the spacing recommended in the table in order to conform to the selected length module.
[e]Other joint types of equivalent strength, rigidity and air tightness may be used.
[f]For aluminum or copper ducts 43 in. through 48 in. maximum dimensions, the maximum longitudinal spacing of transverse reinforcing is 48 in.
[g]Low pressure considered to be 2 in. water static pressure or less.

TABLE NO. 6-77-F RECOMMENDED CONSTRUCTION FOR ROUND DUCTS

Duct Diameter, Inches	Steel—Galv. Sheet Gage				Girth Reinforcing	Girth Joints[a]	
	Low Pressure[b] Ducts and Fittings	Medium and High Pressure Ducts[c]				(Continuously Welded or as Below)	
		Spiral Lock Seam Duct	Longitudinal Seam Duct	Welded Fittings*	Minimum Reinforcing Angle Size and Maximum Longitudinal Spacing	Low Pressure Ducts	Medium and High Pressure Ducts
Up thru 8	26	26	24	22	None required	Crimped and beaded joint	2 in. long slip joint
9-13	26	24	22	20	None required	Crimped and beaded joint	4 in. long slip joint
14-22	24	24	22	20	None required	Crimped and beaded joint	4 in. long slip joint
23-36	→	22	20	20	None required	—	4 in. long slip joint
37-50	→	20	20	18	1¼ × 1¼ × ⅛ @72 in.	—	1¼ × 1¼ × ⅛ angle flanged joint
51-60	→	—	18	18	1¼ × 1¼ × ⅛ @72 in.	—	1¼ × 1¼ × ⅛ angle flanged joint
61-84	→	—	16	16	1½ × 1½ × ⅛ @48 in.	—	1½ × 1½ × ⅛ angle flanged joint

*Flanged joints may be considered as girth reinforcing. → use next recommended construction.
[b]Low pressure considered to be 2 in. water static pressure or less.
[c]Medium and high pressure considered to be from 2 to 10 in. water static pressure.

TABLE NO.-7 97-G -RECOMMENDED CONSTRUCTION FOR RECTANGULAR MEDIUM PRESSURE[a] DUCTS

Dimension of Longest Side, Inches	Galv. Sheet Gage (All Four Sides)	Transverse Reinforcing: Between Joints[b] — Minimum Reinforcing Angle Size and Maximum Longitudinal Spacing: With Tie Rods	Between Joints[b]: Without Tie Rods	At Joints: Inside Slip Joint / Double S Slip / Welded Flange — Min. Angle Size	Welded Flange — Min. Height, In.	Standing Seam — Min. Height, In.	Reinforced Standing Seam — Min. Height, In.	Reinforced Standing Seam — Min. Angle Size	Flanged Joint — Min. Height, In.	Pocket Lock — Min. Height, In.	Companion Angle Flanged Joint — Min. Angle Size
Up thru 12	24	No tie rods required	No angle required	None required	M	1	1	None Req'd.	1	1	1½×1½×⅛
13–18	24	1 tie rod @ 48 in. intervals on Center-line of duct side	1×1×16 Gage @ 48 in.	1×1×16 Gage	M	1	1	None Req'd.	1	1	1½×1½×⅛
19–24	22	1 tie rod @ 48 in. intervals on center-line of duct side	1×1×⅛ @ 48 in.	1×1×⅛	1M	1⅛	1⅛	None Req'd.	1¼	1⅛	1½×1½×⅛
25–36	22	→	1×1×⅛ @ 32 in. or 1¼×1¼×⅛ @ 40 in.	1¼×1¼×⅛	1⅛ with tie rod in center	1½	1½	None Req'd.	1½	1½	1¼×1½×⅛
37–48	22	→	1½×1½×⅛ @ 30 in.	1½×1½×⅛	1½ with tie rod in center	2OR1¼ with tie rod in center	1½	1½×1¼×⅛	2	—	1½×1½×⅛
49–60	20	1½×1½×⅛ @ 24 in. with tie rod in center	2×2×¼ @ 24 in.	2×2×⅛ OR 1½×1½×⅛ with tie rod in center	1⅜ with tie rod in center	1½ with tie rod in center	1½	2×2½	1½ with tie rod in center	—	1½×1½×⅛
61–72	20	1½×1½×⅛ @ 24 in. with tie rod in center	2½×2½×⅜ @ 24 in.	2½×2½×⅜ OR 1½×1¼×¼ with tie rod in center	1M with 2 tie rods	2 with tie rod in center	1½	2½×2½×⅜	1½ with tie rod in center	—	2×2×⅛ OR 1¼×1¼×⅛ with tie rod in center
73–84	18	1½×1½×¼ @ 24 in. with tie rod in center	2½×2½×⅜ @ 24 in.	2½×2½×⅜ OR 1½×1½×⅛ with tie rod in center	1M with 2 tie rods	2 with tie rod in center	1½	2½×2½×M	1½ with tie	—	2×2×⅜ OR 1¼×1¼×⅛ with tie rod in center
85–96	18	1½×1½×¼ @ 24 in. with tie rod in center	←	1½×1½×⅛ with tie rod in center	1M with 2 tie rods	2 with tie rod in center	←		1½ with tie rod in center	—	2×2×⅜ OR 1½×1¼×⅛ tie rod in in center
97 and Over	18	2×2×⅛ @ 24 in. with tie rods @48 in. along angle	←	2×2×⅛ with tie rods @ 48 in. along angle	1M with tie rods @32 in. along joint	2 with tie rods @ 48 in. along joint	←		2 with tie rods @48 in. along joint	—	1¼×1¼×⅛ with tie rods @ 48 in. along angle

→ Use next recommended construction.

[a]Transverse reinforcing must be applied on all four sides and tied together at each corner by riveting, bolting or welding. Transverse reinforcing size is determined by dimension of side to which angle is applied. Angle sizes are based on mild steel. Reinforcing made in other shapes or of other materials must be of equivalent strength and rigidity.

[b]There is no restriction on the length of duct sections between joints. Ducts are normally made in sections of 4, 8, 10, or 12 ft. in length. The longitudinal spacing of the transverse reinforcing between joints may necessarily be less than the spacing recommended in the table in order to conform to the selected length module.

[c]Medium pressure considered to be 2 to 6 in. water static pressure.

TABLE NO.-8 77-H RECOMMENDED CONSTRUCTION FOR RECTANGULAR HIGH PRESSURE DUCTS[a]

Dimension of Longest Side, Inches	Galv. Sheet Gage (All Four Sides)	Transverse Reinforcing[a]								
		Between Joints[b]		At Joints						
		Minimum Reinforcing Angle Size and Maximum Longitudinal Spacing		Inside Slip Joint Double S Slip Welded Flange	Welded Flange	Standing Seam	Reinforced Standing Seam		Flanged Joint	Companion Angle Flanged Joint
		With Tie Rods	Without Tie Rods	Min. Angle Size	Min. Height, In.	Min. Height, In.	Min. Height, In.	Min. Angle Size	Min. Height, In.	Min. Angle Size
Up thru 12	22	No tie rods required	No angle required	None required	M	1	1	None Required	1	1¼×1¼×⅛
13–18	22	1 tie rod @40 in. intervals on center-line of duct side	1×1×16 Gage @ 48 in.	1×1×16 Gage	M	1	1	None Required	1	1¼×1¼×⅛
19–24	22	2 tie rods @ 40 in.	1×1×⅛ @48 in.	1×1×⅛	1M	1¼	1¼	None Required	1M	1¼×1¼×⅛
25–36	22	→	1¼×1¼×¼ @ 32 in. OR 1½×1½×⅛ @ 40 in.	1½×1½×¼	1⅛ with tie rod in center	2 OR 1½ with tie rod in center	1½	1½×1½×⅛	2	1M×1M×M
37–48	22	→	2×2×¼ @ 30 in.	2×2×⅛ OR 1½×1½×⅛ with tie rod in center	1¾ with tie rod in center	1½ with tie rod in center	1½	2×2×M	1½ with tie rod in center	1½×1M×M
49–60	20	1¼×1½×¼ @ 24 in. with tie rod center	2×2×⅜ @24 in.	2×2×⅜ OR 1½×1½×⅛ with tie rod in center	1¼ with 2 tie rods	1½ with tie rod in center	1½	2×2×¼	1½ with tie rod in center	2×2×⅛ OR 1½×1½×⅛ with tie rod in center
61–72	20	1½×1½×⅛ @ 24 in. with tie rod in center	2½×2½×⅜ @ 24 in.	2½×2½×⅜ OR 1¼×1¼×⅛ with tie rod in center	1¾ with tie rods	2 with tie rod in center	1½	2¼×2¼×M	1¼ with tie rod in center	2×2×⅜ OR 1¼×1¼×¼ with tie rod in center
73–84	18	1½×1½×¼ @ 2⅛ in. with tie rod in center	←	1½×1½×⅛ with tie rod in center	1¾ with 2 tie rods	2 with tie rod in center	←		2 with tie rod in center	1¼×1¼×¾ with tie rod in center
85–96	18	1½×1½×¼ @ 24 in. with tie rod in center	←	1½×1½×¼ with tie rod in center	1¾ with 2 tie rods	2 with tie rod in center	←		2 with tie rod in center	1¼×1¼×¼ with tie rod in center
97 & Over	16	2×2×⅛ @ 24 in. with tie rods @ 48 in. along angle	←	2×2×⅛ with tie rods @ 48 in. along angle	1¾ with tie rods @ 32 in. along joint	2 with tie rods @ 48 in. along joint	←		2 with tie rods @ 48 in. along joint	1½×1½×¾ with tie rods @ 48 in. along angle

[a]Transverse reinforcing must be applied on all four sides and tied together at each corner be riveting, bolting or welding. Transverse reinforcing size is determined by dimension of side to which angle is applied. Angle sizes are based on mild steel. Reinforcing made in other shapes or of other materials must be of equivalent strength and rigidity.

[b]There is no restriction on the length of duct sections between joints. Ducts are normally made in sections of 4, 8, 10, or 12 ft. in length. The longitudinal spacing of the transverse reinforcing between joints may necessarily be less than the spacings recommended in the table in order to conform to the selected length module.

[c]High pressure considered to be 6 to 10 in. water static pressure.

→ Use next recommended construction.

SBC 7714 Delete Figures 1-3 in its entirety and insert the following in lieu therof:

Figure 77-1

"HOOD AGAINST WALL"

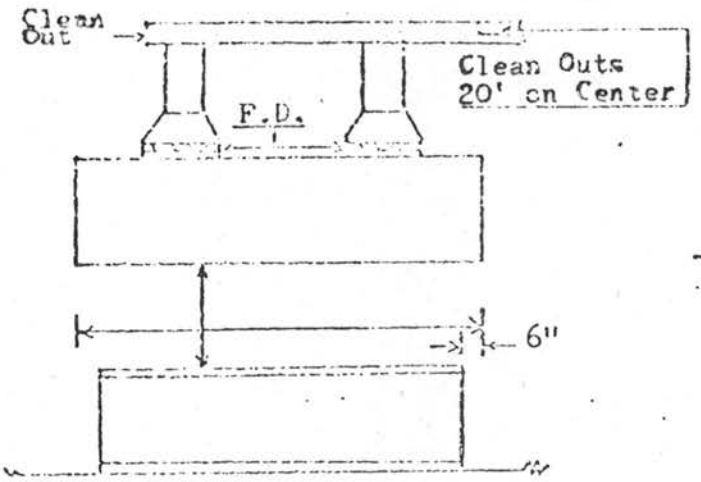

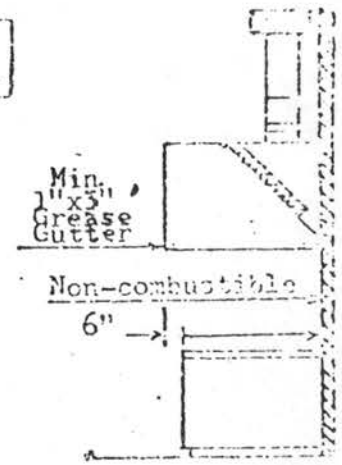

OPENED TYPE

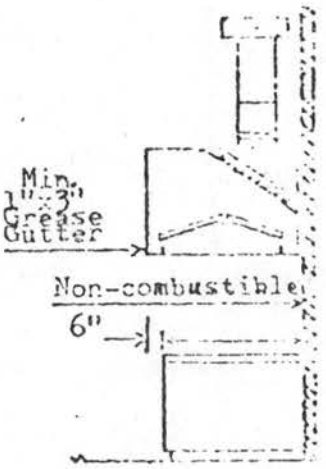

SLOT TYPE

Duct Velocity=1500-2200 F.P.M.

Grease Filters=See Requirements for Filters

Fire Dampers=Required in Each Branch Duct Unless Fixed Pipe Extinguishing System is Installed.

Q=100 CFM/square feet of entire hood opening

Q=250 CFM/square feet of slot opening

Q=MINIMUM CFM QUANTITIES

Figure 77-2

"ISLAND TYPE HOOD"

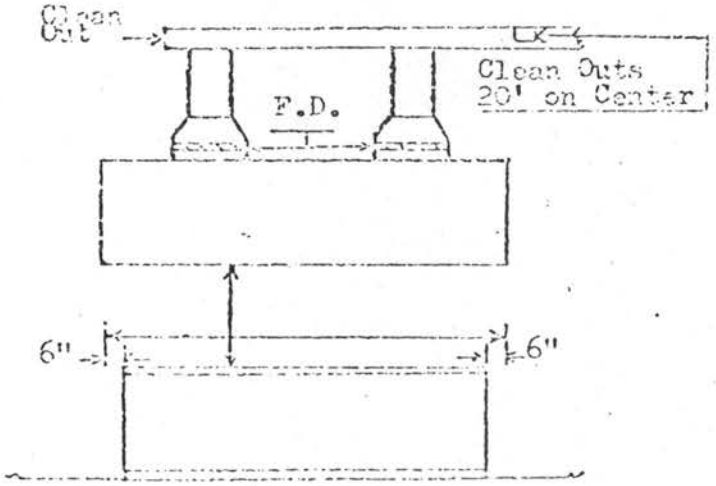

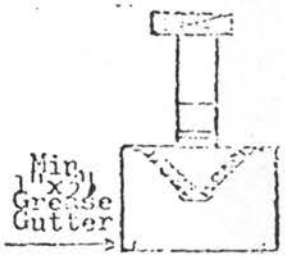

OPENED TYPE

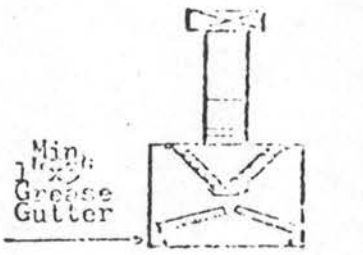

SLOT TYPE

Duct Velocity=1500-2200 F.P.M.

Grease Filters=See Requirements for Filters

Fire Dampers=Required in Each Branch Duct Unless Fixed Pipe Extinguishing System is Installed

Q=100 CFM/square feet of entire hood opening

Q=250 CFM/square feet of slot opening

Q=MINIMUM CFM QUANTITIES

Figure 77-3

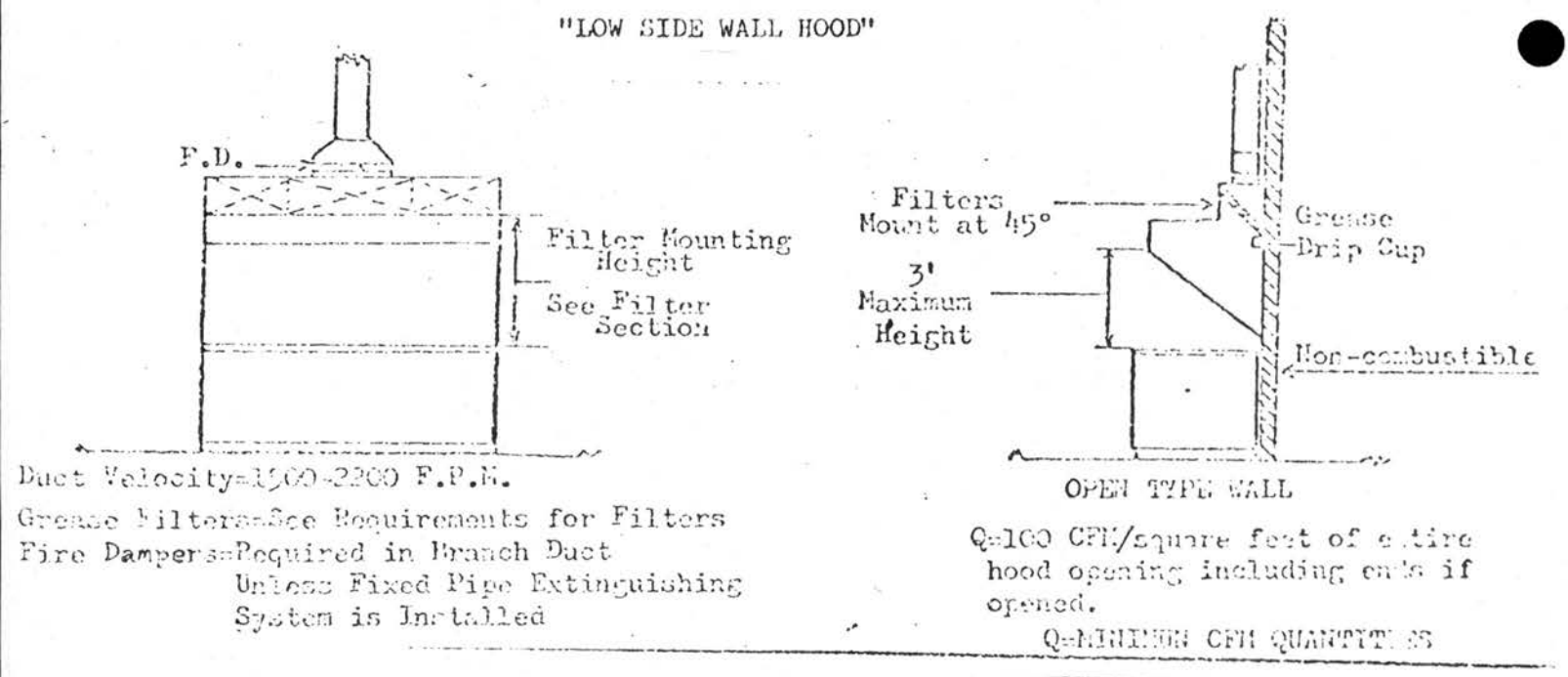

Figures 77-4 through 13 are amended by adding new figures to read as follows:

Figure 77-4

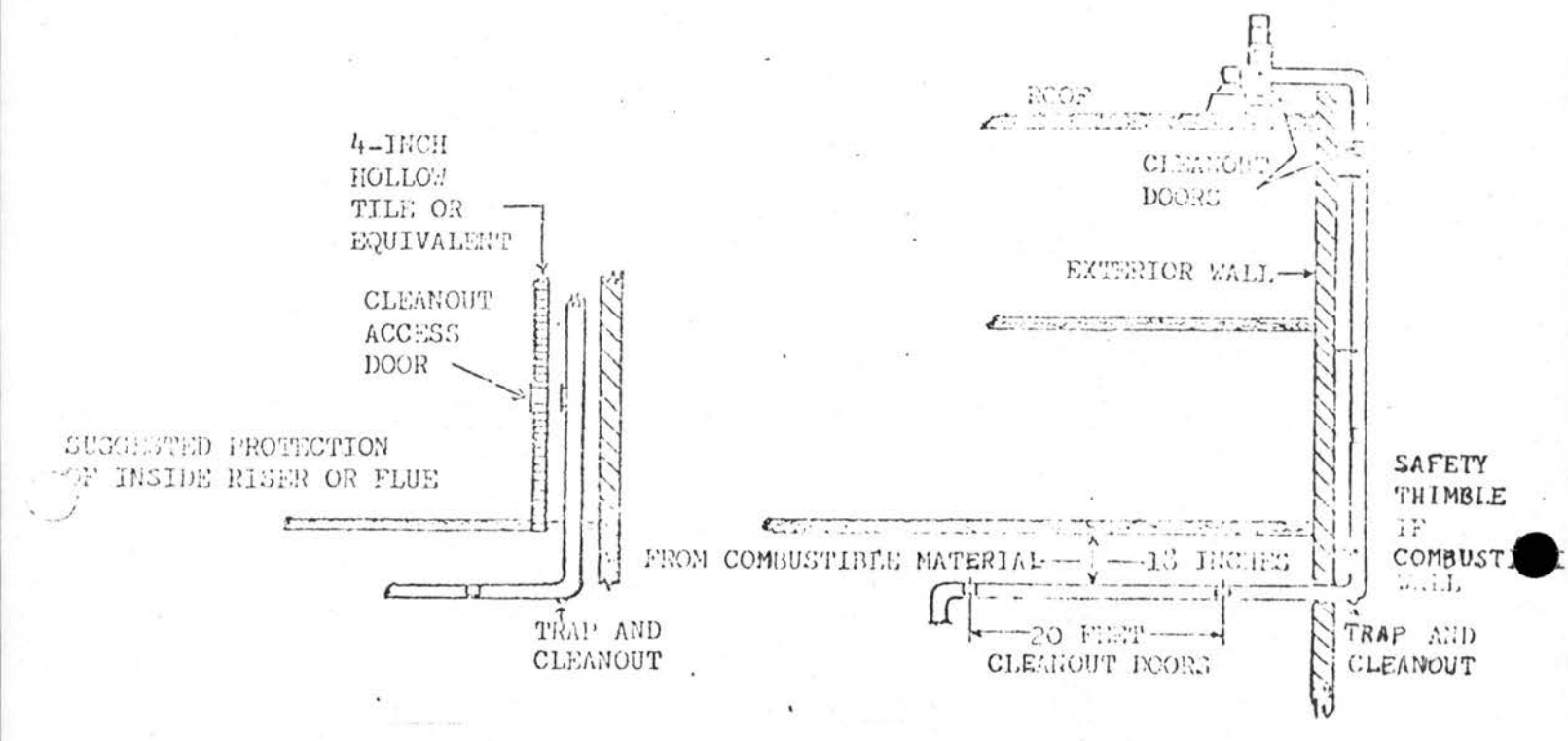

Figure 77-5

"SAFETY THIMBLE FOR COMBUSTIBLE PARTITION WALL"

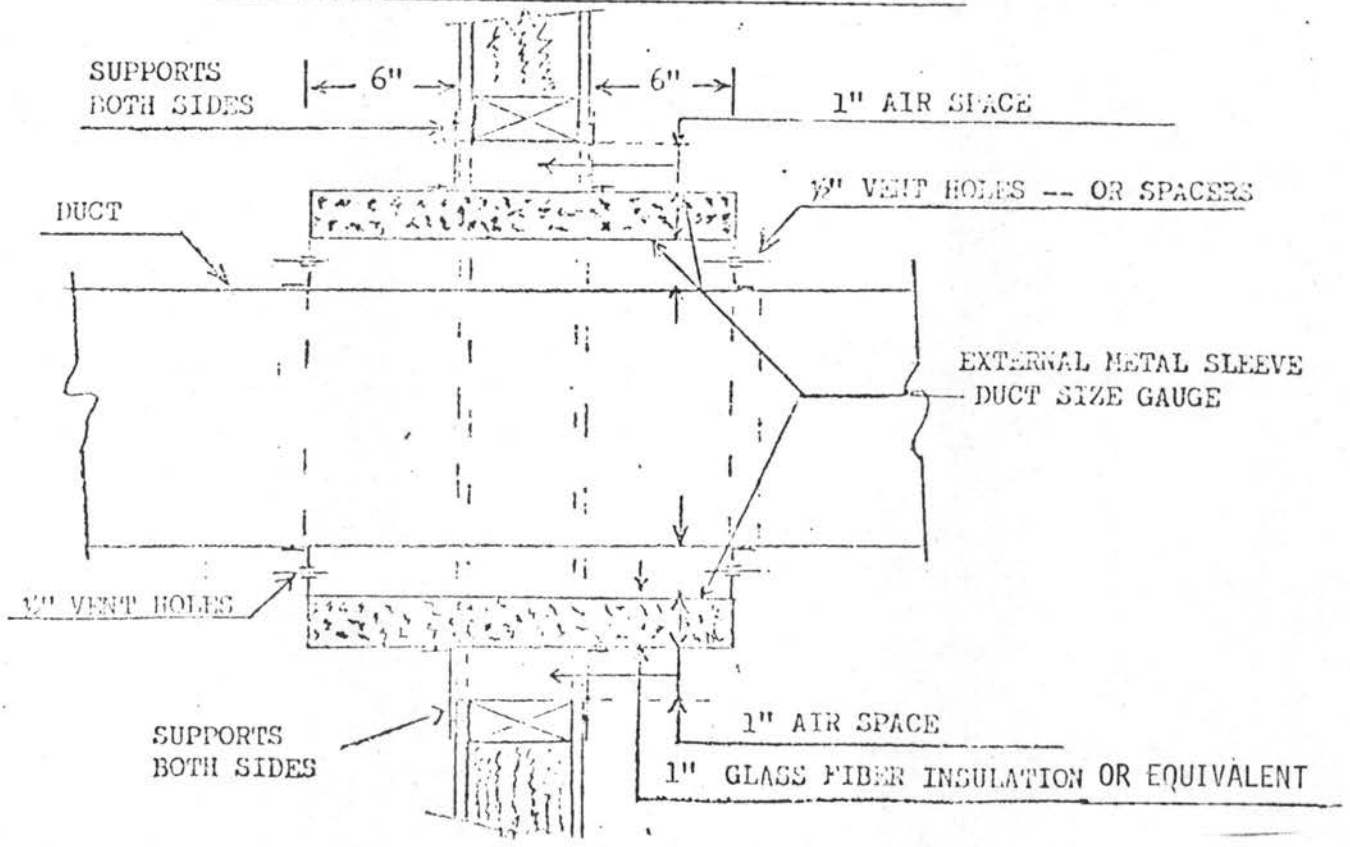

Figure 77-6

"SAFETY THIMBLE FOR COMBUSTIBLE ROOF & CEILING"

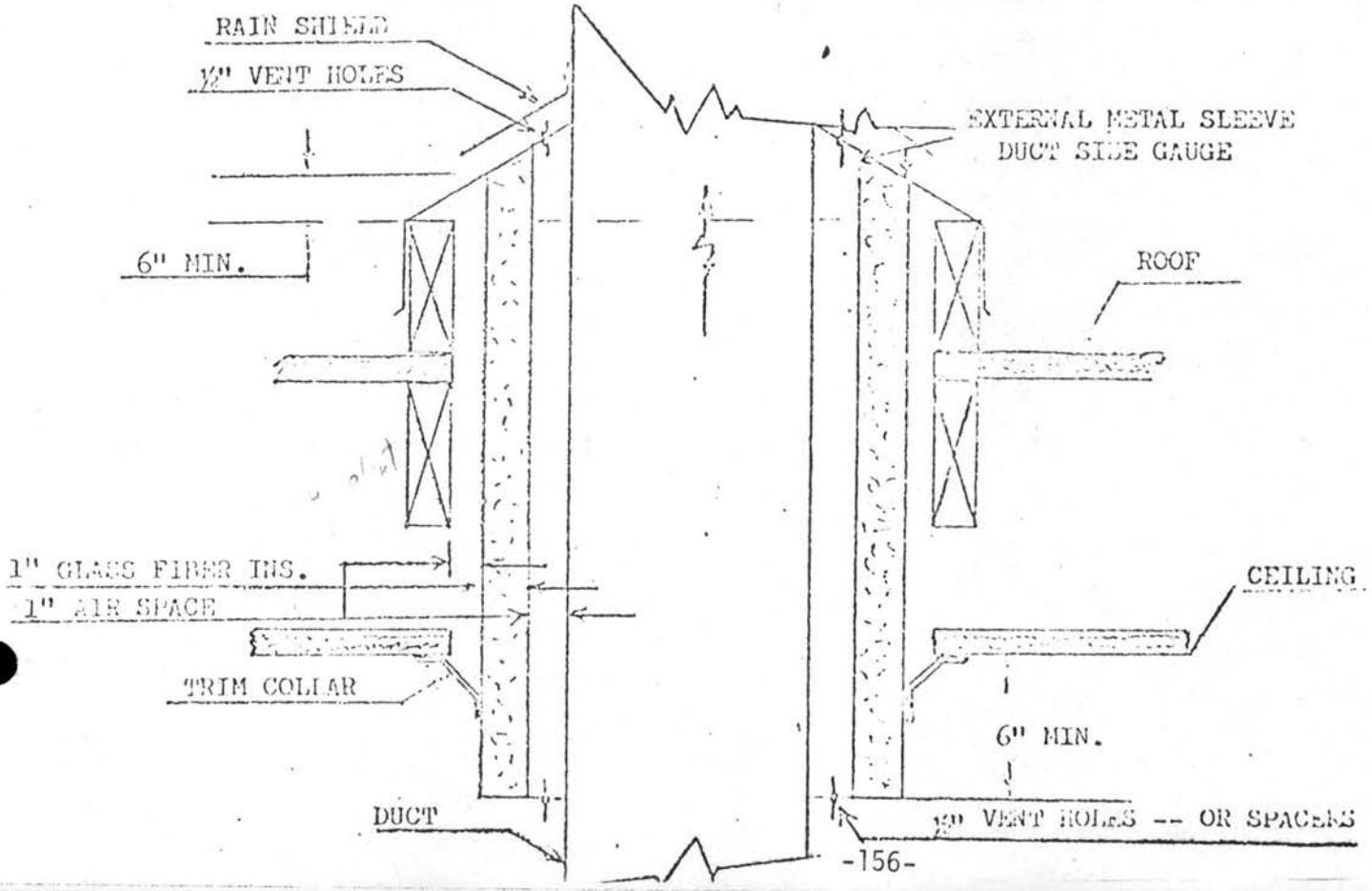

Figure 77-7

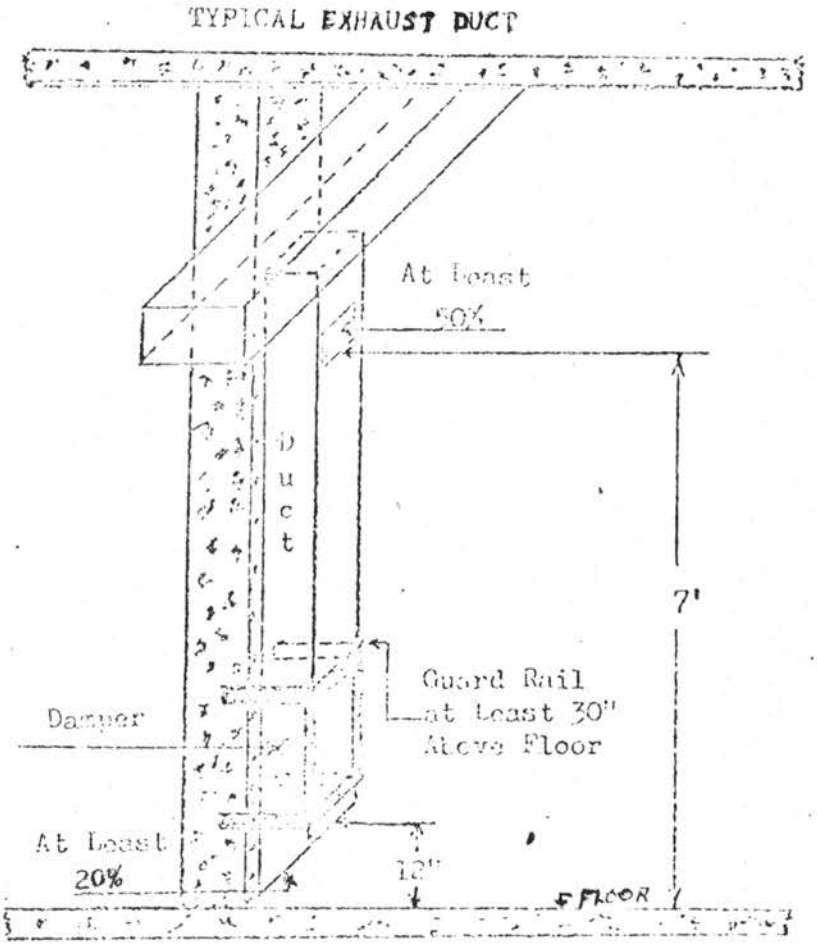
TYPICAL EXHAUST DUCT
At Least
50%
Duct
7'
Guard Rail
at Least 30"
Above Floor
Damper
At Least
20%
12"
FLOOR

Figures 4 - 9 Numbering has been editorially changed.

UNDERGROUND DUCT CONSTRUCTION

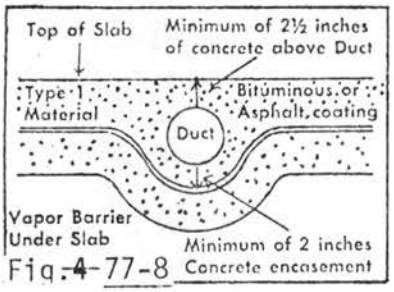

Fig. ~~4~~ 77-8

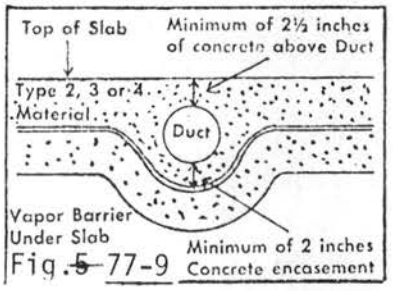

Fig. ~~5~~ 77-9

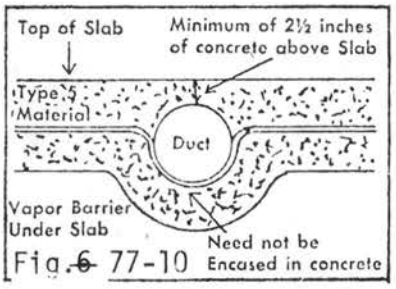

Fig. ~~6~~ 77-10

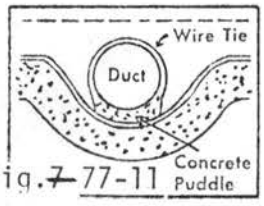

Fig. ~~7~~ 77-11

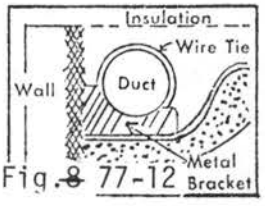

Fig. ~~8~~ 77-12

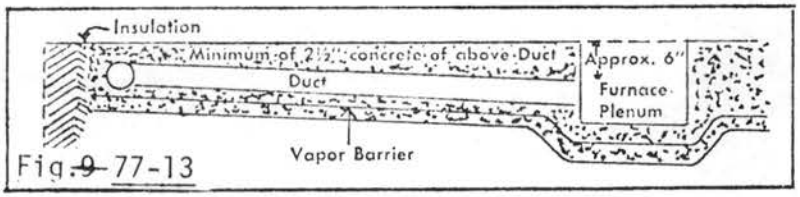

Fig. ~~9~~ 77-13

SBC 7801, 7802, 7803, 7804, 7805, 7806, 7807, 7808, 7809, 7810, 7811, 7812, 7813, 7814, 7815 and 7816 are deleted in their entirety and the following is adopted in lieu thereof:

NOTE: Underlining and strikeouts in this section show changes to present Refrigeration Code.

SBC 7801 Refrigeration. General Requirements. The application of this Chapter of the Minnesota Heating, Ventilating, Air Conditioning and Regrigeration Code is intended to provide for the safe design, construction, installation, operation, and inspection of every refrigerating system employing a fluid which is vaporized and is normally liquified in its refrigeration cycle when employed under the occupancy classifications in SBC 7809.

SBC 7802 Limitations. The provisions of this Code are not intended to apply to the use of water or air as a refrigerant, nor to gas bulk storage tanks that are not permanently connected to a refrigeration system, nor to refrigerating systems installed on railroad cars, motor vehicles, motor drawn vehicles or on shipboard, nor shall apply to:

1. A domestic installation, alteration, maintenance and repair of a refrigerator or freezer having a cabinet volume of 25 cubic feet or less.

2. One or two family dwellings served by one condensing unit where the combined gross cubic foot volume of both cabinets is 40 cubic feet or less.

3. Any unit system, one-half horsepower or less.

4. A domestic installation, alteration, maintenance, and repair of a single plug-in type air or room conditioner.

SBC 7803 Purpose. This Code is intended to establish reasonable safeguards to life, limb, health, and property; to define certain practices which are inconsistent with safety; and to prescribe standards of safety which will properly influence future progress and developments in refrigerating systems.

SBC 7804 Application. This Code shall apply to refrigerating systems installed subsequent to its adoption and to parts replaced or added to systems installed prior to or subsequent to its adoption. In cases of practical difficulty or unnecessary hardship, the authority having jurisdiction may grant exceptions from the literal requirements of this Code or permit the use of other devices or methods, but only when it is clearly evident that equivalent protection is thereby secured.

Equipment listed by an approved nationally recognized testing laboratory is deemed to meet the design, manufacture, and factory test requirements of this Code or equivalent, for the refrigerant or refrigerants for which such equipment is designed. Listed refrigerating systems are not required to be field tested to comply with this Code.

SBC 7805 Location of Outdoor Equipment

1. All system components shall be placed in accordance with local zoning ordinances.

2. Other provisions of the Building Code can affect the placement of equipment.

SBC 7806 Insulation.

1. All suction lines shall be insulated except where waived by the Administrative Authority.

2. Condensate lines shall be insulated where the omission of such insulation would create a nuisance.

3. Insulation, where required, shall be installed according to manufacturer's directions, of an appropriate type and thickness.

SBC 7807 Underground and Inaccessible Installations. Threaded joints shall not be used, except in accessible conduits, when refrigeration pipe or tubing is installed in permanent slabs, floors, or walls where the removal of the pipe or tube would require removal of permanent construction.

SBC 7808 Definitions. For the purpose of this Chapter, the following definitions shall apply:

ABSORBER (ADSORBER) is that part of the low side of an absorption system used for absorbing (adsorbing) vapor refrigerant.

ABSORPTION SYSTEM is a refrigerating system in which the gas evolved in the evaporator is taken up by an absorber or adsorber.

AIR BREAK (DRAINAGE SYSTEM). A piping arrangement in which a fixture, appliance, or device is protected from backflow by discharging at or below the flood level rim of another fixture or receptacle whose flood level rim is lower than the bottom of the protected fixture, appliance, or device.

AIR GAP (DRAINAGE SYSTEM). The unobstructed vertical distance through the free atmosphere between the outlet of a waste pipe and the flood level rim of the fixture or receptacle into which it is discharging.

AIR GAP (WATER DISTRIBUTION SYSTEM). The unobstructed vertical distance through the free atmosphere between the lowest opening from any pipe or faucet supplying water to a tank, plumbing fixture, or other device, and the floor level rim of the receptacle.

AN APPROVED NATIONALLY RECOGNIZED TESTING LABORATORY is one acceptable to the authorities having jurisdiction that provides uniform testing and examination procedures under established standards, is properly organized, equipped, and qualified for testing, and has a follow-up inspection service of the current production of the listed products.

BACKFLOW. The flow of water or other liquids, mixtures, or substances into the distributing pipes of the potable supply of water from any sources or source other than its intended source. Back-siphonage is one type of backflow.

BACKFLOW CONNECTION. Any condition whereby backflow can occur.

7818 Con.

BACKFLOW PREVENTER. A device or means to prevent backflow into the potable water system.

BRAZED JOINT is a gas-tight joint obtained by the joining of metal parts with alloys which melt at temperatures higher than 800°F. but less than the melting temperatures of the joined parts.

BRINE is any liquid, used for the transmission of heat without a change in its state, having no flash point or a flash point above 150°F. determined by American Society for Testing and Materials method D93. (See Appendix 78-1).

CENTRIFUGAL COMPRESSOR is a non-positive displacement compressor which depends at least in part on centrifugal force for pressure use.

COMPANION OR BLOCK VALVES are pairs of mating stop valves, valving off sections of systems and arranged so that these sections may be joined before opening these valves or separated after closing them.

COMPRESSOR is a specific machine, with or without accessories, for compressing a given refrigerant vapor.

COMPRESSOR UNIT is a condensing unit less than the condenser and liquid receiver.

CONDENSER is that part of the system designed to liquefy refrigerant vapor by removal of heat.

CONDENSER COIL is a condenser constructed of pipe or tubing other than a shell and tube or shell and coil type.

CONDENSING UNIT is a specific refrigerating machine combination for a given refrigerant, consisting of one or more power-driven compressors, condensers, liquid receivers (when required), and the regularly furnished accessories.

CONTAINER is a cylinder for the transportation of refrigerant. (See Appendix 78-2).

7809 Cont

COOLING TOWER is a fixture or structure used to cool water by vaporizing some of the water into the atmosphere.

CRITICAL PRESSURE, CRITICAL TEMPERATURE and CRITICAL COLUME are the terms given to the state points of a substance at which liquid and vapor have identical properties. Above the critical pressure or critical temperature there is no line of demarcation between liquid and gaseous phases.

DEPARTMENT STORE is the entire space occupied by one tenant or more than one tenant in an individual store where more than 100 persons commonly assemble on other than the street-level floor for the purpose of buying personal wearables and other merchandise.

DESIGN PRESSURE is the maximum allowable working pressure, psig, for which a specific part of a system is designed.

DIRECT SYSTEM - see SBC 7810-~~3~~.1-A

DOUBLE DIRECT SYSTEM - see SBC 7810-~~4~~.1B

DOUBLE INDIRECT VENTED OPEN-SPRAY SYSTEM - see SBC 7810-~~4B~~.1C4.

DUCT is a tube or conduit used for conveying or encasing purposes as specifically defined below:

1. Air Duct is a tube or conduit used for conveying air. (The air passages of self-contained systems are not to be construed as air ducts).

2. Pipe Duct is a tube or conduit used for encasing pipe.

3. Wire Duct is a tube or conduit used for encasing either moving or stationary wire, rope, etc.

ENTRANCE is a confined passageway immediately adjacent to the door through which people enter a building.

EVAPORATOR is that part of the system designed to vaporize liquid refrigerant to produce refrigeration.

7808 CONT

EVAPORATOR COIL is an evaporator constructed of pipe or tubing other than a shell and tube or shell and coil type.

EXIT is a confined passageway immediately adjacent to the door through which people leave a building.

FIELD TEST is a test performed in the field to prove system tightness.

FUSIBLE PLUG is a device having a predetermined temperature fusible member for the relief of pressure.

GENERATOR is a device equipped with a means of heating used in an adsorption system to drive refrigerant out of solution.

HALLWAY is a corridor for the passage of people.

HIGH SIDE means the parts of a refrigerating system subjected to condenser pressure.

HUMANLY OCCUPIED SPACE is a space normally frequented or occupied by people but excluding machinery rooms and walk-in coolers used primarily for refrigerated storage.

INDIRECT CLOSED-SURFACE SYSTEM - see 7810-~~B~~. 102

INDIRECT OPEN-SPRAY SYSTEM - see 7810-~~A~~. 101

INDIRECT SYSTEM - see 7810-~~A~~ 1C

INDIRECT VENTED CLOSED-SURFACE SYSTEM - see 7810-~~C~~. 103

INDIRECT WASTE PIPE. A waste pipe that does not connect directly with the drainage system but conveys liquid wastes by discharging into a plumbing fixture or receptacle which is directly connected to the drainage system.

INDUSTRIAL WASTES. Liquid or water borne wastes from industrial or commercial processes except domestic sewage.

7818 Cont

INTERNAL GROSS VOLUME is the volume as determined from internal dimensions of the container with no allowance for volume of internal parts.

LIMITED CHARGE SYSTEM is a system in which, with the compressor idle, the internal volume and total refrigerant charge are such that the design pressure will not be exceeded by complete evaporation of the refrigerant charge.

LIQUID WASTE. The discharge from any fixture, appliance, or appurtenance which does not receive fecal matter.

LISTED means equipment that has been tested and is identified as acceptable by an approved nationally recognized testing laboratory.

LIQUID RECEIVER is a vessel permanently connected to a system by inlet and outlet pipes for storage of a liquid refrigerant.

LOBBY is a waiting room, or large hallway serving as a waiting room.

LOW SIDE means the parts of a refrigerating system subjected to evaporator pressure.

MACHINERY is the refrigerating equipment forming a part of the refrigerating system including any or all of the following: compressor, condenser, generator, absorber (adsorber), liquid receiver, connecting piping, or evaporator.

MACHINERY ROOM is a room in which a refrigerating system is permanently installed and operated but not including evaporators located in a cold storage room, refrigerator box, air cooled space, or other enclosed space. Closets solely contained within, and opening only into a room, shall not be considered machinery rooms but shall be considered a part of the machinery room in which they are contained or open into. It is not the intent of this definition to cause the space in which a self-contained system is located to be classified as a machinery room.

MACHINERY ROOM CLASS T is a machinery room with specific restrictions and requirements. See SBC 7817-13E.

7818 Cont

MANUFACTURER is the company or organization which evidences its responsibility by affixing its name or nationally registered trademark or trade name to the refrigeration equipment concerned.

MECHANICAL JOINT is a gas-tight joint, obtained by the joining of metal parts through a positive-holding mechanical construction.

NONPOSITIVE DISPLACEMENT COMPRESSOR is a compressor in which increase in vapor pressure is attained without changing the internal volume of the compression chamber.

PIPING means the pipe or tube mains for inter-connecting the various parts of a refrigerating system. Piping includes pipe, flanges, bolting, gaskets, valves, fittings, the pressure containing parts of other components such as expansion joints, strainers, and devices which serve such purposes as mixing, separating, snubbing, distributing, metering or controlling flow, pipe supporting fixtures and structural attachments.

POSITIVE DISPLACEMENT COMPRESSOR is a compressor in which increase in pressure is attained by changing the internal volume of the compression chamber.

PREMISES are the buildings and that part of the grounds of one property, where an installation would affect the safety of those buildings or adjacent property.

PRESSURE-IMPOSING ELEMENT is any device or portion of the equipment used for the purpose of increasing the refrigerant vapor pressure.

PRESSURE-LIMITING DEVICE is a pressure-responsive mechanism designed to automatically stop the operation of the pressure-imposing element at a predetermined pressure.

PRESSURE-RELIEF DEVICE is a pressure actuated valve or rupture member designed to automatically relieve excessive pressure.

PRESSURE-RELIEF VALVE is a pressure-actuated valve held closed by a spring or other means and designed to automatically relieve pressure in excess of its setting.

PRESSURE VESSEL is any refrigerant-containing receptacle of a refrigerating system, other than evaporators (each separate section of which does not exceed 1/2 cu ft of refrigerant-containing volume), evaporator coils, compressors, condenser coils, controls, headers, and piping.

REFRIGERANT is a substance used to produce refrigeration by its expansion or vaporization.

REFRIGERATING SYSTEM is a combination of interconnected refrigerant-containing parts constituting one closed refrigerant circuit in which a refrigerant is circulated for the purpose of extracting heat. (See SBC 7810 for classification of refrigerating systems by type).

RUPTURE MEMBER is a device that will rupture at a predetermined pressure.

SATURATION PRESSURE of a refrigerant is the pressure at which there is stable coexistence of the vapor and liquid or the vapor and solid phase.

SEALED ABSORPTION SYSTEM is a unit system for Group 2 refrigerants only in which all refrigerant-containing parts are made permanently tight by welding or brazing against refrigerant loss. (See SBC 7812-1B and 3A).

SELF CONTAINED SYSTEM is a complete factory-made and factory-tested system in a suitable frame or enclosure which is fabricated and shipped in one or more sections and in which no refrigerant-containing parts are connected in the field other than by companion or block valves.

SHALL. Where "shall" or "shall not" is used for a provision specified, that provision is intended to be mandatory.

SHOULD. "Should" or "it is recommended" is used to indicate provisions which are not mandatory but which are recommended good practice.

SOLDERED JOINT is a gas-tight joint obtained by the joining of metal parts with metallic mixtures or alloys which melt at temperatures not exceeding 800°F. and above 400°F.

STOP VALVE is a device to shut off the flow of refrigerant.

TENANT shall be construed as a person, firm or corporation possessed with the legal right to occupy premises.

ULTIMATE STRENGTH is the highest stress level which the component can tolerate without rupture.

UNPROTECTED TUBING is tubing which is not protected by enclosure or suitable location so that it is exposed to crushing, abrasion, puncture or similar mechanical damage under installed conditions.

UNIT SYSTEM is a self-contained system which has been assembled and tested prior to its installation and which is installed without connecting any refrigerant-containing parts. A unit system may include factory-assembled companion or block valves.

WATER OUTLET. A discharge opening through which water is supplied to a condenser, compressor, or any part of the refrigerating system.

WELDED JOINT is a gas-tight joint, obtained by the joining of metal parts in the plastic or molten state.

SBC 7809 Occupancy Classification.

1. Locations governed by this Code in which refrigerating systems may be placed are grouped by occupancy as follows:

   ~~(a)~~ A. Institutional Occupancy shall apply to that portion of the premises in which persons are confined to receive medical, charitable, educational, or other care or treatment, or in which persons are held or detained by reason of public or civic duty, including among others, hospitals, asylums, sanitariums, police stations, jails, court houses with cells and similar occupancies.

~~(b)~~ B. Public Assembly Occupancy shall apply to that portion of the premises in which persons congregate for civic, political, educational, religious, social, or recreational purposes; including among others, armories, assembly rooms, auditoriums, ballrooms, bath houses, bus terminals, broadcasting studios, churches, colleges, court houses without cells, dance halls, department stores, exhibition halls, fraternity halls, libraries, lodge rooms, mortuary chapels, museums, passenger depots, schools, skating rinks, subway stations, theaters, and similar occupancies.

~~(c)~~ C. Residential Occupancy shall apply to that portion of the premises in which sleeping accommodations are provided, including among others, club houses, convents, dormitories, hotels, lodging houses, multiple story apartments, residences, studios, tenements, and similar occupancies.

~~(d)~~ D. Commercial Occupancy shall apply to that portion of the premises used for the transaction of business; for the rendering of professional services; for the supplying of food, drink, or other bodily needs and comforts; for manufacturing purposes or for the performance of work or labor (except as included under (E) Industrial Occupancy) including among others, bake shops, fur storage, laboratories, loft buildings, markets, office buildings, professional buildings, restaurants, stores other than department stores, and similar occupancies.

~~(e)~~ E. Industrial Occupancy shall apply to an entire building or premises or to that portion of a building used for manufacturing, processing, or storage of materials or products, including among others, chemical, food, candy and ice cream factories, ice-making plants, meat packing plants, refineries, perishable food warehouses and similar occupancies, provided the entire building is occupied by a single tenant. In an Industrial Occupancy, when the number of persons in a refrigerated space, served by a direct system, on any floor above the first floor (ground level or deck level) exceeds one person per 100 sq. ft. of floor area, the requirements of Commercial Occupancy shall apply unless that refrigerated space containing more than one person per 100 sq. ft. of floor area above the first floor is provided with the required number of doors opening directly into approved building exits. Such refrigerated space shall be cut off from the rest of the building by tight construction with tight-fitting doors. (See Appendix ~~78-17~~).

NOTE: The above does not prohibit openings for the passage of products from one refrigerated space to another refrigerated space.

~~(f)~~ F. Mixed Occupancy shall apply to a building occupied or used for different purposes in different parts. When the occupancies are cut off from the rest of the building by tight partitions, floors, and ceilings and protected by self-closing doors, the requirements for each type of occupancy shall apply for its portion of the building or premises. For example, the cold storage spaces in retail frozen food lockers, hotels, and department stores in buildings occupied by a single tenant might be classified under Industrial Occupancy, whereas other portions of the building would be classified under other occupancies. When the occupancies are not so separated, the occupancy carrying the more stringent requirements shall govern.

2. Adjacent Locations. Equipment installed in locations adjacent to areas outlined in SBC 7809 ~~(A)~~ through ~~(F)~~ including outdoor installations, shall be governed by the applicable requirements of this Code.

SBC 7810 Refrigerating System - Classification by Type

1. Refrigerating Systems are classified by the method employed for extracting heat as follows:

   A. Direct System is one in which the evaporator is in direct contact with the material or space refrigerated or is located in air-circulating passages communicating with such spaces. (See Figure 78-1).

   B. Double Direct System is one in which an evaporative refrigerant is used in a secondary circuit to condense or cool a refrigerant in a primary circuit, (See Figure 78-2). For the purpose of this Code, each system enclosing a separate body of an evaporative refrigerant shall be considered as a separate direct system.

   C. Indirect System is one in which a brine cooled by the refrigerant, is circulated to the material or space refrigerated or is used to cool ~~air~~ so circulated, (See Figure 78-3). Indirect systems which are distinguished by the type or method of application are as given in the following paragraphs:

      1) Indirect Open-Spray System is one in which a brine cooled by an evaporator located in an enclosure external to a cooling chamber, is circulated to such cooling chamber and is sprayed therein.

7810 cont

2. Indirect Closed-Surface System is one in which a brine cooled by an evaporator located in an enclosure external to a cooling chamber, is circulated to and through such a cooling chamber in pipes or other closed circuits.

3. Indirect Vented Closed-Surface System is one in which a brine cooled by an evaporator located in a vented enclosure external to a cooling chamber, is circulated to and through such cooling chamber in pipes or other closed circuits.

4. Double Indirect Vented Open-Spray System is one in which a brine cooled by an evaporator located in a vented enclosure, is circulated through a closed circuit to a second enclosure where it cools another supply of a brine and this liquid in turn is circulated to a cooling chamber and is sprayed therein.

SBC 7811 Refrigerant Classification

1. General. Refrigerants shall be classified by their toxicity or flammability and accordingly are divided into three (3) groups: See Table 78-A.

SBC 7812 Requirements for Institutional, Public Assembly, Residential, and Commercial Occupancies.

1. General.

~~(a)~~ A. Public Stairway, Stair Landing, entrance or exit. No refrigerating system shall be installed in or on a public stairway, stair landing, entrance, or exit.

~~(b)~~ B. Public hallway or lobby. No refrigerating system shall interfere with free passage. No Group 2 refrigerant shall be permitted in public hallways or lobbies of Institutional or Public Assembly Occupancies. Refrigerating systems installed in a public hallway or lobby shall be limited to:

1. Unit systems containing not more than the quantities of a Group 1 refrigerant specified in Table 78-B.

2. Sealed absorption systems containing not more than 3 lbs. of Group 2 refrigerant when in Residential and Commercial Occupancies.

~~(c)~~ C. When the refrigerant-containing parts of a system are located in one or more enclosed spaces, the cubical content of the smallest enclosed humanly occupied space other than the machinery room, shall be used to determine the permissible quantity of refrigerant in the system. Where a refrigerating system has evaporator coils serving individual stories of a building, the story having the smallest volume shall be used to determine the maximum quantity of refrigerant in the entire system.

~~(d)~~ D. When the evaporator is located in an air duct system, cubical content of the smallest humanly occupied enclosed space served by the air duct system shall be used to determine the permissible quantity of refrigerant in the system; however, if the air flow to any enclosed space served by the air duct system cannot be shut off or reduced below one-quarter of its maximum, the cubical contents of the entire space served by the air duct system may be used to determine the permissible quantity of refrigerant in the system.

~~(e)~~ E. In Institutional and Public Assembly Occupancies, direct expansion coils or evaporators used for air conditioning and located downstream from, and in proximity to, a heating coil, or located upstream within 18 in. of a heating coil , shall be fitted with a pressure relief device discharging to the outside of the building in an approved manner; except that such a relief device shall not be required on unit or self-contained systems if the internal volume of the low side of the system which may be shut off by valves, divided by the total weight of refrigerant in the system less the weight of refrigerant vapor contained in the other parts of the system at 100° F., exceeds the specific volume of the refrigerant at critical conditions of temperature and pressure.

NOTE: The above exemption is also stated in formula form below.

$$\frac{V_1}{W_1 - W_2} \quad \text{shall be more than } V_{sp}$$

Where V_1 = low side volume, cu. ft.

V_{sp} = specific volume at critical conditions of temperature and pressure, cu. ft. per lb.

W_1 = total weight of refrigerant in system, lb.

W_2 = weight of refrigerant vapor (lb) at 110 F. in V_2,

$$= \frac{V_2}{\text{specific volume of refrigerant, in cu. ft. per lb., at 110°F., where } V_2 = \text{total volume of system less } V_1 \text{ cu. ft.}}$$

7812 cont

2. Group 1 Refrigerants.

A. Direct Systems. The maximum permissible quantity of a Group 1 refrigerant in a direct system shall be as specified in Table 78-B except for additional limitations specified in SBC 7812 - 2A1 Institutional Occupancies.

Direct Systems in Institutional Occupancies shall be limited to systems each containing not more than 50% of the permissible quantities of Group 1 refrigerants specified in Table 78-B except in kitchens, laboratories and mortuaries.

B. Indirect Systems. A system containing more than the quantity of a Group 1 refrigerant allowed in Table 78-B shall be of the indirect type with all refrigerant-containing parts, excepting parts mounted outside the building and piping installed in accordance with Section SBC 7817-12C, installed in a machinery room used for no other purpose than for mechanical equipment.

C. Open Flames in machinery rooms. No open flames or apparatus to produce an open flame shall be installed in a machinery room where any refrigerant other than carbon dioxide is used unless the flame is enclosed and vented to the open air. The use of matches, cigarette lighters, halide leak detectors, and similar devices shall not be considered a violation of this paragraph or of SBC 7812 - 2D.

D. Open Flames in Institutional Occupancies. In Institutional occupancies, where more than 1 lb. of a Group 1 refrigerant, other than carbon dioxide, is used in a system, any portion of which is in a room where there is an apparatus for producing an open flame, then such refrigerant shall be classed in Group 2, unless the flame-producing apparatus is provided with a hood and flue capable of removing the products of combustion to the open air.

3. Group 2 Refrigerants.

A. Direct Systems. Direct systems containing Group 2 refrigerants shall not be used for air conditioning for human comfort. For other applications, the maximum permissible quantity of Group 2 refrigerants in a direct system shall be as specified in Table 78-C.

B. Indirect Systems. The maximum permissible quantity of Group 2 refrigerant in any indirect system shall be as specified in Table 78-D. Such systems shall be of the following type:

1. Institutional and Public Assembly Occupancies - indirect vented closed-surface, or double indirect vented open spray.

2. Residential and Commercial Occupancies - indirect closed-surface, indirect vented closed-surface, or double indirect vented open-spray, or secondary circuit of double direct type.

(a) Indirect Systems using Group 2 refrigerants not in excess of the quantities shown in Column 1 of Table 78-D shall have all refrigerant-containing parts, excepting parts mounted outside the building and piping installed in accordance with SBC 7817-12C installed in a machinery room used for no other purpose than for mechanical equipment.

(b) Indirect Systems using Group 2 refrigerants not in excess of the quantities shown in Column 2 of Table 78-D shall have all refrigerant-containing parts, excepting parts mounted outside the building and piping, installed in accordance with SBC 7817-12C installed in a Class T machinery room.

(c) Flame-Producing Devices, Hot Surfaces, and Electrical Equipment in machinery rooms. Where a machinery room is required by this Code to house a refrigerating system containing any Group 2 refrigerant other than sulphur dioxide, no flame-producing device or hot surface above 800°F. shall be permitted in such room and all electrical equipment in the room shall conform to the requirements of Hazardous Locations Class I, Division 2, of the latest edition of the National Electrical Code. (See Appendix 78-6). The use of matches, cigarette lighters, halide leak detectors, combustion engines, gas turbines and similar devices shall not be considered a violation of this paragraph, provided the quantities of Group 2 refrigerants in Table 78-E are not exceeded.

(d) Group 2 refrigerants listed in Table 78-E shall not be used to a refrigerating system in excess of 1,000 lbs. unless approved by the authority having jurisdiction.

4. Group 3 Refrigerants.

   A. Group 3 refrigerants shall not be used in Institutional, Public Assembly, Residential, or Commercial Occupancies except in laboratories for Commercial Occupancies. In such laboratory installations only unit systems containing not more than 6 lbs. shall be used unless the number of persons does not exceed one person per 100 sq. ft. of laboratory floor area, in which case the requirements of SBC 7813 shall apply.

SBC 7813 Requirements for Industrial Occupancies

1. General. There shall be no restrictions on the quantity or kind of refrigerant used in an Industrial Occupancy, except as specified below in Sections 2 and 3.

2. Open Flames. When the quantity of flammable refrigerant in any one refrigerating system exceeds the amount given in Table 78-E for each 1,000 cu. ft. of room volume in which the system or any part thereof is installed, then no flame-producing device or hot surface above 800°F. shall be permitted in such room and all electrical equipment in the room shall conform to the requirements of Hazardous Locations Class I, Division 2, of the latest edition of the National Electrical Code. (See Appendix 78-6).

3. Flammable Refrigerants as listed in Table 78-E, shall not be used in a refrigerating system in excess of 1000 lbs. unless approved by the authority having jurisdiction.

SBC 7814 Design and Construction of Equipment

1. Materials

   ~~(a)~~ A. All materials used in the construction and installation of refrigerating systems shall be suitable for conveying the refrigerant used. Some refrigerants are corrosive to the usual materials when moisture or air, or both, are present. No material shall be used that will deteriorate because of the refrigerant, or the oil, or the combination of both.

   ~~(b)~~ B. Aluminum, Zinc, or Magnesium shall not be used in contact with methyl chloride in a refrigerating system. Magnesium alloys shall not be used in contact with any halogenated refrigerant.

2. Design Pressure

~~(a)~~ A. Design pressures shall be selected high enough for all operating and standby conditions. When selecting the design pressure, consideration should be given to allowances for setting pressure-limiting devices and pressure-relief devices sufficiently above operating conditions to avoid nuisance shutdowns and for shipping conditions.

Minimum design pressure shall not be less than 15 psia and except as noted below in SBC 7814 (B,C and D), shall not be less than the saturation pressure of the refrigerant at the following temperatures:

1. Low sides of all systems +80°F

2. High side of water or evaporatively cooled systems +105°F

3. High sides of air-cooled systems +125°F

Corresponding pressures are given in Table 78-F for the refrigerants in common use.

~~(b)~~ B. The design pressure for either the high or low side need not exceed the critical pressure of the refrigerant unless the system is intended to operate at these conditions.

~~(c)~~ C. When a part of a limited charged system is protected by a pressure-relief device, the design pressure of that part need not exceed the setting of the pressure-relief device.

~~(d)~~ D. When a compressor is used as a booster to obtain a low pressure and discharges into the suction side of another system, the booster compressor is considered a part of the low side provided that a low pressure stage compressor of the positive displacement type is protected by a pressure-relief device.

~~(e)~~ E. Any components connected to pressure vessels shall have a design pressure equal to or greater than the pressure vessels.

3. Refrigerant-Containing Pressure Vessels

~~(a)~~ A. Pressure Vessels exceeding 6 in. inside diameter, except those having a maximum internal or external design pressure 15 psig or less, shall comply with the rules of Section VIII of the ASME Boiler and Pressure Vessel Code, (see Appendix 78-15), covering the requirements for the design, fabrication, inspection and testing during construction of unfired pressure vessels.

~~(b)~~ B. Pressure Vessels not exceeding 6 in. inside diameter, except those having a maximum internal or external design pressure of 15 psig or less, shall be listed either individually or as part of refrigeration equipment, by an approved nationally recognized testing laboratory or shall be constructed according to SBC 7814-3A.

~~(c)~~ C. Pressure Vessels having a maximum internal or external design pressure of 15 psig or less, except as noted below in SBC 7814-D and E, shall have an ultimate strength to withstand at least three times the design pressure and shall be tested to at least 1-1/3 times the design pressure for which they are rated.

~~(d)~~ D. If a pressure-relief device is used to protect a pressure vessel not exceeding 6 in. inside diameter, the ultimate strength of the pressure vessel so protected shall be sufficient to withstand at least 2-1/2 times the pressure setting of the pressure-relief device.

~~(e)~~ E. If a fusible plug is used to protect a pressure vessel not exceeding 6 in. inside diameter, the ultimate strength of the pressure vessel so protected shall be sufficient to withstand at least 2-1/2 times the refrigerant saturation pressure corresponding to the stamped temperature on the fusible plug, or at least 2-1/2 times the critical pressure of the refrigerant used, whichever is smaller.

4. Refrigerant Piping, Valves, Fittings, and Related Parts

~~(a)~~ A. General. Refrigerating piping, valves, fittings, and related parts, except those having a maximum internal or external design pressure 15 psig or less, shall be listed either individually or as part of refrigeration equipment by an approved nationally recognized testing laboratory or shall comply with the rules of Section 5 of the ANSI Code for Pressure Piping where applicable (see Appendix 78-10). and to the following requirements:

~~(b)~~ B. Specific Minimum Requirements for unprotected refrigerant pipe and tubing.

1. Unprotected watertube size hard copper tubing used for refrigerant piping erected on the premises, shall conform to ASTM Specification B88 Types K or L (see Appendix 78-13) for dimensions and specifications. Copper tubing with an outside diameter of 1/4 in. shall have a minimum nominal wall thickness of not less than 0.030 in.

2. Unprotected soft annealed copper tubing used for refrigerant piping erected on the premises, shall not be used in sizes larger than 1-3/8 in. outside diameter. It shall conform to ASTM Specification B280. (See Appendix 78-14). Minimum nominal wall thickness of soft unprotected annealed copper tubing shall be as follows:

Outside Diameter In.	Wall Thickness In.
0.250	0.030
0.375	0.030
0.500	0.032
0.625	0.035
0.750	0.042
0.875	0.045
1.000*	0.050
1.125	0.050
1.250*	0.055
1.375	0.055

*Not included as standard size in ASTM B280

~~(c)~~ C. Metal Enclosures or pipe ducts for Soft Copper Tubing

Rigid or flexible metal enclosures shall be provided for soft, annealed copper tubing used for refrigerant piping erected on the premises and containing Group 2 or 3 refrigerants, except that no enclosures shall be required for connections between condensing unit and the nearest riser box, provided such connections do not exceed 6 ft. in length.

~~(d)~~ D. Joints on copper tubing used in refrigerating systems containing Group 2 or Group 3 refrigerants, shall be brazed joints. Soldered joints shall not be used in such refrigerating systems.

5. Components other than Pressure Vessels and Piping

~~(a)~~ A. Every pressure-containing component of a refrigerating system other than pressure vessels, piping, pressure gages and control mechanisms, shall be listed either individually or as part of refrigeration equipment by an approved nationally recognized testing laboratory or shall be designed, constructed and assembled to have an ultimate strength sufficient to withstand at least three times the design pressure for which it is rated.

~~(b)~~ B. Liquid level gage glasses, except those of the bull's eye or reflex type, shall have automatic closing shut-off valves, and such glasses shall be adequately protected against injury.

~~(c)~~ C. Dial of a pressure gage, when the gage is permanently installed on the high side of a refrigerating system, shall be graduated to at least 1.2 times the design pressure.

~~(d)~~ D. Liquid receivers or parts of a system designed to receive the refrigerant charge during pumpdown, shall have sufficient capacity to receive the charge without the liquid occupying more than 90% of the volume when the temperature of the refrigerant is 90°F.

~~(e)~~ E. Butt welded steel, other than open hearth type which is not rephosphorized, or wrought iron pipe shall not be used for evaporator or condenser coils.

6. Service Provisions

~~(a)~~ A. General. All systems shall have provisions to handle, safely, the refrigerant charge for service purposes. Properly located stop valves, separate storage tanks, or adequate venting for safe disposal are satisfactory for this purpose.

~~(b)~~ B. Systems containing more than 6 lbs. of a Group 2 or 3 refrigerant, other than systems utilizing nonpositive displacement compressors, shall have stop valves installed as follows:

1. Each inlet of each compressor, compressor unit, or condensing unit.

2. Each discharge outlet of each compressor, compressor unit, or condensing unit, and of each liquid receiver.

~~(c)~~ C. Systems containing 100 lbs. or more of refrigerant. All systems containing 100 lbs. or more of a refrigerant, other than systems utilizing nonpositive displacement compressors, should have stop valves, in addition to those in Section 6-B on each inlet of each liquid receiver except on the inlet of a receiver in a condensing unit or on the inlet of a receiver which is an integral part of a condenser.

~~(d)~~ D. Stop valves used with soft annealed copper tubing or hard drawn copper tubing 7/8 in. outside diameter or smaller shall be securely mounted, independent of tubing fastenings or supports.

~~(e)~~ E. Stop valves shall be suitably labeled if it is not obvious what they control. Numbers may be used to label the valves provided a key to the numbers is located near the valves.

7. Factory Tests

~~(a)~~ A. Every refrigerant-containing part of every system shall be tested and proved tight by the manufacturer at not less than the design pressure for which it is rated, except as noted below, in B,C and C-1.

~~(b)~~ B. Pressure vessels shall be tested in accordance with SBC 7814-3 of this Code.

~~(c)~~ C. The test pressure applied to the high side of each factory assembled refrigerating system shall be at least equal to the design pressure of the component in the high side which has the lowest rated design pressure. The test pressure applied to the low side of each factory-assembled refrigerating system shall be at least equal to the design pressure of the component in the low side which has the lowest rated design pressure.

In testing systems using nonpositive displacement compressors, the entire system shall be considered for test purposes as the low side pressure.

8. Nameplate

Each unit system and each separate condensing unit, compressor or compressor unit sold for field assembly in a refrigerating system shall carry a nameplate marked with the manufacturer's name, nationally registered trademark or trade name, identification number, the design pressures, and the refrigerant for which it is designed. The refrigerant shall be designated according to the ANSI B79.1-1968 Number Designation of Refrigerants.

SBC 7815 Pressure-Limiting Devices

1. Pressure-limiting devices shall be provided on all systems containing more than 20 lbs. of refrigerant and operating above atmospheric pressure, and on all water-cooled systems so constructed that the compressor or generator is capable of producing a pressure in excess of the high side design pressure; except water-cooled unit systems containing not more than 3 lbs. of a Group 1 refrigerant providing the operating pressure developed in the system with the water supply shut off does not exceed one-fifth the ultimate strength of the system, or providing an overload device will stop the action of the compressor before the pressure exceeds one-fifth the ultimate strength of the system.

2. When required by SBC 7815-1, the maximum setting to which a pressure-limiting device may readily be set by use of the adjusting means provided shall not exceed the design pressure of the high side of a system which is not protected by a pressure-relief device or 90% of the setting of the pressure-relief device installed on the high side of a system except as provided in 7815-2A. The pressure-limiting device shall stop the action of the pressure-imposing element at a pressure no higher than this maximum setting.

   ~~(a)~~ A. On systems using nonpositive displacement compressors, the pressure-limiting device may be set at the design pressure of the high side of the system provided the pressure-relief device is subject to low side pressure and there are no stop valves on the system.

3. Pressure-limiting devices, when required by SBC 7815-1, shall be connected between the pressure-imposing element and any stop valve on the discharge side with no intervening stop valves in the line leading to the pressure-limiting device.

SBC 7816 Pressure-Relief Protection

1. General. Every refrigerating system shall be protected by a pressure-relief device or some other means designed to safely relieve pressure due to fire or other abnormal conditions.

   ~~(a)~~ A. In addition, all pressure vessels shall be protected in accordance with the requirements of SBC 7816-4.

   ~~(b)~~ B. All pressure-relief devices (not fusible plugs) shall be directly pressure actuated. Each part of a refrigerating system which can be valved off and which contains one or more pressure vessels having internal diameters greater than 6 in. and containing liquid refrigerant shall be protected by a pressure-relief device.

~~(c)~~ C. Stop valves shall not be located between the means of pressure relief and the part or parts of the system protected thereby, except when the parallel relief devices mentioned in SBC 7916-4B are so arranged that only one can be rendered inoperative at a time for testing or repair purposes.

~~(d)~~ D. All pressure-relief devices shall be connected as nearly as practicable directly to the pressure vessel or other parts of the system protected thereby, above the liquid refrigerant level, and installed so that they are readily accessible for inspection and repair and so that they cannot be readily rendered inoperative. Fusible plugs may be located above or below the liquid refrigerant level except on the low side.

~~(e)~~ E. The seats and discs of pressure-relief devices shall be constructed of suitable material to resist refrigerant corrosion or other chemical action caused by the refrigerant. Seats or discs of cast iron shall not be used.

2. Setting of Pressure-Relief Devices

~~(a)~~ A. Pressure-Relief Valve Setting. All pressure-relief valves shall not be set to start to function at a pressure not to exceed the design pressure of the parts of the system protected.

~~(b)~~ B. Rupture Member Setting. All rupture members used in lieu of, or in series with, a relief valve shall have a nominal rated rupture pressure not to exceed the design pressure of the parts of the system protected. The conditions of application shall conform to the requirements of Section VIII, Division 1, of the ASME Boiler and Pressure Vessel Code.

Rupture members installed ahead of relief valves need not be larger, but shall not be smaller, than the relief valve inlet.

3. Marking of Relief Devices and Fusible Plugs

~~(a)~~ A. All pressure-relief valves for refrigerant-containing components shall be set and sealed by the manufacturer. Each pressure-relief valve shall be marked by the manufacturer with the data required in Paragraph UG-129 (a) of Section VIII, Division 1, of the ASME Boiler and Pressure Vessel Code except relief valves for systems with design pressures of 15 psig or less may be marked by the manufacturer with the pressure setting and capacity.

~~(b)~~ B. Each rupture member for refrigerant-containing pressure vessels shall be marked with the data required in Paragraph UG-129 (d) of Section VIII, Division 1, of the ASME Boiler and Pressure Vessel Code.

~~(c)~~ C. Fusible plugs shall be marked with the melting temperature in degrees F.

4. Pressure Vessel Protection

~~(a)~~ A. General. Pressure vessels shall be provided with pressure relief protection in accordance with rules given in Paragraphs UG-125 to UG-134 inclusive, of Section VIII, Division 1, of the ASME Boiler and Pressure Vessel Code, with such additional modifications as are necessary for control of refrigerants.

~~(b)~~ B. Pressure Vessels over 3 Cu. Ft. Each pressure vessel containing liquid refrigerant with internal gross volume exceeding 3 cu. ft., except as specified in SBC 7816-4D, and which may be shut off by valves from all other parts of a refrigerating system, shall be protected by a pressure-relief device, having sufficient capacity to prevent the pressure in the pressure vessel from rising more than 10% above the setting of the pressure-relief device.

1. Pressure Vessels over 3 cu. ft., but less than 10 cu. ft. Under conditions specified in SBC 7816-4B, a single pressure-relief device may be used on pressure vessels having less than 10 cu. ft. internal gross volume.

2. Pressure vessels of 10 cu. ft. Internal Gross Volume or Over. Under conditions specified in SBC 7816-4B, if a pressure-relief valve is used, a relief device system consisting of pressure-relief valve in parallel with a second pressure-relief valve as described in SBC 7816-1C shall be provided on pressure vessels having internal gross volume of 10 cu. ft. or over. Each pressure-relief valve shall have sufficient capacity to prevent the pressure in the pressure vessel from rising more than 10% above the setting of the pressure-relief valve.

(a) Pressure-Relief Valves Discharging into Low Side of the System. Under conditions permitted in SBC 7816-4H1, a single relief valve (not rupture member) of the required relieving capacity may be used on vessels of 10 cu. ft. or over.

3. Pressure-Relief Devices in Parallel on Large Vessels. In cases where large pressure vessels containing liquid refrigerant except as specified in SBC 7816-4D, require the use of two or more pressure-relief devices in parallel to obtain the capacity required, the battery of pressure-relief devices shall be considered as a unit, and therefore as one pressure-relief device.

~~(c)~~ C. Pressure Vessels with Internal Gross Volume of 3 Cu. Ft. or Less. Each pressure vessel having an internal gross volume of 3 cu. ft. or less, containing liquid refrigerant, except as specified in SBC 7816-4D, and which may be shut off by valves from all other parts of a refrigerating system, shall be protected by a pressure-relief device, or fusible plug. Pressure vessels of less than 3 in. inside diameter are exempt from these requirements.

~~(d)~~ D. Pressure-Relief Device for Pressure Vessels Used As, or as Part of Evaporator. Pressure vessels having internal diameters greater than 6 in. used as, or as part of, evaporators insulated or installed in insulated space, and which may be shut off by valves from all other parts of a refrigerating system shall be protected by a pressure-relief device in accordance with the provisions of SBC 7816-4B and 4C, except that the provisions of SBC 7816-4B2, requiring a second parallel pressure-relief valve, shall not apply. Pressure vessels used as evaporators, having internal diameters of 6 in. or less, are exempt from pressure-relief device requirements.

~~(e)~~ E. Required Capacity. The minimum required discharge capacity of the pressure-relief device or fusible plug for each pressure vessel shall be determined by the following:

$$C = fDL \qquad (1)$$

Where C = minimum required discharge capacity of the relief device in lb of air per min
D = outside diameter of the vessel in ft
L = length of the vessel in ft
f = factor dependent upon kind of refrigerant, as follows:

Kind of Refrigerant	Value of f
Ammonia (Refrigerant 717)	0.5
Refrigerants 12, 22 and 500	1.6
Refrigerant 502 and Refrigerants 13, 13B1, and 14 when on cascaded systems	2.5
All other refrigerants	1.0

When one pressure-relief device or fusible plug is used to protect more than one pressure vessel the required capacity shall be the sum of the capacities required for each pressure vessel.

~~(f)~~ F. The rated discharge capacity of a pressure-relief valve expressed in pounds of air per minute, shall be determined in accordance with Paragraph UG-131, Section VIII, of the ASME Boiler and Pressure Vessel Code. (See Appendix 78-15). All pipe and fittings between the pressure-relief valve and the parts of the system it protects shall have at least the area of the pressure-relief valve inlet.

~~(g)~~ G. The rated discharge of capacity of a rupture member or fusible plug discharging to atmosphere under critical flow conditions in pounds of air per minute shall be determined by the following formulas:

$$C = 0.8\ P_1 d^2 \qquad (2)$$

$$d = 1.12 \sqrt{\frac{C}{P_1}}$$

Where C = rated discharge capacity, in lb of air per min.
d = smallest of the internal diameter of the inlet pipe, retaining flanges, fusible plug or rupture member in in.

Where for rupture members:

P_1 = (rated pressure X 1.10) = 14.7

For fusible plugs:

P_1 = absolute saturation pressure, corresponding to the stamped temperature melting point of the fusible plug or the critical pressure of the refrigerant used, whichever is smaller, psia

~~(h)~~ H. Discharge of pressure-relief devices and fusible plugs on all systems containing more than 6 lbs. of Group 2 or Group 3 refrigerants shall be to the outside of the building in an approved manner. Discharge of pressure-relief devices and fusible plugs on all systems containing more than 100 lbs. of Group 1 refrigerants, unless installed in a machinery room used for no purpose other than to house mechanical equipment and complying with the provisions as specified in SBC 7817-13, shall be to the outside of the building.

Discharge piping connected to the discharge side of a fusible plug or bursting disc shall have provisions to prevent plugging the piping, in the event the fusible plug or bursting disc functions.

1. Pressure-relief valves may discharge into the low side of the system, provided the pressure-relief devices are of a type not appreciably affected by back pressures and provided the low side of the system is equipped with pressure-relief devices. The relief devices on the low side of the system shall have sufficient capacity to protect the pressure vessels that are relieved into the low side of the system, or to protect all pressure vessels on the low side of the system, whichever relieving capacity is the largest, as computed by the formula in SBC 7816-4E. Such low side pressure-relief devices shall be set in accordance with SBC 7816-2A and vented to the outside of the building in accordance with SBC 7816-4H.

2. Ammonia Discharge. Where ammonia is used, the discharge may be into a tank of water which shall be used for no purpose except ammonia absorption. At least 1 gallon of fresh water shall be provided for each pound of ammonia in the system. The water used shall be prevented from freezing without the use of salt or chemicals. The tank shall be substantially constructed of not less than 1/8 in. or No. 11 U.S. gage iron or steel. No horizontal dimension of the tank shall be greater than one-half the height. The tank shall have a hinged cover, or, if of the enclosed type, shall have a vent hole at the top. All pipe connections shall be through the top of the tank only. The discharge pipe from the pressure-relief valve shall discharge the ammonia in the center of the tank near the bottom.

3. Sulphur Dioxide Discharge. Where sulphur dioxide is used, the discharge may be into a tank of absorptive brine which shall be used for no purpose except sulphur dioxide absorption. There shall be 1 gallon of standard dichromate brine (2-1/2 lbs. sodium dichromate per gallon of water) for each pound of sulphur dioxide in the system. Brines made with caustic soda or soda ash may be used in place of sodium dichromate, provided the quantity and strength give the equivalent sulphur dioxide absorbing power. The tank shall be substantially constructed of not less than 1/8 in. or No. 11 U.S. gage iron or steel. The tank shall have a hinged cover, or, if of the enclosed type, shall have a vent hole at the top. All pipe connections shall be through the top of the tank only. The discharge pipe from the pressure-relief valve shall discharge the sulphur dioxide in the center of the tank near the bottom.

4. The size of the discharge pipe from the pressure-relief device or fusible plug shall not be less than the size of the pressure-relief device or fusible plug outlet. The discharge from more than one relief device or fusible plug may be run into a common header, the area of which shall be not less than the sum of the areas of the pipes connected thereto.

5. The length of the discharge piping permitted to be installed on the outlet of a pressure-relief device or fusible plug shall be determined as follows:

$$C = \frac{3\ P\ d^{5/2}}{L^{1/2}} \qquad (3)$$

or

$$d = \sqrt[5]{\frac{C^2 L}{9P^2}}$$

where C = minimum required discharge capacity, in lb of air per min
d = internal diameter of pipe in in.
L = length of discharge pipe in ft
P = $0.25P_1$ (P_1 is defined under Eq 2)

(See Table 78-G for computations derived from the preceding formula).

~~(i)~~ J. Pressure-relief devices for positive displacement compressors. Positive displacement compressors operating above 15 psig and having a displacement exceeding 50 cfm, shall be equipped by the manufacturer with a pressure-relief device of adequate size and pressure setting to prevent rupture of the compressor, located between the compressor and stop valve on the discharge side. The discharge from such pressure-relief device may be vented to the atmosphere or into the low pressure side of the system.

SBC 7817 Installation Requirements.

1. Foundations and Supports for condensing units or compressor units shall be of substantial and non-combustible construction when more than 6 in. high.

2. Moving machinery shall be guarded in accordance with approved safety standards. (See Appendix 78-3).

3. Clear Space adequate for inspection and servicing of condensing units or compressor units shall be provided.

4. Condensing units or compressor units with enclosures shall be readily accessible for servicing and inspection.

5. Water Supply and Discharge Connections shall be made in accordance with approved safety and health standards. (See Appendix 78-4).

   ~~(a)~~ A. Discharge water lines shall not be directly connected to the waste or sewer systems. The waste or discharge from such equipment shall be through an approved air gap and trap.

6. Illumination adequate for inspection and servicing of condensing units or compressor units shall be provided. (See Appendix 78-5).

7. Electrical Equipment and Wiring shall be installed in accordance with approved safety standards. (See Appendix 78-6).

8. Gas Fuel Devices and Equipment used with refrigerating systems shall be installed in accordance with approved safety standards. (See Appendix 78-7 and 20).

9. Air Duct Systems or air-conditioning equipment for human comfort using mechanical refrigeration shall be installed in accordance with approved safety standards. (See Appendix 78-8 and 9).

   ~~(a)~~ A. Air ducts passing through a Class T machinery room shall be of tight construction and shall have no openings in such rooms.

10. Joints and Refrigerant-Containing Parts in air ducts. Joints and all refrigerant-containing parts of a refrigerating system located in an air duct carrying conditioned air to and from a humanly occupied space shall be constructed to withstand a temperature of 700°F. without leakage into the air stream.

11. Exposure of Refrigerant Pipe Joints. Refrigerant pipe joints erected on the premises shall be exposed to view for visual inspection prior to being covered or enclosed.

12. Location of Refrigerant Piping.

~~(a)~~ A. Refrigerant piping crossing an open space which affords passageway in any building shall be not less than 7-1/2 ft. above the floor unless against the ceiling of such space.

~~(b)~~ B. Free Passageway shall not be obstructed by refrigerant piping. Refrigerant piping shall not be placed in any elevator, dumbwaiter, or other shaft containing a moving object, or in any shaft which has openings to living quarters or to main exit hallways. Refrigerant piping shall not be placed in public hallways, lobbies, or stairways, except that such refrigerant piping may pass across a public hallway if there are no joints in the section in the public hallway, and provided nonferrous tubing of 1-1/8 in. outside diameter, and smaller, be contained in a rigid metal pipe.

~~(c)~~ C. Refrigerant piping shall not be installed vertically through floors from one story to another except as follows:

1. It may be installed from basement to the first floor, or from the top floor to a machinery penthouse or to the roof.

2. For the purpose of interconnecting separate pieces of equipment not located on adjacent stories, the piping may be carried through intermediate stories in an approved rigid and tight continuous fire-resisting pipe duct or shaft having no openings into the intermediate stories, or it may be carried on the outer wall of the building provided it is not located in an air shaft, closed court or in other similar spaces enclosed within the outer walls of the building. The pipe duct or shaft shall be vented to the outside.

3. Piping of direct systems containing Group 1 refrigerants as governed by SBC 7817-2A, need not be enclosed where it passes through space served by that system.

~~(d)~~ D. Refrigerant piping may be installed horizontally in closed floors or in open joist spaces. Piping installed in concrete floors shall be encased in pipe duct.

13. Machinery Room Requirements.

~~(a)~~ A. Each refrigerating machinery room shall be provided with tight-fitting door or doors and have no partitions or openings that will permit the passage of escaping refrigerant to other parts of the building.

~~(b)~~ B. Each refrigerating machinery room shall be provided with means for ventilation to the outer air. The ventilation shall consist of windows or doors opening to the outer air, of the size shown in Table 78-H, or of mechanical means capable of removing the air from the room in accordance with Table 78-H. The amount of ventilation for refrigerant removal purposes shall be determined by the refrigerant content of the largest system in the machinery room.

~~(c)~~ C. Air supply and return ducts used for machinery room ventilation shall serve no other area.

~~(d)~~ D. Mechanical ventilation, when used, shall consist of one or more power-driven exhaust fans, which shall be capable of removing from the refrigerating machinery room the amount of air specified in Table 78-H. The inlet to the fan, or fans, or air duct connection shall be located near the refrigerating equipment. The outlet from the fan, or fans, or air duct connections shall terminate outside of the building in an approved manner. When air ducts are used either on the inlet or discharge side of the fan, or fans, they shall have an area not less than specified in Table 78-H. Provision shall be made for the inlet of air to replace that being exhausted.

~~(e)~~ E. Machinery room, Class T shall have no flame-producing apparatus permanently installed and operated and also shall conform to the following:

1. Any doors, communicating with the building, shall be approved self-closing, tight-fitting fire doors.

2. Walls, floor, and ceiling shall be tight and of not less than one-hour fire-resistive construction.

3. It shall have 2 exit doors which open directly to the outer air or through a vestibule-type exit equipped with self-closing, tight-fitting doors.

4. Exterior openings, if present, shall not be under any fire escape or any open stairway.

5. All pipes piercing the interior walls, ceiling, or floor of such room shall be tightly sealed to the walls, ceiling, or floor through which they pass.

6. Emergency remote controls to stop the action of the refrigerant compressor shall be provided and located immediately outside the machinery room.

7. An independent mechanical ventilation system shall be provided and operated continuously.

8. Emergency remote controls for the mechanical means of ventilation shall be provided and located outside the machinery room.

SBC 7818 Field Tests

1. General. Every refrigerant-containing part of every system that is erected on the premises, except compressors, condensers, evaporators, safety devices, pressure gages, control mechanisms and systems that are factory tested, shall be tested and proved tight after complete installation, and before operation.

   The high or low side of each system shall be tested and proved tight at not less than the lower of the design pressure or the setting of the pressure-relief device protecting the high or low side of the system, respectively, except as noted below in SBC 7818-1A.

   ~~(a)~~ A. Systems erected on the premises using Group 1 refrigerant and with copper tubing not exceeding 5/8 in. outside diameter may be tested by means of the refrigerant charged into the system at the saturated vapor pressure of the refrigerant at 70°F. minimum.

2. Test Medium. Oxygen or any combustible gas or combustible mixture of gases shall not be used within the system for testing.

   (a) A. The means used to build up the test pressure shall have either a pressure-limiting device or a pressure-reducing device with a pressure-relief device and a gage on the outlet side. The pressure-relief device shall be set above the test pressure but low enough to prevent permanent deformation of the system components.

3. A dated declaration of test should be provided for all systems containing 50 lb. or more of refrigerant. The declaration should give the name of the refrigerant and the field test pressure applied to the high side and the low side of the system. The declaration of test should be signed by the installer and, if an inspector is present at the tests, he should also sign the declaration. When requested, copies of this declaration shall be furnished to the enforcing authority.

SBC 7819 General Requirements

1. Signs. Each refrigerating system erected on the premises shall be provided with an easily legible permanent sign securely attached and easily accessible, indicating thereon, the name and address of the installer, the kind and total number of pounds of refrigerant required in the system for normal operations, and the field test pressure applied.

2. Metal Signs for Systems Containing More than 100 Lbs. of Refrigerant. Systems containing more than 100 lbs. of refrigerant shall be provided with metal signs having letters not less than 1/2 in. in height designating the main shutoff valves to each vessel, main steam or electrical control, remote control switch, and pressure-limiting device. On all exposed high pressure and low pressure piping in each room where installed outside the machinery room shall be signs, as specified above, with the name of the refrigerant and the letters "HP" or "LP".

3. New Sign for Changed Refrigerant. When the kind of refrigerant is changed as provided in SBC 7819-4 (substitution of refrigerant), there shall be a new sign, of the same type as specified in SBC 7819-2, indicating clearly that a substitution has been made, and stating the same information for the new refrigerant as was stated in the original.

4. Substitution of Kind of Refrigerant in a system shall not be made without the permission of the approving authority, the user, and the makers of the original equipment, and due observance of safety requirements.

5. Charging and Discharging Refrigerants. When refrigerant is added to a system, except a unit system requiring less than 6 lbs. of refrigerant it shall be charged into the low pressure side of the system. Any point on the down-stream side of the main liquid line stop valve shall be considered as part of the low pressure side when operating with said stop valve in the closed position. No service container shall be left connected to a system except while charging or withdrawing refrigerant.

6. Refrigerants withdrawn from refrigerating systems shall be transferred to approved containers only. (See Appendix 78-2). No refrigerant shall be discharged to a sewer.

7. Containers used for refrigerants withdrawn from a refrigerating system shall be carefully weighed each time they are used for this purpose, and the containers shall not be filled in excess of the permissible filling weight for such containers and such refrigerants as are prescribed in the pertinent regulations of the Interstate Commerce Commission. (See Appendix 78-2).

8. Refrigerant stored in a machinery room shall be not more than 20% of the normal refrigerant charged nor more than 300 lbs. of the refrigerant, in addition to the charge in the system and the refrigerant stored in a permanently attached receiver, and then only in approved storage containers. (See Appendix 78-2).

9. Masks or Helmets. At least two masks or helmets shall be provided at a location convenient to the machinery room when an amount of a Group 2 refrigerant exceeds 100 lbs.

   ~~(a)~~ A. Only complete helmets or masks marked as approved by the Bureau of Mines of the United States Department of the Interior and suitable for the refrigerant employed shall be used and they shall be kept in a suitable cabinet immediately outside the machinery room or other approved accessible location.

   ~~(b)~~ B. Canisters or cartridges of helmets or masks shall be renewed immediately after having been used or the seal broken and, if unused, the canisters shall be renewed not later than the date noted on the canister labels.

10. Maintenance. All refrigerating systems shall be maintained by the user in a clean condition, free from accumulations of oily dirt, waste, and other debris, and shall be kept readily accessible at all times.

11. Responsibility as to Operation of the System. It shall be the duty of the person in charge of the premises on which a refrigerating system containing more than 50 lbs. of refrigerant is installed, to place a card conspicuously as near as practicable to the refrigerant compressor giving directions for the operation of the system, including precautions to be observed in case of a breakdown or leak as follows:

~~(a)~~ A. Instruction for shutting down the system in case of emergency;

~~(b)~~ B. The name, address, and day and night telephone numbers for obtaining service;

(c) C. The name, address, and telephone number of the municipal inspection department having jurisdiction, and instructions to notify said department immediately in case of emergency.

12. Pressure Gages should be checked for accuracy prior to test and immediately after every occasion of unusually high pressure, equal to full scale reading either by comparison with master gages or by setting the pointer as determined by a dead weight pressure gage tester.

TABLE 78-A

REFRIGERANT CLASSIFICATION

REFRIGERANT	NAME	CHEMICAL FORMULA
GROUP 1		
R-11	Trichlorofluoromethane	CCl_3F
R-12	Dichlorodifluoromethane	CCl_2F_2
R-13	Chlorotrifluoromethane	$CClF_3$
R-13B1	Bromotrifluoromethane	$CBrF_3$
R-14	Tetrafluoromethane	CF_4
R-21	Dichlorofluoromethane	$CHCl_2F$
R-22	Chlorodifluoromethane	$CHClF_2$
R-30	Dichloromethane (Methylene chloride)	CH_2Cl_2
R-113	Trichlorotrifluoroethane	CCl_2FCClF_2
R-114	Dichlorotetrafluoroethane	$CClF_2CClF_2$
R-115	Chloropentafluoroethane	$CClF_2CF_3$
R-C318	Octafluorocyclobutane	C_4F_8
R-500	Dichlorodifluoromethane, 73.8% and Ethylidene Fluoride, 26.2%	CCl_2F_2/CH_3CHF_2
R-502	Chlorodifluoromethane, 48.8% and Chloropentafluoroethane, 51.2%	$CHClF_2/CClF_2CF_3$
R-744	Carbon dioxide	CO_2
GROUP 2		
R-40	Methyl chloride	CH_3Cl
R-611	Methyl formate	$HCOOCH_3$
R-717	Ammonia	NH_3
R-764	Sulphur dioxide	SO_2
GROUP 3		
R-170	Ethane	C_2H_6
R-290	Propane	C_3H_8
R-600	Butane	C_4H_{10}
R-601	Isobutane	$CH(CH_3)_3$
R-1150	Ethylene	C_2H_4

TABLE 78-B

MAXIMUM PERMISSIBLE QUANTITIES OF
GROUP 1 REFRIGERANTS FOR DIRECT SYSTEMS

REFRIGERANT	NAME	MAXIMUM QUANTITY in lb per 1000 cu ft of HUMANLY OCCUPIED SPACE*
R-11	Trichlorofluoromethane	35
R-12	Dichlorodifluoromethane	31
R-13	Chlorotrifluoromethane	27
R-13B1	Bromotrifluoromethane	38
R-14	Tetrafluoromethane	23
R-21	Dichlorofluoromethane	13
R-22	Chlorodifluoromethane	22
R-30	Dichloromethane (Methylene chloride)	6
R-113	Trichlorotrifluoroethane	24
R-114	Dichlorotetrafluoroethane	44
R-115	Chloropentafluoroethane	40
R-C318	Octafluorocyclobutane	50
R-500	Dichlorodifluoromethane, 73.8% and Ethylidene Fluoride, 26.2%	26
R-502	Chlorodifluoromethane, 48.8% and Chloropenta-fluoroethane, 51.2%	30
R-744	Carbon dioxide	11

*Volatile charge in a control shall not be considered as refrigerant.

TABLE 78-C

MAXIMUM PERMISSIBLE
QUANTITIES OF GROUP 2 REFRIGERANTS
FOR DIRECT SYSTEMS

Type of refrigerating system	MAXIMUM pounds for various occupancies			
	Institutional	Public assembly	Residential	Commercial
Sealed Absorption Systems:				
a) In public hallways or lobbies.	0	0	3	3
b) In other than public hallways or lobbies	0*	6	6	20
Self-Contained or Unit Systems:				
a) In public hallways or lobbies.	0	0	0	0
b) In other than public hallways or lobbies	0	0*	6	20

* Six pounds allowed when installed in kitchens, laboratories, and mortuaries.

TABLE 78-D

MAXIMUM PERMISSIBLE
QUANTITIES OF GROUP 2 REFRIGERANTS
FOR INDIRECT SYSTEMS

Occupancy	Column 1 Machinery Rooms Max Lb	Column 2 Class T Machinery Rooms Max Lb
Institutional	0	500
Public Assembly	0	1,000
Residential	300	No limit
Commercial	600	No limit

TABLE 78-E

MAXIMUM PERMISSIBLE
QUANTITIES OF
FLAMMABLE REFRIGERANTS

Refrigerant	Group	Name	Maximum Quantity in lb per 1,000 cu ft of Room Volume
R-40	2	Methyl chloride	10
R-611	2	Methyl formate	7
R-170	3	Ethane	2½
R-290	3	Propane	2½
R-600	3	Butane	2½
R-601	3	Isobutane	2½
R-1150	3	Ethylene	2

TABLE 78-F

MINIMUM* DESIGN PRESSURES

*SELECTION OF HIGHER DESIGN PRESSURES MAY BE REQUIRED TO SATISFY ACTUAL SHIPPING, OPERATING OR STANDBY CONDITIONS

Refrigerant	Name	Minimum Design Pressures, PSIG**		
		Low Side	High Side Water or Evap. Cooled	High Side Air Cooled
R-11	Trichlorofluoromethane	15	15	21
R-12	Dichlorodifluoromethane	85	127	169
R-13	Chlorotrifluoromethane	521	547	547
R-13B1	Bromotrifluoromethane	230	321	410
R-14	Tetrafluoromethane	544	544	544
R-21	Dichlorofluoromethane	15	29	46
R-22	Chlorodifluoromethane	144	211	278
R-30	Methylene Chloride	15	15	15
R-40	Methyl Chloride	72	112	151
R-113	Trichlorotrifluoroethane	15	15	15
R-114	Dichlorotetrafluoroethane	18	35	53
R-115	Chloropentafluoroethane	152	194	252
R-170	Ethane	616	709	709
R-290	Propane	129	188	244
R-C318	Octafluorocyclobutane	34	59	85
R-500	Dichlorodifluoromethane, 73.8% and Ethylidene Fluoride, 26.2%	102	153	203
R-502	Chlorodifluoromethane, 48.8% and Chloropenta-fluoroethane, 51.2%	162	232	302
R-600	N-Butane	23	42	61
R-601	Isobutane	39	63	88
R-611	Methyl Formate	15	15	15
R-717	Ammonia	139	215	293
R-744	Carbon Dioxide	955	1,058	1,058
R-764	Sulfur Dioxide	45	78	115
R-1150	Ethylene	732	732	732

**Corresponding to specified saturation pressure at 14.7 psia atmospheric pressure

TABLE 78-G

LENGTH OF DISCHARGE PIPING
FOR PRESSURE-RELIEF DEVICES
OF VARIOUS DISCHARGE CAPACITIES

Equiv. length of discharge pipe, ft (L)	Discharge capacity in lb of air per min (C) Standard wall iron pipe sizes, in. ½	3/4	1	1¼	1½	2	2½	3
			RELIEF DEVICE SET AT 25 PSIA (P_1)					
50	0.81	1.6	2.9	5.9	8.7	16.3	25.3	43.8
75	0.67	1.4	2.4	4.9	7.2	13.3	20.9	35.8
100	0.58	1.2	2.1	4.2	6.2	11.5	18.0	30.9
150	0.47	0.95	1.7	3.4	5.0	9.4	14.6	25.3
200	0.41	0.8	1.5	2.9	4.4	8.1	12.6	21.8
300	0.33	0.67	1.2	2.4	3.6	6.6	10.5	17.9
			RELIEF DEVICE SET AT 50 PSIA (P_1)					
50	1.6	3.3	5.9	11.9	17.4	32.5	50.6	87.6
75	1.3	2.7	4.9	9.7	14.3	26.5	41.8	71.5
100	1.2	2.3	4.2	8.4	12.3	23.0	36.0	61.7
150	0.94	1.9	3.5	6.9	10.0	18.7	29.2	50.6
200	0.81	1.6	2.9	5.9	8.7	16.3	25.3	43.7
300	0.66	1.3	2.5	4.9	7.1	13.3	21.0	35.7
			RELIEF DEVICE SET AT 75 PSIA (P_1)					
50	2.4	4.9	8.9	17.9	26.1	48.7	75.9	131.5
75	2.0	4.1	7.3	14.6	21.4	39.8	62.6	107.0
100	1.7	3.5	6.4	12.6	18.5	34.4	54.0	92.6
150	1.4	2.8	5.2	10.3	15.0	28.0	43.8	75.9
200	1.2	2.5	4.4	8.9	13.1	24.4	37.9	65.6
300	0.9	2.0	3.7	7.3	10.7	19.9	31.5	53.5
			RELIEF DEVICE SET AT 100 PSIA (P_1)					
50	3.2	6.6	11.9	23.8	34.8	65.0	101.2	175.2
75	2.7	5.4	9.7	19.4	28.6	53.0	83.6	143.0
100	2.3	4.6	8.5	16.8	24.6	45.9	72.0	123.6
150	1.9	3.8	6.9	13.7	20.0	37.4	58.4	101.2
200	1.6	3.3	5.9	11.9	17.5	32.5	50.6	87.6
300	1.3	2.7	4.9	9.7	14.2	26.5	42.0	71.4

TABLE 78-G (continued)

			RELIEF DEVICE SET AT 150 PSIA (P_1)					
50	4.9	9.9	17.9	35.7	52.3	97.5	151.8	262.8
75	4.0	8.1	14.6	29.2	42.9	79.5	125.4	214.5
100	3.5	6.9	12.7	25.2	36.9	68.9	108.0	185.4
150	2.8	5.7	10.4	20.6	30.0	56.1	87.6	151.8
200	2.4	4.9	8.9	17.8	26.2	48.7	75.9	131.4
300	1.9	4.0	7.4	14.6	21.1	39.7	63.0	107.1
			RELIEF DEVICE SET AT 200 PSIA (P_1)					
50	6.5	13.2	23.8	47.6	69.7	130.0	202.4	350.4
75	5.3	10.8	19.4	38.9	57.2	106.0	167.2	286.0
100	4.6	9.2	16.9	33.6	49.2	91.8	144.0	247.2
150	3.8	7.6	13.8	27.4	40.0	74.8	116.8	202.4
200	3.2	6.5	11.8	23.8	34.9	64.9	101.2	175.2
300	2.6	5.3	9.8	19.4	28.4	52.9	84.0	142.8
			RELIEF DEVICE SET AT 250 PSIA (P_1)					
50	8.1	16.5	29.8	59.5	87.1	162.5	253.0	437.0
75	6.7	13.5	24.3	48.6	71.5	132.5	209.0	357.5
100	5.8	11.6	21.2	42.0	61.6	114.8	180.0	309.0
150	4.7	9.5	17.3	34.3	50.0	93.5	146.0	253.0
200	4.1	8.2	14.8	29.7	43.7	81.2	126.5	219.0
300	3.3	6.7	12.3	24.3	35.5	66.2	105.0	178.5
			RELIEF DEVICE SET AT 300 PSIA (P_1)					
50	9.7	19.8	35.7	71.4	104.5	195.0	303.6	525.6
75	7.9	16.2	29.1	58.3	85.8	159.0	250.8	429.0
100	6.9	13.9	25.4	50.4	73.9	137.7	216.0	370.8
150	5.6	11.3	20.7	41.1	60.0	112.2	175.2	303.6
200	4.9	9.8	17.8	35.6	52.4	97.4	151.8	262.8
300	3.9	7.9	14.7	29.1	42.6	79.4	126.0	214.2

TABLE 78-H

MINIMUM AIR DUCT AREAS AND OPENINGS

Weight of refrigerant in system, lb	Mechanical Discharge of air, cfm	Duct area, sq ft	Open areas of windows and doors sq ft
up to 20	150	1/4	4
50	250	1/3	6
100	400	1/2	10
150	550	2/3	12 1/2
200	680	2/3	14
250	800	1	15
300	900	1	17
400	1,100	1 1/4	20
500	1,275	1 1/4	22
600	1,450	1 1/2	24
700	1,630	1 1/2	26
800	1,800	2	28
900	1,950	2	30
1,000	2,050	2	31
1,250	2,250	2 1/4	33
1,500	2,500	2 1/4	37
1,750	2,700	2 1/4	38
2,000	2,900	2 1/4	40
2,500	3,300	2 1/2	43
3,000	3,700	3	48
4,000	4,600	3 3/4	55
5,000	5,500	4 1/2	62
6,000	6,300	5	68
7,000	7,200	5 1/2	74
8,000	8,000	5 3/4	80
9,000	8,700	6 1/4	85
10,000	9,500	6 1/2	90
12,000	10,900	7	100
14,000	12,200	7 1/2	109
16,000	13,300	7 3/4	118
18,000	14,300	8	125
20,000	15,200	8 1/4	130
25,000	17,000	8 3/4	140
30,000	18,200	9	145
35,000	19,400	9 1/4	150
40,000	20,500	9 1/2	155
45,000	21,500	9 3/4	160

Figure 78-1. - Direct System

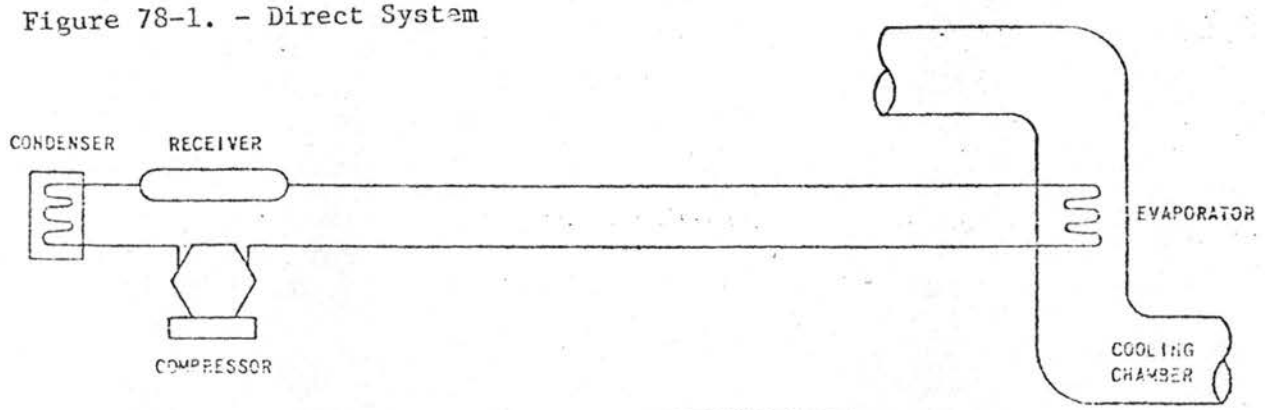

Figure 78-2. - Double Direct System

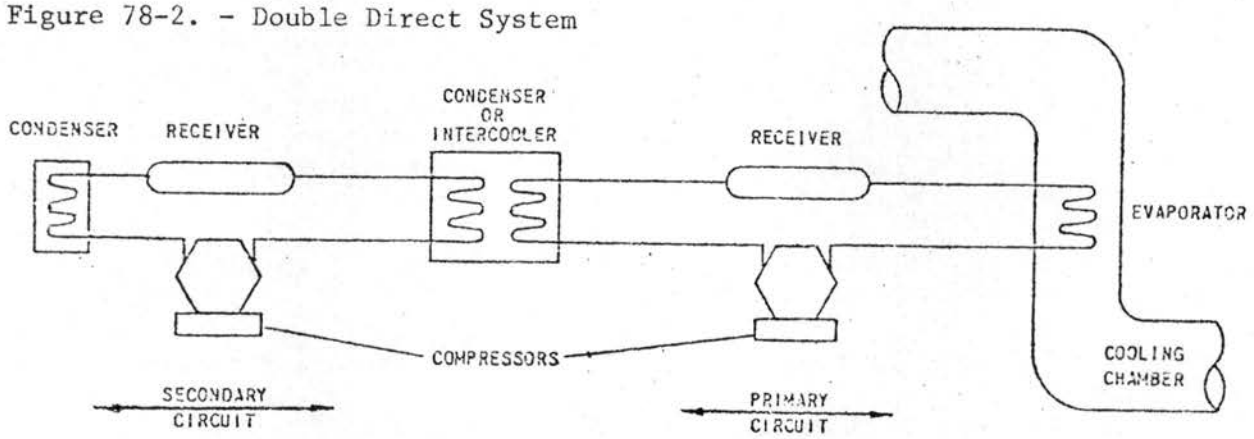

Figure 78-3 - Indirect Systems

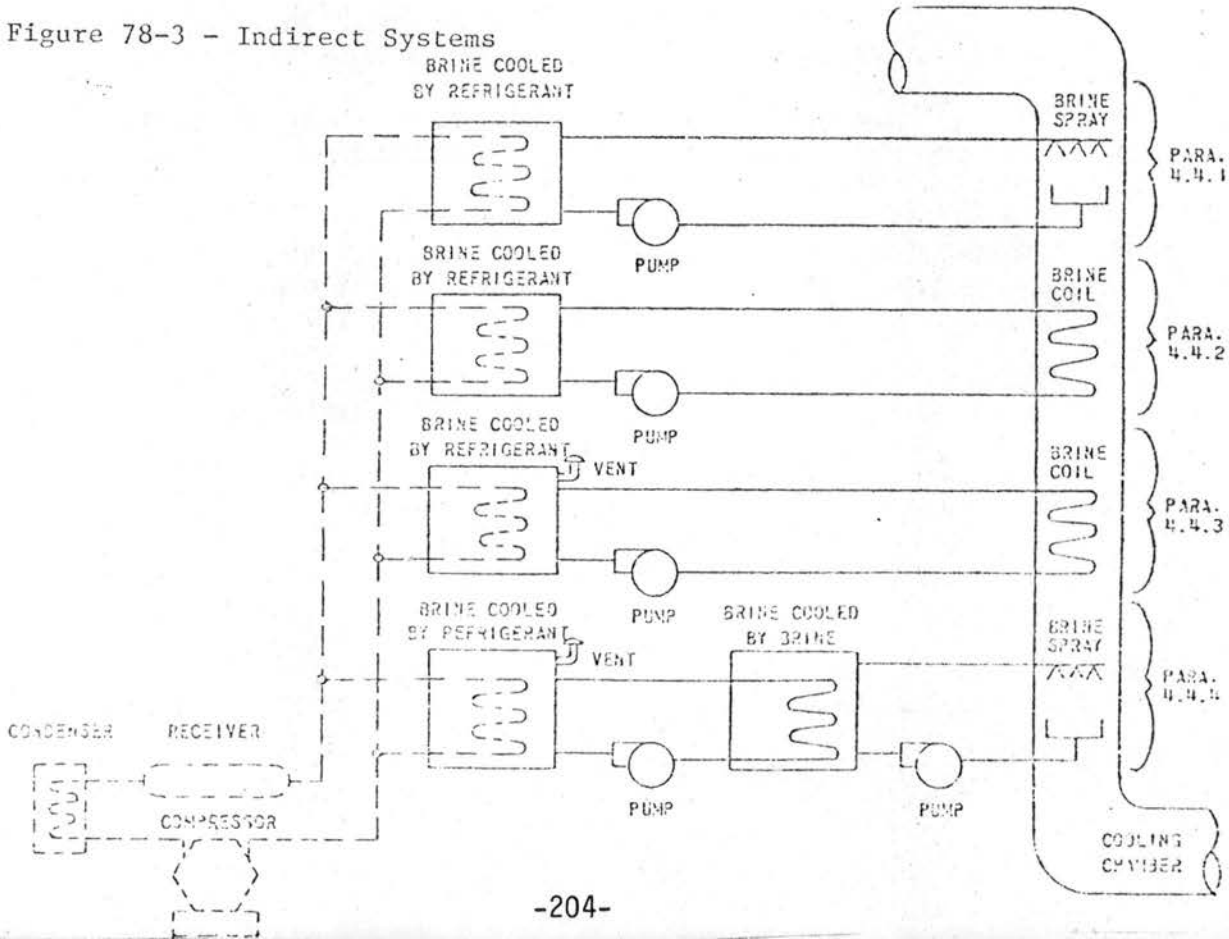

APPENDIX-78

TITLES AND SOURCES
OF REFERENCE STANDARDS

The following listing clearly identifies published standards by name of organization, standard number, year of issue and title to which reference is made in this code.

1. American National Standard Z11.7-~~1966~~ 1972, Method of Test for Flash Point by Means of the Pensky-Martens Closed Tester. (ASTM D93-~~66~~),71). [1,2]

2. Interstate Commerce Commission's Regulations for Transportation of Explosive and other Dangerous Articles by Land and Water in Rail Freight Service and by Motor Vehicle (Highway) and Water, Including Specifications for Shipping Containers; Agent T.C. George's Tariff No. 23, Effective August 3, 1969 prescribed under the Act of June 25, 1948.[3]

3. American National Standard B15.1-~~1958~~ 1972, Safety Code for Mechanical Power-Transmission Apparatus.[1]

4. American National Standard A40.8-1955, National Plumbing Code.[1]

5. American National Standard A11.1-~~1965~~ R1970, for Industrial Lighting.[1]

6. National Fire Protection Association Standard 70, 1971, National Electric Code, American National Standard C1-~~1968~~, 1971.[1,4]

7. National Fire Protection Association Standard 54, 1969, Installation of Gas Appliances and Gas Piping, American National Standard Z21.30-1969.[1,4]

8. National Fire Protection Association Standard 90A, ~~1969~~ 1972, Air Conditioning and Ventilating Systems of Other than Resistance Type.[4]

9. National Fire Protection Association Standard 90B, ~~1968~~ 1971, Residence Type Warm Air Heating and Air Conditioning Systems.[4]

10. American National Standard B31.5-1966, Code for Pressure Piping: Refrigerant Piping, (with addenda B31.5a-1968).[1]

11. American National Standard B36.10-1970, Wrought-Steel and Wrought-Iron Pipe.[1]

12. American National Standard H26.1-1967, Specifications for Seamless Copper Pipe, Standard Sizes. (ASTM B42-~~66~~), 71).[1,2]

13. American National Standard H26.1-1970, Specifications for Seamless Copper Water Tube. (ASTM B88-~~66a~~ 71). [1,2]

14. American National Standard H23.5-1967, Specifications for Seamless Copper Tube for Refrigeration Field Service. (ASTM B280-66a). [1,2]

15. ASME Boiler and Pressure Vessel Code, Section VIII 1968 Edition, known as ASME Pressure Vessel Code, Division 1. [5]

16. For reference to items not found in the body of the Code, the ASHRAE GUIDE AND DATA BOOKS, current editions, are recommended. [6]

17. National Fire Protection Association Standard 101-~~1967~~ 1970, Building Exits Code for Life Safety from Fire. [4]

18. American National Standard H27.1-1967, Specification for Seamless Red Brass Pipe, Standard Sizes. (ASTM B43-~~66~~). 70). [1,2]

19. American National Standard B79.1-1968, Number Designation of Refrigerants (ASHRAE 34-67). [1,6]

20. National Fire Protection Association Standard 37-~~1967~~ 1970, Installation and Use of Combustion Engines and Gas Turbines. [4]

Footnotes refer to Reference Sources on following page.

REFERENCE SOURCES

1. American National Standards Institute (ANSI)
   1430 Broadway
   New York, N.Y. 10016

2. American Society for Testing and Materials (ASTM)
   1916 Race Street
   Philadelphia, Pennsylvania 19103

3. Interstate Commerce Commission (ICC)
   12th Street and Constitution Avenue
   Washington, D.C. 20423

4. National Fire Protection Association (NFPA)
   60 Batterymarch Street
   Boston, Massachusetts 02110

5. American Society of Mechanical Engineers (ASME)
   United Engineering Center
   345 East 47th Street
   New York, N.Y. 10017

6. American Society of Heating, Refrigerating and
   Air-Conditioning Engineers, Inc. (ASHRAE)
   United Engineering Center
   345 East 47th Street
   New York, N.Y. 10017

ANNEX 78-I

(Relating to Chapter 78 of this Code)

METHODS OF PROVIDING AN AIR GAP AND DRAINAGE REQUIREMENTS

1. Indirect Waste Connections. No cold storage room refrigerator, cooling counter, compartment, receptacle, appurtenance, or device, which is used, designed or intended to be used for the storage or holding of food or drink, shall have any drain pipe directly connected to any soil, waste, or vent pipe. Such equipment shall be discharged to the drainage system through an airbreak.

2. Indirect Waste Piping. Indirect waste pipes from appliances, devices, or other equipment which are equipped with drainage outlets, shall be trapped but such traps need not be vented and the wastepipe need be no larger in size than the outlet or tailpiece of the fixture, appliance or equipment served, but in no case shall it be less than 1 inch in size. However, overflow pans and drip outlets need not be trapped and may be the same size as the outlet.

3. Connections from Water Distribution System. Indirect waste connections shall be provided for drains, overflows, or relief vents from the water distribution system by means of an air gap.

4. Clear Water Wastes. Cooling jackets or any similar devices which are directly connected to the potable water system and which conduct clear water only, shall be discharged to the drainage system through an air gap.

5. Installation of Indirect Waste Piping. Indirect waste piping shall be installed so as to permit ready access for flushing and cleaning, and shall meet the material and piping sizing requirements of the Plumbing Code.

6. Refrigerating Unit Condensers and Cooling Jackets. Except where potable water provided for a refrigerator condenser or cooling jacket is entirely outside the piping or tank containing a toxic refrigerant, with two separate thicknesses of metal separating the refrigerant from the potable water supply, inlet connection shall be provided with an approved check valve. If the refrigeration units contain more than 20 pounds of refrigerant, an approved pressure relief valve set to relieve at 5 pounds per square inch above maximum water at the point of installation shall be provided adjacent to and at the outlet side of the check valve.

7. Used Water Return Prohibited. Water used for cooling of equipment or other processes shall not be returned to the potable water system. Such water shall be discharged into the drainage system through an air gapped indirect waste, or other approved method of disposal.

8. Protection Against Backflow and Backsiphonage. A potable water system shall be protected against backflow and backsiphonage by providing and maintaining at each outlet:

   A. An air gap as specified herein between the potable water outlet and the flood level rim of the fixture it supplies or between the outlet and any other source of contamination.

   B. A backflow preventer device or vacuum breaker to prevent the drawing of contamination into the potable water system.

9. Minimum Required Air Gap. The minimum required air gap shall be measured vertically from the lowest end of a water outlet to the flood level rim or line of the fixture or receptacle into which it discharges. The minimum air gap shall be twice the effective opening away from a wall or similar vertical surface in which cases the minimum required air gap shall be three times the effective opening of the outlet. In no case shall the minimum required air gap be less than shown in the Minnesota Plumbing Code.

10. For Illustrations see Annex Figures 78-1 and 2.

Annex Figure 78-1

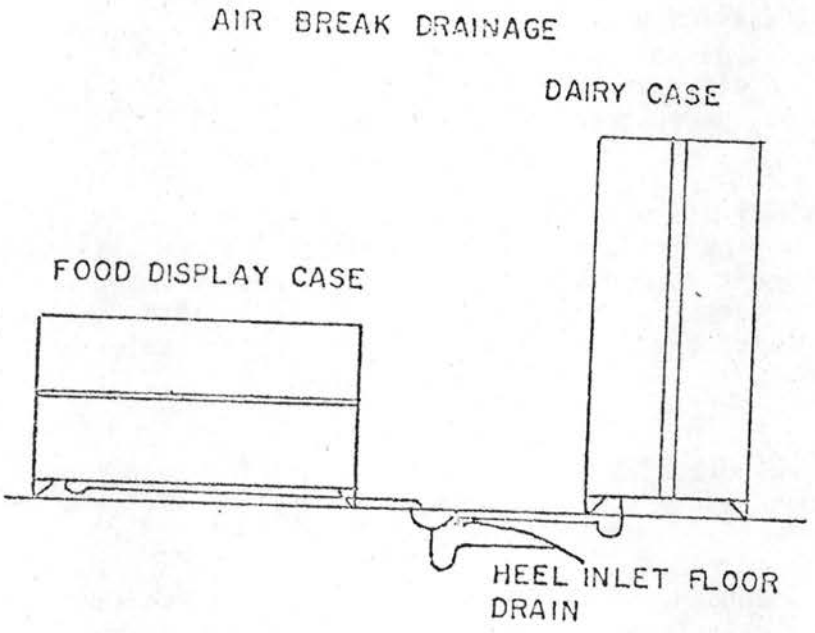

Annex Figure 78-2

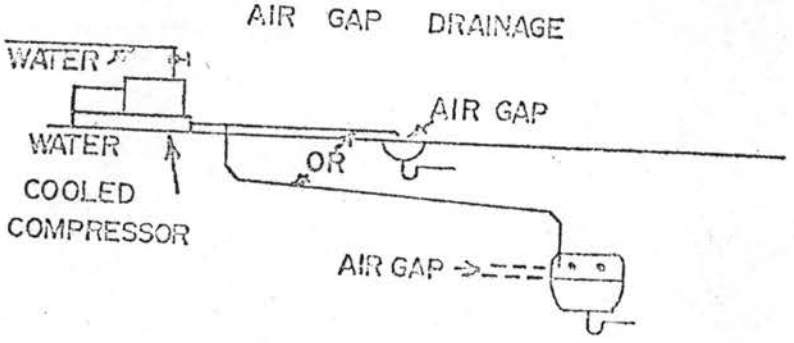

SBC 7901 is amended to read as follows: (also alphabetical changes)

SBC 7901 Gas Burners. Definitions of Gas Burners. The following terms shall mean:

CONVERSION BURNER. A gas burner accessory or device designed to supply gaseous fuel to and properly burn same within the combustion chamber of a boiler, furnace, or other device originally designed to utilize another fuel.

DIRECT GAS FIRED AIR HEATERS. A gas heating device in which gas is burned and in which the products of combustion are mixed with the air which is to be heated in passing through the heater. The term shall be taken to mean the unit and equipment from its outside air inlet to the exit where the heater air leaves the unit.

DUAL FUEL BURNING. A gas burner firing into the same combustion zone into which another fuel is utilized.

GAS BURNER. A device for the final conveyance of the gas, or a mixture of gas and air, to the combustion chamber of a boiler, furnace, device, or appliance, used in connection with a heating system and shall include gas designed appliances, conversion burners, direct gas fired air heaters and dual fuel burners.

GAS BURNER EQUIPMENT. Shall include gas burners, as above defined, vent connectors, vent flues, chimney liners, and all piping (other than supply piping from meter to appliance shutoff valve), fans, blowers, control devices and accessories connected to the burners.

GAS DESIGNED APPLIANCE. Any space heating appliance designed for the exclusive use of gaseous fuel, excepting such auxiliary heaters as may be installed in an approved masonry fireplace.

SBC 7902 is amended to read as follows:

SBC 7902 Approval of Equipment.

1. Approval of Gas Burner Required.

~~(1)~~ A. Any gas burner bearing the listing or the approved label of the American Gas Association or other nationally recognized testing laboratory may be installed without further approval, providing such gas burning appliance also meets the appropriate requirements of the applicable sections of this Code, and such other requirements as established by the administrative authority, or ~~its~~ 7210 Advisory Board as established in SBC 7210.

~~(2)~~ B. Gas burning appliances not carrying the listing or approval of the American Gas Association or other nationally recognized testing laboratory shall not be installed without prior approval of the administrative authority.

C. Used Gas Burners Procedures. No person shall install any used gas burner until he has furnished the administrative authority with a statement that said gas burner has been checked and found to be equivalent to new equipment in operation and safety, and also a letter from the purchaser acknowledging that said purchaser is buying a used gas burner.

2. Approval Requirements - General.

~~(1)~~ A. Pilots. The gas supply line to the pilot or pilots shall be connected ahead of the main burner pressure regulator and appliance shut-off valve and shall be provided with a separate cock. However, where complete shut-off type automatic pilot is provided with approved flow interrupter the pilot line shall be connected to this control and such control shall be located ahead of the main burner pressure regulator and after the appliance shut-off valve.

~~(a)~~ 1. The main burner shall light from the flame that activates the safety mechanism when this is turned down to the point where it will just actuate the safety pilot operating mechanism.

~~(b)~~ 2. Appliances having more than one combustion chamber shall be provided with individual safety pilots or with a safety supervised runner pilot.

1962

~~(c)~~ 3. The flames from each burner shall freely ignite the gas from adjacent burners when operating at the prevailing gas pressure or when the gas pressure is reduced to deliver about 1/3 the full gas rate.

~~(d)~~ 4. Electronic safety equipment shall be provided for all burners exceeding 400,000 BTU per hour input, except on multiple burner equipment where each section of 400,000 BTU per hour input or fraction thereof is supervised by an approved safety pilot.

~~(e)~~ 5. Copper or iron tubing shall not be used for supply piping within the burner heat zone to pilot burners.

~~(f)~~ 6. The construction of all safety pilots shall be such that in the event of breakage or burning out of the flame detection element they shall fail in the safe position.

~~(g)~~ 7. Pilots shall be so located that when they are extinguished they shall relight from the main burner.

8. No pilot safety equipment shall utilize a switch or electrical contacts located in the combustion chamber or zone whether the contacts are enclosed or not. Pilot safety equipment that produces electrical current or hydraulic pressure, rectifies electrical current through the flame, or detects flame by infrared or ultra-violet radiation, will be the only types approved.

9. Flame safety controls shall be used which will shut off the fuel supply within (60) sixty seconds. Where electronic flame safety equipment is required the equipment shall shut off the fuel supply within (5) five seconds.

10. Automatically controlled appliances, except domestic ranges and commercial cooking equipment having pilot input ratings of 500 BTU per hour or less, for use with liquefied petroleum gases, shall be equipped with automatic pilots of the complete shut-off type.

11. Direct spark ignition systems will be acceptable when approved by the Advisory Approval Board.

7902

~~(2)~~ B. Burners. Luminosity in burner flames will not be permitted. Burners shall be so designed and constructed that flames show no tendency to lift or blow off the burner ports.

3. Approval requirements, gas designed equipment, gravity and fan type wall heaters and room heaters.

A. Flue Gas Temperature. The flue gas temperature as taken on the outlet side of the draft hood with relief opening blocked shall not exceed 480 degrees F. above that of the air temperature surrounding the appliance. Where heaters are equipped with circulating air fans, this test shall be conducted with the fan in the off position except when both fan and limit controls are provided.

4. Approval requirements direct gas fired air heaters.

A. Pilots All burners must be positively ignited and safety supervised. No runners or flash tubes will be permitted for burner ignition unless safety supervised. Under no condition of burner or pilot stoppage shall such equipment discharge unburned gas into the air stream. Burners must ignite or shut off on safety.

B. Controls. Air sufficient for combustion must be positively proved before the pilot can be ignited or the main burner valve is allowed to open. Any reduction in this air supply below adequate safe combustion limits must shut off the fuel supply to the pilot and main burner.

The air supply to be heated must be proved before the pilot can be ignited or main burner valve is allowed to open. Provisions shall be made to shut off the fuel supply in the event of fan air failure.

When outside air closing dampers of either the manual or automatic type are used, the damper must be proved in the open position before the pilot can be ignited or the gas burner can operate.

Proper limit controls shall be provided to limit maximum air temperature within the unit. A low temperature limit control shall be installed in the discharge air stream which will shut off the outside air supply in the event the air temperature falls below 50 degrees F. Main burners which are subdivided into section or zones shall be so interlocked that the gas supply to the burner adjacent to the pilot must be served first and adjacent burners sequenced so that they positively ignite from each other in proper order.

7902

C. Control Valves. Main burner control valves shall conform to the requirements of section (SBC 7902-7C) Conversion Burners.

D. Gas Pressure Regulators. All gas pressure regulators shall conform to the requirements of section SBC 8025.

E. Combustion. Air velocity through or over the burner flames shall not adversely affect the combustion of the gas at the burner heads. A concentration of carbon monoxide of no greater percentage than .01 of one percent on an air free basis shall be permitted in the heated air stream under maximum burner conditions.

F. Ratings. Equipment shall be rated as to its capacity in cubic feet per minute of air raised 100 degrees F. in temperature at a given BTU input to the burners. Such equipment must deliver the manufacturer's rating at the established air temperature rise and BTU input.

The units shall be capable of maintaining the required discharge air temperature within plus or minus 5 degrees F. of the control setting irrespective of the outside temperature.

5. Approval Requirements for Direct-Vent Type Heaters

A. All direct venting heaters shall have a maximum allowable leakage of not more than two percent of the total flue test products, determined by the following test procedure:

1. The entire unit other than its vent cap will be considered to be the combustion chamber.

2. The heater will be set up and have all of its appurtenances in place as supplied by the manufacturer as would be done in a normal installation.

3. The vent cap will be removed and outlet will be sealed shut with a plate which will be tested to have no seal leakage.

4. A manometer opening and an opening for applying pressure will be sealed into the cap or plate.

5. Pressure will be applied to the combustion chamber to the amount of one inch of W.C. pressure.

7962

6. Leakage will then be clocked and the volume determined in C.F.H. If natural gas is used the flow will be corrected to air factor .824.

7. The flue products shall be calculated as 15 cubic feet of flue products per thousand BTU input per hour. In no case should the total leakage exceed 20 SCFH (air).

Example:

30,000 BTU Direct Vent Heater
30 x 15 = 450 CFH of Flue Gas
2% of 450 = 9 SCFH (air) allowable leakage.

6. Approval Requirements - Gas Fired Roof Top and Outdoor Units

A. In addition to the provisions contained in American National Standards Institute requirements"Gas Fired Duct Furnaces" (ANSI Z-21.34), gas fired roof top and outdoor units shall conform to the requirements of this section.

1. Appliances shall be designed for outdoor installations and shall be designed to withstand the atmospheric and climatic conditions of Minnesota.

2. All access, locks, screws, and bolts shall be of corrosion and rust resistant material.

3. The construction shall be so designed that combustion air for the gas burner shall come directly from the air surrounding the unit without first having passed over other mechanical equipment.

4. All valves, controls, relays and any other equipment necessary for the operation of the unit shall be certified to operate at a temperature of minus 40 degrees F.

5. If mechanical venting or forced com bustion air is used, the venting equipment shall be interlocked and proven before the burner can operate. The interlock shall prove actual air flow.

6. Pilots shall incorporate an automatic reignition device or the reignition device may be constructed so that it can be operated by the customer from the interior of the building.

7912

7. Approval Requirements - for Conversion Burners and Dual Fuel Burners with Inputs 1,000,000 BTU and Over.

~~(1)~~ A. Pilots. Automatically lighted pilots or constant burning pilots may be used. Burners having a constant burning pilot shall be safety supervised to provide 100% (pilot and main burner) shut-off on flame failure.

~~(a)~~ 1. A flame safeguard so constructed and installed that no fuel can flow to the main burner or burners or burner group unless satisfactory ignition is assured, shall be employed at each burner or group of burners operating as a unit. Fuel to the main burners shall be automatically shut off in case of flame failure at point of supervision.

~~(b)~~ 2. The response time of the flame safeguard to de-energize the main fuel shut-off device on flame failure shall not exceed 5 seconds. Pilot supervision by such flame safeguard shall be only at the point where the flame will effectively ignite the burner or burners. The circuit and devices shall be arranged so that the fuel will be shut off in case of electrical failure.

~~(c)~~ 3. Electric ignition systems on gas operation shall ignite only a pilot. The input to the pilot shall not exceed 2% of the maximum input to the main burner as fired. If ignition of the pilot is not obtained in 30 seconds, the fuel shall be turned off automatically. Continuous ignition spark is prohibited.

~~(d)~~ 4. Pilots shall effect immediate ignition of the fuel and the main burner even when the gas supply to the pilots is reduced to a point where the flame is just sufficient to actuate or energize the flame-detection device.

~~(e)~~ 5. All pilot burners and flame safeguard units shall be so located as to assure proper ignition of all burners or ports, readily accessible for service and maintenance, and so fixed that they must be readily returned to the original position after removal for servicing. Pilot burners shall be so placed that they can be safely lighted manually if required.

7902

~~(2)~~ B. Automatic or Manually Lit.

~~(a)~~ 1. An automatically lighted installation shall automatically recycle to meet control requirements. Such installation shall have necessary controls and devices to automatically ignite the safety pilot and open the re-cycling safety shut-off valve to permit ignition of the main burner from the safety pilot when fuel input is required and to automatically shut off all gas to pilot and main burners when fuel input is not required.

~~(b)~~ 2. Burners which are manually lit are those which require a manual starting sequence by closing a push button start switch to open the pilot solenoid valve; the pilot being ignited by manual torch or from an electric spark ignition system which is energized with the same push button start switch. The main burner is then ignited from the safety pilot by opening the manual firing valve after having opened the manual reset safety shut-off valve.

~~(3)~~ C. Control Valves.

~~(a)~~ 1. On burners with maximum input ratings exceeding 1,000,000 BTU per hour a fuel input control valve and a safety shut-off valve shall be used. These shall be separate and independent valves.

~~(b)~~ 2. The positioning of the gas valves shall be such that the safety shut-off valve is on the inlet side of the fuel input control valve except by special approval of the administrative authority.

~~(c)~~ 3. Main burner safety shut-off valves shall be of an approved type. These valves shall be capable of opening only when energized and shall be so constructed that they may not be readily blocked in the open position.

~~(d)~~ 4. Electrically operated safety shut-off valves shall not depend upon the closing of an electrical circuit to shut off the fuel supply.

~~(e)~~ 5. Means shall be provided for any easy sensitive test for gas tightness of the safety shut-off and fuel input control valve when in the closed position.

~~(f)~~ 6. The safety shut-off valve shall be an approved quick closing type.

7902

~~(4)~~ D. Safety Shut Off Valve Switch.

1. The burner shall have either of the following as part of the starting sequence.

a. Automatic installations shall have a switch in the safety shut-off valve which will prove that the valve is 100% closed. This non-adjustable switch will be interlocked into the system to prevent any starting procedure unless proven closed. This switch will close when the valve has had an over travel of the valve seat.

b. Manual installations shall be equipped with an electrical limit switch which will close the firing valve before the safety pilot can be ignited. The starting switch shall consist of a momentary contact pushbutton "start-stop" switch so arranged as to prevent recycling of pilot following action of any safety device to shut off the fuel.

~~(5)~~ E. Purge Cycles.

~~(a)~~ 1. On automatic recycling ~~jobs~~ installations where intermittant or interrupted pilots are used and all combustion air is provided for by forced and/or induced draft fans, a purge time of approximately one minute shall be provided in the starting sequence and accomplished before the pilot valve is opened. Air flow must be established and proven before the purge timer is energized to begin its timing cycle. A re-purge must also be accomplished before re-ignition can be attempted after a flame failure has been detected.

~~(b)~~ 2. On manually lighted installations the combustion chamber and flue gas passages shall be purged before igniting pilots in accordance with instructions posted by the installer.

~~(c)~~ 3. Air openings into the burner shall be provided of sufficient area to provide an adequate amount of air for complete combustion under minimum draft conditions and at the maximum rate of firing. The air shall be introduced in a manner so as to assure thorough mixing of the fuel and air in order to complete the combustion within the space provided.

~~(d)~~ 4. For forced or induced draft operation, limiting devices shall be provided to shut off the fuel in the event of air failure.

~~(e)~~ 5. The purge cycle shall not begin until the interlock as required in (SBC 7902-7D-1) is proven closed.

1962

~~(6)~~ F. Main Burners. All metallic parts of the burners exposed to the heat of the furnace shall be constructed of an alloy suitable for continuous operation at existing temperatures, or protected from furnace radiation when not in use.

~~(a)~~ 1. Gas burners shall be of the inshot type. The turndown ratio shall be such as to assure positive and safe ignition and complete stability during operation of main flames on all burners or ports throughout the required range of operation.

~~(7)~~ G. Combustion Control. Installations primarily used for space heating shall be equipped with adequate and proper devices to control the use of gas input demand according to building requirements. Control systems shall be designed and installed to assure safe, stable and accepted proper standards of combustion and efficiency throughout the entire range of operation. Paragraphs 1 to 5 hereof set forth minimum standards within input demand classifications of types of control systems but they shall not preclude the use of more extensive equipment to obtain required or better results for specific jobs.

~~(a)~~ 1. For fuel inputs not exceeding 3,000,000 BTU per hour the combustion control system may be the "on-off" type which shall consist of a pressure or heat actuated controller to operate an approved slow opening "on-off" gas input control valve properly interlocked with air louvers or dampers where such are used.

~~(b)~~ 2. For fuel inputs not exceeding 5,000,000 BTU per hour the combustion control system may be "high-low-off" or "on-off" (with timed low fire start) type which shall consist of a pressure or heat actuated controller to operate an approved "high-low-off" or "on-off" (with timed low fire start) fuel input control valve or a group of valves to accomplish the sequence of operation properly interlocked with air louvers and dampers where such are used. This valve or valves shall be separate and in addition to the safety valve. Ignition of main flame shall be accomplished on low fire setting with the low fire setting maintained for such time as draft conditions are established to meet high fire requirements.

7902

~~(e)~~ 3. For fuel inputs exceeding 5,000,000 BTU per hour the combustion control system shall be the "modulating" type which shall consist of properly interlocked draft control dampers and fuel input control valves to operate in conjunction with each other to maintain proper ratio of fuel and air in accordance with load requirements. The fuel input control valve shall be separate and in addition to the safety valve. Ignition of main flame shall be accomplished on low fire setting maintained for such time as draft conditions are established to meet high fire requirements.

4 Modulating controls that are inter-connected by mechanical linkage to inlet air louvers ~~of natural-draft-burners~~, shall have this linkage so arranged that the louvers will go to the open position in the event of failure of the linkage, provided such failure could change the fuel-air ratio.

~~(d)~~ 5. The manufacturer or authorized distributor shall file with the adminsitrative authority drawings showing electric wirings, gas piping of the gas burner and controls, method of mounting burner and installation and operating instructions.

~~(8)~~ H. Dual Fuel Burning. In addition to the requirements of SBC 7902 - ~~7~~-8 7A through ~~8~~C, gas burners to be installed in conjunction with other combustion equipment shall conform to the following requirements.

~~(a)~~ 1. Controls may be common to both fuels or may be independent. Transfer from one fuel to the other shall be by a manual interlock switching system to prevent the gas and other fuel being used simultaneously except by special permission of the administrative authority. The transfer switch shall have a center off position and will not pass through the center off position without stopping in the off position.

~~(b)~~ 2. Proper protection of the gas and other combustion equipment shall be provided from the effects of each other.

SBC 7903 is amended to read as follows:

SBC 7903 Installation Requirements. General. Requirements for all Gas Burners.

~~(1)~~ 1. Piping. All gas piping installed for gas burners shall be in accordance with the requirements of ~~Chapter 85 of this code.~~ SBC 8000 through SBC 8033.

~~(a)~~ A. Manual Main Shutoff Valves. When a complete shut-off type automatic pilot system is not utilized, a manual main shutoff valve shall be provided ahead of all controls except the manual pilot gas valve.

When a complete shutoff type automatic pilot system is utilized, a manual main shutoff valve shall be provided ahead of all controls.

A union connection shall be provided downstream from the manual main shutoff valve to permit removal of the controls.

~~(2)~~ 2. Combustion Air. Combustion air for all gas burners shall be in accordance with the requirements of ~~Chapter 75 of this code~~ SBC 7722.

~~(3)~~ 3. Venting. The venting of all gas burners shall be in accordance with ~~section~~ SBC ~~7103~~ ~~7904~~ ~~of this chapter and Chapter 75 of this code.~~ ~~SBC~~ 7400 through 7409.

~~(4)~~ 4. Accessibility for Service.

~~(a)~~ A. Every gas appliance shall be located with respect to building construction and other equipment so as to permit access to the appliance. Sufficient clearance shall be maintained to permit cleaning of heating surfaces; the replacement of filter, blowers, motors, burners, controls, and vent connections; the lubrication of moving parts where required; and the adjustment and cleaning of burners and pilots.

~~(b)~~ B. For attic installation the passage way and servicing area adjacent to the appliance shall be floored.

~~(c)~~ C. Appliances listed for outdoor installations may be installed without protection in accordance with the provision of their listing and shall be accessible for servicing.

1903

~~(5)~~ 5. Limiting Devices. All boilers and furnaces shall be provided with automatic safety devices arranged to prevent excessive steam pressures, water temperatures, or air temperatures by shutting off the fuel supply.

~~(a)~~ A. Steam boilers shall be provided with means to guard against firing a dry boiler or one in which the water is dangerously low.

~~(b)~~ B. Limiting devices shall not depend upon the closing of an electrical circuit to shut off the fuel supply.

~~(c)~~ C. All limiting devices shall shut off fuel to all main burners.

~~(d)~~ D. Shutoff valves shall not be installed in the piping between the boiler and pressure or water temperature limiting devices.

~~(6)~~ 6. Electric Wiring. Electric wiring and equipment in connection with gas burners shall be installed in accordance with the provisions of this Code.

~~(7)~~ 7. Installation in Residential Garages.

~~(a)~~ A. Gas appliances may be installed on the floor of a residential garage provided a door of the garage opens to an adjacent ground or driveway level that is at or below the level of the garage floor. When this condition does not exist, appliances shall be installed so that the burners and pilots are at least 18 inches above the floor.

~~(b)~~ B. Gas appliances shall be located or reasonably protected, so that they are not subject to physical damage by a moving vehicle.

~~(8)~~ 8. Installation in Commercial Garages.

~~(a)~~ A. Floor mounted heaters in commercial garages for more than three motor vehicles shall be installed as follows:

~~(1)~~ 1. Heaters may be located in a room separated from other parts of the garage by construction having at least a one-hour fire resistance rating. This room shall not be used for combustible storage and shall have no direct access from the garage storage or repair areas. All air for combustion purposes entering such a room shall be from outside of the building.

7963

~~(2)~~ 2. Overhead heaters shall be installed at least 8 feet above the floor.

(3) 3. ~~Sealed-combustion-system~~ Direct vent heaters may be located within a garage. They shall be protected against physical damage.

~~(9)~~ 9. Installation in Aircraft Hangars. Heaters in aircraft hangars shall be installed in accordance with National FireProtection Association, Standard on Aircraft hangars NFPA No. 409, Chapter 11, Hangar Services and Utilities - Section 1101 Heating.

10. Conversion Burners. Inputs Not Exceeding 400,000 BTU Per Hour. Installation of conversion burners shall conform to American Standard Installation of Domestic Gas Conversion Burners, ~~ASA-Z21.8~~ ANSI Z-21.8 , and to the applicable sections of this code.

A. Preparation of Existing Heating Appliance. Thoroughly clean the ash pit, fuel passages and combustion chamber of the furnace or boiler, removing all adhering tars, scale or dirt.

~~(1)~~ 1. If cracks or fractures, especially above the grate level, are found in any of the castings after they have been cleaned, the castings shall be replaced. Cracks or fractures in other materials shall be repaired or the parts replaced and the appliance made gas tight as shown by smoke bomb test or equivalent.

~~(2)~~ 2. All joints between sections shall be properly cemented and the ash pit tightly grouted to the floor. Openings for grate shaker bars, cracks around door frames, and cracks such as under clinker doors, shall be tightly sealed with furnace cement.

~~(3)~~ 3. Firing door catches shall be filed or otherwise altered so that the firing door will open easily to relieve pressure. Positive latches shall be removed from the appliance and replaced by either light sheet metal catches, a spring placed on the hinge pin to keep the door closed or an equivalent arrangement which will permit the door to open and relieve any excessive pressure which may occur in the furnace. Latches on firing doors shall hold such firing doors close to the frame without exposing or forming any cracks.

7913

~~(4)~~ 4. Where the burner is installed at approximately grate level and the furnace is lined with a refractory material, this material shall be removed down to the level of the burner except where the refractory material forms the only wall between the combustion chamber and the furnace front shield.

~~(5)~~ 5. When inshot type conversion burners are installed in dry base boilers or gravity warm air furnaces the ash pit shall be lined for protection in accordance with the manufacturer's installation instructions, or as follows.

~~(a)~~ a. With at least 2 inches of insulating fire brick which covers the ashpit bottom.

~~(b)~~ b. With at least 2 inches of insulating fire brick along the side walls of the ash pit up to the level of the water backed surface of a boiler or sufficiently high to protect the grate lugs of a furnace.

~~(6)~~ 6. Where inshot type conversion burners are installed, the floor areas of a combustion chamber shall be in accordance with the burner manufacturer's instructions or recommendations; however, in the absence of such instructions it shall be at least 1 1/2 sq. in. per 1,000 BTU per hour input of the burner.

~~(7)~~ 7. The water column and gauge glass on a steam boiler shall be clean, with the water level plainly visible. The connections from gauge glass to boiler shall be free and unobstructed.

~~(8)~~ 8. The chimney shall be examined and thoroughly cleaned, if necessary, before installation is made.

B. Installation of Burner and Controls. The installation of gas conversion burners having inputs not exceeding 400,000 BTU per hour shall be installed in accordance with the following provisions.

~~(1)~~ 1. General. Gas conversion burners of all types shall consist of factory assembled and factory inspected units supplied with an automatic gas control valve, gas pressure regulator, manual main line shut-off valve, pilot shut-off valve, tubing or piping for pilot gas supply, tubing for bleed line from diaphragm valves when employed, and any automatic pilot wiring as regular

7903

equipment, and accompanied by complete and comprehensive installation and operation instructions. It shall be ascertained by close and careful inspection that parts of the unit are satisfactory and in proper working order and have not been bent, broken or otherwise damaged as the result of shipping or transporting the unit to the place of installation. It shall be determined that the unit has been manufactured for use with the gas and electricity to which it is to be connected. Installation of a burner shall be so planned that it and all its controls will be readily accessible for inspection, cleaning, adjustment and repairs.

~~(a)~~ a. The burner shall be solidly supported on fireproof material both front and rear and shall be level in both directions. No portion of the combustion air door opening of the burner shall be closed off by the seal covering the ash pit opening. Care shall be exercised when installing the burner to avoid undue strain on, or distortion of duct, or other components which would impair the fit, alignment or mechanical functioning of parts such as pilots, position of orifices with respect to venturi, combustion air door, etc.

~~(b)~~ b. For drilled port or multi-jet upshot type conversion burners installed in boilers, the burner ports shall be at least one inch (1") above grate level. For single port upshot burners the above dimension shall apply to the bottom of the flame spreader.

~~(c)~~ c. For drilled port of multi-jet upshot type conversion burners installed in warm air furnaces, the burner ports shall be set above the grate level but not more than 1/3 the distance between the grate and the bottom level of the firing door. For single port upshot burners the above dimension shall apply to the bottom of the flame spreader.

~~(d)~~ d. Burners shall be so placed with respect to the firebox dimensions as to uniformly distribute the heat over as much of the available heating surface as possible.

~~(e)~~ e. Where the burner is appreciably shorter than the firebox, it shall be placed at the end of the firebox which will insure the longest flue travel. In some instances, it may be necessary to install air directing baffles to insure proper distribution of combustion air within the flame zone and to thereby prevent floating flame conditions on one side of the burner.

~~(f)~~ f. Firing door (fuel door) type burners shall be installed in accordance with the burner manufacturer's instructions. The burner parts shall be located with respect to the side walls of the combustion chamber so as to provide the longest travel for the products of combustion and to avoid direct flame impingement.

~~(g)~~ g. After the supply line has been connected to the burner, close the space between the ash pit opening and the air duct (and/or door shield) in a permanent manner which will preclude entrance of combustion air except through the air duct. The use of sheet metal or hard asbestos board neatly fitted will facilitate servicing at a later date.

~~(h)~~ h. All gas burners installed in the revertible flue type of equipment exceeding a 12 inch downdraft shall be provided with a complete shut-off type automatic pilot unless equipped with adequate bleeder connections.

~~(2)~~ 2. Union for Connecting Burner to House Piping. A union shall be installed in the gas line downstream from the manual main shut-off valve.

~~(3)~~ 3. Automatic Main Gas-Control Valves. The automatic main gas-control valve shall be installed according to instructions furnished by the burner manufacturer.

~~(4)~~ 4. Gas Pressure Regulators. An approved gas pressure regulator shall be installed on all conversion burner installations. When automatic recycling ignition is used, the regulator shall not be vented into the combustion chamber. Regulators shall be installed in accordance with ~~this code.~~ SBC 8025.

~~(5)~~ 5. Radiants and Flame Spreaders. All radiants or other refractory material, and flame spreaders employed on conversion burners shall be installed in accordance with the manufacturer's instructions.

7903

11. Conversion Burners - Inputs Exceeding 400,000 BTU Per Hour. Gas burners shall be in accordance with SBC 7901 and SBC 7902 and with the requirements of the administrative authority.

12. Dual Fuel Burners. Dual fuel burners shall be in accordance with SBC 7901 and also with this section.

~~(1)~~ A. Gas burners shall be of the inshot type and shall be installed to fire directly into the combustion chamber. Angle or corner installations will not be permitted without special permission from the office of the administrative authority.

~~(2)~~ B. The installer shall be responsible for the proper functioning of both the gas equipment and the existing combustion facilities.

~~(3)~~ C. Proper protection of the gas and other combustion equipment shall be provided from the effects of each other.

~~(4)~~ D. Controls may be common to both fuels or may be independent. Transfer from one fuel to the other shall be by a manual interlock system to prevent the gas and other fuel being used simultaneously. ~~SBC-7902(8)(d).~~ SBC 7902-7H[redacted].

~~(5)~~ E. Where it is necessary that both fuels are to be used simultaneously, special approval must be obtained from the administrative authority.

~~(6)~~ F. The installer shall file with the administrative authority drawings showing electric wiring, gas piping, method of mounting burner and operating instructions.

13. Installation Requirements. Central Heating Boilers and Furnaces.

~~(1) Manual Main Shutoff Valves. When a complete shut-off type automatic pilot system is not utilized, a manual main shutoff valve shall be provided ahead of all controls except the manual pilot gas valve.~~

~~When a complete shutoff type automatic pilot system is utilized, a manual main shutoff valve shall be provided ahead of all controls.~~

~~A union connection shall be provided downstream from the manual main shutoff valve to permit removal of the controls.~~

7903

~~(2)-Clearance.~~

~~(a)-Central-heating-boilers-and-furnaces-installed-in-rooms which-are-large-in-comparison-with-the-size-of-the-appliance,-shall-be-installed-with-clearances-not-less than-specified-in-Table-1-except-as-provided-in-(1), (2)-and-(3)-following.~~

~~(1)-Central-heating-furnaces-and-boilers-listed-for installation-at-lesser-clearances-than-specified in-Table-1-may-be-installed-in-accordance-with-their listing-and-the-manufacturer's-instructions.~~

~~(2)-Central-heating-furnaces-and-boilers-listed-for-installation-at-greater-clearances-than-specified-in-Table-1,-shall-be-installed-in-accordance-with their-listing-and-the-manufacturer's-instructions.~~

~~(3)-Central-heating-furnaces-and-boilers-may-be installed-in-rooms,-but-not-in-confined-spaces such-as-alcoves-and-closets,-with-reduced-clearances-to-combustible-material-provided-the-combustible-material-or-the-appliance-is-protected-as described-in-Table-2.~~

~~(b)-Central-heating-furnaces-and-boilers-may-be-installed in-rooms,-but-not-in-confined-spaces-such-as-alcoves and-closets-unless-thay-have-been-specifically-listed-for-such-installation-and-are-installed-in-accordance with-their-listing.--The-installation-clearances-for furnaces-and-boilers-in-confined-spaces-shall-not-be reduced-by-the-protection-methods-described-in-Table-2.~~

~~When-the-plenum-is-adjacent-to-plaster-on-metal-lath or-non-combustible-material-attached-to-combustible material-the-clearance-shall-be-measured-to-the surface-of-the-plaster-or-other-noncombustible-finish when-the-clearance-specified-is-2-inches-or-less.~~

~~The-clearance-to-these-appliances-shall-not-interfere with-the-requirements-for-combustion-air,-draft-hood clearance-and-relief,-and-accessibility-for-servicing.~~

A. Clearance. Central heating boilers and furnaces shall be installed in accordance with their listing and manufacturer's instructions. (See Table 79-A and B.)

PRINT TABLES

1903

~~(3)~~ B. Erection and Mounting. A central heating boiler or furnace shall be erected in accordance with the manufacturer's instructions and shall be installed on a floor of fire-resistive construction with noncombustible flooring and surface finish and with no combustible material against the underside therof or on fire-resistive slabs or arches having no combustible material against the underside therof unless listed for installation on a combustible floor, or the floor is protected in an approved manner.

~~(4)~~ C. Plenum Chambers and Air Ducts.

~~(a)~~ 1. A plenum chamber supplied as a part of a furnace shall be installed in accordance with the manufacturer's instructions.

~~(b)~~ 2. When a plenum chamber is not supplied with the furnace, any fabrication and installation instructions provided by the manufacturer shall be followed. The method of connecting supply and return ducts shall facilitate proper circulation of air.

~~(c)~~ 3. When the furnace is installed within a confined space, the air circulated by the furnace shall be handled by ducts which are sealed to the furnace casing and are entirely separate from the means provided for supplying combustion and ventilation air.

~~(5)~~ D. Refrigeration Coils.

~~(a)~~ 1. A refrigeration coil shall not be installed in conjunction with a forced air furnace when circulation of cooled air is provided by the furnace blower unless the blower has sufficient capacity to overcome the external static resistance imposed by the duct system and cooling coil for the air required for heating or cooling, whichever is greater.

~~(b)~~ 2. Furnaces shall not be located upstream from cooling units unless the cooling unit is designed or equipped so as not to develop excessive temperature or pressure.

~~(c)~~ 3. Refrigeration coils shall be installed in parallel with or on the downstream side of central furnaces to avoid condensation in the heating element unless the furnace has been specifically listed for downstream installation. With a parallel flow arrangement, the dampers or other means used to control flow of air shall be sufficiently tight to prevent any circulation of cooled air through the furnace.

7903

~~(d)~~ 4. Adequate means shall be provided for disposal of condensate and to prevent dripping of condensate on the heating element.

~~(6)~~ E. Cooling Units Used with Heating Boilers.

~~(a)~~ 1. Boilers, when used in conjunction with refrigeration systems, shall be installed so that the chilled medium is piped in parallel with the heating boiler with appropriate valves to prevent the chilled medium from entering the heating boiler.

~~(b)~~ 2. When hot water heating boilers are connected to heating coils located in air handling units where they may be exposed to refrigerated air circulation, such boiler piping systems shall be equipped with flow control valves or other automatic means to prevent gravity circulation of the boiler water during the cooling cycle.

14. Installation Requirements. Room Heaters.

~~(1)~~ A. Installation in Sleeping Quarters. Room heaters shall not be installed in bedrooms or sleeping quarters when such heaters depend upon air for combustion from the room in which they are located.

~~(2)~~ B. Clearance. A room heater shall be placed so as not to cause a hazard to walls, floors, curtains, furniture, doors when open, etc., and to the free movements of persons within the room. Listed room heaters shall be installed with clearances not less than specified in Table ~~3~~ 79-C, except that appliances listed for installation at lesser clearances may be installed in accordance with their listings. In no case shall the clearances be such as to interfere with the requirements of combustion air and accessibility. Unlisted room heaters shall be installed with clearances from combustible material not less than the following:

F-K 11

~~(a)~~ 1. Circulating Type. Room heaters having an outer jacket surrounding the combustion chamber, arranged with openings at top and bottom so that air circulates between the inner and outer jacket, and without openings in the outer jacket to permit direct radiation, shall have clearance at sides and rear of not less than 12 inches.

1963

~~(b)~~ 2. Radiating Type. Room heaters other than those described above as of circulating type shall have clearance at sides and rear of not less than 18 inches; except that heaters which make use of metal, asbestos, or ceramic material to direct radiation to the front of the appliance shall have a clearance of 36 inches in front, and if constructed with a double back of metal or ceramic may be installed with a clearance of 18 inches at sides and 12 inches at rear. Combustible floors under unlisted room heaters shall be protected in an approved manner.

~~(3)~~ C. Wall Type Room Heaters. Wall type room heaters shall not be installed in or attached to walls of combustible material unless listed for such installation.

~~(4)~~ D. Air for Combustion and Ventilation. It shall be the installers responsibility to make provisions for adequate air for combustion and draft hood dilution.

15. Installation Requirements. Wall Furnaces.

~~(1)~~ A. Wall furnaces shall be installed in accordance with their listing and the manufacturer's instructions. They may be installed in or attached to combustible material.

~~(2)~~ B. Vented wall furnaces connected to a Type BW gas vent system listed only for single story shall be installed only in single story buildings or the top story of multi-story buildings. Vented wall furnaces connected to a Type BW gas vent system listed for installation in multi-story buildings may be installed in single story buildings. Type BW gas vents shall be attached directly to a solid header plate which may be an integral part of the vented wall furnace, and which serves as a fire stop at that point. The stud space in which the vented wall furnace is installed shall be ventilated at the ceiling level by installation of the ceiling plate spacers furnished with the gas vent. (See Figure 79-2 for Type BW gas vent installation requirements.)

~~(3)~~ C. ~~Sealed-combustion-system~~ Direct Vent wall furnaces shall be installed with the vent-air intake terminal in the outside atmosphere. The thickness of the walls on which the appliance is mounted shall be within the range of wall thickness marked on the appliance and covered in the manufacturer's instructions for installation.

~~(4)~~ D. Panels, grilles, and access doors which must be removed for normal servicing operations shall not be attached to the building.

1963

~~(5)~~ E. Location. Wall furnaces shall be located so as not to cause a hazard to walls, floors, curtains, furniture, or doors. Wall furnaces installed between bathrooms and adjoining rooms shall not circulate air from bathrooms to other parts of the building.

~~(6)~~ F. Manual Main Shutoff Valve. A manual main shut-off valve shall be installed ahead of all controls including the pilot gas valve.

~~(7)~~ G. Combustion and Circulating Air. Adequate combustion and circulating air shall be provided.

16. Installation Requirements. Floor Furnaces.

~~(1)~~ A. Installation. Floor furnaces may be installed in combustible floors.

~~(2)~~ B. Manual Main Shutoff Valve. A separate manual main shutoff valve shall be provided ahead of all controls and a union connection shall be provided downstream from this valve to permit removal of the controls or the floor furnace.

~~(3)~~ C. Combustion and Circulating Air. Adequate combustion and circulating air shall be provided.

~~(4)~~ D. Placement. The following requirements apply to furnaces to serve one story:

~~(a)~~ 1. Floor furnaces shall not be installed in the floor of any aisle or passageway of any auditorium, public hall, or place of assembly, or in an exitway from any such room or space.

~~(b)~~ 2. Walls and Corners. The grille of a floor furnace with a horizontal warm air outlet shall not be placed closer than 6 inches to the nearest wall. A distance of at least 15 inches from two adjoining sides of the floor grille to walls shall be provided to eliminate the necessity of occupants walking over the warm air discharge from grilles. Wall-register models shall not be placed closer than 6 inches to a corner.

~~(c)~~ 3. Draperies. The furnaces shall be placed so that a door drapery, or similar object, cannot be nearer than 12 inches to any portion of the register of the furnace.

~~(d)~~ 4. Central Location. The furnace should be installed in a central location favoring slightly the sides exposed to the prevailing winter winds.

1903

~~(5)~~ E. Bracing. The space provided for the furnace shall be framed with doubled joists and with headers not lighter than the joists.

~~(6)~~ F. Support. Means shall be provided to support the furnace when the floor grille is removed.

~~(7)~~ G. Clearance. The lowest portion of the floor furnace shall have at least a 6 inch clearance from the general ground level, except that when the lower 6 inch portion of the floor furnace is sealed by the manufacturer to prevent entrance of water, the clearance may be reduced to not less than 2 inches. When these clearances are not present, the ground below and to the sides shall be excavated to form a "basin-like" pit under the furnace so that the required clearance is provided beneath the lowest portion of the furnace. A 12 inch clearance shall be provided on all sides except the control side, which shall have an 18 inch clearance.

~~(8)~~ H. Access. The space in which any floor furnace is installed shall be accessible by an opening in the foundation not less than 24 by 18 inches or a trap door, not less than 24 by 24 inches in any cross section thereof, and a passageway not less than 24 by 18 inches in any cross section thereof. The serving gas supplier should be consulted with reference to the access facilities for servicing when it provides service.

7963

~~(9)~~ J. Seepage Pan. When the excavation exceeds 12 inches in depth or water seepage is likely to collect, a watertight copper pan, concrete pit or other suitable material shall be used, unless adequate drainage is provided or the equipment is sealed by the manufacturer to meet this condition. A copper pan shall be made of not less than 16 ounce per-square-foot sheet copper. The pan shall be anchored in place, so as to prevent floating, and the walls shall extend at least 4 inches above the ground level, with at least 6 inches clearance on all sides except the control side, which shall have at least 18 inches clearance.

~~(10)~~ K. Wind Protection. Floor furnaces shall be protected, where necessary, against severe wind conditions.

~~(11)~~ L. Upper Floor Installations. Floor furnaces may be installed in an upper floor provided the furnace assembly projects below into a utility room, closet, garage, or similar nonhabitable space. In such installation, the floor furnace shall be enclosed completely with means for air intake and with access for servicing with minimum furnace clearances of 6 inches to all-sides and bottom, and with the enclosure constructed of portland cement plaster on metal lath or material of equal fire resistance.

~~(12)~~ M. First Floor Installations. Listed floor furnaces installed in the first or ground floors of buildings need not be enclosed unless the basements of these buildings have been converted to apartments or sleeping quarters in which case the floor furnace shall be enclosed as specified for upper floor installations and shall project into a nonhabitable space.

~~(13)~~ N. Controls. In addition to its operating control a floor furnace shall be provided with an automatic limit control that cannot be set higher than 250 degrees F.

17. Installation Requirements. Duct Furnaces.

~~(1)~~ A. Clearance. Listed duct furnaces shall be installed with clearances of at least 6 inches between adjacent walls, ceiling, and floors of combustible material and the appliance projecting flue box or draft hood, except that duct furnaces listed for installation at lesser clearances may be installed in accordance with their listings. In no case shall the clearance be such as to interfere with the requirements for conbustion air and accessibility.

1903

~~(2)~~ B. Erection of Appliances. Duct furnaces shall be erected and firmly supported in accordance with the manufacturer's instructions.

~~(3)~~ C. Access Panels. The ducts connected to duct furnaces shall have removable access panels on both the upstream and downstream sides of the furnace.

~~(4)~~ D. Location of Draft Hood and Controls. The controls, combustion air inlet, and draft hoods for duct furnaces shall be located outside the ducts. The draft hood shall be located in the same enclosure from which combustion air is taken.

~~(5)~~ E. Circulating Air. When a duct furnace is installed in a confined space, the air circulated by the furnace shall be handled by ducts which are sealed to the furnace casing and which separate the circulating air from the combustion and ventilating air.

~~(6)~~ F. Duct Furnaces Use with Refrigeration Systems.

~~(a)~~ 1. A duct furnace shall not be installed in conjunction with a refrigeration coil when circulation of cooled air is provided by the blower unless the blower has sufficient capacity to overcome the external static resistance imposed by the duct system, furnace, and the cooling coil for the air required for heating or cooling whichever is greater.

~~(b)~~ 2. To avoid condensation within heating elements, duct furnaces used in conjunction with cooling equipment shall be installed in parallel with or on the upstream side of cooling coils unless the duct furnace has been specifically listed for downstream installation. With a parallel flow arrangement, the dampers or other means used to control the flow of air shall be sufficiently tight to prevent any circulation of cooled air through the unit.

~~(c)~~ 3. When duct furnaces are to be located upstream from cooling units, the cooling unit shall be so designed or equipped as to not develop excessive temperatures or pressures.

7903

~~(d)~~ 4. Duct furnaces may be installed downstream from evaporative coolers or air washers if the heating element is made of corrosion-resistant material. Stainless steel, ceramic-coated steel, or an aluminum-coated steel in which the bond between the steel and the aluminum is an iron-aluminum alloy, are considered to be corrosion-resistant. Air washers operating with chilled water which delivers air below the dew point of the ambient air at the appliance are considered as refrigeration systems.

18. Installation Requirements. Unit Heaters.

~~(1)~~ A. Support. Suspended type unit heaters shall be safely and adequately supported with due consideration given to their weight and vibration characteristics. Hangers and brackets shall be of noncombustible material.

~~(2)~~ B. Clearance.

~~(a)~~ 1. Suspended Type Unit Heaters.

~~(1)~~ a. Listed unit heaters shall be installed with clearance from combustible material of not less than 18 inches at the sides, 12 inches at the bottom, and 6 inches above the top when the unit heater has an internal draft hood.

~~(2)~~ b. Unit heaters listed for reduced clearances may be installed in accordance with the clearance marked on the unit which will require not less than 6 inches from the draft hood relief opening, and 6 inches above an elbow attached directly to the draft hood outlet.

~~(3)~~ c. Unlisted unit heaters shall be installed with clearance to combustible material of not less than 18 inches.

~~(4)~~ d. Additional clearances required for servicing shall be in accordance with the manufacturer's recommendations contained in the installation instructions.

7403

~~(b)~~ 2. Floor Mounted Type Unit Heaters

~~(1)~~ a Listed unit heaters shall be installed with clearance from combustible material at the back and one side only of not less than 6 inches. When the flue gases are vented horizontally the 6 inch clearance shall be measured from the draft hood or vent instead of the rear wall of the unit heater.

~~(2)~~ b Unit heaters listed for reduced clearances may be installed at the clearances marked on the unit from the back, two side walls, and ceiling. Walls and ceiling will be required to have at least 6 inches clearance from the draft hood relief openings and the nearest point of the draft hood exterior to the unit.

~~(3)~~ c Floor mounted type unit heaters may be installed on combustible floors if listed for such installation.

~~(4)~~ d Combustible floors under unlisted floor mounted unit heaters shall be protected in an approved manner.

~~(5)~~ e Additional clearances required for servicing shall be in accordance with the manufacturer's recommendations contained in the installation instructions.

~~(3)~~ C. Combustion and Circulating Air. Adequate combustion and circulating air shall be provided.

~~(4)~~ D. Ductwork. A unit heater shall not be attached to a warm air duct system unless listed and marked for such installation.

19. Installation Requirements. Infra Red Heaters.

~~(1)~~ A. Support. Suspended type infra-red radiant heaters shall be safely and adequately fixed in position independent of gas and electric supply lines. Hangers and brackets shall be of noncombustible materials.

~~(2)~~ B. Clearance.

~~(a)~~ 1. Listed heaters shall be installed with clearances from combustible material of not less than shown on the marking plate and in the manufacturer's instructions.

7963

~~(b)~~ 2. Unlisted heaters shall be installed in accordance with clearances from combustible material acceptable to the administrative authority.

~~(3)~~ C. Combustion and Ventilating Air. Mechanical exhaust shall be provided in the quantity recommended by the manufacturer and be sufficient to prevent condensation in the space to be heated. Heaters shall be installed so they will not operate until the exhaust air quantity has been proved. Provisions shall be made for adequate make-up air in the space to be heated.

20. Installation Requirements. Direct Gas Fired Air Heaters.

~~(1)~~ A. Listed direct gas-fired heaters shall be installed in accordance with their listing and the manufacturer's instructions.

~~(2)~~ B. They shall conform to the following requirements and provisions.

~~(3)~~ C. All burners must be positively ignited and safely supervised. No runners or flash tubes will be permitted for burner ignition.

~~(4)~~ D. Under no condition of burner or pilot stoppage shall such equipment discharge unburned gas into the air stream. Burners must ignite or shut off on safety.

~~(5)~~ E. Flame safety controls shall be used which will shut off the fuel supply within five (5) seconds in case of flame failure. Flame safety controls must fail in the safe position. For units with inputs under 400,000 BTU a flame safety control which will shut off the fuel supply within sixty (60) seconds will be acceptable.

~~(6)~~ F. The air supply to be heated must be proved before the pilot can be ignited or main burner valve is allowed to open. Provisions shall be made to shut off the fuel supply in the event of fan air failure or reduction ~~in~~ of fifty per cent (50%) in air flow.

1913

~~(7)~~ G. If outside air closing louvers of either the manual or automatic type are used, the ~~damper~~ louver must be proved in the open position before the pilot can be ignited or the gas burner can operate.

~~(8)~~ H. Proper limit controls shall be provided to limit maximum air temperatures within the unit and ~~shall be provided a limit control~~ to limit the discharge air temperature to one hundred fifty (150°F.) degrees. A low temperature limit control shall be installed in the discharge air stream which will shut off the outside air supply in the event the discharge air temperature falls below forty (40°F.) degrees.

~~(9)~~ J. Main burners which are subdivided into sections or zones shall be so interlocked that the gas supply to the burner adjacent to the pilot must be served first and adjacent burners sequenced so that they positively ignite from each other in proper order.

~~(10)~~ K. Air velocity through or over the burner flames shall not adversely affect the combustion of the gas at the burner heads. A rise in concentration of carbon monoxide between the inlet and the outlet air through the heater shall not exceed ten (10) P.P.M. under all burner firing rates.

~~(11)~~ L. Equipment shall be rated as to its capacity in cubic feet per minute of air raised one hundred degrees (100°F.) in temperature at a given BTU input to the burners. Such equipment must deliver the manufacturer's rating at the established air temperature rise and BTU input.

~~(12)~~ M. The units shall be capable of maintaining the required discharge air temperature within plus or minus five degrees (5°F.) of the control setting irrespective of the outside temperature. The uniformity of the discharge air temperature shall be within thirty degrees (30°F.).

~~(13)~~ N. The installer shall submit plans showing the proposed installation indicating the location of the heater and such accessories as may be required to insure the proper and safe performance of its function.

~~(14)~~ O. Direct gas fired heaters shall use one hundred per cent (100%) outside air for the air to be heated. Combustion air not exceeding one cubic foot (1 cu. ft.) per one hundred (100) BTU may be taken from the room.

7903

~~(15)~~ P. All air passing through or over the burners shall be outside air and screened or filtered to prevent leaves, papers, or other objects from being picked up from the outside, ignited, and discharged into the heater space.

~~(16)~~ Q. Direct gas fired heaters shall be erected and firmly supported in accordance with the manufacturer's instructions.

21. Installation Requirements. Air Conditioners. Gas.

~~(1)~~ A. Connection of Gas Engine-Powered Air Conditioners. To protect against the effects of normal vibration in service, gas engines shall not be rigidly connected to the gas supply pipings.

~~(2)~~ B. Manual Main Shutoff Valves. When a complete shut-off type automatic pilot system is not utilized, a manual main shutoff valve shall be provided ahead of all controls except the manual pilot gas valve. When a complete shutoff type automatic pilot system is utilized, a manual main shutoff valve shall be provided ahead of all controls. A union connection shall be provided downstream from the manual main shutoff valve to permit removal of the controls.

~~(3)~~ C. Clearances for Indoor Installation.

~~(a)~~ 1. Listed air conditioning appliances installed in rooms which are large in comparison with the size of the appliance, shall be installed with clearances not less than specified in Line 1 of Table ~~1~~ 7903-A except as provided in the following:

~~(1)~~ a. Air conditioning appliances listed for installation at lesser clearances than specified in Table ~~1~~ 7903-A may be installed in accordance with their listing and the manufacturer's instructions.

~~(2)~~ b. Air conditioning appliances listed for installation at greater clearances than specified in Table ~~1~~ 7903-A shall be installed in accordance with their listing and the manufacturer's instructions unless protected as specified in ~~(3) following~~ (SBC 7903-21C,1-c). However, when clearances are specified to provide access for service, they shall not be reduced.

1983

~~(3)~~ c. Air conditioning appliances may be installed in rooms, but not in confined spaces such as alcoves and closets, with reduced clearances to combustible material provided the combustible material or the appliance is protected as described in Table 2 7~~6~~-B. However, when clearances are necessary or specified to provide access for service, they shall not be reduced.

~~(b)~~ 2. Air conditioning appliances shall not be installed in confined spaces such as alcoves and closets unless they have been specifically listed for such installation and are installed in accordance with their listing. The installation clearances for air conditioning appliances in confined spaces shall not be reduced by the protection methods described in Table 2 7~~6~~-B. When the plenum for an air conditioner which includes provisions for heating air is adjacent to combustible material, the clearance shall be measured to the surface of the plaster or other noncombustible finish when the clearance specified is 2 inches or less. The clearance to these appliances shall not interfere with the requirements for combustion air, draft hood clearance and relief, and accessibility for servicing.

~~(c)~~ 3. Unlisted air conditioning appliances shall be installed with clearances from combustible material of not less than 18 inches above the appliance and at sides, front, and rear, and 9 inches from projecting flue box or draft hood.

22. Installation Requirements for Gas Burning Appliances Other Than Heating.

A. Installations shall comply with these requirements and other applicable sections of this code.

1. Each such appliance shall be so located as not to constitute a fire hazard to persons or property, and so installed that its continued operation will not in any way create such a hazard. No device with attached casters, rollers, or the equivalent shall have a rigid or semi-rigid connection to the gas system. Each gas appliance connected to the gas system shall be connected in such a manner that they may be disconnected without cutting a pipe, melting a sweated joint or breaking a fitting.

7963

2. Device Support. All such devices shall be adequately supported, and so connected to the piping as not to exert undue strain on the connection.

3. Oxygen Under Pressure. When air or oxygen under pressure is used in connection with the gas supply, effective means shall be provided to prevent the air or oxygen from going back in to the gas piping. When pre-mixed gas is used, adequate air intake to the mixing room or space shall be provided.

4. Attachments Not To Impair Combustion. No device or attachment shall be installed on any gas burning device which may in any way impair the combustion of gas.

5. Clearances for Installation of Gas Appliances. Minimum clearances between combustible construction and conventional appliances are as follows:

   a. Range. Listed domestic ranges when installed on combustible floors shall be set on their own bases or legs and shall be installed with clearance of not less than that shown on the marking plate and the manufacturer's instructions. In the absence of clearance information on the marking plate, the range shall be installed with clearances of not less than shown in Table 79-D. The clearance shall not interfere with requirements for combustion air, accessibility for operation, or servicing. Domestic ranges shall have a vertical clearance above the cooking top of not less than 30 inches to combustible material or metal cabinets except the clearance may be reduced to no less than 24 inches as follows:

      1. The underside of the combustible material or metal cabinet above the cooking top is protected with asbestos millboard at least 1/4 inch thick covered with sheet metal not lighter than No. 28 manufacturer's standard gauge, or

      2. A metal ventilating hood of not lighter than No. 28 manufacturer's gauge sheet metal is installed above the cooking top with a clearance of not less than 1/4 inch between the hood and the underside of the combustible material or metal cabinet and the hood is at least as wide as the range is and is centered over the range.

1983

b. Listed Commercial Gas Ranges: Clearances for commercial gas ranges shall comply with ANSI Z-21.30.

c. Water Heaters: Listed gas-fired water heaters may be installed upon combustible floors. In the absence of clearance information see Table 79-E.

d. Clothes Dryers: Listed clothes dryers shall be installed with minimum clearance of 6 inches from adjacent combustible construction except that clothes dryers listed for installation at lesser clearances may be installed in accordance with their listing. Moisture exhaust ducts shall be installed with clearances for high temperature duct systems in accordance with the standards for the installation of exhaust ducts for clothes dryers Section 4.15 of NFPA Pamphlet No. 54 - 1969. A minimum clearance of 18 inches shall be provided between the lower surface of any combustible material located above the dryer and the top of any other vent outlet not protected by a 250° F. or lower limit control.

e. Incinerators: Free standing incinerators shall have at least 12 inches clearance between sides and combustible construction except those listed for reduced clearances under incinerators clearance, Section 4.16 of NFPA Pamphlet No. 54 - 1969.

6. Permissible Temperatures. All gas appliances and their flue or vent connectors shall be installed so that continued or intermittent operations will not create a hazard to persons or property. They shall not, during operation, raise the temperature of unprotected combustible walls, partitions, floors, or ceiling more than 90 degrees F. above normal room temperature when measured with mercury thermometers or conventional bead type thermocouples. (When wall and partition temperatures are measured with disc type thermocouples as specified in American National Standards Institute Approved Requirements for the types of appliances involved an indicated temperature rise of 120 degrees F. will correspond to the 90 degrees F. rise measured with thermometers or conventional bead type thermocouples.)

7. Automatically Controlled Appliances. Every automatically controlled appliance whose main burner or burners go off and on, shall be equipped with an automatic safety pilot. Where heavier than air gas is used, the safety shut-off of gas to appliance shall be complete.

8. Automatic Pilot Equipment. Gas burning devices shall be so equipped with automatic pilot devices except where:
   a. The gas burning device is approved by a recognized testing laboratory without an automatic pilot device.

SBC 7904 is deleted in its entirety and the following inserted in lieu thereof:

SBC 7904 The venting of gas burners shall be in accordance with the applicable sections of SBC 740[illegible] of this code.

SBC 7905 is amended to read as follows:

SBC 7905 Tests. Burner Operation. Appliance Performance.

~~(1)~~ 1. Placing Equipment in Operation. Immediately upon completion of all installations the installer shall test all safety shut-off, operating controls and venting before placing the burner in service. The correct input of gas should be determined and the fuel-air ratio set.

~~(a)~~ A. Adjusting the Burner Input; Tests. Each burner shall be adjusted to its proper input in accordance with the manufacturer's instructions. ~~Over-rating~~ Over-firing of burners is prohibited.

~~(1)~~ 1. Gas Designed Equipment. The rate of flow of the gas shall be adjusted to within plus or minus 2% of the ~~required~~ hourly BTU rating, ~~at the manifold pressure specified by the manufacturer. When the prevailing pressure is less than the manifold pressure specified, the gas rates shall be adjusted at the prevailing pressure.~~

~~(2)~~ 2. Conversion Burners. For Conversion burners installed in hot water boilers or warm air furnaces the rate of flow of the gas in BTU per hour shall be adjusted to within plus or minus 5% of 1.7 times the calculated hourly BTU heat loss of the building in which it is installed.

~~(3)~~ 3. For conversion burners installed in steam boilers the gas hourly input demand shall be adjusted to meet the steam load requirements. In case of over-sized boiler having rating in excess of load requirements, the gas input demand necessitated by such over-sized boiler shall be established and added to the input demand for load requirements to arrive at total input demand.

~~(b)~~ B. Pilot Operations. Pilot flames shall be effective to ignite the gas at the main burner or burners and shall be adequately protected from drafts.

~~(1)~~ 1. Pilot flames shall not become extinguished when the main burner or burners are turned on or off in a normal manner, either manually or by automatic controls.

~~(2)~~ 2. Luminous flame pilots shall not show carbon deposits when adjusted according to the manufacturer's instructions.

~~(3)~~ 3. Where escapement pilots are used, their flames shall be freely ignited by the constant burning pilot.

~~(c)~~ C. Burner Operation. In making the tests to determine compliance with this section, care shall be exercised to prevent the accumulation of unburned gas in the appliance or flues which might result in explosion or fire.

~~(1)~~ 1. The flames from each burner shall freely ignite the gas from adjacent burners when operating at the prevailing gas pressure or when the main control valve is regulated to deliver about 1/3 the full gas rate.

~~(2)~~ 2. Burner flames shall not flash back upon immediate ignition, nor upon turning the gas cock until the gas rate to the burner is about 1/3 the full supply.

~~(3)~~ 3. Burner flames shall not flash back when the gas is turned on or off by any automatic control mechanism.

~~(4)~~ 4. Main burner flames shall ignite freely from each constant burning pilot when the main control valve is regulated to about 1/3 the full gas rate or when pilot flame is reduced to minimum point at which it will actuate the safety thermostatic device.

~~(5)~~ 5. When ignition is made in a normal manner the flame shall not flash outside the appliance.

~~(6)~~ 6. Burners shall not expel gas through air openings in mixer faces when operating at the prevailing pressure.

~~(d)~~ D. Appliance Performance. The concentration of oxygen in the flue products of conversion burners shall, in no case, be less than 4% nor ~~less~~ more than 10%. The allowable limit of C.O. shall not exceed .04%. The flue gas temperature of gas designed appliances, as taken on the appliance side of the draft hood, shall not exceed 480 degrees F. above that of the room air temperature surrounding the appliance.

~~(1)~~ 1. Method of Test. The appliance shall be allowed to operate until the stack temperature becomes stabilized, after which a sample of the flue products shall be taken at a point in the flue after the outlet of the appliance but ahead of the draft hood and analyzed for carbon dioxide and carbon monoxide. When carbon dioxide and carbon monoxide samples of combustion products have been analyzed an oxygen determination can be made from a combustion scale or chart.

~~(2)~~ 2. The venting and various controls of the appliance shall be checked by the installer to insure their proper operation.

~~(3)~~ 3. Upon completion of the test of any newly installed gas burning equipment as hereinabove provided in this section, the installer shall file with authority complete records of such test including report of smoke bomb test of warm air furnace. A tag stating the date of test and name of tester shall be attached to the appliance.

~~(e)~~ E. Instructions to the Customer. The customer shall be thoroughly informed by the installer as to the proper and safe operation of the appliance before it is placed in continuous service.

~~(f)~~ F. The wiring diagram of the installation and suitable operating instructions shall be supplied and posted near the boiler or furnace.

~~(1)~~ 1. In the absence of the customer, printed instructions enclosed in an envelope labeled "Instructions to Customers" and attached to the main shutoff valve of the appliance by the installer, shall be construed as having fulfilled the aforementioned requirements.

~~(2)~~ 2. A metallic plate, suitably etched or stamped, setting forth detailed instructions for the safe lighting and shutting off of the appliance shall be permanently attached to the appliance in a prominent position near the lighting apertures. The size of type used shall be not smaller than 10 point and the wording contained theron shall be subject to the approval of the administrative authority.

SBC 8001 is amended to read as follows:

SBC 8001 Gas Piping.

1. Approval of Materials and Appliances. ~~No person shall install any material to connect same to any gas system, which material has not been approved by the administrative authority.~~ Materials which have not been approved by the ~~Approval~~ Advisory Board shall not be installed or connected to any gas system.

2. ~~The administrative authority~~ The ~~Approval~~ Advisory Board shall accept for installation any appliance or material which has been listed by a recognized national testing laboratory, until such time as experience in the field of actual service developing unforseen factors warranting withdrawal of acceptance.

SBC 8002 is amended to read as follows:

SBC 8002 Gas Piping Material, Connection.

1. All pipe used for the distribution of natural or liquid petroleum gas shall be steel, wrought iron, copper or brass of full weight standard gauge and thickness, or plastic pipe or tubing for outside underground installations only. Steel and wrought iron pipe shall comply with ~~A.S.A.~~ ANSI B36.10. 1970 Steel and wrought iron piping run outside exposed above ground shall be galvanized, painted, or coated with an approved rust resistant material.

2. All steel and wrought iron pipe 2 1/2 inch and larger shall be welded. Fittings on screw or flange piping, (except stopcocks and valves) shall be malleable iron, wrought iron or steel.

3. Copper tubing or approved steel tubing shall be of standard 1971 type K or L or equivalent, complying with ASTM B88 and having a minimum wall thickness for each tubing size in compliance with ASTM specifications. Joints shall be made by approved flared gas fittings or by brazing with a material having a melting point in excess of 1,000 degrees F. Compression type fittings shall not be used for this purpose. Copper or iron tubing shall not be used for piping within the burner heat zone to pilot burners.

4. All plastic pipe or tubing shall meet specification ASTM D2513-71 or specification ASTM D2517-67 for gas pressure pipe, tubing and fittings. Such piping and compatible fittings may be used for outside underground piping only. The plastic pipe or tubing shall terminate a minimum of 3 feet horizontally from any structure. At that point there shall be a transition to an approved metal pipe or tubing with a fitting approved for this purpose. All piping must be installed to minimize shear, tensile and thermal stresses.

5. Plastic pipe, tubing and fittings shall be joined by either the solvent cement method, adhesive method, heat-fusion method, or by means of compression couplings or flanges. The material used shall also be taken into consideration when determining which method is to be used. The following shall be observed when making such joints:

   A. Plastic pipe or tubing shall not be threaded.

   B. Solvent cement joints, adhesive joints, and heat-fusion joints shall be made in accordance with qualified procedures which have been established and proven by test to produce gas-tight joints at least as strong as the pipe or tubing being joined.

   C. Solvent cement or heat-fusion joints shall not be made between different kinds of plastics.

   D. Heat-fusion or mechanical joints shall be used when joining polyethylene pipe, tubing or fittings.

   E. Flanges, flared joints, or special joints may be used providing they are properly qualified and utilized.

   F. When compression type mechanical joints are used, the gasket material in the fitting shall be compatible with the plastic piping and with the gas distributed by the system. An internal tubular rigid stiffener shall be used in conjunction with the fitting and the stiffener shall be flush with end of the pipe or tubing and extend at least to the outside end of the compression fitting when installed. The stiffener shall be free of rough or sharp edges and shall not be force fit in the plastic. A split tubular stiffener shall not be used.

   G. The joint shall be designed and installed to effectively sustain the longitudinal pull-out forces caused by contraction of the piping or external loading.

8113

SBC 8003 is amended to read as follows:

SBC 8003 Flexible Gas Tubing Connections. No person shall install, use or maintain flexible gas connections between gas burning devices and the supply piping except on specific approval of the ~~administrative-authority Approval~~ Advisory Board. When a flexible connection is made, a shut off valve must always be provided at the end where the flexible connector is attached to the rigid piping.

SBC 8004 is amended to read as follows:

SBC 8004 New Materials. ~~Any-materials-may-be-permitted-other-than-as specified-in-this-Code,-if-the-administrative-authority-approves such-materials-as-being-of-the-same-quality-and-performance-as the-material-specified-herein.~~ The ~~Approval~~ Advisory Board may approve new materials if demonstrated to be the equivalent to that prescribed in the code.

8005-8009 N.C.

SBC 8010 Numbering has been editorially changed.

SBC 8010 Pipe Threads.

~~(1)~~ 1. Specifications for Pipe Threads. Pipe and fitting threads shall comply with the American National Standard for Pipe Threads (except Dryseal), B 2.1 -1968.

~~(2)~~ 2. Damaged Threads. Pipe with threads which are stripped, chipped, corroded, or otherwise damaged shall not be used.

~~(3)~~ 3. Number of Threads. Pipe shall be threaded in accordance with Table ~~3~~ 80-A.

8011 - 8012 N.C.

SBC 8013 is amended to read as follows:

SBC 8013 Structure Protection. The building structure shall not be weakened by the installation of any gas piping. ~~Before-the-beams or-joists-are-cut-or-notched,-special-permission-shall-be-obtained from-the-administrative-authority.~~ Refer to Appendix ~~76~~ I of ~~SBC 7604~~ for approved method.

I FG-76-1

8014 N. C.

SBC 8015 is amended to read as follows:

SBC 8015 Restricted Pipe Runs.

1. Gas pipes inside any building shall not be run in or through an air duct, clothes chute, chimney or flue, ventilating duct, dumb waiter or elevator shaft. ~~or be run in false ceilings when the space is used as an air plenum.~~ Pipe shafts specifically designed for this purpose will be acceptable.

2. Gas piping to be run in false ceilings when the space is used as an air plenum shall have all connections made by welding or brazing. No valves, threads, unions or connectors of any type shall be permitted.

3. Outlets Capped. Each outlet, including a valve or cock outlet, shall be securely closed gas tight with a threaded iron plug or cap immediately after installation and shall be left closed until an appliance is connected thereto. Likewise, when an appliance is removed from the outlet and the outlet is not to be used again immediately, it shall be securely closed gas tight. In no case shall the outlet be closed with tin caps, wooden plugs, corks, etc.

SBC 8016 Editorial changes.

SBC 8016 Restrictions on Concealed Piping.

1. Piping run in inaccessible or concealed spaces in or under buildings shall be constructed and installed to prevent a hazardous accumulation of gas. Concealed piping in walls should be located in hollow rather than solid partitions.

2. Piping run underground inside the building, or run in solid floors such as concrete, shall be run in conduits or casings. Piping may be laid in channels in the floor that have removable covers to permit access to the piping with a minimum of damage to the building. Such casings, conduits or channels shall be left open into an accessible location or be vented so a leak will be readily detected.

8016

3. Piping run underground inside the building and extending underground outside the building shall be encased in a gas-tight conduit. The conduit shall extend into a normally usable and accessible portion of the building and at the point where the conduit terminates in the building, the space between the conduit and gas pipe shall be sealed to prevent the possible entrance of any gas leakage. The conduit shall be vented above grade to the outside and the bent terminal shall be screened and hooded to prevent accidental closure. The conduit shall extend at least four inches (4") beyond the outside building wall or any adjacent paved area, except the conduit need not exceed ten feet (10') in distance from the building under any paved area. The space between the gas pipe and the conduit at the underground end shall be left open.

4. Concealed tubing run through joists, studs, plates, or other wood construction within 2 inches of the rough surface, shall be protected from physical damage by steel plates or sleeves of at least 20 gauge thickness.

5. Unions, flared or compression fittings, running threads, right and left couplings, or bushings shall not be used on concealed gas piping inside the building.

8017 N.C.

SBC 8018 is amended to read as follows:

SBC 8018 Piping Underground Outside.

1. Any gas piping to be run underground outside the building shall be copper, steel, ~~or~~ wrought iron or plastic.

2. When underground piping passes through flower beds, gardens or under walks or driveways, consideration must be given to protect piping from physical damage.

3. Steel or wrought iron pipe shall have an approved outside protective coating of polyethylene, polyvinyl, or its equivalent of 10 mil thickness or greater. The pipe shall not be threaded, but shall be joined by welding or mechanical joints, and such joints shall be suitably wrapped with an approved protective coating.

SBC 8019 Editorial changes.

SBC 8019 Meter Location.

~~(1)~~ The meter location shall be such that the meter can be easily read and the connections are readily accessible for servicing. Location, space requirements, dimensions, and type of installation shall be acceptable to the servicing gas supplier.

8020 N.C.

SBC 8021 is amended to read as follows:

SBC 8021 Meter Room Ventilation. Meter room shall be ventilated, when necessary, through adequate grills in doors, walls or local ventilation to outer air. ~~Grills in doors or walls shall not be open into building interiors.~~

SBC 8022 is amended to read as follows:

SBC 8022 Main Gas Supply Shut-off.

1. When meters are installed inside the building, a main shut-off valve shall be installed in a readily accessible location inside the builidng on the street side of the meter.

2. When meter or meters are installed on the exterior of the building walls, a main shut-off valve, same size as the main building gas supply shall be installed on the inside of the building between the meter and the first branch gas line. This shut-off valve shall be installed in the first readily accessible location for use and operation and shall have a permanently attached handle. In multiple dwellings this main shut-off valve shall not be located in an apartment or locked room, but shall be in the utility room or ~~otherwise so located in an apartment or locked room, but shall be in the utility room or~~ otherwise so located as to be readily accessible to all occupants of the building at all times. All valves shall be clearly visible or of easy access.

3. All main shut-off valves shall be approved lubricated plug-type, ball type, or of a type approved by the ~~administrative authority.~~ ~~Approval~~ Advisory Board.

SBC 8023 Numbering has been editorially changed.

SBC 8023 Gas Valves.

1. For each burning device there shall be provided, in the pipe supplying same, and adjacent thereto, an independent shut-off valve, placed in an accessible location.

2. Every valve shall be readily accessible for operation and repair. All gas valves shall be of lever handle type. Inputs exceeding 1,000,000 BTU per hour, or where metering or regulating pressure exceeds 14 inches water column, the valve shall be an approved lubricated plug type, ball type, or of a type approved by the ~~administrative authority~~ ~~Approval~~ Advisory Board.

~~(1)~~ 3. Accessibility of Gas Valves. Main shut-off valves controlling several gas piping systems shall be placed an adequate distance from each other so they will be easily accessible for operation and shall be installed so as to be protected from physical damage. It is recommended that they be plainly marked with a metal tag attached by the installing agency so that the gas piping systems supplied through them can be readily identified. It is advisable to place a shut-off valve at every point where safety, convenience of operation, and maintenance demands.

~~(2)~~ 4. Shut-off Valves for Multiple House Lines.

~~(a)~~ A. In multiple tenant buildings supplied through a master meter or one service regulator when a meter is not provided, or where meters or service regulators are not readily accessible from the appliance location, an individual shut-off valve for each apartment, or for each separate house line, shall be provided at a convenient point of general accessibility.

~~(b)~~ B. In a common system serving a number of individual buildings, shut-off valves shall be installed at each building.

SBC 8024 is amended to read as follows:

SBC 8024 Electrical Grounding.

~~(a)~~ 1. A gas piping system within a building shall ~~not~~ be ~~used as a~~ electrically continuous and bonded to any grounding electrode, as defined by the National Electrical Code, ~~ASA~~ ANSI C1-~~1962~~ 1971 (NFPA No. 70)

~~(b)~~ 2. Underground gas service piping shall not be used as a grounding electrode, ~~except when it is electrically~~ continuous uncoated metallic piping, and its use as a grounding electrode is acceptable both to the serving gas supplier and to the authority having jurisdiction, since gas piping systems are often constructed with insulating bushings or joints, or are of coated or non-metallic piping.

~~(c) Gas piping shall be grounded to an NEC approved ground. See Z-21.30.~~

SBC 8025 is amended to read as follows:

SBC 8025 Gas Pressure Regulators

~~(1)~~ 1. General.

A. All relief devices or regulators equipped with relief devices shall be vented to the outside atmosphere.

B. When the gas supply pressure is higher than the pressure at which the burner or appliance is designed to operate, a gas pressure regulator shall be installed.

C. For the purpose of this code, gas pressures not exceeding 14 inches water column shall be called the low pressure. Gas pressures exceeding 14 inches water column shall be called high pressure.

~~(2)~~ 2. High Pressure Gas Regulators. Gas regulators designed to regulate from ~~pounds~~ high inlet pressure to ~~pounds~~ high outlet pressure shall:

~~(a)~~ A. Have a pressure rating of not less than the protected metering pressure.

8025

~~(b)~~ B. Be of the full lock up type.

~~(c)~~ C. All such regulators shall be vented to the outside of the building.

~~(3)~~ 3. High Pressure to Low Pressure Regulators. Gas regulators designed to regulate ~~pounds~~ high inlet pressure to low outlet pressure shall:

~~(a)~~ A. Have a pressure rating of not less than the protected metering pressure.

~~(b)~~ B. Be of the full lock up type.

~~(c)~~ C. All such regulators shall be vented to the outside of the building, except that regulators equipped with vent limiting devices, to limit the escape of gas from the vent opening in the event of diaphragm failure, may be used without outside vents when approved by the administrative authority.

~~(4)~~ 4. Low Pressure Regulators. Gas regulators designed to regulate from low inlet pressure to lower outlet pressure shall:

~~(a)~~ A. Low pressure regulators are not required to be vented to the outside of the building unless the connected load exceeds 1,000,000 BTU per hour.

~~(b)~~ B. Low pressure regulator vents shall be protected from stoppage by dirt and foreign matter.

~~(c)~~ C. Low pressure regulator vents shall not be vented into a combustion chamber that is equipped with an intermittent pilot.

~~(5)~~ 5. Regulator Installation. All regulator installations shall comply with the following:

~~(a)~~ A. Regulators shall be installed in accordance with the manufacturer's instructions.

~~(b)~~ B. Regulators shall be rated to supply the total load required.

~~(c)~~ C. Regulators shall be readily accessible for servicing, and testing outlet pressure, and in no case shall said regulators be covered by ceiling or other types of unventilated construction.

8025

~~(d)~~ D. All regulators shall be provided with an accessible shut-off valve for servicing the regulator.

~~(e)~~ E. High gas pressure protection shall be provided when using a high pressure regulator or a high pressure to low pressure regulator unless otherwise approved by the administrative authority. The protection device may be incorporated as part of the regulator or by separate pressure limiting mechanism.

~~(f)~~ F. When regulators are required to be vented to the outside of the building, such vent piping shall be sized in accordance with the manufacturer's instructions. Vent piping shall terminate a minimum of six feet away from combustion or any air inlet to the building and shall be suitably screened and hooded so as to prevent accidental closure of the vent pipe.

~~(g)~~ G. Regulators shall be vented individually unless otherwise approved by the administrative authority.

~~(h)~~ H. ~~Regular~~ Regulator vents shall not terminate into a vent connector, breeching, stack, or chimney.

SBC 8026 Numbering has been editorially changed.

SBC 8026 Size of Piping to Gas Appliances.

~~(1)~~ 1. Gas piping shall be of such size and so installed as to provide a supply of gas sufficient to meet the maximum demand without undue loss of pressure between the meter, or service regulator when a meter is not provided, and the appliance or appliances. The size of the gas piping depends upon the following factors:

~~(a)~~ A. Allowable loss in pressure from meter, or service regulator when a meter is not provided, to appliances.

~~(b)~~ B. Maximum gas consumption to be provided.

~~(c)~~ C. Length of piping and number of fittings.

~~(d)~~ D. Specific gravity of the gas.

~~(e)~~ E. Diversity factor.

~~(f)~~ F. Manufacturers minimum pressure requirement at the appliance.

SBC 8027 is amended to read as follows:

SBC 8027 Gas Consumption

~~(1)~~ 1. The quantity of gas to be provided at each outlet shall be determined, whenever possible, directly from the manufacturer's BTU rating of the appliance which will be installed. In case the ratings of the appliances to be installed are not known, Table ~~1,~~ 80-B is given to show the approximate consumption of average appliances of certain types in BTU per hour.

~~(2)~~ 2. To obtain the cubic feet per hour of gas required, divide the total BTU input of all appliances by the average BTU heating value per cubic foot of gas (1,000 BTU ~~per hour~~ for Natural Gas).

SBC 8028 is amended to read as follows:

SBC 8028 Size of Pipe.

1. The size of the gas pipe hereafter installed shall conform to one of the following tables. The correct table should be selected as determined by the allowable pressure drop from SBC 8025 and SBC 8026. The gas capacities for various pipe sizes are given for a specific pressure drop. Due allowances for the effect of any ordinary number of fittings shall be made.

2. Following the sizing tables, Figure ~~No.~~ 80-1 ~~can be used to~~ is an example of how to determine the size of each branch and section of gas piping system based on Table ~~No. 2.~~ 80-E.

3. The following is an example of sizing gas piping using Table ~~1 in SBC 1927~~ 80-E.

~~1.~~ A. Use gas range Table ~~4~~ 80-C for multiple range installation when sizing all main and branch line piping. Use actual input rating on water heater and furnace.

~~2.~~ B. To size pipe A put the total input load on the distance from meter to end of longest run.

6 ranges + water heater + furnace
160 + 125 + 165 = 450 cu. ft.
35 + 25 + 15 = 75 ft. developed length

Chart 450 cu.ft. and 75 ft. length
1 1/4 inch pipe for Section A.

3. C. To size Pipe B, put 6 ranges on distance from meter to end range.
6 ranges=160 cubic feet: 35+1+20+2+8=66 ft. length.
3/4 inch pipe for Section B.

4. D. To size pipe C put 3 ranges on distance from meter to end range.
3 ranges=110 cubic feet: 35+1+20+2+8=66 ft. length.
3/4 inch pipe for Section C.

5. E. To size pipe D put 2 ranges on distance from meter to end range.
2 ranges=90 cubic feet: 35+1+20+2+8=66 ft. length.
3/4 inch pipe for Section D.

6. F. To size pipe E put 1 range on distance from meter to the range.
1 range=60 cubic feet: 35+1+20+2+8=66 ft. length.
1/2 inch pipe for Section E.

7. G. To size pipe F put water heater and furnace on the longest distance from meter.
Water heater 125 cubic feet + Furnace 165 cubic feet= 290 cubic feet.
35+25+15=75 feet length.
1 1/4 inch pipe for Section F.

8. H. To size pipe G put water heater on the distance from the meter.
Water heater 125 cubic feet: 35+25+10=70 feet.
~~1~~ 3/4 inch pipe for Section G.

9. J. To size pipe H put furnace on the distance from meter.
Furnace 165 cubic feet: 35+25+15=75 feet length.
1 inch pipe for Section H.

8029 - N.C.

SBC 8030 Numbering has been editorially changed.

SBC 8030 Leakage Test After Gas Turn On

~~(1)~~ 1. Close All Gas Outlets. Before turning gas under pressure into any piping, all openings from which gas can escape will be closed.

~~(2)~~ 2. Check for Leakage. Immediately after turning on the gas, the piping system shall be checked by one of the following methods to ascertain that no gas is escaping:

~~(a)~~ A. Checking the Leakage Using the Gas Meter. Immediately prior to the test it should be determined that the meter is in operating condition and has not been bypassed.

B. Checking for leakage can be done by carefully watching the test dial of the meter to determine whether gas is passing through the meter. To assist in observing any movement of the test hand, wet a small piece of paper and paste its edge directly over the center line of the hand as soon as the gas is turned on. Allow five minutes for a one-half foot dial and proportionately longer for a larger dial in checking for gas flow. This observation should be made with the test hand on the upstroke. In case careful observation of the test hand for a sufficient length of time reveals no movement, the piping shall be purged and a small gas burner turned on and lighted and the hand of the test dial again observed. If the dial hand moves (as it should) it will show that the meter is operating properly. If the test hand does not move or register flow of gas through the meter to the small burner, the meter is defective and the gas should be shut off and the serving gas supplier notified.

~~(b)~~ C. Checking for Leakage Not Using a Meter. This can be done by attaching to an appliance orifice a manometer or equivalent device calibrated so that it can be read in increments of 0.1 inch water column, and momentarily turning on the gas supply and observing the gaging device for pressure drop with the gas supply shut off. No discernible drop in pressure shall occur during a period of 3 minutes.

~~(c)~~ D. When Leakage is Indicated. If the meter test hand moves, or a pressure drop in the gage is noted, all appliances or outlets supplied through the system shall be examined to see if they are shut off and do not leak. If they are found tight there is a leak in the piping system. The gas supply shall be shut off until the necessary repairs have been made, after which the test specified in ~~(a)~~ A. and ~~(b)~~ B. shall be repeated.

SBC 8031 Numbering has been editorially changed.

SBC 8031 Purging

~~(1)~~ 1. Purging All Gas Piping.

~~(a)~~ A. After piping has been checked, all gas piping shall be fully purged. A suggested method for purging the gas piping to an appliance is to disconnect the pilot piping at the outlet of the pilot valve. Piping shall not be purged into the combustion chamber of an appliance.

~~(b)~~ B. The open end of piping systems being purged shall not discharge into confined spaces or areas where there are sources of ignition unless precautions are taken to perform this operation in a safe manner by ventilation of the space, control of purging rate, and elimination of all hazardous conditions.

~~(2)~~ 2. Light Pilots. After the gas piping has been sufficiently purged, all appliances shall be purged and the pilots lighted. The installing agency shall assure itself that all piping and appliances are fully purged before leaving the premises.

SBC 8032 is amended to read as follows:

SBC 8032 LP Gas Installations

The installation and maintenance of undiluted or diluted LP gas installations or portions of such installations shall be made to the standards of ~~USA~~ ANSI Standard Storage and Handling of Liquefied Petroleum Gases Z-106.1-1970 (NFPA No. 58) and applicable sections of this code.

SBC 8033 Numbering has been editorially changed.

SBC 8033 General Safety Precautions.

~~(1)~~ 1. Checking for Gas Leaks. When an investigation discloses a concentration of gas inside of a building, the following immediate actions shall be taken, simultaneously if possible.

~~(a)~~ A. Clear the room, building, or area of all occupants.

~~(b)~~ B. Shut off the supply of gas to the areas involved.

~~(c)~~ C. Ventilate the affected portion of the building by opening windows and doors including basement windows.

~~(d)~~ D. Use every practical means to eliminate sources of ignition. Take precautions to prevent smoking, striking matches, operating electrical switches, or devices, opening furnace doors, etc. If possible, cut off all electric circuits at a remote source to eliminate operation of automatic switches in the dangerous area. Safety flashlights designed for use in hazardous atmospheres are recommended for use in such emergencies.

~~(e)~~ E. Investigate other buildings in the immediate area to determine the presence of escaping gas therein.

~~(f)~~ F. Notify the gas supplier.

Tables of Chapter 80 of the SBC have been editorially changed.

Table 80-A

SPECIFICATIONS FOR THREADING PIPE

Iron Pipe Size (Inches)	Approximate Length of Threaded Portion (Inches)	Approximate No. of Threads to be Cut
½	¾	10
¾	¾	10
1	⅞	10
1¼	1	11
1½	1	11
2	1	11
2½	1½	12
3	1½	12
4	1⅝	13

Table 80-B

APPROXIMATE GAS INPUT FOR SOME COMMON APPLIANCES

APPLIANCE	Input BTU per hour Approximate
Water heater, automatic storage, 30-40 gal. tank	45,000
Water heater, automatic storage, 50 gal. tank	55,000
Water heater, automatic instantaneous (2 gal. per min.)	142,800
Water heater, automatic capacity (4 gal. per min.)	285,000
Water heater, automatic capacity (6 gal. per min.)	428,400
Water heater, domestic, circulating or side arm	35,000
Refrigerator	3,000
Clothes dryer, Type 1 (domestic)	35,000
Gas light	2,500
Incinerator, Domestic	35,000

For specific appliances or appliance not shown above, the input should be determined from the manufacturer's rating.

Table 80-C

DOMESTIC RANGE TABLE

The following table shall be used in sizing gas piping for the domestic ranges and built-in cooking units:

Number Ranges	Demand Cubic Feet	Number Ranges	Demand Cubic Feet
1	60	15	275
2	90	16	285
3	110	17	295
4	130	18	315
5	145	20	330
6	160	22	356
7	175	24	375
8	190	26	390
9	200	28	420
10	210	30	430
11	225	40	509
12	235	60	690
13	250	80	820
14	260	100	900

Table No.-1 80-D

Maximum capacity of pipe in cubic feet of gas per hour based upon a pressure drop of 0.3 inch water column and 0.6 specific gravity gas.

Length in Feet	NOMINAL IRON PIPE SIZE, INCHES								
	½	¾	1	1¼	1½	2	2½	3	4
10	132	278	520	1050	1600	3050	4800	8500	17500
20	92	190	350	730	1100	2100	3300	5900	12000
30	73	152	285	590	890	1650	2700	4700	9700
40	63	130	245	500	760	1450	2300	4100	8300
50	56	115	215	440	670	1270	2000	3600	7400
60	50	105	195	400	610	1150	1850	3250	6800
70	46	96	180	370	560	1050	1700	3000	6200
80	43	90	170	350	530	990	1650	2800	5800
90	40	84	160	320	490	930	1500	2600	5400
100	38	79	150	305	460	870	1400	2500	5100
125	34	72	130	275	410	780	1250	2200	4500
150	31	64	120	250	380	710	1130	2000	4100
175	28	59	110	225	350	650	1050	1850	3800
200	26	55	100	210	320	610	980	1700	3500

Table No.-2 80-E

Maximum capacity of pipe in cubic feet of gas per hour based upon a pressure drop of 1 inch water column and .60 specific gravity gas.

Length in Feet	NOMINAL PIPE OR I. D. TUBING SIZE									
	⅜	½	¾	1	1¼	1½	2	2½	3	4
5	145	280	750	1080	2200	3450	7000	11200	20000	42000
10	96	187	500	760	1550	2450	4950	8000	14200	29500
15	76	148	395	620	1300	2000	4000	6500	11500	24000
20	66	126	335	520	1100	1700	3450	5600	10000	21000
30	52	100	265	440	900	1400	2850	4600	8300	17000
40	44	84	225	380	795	1200	2500	4000	7200	14500
50	39	74	200	345	700	1100	2200	3550	6350	13000
60	35	67	180	315	640	1000	2000	3250	5800	12000
70	32	61	165	290	600	920	1850	3000	5400	11000
80	30	57	153	270	560	860	1750	2800	5050	10400
90	28	53	142	255	520	810	1650	2650	4750	9700
100	26	50	134	240	500	770	1580	2500	4500	9300
125	23	44	118	215	450	690	1400	2250	4000	8400
150	21	39	106	195	410	620	1290	2050	3650	7600
175	19	36	97	180	380	580	1190	1900	3400	7000
200	18	34	90	170	355	540	1100	1780	3200	6600
250	16	30	79	150	315	490	980	1600	2850	5900
300	14	26	71	140	285	445	900	1460	2600	5400

Table No.-3 80-F

Maximum capacity of pipe in cubic feet of gas per hour, based upon a pressure drop of 7 inches water column and .60 specific gravity gas.

Length in Ft.	NOMINAL PIPE OR I. D. TUBING SIZE										
	¼	⅜	½	¾	1	1¼	1½	2	2½	3	4
5	190	410	850	2300	2900	6600	9200	19000	30000	54000	110M
10	128	295	570	1540	2000	4200	6500	13000	20000	38000	80000
15	109	235	470	1200	1650	3400	5300	10800	17500	31000	64000
20	85	200	380	1030	1390	2900	4600	9300	15000	27000	55000
30	67	160	300	820	1150	2400	3700	7000	12000	22000	45000
40	57	125	255	700	1000	2100	3200	6500	10500	19000	39000
50	50	117	225	610	900	1850	2850	5800	9400	17000	35000
60	46	108	205	550	820	1700	2600	5400	8600	15500	31000
70	41	96	185	500	760	1600	2450	5050	8000	14000	29000
80	38	90	173	470	710	1500	2250	4700	7500	13000	27500
90	30	84	162	440	660	1400	2150	4400	7000	12500	26000
100	34	79	152	410	625	1300	2000	4150	6700	12000	25000
125	30	69	135	360	570	1150	1800	3700	6000	10500	22000
150	27	63	122	325	520	1080	1650	3400	5400	9800	20000
175	25	58	112	300	480	1000	1550	3100	5000	9000	18500
200	23	53	102	280	450	940	1450	2900	4750	8400	17000
250	20	47	90	240	400	850	1300	2600	4300	7500	15500
300	18	42	81	220	370	760	1150	2100	3900	7000	14000

Table No.-4 80-G

Maximum capacity of pipe in cubic feet of gas per hour, based upon a pressure drop of 1½ pounds per square inch and .60 specific gravity gas.

Length in Ft.	NOMINAL PIPE OR I. D. TUBING SIZE										
	¼	⅜	½	¾	1	1¼	1½	2	2½	3	4
5	540	1230	2400	6500	10500	21000	31000	58000	90000	150M	310M
10	369	850	1650	4350	7600	15000	22000	41000	64000	110M	220M
15	285	670	1280	3450	6200	12000	18000	34000	52000	90000	180M
20	240	570	1050	2950	5400	10500	15000	29000	45000	790M	150M
30	192	450	860	2300	4400	8600	13000	24000	36000	630M	125M
40	163	380	730	2000	3800	7500	11000	20000	32000	55810	110M
50	143	335	645	1750	3350	6700	9800	18000	28000	49000	97000
60	130	300	580	1580	3050	6100	9000	17000	26000	45900	90000
70	118	275	530	1430	2800	5600	8200	15000	24000	41000	82000
80	110	255	490	1330	2650	5200	7700	14000	22000	38000	77000
90	102	240	460	1230	2500	4900	7230	13500	21000	36500	72000
100	96	225	430	1160	2350	4700	6800	12500	20000	34500	70000
125	85	198	380	1025	2100	4150	6100	11300	18000	31000	62000
150	76	178	340	920	1900	3800	5600	10100	16000	28400	56000
175	69	164	315	845	1800	3550	5200	9700	15500	26000	53000
200	64	146	290	780	1700	3300	4900	9000	14000	24000	49000
250	58	140	255	690	1500	2950	4360	8100	12500	22600	44000
300	51	120	230	620	1350	2700	4000	7100	11500	19000	40000

Table No.-5 80-H

Multipliers to be used with tables when the specific gravity of the gas is other than used in Table.

Specific Gravity	Multiplier	Specific Gravity	Multiplier
.35	1.31	1.00	.775
.40	1.23	1.10	.740
.45	1.16	1.20	.707
.50	1.10	1.30	.680
.55	1.04	1.40	.655
.60	1.00	1.50	.633
.65	.962	1.60	.612
.70	.926	1.70	.594
.75	.895	1.80	.577
.80	.867	1.90	.565
.85	.841	2.00	.847
.90	.817	2.10	.535

Figure 80-1 is amended to read as follows:

Figure No. 1

Example to calculate a gas piping system based on pressure drop used in Table 2.

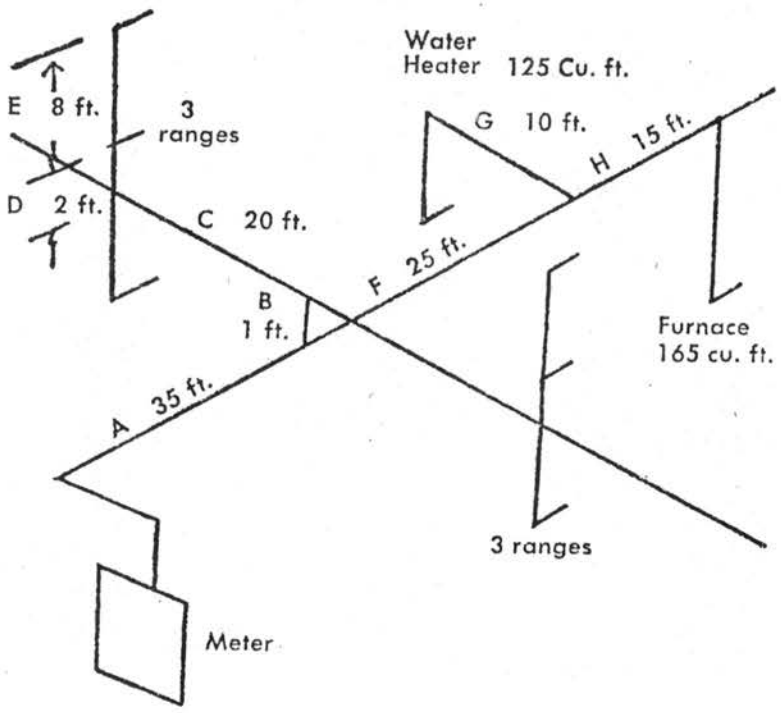

New Figure:

Figure No. 1 80-1

Example to calculate a gas piping system based on pressure drop used in Table 2.

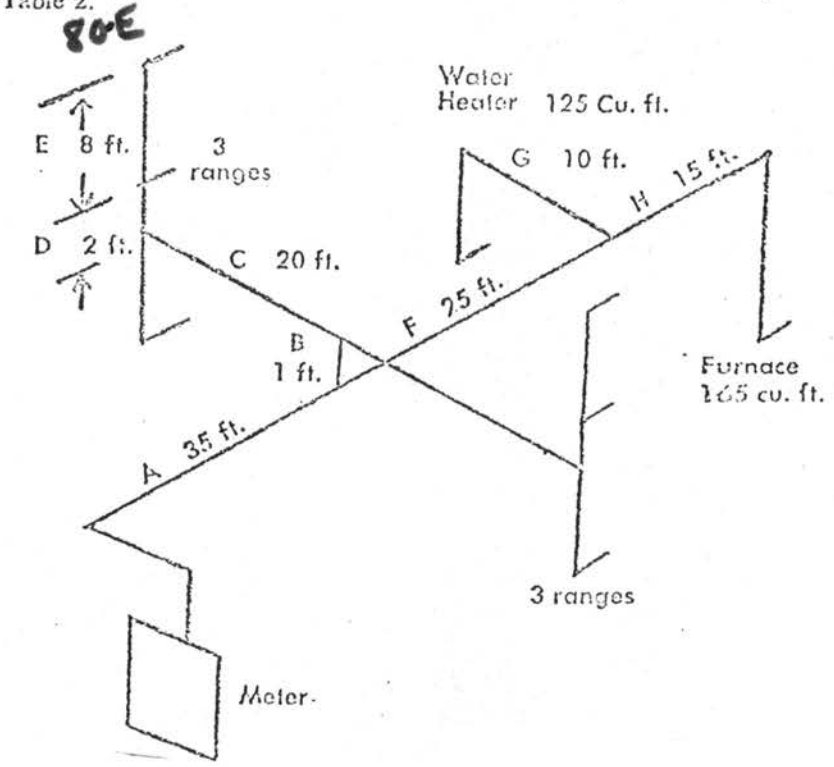

SBC 8101 is amended to read as follows:

Oil Burners. This chapter will be sub-divided into the following subjects:

SBC 8101 Definitions

SBC 8102 Approvals

SBC 8103 Fuel Oil

SBC 8104 Tanks

SBC 8105 Piping Controls Pumps and Valves

SBC 8106 Installation of Oil Burners and Oil Burner Equipment

SBC 8107 Kerosene Oil Stoves and Portable Heaters

SBC 8108 Inspection and Tests

SBC 8101 Definitions. The following terms shall mean:

Oil Burner. A device for burning oil in heating appliances such as boilers and furnaces or process equipment.

~~(1) A burner of this type may be furnished with or without a primary control.~~

~~(2) It may be a pressure atomizing gun type, a horizontal or vertical rotary type, or a mechanical or natural draft vaporizing type, air or steam atomizing type.~~

Oil Burning Equipment. An oil burner of any type together with its tank, piping, wiring, controls, and related devices ~~and shall include~~ including all oil burners, and oil-fired units.

Oil-Fired Unit. ~~A heating~~ An appliance equipped with one or more oil burners and all the necessary safety controls, electrical equipment, and related equipment manufactured for assembly as a complete unit.

SBC 8102 is amended to read as follows:

SBC 8102 Approvals. Approval of Oil Burner Required.

~~(1) No person shall install any domestic or commercial oil burner that does not carry the label of the Underwriter's Laboratories or any other nationally recognized testing laboratory.~~

1. Any oil burner bearing the approved label of the Underwriter's Laboratories or other nationally recognized testing laboratory may be installed without further approval providing such oil burner meets the appropriate requirements of the applicable sections of this Code, and such other requirements as established by the Approval Advisory Board.

~~(2) The administrative authority shall approve any oil burner listed by, or carrying the label of the Underwriter's Laboratory or any other nationally recognized testing laboratory, providing such oil burner also meets the approval requirements of the applicable chapter sections of this code.~~

2. Oil burning appliances not carrying the approval of the Underwriter's Laboratory or other nationally recognized testing laboratory shall not be installed without prior approval of the Approval Advisory Board.

3. Installation of Used Oil Burners. No person shall install a used burner for use in connection with a heating system unless he has furnished the administrative authority with a statement that said burner has been checked and found to be equivalent to new equipment in operation and safety, together with a letter from the purchaser acknowledging that said purchaser is buying a used oil burner. Such burner shall comply with all applicable sections of this code.

SBC 8103 Numbering has been editorially changed.

SBC 8103 Fuel Oil.

1. Grade. The grade of fuel oil used in a burner shall be that for which the burner is approved and as stipulated by the manufacturer. Crankcase oil or any oil containing gasoline shall not be used. NOTE: The label of Underwriter's Laboratories, Inc. ~~and Underwriters' Laboratories of Canada~~ stipulates for each burner the grade of fuel oil for which the burner is listed.

8103 cont

2. Heavy Oils, Where heavy oils are used, provision shall be made for maintaining the oil at the proper atomizing temperature. Automatically operated burners requiring the preheating of oil shall be arranged so that no oil can be delivered for combustion until the oil is at a suitable atomizing temperature.

3. Steam Coils in Oil Tanks. No steam coil operating at a pressure greater than 15 pounds per square inch gage shall be installed in an oil tank. When a pressure reducing valve is used to limit the steam pressure to 15 psi or less, a relief valve set at not more than 5 psi above the normal pressure in the coil shall be provided.

4. Flash Point. ~~(1)~~ The oil shall have a flash point not less than 100 degrees F. and shall be free from acid, grit, and fibrous or other foreign matter likely to clog or injure the burner or valves.

SBC 8104 is amended to read as follows:

SBC 8104 Tanks. Design, Construction and Installation of Fuel Oil Tanks.

The design, construction and installation of fuel oil tanks, both underground and inside buildings shall be in compliance with ~~Chapter 2, Section 20 to 26 of the State Fire Marshal's Flammable Liquids Code.~~ (NFPA Pamphlet 30-1973).

SBC 8105 is amended to read as follows:

SBC 8105 Piping, Controls, Pump and Valves.

~~(1)~~ 1. Piping. All piping shall be standard full weight wrought iron, steel, or brass pipe with standard fittings or approved brass or copper tubing with approved fittings except that approved flexible metal hose may be used for reducing the effects of jarring and vibration or where rigid connections are impracticable.

8105 Con't

~~(2)~~ 2. Pipe used in the installation of domestic type burners shall not be smaller than 3/8 inch iron pipe size; pipe used in the installation of industrial type burners shall not be smaller than 1/2 inch iron pipe size. Copper or brass tubing used in the installation of domestic type burners where the oil flows by gravity from the tank to the burners shall not be smaller in size than 3/8 inch outside diameter, .049 inch wall thickness tubing. For industrial type burners such copper or brass tubing shall not be smaller in size than the equivalent of the iron pipe size mentioned above, with wall thickness not less than .049 inch.

~~(3)~~ 3. Flexible metal hose shall be installed strictly in accordance with the limitations of its approval, and the manufacturer's recommendations.

~~(4)~~ 4. Piping shall be rigidly secured in place and protected from injury in a workmanlike manner, and where necessary, shall be protected against corrosion.

~~(5)~~ 5. Pipe joints and connections shall be made tight in a workmanlike manner. Unions and tubing fittings shall be of approved type.

~~(6)~~ 6. Proper allowance shall be made for expansion, contraction, jarring, and vibration. Pipe lines, other than tubing, connected to underground tanks, ~~except fill lines and test wells,~~ except vertical lines to grade shall be provided with double swing joints arranged to permit the tank to settle. ~~without impairing the efficiency of the pipe connections.~~

~~(7)~~ 7. Oil supply lines to burners shall be provided with ~~approved~~ properly sized strainers.

8. An antisiphon device shall be installed in the highest point of the suction oil line to prevent siphoning of oil through suction lines from supply tanks of oil burner systems in case of a break in the suction line.

9. Tank Vents.

~~(1)~~ A. Storage tanks shall be equipped with an open vent ~~or an approved automatically operated vent, arranged~~ to discharge to the open air. Vent openings and vent pipes shall be of ample size to prevent abnormal pressure in the tank during filling but not smaller than 1 1/4 inch pipe size.

~~(2)~~ B. Vent pipes shall be arranged to drain to the tank. The lower end of the vent pipe shall not extend through the top into the tank for a distance of more than one inch.

~~(3)~~ C. Vent pipes shall terminate outside of buildings at a point not less than 2 feet distant from any window or other building opening and not less than one foot above fill cap nor less than 2 feet above the ground. Outer ends of vent pipes shall be provided with a weatherproof hood to such a height that oil vapors discharging from the vent will be readily diffused without danger of ignition. ~~However, combination fill and vent fittings approved by the administrative authority may be used if located not less than 2 feet distant from any window or other building opening and not less than 2 feet above the ground.~~

~~(4)~~ D. Vent pipes shall not be cross-connected with fill pipes or return lines from burners.

~~(5)~~ E. Fill and vent pipes shall not be run through windows or coal-chutes unless such openings are totally enclosed with masonry to prevent oil from entering buildings during filling operations.

~~(6)~~ F. The vent size shall be as shown in Table ~~1.~~ 81-A.

10. Tank Fill and Overflow Pipes

~~(1)~~ A. Underground tanks and storage tanks inside buildings shall be filled only through fill pipes terminating outside of buildings at a point at least 2 feet from any building opening at the same or lower level. Fill terminals shall be closed tight, when not in use, by a metal cover designed to prevent tampering.

(2) B. Auxiliary tanks other than vacuum tanks shall be equipped with an over-flow pipe.

8165 CMC

~~(3)~~ C. Overflow pipes of auxiliary gravity tanks shall have no valves or obstructions. Overflow pipes of auxiliary pressure tanks shall be provided with inter-connected valves or other means for automatically venting the tank during filling.

D. A straight pipe to grade shall be installed on all underground tanks for the purpose of gauging and pumping out of the tank. This terminal shall be closed tight when not in use.

11. Oil Gauging.

~~(1)~~ A. All tanks in which a constant oil level is not maintained by an automatic pump shall be equipped with an approved method of determining the oil level.

~~(2)~~ B. Test wells shall not be installed inside buildings~~, and where permitted for outside services shall be closed tight when not in use by a metal cover designed to prevent tampering~~.

~~(3)~~ C. Gauging devices such as liquid level indicators or signals shall be installed so that oil or vapor will not be discharged into the fuel supply system.

~~(4)~~ D. No glass gauge, or any gauge the breaking of which will permit oil to escape from the tank, shall be used.

12. Oil Pumps.

~~(1)~~ A. Oil pumps shall be of approved type, secure against leaks, and shall be rigidly fastened in place.

~~(2)~~ B. Automatic pumps not an integral part of the burner shall be arranged to stop automatically in case of total breakage of the supply line to the burner if such line is pressurized.

~~(3)~~ C. In isolated locations, where fire protection equipment is dependent upon a heating plant fired by an oil burner, oil pumps supplying the burner shall be installed in duplicate.

13. Valves.

~~(1)~~ A. Readily accessible shut-off valves of approved type shall be installed in oil supply lines near each burner and close to gravity and pressure supply tanks. Shut-off or check valves of approved type shall be installed on each side of oil strainers which are not a part of the oil burner unit and on the discharge and suction side of oil pumps which pump directly to the burner but which are not a part of the burner unit.

8105 cont

~~(2)~~ B. Where a shut-off valve is installed in the discharge line of an oil pump, an approved pressure relief valve shall be connected into the discharge lines between the pump and the shut-off valve and arranged to return surplus oil to the storage tank or to by-pass it around the pump.

~~(3)~~ C. Control valves shall be of the approved type. Valves shall be designed to close against the supply and to prevent withdrawal of stem by continued operation of the handwheel. Packing affected by the oil or by heat shall not be used.

14. Gravity Feed to Burners.

~~(1)~~ A. Gravity feed shall be used only with burners arranged to prevent abnormal discharge of oil at the burner by automatic means specifically approved for the burner with which it is used.

~~(2)~~ B. ~~A~~ An inside domestic supply tank shall not have a capacity of more than ~~550~~ 265 gallons or two tanks of aggregate capacity of 550 gallons.

~~(3)~~ C. On multiple domestic tank installations, the fill pipe shall be so arranged that both tanks will fill equally and the vent pipe shall extend well above cross connections between tanks to prevent air binding when filling.

~~(4)~~ D. Where oil is supplied to the burner by gravity and a constant level device is not incorporated in the burner assembly or in an auxiliary tank used in connection with an automatic pump, an approved constant level device shall be installed in the oil feed line at the gravity tank or as close thereto as practicable. The vent opening of such constant level device shall be connected by piping or tubing to outside the building unless the constant level device is provided with an approved anti-flooding device. Vent pipes or tubing of constant level devices shall not be connected to tanks or tank vents.

15. Pressure Feed.

~~(1)~~ A. Pressure tank feed shall be used only with burners arranged to prevent abnormal discharge of oil at the burner by automatic means specifically approved for the burner with which it is used.

8105 Cont

16. Preheating Oil. Preheating of oil, where necessary, shall be done by steam, hot water or approved electric heater. Heaters shall be substantially constructed with all joints made oil tight. Thermometers shall be installed at suitable locations to indicate the temperature of the heated oil. Heaters shall be by-passed or provided with suitable means to prevent abnormal pressure.

17. Locking Fill Pipe. Whenever an oil burner is removed to be replaced with another fuel the "fill and vent" piping should be removed from the supply tank and those remaining openings of the supply tank be closed with "pipe-plugs" or complete removal of such supply tank.

18. Controls

~~(1)~~ A. Oil burner installations with burner inputs of less than 5 gallons of oil per hour shall have the following controls:

~~(a)~~ 1. A draft regulator.

~~(b)~~ 2. A stack relay or similar device providing positive shut-off for flame failure or failure to obtain ignition within 90 seconds after start of burner.

~~(c)~~ 3. A ~~high temperature~~ Separate operating and high limit control.

~~(2)~~ B. Oil burners having inputs of over ~~500,000 BTU~~ 3 gallons per hour shall be in accordance with Underwriters' Laboratories, Inc. and NFPA No. 31. 1992

~~(3)~~ C. Oil burners other than oil stoves with integral tanks, shall be provided with some means for manually stopping the flow of oil to the burner. Such device or devices shall be placed in a convenient location at a safe distance from the burner.

~~(4)~~ D. Each appliance fired by oil burners and each oil-fired unit shall be provided with automatic limit controls which will prevent unsafe pressure or low water in a steam boiler or over-heating within a hot-water boiler, furnace, or heater.

~~(5)~~ E. Limiting controls and low-water shutoffs intended to prevent unsafe operation of heating equipment by opening an electrical circuit to the burner or oil shutoff device shall be so arranged as to effect the direct opening of that circuit, whether the switching mechanism is integral with the sensing element or remote from same.

8105 cont

~~(6)~~ F. In systems where either steam or air is used for atomizing the oil or where air for combustion is supplied by a source which may be interrupted without shutting off the oil supply, the oil and atomizing or air supply shall be interlocked in a manner to immediately shut off the oil supply upon failure of the atomizing or air supply.

~~(7)~~ G. When automatically-operated burners are used in installations equipped with forced or induced draft fans or both, means shall be provided to immediately shut off the oil supply upon fan failure.

~~(8)~~ H. Oil burners operated automatically and having inputs of seven (7) or more gallons per hour shall have two control valves close against the oil supply pressure. These shall be separate and independent valves and shall be in series in the piping.

19. Dual Fuel Burners. Provisions shall be made to automatically prevent oil pump operation while ~~firing~~ OPERATING WITH the alternate fuel.

SBC 8106 is amended to read as follows:

SBC 8106 Installation of Oil Burners and Oil Burner Equipment

~~(1)~~ 1. Oil-fired appliances shall be installed in rooms that are large compared with the size of the appliance except that an appliance specifically approved for installation in a confined space such as an alcove or closet may be so installed when the installation is in compliance with the approval. In alcove and closet installations, the clearances from the appliance to the walls and ceiling shall be not less than as specified in the approval regardless of the type of construction.

~~(2)~~ 2. Oil burning appliances shall be installed so as to be reasonably safe to persons and property. Evidence that oil burning appliances have been installed in accordance with the applicable standard specified in this section shall be evidence that such oil burning appliances are reasonably safe to persons and property.

~~(3)~~ 3. Oil burners shall be securely installed in a workmanlike manner~~;-in-accordance-with-the-instructions-of-the-manufacturer;-by-qualified-mechanics-experienced-in-making-such installations.~~

8106 cont

~~(4)~~ 4. Where oil burners are installed in furnaces originally designed for solid fuel, the ash door of the furnace shall be removed or bottom ventilation otherwise provided to prevent the accumulation of vapors in the ash pit, unless the burner is of a type which mechanically purges the ash pit.

~~(5)~~ 5. Boilers and furnaces in which oil burners are installed shall be connected to flues having sufficient draft at all times to assure safe operation of the burner; a suitable draft regulating device shall be installed where necessary to prevent excessive draft. Manually operated dampers shall be such that they cannot close off more than 80% of the internal cross-section area of the smoke pipe. Automatically operated dampers shall be of approved type designed to maintain a safe damper opening at all times and arranged to prevent starting of the burner unless the damper is opened at least 20% of the internal cross-section area of the smoke pipe.

~~(6)~~ 6. Complete instructions for the care and operations of the oil burner equipment shall be conspicuously posted near the oil burner~~,. and shall be maintained in readable condition by user, and there shall be displayed, near the heating plant, a card which shall read as follows:~~

~~NOTE: This code requires that pipe dampers shall be removed or locked in the desired position and no damper closing off more than 80 percent of the pipe area shall be allowed. All check drafts must be kept closed at all times.~~

~~(7)~~ 7. Contractors installing industrial oil burner systems shall furnish diagrams showing the main oil lines and controlling valves, one of which shall be posted near the oil burner equipment and another at some point which will be accessible in case of fire at the burners.

8. The wiring diagram of the installation shall be supplied and posted near the furnace.

9. Accessibility, Clearance, and Permissible Temperatures

~~(1)~~ A. Accessibility for Service. Every oil-fired appliance shall be located with respect to building construction and other equipment so as to permit access to the appliance. Sufficient clearance shall be maintained to permit cleaning of heating surfaces; the replacement of filters, blowers, motors, burners, controls, and vent connections; the lubrication of moving parts where required; and the adjustment and cleaning of burners.

8106 Cont

~~(2)~~ B. Clearance and Permissible Temperatures. Every oil-fired appliance and its vent connector shall be installed with clearances to combustible materials as specified by the manufacturer of the equipment so that continued or intermittent operation will not create a hazard to person or property. They shall not, during operation, raise the temperature of unprotected combustible walls, partitions, floors or ceilings more than 90 degrees F. above normal room temperature when measured with mercury thermometers or conventional bead type thermocouples.

10. Combustion Air Requirements. The air required for combustion shall be in accordance with ~~Chapter 77~~ SBC 7704 of this code.

11. Calculating Heat Loss. All heat loss calculations shall be determined by the methods outlined in SBC 7303 of this code.

12. Electric Wiring. Electric wiring and equipment in connection with oil burning equipment shall be in accordance with the provisions of the State of Minnesota Electrical Code.

13. Modifications. Where the circumstances or conditions of any particular installation are unusual and such as to render the strict application of the provisions of this chapter impracticable, the administrative authority may permit such modifications as will provide a substantially equivalent degree of safety.

SBC 8107 Numbering has been editorially changed.

SBC 8107 Kerosene and Oil Stoves and Portable Kerosene Heaters.

1. General Precautions.

~~(1)~~ A. The safety of installation and use of appliances of this kind depend largely upon the care of the installer and the care of the user in following the manufacturer's operating and installation instructions.

~~(2)~~ B. Appliances of this class shall be kept clean and in good repair. If parts become worn or damaged they shall be replaced promptly, preferably by the manufacturer or his representative. Where replacements or repairs must be made by the user, such attention shall be strictly confined to procedures which have been fully covered by the manufacturer's printed instructions.

~~(3)~~ C. Instructions furnished by the manufacturer shall be preserved.

~~(4)~~ D. Special care must be employed in the placing of kerosene stoves and portable kerosene heaters in order to avoid contact with combustible material including draperies and to avoid accidental overturning. Placing fabrics on stoves for drying is dangerous.

~~(5)~~ E. Appliances shall be installed on noncombustible flooring unless listed for installation on combustible flooring.

~~(6)~~ F. A range shall be equipped with a drip pan beneath the burners and with integral base or legs to locate the cooking surface at a proper height for ordinary use.

~~(7)~~ G. Portable kerosene heaters shall be equipped with a sheet metal tray underneath the burner as an integral part of the heater.

~~(8)~~ H. Stoves shall be placed so that curtains or draperies may not be blown over or into contact with heater surfaces or open flame.

~~(9)~~ J. Appliances shall be carefully leveled in accordance with manufacturer's installation instructions.

~~(10)~~ K. When manufacturer's instructions specify that stoves are to be fastened to the floor these instructions shall be carefully followed, but in all cases stoves supplied with fuel from separate supply tanks shall be securely attached to the floor or otherwise secured in position to avoid strains on piping.

2. Controls. Kerosene and oil stoves and portable kerosene heaters shall be equipped with a primary safety control furnished as an integral part of the appliance by the manufacturer to stop the flow of oil in the event of flame failure. Barometric oil feed shall not be considered a primary safety control. NOTE: Stoves and heaters listed by Underwriters' Laboratories, Inc. and Underwriters' Laboratories of Canada are so equipped.

3. Flue Connections. Appliances that are provided with a flue outlet shall be connected to a suitable flue having sufficient draft at all times to assure safe operation of the appliance.

4. Supply Tanks.

~~(1)~~ A. Stoves designed for barometric oil feed shall not be connected to separate supply tanks.

~~(2)~~ B. Stoves which are not designed for flue connection shall be equipped with integral tanks having capacity of not more than two gallons.

~~(3)~~ C. An oil stove specifically designed and listed for use with separate supply tanks may be directly connected for gravity feed from a supply tank or an automatic pump.

~~(4)~~ D. The filling of barometric tanks and kerosene stove tanks and reservoirs of portable kerosene heaters shall be done outside buildings or at a special location where precautions can be taken to minimize the spilling of oil.

~~(5)~~ E. A barometric tank shall not be placed in position in the stove sump until the oil has reached room temperature.

5. Clearances and Mounting.

~~(1)~~ A. Stoves shall be installed to provide clearances to combustible material not less than as shown in Table ~~7~~ 81-B.

~~(2)~~ B. Stoves which are listed for installation with lesser clearances than specified in Table ~~7~~ 81-B may be installed in accordance with their listing.

~~(3)~~ C. Stoves may be installed with lesser clearances to combustible material provided the combustible material is protected. In no case shall the horizontal distance be less than six inches from a range to that portion of adjacent unprotected combustible walls or cabinets extending above the cooking top of the range.

~~(4)~~ D. Stoves which have a fuel tank attached thereto, shall in all cases be installed with sufficient clearance to provide direct and easy access to the fuel tank.

~~(5)~~ E. Stoves shall have a clearance vertically above the top of not less than 30 inches to combustible material or cabinets. When the underside of combustible material or cabinets is protected by asbestos millboard at least 1/4 inch thick covered with sheet metal not lighter than 28 gauge, the distance shall be not less than 24 inches. The protection shall extend 9 inches beyond the sides of the stove.

~~(6)~~ F. Listed stoves may be placed on combustible floors. Others shall be placed on the ground, on noncombustible floors, or on floors protected in accordance with accepted building code practice.

SBC 8108 Numbering has been editorially changed.

SBC 8108 Inspection and Tests.

1. Tests of Covered Tanks and Piping. After installation and before being covered tanks of 1,000 gallons capacity or more, and piping shall be tested hydrostatically, or with equivalent air pressure, at a pressure not less than 1 1/2 times the maximum working pressure but not less than 5 pounds per square inch at the highest point of the system. Instead of a pressure test, suction lines may be tested under a vacuum of not less than 20 inches of mercury. Such tests shall be made by the installer.

~~(7)~~ 2. Tanks and Piping. Immediately upon the installation of the tanks and piping of an oil burner installation, the installer thereof shall notify the administrative authority that said tanks and piping are ready for inspection and tests as required in this chapter. No person shall cover up any such tank or piping until the same shall have been inspected and approved.

~~(2)~~ 3. ~~Oil-Burner-Inputs-of-Less-than-500,000-BTU-Per-Hour.~~ Upon completion of the test of any oil burner installation and placing the equipment in operation, the installer shall file with the administrative authority complete records of such test stating the date of test and name of person performing the test.

~~(3)~~ 4. Oil burners having inputs of over ~~500,000-BTU~~ seven gallons per hour shall be tested as required by the administrative authority. The tests required therein shall be witnessed by the authority prior to placing the burner in service. The installer shall file with the administrative authority a copy of the test report, signed by the installer or his authorized agent performing the test.

Tables are editorially changed.

TABLE No. 1 81-A

Capacity of Tank U.S. Gallons	Approx. Imperial Gallons	Diameter of Vent, Iron Pipe Size
500 or less	500 or less	1¼ inches
501 to 3,000	501 to 2,500	1½ inches
3,001 to 10,000	2,501 to 8,300	2 inches
10,001 to 20,000	8,301 to 16,600	2½ inches
20,001 to 35,000	16,601 to 29,000	3 inches

NOTE: Where tanks are filled by the use of a pump through tight connections, special consideration should be given to the size of the vent pipe to insure that it is adequate to prevent the development of abnormal pressure in the tank during filling. This may be accomplished by providing a vent pipe not less in size than the discharge of the pump.

TABLE No. 1 81-B

	Minimum Clearance, Inches		
Heating Appliances	Sides	Rear	Chimney Connector
Room Heater, Circulating type	12	12	18
Room Heater, Radiant type	36	36	18

SBC 8201 is amended to read as follows:

SBC 8201 Stoker and Coal Fired Installations. Standards Established. The arrangement, equipment, and manner of installation of all stokers installed ~~for use in connection with heating plants~~ and the alterations of all such stoker installations shall conform to the provisions of this chapter.

SBC 8202 is amended to read as follows:

SBC 8202 Stoker Defined. The term "stoker" shall mean a mechanical device for feeding solid fuel into the combustion chamber ~~of a boiler or furnace used in connection with a heating plant~~ whether automatically or manually controlled.

SBC 8203 is amended to read as follows:

SBC 8203 Approval of Stoker Required.

~~(1) No person shall install any stoker that does not carry the approval label of a nationally recognized testing laboratory.~~

~~(2)~~ The administrative authority shall approve any stoker ~~listed by or carrying the label of a nationally recognized laboratory~~ providing such stoker also meets the approval requirements of the applicable chapter sections in this Code.

SBC 8205 Editorial changes.

SBC 8205 Calculating Heat Loss. All heat loss calculations shall be determined by the methods outlined in ~~Chapter 73~~ SBC 7300 of this Code.

13

SBC 8206 is amended to read as follows:

SBC 8206 Non-Automatic Stokers Restricted. Stokers which are not equipped with automatic means of preventing excessive pressures or temperatures ~~of the heating medium~~ shall not be installed or operated in any location where a competent attendant will not be constantly on duty on the premises while the stoker is in operation.

SBC 8207 is amended to read as follows:

SBC 8207 Automatic Controls

~~(1)~~ 1. Except as provided in SBC 8206, each mechanical stoker shall be equipped with at least one high limit control so connected as to shut off power from stoker drive in the event of excessive pressure in a steam boiler or excessive temperature in a hot water boiler or warm air furnace casing. Each steam boiler shall be equipped with a low water cut-off.

~~(2)~~ 2. Where there may be an over run of heat due to sustained periods of operation for the stoker, a reserve action control or equivalent control shall be installed in hot water systems so as to relieve this condition.

~~(3) On all installations where operation of burner is controlled by an aquastat, pressurestat, or furnacestat, a second control, either aquastat, pressurestat, or furnacestat, shall be installed in the 110 volt line ahead of all controls, as a high limit of safety control.~~ 3. Each stoker shall have separate operating and limit controls.

SBC 8208 Numbering has been editorially changed.

SBC 8208 Stoker Capacity, Setting Heights, Combustion Space

~~(1)~~ 1. The capacity of a stoker for any given installation shall be in accordance with the manufacturer's recommended load carrying capacities.

~~(2)~~ 2. The distance from retort to crown sheet and the space for combustion, within any boiler or furnace, shall be such as to secure efficient smokeless combustion. Where stokers are installed in old boilers and strict compliance with the foregoing requirements cannot be met, minor modifications may be made, subject to the approval of the administrative authority.

SBC 8210 Editorial Changes.

SBC 8210 Combustion Air Requirements. Combustion air shall be sized and installed in accordance with ~~Chapter 78~~ SBC 7700 of this Code.

22

SBC 8211 is amended by adding a new section to read as follows:

SBC 8211 The venting of coal burning equipment shall be as required in SBC 7400.

3

8301 – N.C.

SBC 8302 Has been editorially changed.

SBC 8302 Equipment and Installation Requirements.

1. Electrical heat generating and emission units and other electrical equipment, along with their installations and associated wiring, shall comply with provisions of ~~Chapter-86~~ SBC 8600 (Electrical) of the State Building Code. In addition, electric heat generating and emission units shall be listed by Underwriters Laboratories, Inc. or shall bear the label of the Underwriters Laboratories, Inc. or other nationally recognized testing laboratories. Lamps, heat lamps, infra-red lamps and tubes that do not carry a UL approval will be accepted.

2. All systems and appliances shall be installed in complete compliance with the manufacturers requirements and specifications.

SBC 8303 Has been editorially changed.

SBC 8303 Heat Loss Calculations. Heat loss calculations shall be made in accordance with the provisions set forth in ~~Chapter-73~~ SBC 7300 of this Code.

8304. N.C.

SBC ~~8306~~ 8305 Has been editorially changed.

SBC ~~8306~~ 8305 Other Requirements.

1. Central heating systems of the warm air type shall have their rating as established in ~~Chapter-75~~ SBC 7500 Warm Air Heating of this Code.

2. Central heating systems of the steam or hot water type shall have their rating as established in ~~Chapter-76~~ SBC 7600 Steam and Liquid Systems, of this Code.

3. An automatic temperature control system shall be provided for the heated space unless otherwise approved by the administrative authority.

SBC 8401 Has been editorially changed.

SBC 8401 Fireplaces and Incinerators. Factory Built Fireplaces. Factory built fireplaces shall be listed and shall be installed in accordance with conditions of their listing. Hearth extensions shall be provided in accordance with SBC ~~8404~~ 8403.

SBC 8402 is amended to read as follows:

SBC 8402 Factory Built Fireplace Stoves. Factory built fireplace stoves and chimneys shall be listed by an Approved Agency and shall be installed in accordance with the conditions of the listing. ~~Hearth extensions shall be provided in accordance with SBC 8404. (The requirement to be listed in SBC 8402 and SBC 8403 shall mean that the appliance has been tested and approved by the Underwriters' Laboratory or other nationally recognized testing laboratory).~~

SBC 8403 is amended to read as follows:

SBC 8403 Masonry Fireplaces. All masonry fireplaces shall be constructed and built in accordance with ~~Chapter 84~~ (UBC - Section 3707) of the State Building Code. ~~A.~~ Warm air ducts employed with steel fireplace units of the circulating air type shall be constructed of metal or masonry.

~~B. Fireplace hearth extensions shall be provided of approved noncombustible material for all fireplaces. Where the fireplace opening is less than 6 square feet, the hearth extension shall extend at least 16 inches in front of, and at least 8 inches beyond each side of the fireplace opening. Where the fireplace opening is 6 square feet or larger the hearth extension shall extend at least 20 inches in fron of, and at least 12 inches beyond each side of the fireplace opening. Where a fireplace is elevated above or overhangs a floor, the hearth extension shall also extend over the area under the fireplace.~~

~~C. Fireplaces constructed of masonry or reinforced concrete shall have hearth extensions of brick, concrete, stone, tile or other noncombustible approved material properly supported and with no combustible material against the underside thereof. Wooden forms or centers used during the construction of the hearth and hearth extensions shall be removed when the construction is completed.~~

~~D.-Hearth-extensions-of-approved-factory-built-fireplaces-and fireplace-stoves-shall-be-not-less-than-3/8-inch-thick-of-asbestos,-concrete,-hollow-metal,-stone,-tile-or-other-approved non-combustible-material.--Such-hearth-extensions-may-be-placed-on-the-sub-or-finish-flooring-whether-the-flooring-is-combustible-or-not.--The-hearth-extension-shall-be-readily-distinghishable-from-the-surrounding-floor.~~

SBC 8404, 8405, 8406, 8407, 8408, 8409, 8410 and 8411 are deleted in their entirety and the following inserted in lieu thereof:

SBC ~~8405~~
8404 Incinerators. All incinerators shall meet the requirements and have approval of the Minnesota Pollution Control Agency not withstanding any provisions of this Code.

~~SBC-8406~~ 1. Clearance

~~(a)~~ A. Incinerators shall be installed in accordance with their listing and the manufacturer's instructions, provided that in any case the clearance shall be sufficient to afford ready accessibility for firing, cleanout and necessary servicing.

~~(b)~~ B. The clearance above a charging door to combustible material shall be not less than 48 inches. The clearance may be reduced to 24 inches provided that the combustible material is protected with sheet metal not less than No. 28 manufacturer's standard gage spaced out 1 inch on noncombustible spacers, or equivalent protection. Such protection shall extend 18 inches beyond all sides of the charging door opening. Listed incinerators designed to retain the flame during loading need not comply with this paragraph.

~~(c)-Incinerators-shall-be-installed-with-clearances-to combustible-material-of-not-less-than-36-inches-at-the sides-and-top-and-not-less-than-48-inches-at-the-front, but-in-no-case-shall-the-clearance-above-a-charging-door-be-less-than-48-inches.--Unlisted-wall-mounted-incinerators-shall-be-installed-on-a-noncombustible-wall-communicating-directly-with-a-chimney.~~

~~(d)~~ C. Domestic type incinerators may be installed with reduced clearances to combustible material in rooms, provided the combustible material is protected as described. In confined spaces, such as alcoves, clearance shall be so reduced.

~~(e)~~ D. When a domestic type incinerator that is refractory lined or insulated with heat insulating material encased in common brick not less than 4 inches in thickness, the clearances may be reduced to 6 inches at the sides and rear, and the clearances at the top may be reduced to 24 inches provided that the construction using combustible material above the charging door, and within 48 inches is protected with No. 28 standard gauge sheet metal spaced out 1 inch, or equivalent protection.

SBC-~~8407~~ 2. Mounting

~~(a)~~ A. Listed incinerators specifically listed for installation on combustible floors may be so installed.

~~(b)~~ B. Incinerators shall be mounted on the ground or on floors of fire-resistive construction with noncombustible flooring or surface finish with no combustible material against the underside thereof, or on fire-resistive slabs or arches having no combustible material against the underside thereof. Such construction shall extend not less than 12 inches beyond the incinerator base on all sides except at the front or side where ashes are removed where it shall extend no less than 18 inches beyond the incinerator.

~~(c)~~ C. Incinerators may be mounted on floors ~~other than as specified in (b) preceding~~ provided the incinerator is so arranged that flame or hot gases do not come in contact with its base and, further, provided the floor under the incinerator is protected with hollow masonry not less than 4 inches thickness, covered with sheet metal not less than 24 standard gauge. Such masonry course shall be laid with ends unsealed and points matched in such a way as to provide a free circulation of air ~~from side to side~~ through the masonry. The floor for 18 inches beyond the front of the incinerator or side where ashes are removed and 12 inches beyond all other sides of the incinerator shall be protected with not less than 1/4 inch asbestos millboard with sheet metal of not less than No. 24 standard gauge or with protection equivalent thereto.

~~(d)~~ D. Incinerators which are set on legs that provide not less than 4 inches open space under the base of the appliance may be mounted on floors other than as specified in ~~(b)~~ B preceding provided the appliance is such that flame or hot gases do not come in contact with its base, and further provided the floor under the appliance is protected with asbestos millboard not less than 1/4 inch thick covered with sheet metal of not less than No. 24 standard gauge. The above specified floor protection shall extend not less than 18 inches beyond the front of the incinerator or side where ashes are removed and 12 inches beyond all other sides of the incinerator.

~~SBC-8408~~ 3. Draft Hood Prohibited. Draft hoods shall not be installed in the vent connector of an incinerator.

~~SBC-8409~~ 4. Vent Connector Clearance. Vent connectors shall have at least 18 inches clearance from combustible material and shall not pass through combustible walls unless guarded at the point of passage as specified in ~~Table 7, Chapter 7~~ SBC 7409 Table 74-G of this Code.

~~SBC-8410~~ 5. Vent Connector Material. The vent connector from an incinerator to a chimney shall be galvanized steel to a thickness at least No. 24 standard gauge or of a material having equivalent or superior heat and corrosion resistant properties and the joints shall be secured by sheet metal screws.

~~SBC-8411~~ 6. Chimneys. All incinerators shall have their chimneys in compliance with ~~Chapter 7~~ SBC 7403 ~~- 6F and 7B~~ of this Code and the applicable sections of the State Building Code.

SBC 8501 Numbering has been editorially changed.

SBC 8501 Fire Control. General Regulations.

~~(1)~~ 1. Scope. The provisions of this chapter shall apply to design, construction, and installation of fire dampers, smoke dampers and fire control assemblies in duct systems, in inlets to or outlets from duct systems or ventilating openings (transfers) where such ducts penetrate or for openings that are provided in fire walls, fire partitions or in fire resisting wall and ceilings and floor or roof assemblies. See NFPA No. 90A Standard for the Installation of Air Conditioning and Ventilation Systems. 1972

~~(2)~~ 2. Equipment and Assemblies Approved. Fire dampers, fire doors and other fire control assemblies required under this chapter, for which the Underwriters' Laboratories, Inc. provides testing and approval service, shall be tested, approved and listed by the Underwriters' Laboratories Inc. or shall be approved by the administrative authority. When such dampers and equipment are not listed by Underwriters' Laboratories, the administrative authority shall require tests to be performed by a qualified, independent laboratory where there are test procedures established, and may require such tests as he deems necessary for equipment and assemblies for which no standard test is provided in order to determine the acceptability of any such fire damper, smoke damper or control assembly.

SBC 8502 Numbering has been editorially changed.

SBC 8502 Fire Control Assemblies Required.

~~(1)~~ 1. Fire Walls. Where ducts, or the outlets from or inlets to them pass through a fire wall or where a ventilating opening (transfer) exists in a fire wall, they shall be provided with an automatic fire assembly approved for the protection of openings in fire walls (Class A openings) on both sides of the wall through which the opening exists.

~~(2)~~ 2. Fire Partitions. Where ducts or the outlets from or inlets to them pass through a fire partition or fire enclosure of a vertical shaft, or where a ventilating opening (transfer) exists in a fire partition or fire enclosure of a vertical shaft, they shall be provided with an approved automatic fire damper, except as otherwise provided herein.

~~(3)~~ 3. Fire Resisting Walls. Openings in fire resisting walls other than fire walls, fire partitions and required shaft enclosures shall be protected as provided herein.

~~(a)~~ A. Walls Requiring a Fire Resistance of More than One Hour. Where ducts or outlets from or inlets to them pass through walls which are required to have a protection of more than one hour, or where a ventilation opening (transfer) is provided in such wall, such opening shall be protected with approved fire dampers.

~~(b)~~ B. Walls Requiring a Fire Resistance of One Hour or Less. Where outlets from or inlets to duct systems are provided in walls which are required to be fire resisting with a rating of one hour or less and are required for area separation and where ventilation openings (transfer) are provided in such walls, such openings shall be protected with approved fire dampers.

~~(4)~~ 4. Fire Resisting Ceilings. Where inlets to or outlets from a duct system are provided in fire resisting ceilings which are part of a required fire resisting ceiling and floor or roof assembly, such inlets or outlets shall be protected in accordance with the approved design.

~~(5)~~ 5. Fire Resisting Floors. Where ducts pass through a fire resistive floor, approved fire dampers shall be provided, except as otherwise herein provided and except when such ducts are encased or enclosed in a shaft as provided in NFPA No. 90A. 1972

~~(6)~~ 6. Ducts Serving Two or More Floors. Where a duct system serves two or more floors, approved automatic fire dampers shall be provided at either, each direct outlet or inlet in the enclosure for a main vertical duct, or at each point where such main vertical duct pierces the enclosure for a main vertical duct when such enclosure is required for the protection of vertical openings in the building.

SBC 8503 Numbering has been editorially changed.

SBC 8503 Fire Dampers Not Required.

~~(1)~~ 1. Fire dampers are not required in branch ducts or in ducts that pierce the floor at one place only, when such ducts are less than 20 square inches in area and supply air conditioning units in one story only that discharge air at not over 4 feet above the floor.

~~(2)~~ 2. Fire dampers are not required in ducts serving small buildings with unprotected floor openings and in duct systems serving only one floor and used only for the exhaust air to the outside and which do not penetrate a fire wall or fire partition or pass entirely through the enclosure of a vertical shaft.

~~(3)~~ 3. Fire dampers are not required where branch ducts connect to a return riser in which the flow is upward and subducts at least 22 inches in length are carried up inside the riser from each outlet (See NFPA No. 90A). 1972

SBC 8504 Numbering has been editorially changed and a new section added to read as follows:

SBC 8504 Construction and Installation of Control Assemblies.

~~(1)~~ 1. Automatic Fire Door .

~~(a)~~ A. Fire doors shall be approved for the protection of openings in fire walls (Class A openings). See NFPA No. 80 Fire Doors and Windows.

1970

~~(b)~~ B. Fire doors shall be arranged to close automatically and shall remain tightly closed during the fire. Fire doors shall be so arranged that the disruption of the duct will not cause a failure in the protection of the fire wall opening. Fire doors required in this chapter shall close upon the operation of an approved fusible link or other approved heat actuated device located where readily affected by an abnormal rise in the temperature in the duct or opening. Such fusible link or device should have a temperature rating of approximately 50 degrees F. above the maximum temperature that would normally be encountered with the system in operation or shut down.

~~(c)~~ C. Suitable access openings (hand holes) shall be provided to make all fire doors accessible for inspection and servicing.

~~(2)~~ 2. Automatic Fire Dampers.

~~(a)~~ A. Fire dampers shall have a 1 1/2 hour standard fire protection rating in accordance with NFPA No. 252 Standard Method of Fire Tests of Door Assemblies, except for dampers protecting openings in rated fire resisting ceilings which shall be in accordance with the approval. Fire dampers used for the protection of ventilating openings (transfers) in fire resisting walls shall be approved by the administrative authority.

~~(b)~~ B. Fire dampers shall be arranged to close automatically, remain in a closed position and provide the maximum practical barrier to the passage of air when in the closed position. They shall be so arranged as to stay in place at the protected opening even if the duct should be disrupted during the fire. Automatic closing of the fire damper shall be effected by the operation of an approved fusible link or other approved heat actuated device located where readily affected by an abnormal rise in temperature in the duct space or opening. Such fusible link should have a temperature rating approximately 50 degrees F. above the maximum temperature that would normally be encountered with the system in operation or shut down.

~~(c)~~ C. Fire dampers shall be corrosion resistant and when installed in ducts used solely for exhaust air to the outside shall be installed in such a way that they will not interfere with the flow of air in the main duct.

~~(d)~~ D. Suitable access openings (hand holes) shall be provided to make all fire dampers accessible for inspection and servicing.

E. Illustrations of Required Method of Installation of Fire Dampers. All installations shall be made in accordance with Figures 85-1 through 85-5 or deviations must be reviewed and approved by the administrative authority.

SBC 8505 is deleted in its entirety and the following inserted in lieu thereof:

SBC 8505 System Controls Required.

1. Each installation shall be equipped with a manual emergency stop, located at a conveniently accessible point, for quick shutting down of the fan in case of fire. This location shall be approved by the administrative authority.

2. In systems between 2,000 CFM and 15,000 CFM capacity, fans shall be arranged to shut down automatically when the temperature of the air in the system becomes excessive, as from a fire. For this purpose, approved fixed temperature thermostatic devices shall be provided as follows:

   A. With a setting not in excess of 136 degrees F., at a suitable location in the return air stream prior to exhausting from the building or being diluted by outside air.and,

   B. With a setting not in excess of 50 degrees F. above the maximum operating temperature, at a suitable location in the main supply duct on the downstream side of the filters. Either the thermostatic device shall be of a type that is manually reset or the control system shall be so arranged that some manual operation is required to restart the fan after the thermostatic device has operated. Smoke detectors approved for duct installation may be used in lieu of thermostatic devices.

3. In systems of over 15,000 CFM capacity, smoke detectors approved for duct installation shall be installed and arranged to automatically shut down fans. For this purpose, smoke detectors approved for duct installation shall be provided as follows:

   A. At a suitable location in the return air stream prior to exhausting from the building or being diluted by outside air.and,

   B. At a suitable location in the main supply duct on the downstream side of the filters. Smoke dampers shall be installed in such a manner as to restrict circulation of smoke, and arranged to close automatically when the system is not in operation, and also by operation of the smoke detecting apparatus and by the manual emergency fan stop. Usually circulation of smoke can be restricted by installation of smoke dampers in the main supply and return ducts.

4. In lieu of the automatic fan shutdown specified in SBC 8505-2 and 3, systems may incorporate automatic exhaust when acceptable to the administrative authority.

5. In systems of 15,000 CFM capacity and under, effective means of detecting and controlling the spread of smoke in air conditioning systems is recommended in premises where the panic hazard in pronounced or where there are valuable contents particularly subject to smoke damage (see also SBC 8505-3).

6. Fire and smoke detectors covered by this Standard are not to be construed as a substitute for complete area protection afforded by an approved fire detection system as covered by NFPA No. 71, 72A, 72B, 72C and 72D. When such an approved fire detection system is installed in the building, the fire and smoke detectors in SBC 8505-2,3, and 4 shall be connected thereto in accordance with approved practice so that actuation of any fire and smoke detector will sound the fire alarm as well as provide the function of controlling the ventilation systems.

FASTENING OF DAMPERS TO SLEEVES

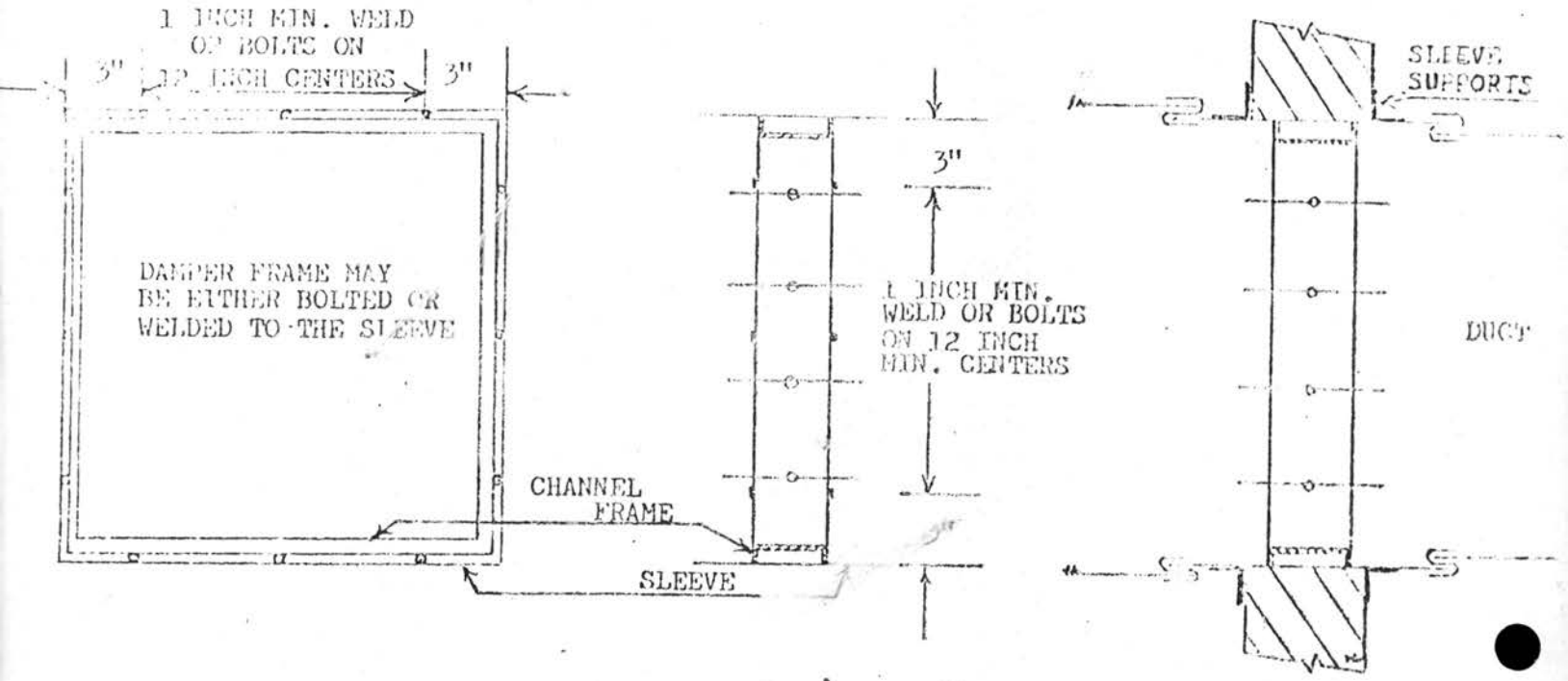

FIG 85-1

NOTES:

1. DAMPER FRAMES ARE TO BE FASTENED TO THE FIRE DAMPER SLEEVE BY WELDING OR BOLTING IN THE MANNER SHOWN IN THIS DETAIL. BOLTS OR WELDS SHALL BE LOCATED WITHIN 3 INCHES OF THE CORNER AND INTERMEDIATE FASTENINGS SHALL BE LOCATED ON A MAXIMUM OF 12 INCH CENTERS.

2. SLEEVES:
THE MINIMUM GAUGE (MANUFACTURES' STANDARD GAUGE OR GALVINIZED SHEET GAUGE) OF SLEEVES SHALL BE SHOWN AS 16 GAUGE FOR DAMPERS WITH DIMINSIONS NOT EXCEEDING 24 INCHES IN HEIGHT OR 36 INCHES IN WIDTH AND 14 GAUGE FOR LARGER SIZES. THE CONNECTING DUCTS SHALL NOT BE SHOWN AS CONTINUOUS, BUT SHALL BE SHOWN TO TERMINATE IN THE SLEEVES.

TYPICAL INSTALLATION OF A FIRE DAMPER WHERE IT IS FOUND TO BE IMPOSSIBLE TO INSTALL THE DAMPER IN THE WALL ITSELF

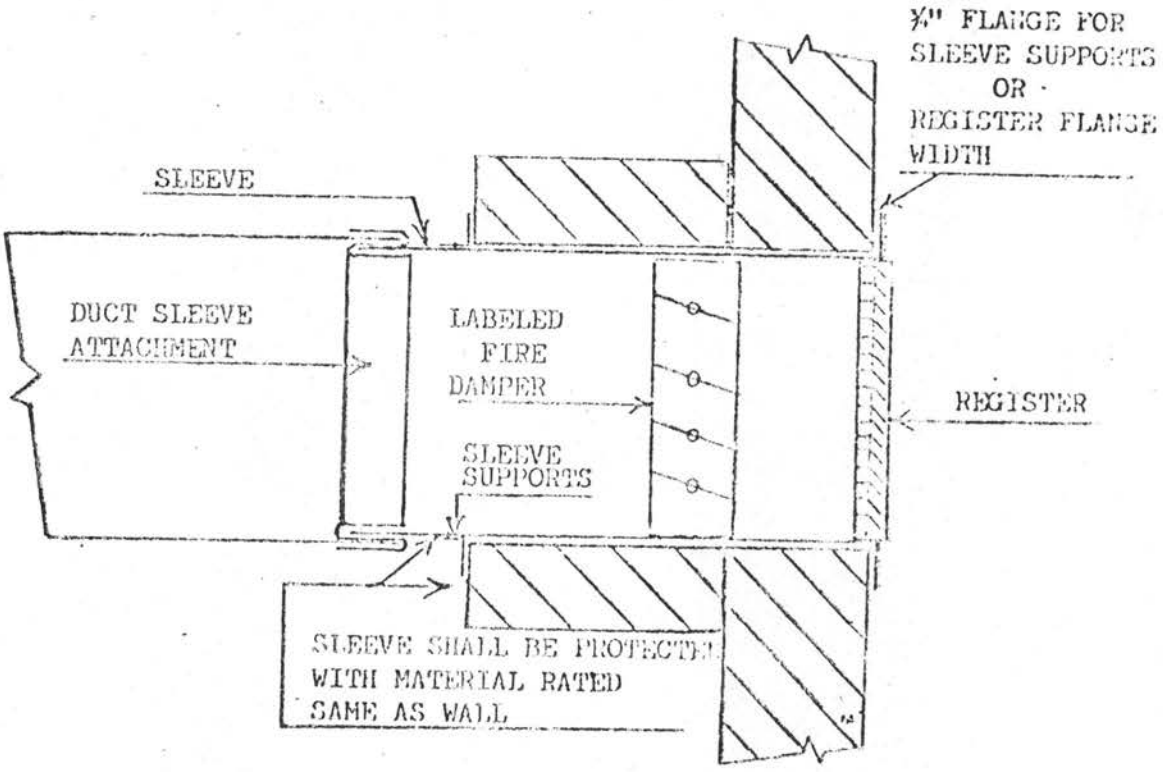

FIG 85-2

NOTES:

1. THIS REPRESENTS AN EXCEPTION WHICH IS ACCEPTED ONLY WHEN IT IS IMPOSSIBLE TO INSTALL THE DAMPER IN THE WALL. THIS SOMETIMES OCCURS WHEN THE DUCT TERMINATES AT THE WALL FOR A REGISTER, DIFFUSER OR GRILLE.
2. THE PROPER GAUGE STEEL SLEEVE SHOULD BE GIVEN A 90° FLANGE THAT WILL OVERLAP THE WALL SURFACE TO MATCH THE DIFFUSER FRAME.
3. RETAINING ANGLE IRONS SHOULD BE INSTALLED ON THE OPPOSITE SIDE TO SECURE THE SLEEVE INTO THE WALL.
4. THE SLEEVE MUST BE PROTECTED WITH THE SAME OR MATERIAL EQUAL AS THE RATED WALL CONSTRUCTION. SLEEVE SHALL NOT BE USED AS SUPPORT OF PROTECTION MATERIAL.

TYPICAL 2 HOUR FLOOR AND CEILING ASSEMBLY INCORPORATING FIRE RESISTIVE CEILINGS. NORMAL BAR JOIST CONSTRUCTION.

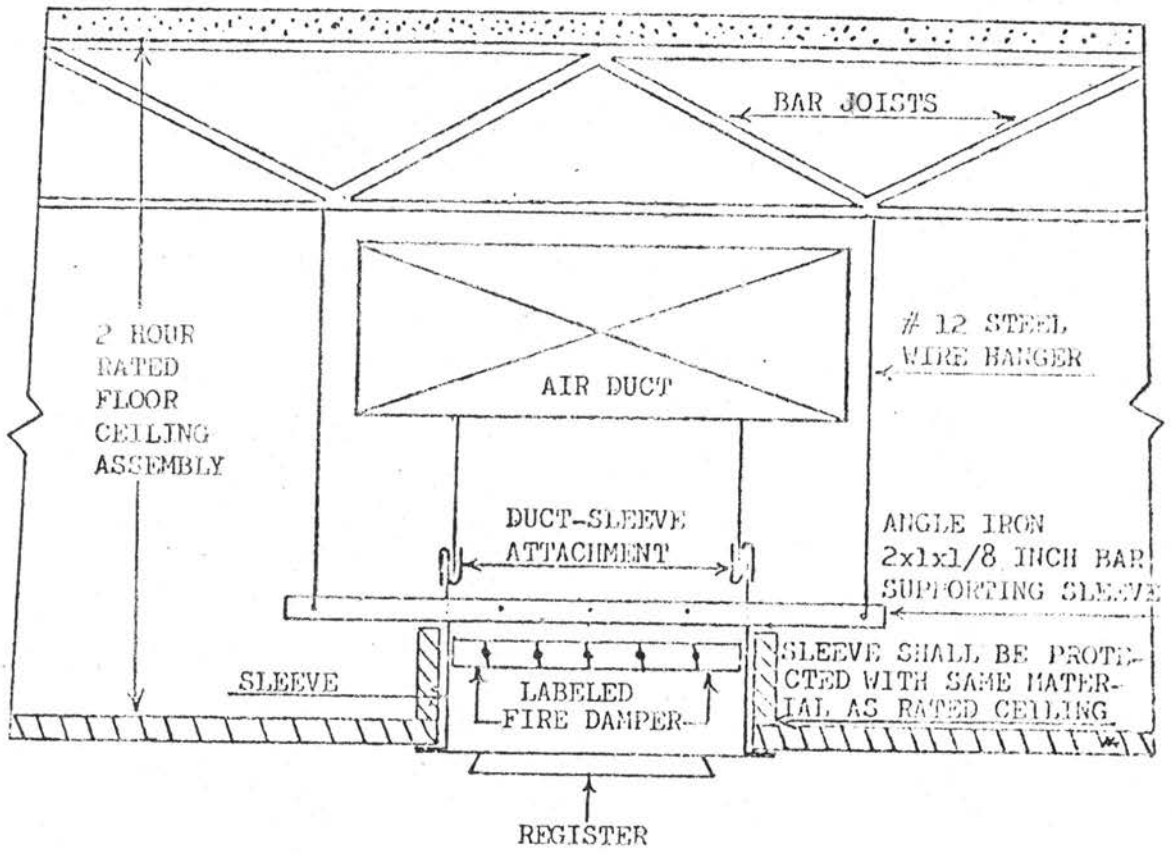

FIG 85-3

NOTES:

1. CONTINUITY OF FIRE RESISTIVE CEILING MUST BE MAINTAINED BY FIRE DAMPER.
2. DAMPER MUST BE APPROVED LABELED DAMPER HAVING A 1 OR $1\frac{1}{2}$ HOUR RATING AS REQUIRED.
3. DAMPER MUST BE INDEPENDENTLY HUNG OR SUPPORTED. THIS CAN BE DONE BY HANGING THE DAMPER ITSELF OR THE DAMPER SLEEVE BY ADEQUATE RODS, WIRES OR SUPPORTS. SUCH HANGERS CAN BE ATTACHED TO THE BAR JOISTS.

METHOD OF SECURING DAMPER INTO WALLS. SLEEVE CLEARANCE WITHIN WALL OPENING.

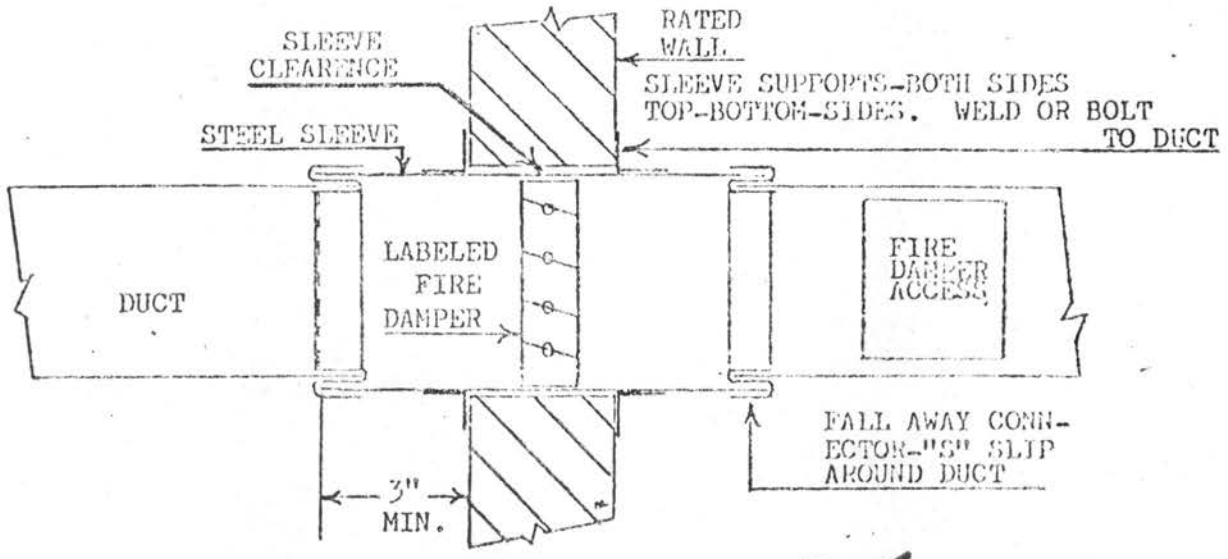

FIG 85-4

FIRE DAMPER SLEEVES SHALL BE CONNECTED TO DUCTWORK IN SUCH A MANNER THAT THE DUCT MAY SEPARATE FROM THE SLEEVE WITHOUT CAUSING ANY DISTORTION OF THE FIRE DAMPER AND ITS SLEEVE IN THE WALL OPENING. THIS CAN BEST BE ACHIEVED BY USE OF STANDARD CROSS JOINT CONNECTION SUCH AS THE PLAIN "S" SLIP; HEMMED "S" SLIP; BAR SLIP; STANDING "S" SLIP; ANGLE SLIP AND THE CUP SLIP JOINT.

CLEARANCE REQUIREMENTS FOR A SLEEVE WITHIN THE WALL OPENING IS BASED ON 1/8 IN. PER FOOT OF WIDTH (OR HEIGHT) UNLESS OTHERWISE COVERED IN THE LISTING OF THE ASSEMBLY. THE SLEEVE SHALL REST ON THE BOTTOM OF THE OPENING, AND NEED NOT BE CENTERED IN THE OPENING. (FRACTIONAL DIMENSIONS SHALL BE TAKEN AT THE NEXT LARGEST WHOLE FOOT.)

EXAMPLE: A 30IN. X 24IN. FIRE DAMPER SLEEVE IS INSTALLED IN A WALL OPENING. THE OPENING SHALL BE 30 3/8 IN. WIDE(1/8IN. X 3 FT.) BY 24 1/4 IN. HIGH(1/8 IN X 2 FT.).

THE SLEEVE IS RETAINED IN THE WALL OPENING BY THE USE OF STEEL RETAINING ANGLES. THESE RETAINING ANGLES MUST OVERLAP THE EDGE OF THE WALL OPENING FRAMING A MINIMUM OF ONE (1) INCH. THIS MEANS THAT THE MINIMUM WIDTH OF THE RETAINING ANGLE WOULD BE 1 3/8 IN. (GOOD PRACTICE CALLS FOR A SMALL SAFETY FACTOR BY MAKING THE ANGLE IN THIS CASE 1 1/2 IN. WIDE).

TYPICAL 2 HOUR FIRE RATED ROOF-CEILING ASSEMBLY

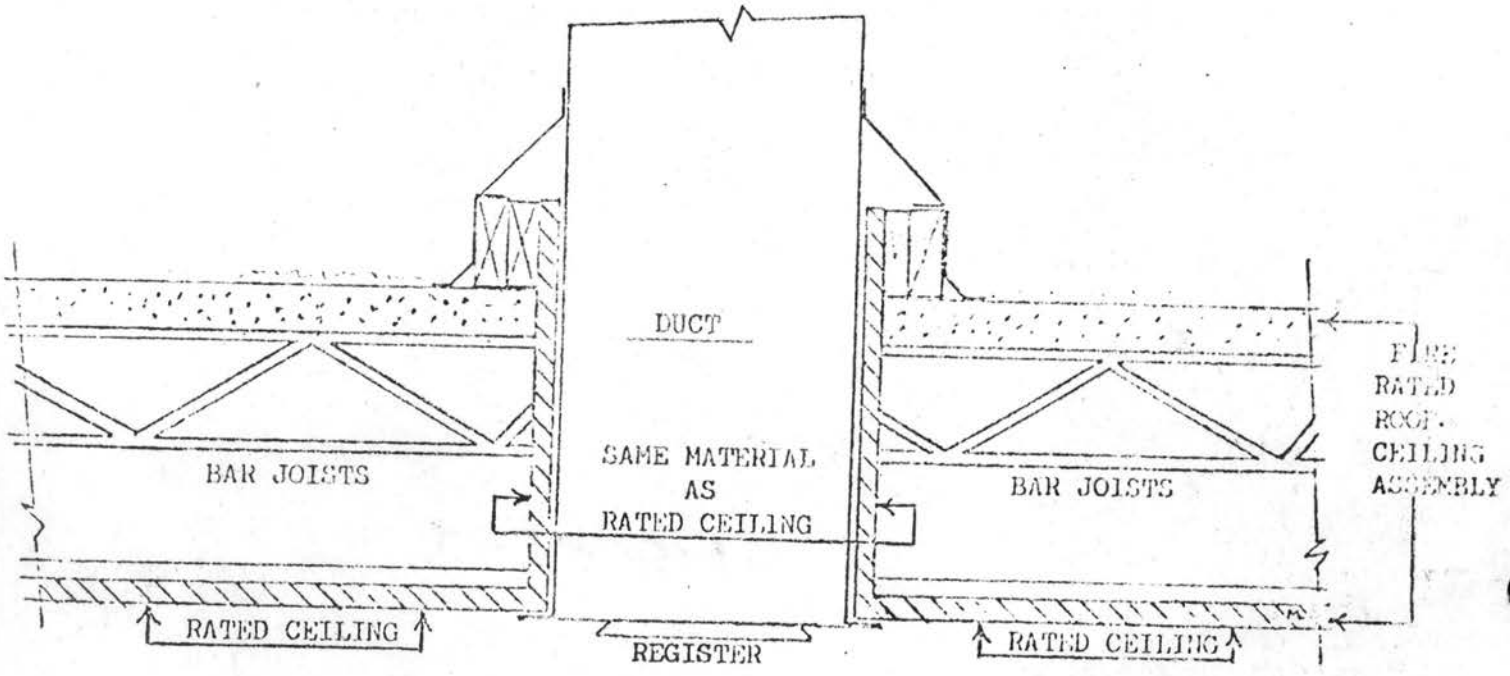

FIG 85-5

FIRE DAMPERS ARE NOT REQUIRED AT ROOF PENETRATION POINTS; HOWEVER, WHERE A ROOF-CEILING ASSEMBLY INVOLVES A RATED CEILING PENETRATION FOR A DUCT OR DIFFUSER, THE OPENING SHALL BE BOXED WITH A MATERIAL EQUAL TO THE FIRE RESISTIVE RATING OF THE CEILING OR MATERIAL SIMILAR TO THAT LISTED.

THE BOXED OPENING SHALL EXTEND THROUGH THE ROOF OPENING AND PROVIDE PROTECTION FOR ANY COMBUSTIBLE MATERIALS USED FOR CURBS.

STATE OF MINNESOTA

COUNTY OF RAMSEY

In the matter of the Proposed Amendments to the Plumbing Code, Electrical Code and Mechanical Code of the Minnesota State Building Code

AFFIDAVIT

Herbert W. Meyer, being duly sworn, on oath deposes and says:

1) That he is an employee of the Department of Administration of the State of Minnesota.

2) That on the 13th day of May, 1974, he requested from the Secretary of State's office for the State of Minnesota current list of all representatives of associations and other interested groups or persons who had registered their names with the Secretary of State for the purpose of obtaining notices of public hearings relating to the promulgation of regulations pursuant to M.S. 15.0412.

3) That on the 16th day of May, 1974, in response to the above request, the Secretary of State provided him with such a list, a copy of which is attached hereto and incorporated by reference.

Further affiant sayeth not.

Herbert W. Meyer

Herbert W. Meyer
State Building Inspector
Minnesota Department of Administration

Subscribed to and sworn to before me this 17th day of May, 1974.

JEAN MORLEY
Notary Public, Ramsey Co., Minn.
My Commission Expires
September 30, 1980

STATE OF MINNESOTA

COUNTY OF RAMSEY

In the matter of the Proposed Amendments to the Plumbing Code, Electrical Code and Mechanical Code of the Minnesota State Building Code

AFFIDAVIT OF MAILING

Herbert W. Meyer, being first duly sworn, deposes and says:

That on the 17th day of May, 1974, at the City of St. Paul, County of Ramsey, State of Minnesota, he served the attached Notice of Hearing by depositing in the United States mail at said City of St. Paul, a true and correct copy thereof, properly enveloped, with postage prepaid, to all local governmental units, all persons and associations at the addresses listed on the attached Certificate regarding the Secretary of State, members of the Minnesota Legislature, and other interested individuals.

Herbert W. Meyer

Herbert W. Meyer
State Building Inspector
Minnesota Department of Administration

Subscribed to and sworn to before me this 17th day of May, 1974.

JEAN [illegible]
Notary Public, Ramsey Co., Minn.
MY COMMISSION EXPIRES
September 30, 1980

STATE OF MINNESOTA

COUNTY OF RAMSEY

In the matter of the Proposed Amendments to the Plumbing Code, Electrical Code and Mechanical Code of the Minnesota State Building Code

CERTIFICATE

I hereby certify that the attached 356 Labels + 2 sheets constitute the complete list of persons, associations, and other interested groups who as of 2:30 o'clock P M., this 16th day of May, 1974, have requested pursuant to Minn. Stat. 1971, Section 15.0412, that their names be placed on file with the Secretary of State for the purpose of receiving notice of public hearing on proposed rules on the subject captioned above.

SECRETARY OF STATE

Arlen I. Erdahl

Arlen I. Erdahl

By: Clerk Desig

STATE OF MINNESOTA

COUNTY OF RAMSEY

BEFORE THE

COMMISSIONER OF ADMINISTRATION

In the Matter of the Proposed Amendments to the Plumbing Code, Electrical Code and Mechanical Code of the Minnesota State Building Code

FINDINGS OF FACT

The above entitled matter came on for hearing before the Commissioner of Administration of the State of Minnesota on the 24th day of June, 1974, at 8:01 a.m. in the State Office Building Auditorium, Room 83, St. Paul, Minnesota, after proper notice required by Minn. Stat. 1971, Section 15.0412, Subdivision 4, was served upon all persons, associations and other interested groups registered with the Secretary of State for that purpose.

After affording interested persons an opportunity to present written and oral data, statements and arguments, having heard all the testimony, having considered all of the evidence adduced and upon the records, files and proceedings herein, I find the following facts and conclusions regarding the adoption of the proposed amendments:

MHD 123(d)(8)(dd) Soil and Waste Piping (except special wastes) Underground or Embedded in Masonry Construction - "Plastic 6A and 6B and fittings which shall be laid on a continuous granular bed. Reference ASTM - D2321-72."

MHD 123(d)(10)(gg) Vent Piping Below Ground - "Plastic 6A and 6B and fittings" There was substantial testimony presented at the June 24, 1974 public hearing that the proposed 35 feet length limitation for plastic pipe underground was unnecessary: the rationale for such limitation was unfounded since piping underground is not subject to the wide variation in ambient temperature which may be encountered in plastic pipe installed in buildings above ground. The adoption of this amendment will provide for the use of acceptable alternative materials for plumbing systems.

Findings of Fact
June 24, 1974 Public Hearing

MHD 123(d)(9)(ff) Soil and Waste Piping (except special wastes) Above Ground - "Plastic 6A or 6B with corresponding fittings may be installed, except that no stack or horizontal drain may exceed 35 feet in total length."

MHD 123(d)(11)(hh) Vent Piping above Ground - "Plastic 6A and 6B with corresponding fittings may be installed except that no stack or horizontal vent may exceed 35 feet in total length."

Testimony at the June 24, 1974 public hearing, as well as the recognition of the use of plastic pipe found in model plumbing codes substantiate that length restrictions on proposed developed length are not justified. Plastic soil and waste piping above ground, which are subject to substantial change in ambient temperature, can be used where no stack or horizontal drain exceed 35 feet in length. Changes from vertical to horizontal runs compensate for expansion and contraction. Plastic soil and waste piping installed above ground should be permitted using plastic pipe with the limitation noted above. The adoption of this amendment will provide for the use of acceptable alternative materials for plumbing systems. Additionally, the amendments provide clarification of the definition of total length as 35 feet vertically and 35 feet horizontally for each run, not to exceed 35 feet in any given direction. This does not limit the overall run within a structure.

SBC 8601 - Electrical. Scope - All new electrical wiring, apparatus and equipment for electric light, heat and power shall comply with the regulations contained in the 1971 Edition of the National Electrical Code as approved by the American National Standards Institute (ANSI C1-1971) and Minn. Stat. 326.243 and the State Building Code as promulgated by the Commissioner of Administration effective January 15, 1974.

The Uniform Building Code does contain provisions relating to electrical installations. Such provisions relate to suitable electrical components installed in buildings where fire resistive construction is required. By adopting this amendment, electrical inspectors throughout the State will be more effectively aware of these building code provisions. All testimony given at the public hearing supported the adoption of this amendment.

No testimony was given in support of, or in opposition to, Chapter 51 - Uniform Building Code - Elevators, Dumbwaiters, Escalators and Moving Walks: Delete Sections 5101 - Scope, 5102 - Elevator Enclosures, 5103 Emergency Operation, 5104 - Emergency Communications.

Sections 5101, 5102, 5103, and 5104 are covered under Chapter 88 of the State Building Code. The adoption of this amendment will provide for clarification and avoid duplication of requirements for the elevator industry in the installation of elevators and will provide identical regulations with labor and industry and the Building Code Division in the State of Minnesota.

The following amendments are not adopted:

After affording interested persons an opportunity to present written and oral data, statements and arguments, having heard all the testimony, having considered all of the evidence adduced and upon the records, files and proceedings herein, I find the following facts and conclusions regarding the disapproval of the following proposed amendments:

MHD 123(d)(1)(aa) Allowance for Character of Soil and Water.

There was substantial testimony in opposition to the adoption of the proposed amendment on the basis that it would be in conflict with model plumbing codes and could cause certain communities throughout the state to lose urban federal assistance. The proposed amendment would permit the local administrative authority to select piping material used and method of thawing frozen water supplies within his municipality. The administrative authority within a municipality should not be able to disallow the use of an approved material simply because they profess to provide a water pipe thawing service. The decision as to the selection of piping material and method of thawing should rest with the consumer.

Table 131(a)(2)A adding "All building sewers shall not be less than 4 inches in diameter." There was substantial opposition to this proposed amendment at the public hearing. Model plumbing codes do not have a minimum size diameter drain pipe. Such codes base sizing on the number of fixtures served; i.e. performance standards are employed. The adoption of this amendment would provide for an unnecessary restriction and does not represent performance criteria in the selection of pipe size.

Findings of Fact
June 24, 1974 Public Hearing

SBC 7210 - New Section - Advisory Board

Although testimony was submitted in favor of the adoption of the proposed amendment, I conclude the proposed amendment should not be adopted because no statutory guidelines have been established in regard to the composition, authority, and responsibility of such a committee. In lieu of such an amendment, it is recommended that the State Building Inspector be directed to appoint, at his discretion, a mechanical code advisory committee to serve at his pleasure and make recommendations concerning the use and approval of new materials, equipment and methods.

SBC 7301 - through 8505 - Mechanical Amendments
There was substantial testimony in opposition of the proposed mechanical amendments because of legislative mandate to adopt regulations on energy conservation which will have a great impact on the proposed mechanical amendments and which may make them obsolete before they are actually effective. Further, that after the energy conservation code is adopted, a model mechanical and heating code, with suitable amendments to make it compatible with the energy conservation code, be heard at public hearing.

9-18-74
Date

Richard L. Brubacher
Commissioner of Administration

STATE OF MINNESOTA

COUNTY OF RAMSEY

BEFORE THE

COMMISSIONER OF ADMINISTRATION

In the matter of the proposed amendments to the Plumbing code, Electrical Code and Mechanical Code of the Minnesota State Building Code

ORDER ADOPTING RULES

The above-entitled matter came on for hearing before the Commissioner of Administration of the State of Minnesota on the 24th day of June, 1974, at 8:01 a.m. in the State Office Building Auditorium, Room 83, St. Paul, Minnesota, after proper notice required by Minn. Stat. 1971, Section 15.0412, Subdivision 4 was served upon all persons, associations and other interested groups registered with the Secretary of State for that purpose.
After affording interested persons an opportunity to present written and oral data, statements and arguments, having heard all of the testimony, having considered all of the evidence adduced and upon the records, files, and proceedings herein, and applicable statutory standards or criteria, and having confirmed the need for the above captioned rules:

NOW, THEREFORE, IT IS ORDERED that this rule identified as amendments to the State Building Code, Uniform Building Code and Minnesota Plumbing Code is adopted this day of 1974 pursuant to the authority vested in me by Minn. Stat. 1971, Section 16.86.

MHD 123(d)(8)(dd) Soil and Waste Piping (except special wastes) Underground or Embedded in Masonry Construction

MHD 123(d)(10)(gg) Vent Piping Below Ground

MHD 123(d)(9)(ff) Soil and Waste Piping (except special wastes) Above Ground

MHD 123(d)(11)(hh) Vent Piping above Ground

SBC 8601 Electrical

Delete Uniform Building Code Sections 5101 - Scope, 5102 - Elevator Enclosures, 5103 - Emergency Operation, 5104 - Emergency Communications

9-18-74.
Date

Richard L. Brubacher
Richard L. Brubacher
Commissioner of Administration