

Minnesota Attorney General: Administrative Rules Proceedings

Copyright Notice:

This material may be protected by copyright law (U.S. Code, Title 17). Researchers are liable for any infringement. For more information, visit www.mnhs.org/copyright.

Version 3
August 20, 2018

422.

John Mark Stumpf
Special Assistant
Attorney General

July 14, 1970

- WPC 40 Individual Sewage Treatment System Standards

422

Attorney General

John Mark Stensvaag
Special Assistant
Attorney General

June 29, 1978

Michael B. Miller
Special Assistant
Attorney General

296-4692

Rule WPC 40

The above-captioned rule is herewith returned without approval as to form and legality as the introductory paragraph to Appendix A makes it unclear whether the alternative standards in the appendix are mandatory. Specifically, the use of the word "guidelines" leaves this matter unclear.

When this language has been revised accordingly, please resubmit the rule to me and I will approve it.

MBM:mb

Enclosure

STATE OF MINNESOTA
OFFICE OF HEARING EXAMINERS
ROOM 300 – 1745 UNIVERSITY AVENUE
ST. PAUL, MINNESOTA 55104
(612) 296-6910

July 13, 1978

Mr. John-Mark Stensvaag
Special Assistant Attorney General
Minnesota Pollution Control Agency
1935 W. County Road B2
Roseville, Minnesota 55113

Re: Adoption of Minn. Reg. WPC 40

Dear Mr. Stensvaag:

In reply to your letter of July 11, 1978, relating to the changing of one word in the above-referenced rule, I appreciate your notifying us.

I have reviewed the changes requested and agree with you that changing the word "guidelines" to the term "standards" would not be a substantial change requiring withdrawal of the rule or rehearing.

Yours very truly,

DUANE R. HARVES
Chief Hearing Examiner

DRH:sh
cc: Lee Sheehy

RECEIVED
JUL 17 1978
ATTORNEY GENERAL
ADMINISTRATIVE AGENCIES

#422 PCA

RULES REVIEW CHECKLIST

DATE RULES RECEIVED 5/9 Temporary Rule —

Resubmitted and Received 7/12/78 – Due 7-22-78

DUE DATE 5/29

a. Returned to Agency w/o filing w/Secy of State _____
b. Approved _____ Date Sent Back to Agency _____

- -

1. Rules as Adopted _____
2. Rules as Proposed X
3. Certificate of Board's Authorizing Resolution, where applicable X
4. Order for Hearing X
5. Notice of Hearing X
   (i) Sufficiency X
6. Secretary of State's List X
7. Certificate of Acquisition of Secretary of State's List X
8. Affidavit of Mailing X
   (i) At least 30 days prior to hearing X
9. Statement of Need and Evidence X — NO
10. Hearing Examiner's Report X
11. Agency's Findings of Fact X
12. Certificate of Board's Resolution Adopting Rules, where applicable X
13. Order Adopting _____ → Need shorter one
14. Report of Chief Hearing Examiner _____
    (i) Finding of No Substantial Change _____
    (ii) Permission to Incorporate by Reference, where applicable _____
15. Certificate of Compliance with Rulemaking Procedures X
16. Copy of Notice of Intent to Solicit Outside Opinion, where applicable _____
17. Petition by Public, where applicable _____.

p. 42 Rules - "guidelines"
Att. of gds. - what if they change?
are figures mandatory

H/E
#20 p. 11 - "guideline"
#21 p. 12 - req - amdt of ord. by local gov't
last ¶ p. 14 - practical probs
p. 16 m - rehearing req.
#28 p. 18 - see rec. ch.

STATE OF MINNESOTA

OFFICE OF THE ATTORNEY GENERAL

Address Reply To:
OFFICE OF ATTORNEY GENERAL
MINNESOTA POLLUTION CONTROL AGENCY
1935 W. County Road B2
Roseville, Minnesota 55113
612/296-7342

July 11, 1978

RECEIVED
JUL 12 1978
ATTORNEY GENERAL
ADMINISTRATIVE AGENCIES

Lee Sheehy, Esq.
Department of Administration
G19-K Administration Building
50 Sherburne Avenue
St. Paul, Minnesota 55155

RE: Adoption of Minn. Reg. WPC 40 Setting Forth Individual Sewage Treatment Systems Standards

Dear Lee:

In accordance with our telephone conversation yesterday, I am enclosing for your review and approval one original and two copies of an Order Amending Order Adopting Rules and three final copies of Minn. Reg. WPC 40. As you will note, we have made the word change requested by Mr. Miller of your office.

It is our understanding that you will now approve the rule and file it with the Secretary of State. I am simultaneously sending to the Chief Hearing Examiner a letter enclosing the Order Amending Order Adopting Rules so that he may, if he so desires, comment on the issue of substantial change.

Thank you for your cooperation in this matter.

Very truly yours,

John-Mark

John-Mark Stensvaag
Special Assistant
Attorney General

Enclosure

JMS/jm

AN EQUAL OPPORTUNITY EMPLOYER

STATE OF MINNESOTA

COUNTY OF RAMSEY

MINNESOTA POLLUTION

CONTROL AGENCY

In the Matter of the Proposed Adoption of Minn. Reg. WPC 40 Setting Forth Individual Sewage Treatment System Standards

NO. PCA-78-004-WS

ORDER AMENDING ORDER ADOPTING RULES

The Order Adopting Rules in the above-entitled matter was approved by the Minnesota Pollution Control Agency Board and executed by the Chairman and Executive Director of the Agency on April 25, 1978. Pursuant to Minn. Stat. §15.0412 subd. 4 (Supp. 1977), the Office of the Attorney General has reviewed the rule and has advised the Agency that it must change one word in Appendix A of the rule in order to conform to requirements of form and legality. Specifically, the Attorney General's Office has concluded that the use of the word "guidelines" in the first sentence of paragraph A of Appendix A improperly implies that the provisions of Appendix A are not binding under any circumstances. Paragraph B(2) of Appendix A expressly provides that, where WPC 40 is administered by State agencies, Appendix A defines the minimum requirements for alternative systems; it has been made clear throughout the public hearing process that the provisions of Appendix A are, in fact, binding under such circumstances. Accordingly, the Attorney General's Office has declared that, to remove any ambiguity, the word "guidelines" in the first sentence of paragraph A of Appendix should be replaced with the word "standards". This change in wording will not, in any way, change the intent or the effect of the rule.

NOW, THEREFORE, IT IS ORDERED that, pursuant to authority vested in this Agency by Minn. Stat. §115.03 subd. 1(e)(1976), the Order Adopting Rules dated April 25, 1978, shall be amended to provide the following change in wording in paragraph A of Appendix A:

> A. General. The intent of this appendix is to provide ~~guidelines~~ standards for the design, location, installation, use and maintenance of alternative sewage treatment systems in areas of limiting soil characteristics or where a standard system cannot be installed or is not the most suitable treatment. Where such systems are employed, they shall comply with all local codes and ordinances, and be subject to timely inspections to assure adherence to specifications.

MINNESOTA POLLUTION CONTROL AGENCY

Joseph F. Grinnell
Chairman
by David F. Zentner
Vice-Chairman

Sandra S. Gardebring
Executive Director

Dated: July 11, 1978.

WPC 40: INDIVIDUAL SEWAGE TREATMENT SYSTEMS STANDARDS

TABLE OF CONTENTS

SECTION			PAGE
A.	Intent		1
B.	Definitions		1
C.	General		8
D.	Site Evaluation		13
E.	Building Sewers		17
F.	Sewage Tanks		
	1.	General	18
	2.	Septic Tanks	
		a. Design	19
		b. Capacity	23
		c. Location	24
		d. Maintenance	24
	3.	Aerobic Tanks	24
G.	Distribution of Effluent		26
H.	Final Treatment and Disposal		
	1.	General	31
	2.	Standard System	
		a. Sizing	31
		b. Location	34
		c. Design and Construction	35
		d. Dual Field System	38

Table of Contents (cont.)

SECTION		PAGE
I.	Alternative Systems	40
J.	Severability	41
K.	Variance	41
Appendix A:	Alternative Systems	42
Appendix B:	Figures	68
Appendix C:	Building Sewer	77
Appendix D:	Water Supply Setbacks	93
Appendix E:	Surface Water Setbacks	94

WPC-40: INDIVIDUAL SEWAGE TREATMENT SYSTEMS STANDARDS

A. INTENT

The improper design, location, installation, use and maintenance of individual sewage treatment systems adversely affects the public health, safety and general welfare by discharge of inadequately treated sewage to surface and ground waters. In accordance with the authority granted in Minnesota Statutes Chapters 104, 105, 115, and 116 (1976), the Minnesota Pollution Control Agency, hereinafter referred to as the Agency, does hereby provide the minimum standards and criteria for the design, location, installation, use and maintenance of individual sewage treatment systems, and thus protect the surface and ground waters of the state, and promote the public health and general welfare.

Further, it is intended that the administration and enforcement of these standards be conducted by local units of government, since experience has shown that sanitary ordinances can most effectively be administered at the local level.

B. DEFINITIONS

For the purposes of these standards, certain terms or words used herein shall be interpreted as follows: the word "shall" is mandatory, the words "should" and "may" are permissive. All distances, unless otherwise specified, shall be measured horizontally.

1. AEROBIC TANK Any sewage tank which utilizes the principle of oxidation in the decomposition of sewage by the introduction of air into the sewage.

2. AGENCY The Minnesota Pollution Control Agency.

3. ALTERNATIVE SYSTEM An individual sewage treatment system employing such methods and devices as presented in section (I).

4. BAFFLE A device installed in a septic tank for proper operation of the tank, and to provide maximum retention of solids. Includes vented sanitary tees and submerged pipes in addition to those devices that are normally called baffles.

5. BEDROCK That layer of parent material which is consolidated and unweathered.

6. BEDROOM Any room within a dwelling that might reasonably be used as a sleeping room.

7. BUILDING DRAIN That part of the lowest piping of the drainage system which receives the sewage discharge inside the walls of the building and conveys it to the building sewer beginning at least one foot outside the building footings.

8. BUILDING SEWER That part of the drainage system which extends from the end of the building drain and conveys its discharge to an individual sewage treatment system.

9. CAPACITY The liquid volume of a sewage tank using inside dimensions below the outlet.

10. CESSPOOL An underground pit into which raw household sewage or other untreated liquid waste is discharged and from which the liquid seeps into the surrounding soil. See section (C)(2)(d).

11. DISTRIBUTION PIPES Perforated pipes or agricultural drain tiles that are used to distribute sewage tank effluent in a soil treatment system.

12. DNR The Minnesota Department of Natural Resources.

13. DOSING CHAMBER (or pump pit or wet well) A tank or separate compartment following the sewage tank which serves as a reservoir for the dosing device.

14. DOSING DEVICE A pump, siphon, or other device that discharges sewage tank effluent from the dosing chamber to the soil treatment system.

15. DWELLING Any building or place used or intended to be used by human occupants as a single family or two family unit.

16. FILTER MATERIAL Clean rock, crushed igneous rock or similar insoluble, durable and decay-resistant material free from dust, sand, silt, or clay. The size shall range from three-fourths inch to two and one-half inches.

17. GREYWATER Liquid waste from a dwelling or other establishment produced by bathing, laundry, culinary operations and from floor drains, and specifically excluding toilet waste.

18. HOLDING TANK A watertight tank for storage of sewage until it can be transported to a point of approved treatment and disposal.

19. IMPERMEABLE With regard to bedrock, a bedrock having no cracks or crevices and having a vertical permeability less than one inch in 24 hours shall be considered impermeable. With regard to soils,

a soil horizon or layer having a vertical permeability less than one inch in 24 hours shall be considered impermeable.

20. INDIVIDUAL SEWAGE TREATMENT SYSTEM A sewage treatment system, or part thereof, serving a dwelling, or other establishment, or group thereof, which utilizes subsurface soil treatment and disposal.

21. LOCAL UNIT OF GOVERNMENT A township, city or county organized under the laws of the State of Minnesota.

22. MOTTLING A zone of chemical oxidation and reduction activity, appearing as splotchy patches of red, brown, orange and gray in the soil.

23. MOUND SYSTEM A system where the soil treatment area is built above the ground to overcome limits imposed by proximity to water table or bedrock, or by rapidly or slowly permeable soils.

24. OTHER ESTABLISHMENT Any public or private structure other than a dwelling which generates sewage.

25. PERCOLATION RATE The time rate of drop of a water surface in a test hole as specified in section (D)(3)(b) of this regulation.

26. PERMITTING AUTHORITY Any State agency or local unit of government which administers the provisions of these standards.

27. PLASTIC LIMIT A soil moisture content below which the soil may be manipulated for purposes of installing a soil treatment system, and above which manipulation will cause compaction and puddling.

28. SAND A soil texture composed by weight of at least 85 percent of soil particles ranging in size between 0.05 and 2.0 mm.

29. SEEPAGE PIT (or leaching pit or dry well) An underground pit into which a sewage tank discharges effluent or other liquid waste and from which the liquid seeps into the surrounding soil through the bottom and openings in the side of the pit.

30. SEPTAGE Those solids and liquids removed during periodic maintenance of a septic or aerobic tank, or those solids and liquids which are removed from a holding tank.

31. SETBACK A separation distance measured horizontally.

32. SEWAGE Any water carried domestic waste, exclusive of footing and roof drainage, from any industrial, agricultural, or commercial establishment, or any dwelling, or any other structure. Domestic waste includes but is not limited to liquid waste produced by bathing, laundry, culinary operations and liquid wastes from toilets and floor drains, and specifically excludes animal waste and commercial process water.

33. SEWAGE FLOW Flow as determined by measurement of actual water use or, if actual measurements are unavailable, as estimated by the best available data provided by the Agency.

34. SEWAGE TANK A watertight tank used in the treatment of sewage. Includes, but is not limited to septic tanks and aerobic tanks.

35. SEWAGE TANK EFFLUENT That liquid which flows from a septic or aerobic tank under normal operation.

36. SEPTIC TANK Any watertight, covered receptacle designed and constructed to receive the discharge of sewage from a building sewer, separate solids from liquid, digest organic matter, and

store liquids through a period of detention, and allow the clarified liquids to discharge to a soil treatment system.

37. SHORELAND Land located within the following distances from public waters: (1) 1,000 feet from the ordinary high water mark of a lake, pond or flowage; and (2) 300 feet from a river or stream or the landward extent of a flood plain designated by ordinance on such a river or stream, whichever is greater.

38. SITE The area bounded by the dimensions required for the proper location of the soil treatment system.

39. SLOPE The ratio of vertical rise or fall to horizontal distance.

40. SOIL CHARACTERISTICS, LIMITING Those soil characteristics which preclude the installation of a standard system, including but not limited to evidence of water table or bedrock closer than three feet to the ground surface, and percolation rates faster than one-tenth or slower than 60 minutes per inch.

41. SOIL TEXTURAL CLASSIFICATION Where soil particle sizes or textures are specified in this regulation, they refer to the soil textural classification in the Soil Survey Manual, Handbook No. 18, U. S. Department of Agriculture, 1951.

42. SOIL TREATMENT AREA That area of trench or bed bottom which is in direct contact with the filter material of the soil treatment system.

43. SOIL TREATMENT SYSTEM A system whereby sewage tank effluent is treated and disposed of below the ground surface by filtration and percolation through the soil. Includes those systems commonly known as seepage bed, trench, drainfield, disposal field, and

includes mounds, Electroosmosis systems, and seepage pits.

44. STANDARD SYSTEM An individual sewage treatment system employing a building sewer, sewage tank and the soil treatment system commonly known as seepage bed or trenches, drainfield, or leachfield.

45. SURFACE WATER FLOODING The 100 year flood plain along rivers and streams as defined by the DNR, or in the absence of such data, as defined by the largest flood of record. On lakes, high water levels as determined or recorded by the DNR or, in the case of no DNR record, by local records or experience. Other surface water flooding or high water areas should be determined by local information.

46. TEN YEAR FLOOD That flood which can be expected to occur, on an average, of once in ten years; or the level to which flood waters have a ten percent chance of rising in any given year.

47. TOILET WASTE Fecal matter, urine, toilet paper and any water used for flushing.

48. VALVE BOX Any device which can stop sewage tank effluent from flowing to a portion of the soil treatment area. Includes, but is not limited to caps or plugs on distribution or drop box outlets, divider boards, butterfly valves, gate valves, or other mechanisms.

49. WATER TABLE The highest elevation in the soil where all voids are filled with water, as evidenced by presence of water or soil mottling or other information.

50. ORDINARY HIGH WATER MARK A mark delineating the highest water

level which has been maintained for a sufficient period of time to leave evidence upon the landscape. The ordinary high water mark is commonly that point where the natural vegetation changes from predominantly aquatic to predominantly terrestrial.

51. WATERTIGHT Constructed so that no water can get in or out below the level of the outlet.

52. WILD AND SCENIC RIVER LAND USE DISTRICT Those lands designated by the Commissioner of the DNR as the protected land corridor along those rivers or river segments designated as wild, scenic or recreational rivers.

C. GENERAL PROVISIONS

1. Applicability

a. Administration by State Agencies

(1) Individual sewage treatment systems which serve a single facility generating greater than 15,000 gallons per day shall conform to the requirements of these standards and shall make application for and obtain a State Disposal System Permit from the Agency.

(2) Collector systems which serve 15 dwellings or 5,000 gallons per day, whichever is less, shall conform to the requirements of these standards and shall make application for and obtain a State Disposal System Permit from the Agency.

(3) Individual sewage treatment systems serving establishments or facilities licensed or otherwise regulated by the State of

Minnesota shall conform to the requirements of these standards.

(4) Any individual sewage treatment system requiring approval by the State of Minnesota shall also comply with all local codes and ordinances.

b. Administration by Local Units of Government

(1) Shoreland and Floodplain Areas, and Wild and Scenic River Land Use Districts

Pursuant to Minnesota Statutes, Section 104.04, 104.36 and 105.485 (1976), certain counties and municipalities must enact ordinances which comply with the appropriate regulations of the Minnesota Department of Natural Resources, some of which in turn require compliance with the regulations of the Minnesota Pollution Control Agency.

(2) Other Areas

Outside of the above mentioned areas, these standards provide recommended guidelines for the adoption of local ordinances and for the design, location, construction, use and maintenance of individual sewage treatment systems.

(3) Localized Standards

Nothing in these standards shall prevent local units of government from enacting ordinances which provide more adequate sewage treatment under local conditions.

2. General

a. Surface Discharge

Unless specifically permitted by the Agency*, sewage, sewage tank effluent, or seepage from a soil treatment system shall not be discharged to the ground surface, abandoned wells, or bodies of surface water, or into any rock or soil formation the structure of which is not conducive to purification of water by filtration, or into any well or other excavation in the ground.

b. Treatment Required

The system, or systems, shall be designed to receive all sewage from the dwelling, building, or other establishment served. Footing or roof drainage shall not enter any part of the system.

c. System Components

The system shall consist of a building sewer, sewage tank and soil treatment system. All sewage shall be treated in a sewage tank or toilet waste treatment device, and the sewage tank effluent shall be discharged to the soil treatment system.

d. Prohibited Installations

Cesspools shall not be installed.

---

* All new or existing systems which discharge to surface waters or the ground surface must obtain either a National Pollutant Discharge Elimination System (NPDES) or State Disposal System Permit from the Agency and shall comply with all requirements pertaining thereto.

e. System Sizing

Where the construction of additional bedrooms, the installation of mechanical equipment or other factors likely to affect the operation of the system can be reasonably anticipated, the installation of a system for such anticipated need shall be required.

3. Advisory Committee

a. There is hereby created an Advisory Committee on Individual Sewage Treatment Systems (ISTS) hereinafter referred to as the Committee.

b. The Committee shall, subject to the approval of the Agency:

(1) Review and advise the Agency on revisions of standards and legislation relating to ISTS.

(2) Review technical data relating to ISTS.

(3) Develop and revise a technical manual on ISTS.

(4) Develop educational materials and programs for ISTS.

(5) Advise the Agency and local unit of government on the administration of standards and ordinances pertaining to ISTS.

c. The Committee shall consist of 16 voting members. Of the 16 voting members:

One shall be a citizen of Minnesota, representative of the public;

One shall be from the Agricultural Extension Service of the

U.S.D.A. and the University of Minnesota;

Six shall be county administrators (such as zoning administrators, sanitarians, etc.), one from each of the five Agency regions and one from the seven-county metropolitan area.

One shall be a municipal building inspector;

Six shall be sewage treatment contractors, one from each of the five Agency regions and one from the seven-county metropolitan area; and

One shall be a water well contractor.

d. The following agencies and associations shall each have one non-voting ex officio member to assist the Advisory Committee and to be advised, in turn, on matters relating to ISTS: the Agency, the DNR, Department of Health, the U.S.D.A. Soil Conservation Service, the Metropolitan Council, the Association of Minnesota Counties, the Minnesota Association of Township Officials, the League of Minnesota Cities, and the Minnesota Society of Professional Engineers.

e. All members shall be appointed by the Agency Board from recommendations by the affected groups. All members shall serve for two years, with terms staggered so as to maintain continuity.

f. In the case of a vacancy, an appointment shall be made for the unexpired balance of the term. The administrators, inspectors, and contractors shall have been bona fide residents of this state for a period of at least three years prior to appointment, and

shall have had at least three years experience in their respective businesses.

g. Robert's Rules of Order shall prevail at all meetings of the Advisory Committee.

D. SITE EVALUATION

1. All proposed sites for individual sewage treatment systems shall be evaluated as to:

a. Depth to the highest known or calculated ground water table or bedrock;

b. Soil conditions, properties and permeability;

c. Slope;

d. The existence of lowlands, local surface depressions, and rock outcrops;

e. All legal setback requirements from: existing and proposed buildings; property lines; sewage tanks; soil treatment systems; water supply wells; buried water pipes and utility lines; the ordinary high water mark of lakes, rivers, streams, flowages; and the location of all soil treatment systems and water supply wells on adjoining lots within 150 feet of the proposed soil treatment system, sewage tank and water supply well;

f. Surface water flooding probability.

2. A preliminary evaluation shall be made of publicly available,

existing data. If this evaluation, in the opinion of the permitting authority, yields enough information that the site is suitable, approval may be given for the installation of a standard system as specified in section (H)(2). If a preliminary evaluation does not produce sufficient information, a field evaluation shall be made to determine the necessary information as specified in section (D)(1).

3. Procedures for Soil Borings and Percolation Tests

a. Soil Borings

Where soil borings are required, they shall be made as follows:

(1) Each boring or excavation shall be made to a depth at least three feet deeper than the bottom of the proposed system or until bedrock or a water table is encountered, whichever is less.

(2) A soil texture description shall be recorded by depth and notations made where texture changes occur.

(3) Particular effort shall be made to determine the highest known water table by recording the first occurence of mottling observed in the hole, or if mottling is not encountered, the open holes in clay or loam soils shall be observed after standing undisturbed a minimum of 16 hours, and depth to standing water, if present, shall be measured.

b. Percolation Tests

Where percolation tests are required, they shall be made as follows:

(1) Test hole dimensions and locations:

(a) Each test hole shall be six to eight inches in diameter, have vertical sides, and be bored or dug to the depth of the bottom of the proposed individual sewage treatment system.

(b) Soil texture descriptions shall be recorded noting depths where texture changes occur.

(2) Preparation of the test hole:

(a) The bottom and sides of the hole shall be carefully scratched to remove any smearing and to provide a natural soil surface into which water may penetrate.

(b) All loose material shall be removed from the bottom of the test hole and two inches of one-fourth to three-fourths inch gravel shall be added to protect the bottom from scouring.

(3) Soil saturation and swelling:

(a) The hole shall be carefully filled with clear water to a minimum depth of 12 inches over the soil at the bottom of the test hole and maintained for no less than four hours.

(b) The soil shall then be allowed to swell for at least 16, but no more than 30 hours. In sandy soils, the saturation and swelling procedure shall not be required and the test may proceed if one filling of the hole has seeped away in less than ten minutes.

(4) Percolation rate measurement:

(a) In sandy soils adjust the water depth to eight inches over the soil at the bottom of the test hole. From a fixed reference point, the drop in water level shall be measured in inches to the nearest one-eighth inch at approximately ten minute intervals. A measurement can also be made by determining the time it takes for the water level to drop one inch from an eight-inch reference point. If eight inches of water seeps away in less than ten minutes, a shorter interval between measurements shall be used, but in no case shall the water depth exceed eight inches. The test shall continue until three consecutive percolation rate measurements vary by a range of no more than ten percent.

(b) In other soils, adjust the water depth to eight inches over the soil at the bottom of the test hole. From a fixed reference point, the drop in water level shall be measured in inches to the nearest one-eighth inch at approximately 30 minute intervals, refilling between measurements to maintain an eight-inch starting head. The test shall continue until three consecutive percolation rate measurements vary by a range of no more than ten percent. The percolation rate can also be made by observing the time it takes the water level to drop one inch from an eight-inch reference point if a constant water depth of at least eight inches has been maintained for at least four hours prior to the measurement.

(5) Calculating the percolation rate:

(a) Divide the time interval by the drop in water level to obtain the percolation rate in minutes per inch.

(b) Percolation rates determined for each test hole shall be averaged to determine the final soil treatment system design.

(6) For reporting the percolation rate, worksheets showing all calculations and measurements shall be submitted.

(7) A percolation test shall not be run where frost exists below the depth of the proposed soil treatment system.

E. BUILDING SEWERS

The design, construction, and location of, and the materials for use in building sewers are presently governed by the Minnesota Building Code which, in Minn. Reg. SBC 8701, incorporates by reference the Minnesota Plumbing Code, Minn. Reg. MHD 120-135, and by specific provisions of the Minnesota Water Well Construction Code, Minn. Reg. MHD 217(c)(1)(dd), (ee) and (ff). Relevant portions of the Minnesota Plumbing Code, as of the date of enactment of this rule, are reproduced in Appendix C. Minn. Reg. MHD 217(c)(1)(dd), (ee) and (ff), as of the date of enactment of this rule, is reproduced in Appendix D.

F. SEWAGE TANKS

1. General

a. All tanks, regardless of material or method of construction shall be:

(1) Watertight.

(2) So designed and constructed as to withstand all lateral earth pressures under saturated soil conditions with the tank empty.

(3) So designed and constructed as to withstand a minimum of seven feet of saturated earth cover above the tank top.

(4) Not subject to excessive corrosion or decay.

b. Any tank not having an integrally cast bottom shall not

be installed when the water table is closer than three inches to the bottom of the excavation at the time of construction.

2. Septic Tanks

a. Design

All tanks, regardless of material or method of construction, shall conform to the following criteria:

(1) The liquid depth of any septic tank or compartment thereof shall be not less than 30 inches. A liquid depth greater than six and one-half feet shall not be considered in determining tank capacity.

(2) No tank or compartment thereof shall have an inside horizontal dimension less than 24 inches.

(3) Inlet and outlet connections of the tank shall be submerged by means of baffles.

(4) The space in the tank between the liquid surface and the top of the inlet and outlet baffles shall be not less than 20 percent of the total required liquid capacity, except that in horizontal cylindrical tanks this space shall be not less than 15 percent of the total required liquid capacity.

(5) Inlet and outlet baffles shall be constructed of acid resistant concrete, acid resistant fiberglass or plastic.

(6) Sanitary tees shall be affixed to the inlet or outlet pipes with a permanent waterproof adhesive. Baffles shall

be integrally cast with the tank, affixed with a permanent waterproof adhesive or affixed with stainless steel connectors, top and bottom.

(7) The inlet baffle shall extend at least six inches but not more than 20 percent of the total liquid depth below the liquid surface and at least one inch above the crown of the inlet sewer.

(8) The outlet baffle and the baffles between compartments shall extend below the liquid surface a distance equal to 40 percent of the liquid depth except that the penetration of the indicated baffles or sanitary tees for horizontal cylindrical tanks shall be 35 percent of the total liquid depth. They also shall extend above the liquid surface as required in section (F)(2)(a)(4). In no case shall they extend less than six inches above the liquid surface.

(9) There shall be at least one inch between the underside of the top of the tank and the highest point of the inlet and outlet devices.

(10) The inlet invert shall be not less than three inches above the outlet invert.

(11) The inlet and outlet shall be located opposite each other along the axis of maximum dimension. The horizontal distance between the nearest points of the inlet and outlet devices shall be at least four feet.

(12) Sanitary tees shall be at least four inches in diameter. Inlet baffles shall be no less than six inches or no more than 12

inches measured from the end of the inlet pipe to the nearest point on the baffle. Outlet baffles shall be six inches measured from beginning of the outlet pipe to the nearest point on the baffle.

(13) Access to the septic tank shall be as follows:

(a) There shall be one or more manholes, at least 20 inches least dimension, and located within six feet of all walls of the tank. The manhole shall extend through the cover to a point within 12 inches but no closer than six inches below finished grade. The manhole cover shall be covered with at least six inches of earth.

(b) There shall be an inspection pipe of at least four inches diameter or a manhole over both the inlet and outlet devices. The inspection pipe shall extend through the cover and be capped flush or above finished grade. A downward projection of the center line of the inspection pipe shall be directly in line with the center line of the inlet or outlet device.

(14) Compartmentation of single tanks.

(a) Septic tanks larger than 3,000 gallons and fabricated as a single unit shall be divided into two or more compartments.

(b) When a septic tank is divided into two compartments, not less than one-half nor more than two-thirds of the total volume shall be in the first compartment.

(c) When a septic tank is divided into three or more compartments, one-half of the total volume shall be in the first compartment and the other half equally divided in the other

compartments.

(d) Connections between compartments shall be baffled so as to obtain effective retention of scum and sludge. The submergence of the inlet and outlet baffles of each compartment shall be as specified in sections (F)(2)(a)(7) and (8).

(e) Adequate venting shall be provided between compartments by baffles or by an opening of at least 50 square inches near the top of the compartment wall.

(f) Adequate access to each compartment shall be provided by one or more manholes, at least 20 inches least dimension, and located within six feet of all walls of the tank. The manhole shall extend through the cover to a point within 12 inches but no closer than six inches below finished grade. The manhole cover shall be covered with at least six inches of earth.

(15) Multiple tanks

(a) Where more than one tank is used to obtain the required liquid volume, the tanks shall be connected in series.

(b) Each tank shall comply with all other provisions of section (F)(1).

(c) No more than four tanks in series can be used to obtain the required liquid volume.

(d) The first tank shall be no smaller than any subsequent tanks in series.

b. Capacity

(1) Dwellings

The liquid capacity of a septic tank serving a dwelling shall be based on the number of bedrooms comtemplated in the dwelling served and shall be at least as large as the capacities given below (see sections (B)(6) and (C)(2)(e)):

NUMBER OF BEDROOMS	TANK LIQUID CAPACITIES (gallons)
2 or less	750
3 or 4	1,000
5 or 6	1,500
7, 8 or 9	2,000

For ten or more bedrooms, the septic tank shall be sized as an other establishment. See section (F)(2)(b)(2).

(2) Other Establishments

The liquid capacity of a septic tank serving an establishment other than a dwelling shall be sufficient to provide a sewage detention period of not less than 36 hours in the tank for sewage flows less than 1,500 gallons per day, but in no instance shall the liquid capacity be less than 750 gallons. For sewage flows greater than 1,500 gallons per day the minimum liquid capacity shall equal 1,125 gallons plus 75 percent of the daily sewage flow.

c. Location

(1) The sewage tank shall be placed so that it is accessible for the removal of liquids and accumulated solids.

(2) The sewage tank shall be placed on firm and settled soil capable of bearing the weight of the tank and its contents.

(3) Sewage tanks shall be set back as specified in Table IV following section (H)(2)(d)(3).

(4) Sewage tanks shall not be placed in areas subject to flooding or in flood plains delineated by local ordinances adopted in compliance with the State-wide Standards for Management of Flood Areas of Minnesota (Minn. Reg. NR 85-93), or in areas for which regional flood information is available from the DNR, except that in areas where ten year flood information is available from and/or approved by the DNR, sewage tanks may be installed in accordance with all provisions of Appendix A, section (C)(6) of these standards.

d. Maintenance

The owner of any septic tank or his agent shall regularly inspect and arrange for the removal and sanitary disposal of septage from the tank whenever the top of the sludge layer is less than 12 inches below the bottom of the outlet baffle or whenever the bottom of the scum layer is less than three inches above the bottom of the outlet baffle.

3. Aerobic Tanks

Aerobic tank treatment systems shall comply with the general requirements for sewage tanks set forth in section (F)(1), and with the following:

a. The treatment system including each individual unit or compartment shall be easily accessible for inspection and maintenance and shall be provided with secured covers.

b. The raw sewage flow from the dwelling shall be intercepted by a trash trap prior to its entering the aeration compartment. The trash trap shall have a net holding capacity of not less than 20 percent of the average daily flow. The invert level to the trap shall be above the liquid level and discharge directly into the trap. The outlet from the trap to the aeration compartment shall be deep baffled or equipped with a tee or long ell.

c. The trash trap shall be readily accessible for inspection and effective cleaning and shall be so constructed as to prevent unauthorized entry.

d. The aeration compartment shall have a minimum holding capacity of 500 gallons or 120 gallons per bedroom, whichever is greater.

e. The method of aeration shall be accomplished by mechanical aeration, diffused air, or both. The method used shall maintain aerobic conditions at all times.

f. The settling compartment shall have a minimum net holding capacity equal to 20 percent of the volume of the aeration compartment. The design shall provide for effective settling and continuous return of settled sludge to the aeration compartment.

g. A minimum one year warranty and an initial two year service contract which specifies regular inspection calls and effluent

quality checks shall be provided as a part of the purchase agreement.

h. All other features of the aerobic tanks not specifically mentioned above shall comply with National Sanitation Foundation Standard No. 40 (November 1970).

G. DISTRIBUTION AND DOSING OF EFFLUENT

1. Distribution

a. Gravity Distribution

(1) Level Ground

Where the elevation difference of the ground surface does not exceed 28 inches in any direction within the soil treatment system, the sewage tank effluent may be directed to the soil treatment system through a system of interconnected distribution pipes or trenches in a continuous system.

(2) Slightly Sloping Ground

(a) Sewage tank effluent may be distributed by a distribution box provided the final ground surface elevation of the lowest trench is at least one foot higher than the outlet inverts of the distribution box.

(b) Distribution box

(i) The box shall be watertight with a removable cover and shall be constructed of durable materials not subject to excessive corrosion or decay.

(ii) The inverts of all outlets shall be at the same elevation as measured from a liquid surface in the bottom of the box.

(iii) The inlet invert shall be at least one inch above the outlet inverts.

(iv) The outlet inverts shall be at least four inches above the distribution box floor.

(v) Each drainfield trench line shall be connected separately to the distribution box and shall not be subdivided.

(vi) When sewage tank effluent is delivered to the distribution box by pump, either a baffle wall shall be installed in the distribution box or the pump discharge shall be directed against a wall or side of the box on which there is no outlet. The baffle shall be secured to the box and shall extend at least one inch above the crown of the inlet flow line.

(3) Sloping Ground

(a) Where the elevation difference of the ground surface exceeds 28 inches in any direction within the soil treatment system and a distribution box cannot be used as specified in section (G)(1)(a)(2), a drop box shall be installed at the head end of each lateral line. Connections between drop boxes shall be by watertight pipes.

(b) Drop Boxes

(i) The drop box shall be watertight and con-

structed of durable materials not subject to excessive corrosion or decay.

(ii) The invert of the inlet pipe shall be at least one inch higher than the invert of the outlet pipe to the next trench.

(iii) The invert of the outlet pipe to the next trench shall be at least two inches higher than the invert of the outlet pipe of the trench in which the box is located.

(iv) When sewage tank effluent is delivered to the drop box by a pump, the pump discharge shall be directed against a wall or side of the box on which there is no outlet.

(v) The drop box shall have a removable cover either flush or above finished grade or covered by no more than six inches of soil.

b. Pressure Distribution

(1) Pressure distribution laterals shall be sized as shown in Table I.

(2) Laterals shall be spaced no further than 20 inches from a trench or bed wall.

(3) Laterals shall be spaced no further than 40 inches apart.

(4) Laterals shall be connected to a header pipe which is at least one and one-half inch and no more than two inches in diameter.

TABLE I

MAXIMUM ALLOWABLE LATERAL LENGTHS IN FEET FROM HEADER PIPE

PERF. DIA.	PERFORATION SPACING					
	2.5 FEET			3.0 FEET		
	PIPE DIA.			PIPE DIA.		
	1"	1 1/4"	1 1/2"	1"	1 1/4"	1 1/2"
3/16"	34	52	70	36	60	75
7/32"	30	45	57	33	51	63
1/4"	25	38	50	27	42	54

2. Dosing

a. **Dosing Chamber.** A dosing device is not necessary in all situations but, where used, shall comply with the following requirements.

(1) The dosing chamber shall be watertight and constructed of sound and durable materials not subject to excessive corrosion or decay.

(2) There shall be one or more manholes, at least 20 inches least dimension and preferably located directly above the dosing device. The manhole shall extend through the dosing chamber cover to final grade and shall be so constructed as to prevent unauthorized entry.

(3) The size of the effluent dose shall be determined by design of the soil treatment unit but in no case shall the dosing chamber be sized to provide a dose of less than 75 gallons.

b. Dosing Devices for Gravity Distribution

(1) Where a dosing device is employed, a pump or siphon shall deliver the dose to the soil treatment unit for gravity distribution over the soil treatment area.

(2) For dwellings, the dosing device shall discharge at least 600 gallons per hour but no more than 2,700 gallons per hour.

(3) For other establishments, the dosing device should discharge at a rate at least ten percent greater than the water supply flow rate but no faster than the rate at which effluent will flow out of the distribution device.

(4) If the dosing device is a siphon, a maintenance inspection shall be made every six months by the owner or his agent. The siphon shall be maintained in proper operating condition.

(5) If the dosing device is a pump, it shall be cast iron or bronze fitted and with stainless steel screws or constructed of other sound, durable and corrosion-resistant materials.

(6) Where the soil treatment area is at a higher elevation than the pump, sufficient dynamic head shall be provided for both the elevation difference and friction loss.

(7) Where the dosing device is a pump, an alarm device shall be installed to warn of pump failure.

c. Dosing Devices for Pressure Distribution

(1) The dosing device shall be a pump which is cast iron or bronze fitted and with stainless steel screws or constructed of sound, durable and corrosion-resistant materials.

(2) The pump discharge capacity shall be at least seven and one-half gallons per minute for each 100 square feet of soil treatment area.

(3) The pump discharge head shall be at least five feet greater than the head required to overcome pipe friction losses and the elevation difference between the pump and the distribution device.

(4) The quantity of effluent delivered for each pump cycle shall be no greater than 25 percent of one day's sewage flow.

(5) An alarm device shall be installed to warn of pump failure.

H. FINAL TREATMENT AND DISPOSAL

1. General

Final treatment and disposal of all sewage tank effluent shall be by means of soil treatment and disposal.

2. Standard System

a. Sizing

(1) The required soil treatment area shall be determined by the daily sewage flow and the percolation rate of the soil.

(2) Acceptable methods for estimating sewage flow for dwellings are given in Table II. The minimum daily sewage flow estimated for any dwelling shall provide for at least two bedrooms. For multiple residential units, the estimated daily sewage flow shall consist of the sum of the flows of each individual unit.

TABLE II

SEWAGE FLOW (GALLONS PER DAY)

NUMBER OF BEDROOMS	Classification of Dwelling* I	II	III	IV
2	300	225	180	--
3	450	300	218	--
4	600	375	256	--
5	750	450	294	--
6	900	525	332	--

*** Table II is based on the following formulas:**

Classification I : Sewage Flow = 150(# of Bedrooms)

Classification II : Sewage Flow = 75(# of Bedrooms + 1)

Classification III: Sewage Flow = 66 + 38(# of Bedrooms + 1)

Classification IV : If a greywater system is employed pursuant to Appendix A, Section (D)(2), estimated sewage flow shall equal 60% of the amount provided in column I, II, or III of Table II.

(3) For other establishments, the daily sewage flow shall be determined as provided in Section (B)(33).

(4) The soil treatment area shall be at least as large as set forth in Table III.

TABLE III

PERCOLATION RATE (Minutes per inch)	REQUIRED SOIL TREATMENT AREA IN SQUARE FEET (Per Gallon of Sewage Flow per Day)
Faster than 0.1**	--
0.1 to 5***	0.83
6 to 15	1.27
16 to 30	1.67
31 to 45	2.00
46 to 60	2.20
Slower than 60****	--

** Soil is unsuitable for standard system if percolation rate is less than 0.1 minutes per inch. See Appendix A, section (C)(5).

*** Consider alternative sewage treatment systems for soils with this percolation rate range. See Appendix A, section (C)(5).

**** Soil is unsuitable for standard system if percolation rate is slower than 60 minutes per inch. See Appendix A, section (C)(4).

(5) Table III gives the required bottom area assuming six inches of filter material below the distribution pipe for trenches and beds. The required bottom area may be reduced, for trenches only, by the following percentages: 20 percent for 12 inches of filter material below the distribution pipe; 34 percent for 18 inches; and 40 percent for 24 inches. The filter material shall completely encase the distribution pipe to a depth of at least two inches.

b. Location

(1) On slopes in excess of 12 percent, the soil profile shall be carefully evaluated in the location of the proposed soil treatment system and downslope to identify the presence of layers with different permeabilities that may cause sidehill seepage. In no case shall a trench be located within 15 feet of where such a layer surfaces on the downslope.

(2) Bed construction shall be limited to areas having natural slopes of less than six percent.

(3) Soil treatment systems shall be located as specified in Table IV following section (H)(2)(d)(3).

(4) Soil treatment areas shall not be placed in areas subject to flooding or in flood plains delineated by local ordinances adopted in compliance with the State-wide Standards and Criteria for Management of Flood Plain Areas of Minnesota (Minn. Reg. NR 85-93), or in areas for which regional flood information is available from the DNR, except that in areas where ten year flood

information is available from and/or approved by the DNR, soil treatment systems may be installed in accordance with the provisions of Appendix A, section (C)(6).

c. Design and Construction

(1) The bottom of trenches and beds shall be at least three feet above the water table or bedrock.

(2) The trenches shall be not less than 18 inches nor more than 36 inches wide. Any trench wider than 36 inches shall be considered a bed.

(3) Trenches and beds shall be not more than 100 feet in length.

(4) The bottom of the trench or bed excavation shall be level.

(5) The bottom and sides of the soil treatment system to the top of the filter material shall be excavated in such a manner as to leave the soil in a natural, unsmeared, and uncompacted condition. Excavation shall be made only when the soil moisture content is at or less than the plastic limit.

(6) When the percolation rate is slower than 15 minutes per inch, excavation shall be by back hoe or other means that allow the equipment wheels or tracks to remain on the surface soil. Excavation equipment or other vehicles shall not be driven on the soil treatment area.

(7) There shall be a layer of at least six but no more than 24 inches of filter material in the bottom of the trenches and beds.

(8) Where disposal trenches are constructed within ten feet of trees six inches or larger in diameter, or dense shrubbery, or where it can reasonably be anticipated that such vegetation will be present during the expected life of the system, at least 12 inches of filter material shall be placed beneath the distribution pipe.

(9) Distribution Pipes - Gravity Distribution

(a) Distribution pipe used in trenches or beds for gravity flow distribution shall be at least four inches in diameter and constructed of sound and durable material not subject to corrosion or decay or to loss of strength under continuously wet conditions.

(b) Perforated pipe used for sewage distribution pipes shall have one or more rows of holes of no less than one-half inch in diameter spaced no more than 36 inches apart. Holes shall be spaced to prevent failure due to loads. Distribution pipes shall have a load bearing capacity of not less than 1,000 pounds per lineal foot.

(c) Agricultural drain tile shall be in 12-inch lengths and laid with one-fourth inch open joints on grade boards. All open joints shall be protected on top by strips of asphalt-treated building paper at least ten inches long and three to six inches wide or by other acceptable means.

(d) Other devices may be used to distribute sewage tank effluent over the soil treatment area upon approval of the permitting authority.

(10) Pressure Distribution

(a) Distribution pipes used in trenches or beds for pressure distribution shall be at least one inch in diameter and constructed of sound and durable material not subject to corrosion or decay or to loss of strength under continuously wet conditions.

(b) Perforations shall be sized and spaced as shown in Table I set forth following section (G)(1)(b)(4).

(11) The distribution pipes shall be laid level or on a uniform slope away from the distribution device of no more than four inches per 100 feet.

(12) Gravity distribution pipes in beds shall be uniformly spaced no more than five feet apart and not more than 30 inches from the side walls of the bed.

(13) The filter material shall completely encase the disposal pipes to a depth of at least two inches.

(14) The filter material shall be covered with untreated building paper or a two-inch layer of hay or straw or similar, approved permeable materials.

(15) The trenches or beds shall be backfilled and crowned above finished grade to allow for settling. The top six inches of soil shall have the same texture and density as the adjacent soil.

(16) The minimum depth of cover over the distribution pipes shall be at least eight inches. The maximum depth of cover over the distribution pipes shall be no more than 36 inches and preferably no more than 24 inches.

(17) A grass cover shall be established by the owner or his agent over the soil treatment system.

d. Dual Field

(1) Dual field systems shall be used only where the percolation rate is slower than five minutes per inch.

(2) Dual field systems shall be sized, designed, and constructed as set forth above for standard systems except as follows:

(a) The soil treatment area shall be divided into two or more parts.

(b) Alternating soil treatment areas shall each be connected to a valve box outlet.

(3) A part of the soil treatment area shall be used no more than one year unless inspection of the effluent level indicates that a longer duration can be used.

TABLE IV

MINIMUM SETBACK DISTANCES (feet)

Feature	Sewage Tank	Soil Treatment Area
Water Supply well less than 50 feet deep and not encountering at least ten feet of impervious material	*	*
Any other water supply well or buried water suction pipe	*	*
Buried pipe distributing water under pressure	*	*
Buildings	10	20
Property Lines	10	10
The Ordinary High Water Mark of:		
Natural Environment Lakes and Rivers	**	**
Recreational Development Lakes and Streams	**	**
General Development Lakes and Streams	**	**
Wild Rivers	**	**
Scenic Rivers	**	**
Recreational Rivers and Designated Tributaries of Wild, Scenic, and Recreational Rivers	**	**

* Setbacks from water supply wells and buried water pipes are presently governed by Minn. Reg. MHD 217(c)(1)(dd), (ee) and (ff). These regulations, as of the date of enactmant of this rule, are reproduced in Appendix D.

** Setbacks from lakes, rivers and streams are presently governed by Minn. Reg. Cons. 72(b)(4), NR 79(d)(2) and NR 83(d)(2)(dd). These regulations, as of the date of enactment of this rule, are reproduced in Appendix E.

I. ALTERNATIVE SYSTEMS

Where limiting soil characteristics exist, special systems of sewage treatment and disposal, including but not limited to those in Appendix A, may be employed provided:

1. reasonable assurance of performance of such system is presented to the permitting authority;

2. the engineering design of such system is first approved by the permitting authority;

3. there is no discharge to the ground surface or to surface waters;

4. treatment and disposal of wastes is in such a manner so as to protect the public health and general welfare; and

5. such systems comply with all applicable requirements of these standards and with all local codes and ordinances.

J. SEVERABILITY

If any provision of these standards or the application thereof to any person or circumstances is held to be invalid, such invalidity shall not affect other provisions of these standards or application of any other part of these standards which can be given effect without application of the invalid provision. To this end the provisions of all sections, subsections or subdivisions herein and the various applications thereof are declared to be severable.

K. VARIANCE

In any cases where a permit is required by the Agency, and upon application of the responsible person or persons, the Agency finds that by reason of exceptional circumstances the strict enforcement of any provision of these standards would cause undue hardship, that disposal of the sewage, industrial waste or other waste is necessary for the public health, safety or welfare, or that strict conformity with the standards would be unreasonable, impractical or not feasible under the circumstances, the Agency in its discretion may permit a variance therefrom upon such conditions as it may prescribe for prevention, control or abatement of pollution in harmony with the general purpose of these standards and the intent of applicable state and federal laws.

APPENDIX A

ALTERNATIVE SYSTEMS

A. General

The intent of this appendix is to provide standards for the design, location, installation, use and maintenance of alternative sewage treatment systems in areas of limiting soil characteristics, or where a standard system cannot be installed or is not the most suitable treatment. Where such systems are employed, they shall comply with all local codes and ordinances, and be subject to timely inspections to assure adherance to specifications.

B. Adoption and Use

1. Where WPC 40 is administered by a local unit of government, those local units of government may adopt this appendix, in whole or in part, as part of a local code or ordinance. Nothing in WPC 40 or this appendix, however, shall require the adoption of any part of this appendix as a local ordinance or code. Further, nothing in WPC 40 or this appendix shall require local units of government to allow the installation of any system in this appendix.

2. This Appendix defines the minimum requirements for alternative systems serving establishments or facilities licensed or otherwise regulated by the State of Minnesota or this Agency pursuant to section (C)(1)(a).

C. Class I Alternatives - Modified Standard Systems

1. Extreme caution and careful planning shall be employed wherever limiting characteristics including, but not limited to water table or bedrock, exist within two feet of the original ground surface.

2. Fluctuating Ground Water

a. Where natural drainage will not provide three feet of separation between the bottom of the soil treatment area and the highest known or calculated level of the water table, agricultural drain tile may be used to intercept or lower the seasonal high water table, except within shorelands of public waters. There shall be at least ten feet of undisturbed soil between the sidewall of the soil treatment unit and the agricultural drain tile.

b. Within shorelands of public waters, agricultural drain tile may be used to intercept the seasonal high water table provided the ground water table has a slope of at least two feet per hundred feet toward the public water and provided the drain tile are installed upslope of the soil treatment system. There shall be at least 20 feet of undisturbed soil between the sidewall of the soil treatment unit and the agricultural drain tile.

c. In all cases the greatest practicable vertical separation distance from the water table shall be provided.

3. Bedrock Proximity

In no case shall filter material of the soil treatment system be placed closer than three feet to creviced bedrock or to consolidated permeable bedrock. When all horizons of the original soil profile have percolation rates slower than 60 minutes per inch, filter material of the soil treatment system shall be placed no closer than seven feet to consolidated impermeable bedrock. A maximum depth of 24 inches of sand may be used under the filter material. Where additional fill is required to achieve the required separation distance, a soil having a percolation rate between five and 45 minutes per inch (loamy sand to silt loam) 12 months after placement shall be used. If it is not possible to allow the soil to settle for 12 months after placement, mechanical methods may be used to settle the fill to within ten percent of its in situ density.

4. Slowly Permeable Soils

a. In no case shall excavation for the purpose of construct-

ing a soil treatment system be made in any soil layer having a percolation rate slower than 120 minutes per inch.

b. In no case shall excavation for the purpose of constructing a soil treatment system be made in a soil layer having a percolation rate slower than 60 minutes per inch unless the moisture content is lower then the plastic limit of the soil.

c. In no case shall filter material be placed in contact with original soil having a percolation rate slower than 60 minutes per inch.

d. Where the percolation rate of the original soil is slower than 60 minutes per inch, at least six inches but no more than 12 inches of fill material having a percolation rate of between five and 30 minutes per inch (loamy sands and loams) after placement shall be placed between the filter material and the original soil along the excavation bottom and sidewalls.

e. In no case shall construction equipment, wheels or tracks be placed in contact with the bottom of the excavation during the construction of a soil treatment system in soils having a percolation rate slower than 15 minutes per inch.

f. The size of soil treatment system shall be based on the required treatment area for a soil having a percolation rate of 60 minutes per inch as specified in Table III set forth in section (H)(2)(a)(4).

5. Rapidly Permeable Soils

a. Filter material for a soil treatment unit

shall not be placed in contact with original soil having a percolation rate faster than one-tenth minute per inch.

b. For coarse soils having a percolation rate faster than one-tenth minute per inch, at least six inches of sandy loam textured soil having a percolation rate between five and 15 minutes per inch after placement (loamy sand to sandy loam) shall be placed between the filter material and the coarse soil along the excavation bottom and sidewalls.

c. For soils with percolation rates between one-tenth and five minutes per inch at least one of the following treatment techniques shall be used:

(1) Provide at least six inches of sandy loam textured soil with a percolation rate between five and 15 minutes per inch after placement between the filter material and the coarse soil.

(2) Distribution of sewage tank effluent by pressure flow over the treatment area as specified in section (G)(1)(b).

(3) Divide the total soil treatment area into at least four equal parts connected serially.

6. Flood Plain Areas

a. The soil treatment area shall be a trench system with at least 12 inches of filter material below the distribution pipe. There shall be no pipe or other installed opening between the filter material and the soil surface.

b. The trench system shall be located on the highest feasible area of the lot and shall have location preference over all other improvements except the water supply well. The bottom of the trench shall be at least as high as the elevation of the ten year flood. The sewage tank may be located so as to provide gravity flow to the soil treatment area.

c. If a pumping station is used to move effluent from the sewage tank to the drainfield, provisions shall be made to prevent the pump from operating when inundated with flood waters.

d. When fill is needed to raise the elevation of the soil treatment area, a mound system may be used with the following additional requirement: The elevation of the mound shall be such that the elevation of the bottom of the rock layer shall be at least one-half foot above the ten year flood elevation. Inspection wells shall not be installed unless the top of the mound is above the elevation of the regional flood.

e. When the top of the sewage tank is inundated, the dwelling must cease discharging sewage into it. This may be accomplished by either temporarily evacuating the structure until the system again becomes functional, or by diverting the sewage into a holding tank sized and installed according to the requirements below.

f. The building sewer shall be designed to prevent backflow of liquid into the building when the system is inundated. If a holding tank is utilized, the building sewer shall be designed to permit rapid diversion of sewage into the holding tank when the

system is inundated.

g. If a holding tank is utilized for a dwelling, its liquid capacity shall be equal to 100 gallons times the number of bedrooms times the number of days between the ten year stage on the rising limb of the regional flood hydrograph and the ten year stage on the falling limb of the hydrograph, or 1,000 gallons, whichever is greater. For other establishments see Appendix A, section (F).

h. Whenever the water level has reached a stage above the top of the sewage tank, the tank shall be pumped to remove all solids and liquids after the flood has receded before use of the system is resumed.

D. Class II Alternatives - Reduced Area Systems

1. Aerobic Tanks

No additional reduction in soil treatment area shall be allowed with the use of an aerobic treatment tank.

2. Separate Toilet Waste and Greywater Systems

a. General

(1) A toilet waste treatment device shall be used in conjunction with a greywater system.

(2) In all cases, only toilet wastes shall be discharged to toilet waste treatment devices. Greywater or garbage shall not be discharged to the device except as specifically recommended by a manufacturer.

b. Toilet Waste Treatment Devices

(1) Toilet waste treatment devices shall be considered as one of two types: I - privies; and II - other devices, including, but not limited to, incinerating, composting, biological, chemical, recirculating or holding toilets.

(2) Type I - Privies

(a) Pit privies shall not be installed where the bottom of the pit is less than three feet above the water table. A vault privy shall be used in areas of high ground water. The vault of a vault privy shall be constructed in the same manner as a septic tank. See section (F)(1).

(b) Privies shall be set back from surface waters the same distance as required for buildings and from property lines and water supply wells the same distance as required for soil treatment areas.

(c) Pits or vaults shall be of sufficient capacity for the residence they serve, but shall have at least 50 cubic feet of capacity.

(d) The sides of the pit shall be curbed to prevent cave-in.

(e) The superstructure shall be constructed so as to be easily cleaned, and it shall be insect proof. The door and seat shall be self closing. All openings including vent openings, shall be screened.

(f) Privies shall be adequately vented.

(g) When the pit is filled to within one foot of the top the solids shall be removed or a new pit shall be constructed. The abandoned pit shall be filled with clean earth and slightly mounded to allow for settling. Removed solids shall be disposed of by land application in accordance with Agency guidelines for septage disposal and all local ordinances and codes.

(h) All liquids and solids removed from a vault privy shall be treated and disposed of by application in accordance with the Agency's septage disposal guidelines.

(3) Type II - Other Devices

(a) Other devices may be used where reasonable assurance of performance is provided.

(b) All Type II devices shall be vented.

(c) All electric, gas and water connections to a Type II device shall conform to all local ordinances and codes.

(d) Operation and maintenance of all Type II devices shall follow the manufacturer's recommendations.

(4) All materials removed from a Type I or II toilet waste treatment device, including but not limited to, ashes, compost and all solids and liquids shall be disposed of in a public sewage system or by land application in accordance with the Agency's septage disposal guidelines and all local ordinances and codes.

c. Greywater System

(1) Plumbing

(a) The drainage system in new systems shall be based on a pipe diameter of two inches to prevent installation of a water flush toilet. There shall be no openings or connections to the drainage system, including floor drains, larger than two inches in diameter. For repair or replacement of an existing system, the existing drainage system may be used.

(b) Toilets or urinals of any kind shall not be connected to the drainage system. Toilet waste or garbage shall not be discharged to the drainage system.

(c) Garbage grinders shall not be connected to the drainage system.

(2) Building sewer

The building sewer shall meet all requirements of section (E) except that the building sewer for a greywater system shall be at least two inches in diameter.

(3) Sewage Tank

(a) Greywater septic tanks shall meet all requirements of section (F)(1), except that the liquid capacity of a greywater septic tank serving a dwelling shall be based on the number of bedrooms contemplated in the dwelling served and shall be at least as large as the capacities given below (see sections (B)(6) and (C)(2)(e)):

TABLE A-1

Number of Bedrooms	Tank Liquid Capacity (gallons)
2 or less or hand pump	300
3 or 4	500
5 or 6	750
7, 8 or 9	1,000

(b) For ten or more bedrooms or other establishments, the greywater septic tank shall be sized as for an other establishment (see section (F)(2)(b)(2)) except that the minimum liquid capacity shall be at least 300 gallons.

(c) Greywater aerobic tanks shall meet all requirements of section (F)(3).

(4) Distribution and Dosing

Distribution and dosing of greywater shall meet all requirements of section (G).

(5) Final Treatment and Disposal

(a) Standard System

A standard greywater system shall meet all requirements of sections (H)(1) and (2).

(b) Alternative System

A greywater mound system shall meet all requirements of Appendix A, section (E)(1).

3. Seasonal Use

a. Where a commercial establishment is occupied or used for less than 180 days per year and less than 120 days consecutively, the maximum daily sewage flow shall be determined and the average daily sewage flow shall be computed by dividing the total annual estimated or measured sewage flow by 365 days. The size of the soil treatment system shall be based on the average daily sewage flow and the areas specified in Table III set forth in section (H)(2)(a)(4). All other requirements of soil treatment system construction shall be followed.

b. The maximum daily sewage flow shall be used to determine sewage tank size for other establishments. There shall be no reduction in the size of sewage tanks for seasonal use.

c. In no case shall a seasonal use establishment be converted to full-time use until the soil treatment system meets the size requirements of Table III set forth in section (H)(2)(a)(4).

E. Class III Alternatives - Advanced Alternative System

1. Mounds

a. Mounds may be constructed on soils having the site or soil conditions specified in Appendix A, section (C).

b. The soil percolation rate in all layers of the natural or fill soil to a depth of at least 24 inches below the sand, as

specified in Appendix A, section (E)(1)(1), shall be faster than 120 minutes per inch.

c. Below the sand layer there shall be at least one layer of soil, either natural or fill, at least 12 inches thick, which has a percolation rate slower than five minutes per inch (loamy sand).

d. Wherever possible, mounds shall be located on flat areas or crests of slopes. Mounds shall not be located on natural slopes of more than three percent if the percolation rate is slower than 60 minutes per inch to a depth of at least 24 inches below the sand layer.

e. Mounds shall not be located on slopes exceeding six percent if the soil percolation rate is slower than 30 minutes per inch to a depth of at least 24 inches below the sand layer.

f. Mounds shall not be located on natural slopes exceeding 12 percent under any soil percolation rate conditions.

g. The bottom area of the filter material shall be sized on the basis of 0.83 square feet per gallon of waste per day.

h. In no case shall the width of the filter material in a single bed exceed ten feet.

i. A rubber tired tractor may be used for plowing or discing but in no case shall a rubber tired tractor be used after the surface preparation is completed where the soil is slower than 15 minutes per inch. A crawler or track type tractor shall be used

for mound construction where the soil is slower than 15 minutes per inch.

j. The discharge pipe from the pump to the mound area shall be installed prior to soil surface preparation. The trench shall be carefully backfilled and compacted to prevent seepage of effluent.

k. Soil surface preparation

(1) The total area selected for the mound, including the dikes shall be plowed to a depth of at least eight inches or the sod layer broken and roughened by backhoe teeth. Furrows shall be thrown uphill and there shall be no deadfurrow under the mound. The soil shall be plowed only when the moisture content of a fragment eight inches below the surface is below the plastic limit.

(2) In soils having percolation rates faster than 15 minutes per inch (sandy loam) in the top eight-inch depth, disking may be used for surface preparation as a substitute for plowing.

(3) Mound construction shall proceed immediately after surface preparation is completed.

l. A minimum of twelve inches of soil defined as sand shall be placed where the filter material is to be located. A crawler tractor with a blade shall be used to move the sand into place. At least six inches of sand shall be kept beneath equipment to minimize compaction of the plowed layer. The sand layer upon which the filter material is placed shall be level.

m. A depth of at least nine inches of filter material shall be placed over the bed area below the distribution pipe.

n. Distribution of effluent over the filter material shall be either by four-inch distribution pipes with gravity flow from a distribution box or by perforated pipe under pressure from a manifold.

o. Gravity Distribution

(1) The four-inch distribution pipes shall be rigid plastic with holes at least one-half inch diameter spaced no further than 36 inches. One row of holes shall be laid at the bottom of the pipe.

(2) The distribution pipe shall slope downward two inches per 100 feet away from the distribution box.

(3) The far ends of the distribution pipe shall be connected.

(4) The distribution pipes shall be spaced no further than five feet apart and no further than 30 inches from the edge of the filter material.

(5) The distribution pipes shall connect to the outlets of a distribution box.

(6) The quantity of effluent per pump dose shall be at least 25 percent of the estimated or measured daily sewage flow.

p. Pressure distribution

(1) Perforation holes shall be as set forth in Table I set forth in section (G)(1)(b)(4). Holes shall be drilled straight into the pipe and not at an angle.

(2) The perforated pipe laterals shall be connected to a two-inch diameter manifold pipe with the ends capped. The laterals shall be spaced no further than 40 inches on center and no further than 20 inches from the edge of the filter material.

(3) The perforated pipe laterals shall be installed level with the perforations downward.

(4) The manifold pipe shall be connected to the supply pipe from the pump. The manifold shall be sloped toward the supply pipe from the pump.

q. At least two inches of filter material shall be placed over the lateral or distribution pipes.

r. Straw or marsh hay to an uncompacted depth of three to four inches shall be placed over the filter material.

s. Construction vehicles shall not be allowed on the filter material until backfill is placed.

t. Sandy loam soil shall be placed on the filter material to a depth of one foot in the center of the mound and to a depth of six inches at the sides.

u. A maximum of two ten-foot wide beds may be installed

side by side in a single mound if the soil percolation rate is between five and 60 minutes per inch to a depth of at least 24 inches below the sand layer. The beds shall be separated by four feet of sand.

v. When two beds are installed side by side the sandy loam fill at the center of the mound shall be 18 inches deep and six inches deep at the sides.

w. Six inches of topsoil shall be placed on the fill material over the entire area of the mound.

x. A grass cover shall be established over the entire area of the mound.

y. No shrubs shall be planted on the top of the mound. Shrubs may be placed at the foot and side slopes of the mound.

z. The side slopes on the mound shall be no steeper than three to one.

aa. Whenever mounds are located on slopes, a diversion shall be constructed immediately upslope from the mound to intercept and direct runoff.

bb. A pump shall be used as specified in section (G)(2)(c).

2. Collector Systems

a. General

(1) Where site or soil conditions do not allow for final treatment and disposal on an individual lot, a system whereby

a soil treatment system is located on another lot or lots may be employed, where approved by the local unit of government.

(2) Plans and specifications shall comply with local ordinances on such issues as zoning, joint ownership of land, joint maintenance responsibilities, easements, and other considerations and shall be approved by the local unit of government.

b. Design

(1) Common Soil Treatment System

The size of common soil treatment systems shall be based on the sum of the areas required for each residence.

(2) Sewage Tanks

The system shall be designed with each residence having a sewage tank or with a common sewage tank. In the case of a common tank, the capacity of the tank shall be sized according to section (F)(2)(b)(2) except that the minimum capacity shall be at least 3,000 gallons, and shall be compartmented if in a single tank.

(3) Sewers

(a) Sewer systems shall be designed on an estimated average daily flow for dwellings based on Table II, set forth in section (H)(2)(a)(2), plus estimated flows from other establishments.

(b) The sewer for systems with common sewage tanks shall be so constructed to give mean velocities, when

flowing full, of not less than two feet per second. The sewer for systems with individual sewage tanks shall be so constructed and designed to hydraulically conduct the flow for which they were designed. In no case shall a gravity sewer be less than four inches in diameter.

(c) Infiltration or exfiltration shall not exceed 200 gallons per inch of pipe diameter per mile per day.

(d) Cleanouts, brought flush with or above finished grade, shall be provided wherever a common sewer joins an individual building sewer or piping from an individual sewage tank, or every 100 feet, whichever is less, unless manhole access is provided.

(e) There shall be no physical connection between sewers and water supply systems. Sewers shall be set back from water supply systems and piping as required for building sewers. See section (E)(3).Where it is not possible to obtain proper separation distances, the sewer connections shall be water-tight and pressure tested as in section (E)(3).

(4) Pumps and Pump Stations

(a) Pump stations shall be watertight.

(b) Pump stations shall have manholes flush with or above finished grade for cleaning and maintenance.

(c) Manhole covers shall be so constructed as to prevent unauthorized entry.

(d) Pumps and pump stations shall be sized to handle peak flows.

(e) An alarm system shall be provided for all pumping stations to warn of pump failure, overflow or other malfunction.

c. Maintenance

All persons using a common drainfield system shall assure, by contract with maintenance personnel or other equivalent means, that the system will be adequately maintained throughout its useful life. The system so maintained includes, but is not limited to, common drainfields, common sewage tanks, common pumps, common pump stations, common sewers and all individual tanks connected to the common system.

3. Sewage Osmosis

a. The Electroosmosis System (a proprietary installation process under U. S. and Canadian patents) may be permitted as an alternative system in clay soils having percolation rates slower than 60 minutes per inch.

b. Standards and Criteria for approval:

(1) Installation shall comply with all applicable requirements for standard systems contained in these regulations as pertain to system location, water table and bedrock separation distances, septic tanks, pumping stations, distribution or drop boxes, and materials.

(2) Conditions for installation and reporting of performance shall be subject to the provisions in Appendix A, section (E)(5).

4. Seepage Pits

a. Seepage pits may be used for disposal of sewage tank effluent only when it can be clearly demonstrated that a standard drainfield system or mound system is not feasible on the particular site in question and when such use is indicated by favorable conditions of soil, ground water level or topography and where such use does not reduce the safety of surrounding ground water supplies. In areas where limestone or any geological formation characterized by similar fault patterns is covered by less than 50 feet of earth, seepage pits shall not be installed. The pit excavation shall terminate at least three feet above the highest known or calculated ground water table. The depth of the excavation shall not exceed 50 percent of the depth of any well casing in the area or ten feet, whichever is least.

b. When two or more seepage pits are used, a distribution box constructed in accordance with section(G)(1)(a)(2)(b)shall be used if the inlet inverts of the seepage pits have no more than one foot difference in elevation. If the difference in elevation between the inlet inverts is greater than one foot, the seepage pits shall be connected in series.

c. Seepage pits, in addition to the general provisions specified in Table IV following section (H)(2)(d)(3) shall be set back not less than the stated minimum distances from the following:

(1) Wells less than 50 feet in depth and not encountering at least 10 feet of impervious material . . . . . 150 ft.

(2) Any water supply well or buried water suction pipe . . . . . 75 ft.

(3) Buildings . . . . . 20 ft.

(4) Property lines and buried pipe distributing water under pressure . . 10 ft.

(5) Other seepage pits . . three times the diameter of the largest pit (edge to edge)

d. Effective soil treatment area of a seepage pit shall be calculated as the sidewall area below the inlet, exclusive of any hardpan, rock or clay formations. The sidewall area shall be based on the outer diameter of the pit lining plus 12 inches of rock in the annular space.

(1) Required treatment area shall be determined by the percolation test described in section (D) and from Tables II and III, set forth in sections (H)(2)(a)(2) and (4), with no reduction for increased filter material below or around the pit. In no case shall a seepage pit be installed in soils where the percolation rate of any stratum is faster than one-tenth minute per inch (coarse sand). A percolation test shall be made in each vertical stratum penetrated by the seepage pit, and the weighted average of the results, exclusive of results from soil strata in which the percolation rate is slower than 30 minutes per inch, shall be computed and applied to the seepage bed column of Table III as indicated.

(2) A minimum of four feet composite depth of porous formation for each installation shall be provided in one or more pits.

(3) All pits shall have an inside diameter of at least five feet.

e. Construction of all seepage pits shall conform to the following requirements:

(1) To prevent cave-in, the pit shall be precast concrete or lined with brick, stone or block at least four inches thick, laid in a radial arch to support the pit walls.

(2) The brick, stone or block shall be laid watertight above the inlet and with open joints below the inlet to provide adequate passage of liquids.

(3) A minimum annular space of 12 inches between the pit lining and excavation wall shall be filled with crushed rock or gravel.

(4) The seepage pit shall be so constructed at the top as to be capable of supporting the overburden of earth and any reasonable load to which it is subjected. Access to the pit shall be provided by means of a manhole or inspection hole equipped with a watertight cover. The seepage pit may terminate in a conventional manhole top, frame and cover to a point within 12 inches, but no closer than six inches below finished grade. The manhole cover shall be covered with at least six inches of earth. The top of the seepage pit shall be not less than 12 inches below the ground

surface. The top shall be provided with an inspection pipe of not less than four-inch diameter extending through the cover to a point flush with finished ground level. The top of the inspection pipe shall be provided with a readily removable watertight cap.

5. Other Systems

Where unusual conditions exist, special systems of treatment and disposal other than those specifically mentioned in Appendix A, sections (E)(1) to (E)(4) above, may be employed provided:

a. reasonable assurance of performance of such system is presented to the permitting authority;

b. the engineering design of such system is first approved by the permitting authority;

c. there is no discharge to the ground surface or to surface waters;

d. treatment and disposal of wastes is in such a manner so as to protect the public health and general welfare;

e. such systems comply with all applicable requirements of these standards and with all local codes and ordinances.

F. Class IV Alternatives - Holding Tanks

1. General

Holding tanks may be allowed only as replacements for existing non-conforming systems or on existing parcels or lots as of the

date of the enactment of these standards and only where it can conclusively be shown that a standard, Class I, Class II or mound system cannot be feasibly installed.

2. Construction

A holding tank shall be constructed of the same materials and by the same procedures as those specified for watertight septic tanks.

3. Access

A cleanout pipe of at least six inches diameter shall extend to the ground surface and be provided with seals to prevent odor and to exclude insects and vermin. A manhole of at least 20 inches least dimension shall extend through the cover to a point within 12 inches, but no closer than six inches below finished grade. The manhole cover shall be covered with at least six inches of earth.

4. Depth of Bury

The tank shall be protected against flotation under high water table conditions. This shall be achieved by weight of tank, earth anchors or shallow bury depths.

5. Capacity

a. For a dwelling the size shall be 1,000 gallons, or 400 gallons times the number of bedrooms, whichever is greater.

b. For permanent structures other than dwellings, the

capacity shall be based on measured flow rates or estimated flow rates. The tank capacity shall be at least five times the daily flow rate.

6. Location

Holding tanks shall be located:

a. In an area readily accessible to the pump truck under all weather conditions.

b. As specified for septic tanks in Table IV, set forth following section (H)(2)(d)(3).

c. Where accidental spillage during pumping will not create a nuisance.

7. Contract

A contract for disposal and treatment of the sewage wastes shall be maintained by the owner with a pumper, municipality, agency or firm established for that purpose.

8. Accidental Overflow

Holding tanks shall be monitored to minimize the chance of accidental sewage overflows. Techniques such as visual observation, warning lights or bells, or regularly scheduled pumping shall be used. For other establishments, a positive warning system shall be installed which allows 25 percent reserve capacity after actuation.

Figure 1

VERTICAL SIDEWALL SEPTIC TANK

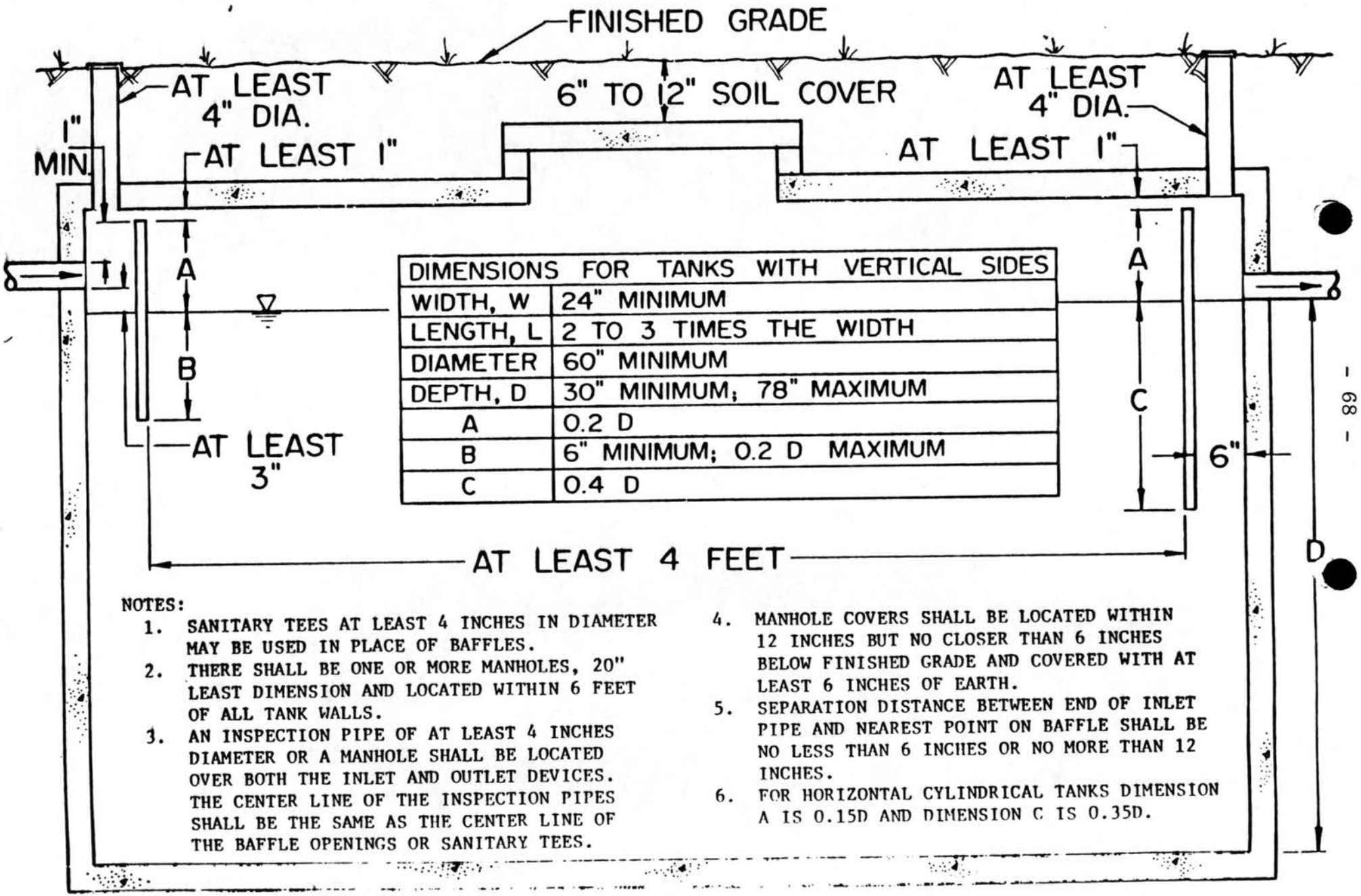

DIMENSIONS FOR TANKS WITH VERTICAL SIDES	
WIDTH, W	24" MINIMUM
LENGTH, L	2 TO 3 TIMES THE WIDTH
DIAMETER	60" MINIMUM
DEPTH, D	30" MINIMUM; 78" MAXIMUM
A	0.2 D
B	6" MINIMUM; 0.2 D MAXIMUM
C	0.4 D

NOTES:

1. SANITARY TEES AT LEAST 4 INCHES IN DIAMETER MAY BE USED IN PLACE OF BAFFLES.
2. THERE SHALL BE ONE OR MORE MANHOLES, 20" LEAST DIMENSION AND LOCATED WITHIN 6 FEET OF ALL TANK WALLS.
3. AN INSPECTION PIPE OF AT LEAST 4 INCHES DIAMETER OR A MANHOLE SHALL BE LOCATED OVER BOTH THE INLET AND OUTLET DEVICES. THE CENTER LINE OF THE INSPECTION PIPES SHALL BE THE SAME AS THE CENTER LINE OF THE BAFFLE OPENINGS OR SANITARY TEES.
4. MANHOLE COVERS SHALL BE LOCATED WITHIN 12 INCHES BUT NO CLOSER THAN 6 INCHES BELOW FINISHED GRADE AND COVERED WITH AT LEAST 6 INCHES OF EARTH.
5. SEPARATION DISTANCE BETWEEN END OF INLET PIPE AND NEAREST POINT ON BAFFLE SHALL BE NO LESS THAN 6 INCHES OR NO MORE THAN 12 INCHES.
6. FOR HORIZONTAL CYLINDRICAL TANKS DIMENSION A IS 0.15D AND DIMENSION C IS 0.35D.

Figure 2

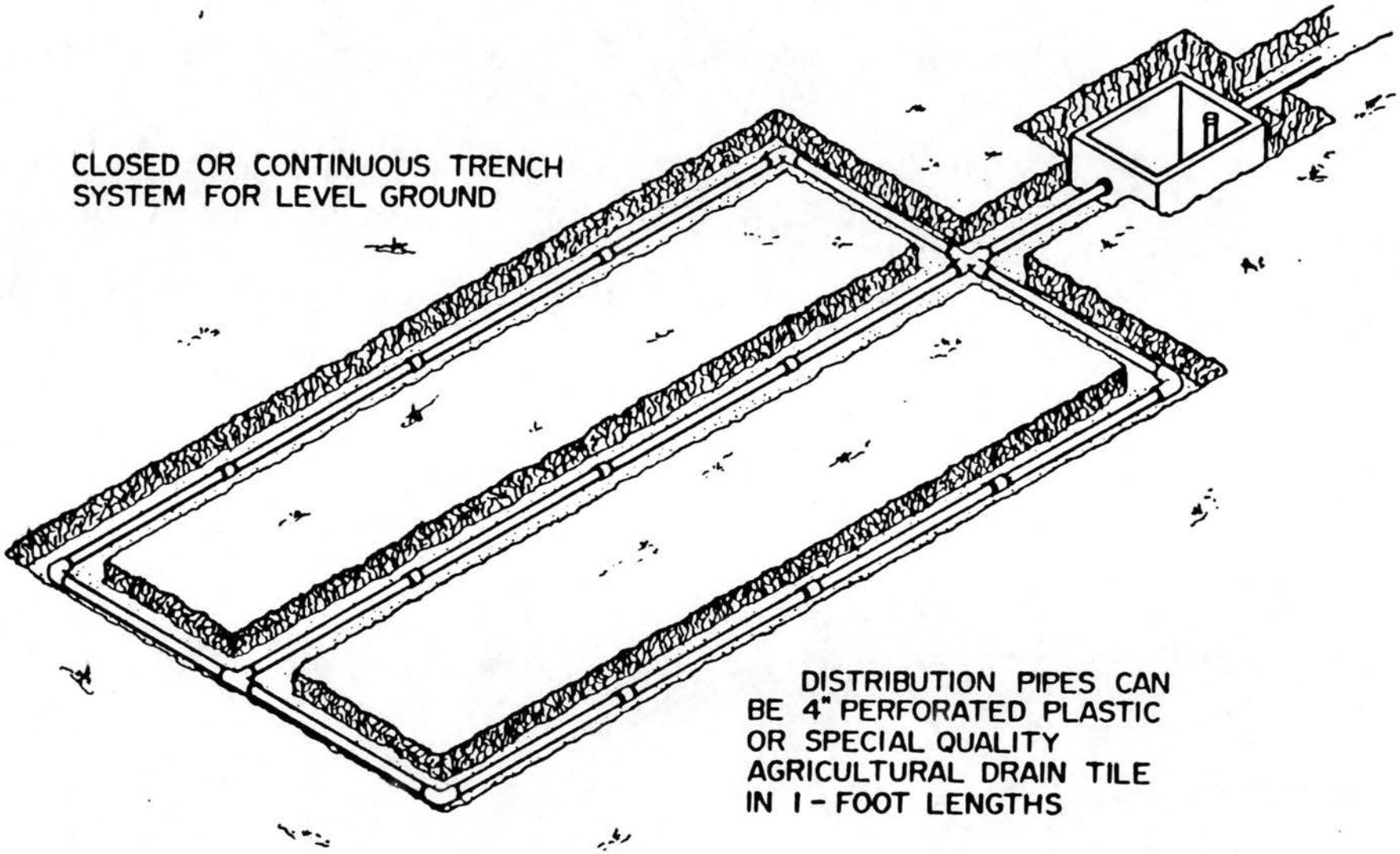
CLOSED OR CONTINUOUS TRENCH
SYSTEM FOR LEVEL GROUND
DISTRIBUTION PIPES CAN
BE 4" PERFORATED PLASTIC
OR SPECIAL QUALITY
AGRICULTURAL DRAIN TILE
IN 1 - FOOT LENGTHS

Figure 3

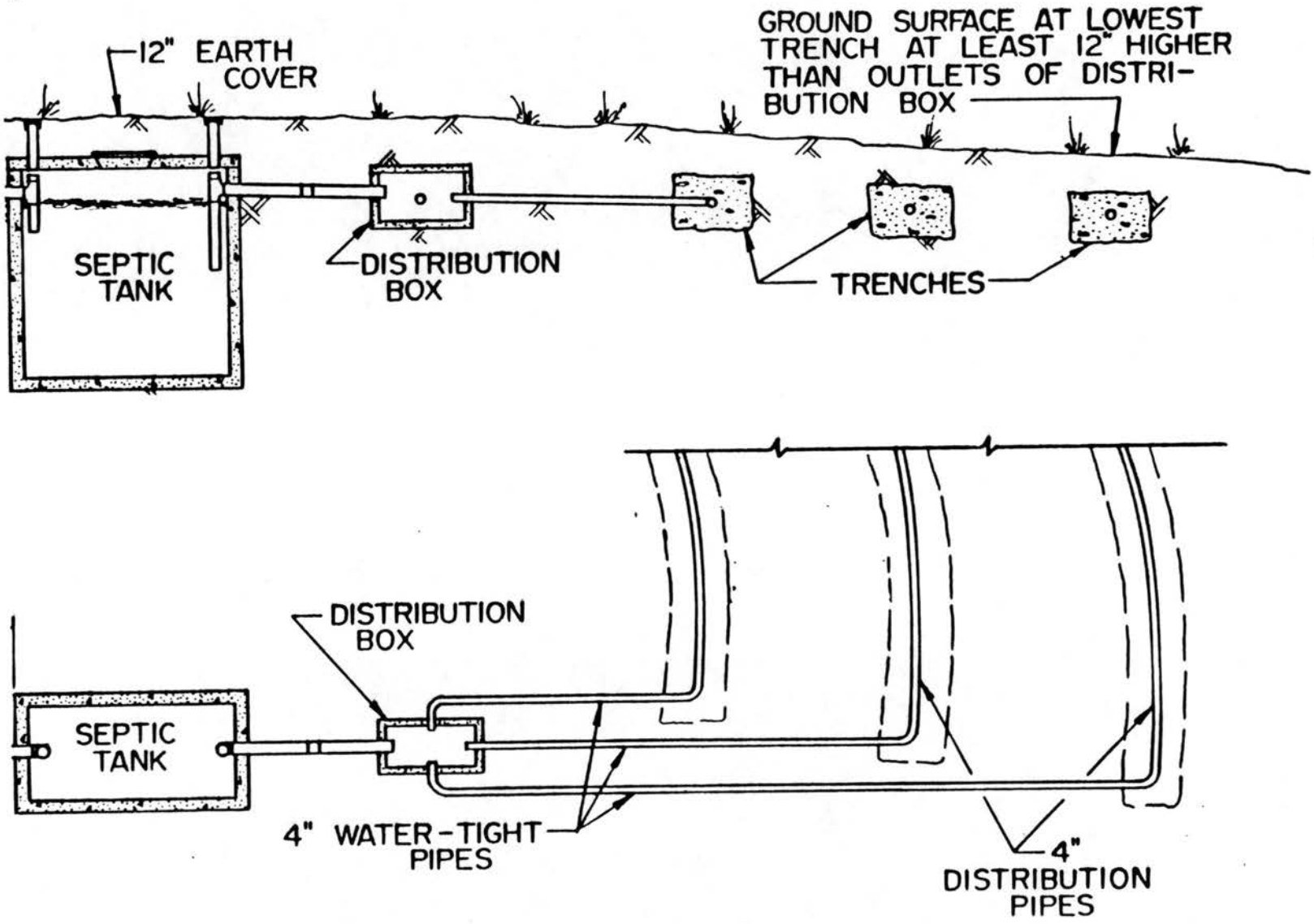

SEWAGE TREATMENT SYSTEM WITH DISTRIBUTION BOX

Figure 4

DISTRIBUTION BOX

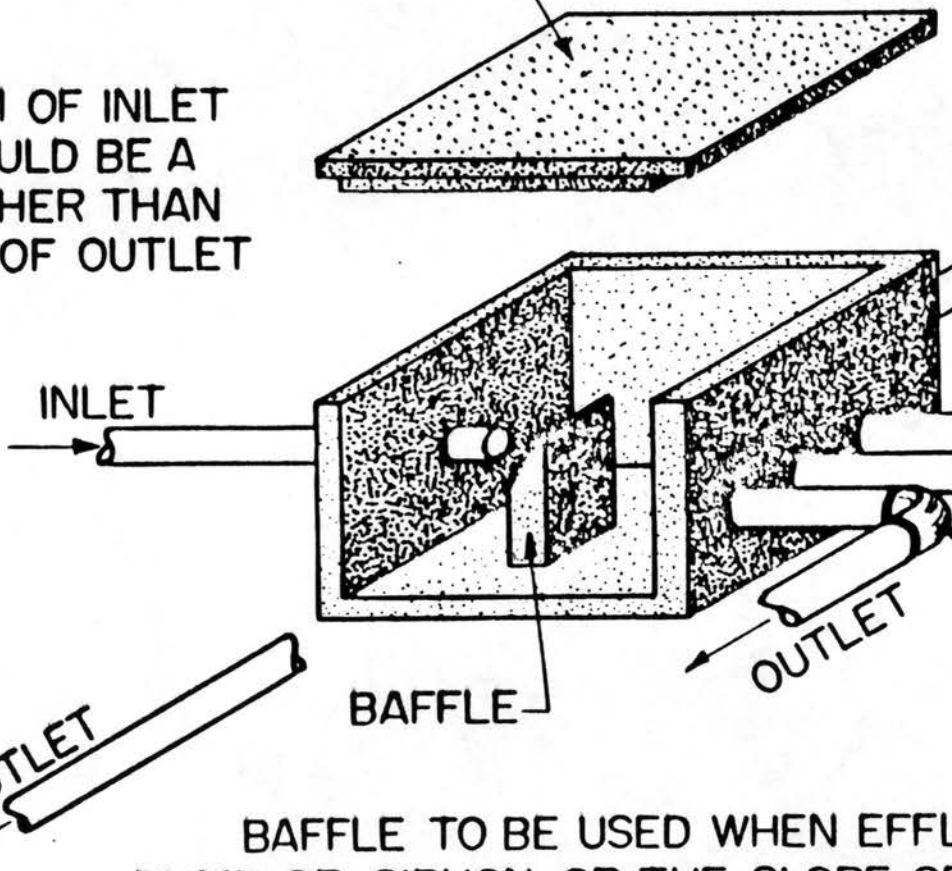

EACH TILE FIELD LATERAL SHALL BE CONNECTED SEPARATELY AND NOT SUBDIVIDED. INVERTS SHALL BE AT THE SAME ELEVATION.

OUTLET PIPES SHOULD HAVE EQUAL SLOPE FOR 5 FEET AFTER LEAVING BOX.

90° OR 45° ELBOWS TO OBTAIN DESIRED LATERAL TILE LINE SEPARATION.

BAFFLE TO BE USED WHEN EFFLUENT IS DELIVERED BY PUMP OR SIPHON, OR THE SLOPE OF THE INLET LINE IS SUCH THAT UNEVEN DISTRIBUTION COULD OCCUR. TOP OF THE BAFFLE AT LEAST LEVEL WITH THE CROWN OF THE INLET PIPE.

Figure 5

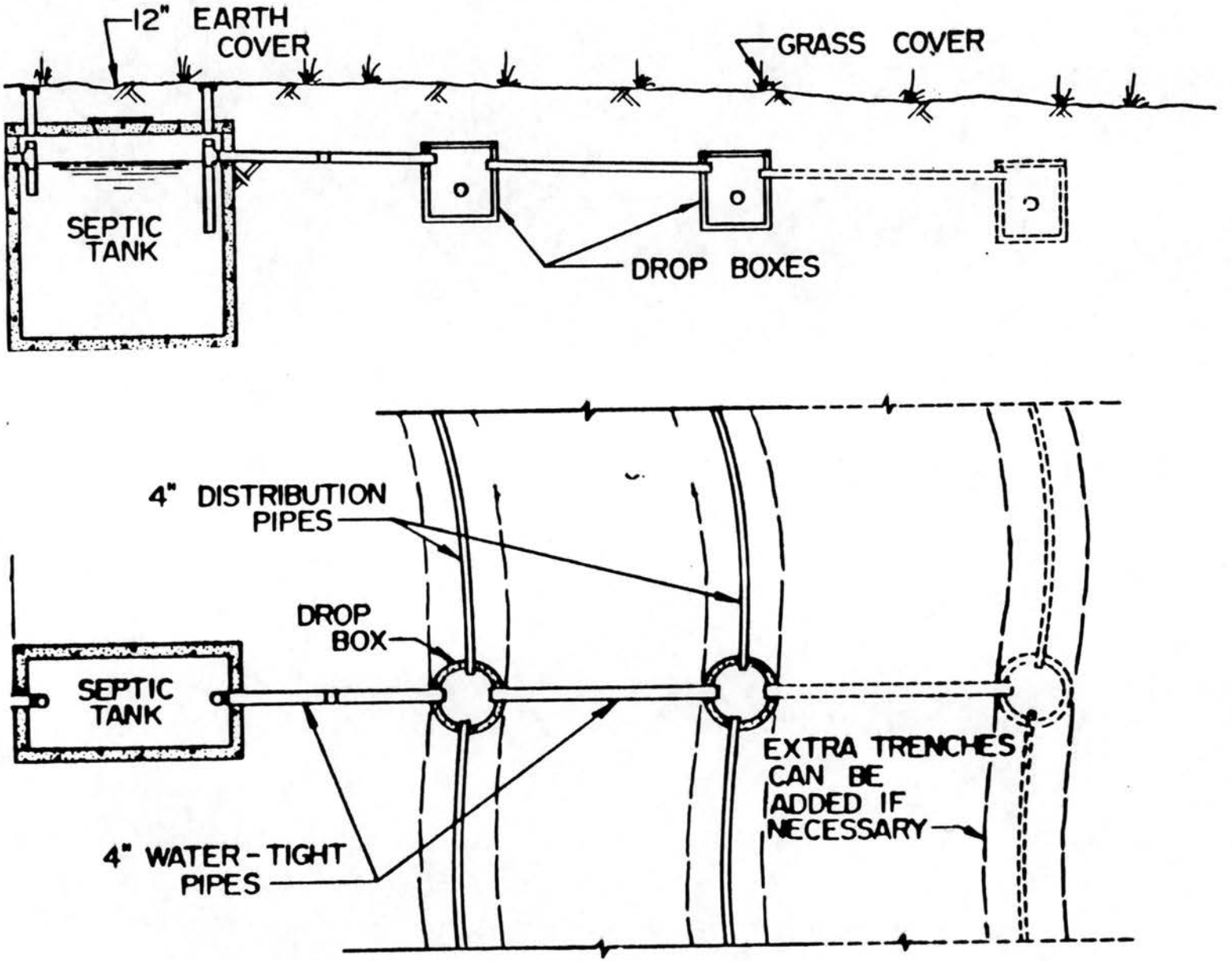

SEWAGE TREATMENT SYSTEM WITH DROP BOXES

Figure 6

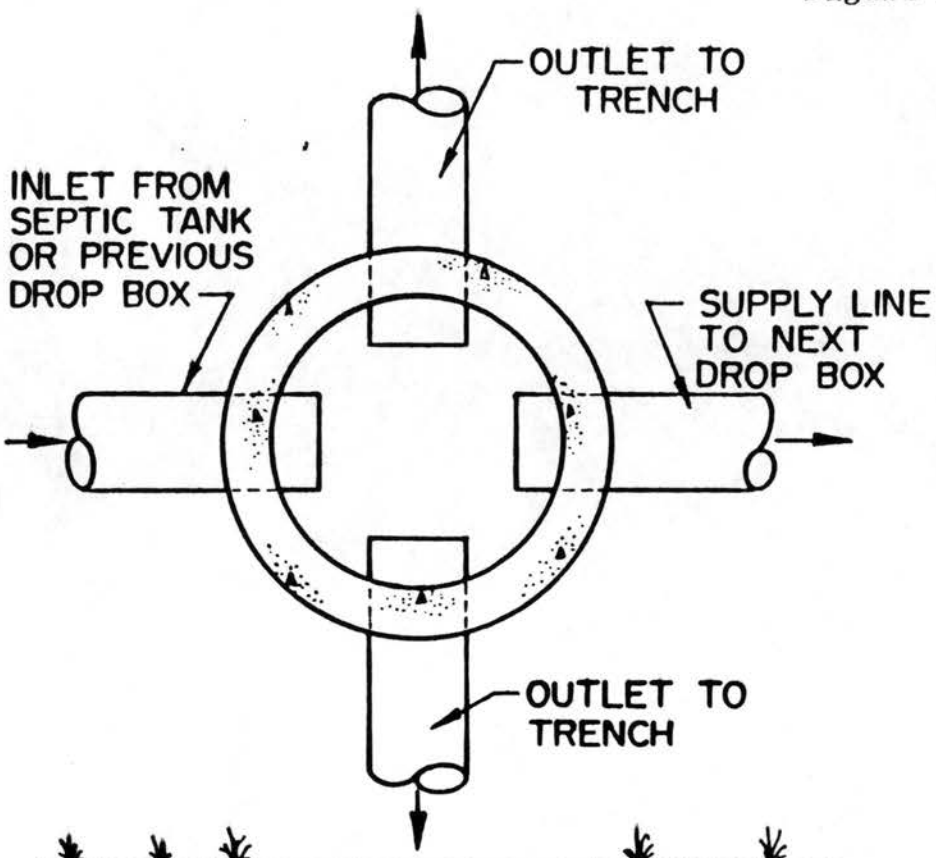

NOTES

1. ALL PIPES SHOULD BE AT LEAST 4 - INCH DIAMETER
2. ELEVATION OF INLET AND SUPPLY LINE TO NEXT DROP BOX MAY BE ADJUSTED UP OR DOWN FOR DESIRED EFFLUENT LEVEL IN TRENCH
3. SUPPLY PIPE SHALL BE AT LEAST TWO INCHES ABOVE INVERT OF OUTLET PIPE
4. INVERT OF INLET MUST BE AT LEAST ONE INCH HIGHER THAN INVERT OF SUPPLY PIPE TO NEXT DROP BOX
5. TRENCHES MAY OUTLET ONE SIDE OR BOTH SIDES OF DROP BOX

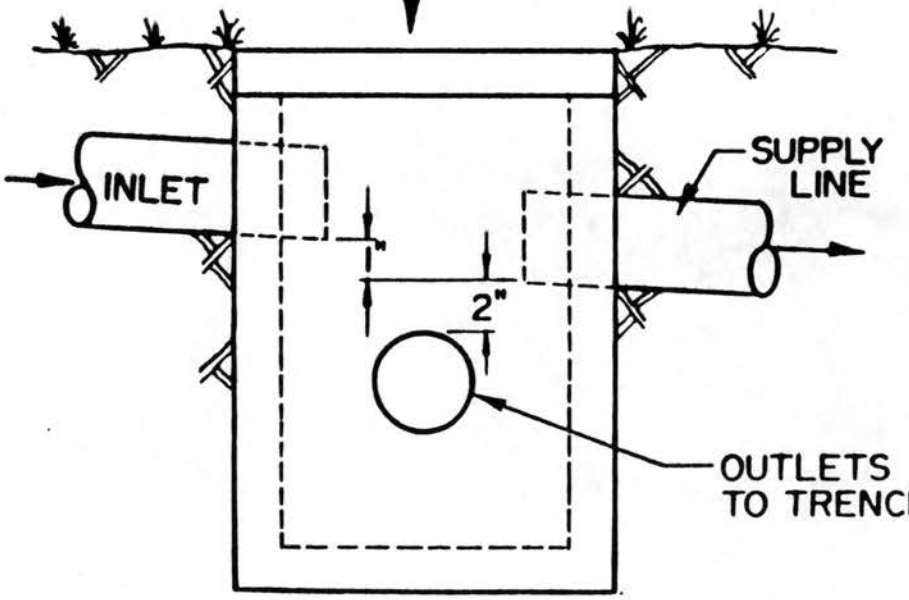

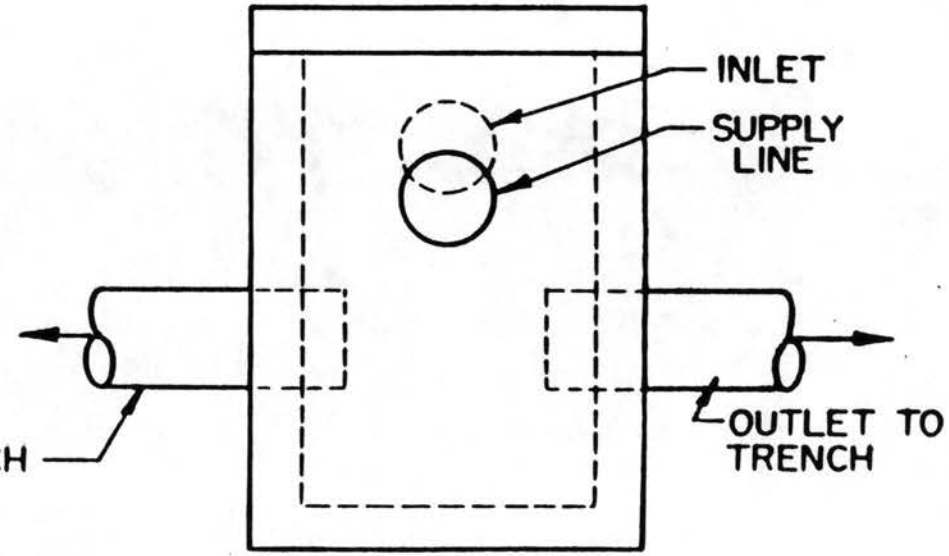

DROP BOX

Figure 7

LAYOUT OF PERFORATED PIPE LATERALS FOR PRESSURE DISTRIBUTION

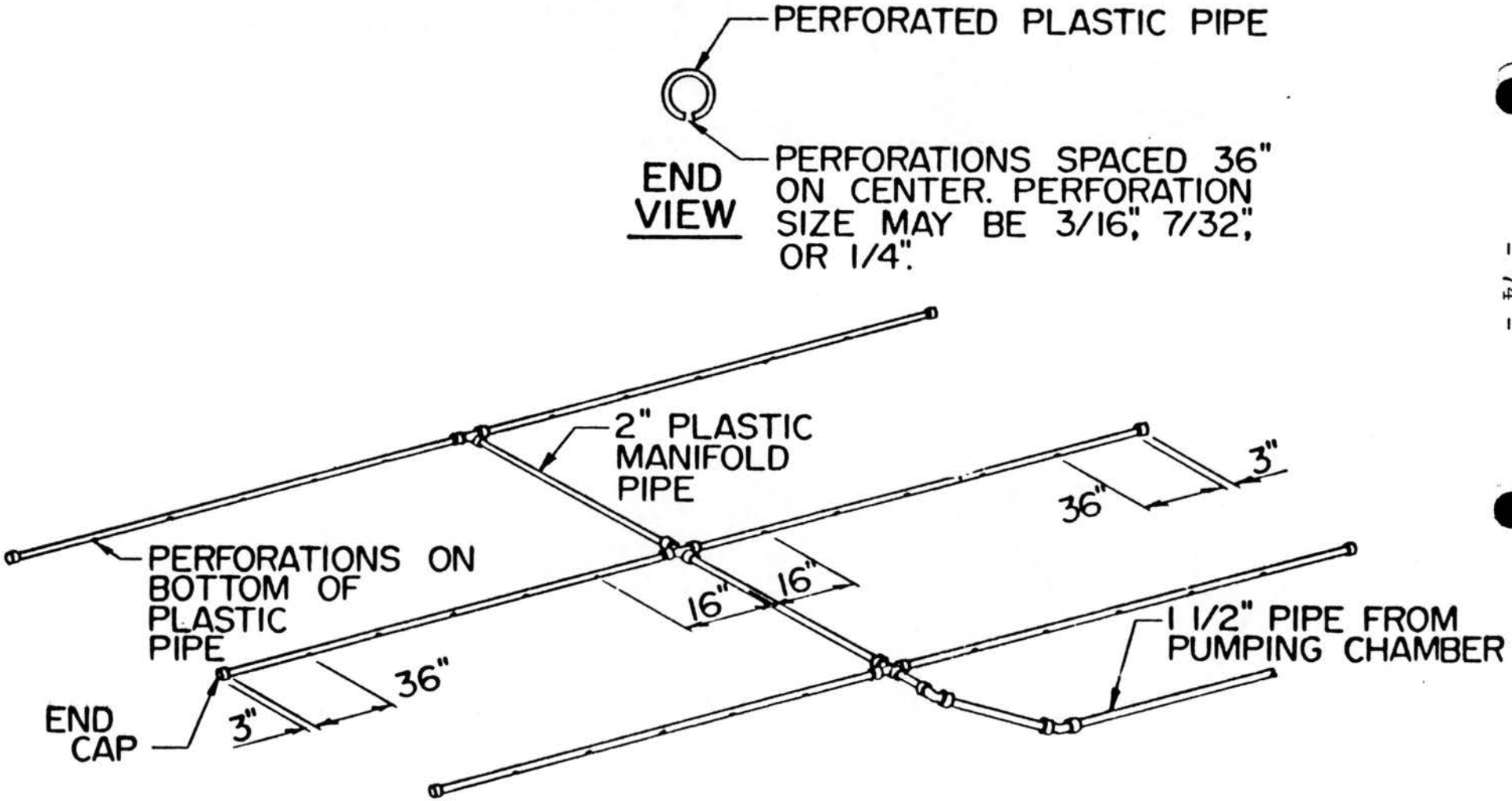

Figure 8

TRENCH CONSTRUCTION DETAILS

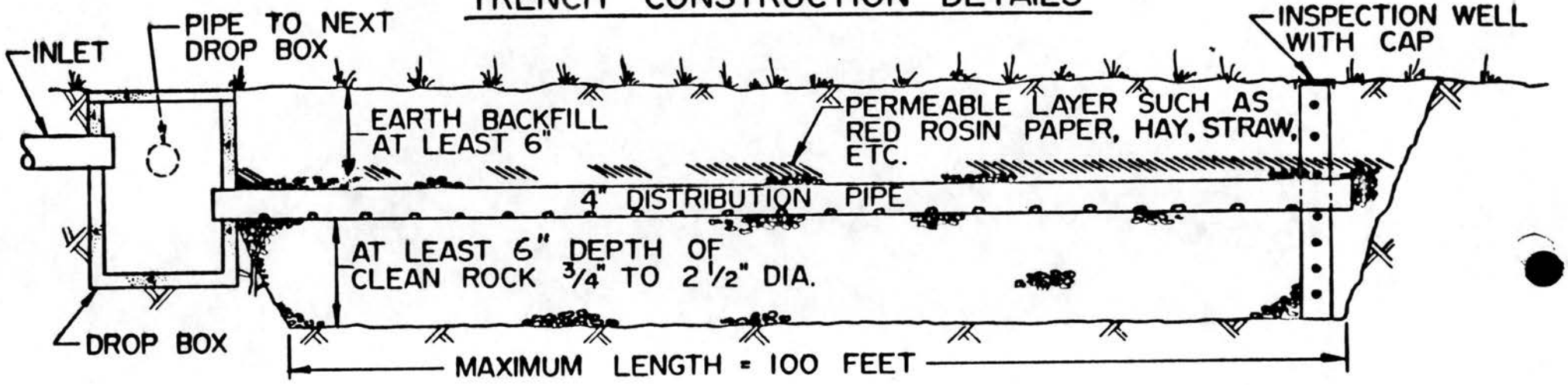

NOTE : BOTTOM OF TRENCH MUST BE FLAT ALONG LENGTH

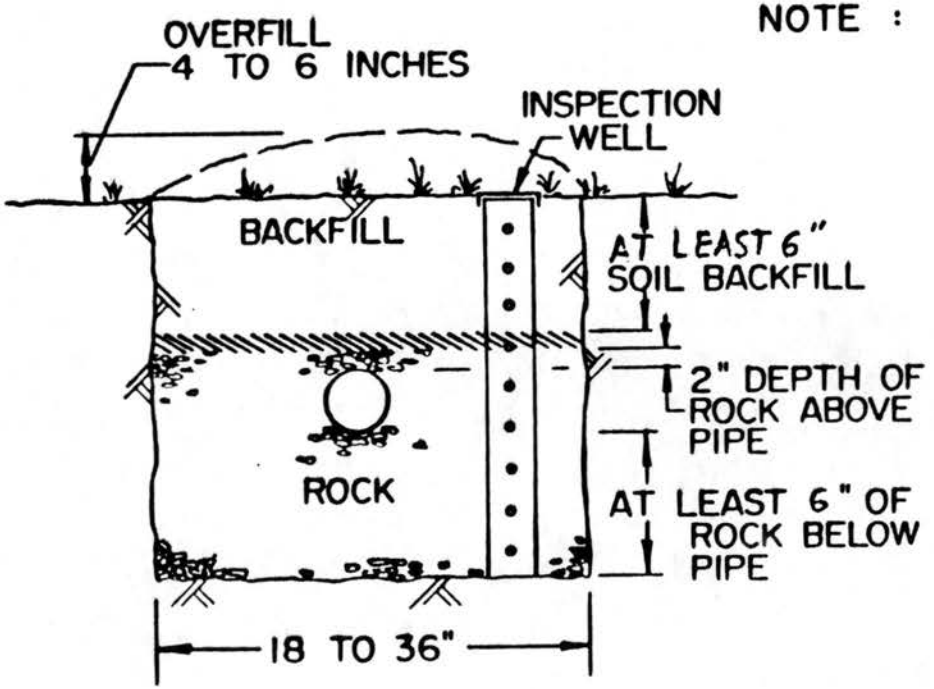

Figure 9

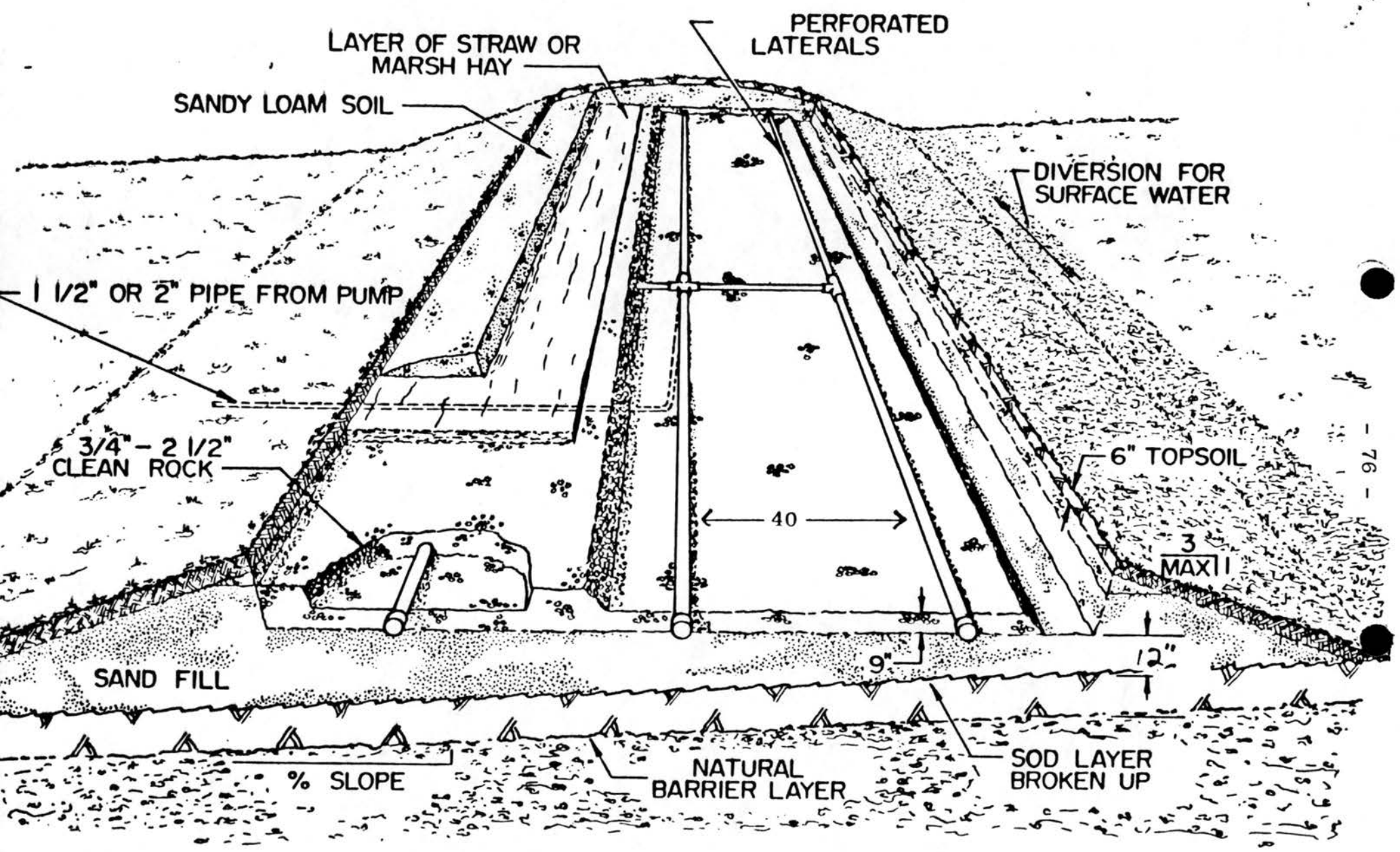

SEWAGE TREATMENT MOUND (PRESSURE DISTRIBUTION)

APPENDIX C

MHD 123 Materials

(a) Quality of Materials. All materials used in any drainage or plumbing system or part thereof, shall be free from defects, and no materials which are damaged or defective, shall knowingly be installed.

(b) Identification of Materials. All materials must be marked, unless otherwise easily identifiable, so as to provide a visual means of identification as to types, grades, weights, and strengths. The installer shall, as far as possible, position the identification marks so as to provide ease of inspection by the Administrative Authority.

(c) Standards for Plumbing Materials

(1) Approved Materials. A material shall be considered approved if it meets one or more of the standards cited in Table 123(c)(3) Standards for Plumbing Materials. Materials not listed in Table 123(c)(3) shall be used only as provided for in MHD 122(h)(3), or as permitted elsewhere in this Code.

(2) Abbreviations. Abbreviations in Table 123(c)(3) refer to the following:

ANSI — American National Standards Institute
10 East 40th Street
New York, New York 10016

ASTM — American Society for Testing and Materials
1916 Race Street
Philadelphia, Pennsylvania 19103

AWWA — American Water Works Association
2 Park Avenue
New York City, New York 10016

CS — Commercial Standards Available From:
Commodity Standards Division
Office of Industry and Commerce
U. S. Department of Commerce
Washington, D. C. 20234

FS — Federal Specifications Available From:
Federal Supply Service
Standards Division—General Services Administration
Washington, D. C. 20406

NSF — National Sanitation Foundation
Ann Arbor, Michigan 48106

FHA — Federal Housing Authority
Architectural Standards Division
Washington, D. C.

TABLE 123 (C) (3)
STANDARDS FOR PLUMBING MATERIALS

DESCRIPTION	ANSI	ASTM	FS	OTHER
I. CAST IRON PIPE & FITTINGS	A21.2 A21.6	A-74	WW.P.401C	CS188
1A Cast Iron Pipe & Fittings Extra Heavy	A21.8			
1B Cast Iron Pipe Centrifugally Cast only and fittings	A21.6	A-74	WW.P.401C	CS188
Service Weight	A21.8			
1C Cast Iron Mechanical (Gland Type) Pipe	A21.11 A21.2 A21.6		WW-P-421a	
1D Cast Iron Mechanical (Gland Type) Pipe Cement Lined	A21.8 A21.4 A21.2 A21.6 A21.8			
1E Cast Iron Short Body Water Service Fittings (2"-12")	A21.10			AWWA C100
1F Cast Iron Threaded Pipe	A40.5			
1G High Silicon Pipe, Fittings Cast Iron			WW-P-501	
1H Cast Iron Threaded Fittings Black and galvanized 125#	B16.4		WW-P-491	
1J Cast Iron Drainage Fittings Black and Galvanized	B16.12			
1K Hubless Cast Iron Pipe and Fittings (amended 8-31-72)				CISPI Standard 301-69T

* * * * *

V. SILICA AND EARTH PRODUCTS PIPE AND FITTINGS, NON METALLIC			
5A Asbestos—Cement Pressure Pipe and Fitting	C500 C296	SS-P351	
5B Asbestos—Cement Water Pipe and Fittings	C500	SS-P-351	AWWA C400
5C Asbestos—Cement Non Pressure Pipe and Fittings	C428	XX-P-331	
5D Asbestos—Cement Perforated Underdrain Pipe and Fittings	C508		
5E Vitrified Clay Pipe, Standard Strength and Stronger fittings	C13 C200		
5F Unglazed Clay Pipe, Extra Strength and fittings	C278		
5G Perforated Clay Pipe and Fittings	C211		
5H Borosilicate Glass Pipe and Fittings 60 psi			
5J Non Reinforced Concrete Draintile	C412		AASHO M178

5K Non Reinforced Concrete Pipe.....	C14	SS-P-371	AASHO M86
5L Perforated Concrete Pipe, Underdrainage...	C444		
5M Reinforced Concrete Pipe.....	C76	SS-P-375	
5N Reinforced and Prestressed Concrete Pipe, Pressure Type and Fittings.....			
5O Bituminized Fiber Drain and Sewer Pipe...	D1860	SS-P-1540A	(Amended 8-31-72)
5P Perforated Bituminized Fiber Pipe for General Drainage.....	D2311	SS-P-1540A	(Amended 8-31-72)
VI. PLASTIC PIPE AND FITTINGS DRAIN, WASTE AND VENT			
6A Acrylonitrile-Butadiene-Styrene (ABS)..... Type 1, Schedule 40.....	D2661	L-P-322a FHA-MPS	HSF14 CS270
6B Polyvinyl Chloride (pvc)..... Schedule 40 Unthreaded..... Schedule 80 can be threaded	D2665	L-P-320a FHA-MPS	NSF14 CS272
BUILDING SEWER.....		L-P-001221	
6C (1) Styrene—Rubber.....	D2852	(Filed 4-5-73)	CS228
6C (2) Polyvinyl Chloride (pvc)..... (Amended 4-5-73)	D3033 D3034	FHA-UM-26 WW-P-00380a	

* * * * *

(d) Piping System Materials

* * * * *

(4) Building Sewers

(aa) Cast Iron 1A and 1B and fittings and Hubless Cast Iron 1K. *(Amended 6-26-72)*

(bb) Cast Iron 1C and 1D with 1E fittings.

(cc) Asbestos Cement 5A and 5C and fittings laid on a continuous granular bed and only in yard areas.

(dd) Clay pipe and fittings 5E laid on a continuous granular bed.

(ee) Concrete pipe 5K in yard areas and not under permanent streets, laid on a continuous granular bed.

(ff) Concrete 5N.

(gg) Plastic 6A, 6B, 6C(1), and 6C(2) laid on a continuous granular bed in yard areas. *(Amended 4-5-73)*

(hh) Bituminized-fiber drain and sewer pipe 50, laid on a continuous granular bed. *(Amended 8-31-72)*

* * * * *

MHD 124 Joints and Connections

(a) Types of Joints for Piping Materials

(1) Tightness. Joints and connections in the plumbing system shall be gastight and watertight for the pressure required by test, with the exception of those portions of perforated or open joint piping which are installed for the purpose of collecting and conveying ground or seepage water.

(2) Types of Joints

(aa) Caulked Joints. Caulked joints for cast-iron bell and spigot soil pipe shall be firmly packed with oakum or hemp and filled with molten lead not less than 1 inch deep and shall extend not more than ⅛ inch below rim of hub. No paint, varnish, or any other coatings shall be permitted on the jointing material until after the joint has been tested and approved. Lead shall be caulked tight.

(bb) **Threaded Joints—Screwed Joints.** Threaded joints shall conform to American National taper pipe thread, ASA - B2.1 - 1945 or FS GGG - P - 351a. All burrs shall be removed. Pipe ends shall be reamed out to size of bore and chips removed. Pipe joint compound shall be used on male threads only.

(cc) **Wiped Joints.** Joints in lead pipe or fittings, or between lead pipe or fittings and brass or copper pipe, ferrules, solder nipples, or traps, shall be full wiped joints. Wiped joints shall have an exposed surface on each side of the joint not less than ¾ inch, and a minimum thickness at the thickest part of the joint of not less than ⅜ inch. Joints between lead pipe and cast iron, steel, or wrought iron shall be made by means of a caulking ferrule, soldering nipple, or bushing.

(dd) **Soldered or Brazed Joints.** Joints with copper tube with solder joint fittings shall be soldered or brazed. Surfaces to be soldered or brazed shall be thoroughly cleaned. Joints to be soldered shall be properly fluxed with non-corrosive paste type flux. Solder used for joints shall have a nominal composition of 50% tin and 50% lead, or 95% tin and 5% antimony, conforming to ASTM Standard Specification for soft solder metal B32-60T. Joints to be brazed shall be properly fluxed with a flux suitable for brazing material which is used. Brazing material shall conform to ASTM Standard Specification for Brazing Filler Metal B260-52T.

(ee) **Flared Joints.** Flared joints for soft copper water tubing shall be made with fittings meeting approved standards. (See Table 123(c)(3)) The tubing shall be reamed and expanded with proper flaring tools.

(ff) **Hot-poured Joints.** Hot-poured compound for clay or concrete sewer pipe, or other materials, shall not be water absorbent, and when poured against a dry surface shall have a bond of not less than 100 pounds per square inch. All surfaces of the joint shall be clean and dried before pouring. If wet surfaces are unavoidable, a suitable primer shall be applied.

The compound shall not soften sufficiently to destroy the effectiveness of the joint when subjected to a temperature of 160° Fahrenheit nor soluable in any of the waste carried by the drainage system. Approximately 25% of the joint space at the base of the socket shall be filled with jute or hemp. A pouring collar, rope, or other device shall be used to hold the hot compound when pouring. Each joint shall be poured in one operation until the joint is filled. Joints shall not be tested until one hour after pouring.

(gg) **Cold Joint Compound (Tar Base).** Cold joint compound (tar base) for clay and concrete pipe shall not be water absorbent, and shall bond itself to vitrified clay and concrete pipe. Half of the joint must be packed with oakum, and the remainder with cold tar compound.

(hh) **Gasket Type Joints. Resilient Rubber Joints for Clay or Concrete.** Flexible joints between lengths of clay or concrete pipe may be made by using approved resilient or rubber materials, both on the spigot end and in the bell end of the pipe.

(ii) **Cement Mortar Joints.** Except for repairs and connections of existing lines constructed with such joints, cement mortar joints are prohibited. Where permitted, cement mortar joints shall be made in the following manner: A layer of jute or hemp shall be inserted into the base of the annular joint space and packed tightly to prevent mortar from entering the interior of the pipe or fitting. Not more than 25% of the annular space shall be used for jute or hemp. The remaining space shall be filled in one continuous operation with a thoroughly mixed mortar composed of one part cement and two parts sand, with only sufficient water to make the mixture workable by hand. Additional mortar of the same composition shall then be applied to form a one to one slope with the barrel of the pipe. The bell or hub of the pipe shall be left exposed and when necessary the interior of the pipe shall be swabbed to remove any mortar or other material which may have found its way into such pipe.

(jj) **Burned Lead Joints.** Burned (welded) lead joints shall be fused together to form a uniform weld at least as thick as the lead being joined.

(kk) **Asbestos Cement Sewer Pipe Joints.** Joints in asbestos cement pipe shall be made with sleeve couplings of the same composition as the pipe, sealed with rubber rings. Joints between asbestos cement pipe and metal pipe shall be made by means of an adapter coupling caulked as required in MHD 124(a)(2)(aa). No adapted coupling shall be used that does not have a center ridge. Pipe must not be able to pass through the coupling.

(ll) **Mechanical Joints**

(ll-1) **Mechanical Joints for Cast-Iron Water Pipe.** Mechanical joints in cast-iron water pipe shall be made by means of a flanged collar and rubber ring gasket, secured by the use of an adequate number of

steel bolts. .The rubber sealing ring shall conform to A.S.A. A21-Point 11 Requirements.

(ll-2) **Mechanical Joints in Cast-Iron Soil Pipe.** Mechanical joints in cast-iron soil pipe shall be made by means of a preformed molded rubber ring, secured by pulling the pipe and fittings together in such a way as to compress the molded rubber ring in a manner that will assure a gas and water tight joint. The rubber sealing ring shall conform to A.S.T.M. 564-65 requirements.

(ll-3) **Mechanical Joints in Chemical Waste Pipe.** Mechanical joints in chemical waste pipe, of prestressed, low-expansion borosilicate glass pipe and high silicon content cast-iron pipe, shall be joined by means of a stainless steel corrosion resistant clamp assembly, or a clamp assembly utilizing a fiberglass reinforced nylon shell surrounding a sealing sleeve of an elastomeric material containing an approved acid and corrosion resistant seal ring or gasket in such a manner that the sleeve and ring seal or gasket are firmly compressed by the tightening device in order that a gas and water tight joint is provided. The sleeves or bands for this type joint shall be marked with the words "All Stainless", or the recognized abbreviation therefore, and marked with the pipe size for which its use is intended. Fiberglass reinforced shells must bear the manufacturer name. The sleeve must be used as factory assembled. During installation assembly, the pipe or fittings must be inserted into the sleeve so as to be firmly seated against the center rib or shoulder of the gasket, and on all field cut lengths the ends must be as square and smooth as possible. *(Amended 6-26-72)*

(ll-4) **Mechanical Joints in Hubless Cast Iron Soil Pipe.** Mechanical joints for hubless cast iron soil pipe and fittings shall be made by using a neoprene sleeve and stainless steel retaining band as specified in CISPI standard 301. *(Amended 6-26-72)*

(ll-5) **Mechanical Pipe Couplings and Fittings.** Couplings shall be made with the housing fabricated in two or more parts of malleable iron castings in accordance with Federal Specification QQ-I-666c, Grand 11, or with ASTM A47 or ASTM A339. The coupling gasket shall be molded synthetic rubber, per ASTM D-735-61, Grade No. R615BZ. Coupling bolts shall be oval neck track head type with hexagonal heavy nuts, per ASTM-A-183-60, or ASTM A325.

Pipe fittings used with these pipe couplings shall be fabricated or malleable iron castings in accordance with Federal Specifications QQ-I-666c, Grade 11, or with ASTM A47; ductile iron ASTM A339; segweld steel ASTM53 or A106.

These couplings and fittings may be used above ground, for storm drains and leaders and for water distribution pipe provided exposed parts in contact with water are galvanized. *(Amended 6-26-72)*

(mm) **Plastic Joints.** Every joint in plastic piping shall be made with approved fittings by either solvent welded or fusion welded connections or with approved insert fittings and metal clamps and screws of corrosion resistant material or threaded joints according to accepted standards. All solvent materials must meet approved recognized standards.

(nn) **Bituminized Fiber Drain Pipe Joints.** Pipe and bends shall be provided with accurately machined or molded tapered joints, and a taper-

sleeve coupling shall be provided for each length of pipe and for each bend. The slope of the taper in both pipe and coupling shall be 2°. *(Amended 6-26-72)*

(3) Use of Joints

(aa) **Clay Sewer Pipe.** Joints in clay sewer pipe, or between such pipe and metal pipe shall be made as provided in MHD 124(a)(2)(ff),(gg), (hh), and (ii).

(bb) **Concrete Sewer Pipe.** Joints in concrete sewer pipe, or between pipe and metal pipe, shall be made by means as provided in MHD 124(a)(2)(ff),(gg),(hh) and (ii).

(cc) **Cast-Iron Pipe.** Joints in cast-iron shall be either caulked or screwed, as provided in MHD 124(a)(2)(aa),(bb), and (cc).

(dd) **Cast-Iron Soil Pipe.** Joints in cast-iron soil pipe may be made by means as provided in MHD 124(a)(2)(aa) or (ll-2).

(ee) **Threaded Pipe to Cast-Iron.** Every joint between wrought iron, steel, brass, copper and cast-iron pipe shall be either caulked or threaded joints as provided in MHD 124(a)(2)(aa),(bb) and (cc) and shall be made with approved adapter fittings.

(ff) **Lead to Cast-Iron, Wrought Iron and Steel.** Joints between lead and cast-iron, wrought iron, or steel shall be made by means of wiped joints to a caulking ferrule, soldering nipple or bushing as provided in MHD 124(a)(2)(cc).

(gg) **Copper Water Tube.** Joints in copper water tubing shall be made either by the appropriate use of approved brass or wrought copper water fittings properly soldered or brazed, or by means of approved flared fittings as provided in MHD 124(a)(2)(ee).

(hh) **Plastic Pipe Joints.** Joints in plastic pipe or between plastic and cast-iron, steel, brass or copper pipe shall be made as provided in MHD 124(a)(2)(mm).

(ii) **Bituminized Fiber Pipe Joints.** Joints in bituminized fiber pipe shall be made as provided for in MHD 124(a)(2)(nn). *(Amended 6-26-72)*

(4) Special Joints

(aa) **Copper Tubing to Threaded Pipe Joints.** Joints from copper tubing to threaded pipe shall be made by the use of brass or copper adapter fittings. The joint between the copper pipe and fitting shall be properly soldered, brazed or flared.

(bb) **Cast-Iron to Copper Tube.** Caulked joints between copper tubing and cast-iron soil pipe shall be made by means of brass or copper ferrules or other approved adapter fittings.

(cc) **Slip Joints.** In drainage piping, slip joints shall be used only on the inlet side of the trap or in the trap seal. Every slip joint shall be made using approved packings of gasket material or approved ground joint brass compression rings. Ground faced connections which allow

adjustments of tubing but provide a durable rigid joint when made up shall not be considered as a slip joint.

(dd) **Expansion Joints.** Every expansion joint shall be of an approved type and the material used in its manufacture shall be compatible with the type of piping in which it is installed. Every expansion joint, other than an expansion loop, shall be accessible. (Also see MHD 133(i))

(ee) **Bituminized Fiber to Other Types of Pipe.** When connecting bituminized fiber pipe to other types of materials, only approved types of fittings and adaptors designed for the specific transition intended shall be used. *(Amended 6-26-72)*

(5) **Flanged Fixture Connections.** Fixture connections between drainage pipes and water closets, pedestal urinals, and earthenware trap standards shall be made by means of brass, plastic, or iron flanges, caulked, soldered, solvent welded, or screwed to the drainage pipe. The connection shall be bolted, with an approved gasket, washer or setting compound between the earthenware and the connection. Floor flanges of other equivalent materials may be used when approved by the Administrative Authority.

The bottom of the floor flange shall be set on the top of the finished floor or on a structurally firm base. Closet bends or stubs must be cut off so as to present a smooth surface, even with the top of the closet flange. Use of commercial putty or plastic as fixture setting compound is prohibited.

(6) **Prohibited Joints and Connections.** See MHD 131(b)(3).

(7) **Increasers and Reducers.** Brass or cast-iron body cleanouts shall not be used as a reducer or adapter from cast-iron soil pipe to steel or wrought iron pipe. Where different sizes of pipe or pipes and fittings are to be connected, the proper size increasers, reducers, or reducing fittings shall be used between the two sizes. Hexagon screwed bushings shall not be used in drainage piping.

MHD 125 Traps and Clean Outs

* * * * *

(b) **Drainage Pipe Cleanouts**

(1) **Location.** There shall be at least 2 cleanouts in the building drain, one at or near the base of the stack and one near the connection between the building drain and the building sewer. The cleanout at the outside wall may be inside or outside the building, and shall be made with a full "Y" branch fitting and shall extend at least 2 inches above grade or finished floor, except that the Administrative Authority may grant permission to use a flush cover in traffic areas.

A cleanout which is easily accessible shall be provided at or near the foot of each vertical soil or waste stack.

Each horizontal branch drain pipe shall be provided with a cleanout at its upper terminal, except that a fixture trap or a fixture with an integral trap, readily removable without disturbing concealed piping, may be accepted as a cleanout equivalent for this purpose.

(2) **Size of Cleanouts.** The cleanout shall be of the same nominal size as the pipes they serve up to 4 inches in diameter and not less than 4 inches for larger piping.

The distance between cleanouts in horizontal piping shall not exceed 50 feet for 3 inch or less in size and not over 100 feet for 4 inch and over in size.

(3) **Cleanout Materials.** The bodies of cleanout ferrules shall be made to standard pipe sizes, conform in thickness to that required for pipe and fittings of the same material and extend not less than ¼ inch above the hub. The cleanout cover or plug shall be of brass, cast-iron or approved plastic and be provided with a raised nut or recessed socket for removal.

Cleanouts for cast-iron soil pipe shall have cleanout covers made of brass and conform to specifications and details as shown in Figure 125(b)(3). Appendix B.

(4) **Cleanouts to be Accessible.** Each cleanout, unless installed under an approved cover plate or left flush with the finished floor, shall be at least 2 inches above grade, readily accessible and shall not be covered with cement, plaster, or other permanent finish material. Where a soil stack cleanout is located within 10 feet of where the building drain leaves the building, the cleanout at the outside wall may be eliminated.

MHD 131 Drainage Systems

(a) Determining Size of Drainage System

(1) Load on Drainage Piping. The load on drainage system piping shall be computed in terms of drainage fixture units in accordance with Table 131(a)(1) and MHD 131(a)(1)(aa), except the Administrative Authority may allow variations where it is shown by a bydraulic analysis of the piping system, submitted to the Administrative Authority, that such variation would result in a more desirable flow rate in the piping system.

TABLE 131 (a) (1)

FIXTURE UNIT VALUES FOR VARIOUS PLUMBING FIXTURES

Type of Fixture	Fixture Unit Value	Minimum Fixture Trap and drain size
Clothes Washer (Domestic Use)	2	1½
Clothes Washer (Public Use in Groups of 8 or more)	6 each	
Bath tub with or without shower	2	1½
Bidet	2	1½
Dental unit or cuspidor	1	1¼
Drinking Fountain	1	1¼
Dishwasher, Domestic	2	1½
Dishwasher, Commercial	4	2
Floor Drain with 2 inch waste	2	2
Floor drain with 3 inch waste	3	3
Floor Drain with 4 inch waste	4	4
Lavatory	1	1¼
Laundry Tray (1 or 2 Compartment)	2	1½
Shower Stall, Domestic	2	1½
Shower (Gang) per head	1	
SINKS:		
Combination, Sink and Tray (with disposal unit)	3	1½
Combination, Sink and Tray (with one trap)	2	1½
Domestic	2	1½
Domestic, with disposal unit	2	1½
Surgeons	3	1½
Laboratory	1	1½
Flushrim or Bedpan washer	6	3
Service	3	2
Pot or Scullery	4	2
Soda Fountain	2	1½
Commercial, Flat Rim, Bar or Counter	3	1½
Wash, Circular or Multiple (per set of faucets)	2	1½
URINAL Pedestal, Wall Hung, with 3 inch trap (Blowout and Syphon Jet)	6	3
Wall Hung with 2 inch trap	3	2
Wall Hung with 1½ inch trap	2	1½
Trough (per 6 foot section)	2	1½
Stall	3	2
WATER CLOSET	6	3
Unlisted Fixture or Trap Size		
1¼ inch	1	
1½ inch	2	
2 inch	3	
2½ inch	4	
3 inch	5	
4 inch	6	

(aa) **Values for Continuous Flow.** Fixture unit values for continuous or semi-continuous flow into the drainage system, such as from a pump, sump ejector, air conditioning equipment, or similar device shall be computed on the basis of one fixture unit for each gallon per minute flow.

(2) **Selecting Size of Drainage Piping.** Pipe sizes shall be determined from Table 131(a)(2)A and Table 131(a)(2)B on the basis of drainage load computed from Table 131(a)(1) and MHD 131(a)(1)(aa).

TABLE 131 (a) (2)A

MAXIMUM LOADS FOR HORIZONTAL DRAINS IN FIXTURE UNITS

Diameter of Drain	Horizontal Fixture Branch*- ¼ in/ft.	Building Sewer, Building Drain and Building Drain Branches-from Stacks**** Slope			
		1/16 in/ft.	⅛ in/ft.	¼ in/ft.	½ in/ft.
(inches)	(f.u.)	(f.u.)	(f.u.)	(f.u.)	(f.u.)
1¼	1				
1½	3				
2	6			21	26
2½	12			24	31
3**	32***		36***	42***	50***
4	160		180	216	250
5	360		390	480	575
6	620		700	840	1,000
8	—	1,400	1,600	1,920	2,300
10	—	2,500	2,900	3,500	4,200
12	—	3,900	4,600	5,600	6,700
15	—	7,000	8,300	10,000	12,000

*Includes Horizontal Branches of the Building Drain.
**No water closet shall discharge into a drain less than 3 inch.
***Not over 2 Water Closets.
****Every building drain that receives the discharge of (3) or more water closets, shall not be less than 4 inch in diameter. *(Amended 7-26-73)*

(3) **Minimum Size of Soil and Waste Stacks.** No soil or waste stack shall be smaller than the largest horizontal branch connected thereto except that a 4x3 water closet connection shall not be considered as a reduction in pipe size.

(4) **Minimum Size of Stack Vent or Vent Stack.** Any structure in which a building drain is installed shall have at least one stack vent or vent stack carried full size through the roof not less than 3 inches in diameter. Where one or more soil stacks are required to extend through the roof undiminished in size they should be the stack or stacks most remote from the location where the building drain leaves the building. When a soil or waste stack receives the discharge of fixtures located on 2 or more floors, and the uppermost fixture is located 3 or more floors above the building drain, such stack and stack vent shall continue undiminished in size through the roof. *(Amended 4-5-73)*

(5) **Provision for Future Fixtures.** When provision is made for future installation of fixtures, those provided for shall be considered in determining the required sizes of drain and vent pipes. Construction to provide for such future installations shall be terminated with a plugged fitting or fittings.

TABLE 131 (a) (2)B

MAXIMUM LOADS FOR SOIL AND WASTE STACKS IN FIXTURE UNITS

Diameter of Stack	Stacks of not more than 3 stories or Branch Intervals	Stacks of more than 3 stories or Branch Intervals	Total at One Story or Branch Interval
1¼*	2	2	1
1½*	4	4	2
2*	9	18	6
2½*	20	42	9
3	36***	72***	24**
4	240	500	90
5	540	1,100	200
6	960	1,900	350
8	—	3,600	600
10	—	5,600	1,000
12	—	8,400	1,500

*No water closets permitted.
**Not over 2 water closets permitted.
***Not over 6 water closets permitted, and not over 6 branch intervals on a 3 inch soil stack.

(Amended 12-26-72)

(6) **Minimum Size of Underground Drainage Piping.** No portion of the drainage system installed underground shall be less than 2 inches in diameter.

(7) **Sizing of Offsets on Drainage Piping**

(aa) **Offsets of 45 Degrees or Less.** An offset in a vertical stack with a change of direction of 45° or less from the vertical, may be sized as a straight vertical stack.

(bb) **Offsets of more than 45 Degrees.** A stack with an offset of more than 45 degrees from the vertical shall be sized as follows:

The portion of the stack above the offset shall be sized as for a regular stack based on the total number of fixture units above the offset.

The offset shall be sized as for a building drain branch. Table 131(a)(2)A Maximum Loads for Horizontal Drains.

The portion of the stack below the offset shall be sized at least as large as the offset. *(Amended 4-5-73)*

(cc) **Above Highest Branch.** An offset above the highest branch connection is an offset in the stack vent and shall be considered only as it affects the developed length of the vent.

(dd) **Below Lowest Branch.** In the case of an offset in a soil or waste stack below the lowest branch connection, there shall be no change in diameter required if the offset is made at an angle of not greater than 45 degrees from the vertical.

If such offset is made at an angle of greater than 45 degrees from the vertical, the required diameter of the offset and the stack below it shall be sized as for a building drain. (Table 131(a)(2)A)

(8) Fixture Connections to an Offset of More than 45° or at Base of Stack. When stacks in buildings of 5 or more stories in height receive the discharge of fixtures 4 or more stories above the offset, no fixtures on the floor at which the offset occurs shall be connected to the stack within 8 feet of the base of the offset measured vertically or horizontally. Said fixtures may also be connected into vertical section of the stack more than 2 feet below the offset. Fixture connections to horizontal piping at the bases of such stacks shall be made in the same manner, or at a point acceptable to the Administrative authority.

(b) Drainage Piping Installation

(1) Pitch or Horizontal Drainage Piping. Horizontal drainage piping shall be installed in uniform alignment at uniform slopes in accordance with the following requirements and in no case at a slope which will produce a computed velocity of less than 2 feet per second, unless otherwise permitted by the Administrative Authority, based on hydraulic analysis of the piping system.

Size of Piping	Minimum Slope
Less than 3 inches	1/4 inch per foot
3 inches to 6 inches	1/8 inch per foot
8 inches and over	1/16 inch per foot

(2) Change in Direction. Changes in direction in drainage piping shall be made by the appropriate use of 45 degree wyes, long or short sweep quarter bends, sixth, eighth, or sixteenth bends, or by combination of these or equivalent fittings. Single and double sanitary tees, quarter bends, and long turn ells may be used in drainage lines only where the direction of the flow is from the horizontal to the vertical.

(aa) Short Sweeps Permitted. Short sweep bends or long turn ells 3 inch or larger in diameter may be used in soil or waste lines where the change in direction of flow is from either the horizontal to the vertical or from the vertical to the horizontal.

(3) Prohibited Fittings and Connections. No fittings having a hub in the direction opposite to flow, or straight tee branch shall be used as a drainage fitting. No fitting or connection which has an enlargement chamber or recess with a ledge or shoulder, or reduction in pipe area shall be used. No drainage or vent piping shall be drilled, tapped, or welded unless otherwise permitted by the Administrative Authority. Fittings used for back-to-back, wall outlet, blowout type water closet bowls shall have a baffle plate or other device to prevent the waste water from one water closet from entering the opposite water closet. No fixture connection shall be made to a closet bend. No running threads, bands, or saddles shall be used. The short pattern fitting in a horizontal position is prohibited in underground work.

(aa) Heel or Side-Inlet Bends. A heel or side-inlet quarter bend shall not be used as a vent when the inlet is placed in a horizontal position or any similar arrangement of pipe or fittings producing a similar effect.

(bb) Obstruction to Flow. No fitting, connection, device or method of installation which obstructs or retards the flow of water, wastes, sewage, or air in the drainage or venting system in an amount greater than the normal frictional resistance to flow, shall be used unless it is indicated as acceptable to this Code by having a desirable and acceptable function and as of ultimate benefit to the proper and continuing functioning of the plumb-

ing system. The enlargement of a 3 inch closet bend or stub to 4 inches shall not be considered an obstruction, provided the horizontal flow line or insert is continuous without forming a ledge.

(4) **Dead Ends.** In the installation of a drainage system, dead ends shall be avoided except where necessary to extend piping for a cleanout so as to be accessible.

(5) **Building Drains Below Building Sewer.** Building drains which cannot be discharged to the sewer by gravity flow shall discharge into an approved watertight, gas tight vented sump or receiving tank, so located as to receive the sewage or wastes by gravity. From such sump or receiving tank the sewage or other liquid wastes shall be lifted and discharged into the building gravity drain by approved automatic pumping equipment. The system or drainage piping entering such sump shall be installed and vented as required in this section for a gravity system.

(aa) Design of Sumps

(aa1) Sumps and receiving tanks shall be constructed of poured concrete, metal, or other approved materials. If constructed of poured concrete, the walls and bottom shall be adequately reinforced and designed to acceptable standards. Metal sumps or tanks shall be of such thickness as to serve their intended purpose and shall be treated internally and externally to resist corrosion.

(aa2) The discharge line from such pumping equipment shall be provided with an accessible back-water valve and gate valve, and if the gravity drainage line to which such discharge line connects is horizontal, the method of connection shall be from the top through a wye branch fitting. The minimum size of any pump or discharge pipe from a sump having a water closet connected thereto shall not be less than 2 inches.

(aa3) Building drains or building sewers receiving discharge from any pumping equipment shall be adequately sized to prevent over-loading. In all buildings, other than single and 2 family dwellings, should 3 or more water closets discharge into the sump, duplicate pumping equipment shall be installed.

(aa4) Sumps and receiving tanks shall be provided with gastight metal covers, except that float control or switch rods shall operate without binding. Such cover shall be of a bolt and gasket type or equivalent manhole opening to permit access for inspection, repairs, and cleaning.

(bb) **Sump Vent.** The top of the sump tank shall be provided with a vent pipe which shall extend separately through the roof, or may be combined with other vent pipes. Such vent shall be large enough to maintain atmospheric pressure within the sump under all normal operating conditions and in no case less than in accordance with the number of fixture units discharging into the sump. When the foregoing requirements are met and the vent after leaving the sump, is combined with vents from fixtures discharging into the sump, the size of the combined vent need not exceed that required for the total number of fixtures discharging into the sump. No vent from an air operated sewage ejector shall combine with other vents.

(cc) **Clear Water Sumps.** Sumps and receiving tanks which receive only clear water drainage, and from which sewage is excluded, need not be air tight or vented.

MHD 134 Inspection, Tests and Maintenance

(a) **Inspections.** New plumbing systems and parts of existing systems which have been altered, extended or repaired shall be inspected and tested by the proper Administrative Authority to insure compliance with all the requirements of this Code and the installation and construction of the system in accordance with the approved plan and the permit, except that testing may be waived for work which does not include addition to, replacement, alteration, or relocation of any water supply, drainage or vent piping.

All the piping shall be tested and after the plumbing fixtures have been set, and before the system is put into use, the system shall be given a final inspection and test by the proper Administrative Authority.

(b) **Notifications**

(1) It shall be the duty of the plumbing contractor to notify the proper Administrative Authority and the Owner, or his authorized agent orally, by telephone, or in writing, not less than eight working hours between the hours of 8 a.m. and 4 p.m. before the work is to be inspected or tested.

(2) It shall be the duty of the plumbing contractor to make sure that the work will stand the test prescribed before giving the above notification.

(3) If the proper Administrative Authority finds that the work will not stand the test, the plumbing contractor shall be required to renotify as above.

(4) If the proper Administrative Authority does not appear for an inspection within 24 hours of the time set, excluding Saturdays, Sundays and Holidays, the inspection or test shall be deemed to have been made, and the plumbing contractor is required to file an affidavit with the proper Administrative Authority that the work was installed in accordance with the Code, the approved plans and permit, and that it was free from defects and that the required tests had been made and the system found free from leaks; also whether the owner or his authorized agent was present when such inspection or test was made.

(c) **Material and Labor for Tests.** The equipment, material, power, and labor necessary for the inspection and test shall be furnished by the plumbing contractor.

(d) **Method of Testing.** The air tests shall be applied to the plumbing drainage system in its entirety or in sections. Sections which are found satisfactory need not be retested after completion of the entire system unless considered necessary by the proper Administrative Authority.

(1) **Rough Plumbing.** Except for outside leaders and perforated or open drain tile, the piping of plumbing drainage and venting systems shall be air tested upon completion of the rough piping.

(aa) The air test shall be made by attaching the air compressor or testing apparatus to any suitable opening and closing all other inlets and outlets to the system by means of proper testing plugs. Plaster paris shall not be used in roof terminals.

(bb) Air shall be forced into the system until there is a uniform pressure of 5 pounds per square inch on the portion of the system being tested. The pressure shall remain constant for 15 minutes without the addition of air.

(2) **Finished Plumbing.** After the plumbing fixtures have been set and their traps filled with water, their connections shall be tested and proven gas and water tight by plugging the stack openings on the roof and the building drain where it leaves the building, and air introduced into the system equal to the pressure of a one inch water column. Such pressure shall remain constant for the period of inspection without the introduction of additional air.

(e) **Covering of Work.** No building drainage or plumbing system or part thereof shall be covered until it has been inspected, tested, and approved as herein prescribed.

(f) **Uncovering of Work.** If any building drainage or plumbing system or part thereof is covered before being regularly inspected, tested, and approved, as herein prescribed, it shall be uncovered upon the direction of the proper Administrative Authority.

(g) **Defective Work.** If the inspection or test shows defects, such defective work or material shall be replaced and the inspection and test repeated.

(h) **Building Sewer.** The building sewer shall be inspected by the proper Administrative Authority to insure compliance with the provisions of the Code.

* * * * *

(k) **Certificate of Approval.** Upon the satisfactory completion and final inspection of the plumbing system, a certificate of approval shall be issued by the proper Administrative Authority.

(l) **Air Test of Defective Plumbing.** The air test shall be used in testing the sanitary condition of the drainage or plumbing system of all buildings where there is reason to believe that it has become defective. In buildings condemned by the proper Administrative Authority because of insanitary conditions of the plumbing system, the alterations in such system shall not be considered as repairs, but as new plumbing.

Where buildings are moved from one location to another, or raised for foundations, or where part of the plumbing system has been damaged by fire, storm, or other means, a final air test shall be applied and shall hold tight, if in the opinion of the Administrative Authority it is warranted in order to assure a sanitary plumbing system.

* * * * *

(n) **Defective Fixtures.** All installed fixtures found defective or in an insanitary condition shall be repaired, replaced, or removed upon written notice from the proper Administrative Authorities.

(o) **Maintenance.** The plumbing system of every building shall be maintained in a sanitary and safe operating condition.

APPENDIX D

WATER WELL CONSTRUCTION CODE

MHD 217 Location of Wells

* * * * *

(c) Distance from Pollution or Contamination Sources

(1) A well shall be at least:

* * * * *

(dd) Fifty feet (50 ft.) from a buried sewer, septic tank, subsurface disposal field, grave, animal or poultry yard or building, privy, petroleum storage tank, or any other sewage or liquid wastes that may drain into the soil.

(ee) Twenty feet (20 ft.) from a buried sewer constructed of cast iron pipe with tested watertight joints or other material acceptable to the Board; or a pit or unfilled space below ground surface, except an approved basement.

(ff) Wells less than 50 feet in depth and not encountering at least 10 feet of impervious material shall be located at least 150 feet from cesspools, leaching pits, or dry wells and at least 100 feet from a subsurface disposal field, manure storage pile or other source of contamination.[3]

* * * * *

APPENDIX E

Cons 72 Sanitary Provisions

* * * * *

(b) SEWAGE AND WASTE DISPOSAL

* * * * *

(4) Septic tank and soil absorption systems shall be set back from the normal high water mark in accordance with class of public waters:

(aa) On Natural Environment Lakes and Streams, at least 150 feet;

(bb) On Recreational Development Lakes, at least 75 feet;

(cc) On General Development Lakes and Streams, at least 50 feet.

* * * * *

NR 79 Land Use Provisions

* * * * *

(d) SANITARY PROVISIONS

(1) The sanitary provision standards set forth in Minn. Regs. Cons. 72 of the Statewide Standards and Criteria for Management of Shoreland Areas of Minnesota shall apply to Wild, Scenic and Recreational river land use districts.

(2) However, the provisions of Cons. 72 (b) (4) are superseded by the following setback provisions for septic tank and soil absorption systems.

	Setback from the normal high water mark
Wild River	150 feet
Scenic River	100 feet
Recreational River	75 feet
Tributaries	75 feet

* * * * *

NR 83 LAND USE CONTROL PROVISIONS

* * * * *

(d) Sanitary Provisions

* * * * *

(1) Water Supply

* * * * *

(dd) Septic tank and soil absorption systems shall be set back from the ordinary high water mark in accordance with the class of public waters:

(i) On Natural Environment Waters, at least 150 feet;

(ii) On Recreational Development Waters, at least 75 feet; and

(iii) On General Development Waters, at least 50 feet.

* * * * *

APPROVED AS TO FORM AND LEGALITY
JUL. 12 1978 19__
WARREN SPANNAUS, ATTORNEY GENERAL
BY Lee E. Shelby
SPECIAL ASSISTANT ATTORNEY GENERAL

STATE OF MINNESOTA
DEPARTMENT OF STATE
FILED
JUL 14 1978
Joan Anderson Growe
Secretary of State
8:45 a.m.

STATE OF MINNESOTA

OFFICE OF THE ATTORNEY GENERAL

Address Reply To:
OFFICE OF ATTORNEY GENERAL
MINNESOTA POLLUTION CONTROL AGENCY
1935 W. County Road B2
Roseville, Minnesota 55113
612/296-7342

June 9, 1978

RECEIVED
JUN 9 1978
ATTORNEY GENERAL
ADMINISTRATIVE AGENCIES
from P.C.A.

Michael B. Miller, Esq.
Department of Administration
G19-k Administration Building
50 Sherburne Avenue
St. Paul, Minnesota 55155

Re: Adoption of Minn. Reg. WPC 40 Setting Forth Individual Sewage Treatment System Standards

Dear Mike:

I am enclosing the original and five copies of a short form of the Order Adopting Rules in the above-captioned matter.

Very truly yours,

John-Mark Stensvaag
Special Assistant
Attorney General

JMS:ms

Enclosures

STATE OF MINNESOTA

COUNTY OF RAMSEY

MINNESOTA POLLUTION

CONTROL AGENCY

In the Matter of the Proposed
Adoption of Minn. Reg. WPC 40
Setting Forth Individual Sewage
Treatment Systems Standards

NO. PCA-78-004-WS

ORDER ADOPTING RULES

The above-entitled matter came on for hearing before William Seltzer, Hearing Examiner, on the 7th day of November, 1977, at the Board Room of the Minnesota Pollution Control Agency, 1935 W. County Road B2, Roseville, Minnesota, commencing at 9:00 a.m., after proper notice required by Minn. Stat. §15.0412 (1976) was served on all persons, associations, and other interested groups registered with the Secretary of State for that purpose. Said hearing was duly recessed and reconvened at the following times at the following locations: Room 158 of the Student Center, Southwest State University, North Highway 23, Marshall, Minnesota, on November 10, 1977, commencing at 7:00 p.m.; the Crow Wing County Service Building, Brainerd, Minnesota, on November 14, 1977, commencing at 7:00 p.m.; Room 176 of the Messabi Community College, 9th Avenue & West Chestnut, Virginia, Minnesota, on November 15, 1977, commencing at 7:00 p.m.; the Beaux Arts Ballroom of Bemidji State University, 14th Street & Birchmont Drive, Bemidji, Minnesota, on November 16, 1977, commencing at 7:00 p.m.; Room S-209 of the Fergus Falls Community College, Highway 210 West, Fergus Falls, Minnesota, on November 17, 1977, commencing at 7:00 p.m.; and the Theater at Rochester Community College, East Highway 14, Rochester, Minnesota, on November 21, 1977, commencing at 7:00 p.m.

After affording interested persons an opportunity to present written and oral data, statements and arguments, having considered all of the evidence adduced and upon the records, files and proceedings herein, and applicable standards or criteria, and having confirmed the need for the above-captioned rules,

NOW, THEREFORE, IT IS ORDERED that, pursuant to authority vested in this Agency by Minn. Stat. §115.03 subd. 1(e)(1976), the rule identified as Minn. Reg. WPC 40, "Individual Sewage Treatment Systems Standards," is adopted this 25th day of April, 1978.

MINNESOTA POLLUTION CONTROL AGENCY

Joseph F. Grinnell
Chairman

Sandra S. Gardebring
Executive Director

Dated: April 25, 1978

Attorney General

John Mark Stensvaag
Special Assistant
Attorney General

June 29, 1978

Michael B. Miller
Special Assistant
Attorney General

296-4692

Rule WPC 40

The above-captioned rule is herewith returned without approval as to form and legality as the introductory paragraph to Appendix A makes it unclear whether the alternative standards in the appendix are mandatory. Specifically, the use of the word "guidelines" leaves this matter unclear.

When this language has been revised accordingly, please resubmit the rule to me and I will approve it.

MBM:mb

Enclosure

STATE OF MINNESOTA
OFFICE OF THE ATTORNEY GENERAL

Address Reply To:
OFFICE OF ATTORNEY GENERAL
MINNESOTA POLLUTION CONTROL AGENCY
1935 W. County Road B2
Roseville, Minnesota 55113
612/296-7342

June 7, 1978

RECEIVED
JUN 9 1978
ATTORNEY GENERAL
ADMINISTRATIVE AGENCIES

M.P.C.A.

Michael B. Miller, Esq.
Department of Administration
G19-k Administration Building
50 Sherburne Avenue
St. Paul, Minnesota 55155

Re: Adoption of Minn. Reg. WPC 40 Setting Forth Individual Sewage Treatment System Standards

Dear Mike:

In accordance with today's telephone request, I am enclosing for your use, two copies of the Statement of Evidence, two copies of the Report of Chief Hearing Examiner, and one copy of the Rules as Adopted.

In addition after reflecting on your comments with respect to the order adopting rules, I am preparing a new order adopting rules which will consist of only two or three pages as you suggest. On further reflection, I agree fully with you that the Order should appear in that form, and I also believe that there should be no problem in obtaining an execution of that abbreviated order by my client. As soon as I have been able to obtain the signatures of the Chairman of the Board and the Executive Director of the Agency, I will forward to you the original and copies of the Order Adopting Rules.

Thank you for your cooperation in this matter.

Very truly yours,

John-Mark Stensvaag

John-Mark Stensvaag
Special Assistant
Attorney General

JMS:ms

Enclosures

STATE OF MINNESOTA

OFFICE OF THE ATTORNEY GENERAL

Address Reply To:
OFFICE OF ATTORNEY GENERAL
MINNESOTA POLLUTION CONTROL AGENCY
1935 W. County Road B2
Roseville, Minnesota 55113
612/296-7342

May 23, 1978

RECEIVED

ATTORNEY GENERAL
ADMINISTRATIVE AGENCIES

Michael B. Miller, Esq.
Department of Administration
G19-K Administration Building
50 Sherburne Avenue
St. Paul, Minnesota 55155

RE: Adoption of Minn. Reg. WPC 40 Setting Forth Individual Sewage Treatment Systems Standards

Dear Mr. Miller:

On May 8, 1978, when I transmitted the above-captioned rule to you for your review, I indicated that the final document setting forth the integrated rule as adopted was still being prepared and would subsequently be sent to you. We have now completed the typing of the rule in its final form, and I am enclosing two copies for your use.

Thank you for your cooperation in this matter.

Very truly yours,

John-Mark Stensvaag

John-Mark Stensvaag
Special Assistant
Attorney General

JMS:ms

Enclosures

RECEIVED
MAY 24 1978
ATTORNEY GENERAL
ADMINISTRATIVE AGENCIES

5/24/78

STATE OF MINNESOTA

OFFICE OF THE ATTORNEY GENERAL

Address Reply To:
OFFICE OF ATTORNEY GENERAL
MINNESOTA POLLUTION CONTROL AGENCY
1935 W. County Road B2
Roseville, Minnesota 55113
612/296-7342

May 8, 1978

Michael B. Miller, Esq.
Department of Administration
G19-K Administration Building
50 Sherburne Avenue
St. Paul, Minnnesota 55155

Re: Adoption of Minn. Reg. WPC 40 Setting Forth Individual Sewage Treatment Systems Standards

Dear Mr. Miller:

On May 4, 1978, the Chief Hearing Examiner issued his report concluding that the above-captioned rules, as finally proposed, do not differ substantially from the rules as originally proposed by the Minnesota Pollution Control Agency. In accordance with Minn. Stat. §15.0412 subd. 4 (1977 Supp.), enclosed for your review are copies of the hearing documents in this matter.

In accordance with our telephone conversation of May 5, 1978, I am enclosing copies, rather than originals, of all documents, with the exception of the Order Adopting Rules. I understand that the original of that particular pleading must be filed by you with the Secretary of State and am therefore enclosing the original herewith.

We also discussed the problem of the fact that there is not yet one single document containing the rule as finally adopted, because of the great length of the rule and because of the numerous minor changes which have taken place since it was originally proposed. I understand that, for purposes of your review, it is sufficient that you have copies of the Order Adopting Rules and of the rule as originally proposed which, when read together, disclose the text of the final rule. Accordingly, I have sent five copies of each of those documents. However, I also understand that the Secretary of State's Office still insists on the filing of a single document containing the final rule. Therefore, we are beginning the process of retyping the final

rule and will transmit it to you when it is completed.

If there is anything which I have omitted, please give me a call. Thank you for your coooperation in this matter.

Very truly yours,

John-Mark Stensvaag

John-Mark Stensvaag
Special Assistant
Attorney General

JMS:ms

Enclosures

PCA-78-004-WS

STATE OF MINNESOTA
OFFICE OF HEARING EXAMINERS

FOR THE MINNESOTA POLLUTION CONTROL AGENCY

IN THE MATTER OF THE PROPOSED)
ADOPTION OF MINNESOTA REGULATION)
WPC 40 SETTING FORTH INDIVIDUAL)
SEWAGE TREATMENT SYSTEM STANDARDS)

REPORT OF THE
CHIEF HEARING EXAMINER

WHEREAS, hearings were held on November 7, 10, 14, 15, 16, 17 and 21, 1978, before William Seltzer, a Hearing Examiner of the State Office of Hearing Examiners, on the above-entitled matter in compliance with Minn. Stat. § 15.0412, Subd. 4; and

WHEREAS, the Report of Hearing Examiner made pursuant to Minn. Stat. § 15.052, Subd. 3, was issued to the Pollution Control Agency on March 24, 1978; and

WHEREAS, the Pollution Control Agency has now determined to adopt rules pursuant to Minn. Stat. § 15.0412, Subd. 4; and

WHEREAS, the Pollution Control Agency has submitted said rules to the Chief Hearing Examiner for review pursuant to Minn. Stat. § 15.052, Subd. 4, and Rule HE 107; and

WHEREAS, the Chief Hearing Examiner finds that the final proposed rules are not substantially different from those proposed at the public hearings and that the Pollution Control Agency has met all requirements of Minn. Stat. § 15.0412, Subd. 4.

NOW, THEREFORE, upon receipt of this Report, the Pollution Control Agency has the responsibility of submitting the complete hearing record and the rules as adopted by the Agency to the Attorney General and to publish in the State Register, all pursuant to Minn. Stat. § 15.0412, Subd. 4.

Dated this 4th day
of May, 1978.

Duane R. Harves

DUANE R. HARVES
Chief Hearing Examiner

PCA-78-004-WS

STATE OF MINNESOTA
OFFICE OF HEARING EXAMINERS

FOR THE MINNESOTA POLLUTION CONTROL AGENCY

IN THE MATTER OF THE PROPOSED)
ADOPTION OF MINNESOTA REGULATION)
WPC 40 SETTING FORTH INDIVIDUAL)
SEWAGE TREATMENT SYSTEM STANDARDS)

REPORT OF THE
CHIEF HEARING EXAMINER

WHEREAS, hearings were held on November 7, 10, 14, 15, 16, 17 and 21, 1978, before William Seltzer, a Hearing Examiner of the State Office of Hearing Examiners, on the above-entitled matter in compliance with Minn. Stat. § 15.0412, Subd. 4; and

WHEREAS, the Report of Hearing Examiner made pursuant to Minn. Stat. § 15.052, Subd. 3, was issued to the Pollution Control Agency on March 24, 1978; and

WHEREAS, the Pollution Control Agency has now determined to adopt rules pursuant to Minn. Stat. § 15.0412, Subd. 4; and

WHEREAS, the Pollution Control Agency has submitted said rules to the Chief Hearing Examiner for review pursuant to Minn. Stat. § 15.052, Subd. 4, and Rule HE 107; and

WHEREAS, the Chief Hearing Examiner finds that the final proposed rules are not substantially different from those proposed at the public hearings and that the Pollution Control Agency has met all requirements of Minn. Stat. § 15.0412, Subd. 4.

NOW, THEREFORE, upon receipt of this Report, the Pollution Control Agency has the responsibility of submitting the complete hearing record and the rules as adopted by the Agency to the Attorney General and to publish in the State Register, all pursuant to Minn. Stat. § 15.0412, Subd. 4.

Dated this 4th day
of May, 1978.

Duane R. Harves

DUANE R. HARVES
Chief Hearing Examiner

CERTIFICATE OF BOARD'S
AUTHORIZING RESOLUTION

I, Sandra S. Gardebring, do certify that I am the Executive Director of the Minnesota Pollution Control Agency, an Agency duly authorized under the laws of the State of Minnesota, and that a resolution was adopted at the meeting of the Agency properly called on the 6th day of September, 1977; that a quorum was present at said meeting; that the resolution has not been rescinded or modified; and that the resolution provided:

> BE IT RESOLVED that the Board authorizes public hearings on WPC 40: Individual Sewage Treatment Systems Standards to be held in the fall of 1977 at Roseville, Marshall, Brainerd, Virginia, Bemidji, Fergus Falls, and Rochester, Minnesota, and further authorizes the Executive Director to sign an Order for Hearing commencing such proceedings.

IN WITNESS WHEREOF, I have hereunto subscribed my name this 6th day of September, 1977.

Sandra S. Gardebring
Sandra S. Gardebring
Executive Director

Subscribed and sworn to
before me this 6th day
of September, 1977:

Lila Holmdahl
Notary Public

LILA HOLMDAHL
NOTARY PUBLIC - MINNESOTA
HENNEPIN COUNTY
My Commission Expires Nov. 1, 1983

STATE OF MINNESOTA

COUNTY OF RAMSEY

MINNESOTA POLLUTION

CONTROL AGENCY

In the Matter of the Proposed
Adoption of Minn. Reg. WPC 40
Setting Forth Individual
Sewage Treatment Systems
Standards

ORDER FOR HEARING

IT IS HEREBY ORDERED THAT public hearings on the above-captioned rule be held in the Board Room of the Minnesota Pollution Control Agency, 1935 West County Road B2, Roseville, Minnesota, on November 7, 1977, commencing at 9:00 a.m.; in Room 158 of the Student Center, Southwest State University, North Highway 23, Marshall, Minnesota, on November 10, 1977, commencing at 7:00 p.m.; in the Crow Wing County Service Building, Brainerd, Minnesota, on November 14, 1977, commencing at 7:00 p.m.; in Room 176 of the Messabi Community College, 9th Avenue & West Chestnut, Virginia, Minnesota, on November 15, 1977, commencing at 7:00 p.m.; in the Beaux Arts Ballroom of Bemidji State University, 14th Street & Birchmont Drive, Bemidji, Minnesota, on November 16, 1977, commencing at 7:00 p.m.; in Room S-209 of the Fergus Falls Community College, Highway 210 West, Fergus Falls, Minnesota, on November 17, 1977, commencing at 7:00 p.m.; and in the Theater at Rochester Community College, East Highway 14, Rochester, Minnesota, on November 21, 1977, commencing at 7:00 p.m. These hearings shall continue until all persons have had an opportunity to be heard.

IT IS FURTHER ORDERED that a Notice of Hearing be mailed to all persons or representatives of associations or other interested groups who have registered their names with the Secretary of State for that purpose.

IT IS FURTHER ORDERED that the Notice of Hearing be published in the State Register.

Sandra S. Gardebring

Sandra S. Gardebring
Executive Director

Dated: September 6, 1977

STATE OF MINNESOTA

COUNTY OF RAMSEY

MINNESOTA POLLUTION

CONTROL AGENCY

In the Matter of the Proposed
Adoption of Minn. Reg. WPC 40
Setting Forth Individual
Sewage Treatment Systems
Standards

NOTICE OF HEARING

NOTICE IS HEREBY GIVEN that public hearings in the above-entitled matter will be held in the Board Room of the Minnesota Pollution Control Agency, 1935 West County Road B2, Roseville, Minnesota, on November 7, 1977, commencing at 9:00 a.m.; in Room 158 of the Student Center, Southwest State University, North Highway 23, Marshall, Minnesota, on November 10, 1977, commencing at 7:00 p.m.; in the Crow Wing County Service Building, Brainerd, Minnesota, on November 14, 1977, commencing at 7:00 p.m.; in Room 176 of the Messabi Community College, 9th Avenue & West Chestnut, Virginia, Minnesota, on November 15, 1977, commencing at 7:00 p.m.; in the Beaux Arts Ballroom of Bemidji State University, 14th Street & Birchmont Drive, Bemidji, Minnesota, on November 16, 1977, commencing at 7:00 p.m.; in Room S-209 of the Fergus Falls Community College, Highway 210 West, Fergus Falls, Minnesota, on November 17, 1977, commencing at 7:00 p.m.; and in the Theater at Rochester Community College, East Highway 14, Rochester, Minnesota, on November 21, 1977, commencing at 7:00 p.m. These hearings shall continue until all persons have had an opportunity to be heard. The Agency will present its witnesses and evidence in support of the above captioned rule at the hearing in Roseville, Minnesota.

All interested or affected persons will have an opportunity to participate. Statements may be made orally and written materials may be submitted at the hearing. In addition, written materials may be submitted by mail to Hearing Examiner William Seltzer, 1745 University Avenue, St. Paul, Minnesota 55104 phone (612) 296-8105, either before the hearing or within five working days after the close of the hearing, unless the Hearing Examiner orders the record to remain open for a longer period not to exceed 20 days, in which case written comments may be submitted within that period. For those wishing to submit written materials, it is requested that at least three (3) copies of such material be furnished. In addition, to save time and to avoid duplication, it is suggested that those persons, organizations, or associations having a common viewpoint or interest in these proceedings join together where possible and present a single statement in behalf of such interests.

The proposed rules, if adopted, would:

(1) Provide minimum standards and criteria for the design, location, installation, use and maintenance of individual sewage treatment systems, which would be applied in the following manner:

(a) The following systems would be required to conform to the requirements of the standards and to make application for a State Disposal System Permit from the Agency:

(i) Individual sewage treatment systems which serve a single facility generating greater than 15,000 gallons per day; and

(ii) Collector systems which serve 15 dwellings or 5,000 gallons per day, whichever is less;

(b) Individual sewage treatment systems serving establishments or facilities licensed or otherwise regulated by the State of Minnesota would be required to conform to the requirements of the standards;

(c) The standards would be administered by local units of government in Shoreland and Floodplain Areas and Wild and Scenic River Land Use Districts pursuant to Minnesota Statutes §§ 104.04, 104.36 and 105.485 (1976) and regulations of the Minnesota Department of Natural Resources promulgated under those statutes;

(d) Outside of the above-mentioned areas, the standards would serve as recommended guidelines for the adoption of local ordinances and for the design, location, construction, use and maintenance of individual sewage treatment systems;

(2) Create an Advisory Committee on Individual Sewage Treatment Systems for the purpose of reviewing technical data and possible revised standards and legislation, developing and revising a technical manual and educational materials and programs, and advising the Agency and local units of government on the administration of standards and ordinances pertaining to individual sewage treatment systems.

Copies of the proposed rule are now available and one free copy may be obtained by writing to Mr. Michael J. Hansel, Minnesota Pollution Control Agency, Division of Water Quality, 1935 West County Road B2, Roseville, Minnesota 55113.

Additional copies will be available at the door on the dates of the hearings. The Agency's authority to promulgate the proposed rule is contained in Minnesota Statutes Chapters 104, 105, 115 and 116 and, more specifically, Minnesota Statutes § 115.03 subd. 1(e) (1976). A "statement of need" explaining why the Agency feels the proposed rules are necessary and a "statement of evidence" outlining the testimony which the Agency will be introducing will be filed with the Hearing Examiner's Office at least 25 days prior to the hearing and will be available for public inspection.

Please be advised that Minnesota Statutes, Chapter 10A, requires each lobbyist to register with the Ethical Practices Board within five days after he commences lobbying. Lobbying includes attempting to influence rulemaking by communicating or urging others to communicate with public officials. A lobbyist is generally any individual who spends more than $250 per year for lobbying or any individual who is engaged for pay or authorized to spend money by another individual or association and who spends more than $250 per year or five hours per month at lobbying. The statute provides certain exceptions. Questions should be directed to the Ethical Practices Board, 41 State Office Building, St. Paul, Minnesota 55155, phone (612) 296-5615.

Sandra S. Gardebring

Sandra S. Gardebring
Executive Director

Dated: September 6, 1977

STATE OF MINNESOTA

COUNTY OF RAMSEY

MINNESOTA POLLUTION

CONTROL AGENCY

In the Matter of the Proposed Adoption of Minn. Reg. WPC 40 Setting Forth Individual Sewage Treatment Systems Standards

NO. PCA-78-004-WS

AFFIDAVIT OF RECEIPT OF SECRETARY OF STATE'S LIST

STATE OF MINNESOTA)
) ss.
COUNTY OF RAMSEY)

Michael J. Hansel, being duly sworn on oath deposes and says:

1. That he is an employee of the Water Quality Division, Minnesota Pollution Control Agency, of the State of Minnesota.

2. That on the 26th day of September, 1977, he went to the Secretary of State's office for the State of Minnesota and requested a current list of all representatives of associations or other interested groups or persons who had registered their names with the Secretary of State for the purpose of obtaining notices of public hearings relating to the promulgation of rules pursuant to Minn. Stat. §15.0412.

3. That on the 27th day of September, 1977, in response to the above request, the Secretary of State provided him with such a list, a copy of which is attached hereto and incorporated

by reference.

FURTHER AFFIANT SAYETH NOT.

Michael J. Hansel

Subscribed and sworn to before me
this 29th day of September, 1977:

MARY E. WYATT
NOTARY PUBLIC-MINNESOTA
RAMSEY COUNTY
My Comm. Expires Oct. 24, 1983

Mary E. Wyatt
Notary Public

STATE OF MINNESOTA

COUNTY OF RAMSEY

MINNESOTA POLLUTION

CONTROL AGENCY

In the Matter of the Proposed Adoption of Minn. Reg. WPC 40 Setting Forth Individual Sewage Treatment Systems Standards

NO. PCA-78-004-WS

CERTIFICATE OF DELIVERY
SECRETARY OF STATE LIST

I hereby certify that the attached 491 labels and 13 sheets constitute the complete list of persons, associations, and other interested groups who as of 8:45 o'clock AM, this 29th day of September, 1977, have requested pursuant to Minn. Stat. §15.0412 subd. 4 (1976) that their names be placed on file with the Secretary of State for the purpose of receiving notice of public hearing on proposed rules on the subject captioned above.

SECRETARY OF STATE

JOAN ANDERSON GROWE

Joan Anderson Growe

By Clare L. Mattson

STATE OF MINNESOTA

COUNTY OF RAMSEY

MINNESOTA POLLUTION

CONTROL AGENCY

In the Matter of the Proposed Adoption of Minn. Reg. WPC 40 Setting Forth Individual Sewage Treatment Systems Standards

NO. PCA-78-004-WS

AFFIDAVIT OF MAILING

STATE OF MINNESOTA)
) ss.
COUNTY OF RAMSEY)

John Jones, being first duly sworn, deposes and says:

That on the 3rd, 4th, and 5th days of October, 1977, at the City of Roseville, County of Ramsey, State of Minnesota, he served the attached Notice of Hearing in the above-entitled matter by depositing in the United States mail at said City of Roseville, a true and correct copy thereof, properly enveloped, with postage prepaid, and addressed to those named on the attached Mailing List.

John Jones

Subscribed and sworn to before me
this 6th day of October, 1977:

MARY E. WYATT
NOTARY PUBLIC-MINNESOTA
RAMSEY COUNTY
My Comm. Exp. Oct. 31, 1983

Mary E Wyatt
Notary Public

STATE OF MINNESOTA

COUNTY OF RAMSEY

MINNESOTA POLLUTION

CONTROL AGENCY

In the Matter of the Proposed Adoption of Minn. Reg. WPC 40 Setting Forth Individual Sewage Treatment System Standards

NO. PCA-78-004-WS

STATEMENT OF NEED

INTRODUCTION

The above-captioned rule is not an amendment to any existing rules of the Minnesota Pollution Control Agency (hereinafter "Agency"). It is being promulgated pursuant to Minn. Stat. §115.03 subd. 1(e) (1976), which authorizes the Agency to adopt reasonable standards and regulations in order to prevent, control, or abate water pollution. Minn. Stat. §115.01 subd. 5 (1976) defines "water pollution" in a manner which includes adverse effects from the discharge to surface and ground waters of inadequately treated sewage.

Proposed Minn. Reg. WPC 40 augments the Agency's current regulation relating specifically to groundwater, Minn. Reg. WPC 22 (1973), which sets the general standards for underground waters. WPC 22 does not directly govern the use of septic tank systems, but anticipates future Agency rules which might apply to the construction, location, maintenance, or use of individual sewage treatment systems. See Minn. Reg. WPC 22(d)(5).

The need for proposed WPC 40 arises from four sources: (1) the large number and widespread use of individual sewage treatment systems which have the potential to pollute ground and surface waters; (2) the inadequacy of existing standards in light of increased knowledge and understanding of the function of individual systems and increased development of new devices and techniques; (3) the requirements of the Shorelands Management Act, Minn. Stat. §105.485 (1976), the Minnesota Wild and Scenic Rivers Act, Minn. Stat. §104.31 et seq. (1976), and the Flood Plain Management Act, Minn. Stat. §104.01 et seq. (1976), all as administered by the Minnesota Department of Natural Resources (hereinafter "DNR"); and (4) the need of small communities to have alternative treatment systems available to economically treat their wastes and to qualify for federal and state construction grant monies. Each of these sources will be discussed in turn.

1. The Large Number and Widespread Use of Individual Sewage Treatment Systems Which Have the Potential to Pollute Ground and Surface Waters

According to several estimates, there are between 250,000 and 300,000 individual sewage treatment systems in Minnesota and 10,000 to 15,000 new systems are installed annually. This compares to approximately 2,000 sources which discharge to surface waters and several hundred which discharge to the land surface. Approximately one-third of the State's population is served by individual systems. Although the contribution of a single individual system may seem insignificant compared to the volume of some of the larger surface dischargers, the cumulative

total of waste treated by individual systems approaches 50 million gallons per day.

Individual sewage treatment systems have a major impact on surface and groundwaters when they are improperly designed, constructed, located, operated or maintained. There are reported incidences of contaminated well water, of sewage bubbling up in yards and streets, and of sewage going directly into lakes and streams as a result of defective septic systems. These are only the most dramatic occurrences and other adverse impacts remain unreported. Because the groundwaters are the primary source of untreated drinking water, groundwater pollution endangers the public health. Pollution of lakes by defective septic systems may result in undesirable eutrophication and health hazards due to contact recreation.

Because of the extremely large number of systems in the State and because of the practical difficulty of attempting to monitor the quality of discharges beneath the soil, the regulation of individual sewage treatment systems cannot be effectively accomplished through the use of traditional effluent limitations or water quality standards. Instead, construction standards are necessary to assure adequate treatment at a reasonable cost and to assure the public authority and the consumer alike that adequate systems are being installed.

2. The Inadequacy of Existing Standards

The current State standard for individual sewage treatment systems is a recommended code from the Minnesota Department of Health (hereinafter "MDH") entitled "Minnesota Sewage Disposal

Code," published in 1971. This code was based primarily on a 1967 publication of the U.S. Department of Health, Education and Welfare and the U.S. Public Health Service entitled "Manual of Septic Tank Practice." Since the publication of these documents, there has been a virtual explosion in the amount of research and study devoted to individual systems. Leading centers for these studies include the University of Wisconsin's Small Scale Waste Management Project, which is devoted entirely to work on individual systems, the University of California at Berkeley, the University of Connecticut, and the University of Minnesota. The result has been a many-fold increase in the understanding of how an individual system works, why it fails, and how to improve its efficiency.

Similarly, during the same time period, quite a number of new devices and techniques began to be developed and marketed. These devices and techniques were designed to improve onsite sewage treatment, particularly under marginal and poor soil and site conditions. Much of the soil in Minnesota is not suitable for the traditional septic tank system, due to slow permeability, high water table, location of bedrock, and other causes. Although the recommended Code of the MDH provides rather complete coverage where soils are adequate, the Code does not really address the problem of constructing, repairing, or replacing systems in marginal soils.

Because the Shorelands Management Act, Minn. Stat. §105.485 (1976), requires existing non-conforming systems to be upgraded, the Agency has been asked repeatedly by homeowners and local

administrators to provide some guidance on what to do in those areas where a traditional septic tank/drainfield will not work. The proposed regulation attempts to provide such guidance by providing standards for a number of alternative systems which can be used where site or soil conditions are such that the traditional system will not function properly. Included are designs for soils which are too coarse or too tight, soils with high groundwater or bedrock, and soils which lie in floodplain areas. In addition, the proposed regulation would allow the use of mounds, alternative toilet and "greywater" systems, aerobic tanks, and "collector" systems (where more than one home or building is connected to a common drainfield). These systems will be particularly useful in shoreland areas where existing systems on small lots with inadequate soils need to be upgraded and in small rural communities where a centralized municipal plant is not feasible.

3. Requirements of Minnesota Statutes, as Administered by the DNR

In 1971, the DNR promulgated in Shoreland Management Regulations, Minn. Reg. Cons 70 through 77, its program for unincorporated areas, pursuant to Minn. Stat. §105.485 (1976). In following years, additional regulations were promulgated to include incorporated shorelands, floodplains, and wild and scenic river land use districts. See Minn. Reg. NR 78 through 93. These regulations, particularly Minn. Reg. Cons 72(b)(2) and Minn. Reg. NR 83(d)(2)(bb), require that sewage systems be installed in

accordance with all applicable standards, criteria, rules and regulations of the MDH and this Agency. Thus, as early as 1971, it was anticipated that this Agency would adopt regulations governing individual systems.

More importantly, however, the Shoreland and other relevant DNR regulations require that existing non-conforming systems be upgraded within five years after local adoption of certain mandatory ordinances. In many unincorporated areas, that deadline has passed and non-conforming, polluting systems remain uncorrected. In other instances, property owners have been forced to install and operate holding tanks, the most expensive method of disposing of wastes, because their lots are too small or the soil conditions are inadequate to accommodate the traditional on-site treatment system recommended in the MDH standards: the septic tank and drainfield. This experience underscores the need for alternative systems which can be used on small lots and under marginal soil conditions.

4. The Needs of Small Communities

The Agency, pursuant to §201 of the Federal Water Pollution Control Act Amendments of 1972, Minn. Stat. Chapter 115 (1976), and Minn. Reg. WPC 34, administers a program of grants to help communities construct wastewater treatment plants. In the past, the greatest share of the money has gone to the larger, sewered municipalities, because their discharges have had a potentially larger effect on the waters of the state. However, the Agency is now beginning to receive requests from smaller communities, especially unsewered communities, for grant participation. These communities

have a definite need for improved wastewater treatment and perhaps even more of a need for financial assistance, given their generally smaller tax base and the lower average income of their residents.

However, a number of these communities have discovered that they are not able to afford even the local share required to construct a centralized municipal plant. Other communities have discovered that, even if they can afford to build, they cannot afford to properly operate and maintain a centralized municipal plant. The problem is particularly severe in those unsewered communities which would have to install collection systems to bring the waste to the central plant. Such collection systems frequently cost one-half to two-thirds of the total cost of the project and have generally not been eligible for grants.

The U.S. Environmental Protection Agency (EPA) recently began requiring that non-centralized, onsite, or cluster (collector) systems be investigated when unsewered communities participate in the construction grants program. See EPA Program Guidance Memorandum (PRM) 77-8 (July, 1977). There is a need to have clear standards for the design, construction, and location of such on-site or cluster systems, so that small communities can confidently construct and operate affordable treatment systems and participate in the construction grants program.

CONCLUSION

Individual sewage treatment systems in Minnesota are numerous and widespread. Systems which are improperly designed, constructed, located, operated, or maintained can result in contaminated wells, eutrophication of surface waters, and other public health problems. Existing standards for the design, construction, location, operation, and maintenance of such systems are inadequate and incomplete in light of recent research and innovations. Existing state regulations require upgrading of individual systems under conditions where the traditional septic tank and drainfield cannot function. Small, rural, unsewered communities cannot afford conventional centralized sewage treatment systems and are being required to investigate onsite and neighborhood systems. Consequently, there is a need to adopt regulations which provide standards for the design, construction, location, use, and maintenance of both the traditional septic tank/soil treatment system and alternatives in Minnesota.

MINNESOTA POLLUTION CONTROL AGENCY

Sandra S. Gardebring

Sandra S. Gardebring
Executive Director

Dated: October 6, 1977

STATE OF MINNESOTA

COUNTY OF RAMSEY

MINNESOTA POLLUTION

CONTROL AGENCY

In the Matter of the Proposed Adoption of Minn. Reg. WPC 40 Setting Forth Individual Sewage Treatment Systems Standards

NO. PCA-78-004-WS

FINDINGS OF FACT AND CONCLUSIONS

The above-entitled matter came on for decision before the Minnesota Pollution Control Agency on the 25th day of April, 1978. After affording interested persons an opportunity to present written and oral data, statements, and arguments to Hearing Examiner William Seltzer, after considering the Report of the Hearing Examiner, and after considering all of the evidence adduced upon the records, files and proceedings herein, the Agency, being fully advised in the premises, hereby accepts and adopts the Findings of Fact and Conclusions of the Hearing Examiner, as contained in his Report attached hereto, and incorporates them herein by reference, with the following amendments:

1. Finding No. 22 shall be amended to read as follows:

   A number of individuals and the Association of On-Site Sewage Contractors have challenged the reasonableness of the setbacks provided in Table IV for locating a drainfield in relation to the ordinary high water mark of lakes and rivers and in relation to shallow unprotected water supply wells which are less than fifty feet deep and which do not encounter at least ten feet of impervious material. Table IV is set forth following WPC 40(H)(2)(d)(3).

   The Agency finds that the setbacks from the ordinary high water mark of lakes and rivers, as

originally set forth in Table IV, are reasonable because the setbacks are necessary to protect lakes and streams from contamination and pollution from the sewage tank effluent and because the setbacks as originally proposed are identical to existing law established by regulations of the Minnesota Department of Natural Resources. For the reasons set forth in Finding 23, infra, the Agency rejects the Hearing Examiner's recommendation that the Agency consider in a reconvened hearing the possibility of authorizing the location of drainfields in conflict with existing law of Minnesota as contained in regulations of the Minnesota Department of Natural Resources.

The Agency further finds that the 100-foot setback provision originally proposed in Table IV for locating a drainfield in relation to a shallow unprotected well is reasonable because:

(a) The sole purpose of this setback provision is to protect the health of individuals who use such wells, and the agency primarily responsible for protection of the public health (the Minnesota Department of Health) has made the 100-foot setback requirement the law of Minnesota, pursuant to Minn. Reg. MHD 217;

(b) Evidence in the record of the present proceeding indicates that disease-causing

nitrates may travel as far as 100 feet in concentrations high enough to pose a health hazard;

(c) Annual testing of wells is not a viable alternative because of the difficulty of enforcing such a testing requirement and because, as the Hearing Examiner found, the requirement would impose the burden of testing on adjoining property owners in many instances;

(d) Several other states require separation distances of 100 feet or more;

(e) The Citizens' Advisory Committee, composed of 45 members knowledgeable in all aspects of individual sewage treatment systems, originally determined after much deliberation that the 100-foot setback should be included, and the collective judgment of that group of individuals is entitled to great weight.

For the reasons set forth in Finding 23, infra, the Agency rejects the Hearing Examiner's recommendation that the Agency consider in a reconvened hearing the possibility of authorizing the location of drainfields in conflict with existing Minnesota law as contained in regulations of the Minnesota Department of Health.

Nevertheless, the 100-foot setback distance from shallow unprotected wells may result in certain hardships. It is

likely, as the Hearing Examiner found, that there are currently hundreds of sewage treatment systems with no more than a 50-foot separation from such wells which are safe and economically practical for hundreds of lakeshore lots. Many such sites have been occupied for 25 years or more. Additionally, the Minnesota Department of Natural Resources, in 1973, required counties with lake or stream shorelands to adopt a Shoreland Management Program complying with certain requirements, including a 50-foot shallow well separation distance, as then recommended by the Minnesota Department of Health Code. See Finding 12, supra. To this date, those original regulations of the Department of Natural Resources are being administered, unaltered, by the Ottertail County "Land and Resources Management" office and by other counties, notwithstanding the fact that there is currently a conflict between these incorporated requirements of the Minnesota Department of Natural Resources and the Minnesota Department of Health's Water Well Construction Code (Minn. Reg. MHD 217). This conflict is unfortunate, but the Agency does not wish to add to it by reconvening the hearing for the purpose of considering yet another setback distance.

There is sufficient evidence in the record to conclude that the 100-foot setback requirement is likely to cause increased economic burden because of added installation costs and also likely to present additional technical burdens in instances where it may be impossible or

difficult to find enough space for the required setback. In many instances, it will be possible to solve the problem by drilling a deeper well, but this will not always be the case. The Hearing Examiner found, and the Agency also finds, that such economic or technical burdens may well be justified if the benefit derived results in a corresponding benefit to human health and the environment. The Minnesota Department of Health has found that there is such a corresponding benefit to human health. Where such benefit would demonstrably not result and where compliance with the 100-foot setback requirement would pose a hardship, WPC 40(K) provides and local ordinances may provide a variance mechanism subject to any additional variance requirements of the Minnesota Department of Health. In light of the potential hardships, the Minnesota Department of Health may wish to re-examine the availability of variances from the 100-foot setback requirement in specific instances.

2. Finding No. 23 shall be amended to read as follows:

For the reasons set forth in Finding 22, supra, the Citizens' Advisory Committee and the Agency Staff recommended to the Hearing Examiner at the close of the proceedings a revised Table IV which would assure that none of the disputed setback provisions would be "chiseled in stone" by receiving the independent imprimatur of this Agency. The Citizens' Advisory Committee and the Agency Staff proposed the following alternative language for Table IV:

TABLE IV
Minimum Setback Distances (feet)

Feature	Sewage Tank	Soil Treatment Area
Water Supply well less than 50 feet deep and not encountering at least ten feet of impervious material	~~50~~*	~~100~~*
Any other water supply well or buried water suction pipe	~~50~~*	~~50~~*
Buried pipe distributing water under pressure	~~10~~*	~~10~~*
Buildings	10	20
Property Lines	10	10
The Ordinary High Water Mark of:		
Natural Environment Lakes and Rivers	~~150~~**	~~150~~**
Recreational Development Lakes and Streams	~~75~~**	~~75~~**
General Development Lakes and Streams	~~50~~**	~~50~~**
Wild Rivers	~~150~~**	~~150~~**
Scenic Rivers	~~100~~**	~~100~~**
Recreational Rivers and Designated Tributaries of Wild Scenic, and Recreational Rivers	~~75~~**	~~75~~**

* Setbacks from water supply wells and buried water pipes are presently governed by Minn. Reg. MHD 217(c)(1)(dd), (ee) and (ff). These regulations, as of the date of enactment of this rule, are reproduced in Appendix D.

** Setbacks from lakes, rivers and streams are presently governed by Minn. Reg. Cons. 72(b)(4), NR 79(d)(2) and NR 83(d)(2)(dd). These regulations, as of the date of enactment of this rule, are reproduced in Appendix E.

The Hearing Examiner recommended that the issues concerning the setback distances in Table IV should be set

for rehearing by the Board of this Agency. The Agency expressly rejects that recommendation because such reconvened hearings would be futile. The alternative version of Table IV proposed by the Citizens' Advisory Committee and the Agency Staff is reasonable and preferrable to the Hearing Examiner's rehearing recommendation because:

(a) The proposed version of Table IV is consistent, as it should be, with existing law;

(b) Primary responsibility for the disputed setbacks---particularly the shallow well setback---rests with the agencies which have promulgated the existing law and existing law cannot be changed unless those agencies convene hearings on the issue;

(c) A hearing would be futile because the Agency does not believe that it would be reasonable for it to authorize in its regulations setbacks which would be in conflict with existing law;

(d) The futility of a reconvened hearing would not be overcome by urging the Department of Natural Resources and the Health Department to participate fully and completely, because both agencies did, in fact, participate fully in drafting proposed WPC 40 and did, in fact, testify before the Hearing Examiner in these proceedings;

(e) A regulation which defers to the Department of Natural Resources and the Health Department on

these disputed setback provisions assures maximum flexibility for the future while providing adequate warning to those who consult Table IV, and is as reasonable in this respect as the deference employed in amended WPC 40(E) as recommended by the Hearing Examiner in Finding 28, infra;

(f) Individuals who consider themselves aggrieved by any setback provision in the revised Table IV may seek a change in such a setback provision by attempting to obtain the amendment of only one regulation (that of the Health Department or the Department of Natural Resources), rather than two regulations;

(g) In making alternative Recommendation No. 29 (that the Agency Staff's suggested revision of Table IV be adopted in the event that the Agency rejects the recommendation of a reconvened hearing), the Hearing Examiner made an implicit finding that the revised Table IV as proposed by the Agency Staff is reasonable.

3. Finding No. 25 shall be amended to read as follows:

WPC 40(D)(2) provides that a preliminary evaluation of publicly available existing data shall be made prior to design of the treatment system and further provides that, if such information is adequate, in the opinion of the permitting authority, to demonstrate that the site is

suitable, approval may be given for installation of a standard system without the need for any further field testing. This flexible approach to system design may save homeowners and others substantial costs by eliminating the need for expensive on-site tests which merely yield results which are fully predictable based on publicly available existing data. The Hearing Examiner found that this provision gave an "unreasonable amount of discretion" to permitting authorities.

The Agency expressly finds that WPC 40(D)(2) does not give an unreasonable amount of discretion to permitting authorities and is in all respects reasonable, and the Agency rejects the Hearing Examiner's recommendation that specific criteria be added. It is neither wise nor necessary to burden an already lengthy regulation with examples of what is meant by "publicly available existing data". Such data may take many forms. For example, some counties have soils maps which describe in detail the depth to groundwater and bedrock, soil types, conditions and permeabilities, slopes, existence of lowlands, rock outcrops and surface flooding probabilities. USGS topographic maps are also generally available to indicate slope. In some counties, floodplain maps are available. In addition, the adjoining properties may have been specifically evaluated in the near past and, if soils are homogeneous enough, information derived from neighboring properties may be sufficient to design and locate a system on a particular lot. The experience of the local administrator can also be a source of information.

In some areas of the state, soil conditions are homogeneous for miles. If the soils are homogeneous, the local administrator may know enough of the area to allow the design of the system without costly on-site field testing. In other areas of the state, however, soils can change within 30 feet and in these areas it will be necessary to do a field evaluation as well as gather preliminary information.

The Citizens' Advisory Committee carefully examined the problem of using pre-existing data to avoid costly on-site field investigations and endorsed the approach of WPC 40(D)(2). As previously noted, that Committee's judgment is entitled to great weight. The Agency finds that the discretion afforded in WPC 40(D)(2) to the permitting authorities will result in substantial savings to those who install individual sewage treatment systems, and that those substantial savings cannot be achieved without according such discretion to the permitting authorities.

4. Finding No. 26 shall be amended to read as follows:

WPC 40(D)(3) specifies the procedures for soil borings and percolation tests. The Hearing Examiner found that provision to contain unreasonable ambiguity because it does not specify those instances in which soil borings and percolation tests are required and does not clearly specify <u>where</u> soil borings and percolation tests should be taken.

The Agency expressly finds that WPC 40(D)(3) is reasonable in all respects and cannot be made more definite as suggested by the Hearing Examiner without imposing additional

needless cost on the design of the treatment system. WPC 40(D)(3) does not specify when soil borings and percolation tests are needed because the permitting authority is to make such a determination pursuant to WPC 40(D)(2). See Finding 25, supra. WPC 40(D)(3) does not specify the location of soil borings and percolation tests or the number of such tests to be run, because the reasons for performing a field evaluation may vary greatly. For example, if there is a soils map, the field evaluation may only be needed to verify the information on the soils map. If no soils map or other information is available, the field evaluation may need to be much more extensive, requiring many more soil borings and percolation tests. The number of tests and the locations of such tests depend entirely on the information uncovered during the preliminary evaluation. Only the requirements for the tests themselves are set forth in WPC 40(D)(3) because it is not possible to codify the many factors which must be considered by the permitting authority when determining when and where to require such on-site investigations.

5. Finding No. 29 shall be amended to read as follows:

Proposed WPC 40(G)(2)(c)(4) presently states: "The quantity of effluent delivered for each pump cycle shall be equal to 25% of one day's sewage flow . . . ." It was recommended that the words be changed to read: "The

quantity of effluent delivered for each pump cycle shall be no greater than 25% of one day's sewage flow . . . ."

The Agency finds that the suggested change in wording is reasonable and is preferable because it conforms more closely to the purpose underlying WPC 40(G)(2)(c)(4). The goal of this provision is to insure that sewage tank effluent will be discharged to the drainfield in four or more daily doses rather than in less frequent large volume loadings, because the uniform application of sewage tank effluent to the soil treatment area in small volumes assures unsaturated conditions necessary for good purification. It was never the goal of the provision to require minute adjustments in equipment to result in the discharge of exactly 25% of each day's sewage flow with one pump cycle; such a requirement is unnecessarily precise and it would be needlessly difficult to design such a device. The changed wording set forth above achieves the desired goal by requiring dosing at least four times daily.

MINNESOTA POLLUTION CONTROL AGENCY

Joseph F. Grinnell
Chairman

Sandra S. Gardebring
Executive Director

Dated: APR 25 1978

STATE OF MINNESOTA
OFFICE OF HEARING EXAMINERS

FOR THE MINNESOTA POLLUTION CONTROL AGENCY

In the Matter of the Proposed Adoption of Minnesota Regulation WPC 40 setting forth individual sewage treatment system standards

REPORT OF HEARING EXAMINER

The above-entitled matter came duly on for hearing before William Seltzer, Hearing Examiner, on the Seventh day of November, 1977, at the Board Room of the Minnesota Pollution Control Agency, 1935 West County Road B-2, Roseville, Minnesota, commencing at approximately 9:00 a.m. Said hearing was duly recessed and reconvened as follows: Room 158 of the Student Center, Southwest State University, Marshall, Minnesota, on November 10, 1977, commencing at approximately 7:00 p.m.; the Crow Wing County Service Building, Brainerd, Minnesota, on November 14, 1977, commencing at approximately 7:00 p.m.; Room 176 of the Messabi Community College, Virginia, Minnesota, on November 15, 1977, commencing at approximately 7:00 p.m.; the Beaux Arts Ballroom of Bemidji State University, Bemidji, Minnesota, on November 16, 1977, commencing at approximately 7:00 p.m.; Room S-209 of the Fergus Falls Community College, Fergus Falls, Minnesota, on November 17, 1977, commencing at approximately 7:00 p.m.; and the Theater at Rochester Community College, Rochester, Minnesota, on November 21, 1977, commencing at approximately 7:00 p.m.

John-Mark Stensvaag and Marlene E. Senechal, Special Assistant Attorneys General, appeared for and on behalf of the Minnesota Pollution Control Agency Staff (hereinafter sometimes referred to as "PCA Staff") in support of the within considered proposed rules.

All interested persons, representatives of individuals or associations, and other interested groups present at the hearing

had an opportunity to present evidence and question witnesses.

The record of proceedings remained open through the 12th of December, 1977. All written submissions received by the Minnesota Office of Hearing Examiners before the close of the record are to be considered as part of the record of the proceedings.

Pursuant to Minn. Stat. § 15.0412, subd. 4 (1977), this Report shall be available for review to all affected individuals upon request for at least five days. The Board of the Minnesota Pollution Control Agency shall, if it proposes to adopt the rules as originally proposed or amended, submit the complete hearing record, including its Findings and Order to the Chief Hearing Examiner no earlier than ten days subsequent to the receipt of this Report. Such submission shall also clearly indicate any changes made to the rules as originally proposed, preferably in the format that will be submitted to the State Register for publication. The Chief Hearing Examiner shall complete his review and submit his Report to the Minnesota Pollution Control Agency on the issue of substantial changes, if any, in the proposed rules within ten calendar days after receipt of the Findings and Order of the Board of the Minnesota Pollution Control Agency. Thereafter, the Minnesota Pollution Control Agency shall be responsible for filing the rules with the Attorney General.

Unlike the usual procedure wherein PCA Staff drafts proposed rules, the within considered proposed rule was drafted by a Citizens' Advisory Committee, consisting of 45 individuals selected from approximately 120 people, to represent many diverse interests and concerns, including planning and zoning administrators, sanitarians and county health officials, the League of Municipalities, the Minnesota Association of Counties, the construction industry, various State agencies, rural industries, campground associations, resort and tourist establishments, land developers, lakeshore associations, the State Home Builder's Association, and the University of Minnesota's Agri-

cultural Extension Service. The drafting process involved more than 30 meetings of various task forces within the Citizens' Advisory Committee.

The Hearing Examiner, upon all records, files, evidence, arguments of counsel, and written comments filed before the close of the record, hereby makes and issues the following Findings of Fact, Conclusions and Recommendations:

FINDINGS OF FACT

1. On October 7, 1977, the Minnesota Pollution Control Agency filed the following documents with the Chief Hearing Examiner which were accepted by the Minnesota Office of Hearing Examiners as proper and correct as to form and content:

(a) A copy of the proposed rules;
(b) A copy of the Notice of Hearing as mailed;
(c) A Certificate of Delivery of the Secretary of State's list;
(d) An Affidavit of Receipt of Secretary of State's list;
(e) An Affidavit of Mailing;
(f) Statement of Need;
(g) Statement of Evidence; and
(h) Affidavit of Receipt of Response of Notice of Intent to Solicit Outside Opinion, including (1) a copy of the Notice of Intent as published in 1 State Register 742 (1976); (2) a list describing all written comments received in response to said Notice; and (3) originals of all written comments received in response to said Notice.

By letter dated September 6, 1977, the Minnesota Office of Hearing Examiners received the original Order for Hearing as required by Minn. Reg. HE 102, which was accepted and approved by the Minnesota Office of Hearing Examiners.

All documents were available for inspection at the Office of Hearing Examiners from the date of filing to the date of hearing.

2. Due, timely and adequate Notice of Hearing as ordered by the Minnesota Pollution Control Agency was properly served and filed on October 3, 4 and 5, 1977. See, PCA Exhibits 3 through 7. All other relevant, substantive and procedural requirements of statute or rule have been complied with for the purpose of establishing jurisdiction of the subject matter to proceed to public hearing pursuant to law. See, PCA Exhibits

1, and 8 through 12.

3. The legal authority of the Minnesota Pollution Control Agency to promulgate the above-entitled rule is contained in Minn. Stat. §§ 115.01 and 115.03 (1976).

4. The proposed rule establishes standards in order to prevent, control, or abate water pollution within the meaning of Minn. Stat. § 115.03, subd. 1(e) (1976), and is therefore within the jurisdiction and rulemaking authority of the Minnesota Pollution Control Agency.

5. The proposed rule, if adopted, would:

a. Provide minimum standards and criteria for the design, location, installation, use and maintenance of individual sewage treatment systems, which would be administered in the following manner:

(1) The following systems would be required to conform to the requirements of the standards and to make application for a State Disposal System Permit from the Minnesota Pollution Control Agency:

(a) individual sewage treatment systems which serve a single facility generating greater than 15,000 gallons per day; and

(b) collector systems which serve 15 dwellings or 5,000 gallons per day, whichever is less.

(2) Individual sewage treatment systems serving establishments or facilities licensed or otherwise regulated by the State of Minnesota would be required to conform to the requirements of the standards;

(3) The standards would be administered by local units of government in shoreland and floodplain areas and wild and scenic river land use districts pursuant to Minnesota Statutes, Sections 104.04, 104.36 and 105.485 (1976), and regulations of the Minnesota Department of Natural Resources promulgated under those statutes;

(4) Other than the above-mentioned areas of applicability, the standards would serve as recommended guidelines

for the adoption of local ordinances and for the design, location, construction, use and maintenance of individual sewage treatment systems;

b. Create an Advisory Committee on Individual Sewage Treatment Systems for the purpose of reviewing technical data and possible revised standards and legislation, developing and revising a technical manual and educational materials and programs, and advising the Pollution Control Agency and local units of government on the administration of standards and ordinances pertaining to individual sewage treatment systems. See, WPC 40(C)(3).

6. A traditional individual sewage treatment system consists of two parts: The sewage tank and the soil treatment system (often referred to as a "drainfield"). The proper design, location, installation, use and maintenance of each of the two components is essential to the effective operation of the system. [Hansel Prepared Testimony at 24, Tr. Vol. I]

7. In a properly functioning system, the sewage tank traps and retains solids which have been discharged from the dwelling or other establishment. The quantity of solids stored in the tank is significantly reduced either by anaerobic organisms (in a septic tank) or aerobic organisms (in an aerobic tank). The primary purpose of the sewage tank is to remove solids and protect the pores in the soil treatment system from becoming clogged. Adequate size to allow for settling of sewage, decomposition of settling solids, and storage of settled solids is the single-most important feature of a sewage tank. Clogging of the soil treatment system will occur despite adequate sizing; however, if the sewage tank does not contain appropriate components (baffles or sanitary tees) to retain scum and floating solids or if the sewage tank is not pumped out when its capacity for scum and solids retention is exhausted. [Hansel Prepared Testimony at 25-27, Tr. Vol. I]

8. The soil treatment system is the heart of a sewage treatment system, for it is in the soil that most treatment

actually occurs. The effluent from the sewage tank contains numerous pathogens and nutrients and has a high biological oxygen demand; the soil treatment is needed to remove and reduce these pollutants. In a well-functioning soil treatment system, perforated distribution pipes carry the sewage tank effluent through trenches or beds which have been carefully constructed to maximize the surface area where the effluent meets the soil. Several inches of crust rock or filter material support the distribution pipes and allow the effluent to flow freely from the pipes into the trench or bed. At the bottom of the soil treatment system, a "biomass" is formed. This thin layer of microorganisms actually treats the sewage effluent to some extent, but even more importantly, it sets up the conditions which assure that movement of effluent through the soil on the opposite side of the biomass will be "unsaturated" flow. It is in unsaturated flow through the soil (using the force of adhesion rather than gravity) that meaningful treatment of the sewage tank effluent takes place. Within one to two feet below the bottom of a well-functioning bed or trench, all suspended solids, oxygen-demanding particles, dissolve substances, and pathogens are removed by the soil. Nutrients are also removed to some extent, particularly phosphorus, which is absorbed into the surface of soil particles. However, certain compounds, such as sulfates, chlorides, and nitrogen (in the form of nitrates), are not significantly reduced while passing through the soil. Once these molecules enter the groundwater, the only subsequent "treatment" is by dilution in the groundwater. [Hansel Prepared Testimony at 27-30, Tr. Vol. I]

9. Nitrates are of particular concern, because nitrates can cause eutrophication in lakes where they are used by aquatic vegetation. High concentrations of nitrates can also cause disease in human beings, particularly in infants who may experience methemoglobinemia after ingesting high concentration of nitrates, although the incidents of this effect seems low. Nitrates are also considered by experts in the field of

environmental health to be a potential carcinogen if ingested in small quantities over a long period of time. Particularly because of nitrates, the sewage treatment system must be set back an adequate distance from water supply wells and surface waters to allow time for the nitrates to become diluted in the groundwater system. The distances between the soil treatment area and a water supply well or surface water are in a very real sense a part of the sewage treatment "system".

10. The PCA Staff has amply demonstrated the need for the proposed rule. The potential for pollution from existing individual sewage treatment systems is high. Although the precise number is not known, there is approximately 275,000 to 300,000 individual sewage treatment systems in Minnesota, treating approximately 38 to 48 million gallons of sewage per day. This volume exceeds that treated by any single municipal treatment in the State, with the exception of the Metropolitan Pig's Eye Plant and the Duluth Plant. Domestic waste contains many substances which can be harmful to man and to his environment if discharged to the wrong place or in the wrong concentrations. Disease-causing microorganisms, oxygen-depleting organic substances, and nutrients can find their way from improperly constructed or located sewage treatment systems to wells and surface waters. Such adverse impacts have been documented in numerous studies which are in the record of the within considered proceeding. Moreover, local units of government and the Pollution Control Agency continue to receive complaints about sewage tanks which discharge to yards, ditches, lakes and streams. [Hansel Prepared Testimony at 6, 8-10, Tr. Vol. I; PCA Exs. 14, and 19-27]

Finally, in order for the State of Minnesota to comply with federal legislative requirements imposed through the Federal Water Pollution Control Act Amendments of 1972 (P.L. 92-500) as well as regulations issued pursuant thereto, it appears that effective controls respecting non-point source waste discharges will be necessary. The proposed rule is an advancement in that direction.

11. The substantial number of individual treatment systems in Minnesota has led the PCA Staff to two reasonable conclusions reflected in the proposed rule. First, it is not administratively possible to deal with individual systems by setting effluent limitations and by monitoring beneath the surface of the soil to assure compliance with such limitations. As a result, the proposed rule sets forth minimum standards for the design, location, installation, use and maintenance of individual systems which, if followed, will help assure that the groundwaters, surface waters, and public health are protected without monitoring of effluent quality. Second, it is not administratively possible to deal with individual systems by requiring permits for all systems directly from the Minnesota Pollution Control Agency. As a result, the proposed rule will be administered, for the most part, at the local level in those jurisdictions where it is in force. [Hansel Prepared Testimony at 3-7 and 10-11, Tr. Vol. I]

12. The existing standards for individual systems in Minnesota are the Minnesota Health Department Recommended Code (MHD Code) [PCA Ex. 30]. These standards are also included at Appendix E of the Plumbing Code. [PCA Ex. 32] These standards are not regulations, but merely recommendations for use by local units of government and the Health Department.

The need for the within considered proposed rule also stems from the fact that the presently existing recommended Code of MHD has become obsolete despite its 1971 publication date. Most of the research done on individual systems has been conducted in the past five to seven years, after publication of the MHD Code. Most PCA Exhibits which represent research done on septic tanks or present that research in educational works were published after 1971, the date of publication of the MHD Code.

The MHD Code served as the basis and starting point for the development of the within considered rule. Although subjected to thorough scrutiny by the Citizens' Advisory Committee,

many portions were retained, in particular the basic design of the septic tank and the standard sewage treatment system.

The MHD Code emphasizes disposal--getting rid of the waste. The main thrust of WPC 40 is the treatment of waste before it is disposed of. This difference in attitudes accounts for the majority of the specific differences between the two standards. The within considered proposed rule differs from the MHD recommended Code with respect to site evaluation, sizing and compartmentation of sewage tanks, distribution and dosing techniques, sizing and location of the soil treatment, and alternative systems. The proposed rule would give the homeowner or other individual system users many more options than the MHD recommended Code and should provide greater confidence that systems built and maintained in conformance with the rule will perform efficiently and reliably. [Hansel Prepared Testimony at 11-15, Tr. Vol. I, PCA Exs. 35-37 and 30-56]

13. The within considered proposed rule is also needed because of certain Minnesota Statutes, administered by the Minnesota Department of Natural Resources, which require upgrading of individual systems in shorelands, floodplains, and wild and scenic river land use districts. Minn. Reg. Cons. 75(c) and Minn. Reg. NR 84(a)(3) require that all existing systems in shoreland areas be upgraded to meet the requirements of mandatory local ordinances patterned after the MHD recommended Code. The MHD recommended Code provides few meaningful choices for the upgrading of systems on small lots with inadequate soils. Often the property owner is faced with the options of hooking into a public sewer (if one is available nearby) or putting in a holding tank. Both options are expensive and this is especially true of the holding tank when operating costs are considered. The proposed rule at least partially fulfills the need for greater flexibility by allowing alternative systems and by setting forth specifications for their design and construction in Appendix A. These alternative systems will, in many cases, eliminate the need and expense of miles of pipe around lakes or

the need to haul sewage away by truck, while at the same time providing for as good or better treatment on marginal soils than the standard sewage tank/soil treatment system provides on good soils. [Hansel Prepared Testimony at 17-19, Tr. Vol. I, PCA Exs. 28 and 29]

14. Finally, the within considered proposed rule is needed because small communities with a population of less than 500 to 1,000 cannot, in many instances, afford to upgrade existing inadequate sewage treatment systems by means of the traditional sewer system and centralized municipal treatment plant. However, by employing the collector system alternative set forth in Appendix A of the proposed rule, small communities may be able to implement an efficient and reliable sewage treatment system at a reasonable cost. [Hansel Prepared Testimony at 19-24, Tr. Vol. I, PCA Exs. 57 and 58]

15. As discussed above, there is legislative authority for the PCA to adopt the proposed rule. Also, in accordance with the Findings hereinabove, PCA Staff has demonstrated the need for the proposed rule. There only remains the determination of whether or not the rule is reasonable as originally proposed and published or as finally proposed with certain amendments, and whether the rule as finally proposed with post-hearing amendments differs substantially from the rule as originally published and noticed.

16. It is found that the rule as finally proposed is not substantially different from the rule as originally proposed and noticed for hearing when considering the appropriate criteria set forth in the rules of the Minnesota Office of Hearing Examiners. However, it must be noted that should the rule as finally proposed be adopted, the final determination as to "substantial change" rests with the Chief Hearing Examiner.

17. The proposed rule, because it consists of standards for design, construction and location, is in the nature of an engineering blueprint and it would not be possible for an abbreviated Report of this kind to document the reasonableness of

each and every provision. Unless otherwise specifically found, PCA Staff has demonstrated the reasonableness of the proposed rule in the evidence which it has submitted into the hearing record, particularly in prepared testimony of Michael J. Hansel, Roger E. Machmeier, and Richard J. Otis. Moreover, during the course of the public hearing, the reasonableness of most of the specific provisions has not been called into question by any member of the public.

18. Prior to the commencement of the public hearing in Roseville, PCA Staff prepared a list of clarifying changes to the language of the proposed rule for the purpose of correcting typographical errors or providing greater clarity. [PCA Ex. 87] This list has been made available to members of the public at every hearing location, and counsel for the PCA Staff made clear at the outset of each session that the rule being proposed by the Staff would contain these clarifying changes. Subsequent to the close of the hearing, the Citizens' Advisory Committee had informed the Hearing Examiner that it approves of the suggested clarifying changes with one minor amendment with which the PCA Staff concurs.

19. Hereinbelow, specific Findings are made pertaining to the cogent issues raised with regard to the proposed rule. Having considered all issues raised, it is found that those provisions of the proposed rule which are not specifically discussed hereinbelow are reasonable.

20. A noteworthy criticism of the proposed rule is that the rule is, in part, suggested only as a guideline and not a statewide enforceable minimum standard of the Pollution Control Agency. One positive affect of making the rule a statewide enforceable minimum standard would be to enable a local homeowner to protect his neighborhood by giving him a judicial remedy if necessary to enforce adequate treatment upon an adjacent lot builder or common lakefront owner. Otherwise, the concerned neighbor is at the mercy of the county.

However, to change the rule in accordance with the above suggestion would be a significant change from the rule as originally proposed, and may present legal problems concerning sufficiency of public notice regarding the impact of the proposed rule. Furthermore, the Pollution Control Agency is not currently in a position to reasonably administer an enforcement program dealing with individual systems by requiring permits for all such systems. Administrative abatement of various forms of pollution through rule may advance one step at a time, addressing itself to that phase of a particular problem which seems most acute and which is administratively possible.

21. Some concern was expressed in regard to the application of the proposed rule to local units of government. The intent of the proposed rule is that its standards be administered, in most cases, at the local level. See, WPC 40(A) and (C)(1). State agencies will administer the rule only in the following cases:

a. Individual systems which serve a single facility generating more than 15,000 gallons per day;

b. collector systems which serve 15 dwellings or generate 5,000 gallons per day whichever is less; and

c. individual systems serving establishments or facilities licensed or otherwise regulated by the state.

The proposed rule does not, in and of itself, require local units of government to adopt ordinances which reflect the requirements of the proposed rule.

However, if the proposed rule is adopted, regulations of the Department of Natural Resources will require local units of government to adopt and enforce the proposed rule in shoreland areas. The Department of Natural Resources has stated that it will not require existing ordinances to be immediately amended, but newly adopted or newly amended ordinances will be required to comply with the requirements of the proposed rule. Aside from the adoption required by the Department of Natural Resources, local units of government will not be required to adopt the

proposed rule, although they may do so if they wish. [Milles, Tr. Vol. I, pp. 53-57; Hansel Prepared Testimony at 16-18, 47-48, Tr. Vol. I, PCA Exs. 28, 29, 60, 62, 63, 64, 65 and 90]

22. A number of individuals and the Association of On-Site Sewage Contractors have challenged the reasonableness of the 100-foot setback provided in Table IV for locating a drainfield in relation to a water supply well less than 50 feet deep and not encountering at least 10 feet of impervious material. Table IV is set forth following WPC 40(H)(2)(d)(3).

The PCA Staff established during the hearing process that studies indicate that nitrates may travel as far at 100 feet in concentrations high enough to pose a health hazard. However, PCA Staff also produced evidence to the effect that nitrates may travel farther than 100 feet in concentrations high enough to pose a health hazard. Therefore, it is arguable that the 100-foot designation is arbitrary, and that the distance should be set at something less than 100 feet or something more than 100 feet.

One suggestion raised was that a distance of 50 feet be allowable provided annual testing of the susceptible well is conducted. However, it would be difficult to enforce such a procedure. The susceptible well may be on a neighbor's property and there should be no burden on such neighbor to either go to the expense of annual testing or for the neighbor to have to permit the owner (or his agent) of the sewage treatment system to enter the neighbor's property annually for the purpose of testing.

Other problems with the 100-foot setback requirement are that it is likely that there are currently hundreds of sewage treatment systems with no more than a 50-foot separation which are safe and economically practical for hundreds or thousands of lakeshore lots. Many such sites have been occupied for 25 years or more. Additionally, the Minnesota Department of Natural Resources in 1973, required counties, with lake or stream

shorelands, to adopt a Shoreland Management Program complying with certain requirements, including a 50-foot shallow well separation, as then imposed by the Minnesota Department of Health. To this date, those original regulations are being administered, unaltered, by the Ottertail County "Land and Resources Management" office; notwithstanding the fact that there is currently a conflict between the requirements of the Minnesota Department of Natural Resources and the Minnesota Department of Health's Water-Well Code.

It is altogether likely that there is justification for any conflict between various regulations and codes. For example, rules or guidelines designed to protect shoreland may be principally designed to protect aquatic life, while rules or regulations concerning sewage treatment systems may be primarily concerned with protecting well water utilized for human consumption. Although each set of rules must stand on their own merits, there is no showing in the record that any such conflicts are reasonable and the Examiner will not summize.

There is sufficient evidence in the record for one to conclude that the 100-foot setback requirement is likely to cause increased economic burden because of added installation costs and also likely to present additional technical burdens in instances where it may be impossible or difficult to find enough space for the required setback. Such economic or technical burdens may well be justified if the benefit derived results in a corresponding benefit to human health and the environment. However, there should be adequate provision for those instances where strict compliance would cause undue hardship. Nevertheless, the variance section of the proposed rule only applies in cases where a permit is required by the Pollution Control Agency. The proposed rule is silent with respect to its impact in instances where the rule will be enforced by local units of government rather than the Pollution Control Agency. Furthermore, there is no showing in the record regarding local ordinances and any applicable variance procedures that may be

contained therein which would apply if the proposed rule would cause undue hardship. If the proposed rule had provided a recommended variance procedure for all persons impacted and not just those persons required to obtain a permit from the Pollution Control Agency, the situation would be different.

23. The setbacks from the ordinary high water mark of lakes and rivers, set out in Table IV, were also challenged.

As is the case with the above-discussed 100-foot setback provision, PCA Staff urges the Hearing Examiner to find the setbacks from the ordinary high water mark of lakes and rivers as originally proposed to be reasonable. See, PROPOSED FINDINGS OF FACT, CONCLUSIONS AND RECOMMENDATIONS OF MPCA STAFF at pp. 14-15.

Nevertheless, subsequent to the close of the hearing, the Citizens' Advisory Committee recommended and PCA Staff urged the Hearing Examiner to likewise find reasonable Table IV as changed in the following respect:

TABLE IV
Minimum Setback Distances (feet)

Feature	Sewage Tank	Soil Treatment Area
Water Supply well less than 50 feet deep and not encountering at least ten feet of impervious material	~~50~~*	~~100~~*
Any other water supply well or buried water suction pipe	~~50~~*	~~50~~*
Buried pipe distributing water under pressure	~~10~~*	~~10~~*
Buildings	10	20
Property Lines	10	10
The Ordinary High Water Mark of:		
Natural Environmental Lakes and Rivers	~~150~~**	~~150~~**
Recreational Development Lakes and Streams	~~75~~**	~~75~~**
General Development Lakes and Streams	~~50~~**	~~50~~**
Wild Rivers	~~150~~**	~~150~~**
Scenic Rivers	~~100~~**	~~100~~**

TABLE IV (cont.)

Recreational Rivers and Designated Tributaries of Wild, Scenic and Recreational Rivers	75**	75**

* Setbacks from water supply wells and buried water pipes are presently governed by Minn. Reg. MHD 217(c)(1)(dd), (ee) and (ff). These regulations, as of the date of enactment of this rule, are reproduced in Appendix D.

**Setbacks from lakes, rivers and streams are presently governed by Minn. Reg. Cons. 72(b)(4), NR 79(d)(2) and NR 83(d)(2)(dd). These regulations, as of the date of enactment of this rule, are reproduced in Appendix E.

The PCA Staff supports the reasonableness of revised Table IV as set out hereinabove on the reasoning that it may alleviate to some extent the concern of affected individuals by making it possible for them to change the setback requirement in the future by obtaining the amendment of only one regulation (that of the Minnesota Health Department or the Minnesota Department of Natural Resources), rather than two regulations.

In accordance with the above, the Hearing Examiner finds that issues concerning the setback distances in Table IV should be set for rehearing by the Board of the Pollution Control Agency. Both the Minnesota Department of Health and the Department of Natural Resources should be urged to participate fully and completely. If there are any conflicts between the proposals presented and the existing rules or guidelines of other agencies, the conflicts should be explained so that the proposed rule can stand on its own merit. The purpose and function of each rule of the various agencies should be fully explained and the proposers should examine the possibility of establishing setback standards that are easily subject to some variance procedure.

24. Proposed WPC 40(C)(1)(a)(1) and (2) require certain facilities to conform to the requirements of the proposed rule and to: ". . .make application for a State Disposal System Permit from the Agency." The obvious intent is something other than requiring an applicant to merely file an application. Therefore, the language should be appropriately changed to reflect the fact

that an applicant must receive said permit.

25. Proposed WPC 40(D)(2) gives the "permitting authority" an unreasonable amount of discretion and lacks specific criteria which permitting authorities must use in making their determinations. The permitting authority is requested to form an "opinion" as to whether or not the information supplied is adequate. There are no guidelines set up by which the formulation of such opinions are to be made. Specific criteria should be specified in accordance with the general tenor of the proposed rule. Otherwise, this section gives permitting authorities an unreasonable amount of subjective discretion.

Additionally, this section states: "A preliminary evaluation shall be made of publicly available, existing date. . . ." It would be advisable to delineate the forms or types of acceptible "publicly available existing data."

26. Proposed WPC 40(D)(3) specifies the procedures for soil borings and percolation tests. This subpart continues by setting forth the methods for securing soil borings and percolation tests. However, the proposed rule does not clearly specify where soil borings and percolation tests are required. This ambiguity is found to be unreasonable and the proposed rule should specifically specify those instances where soil borings and percolation tests are required.

27. A number of comments were made challenging the reasonableness of WPC 40(E). Specifically, the provisions challenged were:

a. No building sewer shall be less than four inches in diameter.

b. Any portion of a building sewer, building drain or branch thereof less than 50 feet from a well must be constructed of cast iron.

It is found that these provisions are reasonable as:

a. A four-inch pipe is necessary to handle peak flow.

b. Cast iron is currently advisable within 50 feet of a well because of its strength. Some materials, other than

cast iron, can be twisted or bent by the process of settling which can result in a local buildup of solids or freezing problems during winter due to the accumulation of standing water. This could, in turn, result in contamination of the well. Some other materials may easily crack if installed during the cold winter season. However, a close watch should be made on the advances of other materials that may well be developed to successfully compete with cast iron while being lighter, easier to handle and possibly less costly.

28. The Building Code Division, Minnesota Department of Administration, also recommended the deletion of the entire section WPC 40(E) because of possible conflicts with the Minnesota Plumbing Code. [PCA Ex. 69]

Subsequent to the close of the hearing, the Citizens' Advisory Committee recommended to the Hearing Examiner that the entire Section E be deleted and replaced with the following:

E. Building Sewers

The design, construction, and location of, and the materials for use in building sewers are presently governed by the Minnesota Building Code which, in Minn. Reg. SBC 8701, incorporates by reference the Minnesota Plumbing Code, Minn. Reg. MHD 120-135, and by specific provisions of the Minnesota Water Well Construction Code, Minn. Reg. MHD 217(c)(1)(dd), (ee) and (ff). Relevant portions of the Minnesota Plumbing Code, as of the date of enactment of this rule, are reproduced in Appendix C. Minn. Reg. MHD 217(c)(1)(dd), (ee) and (ff), as of the date of enactment of this rule, is reproduced in Appendix D.

The Hearing Examiner finds that the change recommended by the Citizens' Advisory Committee is reasonable and should be adopted and will alleviate any possible conflict with the Minnesota Plumbing Code.

29. Proposed WPC 40(G)(2)(c)(4) presently states: "The quantity of effluent delivered for each pump cycle shall be equal to 25% of one day's sewage flow. . . ." It was recommended that the verbage be changed to read: "The quantity of effluent delivered for each pump cycle shall be no greater than 25% of one day's sewage flow. . . ." The suggestion was apparently put forth to improve filtration of pathogens. The

Examiner cannot ascertain from the record the reasonableness of the proposed verbage change. The suggestion is contained in a letter from the Agricultural Extension Service of the University of Minnesota dated November 30, 1977, and signed by Roger E. Machmeier. A copy of said letter is attached hereto as: "Attachment 1". Should the Board of the Pollution Control Agency decide to accept the suggested language change, the Examiner makes the preliminary Finding that such change would not be of substantial nature. Naturally, paramount import dictates that the language chosen should be that language which best eliminates pathogens from the environment.

30. That WPC 40(H)(2)(c)(1) requires that the depth from the soil treatment system to the groundwater table or bed rock be at least three feet. The suggestion was made that a four-foot depth be required. The Examiner finds that three feet is a reasonable separation distance as it provides for adequate treatment of sewage. Three feet of unsaturated soil will remove all suspended solids and pathogenic organisms. A four-foot requirement is not necessary and, in many cases, may pose an economic hardship. [Hansel Prepared Testimony at 126, Tr. Vol. I; Otis Prepared Testimony at 3-13, Tr. Vol. I, PCA Exs. 14, 15, 35, 37, and 51]

31. Also, with regard to WPC 40(H)(2)(c)(1), it was suggested that the separation distance from the bottom of beds and trenches be measured to the ordinary high water mark (instead of the water table), because of the difficulty in ascertaining the highest known groundwater level. It is found that it is reasonable to measure the distance to the water table as there are a number of ways the water table can be determined: (a) Preliminary evaluation of publicly available existing data, such as Soil Conservation Service maps; (b) field testing to ascertain existence of mottling; or (c) field testing in early spring to determine the highest groundwater accumulation. It would not be reasonable to measure the distance to the ordinary high water mark as the level of water in the adjacent body of

surface water is not necessarily the same as the groundwater level adjacent to it. [Tr. Vol. I, Book III, pp. 223-229]

32. Comment was also made at the hearing that the proposed rule imposes a burden on local units of government because it would be costly to administer and enforce. It is found that the proposed rule does not, in and of itself, require the expenditure of any funds by local governments because the proposed rule does not, independently, require any action by local governments. Any added expenditure will be the result of voluntary adoption by local governments or required adoption pursuant to Minnesota Department of Natural Resources' regulations. Furthermore, there was no showing that any expenditures incurred would be unreasonable, especially as compared to the benefit gained by implementation of the rule.

33. The proposed rule was criticized with respect to its failure to designate the qualifications or establish a certification program for such persons as site evaluators, zoning administrators or system installers. It is found that the proposed rule cannot fail for lack of reasonableness by reason of precluding such provisions.

However, the inclusion of a provision which designates the qualifications of such persons would enhance the effectiveness of the guidelines contained in the proposed rule, and go a long way toward bringing about statewide uniformity and ensuring proper site evaluation, installation, etc. Therefore, the Pollution Control Agency should examine the possibilities of making an appropriate proposal in the future after due consideration.

34. The make-up of the Citizens' Advisory Committee established by the proposed rule was criticized for a variety of reasons. The Examiner finds that the make-up of the Advisory Committee is reasonable for the following reasons:

a. The group most affected by individual sewage treatment systems standards are all represented.

b. The committee represents a balance between county

and municipal units of government, between metropolitan and outstate areas, and between contractors and local administrators.

c. The groups represented all have technical, practical and administrative expertise in the area of individual sewage treatment system standards.

35. In addition to items discussed in this Report, a number of comments were made in regard to very specific or minor provisions of the proposed rule. Many of these comments were directly addressed by PCA Staff. See, Hansel Prepared Testimony at 186-199. Other comments were indirectly addressed through the testimony of PCA Staff witnesses and exhibits. Other comments are deemed inappropriate or inconsistent with the weight of evidence as produced in the record of the within considered proceedings.

The Hearing Examiner finds that except as specified hereinabove in this Report, the proposed rule is reasonable.

CONCLUSIONS

A. The Minnesota Pollution Control Agency duly acquired and now has jurisdiction over this proceeding.

B. All relevant legal and procedural requirements of statute and rule have been properly complied with.

C. The Minnesota Pollution Control Agency has statutory authority to promulgate and adopt the proposed rule.

D. Considering the complete record of the within proceedings and considering the rule as originally proposed, the Hearing Examiner concludes that the proposed rule, as amended in accordance with the Recommendations, infra, is reasonable and necessary for the purposes of complying with Minn. Stat. § 115.03, subd. (1)(e) (1976) and satisfies the legislative intent to prevent, control and abate water pollution.

E. In proposing the changes suggested by this Hearing Examiner in the Recommendations, infra, and reviewing the proposed rule as noticed for public hearing, consideration was given to Minn. Reg. HE 108, which sets forth the criteria

necessary to determine whether a rule as finally adopted is substantially different from the rule as originally proposed.

RECOMMENDATIONS

IT IS HEREBY RESPECTFULLY RECOMMENDED: That the Minnesota Pollution Control Agency adopt proposed Minn. Reg. WPC 40 as published in 1 State Register 710 (October 3, 1977) with the following changes:

1. Section (B)(29) (p. 711):

   29. SEEPAGE PIT (or leaching pit or dry well) An underground pit into which a sewage tank discharges sewage effluent or other liquid waste and from which the liquid seeps into the surrounding soil through the bottom and openings in the side of the pit.

2. Section (C)(1)(a)(1) and (2) (p. 712):

   This Section should be adopted with amendments to conform with the Findings in Paragraph 24 hereinabove.

3. Sections (D)(2) and (3) (p. 714):

   These Sections should be adopted with amendments pursuant to the Findings of Paragraphs 25 and 26 hereinabove.

4. Table I as set forth following section (G)(1)(b)(4) (p. 719):

   TABLE I

   Maximum Allowable Lateral Lengths In Feet From Header Pipe

5. Section (G)(2) (p. 719):

   2. Dosing. A Dosing device is not necessary in all situations but, where used, shall comply with the following requirements.

6. Section (G)(2)(b)(1) (p. 719):

   (1) Where a dosing device is employed, ~~A~~ a pump or siphon shall deliver the dose to the soil treatment unit for gravity distribution over the soil treatment area.

7. Section (G)(2)(c)(2) (pp. 719-720):

(2) The pump discharge capacity shall be at least ~~30~~ seven and one-half gallons per minute for ~~a-three-bedroom-or-smaller-dwelling-and-an additional-ten-gallons-per-minute-for-each-bedroom-above-three.--For-other-establishments, the-pump-discharge-shall-be-ten-gallons-per minute-for-each-200-gallons-per-day-of-sewage flow-or-30-gallons-per-minute,-whichever-is greater,~~ each 100 square feet of soil treatment area.

8. Section (G)(2)(c)(4) (p. 720):

(4) The quantity of effluent delivered for each pump cycle shall be equal to (or no greater than) 25 percent of one day's sewage flow~~,or-200-gallons,-whichever-is-greater.~~ See, Findings in Paragraph 29 hereinabove.

9. Section (H)(2)(a)(1), (2), and (3) (p. 720):

(1) The required soil treatment area shall be determined by ~~number-of-bedrooms-(see-sections-(B)(6) and-(C)(2)(e))~~ the daily sewage flow and the percolation rate of the soil. ~~for-dwellings, the-sum-of-the-areas-required-for-each-individual unit-for-multiple-residential-units,-and-by-the daily-sewage-flow-for-other-establishments.--See-section-(B)(33).~~

~~(2) The-minimum-soil-treatment-area-required-for-any dwelling-shall-provide-for-at-least-two-bedrooms.~~

~~(3)~~ (2) ~~Estimates-of~~ Acceptable methods for estimating sewage flow for dwellings are given in Table II. The minimum daily sewage flow estimated for any dwelling shall provide for at least two bedrooms. For multiple residential units, the estimated daily sewage flow shall consist of the sum of the flows of each individual unit.

10. *Table II set forth in section (H)(2)(a)(3) (p. 720):

"Size IV: ~~(Greywater System):--Sewage Flow--60% of the average flow~~ If a greywater system is employed pursuant to Appendix A, section (D)(2), estimated sewage flow shall equal 60% of the amount provided in Column I, II, or III of Table II."

11. Add to section (H)(2)(a) (p. 720):

"(3) For other establishments, the daily sewage flow shall be determined as provided in section (B)(33)."

12. Table III set forth in section (H)(2)(a)(4) (p. 720):

TABLE III

PERCOLATION RATE (Minutes per inch)	REQUIRED SOIL TREATMENT AREA IN SQUARE FEET (Per Gallon of Waste Sewage Flow per Day)

13. Section (H)(2)(b)(1) (p. 720):

(1) On slopes in excess of 12 percent, the soil profile shall be carefully evaluated in the location of the proposed soil treatment system and downslope to identify the presence of layers with different permeabilities that may cause sidehill seepage. In no case shall a trench be located within 15 feet of where such a layer ~~surfacing~~ surfaces on the downslope.

14. Section (H)(2)(c)(9)(c) (p. 721):

(c) Agricultural drain tile shall be in 12-inch lengths and laid with ~~one-half~~ one-fourth inch open joints on grade boards. All open joints shall be protected on top by strips of asphalt-treated building paper at least ten inches long and three to six inches wide or by other acceptable means.

15. Section (H)(2)(c)(10)(b) (p. 721):

(b) Perforations shall be sized and spaced as shown in Table ~~II~~ I set forth ~~in~~ following section ~~(H)(2)(a)(3)~~ (G)(1)(b)(4).

16. Section (H)(2)(c)(12) (p. 721):

(12) ~~The~~ Gravity distribution pipes in beds shall be

uniformly spaced no more than five feet apart and not more than 30 inches from the side walls of the bed.

17. Section (K) (p. 723):

K. VARIANCE

In any cases where a permit is required by the Agency, and upon application of the responsible person or persons, the Agency finds that by reason of exceptional circumstances the strict enforcement of any provision of these standards would cause undue hardship, that disposal of the sewage, industrial waste or other waste is necessary for the public health, safety or welfare, or that strict conformity with the standards would be unreasonable, impractical or not feasible under the circumstances, the Agency in its discretion may permit a variance therefrom upon such conditions as it may prescribe for prevention, control or abatement of pollution in harmony with the general purpose of these standards and the intent of applicable state and federal laws.

18. Appendix A, section (B)(1) (p. 723):

B. Adoption and Use

1. Where WPC-40 is administered by a local unit of government, those local units of government may adopt this appendix, in whole or in part, as part of a local code or ordinance. Nothing in WPC-40 or this appendix, however, shall require the adoption of any part of this appendix as a local ordinance or code. Further, nothing in WPC-40 or this appendix shall require local units of government to allow the installation of any system in this appendix.

19. Appendix A, section (B)(2) (p. 723):

~~2. Where these standards are administered by the Agency or the Minnesota Department of Health, these~~

~~standards~~ This Appendix defines the minimum requirements for alternative systems~~.~~ serving establishments or facilities licensed or otherwise regulated by the State of Minnesota or this Agency, pursuant to section (C)(1)(a).

20. Appendix A, section (C)(5)(a) (p. 724):

a. Filter material for a soil treatment unit using ~~gravity-distribution-of-effluent~~ shall not be placed in contact with original soil having a percolation rate faster than one-tenth minute per inch.

21. Appendix A, section (D)(2)(b)(2)(h) (p. 725):

(h) All liquids and ~~soils~~ solids removed from a vault privy shall be treated and disposed of by application in accordance with the Agency's septage disposal guidelines.

22. Appendix A, section (E)(1)(o)(6) (p. 727):

(6) The quantity of effluent per pump dose shall be at least ~~150-gallons-per-bedroom-for-dwellings.-For-other-establishments-the-dose-shall-be-at~~ least 25 percent of the estimated or measured daily sewage flow.

23. Appendix A, section (E)(1)(p)(1) (p. 727):

(1) Perforation holes shall be as set forth in Table I set forth in section (G)(1)(b)(4). Holes shall be drilled straight into the pipe and not at an angle.

24. Appendix A, section (E)(2)(b)(3)(a) (p. 728):

(a) Sewer systems shall be designed on an estimated average daily flow for dwellings based on Table II, set forth in section (H)(2)(a)~~(3)~~(2), plus estimated flows from other establishments.

25. Appendix A, section (E)(4)(d)(1) (p. 729):

(1) Required treatment area shall be determined by the percolation test described in section (D) and

from Tables II and III, set forth in sections (H)(2)(a)~~(3)~~(2) and (4), with no reduction for increased filter material below or around the pit. In no case shall a seepage pit be installed in soils where the percolation rate of any stratum is faster than one-tenth minute per inch (coarse sand). A percolation test shall be made in each vertical stratum penetrated by the seepage pit, and the weighted average of the results, exclusive of results from soil strata in which the percolation rate is slower than 30 minutes per inch, shall be computed and applied to the seepage bed column of Table III as indicated.

26. Appendix A, section (F)(6)(b) (p. 730):

b. As specified for septic tanks in Table ~~I~~ IV, set forth ~~in~~ following section ~~(6)(I)(b)~~ (H)(2)(d)(3).

27. Figure 7:

Delete entire table, entitled "Allowable Lateral Lengths in Feet", from upper left-hand corner of page.

28. Section (E) (p. 715):

Delete the entire section (E) and substitute the following:

E. Building Sewers

The design, construction, and location of, and the materials for use in building sewers are presently governed by the Minnesota Building Code which, in Minn. Reg. SBC 8701, incorporates by reference the Minnesota Plumbing Code, Minn. Reg. MHD 120-135, and by specific provisions of the Minnesota Water Well Construction Code, Minn. Reg. MHD 217(c)(1)(dd), (ee) and (ff). Relevant portions of the Minnesota Plumbing Code, as of the date of enactment of this rule, are reproduced in Appendix C. Minn. Reg. MHD 217(c)(1)(dd), (ee) and (ff), as of the date of enactment of this rule, is reproduced in Appendix D.

29. Table IV as set forth following section (H)(2)(d)(3) (p. 722):

In accordance the Hearing Examiner's Findings, it is recommended that the Pollution Control Agency set for re-hearing or further hearing issues concerning the setback distances in Table IV. See, Findings hereinabove at

Paragraphs 22, and 23.

Notwithstanding the above, if the Board of the Pollution Control Agency determines to adopt setback distances at this time, it is recommended that as between Table IV as originally proposed and Table IV as finally proposed by PCA Staff, the Board should adopt the latest recommendation of PCA Staff; to wit:

TABLE IV
Minimum Setback Distances (feet)

Feature	Sewage Tank	Soil Treatment Area
Water Supply well less than 50 feet deep and not encountering at least ten feet of impervious material	~~50~~ *	~~100~~ *
Any other water supply well or buried water suction pipe	~~50~~ *	~~50~~ *
Buried pipe distributing water under pressure	~~10~~ *	~~10~~ *
Buildings	10	20
Property Lines	10	10
The Ordinary High Water Mark of:		
Natural Environmental Lakes and Rivers	~~150~~ **	~~150~~ **
Recreational Development Lakes and Streams	~~75~~ **	~~75~~ **
General Development Lakes and Streams	~~50~~ **	~~50~~ **
Wild Rivers	~~150~~ **	~~150~~ **
Scenic Rivers	~~100~~ **	~~100~~ **
Recreational Rivers and Designated Tributaries of Wild, Scenic and Recreational Rivers	~~75~~ **	~~75~~ **

* Setbacks from water supply wells and buried water pipes are presently governed by Minn. Reg. MHD 217(c)(1)(dd), (ee) and (ff). These regulations, as of the date of enactment of this rule, are reproduced in Appendix D.

**Setbacks from lakes, rivers and streams are presently governed by Minn. Reg. Cons. 72(b)(4), NR 79(d)(2) and NR 83(d)(2)(dd). These regulations, as of the date of enactment of this rule, are reproduced in Appendix E.

30. Appendix A, section (E)(4)(c) (p. 729):

All references to Table IV must be made to conform with any final action the Board of the Pollution Control Agency takes regarding the Findings hereinabove at Paragraphs 22 and 23, and as found in the Recommendations at

Paragraph 29.

Should the Board elect to adopt setback distances at this time, then the following language is recommended for subpart c.

c. Seepage pits, in addition to the general provisions ~~under section (H)(2)(e)~~ specified in Table IV following section (H)(2)(d)(3), shall be set back not less than the stated minimum distances from the following:

31. Table II set forth in section (H)(2)(a)(3) (p. 720):

TABLE II

Sewage Flow (Gallons Per Day)

Number of Bedrooms	Size Classification of Dwelling*			
	I	II	III	IV
2	300	225	180	---
3	450	300	218	---
4	600	375	256	---
5	750	450	294	---
6	900	525	332	---

*Table II is based on the following formulas:

Size Classification I: Sewage Flow = 150(# of Bedrooms)

Size Classification II: Sewage Flow = 75(# of Bedrooms + 1)

Size Classification III: Sewage Flow = 66 + 38(# of Bedrooms + 1)

Size Classification IV: (Greywater System): Sewage Flow = 60% of the average sewage flow

32. Section (B)(27) (p. 711):

27. Plastic limit. A soil moisture content below which the soil may be manipulated for purposes of installing a soil treatment system, and above which manipulation will cause compaction and ~~pudding~~ puddling.

Dated: March 24, 1978.

WILLIAM SELTZER
Hearing Examiner

Attachment No. 1

AGRICULTURAL EXTENSION SERVICE

UNIVERSITY OF MINNESOTA

Department of Agricultural Engineering
1390 Eckles Avenue
St. Paul, Minnesota 55108

RECEIVED
DEC 2 1977
OFFICE OF HEARING EXAMINERS

November 30, 1977

William Seltzer
Hearing Officer, WPC-40
1745 University Avenue
Suite 300
St. Paul, MN 55104

SUBJECT: Additional Comments on WPC-40

Dear Mr. Seltzer:

My comments are in reference to item G.2.c.(4) which presently states "The quantity of effluent delivered for each pump cycle shall be equal to 25% of one day's sewage flow."

I suggest that item G.2.c.(4) be changed to read as follows: "The quantity of effluent delivered for each pump cycle shall be no greater than 25% of one day's sewage flow."

My reasons for proposing this change are as follows:

1. The value of 25% was established based on 4 pump cycles per day in order to provide for reasonable pump life, particularly for home installations where a single pump would be installed.

2. Research results from the Small Scale Waste Management Project at Madison, Wisconsin indicates that for adequate filtration of pathogens effluent should be applied to the bed at least 4 times per day. The research suggests that better treatment will be provided if smaller doses of effluent are applied. The reason is that there is not a major saturated front of effluent moving down through the soil carrying pathogens. Rather, smaller saturated zones are applied and these tend to distribute through the soil providing for better pathogen removal.

3. It is true that a minimum dose size is required to fill the small pressure pipes but this is provided for in item G.2.a.(3) which specifies a minimum dose size of 75 gallons.

4. Wherever dual pumps are used on an alternating basis the total number of pump cycles is twice the number of cycles for each individual pump. Thus, if four cycles per day is a reasonable number as far as pump life is concerned, then dual pumping stations should be allowed to operate on the basis of 8 cycles per day. The same volume of effluent

is being pumped in each 24 hour period but the size of the dose is determined by the total number of pump cycles. As pointed out above, research indicates that smaller more frequent doses will provide for more adequate sewage treatment.

5. In the case of dual pumping stations for collector systems or other establishments, the requirement of dose size being equal to 25% of one day's sewage flow would require an unnecessarily large volume for the pumping tank. While this is not necessarily justification for requiring tank volume, better design and better treatment can be achieved with smaller more frequent doses. As an example, large pumping tank volume would better be utilized as emergency storage capacity in the event of pump failure.

6. In appendix A, item E.1.o.(6) states that "The quantity of effluent per pump dose shall be at least 25% of the estimated or measured daily sewage flow." This is not a contradiction since this item speaks to gravity distribution through 4" pipes in a mound. The purpose of this minimum dose is for coverage of the rock area with effluent in order to provide for good sewage treatment. This item which refers to gravity distribution is not in conflict with the item which refers to pressure distribution.

For the above reasons it is my opinion that WPC-40 will provide for more effective sewage treatment if item G.2.c.(4) be changed to read "The quantity of effluent delivered for each pump cycle shall be no greater than 25% of one day's sewage flow."

I have discussed the above change with Mike Hansel of the Minnesota Pollution Control Agency and he concurs with my reasons and agrees that the change should be made as I have suggested.

In the development of WPC-40 I have been responsible for the technical material on pressure distribution and dosing systems. In my opinion, the Citizens' Advisory Committee will concur with my suggestions concerning these technical considerations. If you feel it is necessary, I will be happy to send a copy of this letter to members of the Technical Subcommittee which developed WPC-40. If you have any questions concerning my comments above, please feel free to call me at 373-0764.

Sincerely,

Roger E. Machmeier

Roger E. Machmeier
Chairman, Technical Subcommittee of the Citizens' Advisory
Committee to the Minnesota Pollution Control Agency

REM:sl

cc: Mike Hansel

APPENDIX C

MHD 123 Materials

(a) Quality of Materials. All materials used in any drainage or plumbing system or part thereof, shall be free from defects, and no materials which are damaged or defective, shall knowingly be installed.

(b) Identification of Materials. All materials must be marked, unless otherwise easily identifiable, so as to provide a visual means of identification as to types, grades, weights, and strengths. The installer shall, as far as possible, position the identification marks so as to provide ease of inspection by the Administrative Authority.

(c) Standards for Plumbing Materials

(1) Approved Materials. A material shall be considered approved if it meets one or more of the standards cited in Table 123(c)(3) **Standards for Plumbing Materials.** Materials not listed in Table 123(c)(3) shall be used only as provided for in MHD 122(h)(3), or as permitted elsewhere in this Code.

(2) Abbreviations. Abbreviations in Table 123(c)(3) refer to the following:

ANSI — American National Standards Institute
10 East 40th Street
New York, New York 10016

ASTM — American Society for Testing and Materials
1916 Race Street
Philadelphia, Pennsylvania 19103

AWWA — American Water Works Association
2 Park Avenue
New York City, New York 10016

CS — Commercial Standards Available From:
Commodity Standards Division
Office of Industry and Commerce
U. S. Department of Commerce
Washington, D. C. 20234

FS — Federal Specifications Available From:
Federal Supply Service
Standards Division—General Services Administration
Washington, D. C. 20406

NSF — National Sanitation Foundation
Ann Arbor, Michigan 48106

FHA — Federal Housing Authority
Architectural Standards Division
Washington, D. C.

TABLE 123 (C) (3)

STANDARDS FOR PLUMBING MATERIALS

DESCRIPTION	ANSI	ASTM	FS	OTHER
I. CAST IRON PIPE & FITTINGS	A21.2 A21.6	A-74	WW.P.401C	CS188
1A Cast Iron Pipe & Fittings Extra Heavy	A21.8			
1B Cast Iron Pipe Centrifugally Cast only and fittings	A21.6	A-74	WW.P.401C	CS188
Service Weight	A21.8			
1C Cast Iron Mechanical	A21.11		WW-P-421a	
(Gland Type) Pipe	A21.2 A21.6			
1D Cast Iron Mechanical	A21.8			
(Gland Type) Pipe Cement Lined	A21.4 A21.2 A21.6 A21.8			
1E Cast Iron Short Body Water Service Fittings (2"-12")	A21.10			AWWA C100
1F Cast Iron Threaded Pipe	A40.5			
1G High Silicon Pipe, Fittings Cast Iron			WW-P-501	
1H Cast Iron Threaded Fittings Black and galvanized 125#	B16.4		WW-P-491	
1J Cast Iron Drainage Fittings Black and Galvanized	B16.12			
1K Hubless Cast Iron Pipe and Fittings (amended 8-31-72)				CISPI Standard 301-69T

* * * * *

V. SILICA AND EARTH PRODUCTS PIPE AND FITTINGS, NON METALLIC			
5A Asbestos—Cement	C500	SS-P351	
Pressure Pipe and Fitting	C296		
5B Asbestos—Cement Water Pipe and Fittings	C500	SS-P-351	AWWA C400
5C Asbestos—Cement Non Pressure Pipe and Fittings	C428	XX-P-331	
5D Asbestos—Cement Perforated Underdrain Pipe and Fittings	C508		
5E Vitrified Clay Pipe, Standard	C13		
Strength and Stronger fittings	C200		
5F Unglazed Clay Pipe, Extra Strength and fittings	C278		
5G Perforated Clay Pipe and Fittings	C211		
5H Borosilicate Glass Pipe and Fittings 60 psi			
5J Non Reinforced Concrete Draintile	C412		AASHO M178

5K Non Reinforced Concrete Pipe	C14	SS-P-371	AASHO M86
5L Perforated Concrete Pipe, Underdrainage	C444		
5M Reinforced Concrete Pipe	C76	SS-P-375	
5N Reinforced and Prestressed Concrete Pipe, Pressure Type and Fittings			
5O Bituminized Fiber Drain and Sewer Pipe	D1860	SS-P-1540A	(Amended 8-31-72)
5P Perforated Bituminized Fiber Pipe for General Drainage	D2311	SS-P-1540A	(Amended 8-31-72)
VI. PLASTIC PIPE AND FITTINGS DRAIN, WASTE AND VENT			
6A Acrylonitrile-Butadiene-Styrene (ABS) Type 1, Schedule 40	D2661	L-P-322a FHA-MPS	HSF14 CS270
6B Polyvinyl Chloride (pvc) Schedule 40 Unthreaded Schedule 80 can be threaded	D2665	L-P-320a FHA-MPS	NSF14 CS272
BUILDING SEWER			
6C (1) Styrene—Rubber	D2852	L-P-001221 (Filed 4-5-73)	CS228
6C (2) Polyvinyl Chloride (pvc) (Amended 4-5-73)	D3033 D3034	FHA-UM-26 WW-P-00380a	

* * * * *

(d) Piping System Materials

* * * * *

(4) Building Sewers

(aa) Cast Iron 1A and 1B and fittings and Hubless Cast Iron 1K. *(Amended 6-26-72)*

(bb) Cast Iron 1C and 1D with 1E fittings.

(cc) Asbestos Cement 5A and 5C and fittings laid on a continuous granular bed and only in yard areas.

(dd) Clay pipe and fittings 5E laid on a continuous granular bed.

(ee) Concrete pipe 5K in yard areas and not under permanent streets, laid on a continuous granular bed.

(ff) Concrete 5N.

(gg) Plastic 6A, 6B, 6C(1), and 6C(2) laid on a continuous granular bed in yard areas. *(Amended 4-5-73)*

(hh) Bituminized-fiber drain and sewer pipe 50, laid on a continuous granular bed. *(Amended 8-31-72)*

* * * * *

MHD 124 Joints and Connections

(a) Types of Joints for Piping Materials

(1) **Tightness.** Joints and connections in the plumbing system shall be gastight and watertight for the pressure required by test, with the exception of those portions of perforated or open joint piping which are installed for the purpose of collecting and conveying ground or seepage water.

(2) Types of Joints

(aa) **Caulked Joints.** Caulked joints for cast-iron bell and spigot soil pipe shall be firmly packed with oakum or hemp and filled with molten lead not less than 1 inch deep and shall extend not more than ⅛ inch below rim of hub. No paint, varnish, or any other coatings shall be permitted on the jointing material until after the joint has been tested and approved. Lead shall be caulked tight.

(bb) **Threaded Joints—Screwed Joints.** Threaded joints shall conform to American National taper pipe thread, ASA - B2.1 - 1945 or FS GGG - P - 351a. All burrs shall be removed. Pipe ends shall be reamed out to size of bore and chips removed. Pipe joint compound shall be used on male threads only.

(cc) **Wiped Joints.** Joints in lead pipe or fittings, or between lead pipe or fittings and brass or copper pipe, ferrules, solder nipples, or traps, shall be full wiped joints. Wiped joints shall have an exposed surface on each side of the joint not less than ¾ inch, and a minimum thickness at the thickest part of the joint of not less than ⅜ inch. Joints between lead pipe and cast iron, steel, or wrought iron shall be made by means of a caulking ferrule, soldering nipple, or bushing.

(dd) **Soldered or Brazed Joints.** Joints with copper tube with solder joint fittings shall be soldered or brazed. Surfaces to be soldered or brazed shall be thoroughly cleaned. Joints to be soldered shall be properly fluxed with non-corrosive paste type flux. Solder used for joints shall have a nominal composition of 50% tin and 50% lead, or 95% tin and 5% antimony, conforming to ASTM Standard Specification for soft solder metal B32-60T. Joints to be brazed shall be properly fluxed with a flux suitable for brazing material which is used. Brazing material shall conform to ASTM Standard Specification for Brazing Filler Metal B260-52T.

(ee) **Flared Joints.** Flared joints for soft copper water tubing shall be made with fittings meeting approved standards. (See Table 123(c)(3)) The tubing shall be reamed and expanded with proper flaring tools.

(ff) **Hot-poured Joints.** Hot-poured compound for clay or concrete sewer pipe, or other materials, shall not be water absorbent, and when poured against a dry surface shall have a bond of not less than 100 pounds per square inch. All surfaces of the joint shall be clean and dried before pouring. If wet surfaces are unavoidable, a suitable primer shall be applied.

The compound shall not soften sufficiently to destroy the effectiveness of the joint when subjected to a temperature of 160° Fahrenheit nor soluable in any of the waste carried by the drainage system. Approximately 25% of the joint space at the base of the socket shall be filled with jute or hemp. A pouring collar, rope, or other device shall be used to hold the hot compound when pouring. Each joint shall be poured in one operation until the joint is filled. Joints shall not be tested until one hour after pouring.

(gg) **Cold Joint Compound (Tar Base).** Cold joint compound (tar base) for clay and concrete pipe shall not be water absorbent, and shall bond itself to vitrified clay and concrete pipe. Half of the joint must be packed with oakum, and the remainder with cold tar compound.

(hh) **Gasket Type Joints. Resilient Rubber Joints for Clay or Concrete.** Flexible joints between lengths of clay or concrete pipe may be made by using approved resilient or rubber materials, both on the spigot end and in the bell end of the pipe.

(ii) **Cement Mortar Joints.** Except for repairs and connections of existing lines constructed with such joints, cement mortar joints are prohibited. Where permitted, cement mortar joints shall be made in the following manner: A layer of jute or hemp shall be inserted into the base of the annular joint space and packed tightly to prevent mortar from entering the interior of the pipe or fitting. Not more than 25% of the annular space shall be used for jute or hemp. The remaining space shall be filled in one continuous operation with a thoroughly mixed mortar composed of one part cement and two parts sand, with only sufficient water to make the mixture workable by hand. Additional mortar of the same composition shall then be applied to form a one to one slope with the barrel of the pipe. The bell or hub of the pipe shall be left exposed and when necessary the interior of the pipe shall be swabbed to remove any mortar or other material which may have found its way into such pipe.

(jj) **Burned Lead Joints.** Burned (welded) lead joints shall be fused together to form a uniform weld at least as thick as the lead being joined.

(kk) **Asbestos Cement Sewer Pipe Joints.** Joints in asbestos cement pipe shall be made with sleeve couplings of the same composition as the pipe, sealed with rubber rings. Joints between asbestos cement pipe and metal pipe shall be made by means of an adapter coupling caulked as required in MHD 124(a)(2)(aa). No adapted coupling shall be used that does not have a center ridge. Pipe must not be able to pass through the coupling.

(ll) **Mechanical Joints**

(ll-1) **Mechanical Joints for Cast-Iron Water Pipe.** Mechanical joints in cast-iron water pipe shall be made by means of a flanged collar and rubber ring gasket, secured by the use of an adequate number of

steel bolts. The rubber sealing ring shall conform to A.S.A. A21-Point 11 Requirements.

(ll-2) **Mechanical Joints in Cast-Iron Soil Pipe.** Mechanical joints in cast-iron soil pipe shall be made by means of a preformed molded rubber ring, secured by pulling the pipe and fittings together in such a way as to compress the molded rubber ring in a manner that will assure a gas and water tight joint. The rubber sealing ring shall conform to A.S.T.M. 564-65 requirements.

(ll-3) **Mechanical Joints in Chemical Waste Pipe.** Mechanical joints in chemical waste pipe, of prestressed, low-expansion borosilicate glass pipe and high silicon content cast-iron pipe, shall be joined by means of a stainless steel corrosion resistant clamp assembly, or a clamp assembly utilizing a fiberglass reinforced nylon shell surrounding a sealing sleeve of an elastomeric material containing an approved acid and corrosion resistant seal ring or gasket in such a manner that the sleeve and ring seal or gasket are firmly compressed by the tightening device in order that a gas and water tight joint is provided. The sleeves or bands for this type joint shall be marked with the words "All Stainless", or the recognized abbreviation therefore, and marked with the pipe size for which its use is intended. Fiberglass reinforced shells must bear the manufacturer name. The sleeve must be used as factory assembled. During installation assembly, the pipe or fittings must be inserted into the sleeve so as to be firmly seated against the center rib or shoulder of the gasket, and on all field cut lengths the ends must be as square and smooth as possible. *(Amended 6-26-72)*

(ll-4) **Mechanical Joints in Hubless Cast Iron Soil Pipe.** Mechanical joints for hubless cast iron soil pipe and fittings shall be made by using a neoprene sleeve and stainless steel retaining band as specified in CISPI standard 301. *(Amended 6-26-72)*

(ll-5) **Mechanical Pipe Couplings and Fittings.** Couplings shall be made with the housing fabricated in two or more parts of malleable iron castings in accordance with Federal Specification QQ-I-666c, Grand 11, or with ASTM A47 or ASTM A339. The coupling gasket shall be molded synthetic rubber, per ASTM D-735-61, Grade No. R615BZ. Coupling bolts shall be oval neck track head type with hexagonal heavy nuts, per ASTM-A-183-60, or ASTM A325.

Pipe fittings used with these pipe couplings shall be fabricated or malleable iron castings in accordance with Federal Specifications QQ-I-666c, Grade 11, or with ASTM A47; ductile iron ASTM A339; segweld steel ASTM53 or A106.

These couplings and fittings may be used above ground, for storm drains and leaders and for water distribution pipe provided exposed parts in contact with water are galvanized. *(Amended 6-26-72)*

(mm) **Plastic Joints.** Every joint in plastic piping shall be made with approved fittings by either solvent welded or fusion welded connections or with approved insert fittings and metal clamps and screws of corrosion resistant material or threaded joints according to accepted standards. All solvent materials must meet approved recognized standards.

(nn) **Bituminized Fiber Drain Pipe Joints.** Pipe and bends shall be provided with accurately machined or molded tapered joints, and a taper-

sleeve coupling shall be provided for each length of pipe and for each bend. The slope of the taper in both pipe and coupling shall be 2°. *(Amended 6-26-72)*

(3) **Use of Joints**

(aa) **Clay Sewer Pipe.** Joints in clay sewer pipe, or between such pipe and metal pipe shall be made as provided in MHD 124(a)(2)(ff),(gg), (hh), and (ii).

(bb) **Concrete Sewer Pipe.** Joints in concrete sewer pipe, or between pipe and metal pipe, shall be made by means as provided in MHD 124(a)(2)(ff),(gg),(hh) and (ii).

(cc) **Cast-Iron Pipe.** Joints in cast-iron shall be either caulked or screwed, as provided in MHD 124(a)(2)(aa),(bb), and (cc).

(dd) **Cast-Iron Soil Pipe.** Joints in cast-iron soil pipe may be made by means as provided in MHD 124(a)(2)(aa) or (ll-2).

(ee) **Threaded Pipe to Cast-Iron.** Every joint between wrought iron, steel, brass, copper and cast-iron pipe shall be either caulked or threaded joints as provided in MHD 124(a)(2)(aa),(bb) and (cc) and shall be made with approved adapter fittings.

(ff) **Lead to Cast-Iron, Wrought Iron and Steel.** Joints between lead and cast-iron, wrought iron, or steel shall be made by means of wiped joints to a caulking ferrule, soldering nipple or bushing as provided in MHD 124(a)(2)(cc).

(gg) **Copper Water Tube.** Joints in copper water tubing shall be made either by the appropriate use of approved brass or wrought copper water fittings properly soldered or brazed, or by means of approved flared fittings as provided in MHD 124(a)(2)(ee).

(hh) **Plastic Pipe Joints.** Joints in plastic pipe or between plastic and cast-iron, steel, brass or copper pipe shall be made as provided in MHD 124(a)(2)(mm).

(ii) **Bituminized Fiber Pipe Joints.** Joints in bituminized fiber pipe shall be made as provided for in MHD 124(a)(2)(nn). *(Amended 6-26-72)*

(4) **Special Joints**

(aa) **Copper Tubing to Threaded Pipe Joints.** Joints from copper tubing to threaded pipe shall be made by the use of brass or copper adapter fittings. The joint between the copper pipe and fitting shall be properly soldered, brazed or flared.

(bb) **Cast-Iron to Copper Tube.** Caulked joints between copper tubing and cast-iron soil pipe shall be made by means of brass or copper ferrules or other approved adapter fittings.

(cc) **Slip Joints.** In drainage piping, slip joints shall be used only on the inlet side of the trap or in the trap seal. Every slip joint shall be made using approved packings of gasket material or approved ground joint brass compression rings. Ground faced connections which allow

adjustments of tubing but provide a durable rigid joint when made up shall not be considered as a slip joint.

(dd) **Expansion Joints.** Every expansion joint shall be of an approved type and the material used in its manufacture shall be compatible with the type of piping in which it is installed. Every expansion joint, other than an expansion loop, shall be accessible. (Also see MHD 133(i))

(ee) **Bituminized Fiber to Other Types of Pipe.** When connecting bituminized fiber pipe to other types of materials, only approved types of fittings and adaptors designed for the specific transition intended shall be used. *(Amended 6-26-72)*

(5) **Flanged Fixture Connections.** Fixture connections between drainage pipes and water closets, pedestal urinals, and earthenware trap standards shall be made by means of brass, plastic, or iron flanges, caulked, soldered, solvent welded, or screwed to the drainage pipe. The connection shall be bolted, with an approved gasket, washer or setting compound between the earthenware and the connection. Floor flanges of other equivalent materials may be used when approved by the Administrative Authority.

The bottom of the floor flange shall be set on the top of the finished floor or on a structurally firm base. Closet bends or stubs must be cut off so as to present a smooth surface, even with the top of the closet flange. Use of commercial putty or plastic as fixture setting compound is prohibited.

(6) **Prohibited Joints and Connections.** See MHD 131(b)(3).

(7) **Increasers and Reducers.** Brass or cast-iron body cleanouts shall not be used as a reducer or adapter from cast-iron soil pipe to steel or wrought iron pipe. Where different sizes of pipe or pipes and fittings are to be connected, the proper size increasers, reducers, or reducing fittings shall be used between the two sizes. Hexagon screwed bushings shall not be used in drainage piping.

MHD 125 Traps and Clean Outs

* * * * *

(b) **Drainage Pipe Cleanouts**

(1) **Location.** There shall be at least 2 cleanouts in the building drain, one at or near the base of the stack and one near the connection between the building drain and the building sewer. The cleanout at the outside wall may be inside or outside the building, and shall be made with a full "Y" branch fitting and shall extend at least 2 inches above grade or finished floor, except that the Administrative Authority may grant permission to use a flush cover in traffic areas.

A cleanout which is easily accessible shall be provided at or near the foot of each vertical soil or waste stack.

Each horizontal branch drain pipe shall be provided with a cleanout at its upper terminal, except that a fixture trap or a fixture with an integral trap, readily removable without disturbing concealed piping, may be accepted as a cleanout equivalent for this purpose.

(2) **Size of Cleanouts.** The cleanout shall be of the same nominal size as the pipes they serve up to 4 inches in diameter and not less than 4 inches for larger piping.

The distance between cleanouts in horizontal piping shall not exceed 50 feet for 3 inch or less in size and not over 100 feet for 4 inch and over in size.

(3) **Cleanout Materials.** The bodies of cleanout ferrules shall be made to standard pipe sizes, conform in thickness to that required for pipe and fittings of the same material and extend not less than ¼ inch above the hub. The cleanout cover or plug shall be of brass, cast-iron or approved plastic and be provided with a raised nut or recessed socket for removal.

Cleanouts for cast-iron soil pipe shall have cleanout covers made of brass and conform to specifications and details as shown in Figure 125(b)(3). Appendix B.

(4) **Cleanouts to be Accessible.** Each cleanout, unless installed under an approved cover plate or left flush with the finished floor, shall be at least 2 inches above grade, readily accessible and shall not be covered with cement, plaster, or other permanent finish material. Where a soil stack cleanout is located within 10 feet of where the building drain leaves the building, the cleanout at the outside wall may be eliminated.

MHD 131 Drainage Systems

(a) Determining Size of Drainage System

(1) Load on Drainage Piping. The load on drainage system piping shall be computed in terms of drainage fixture units in accordance with Table 131(a)(1) and MHD 131(a)(1)(aa), except the Administrative Authority may allow variations where it is shown by a hydraulic analysis of the piping system, submitted to the Administrative Authority, that such variation would result in a more desirable flow rate in the piping system.

TABLE 131 (a) (1)

FIXTURE UNIT VALUES FOR VARIOUS PLUMBING FIXTURES

Type of Fixture	Fixture Unit Value	Minimum Fixture Trap and drain size
Clothes Washer (Domestic Use)	2	1½
Clothes Washer (Public Use in Groups of 8 or more)	6 each	
Bath tub with or without shower	2	1½
Bidet	2	1½
Dental unit or cuspidor	1	1¼
Drinking Fountain	1	1¼
Dishwasher, Domestic	2	1½
Dishwasher, Commercial	4	2
Floor Drain with 2 inch waste	2	2
Floor drain with 3 inch waste	3	3
Floor Drain with 4 inch waste	4	4
Lavatory	1	1¼
Laundry Tray (1 or 2 Compartment)	2	1½
Shower Stall, Domestic	2	1½
Shower (Gang) per head	1	
SINKS:		
Combination, Sink and Tray (with disposal unit)	3	1½
Combination, Sink and Tray (with one trap)	2	1½
Domestic	2	1½
Domestic, with disposal unit	2	1½
Surgeons	3	1½
Laboratory	1	1½
Flushrim or Bedpan washer	6	3
Service	3	2
Pot or Scullery	4	2
Soda Fountain	2	1½
Commercial, Flat Rim, Bar or Counter	3	1½
Wash, Circular or Multiple (per set of faucets)	2	1½
URINAL Pedestal, Wall Hung, with 3 inch trap (Blowout and Syphon Jet)	6	3
Wall Hung with 2 inch trap	3	2
Wall Hung with 1½ inch trap	2	1½
Trough (per 6 foot section)	2	1½
Stall	3	2
WATER CLOSET	6	3
Unlisted Fixture or Trap Size		
1¼ inch	1	
1½ inch	2	
2 inch	3	
2½ inch	4	
3 inch	5	
4 inch	6	

(aa) **Values for Continuous Flow.** Fixture unit values for continuous or semi-continuous flow into the drainage system, such as from a pump, sump ejector, air conditioning equipment, or similar device shall be computed on the basis of one fixture unit for each gallon per minute flow.

(2) **Selecting Size of Drainage Piping.** Pipe sizes shall be determined from Table 131(a)(2)A and Table 131(a)(2)B on the basis of drainage load computed from Table 131(a)(1) and MHD 131(a)(1)(aa).

TABLE 131 (a) (2)A

MAXIMUM LOADS FOR HORIZONTAL DRAINS IN FIXTURE UNITS

Diameter of Drain	Horizontal Fixture Branch*- ¼ in/ft.	Building Sewer, Building Drain and Building Drain Branches-from Stacks**** Slope			
		1/16 in/ft.	⅛ in/ft.	¼ in/ft.	½ in/ft.
(inches)	(f.u.)	(f.u.)	(f.u.)	(f.u.)	(f.u.)
1¼	1				
1½	3			21	26
2	6			24	31
2½	12		36***	42***	50***
3**	32***		180	216	250
4	160		390	480	575
5	360		700	840	1,000
6	620	1,400	1,600	1,920	2,300
8	—	2,500	2,900	3,500	4,200
10	—	3,900	4,600	5,600	6,700
12	—	7,000	8,300	10,000	12,000
15	—				

*Includes Horizontal Branches of the Building Drain.
**No water closet shall discharge into a drain less than 3 inch.
***Not over 2 Water Closets.
****Every building drain that receives the discharge of (3) or more water closets, shall not be less than 4 inch in diameter. *(Amended 7-26-73)*

(3) **Minimum Size of Soil and Waste Stacks.** No soil or waste stack shall be smaller than the largest horizontal branch connected thereto except that a 4x3 water closet connection shall not be considered as a reduction in pipe size.

(4) **Minimum Size of Stack Vent or Vent Stack.** Any structure in which a building drain is installed shall have at least one stack vent or vent stack carried full size through the roof not less than 3 inches in diameter. Where one or more soil stacks are required to extend through the roof undiminished in size they should be the stack or stacks most remote from the location where the building drain leaves the building. When a soil or waste stack receives the discharge of fixtures located on 2 or more floors, and the uppermost fixture is located 3 or more floors above the building drain, such stack and stack vent shall continue undiminished in size through the roof. *(Amended 4-5-73)*

(5) **Provision for Future Fixtures.** When provision is made for future installation of fixtures, those provided for shall be considered in determining the required sizes of drain and vent pipes. Construction to provide for such future installations shall be terminated with a plugged fitting or fittings.

TABLE 131 (a) (2)B

MAXIMUM LOADS FOR SOIL AND WASTE STACKS IN FIXTURE UNITS

Diameter of Stack	Stacks of not more than 3 stories or Branch Intervals	Stacks of more than 3 stories or Branch Intervals	Total at One Story or Branch Interval
1¼*	2	2	1
1½*	4	4	2
2*	9	18	6
2½*	20	42	9
3	36***	72***	24**
4	240	500	90
5	540	1,100	200
6	960	1,900	350
8	—	3,600	600
10	—	5,600	1,000
12	—	8,400	1,500

*No water closets permitted.
**Not over 2 water closets permitted.
***Not over 6 water closets permitted, and not over 6 branch intervals on a 3 inch soil stack.

(Amended 12-26-72)

(6) **Minimum Size of Underground Drainage Piping.** No portion of the drainage system installed underground shall be less than 2 inches in diameter.

(7) **Sizing of Offsets on Drainage Piping**

(aa) **Offsets of 45 Degrees or Less.** An offset in a vertical stack with a change of direction of 45° or less from the vertical, may be sized as a straight vertical stack.

(bb) **Offsets of more than 45 Degrees.** A stack with an offset of more than 45 degrees from the vertical shall be sized as follows:

The portion of the stack above the offset shall be sized as for a regular stack based on the total number of fixture units above the offset.

The offset shall be sized as for a building drain branch. Table 131(a)(2)A Maximum Loads for Horizontal Drains.

The portion of the stack below the offset shall be sized at least as large as the offset. *(Amended 4-5-73)*

(cc) **Above Highest Branch.** An offset above the highest branch connection is an offset in the stack vent and shall be considered only as it affects the developed length of the vent.

(dd) **Below Lowest Branch.** In the case of an offset in a soil or waste stack below the lowest branch connection, there shall be no change in diameter required if the offset is made at an angle of not greater than 45 degrees from the vertical.

If such offset is made at an angle of greater than 45 degrees from the vertical, the required diameter of the offset and the stack below it shall be sized as for a building drain. (Table 131(a)(2)A)

(8) **Fixture Connections to an Offset of More than 45° or at Base of Stack.** When stacks in buildings of 5 or more stories in height receive the discharge of fixtures 4 or more stories above the offset, no fixtures on the floor at which the offset occurs shall be connected to the stack within 8 feet of the base of the offset measured vertically or horizontally. Said fixtures may also be connected into vertical section of the stack more than 2 feet below the offset. Fixture connections to horizontal piping at the bases of such stacks shall be made in the same manner, or at a point acceptable to the Administrative authority.

(b) **Drainage Piping Installation**

(1) **Pitch or Horizontal Drainage Piping.** Horizontal drainage piping shall be installed in uniform alignment at uniform slopes in accordance with the following requirements and in no case at a slope which will produce a computed velocity of less than 2 feet per second, unless otherwise permitted by the Administrative Authority, based on hydraulic analysis of the piping system.

Size of Piping	Minimum Slope
Less than 3 inches	1/4 inch per foot
3 inches to 6 inches	1/8 inch per foot
8 inches and over	1/16 inch per foot

(2) **Change in Direction.** Changes in direction in drainage piping shall be made by the appropriate use of 45 degree wyes, long or short sweep quarter bends, sixth, eighth, or sixteenth bends, or by combination of these or equivalent fittings. Single and double sanitary tees, quarter bends, and long turn ells may be used in drainage lines only where the direction of the flow is from the horizontal to the vertical.

(aa) **Short Sweeps Permitted.** Short sweep bends or long turn ells 3 inch or larger in diameter may be used in soil or waste lines where the change in direction of flow is from either the horizontal to the vertical or from the vertical to the horizontal.

(3) **Prohibited Fittings and Connections.** No fittings having a hub in the direction opposite to flow, or straight tee branch shall be used as a drainage fitting. No fitting or connection which has an enlargement chamber or recess with a ledge or shoulder, or reduction in pipe area shall be used. No drainage or vent piping shall be drilled, tapped, or welded unless otherwise permitted by the Administrative Authority. Fittings used for back-to-back, wall outlet, blowout type water closet bowls shall have a baffle plate or other device to prevent the waste water from one water closet from entering the opposite water closet. No fixture connection shall be made to a closet bend. No running threads, bands, or saddles shall be used. The short pattern fitting in a horizontal position is prohibited in underground work.

(aa) **Heel or Side-Inlet Bends.** A heel or side-inlet quarter bend shall not be used as a vent when the inlet is placed in a horizontal position or any similar arrangement of pipe or fittings producing a similar effect.

(bb) **Obstruction to Flow.** No fitting, connection, device or method of installation which obstructs or retards the flow of water, wastes, sewage, or air in the drainage or venting system in an amount greater than the normal frictional resistance to flow, shall be used unless it is indicated as acceptable to this Code by having a desirable and acceptable function and as of ultimate benefit to the proper and continuing functioning of the plumb-

ing system. The enlargement of a 3 inch closet bend or stub to 4 inches shall not be considered an obstruction, provided the horizontal flow line or insert is continuous without forming a ledge.

(4) **Dead Ends.** In the installation of a drainage system, dead ends shall be avoided except where necessary to extend piping for a cleanout so as to be accessible.

(5) **Building Drains Below Building Sewer.** Building drains which cannot be discharged to the sewer by gravity flow shall discharge into an approved watertight, gas tight vented sump or receiving tank, so located as to receive the sewage or wastes by gravity. From such sump or receiving tank the sewage or other liquid wastes shall be lifted and discharged into the building gravity drain by approved automatic pumping equipment. The system or drainage piping entering such sump shall be installed and vented as required in this section for a gravity system.

(aa) **Design of Sumps**

(aa1) Sumps and receiving tanks shall be constructed of poured concrete, metal, or other approved materials. If constructed of poured concrete, the walls and bottom shall be adequately reinforced and designed to acceptable standards. Metal sumps or tanks shall be of such thickness as to serve their intended purpose and shall be treated internally and externally to resist corrosion.

(aa2) The discharge line from such pumping equipment shall be provided with an accessible back-water valve and gate valve, and if the gravity drainage line to which such discharge line connects is horizontal, the method of connection shall be from the top through a wye branch fitting. The minimum size of any pump or discharge pipe from a sump having a water closet connected thereto shall not be less than 2 inches.

(aa3) Building drains or building sewers receiving discharge from any pumping equipment shall be adequately sized to prevent over-loading. In all buildings, other than single and 2 family dwellings, should 3 or more water closets discharge into the sump, duplicate pumping equipment shall be installed.

(aa4) Sumps and receiving tanks shall be provided with gastight metal covers, except that float control or switch rods shall operate without binding. Such cover shall be of a bolt and gasket type or equivalent manhole opening to permit access for inspection, repairs, and cleaning.

(bb) **Sump Vent.** The top of the sump tank shall be provided with a vent pipe which shall extend separately through the roof, or may be combined with other vent pipes. Such vent shall be large enough to maintain atmospheric pressure within the sump under all normal operating conditions and in no case less than in accordance with the number of fixture units discharging into the sump. When the foregoing requirements are met and the vent after leaving the sump, is combined with vents from fixtures discharging into the sump, the size of the combined vent need not exceed that required for the total number of fixtures discharging into the sump. No vent from an air operated sewage ejector shall combine with other vents.

(cc) **Clear Water Sumps.** Sumps and receiving tanks which receive only clear water drainage, and from which sewage is excluded, need not be air tight or vented.

MHD 134 Inspection, Tests and Maintenance

(a) **Inspections.** New plumbing systems and parts of existing systems which have been altered, extended or repaired shall be inspected and tested by the proper Administrative Authority to insure compliance with all the requirements of this Code and the installation and construction of the system in accordance with the approved plan and the permit, except that testing may be waived for work which does not include addition to, replacement, alteration, or relocation of any water supply, drainage or vent piping.

All the piping shall be tested and after the plumbing fixtures have been set, and before the system is put into use, the system shall be given a final inspection and test by the proper Administrative Authority.

(b) **Notifications**

(1) It shall be the duty of the plumbing contractor to notify the proper Administrative Authority and the Owner, or his authorized agent orally, by telephone, or in writing, not less than eight working hours between the hours of 8 a.m. and 4 p.m. before the work is to be inspected or tested.

(2) It shall be the duty of the plumbing contractor to make sure that the work will stand the test prescribed before giving the above notification.

(3) If the proper Administrative Authority finds that the work will not stand the test, the plumbing contractor shall be required to renotify as above.

(4) If the proper Administrative Authority does not appear for an inspection within 24 hours of the time set, excluding Saturdays, Sundays and Holidays, the inspection or test shall be deemed to have been made, and the plumbing contractor is required to file an affidavit with the proper Administrative Authority that the work was installed in accordance with the Code, the approved plans and permit, and that it was free from defects and that the required tests had been made and the system found free from leaks; also whether the owner or his authorized agent was present when such inspection or test was made.

(c) **Material and Labor for Tests.** The equipment, material, power, and labor necessary for the inspection and test shall be furnished by the plumbing contractor.

(d) **Method of Testing.** The air tests shall be applied to the plumbing drainage system in its entirety or in sections. Sections which are found satisfactory need not be retested after completion of the entire system unless considered necessary by the proper Administrative Authority.

(1) **Rough Plumbing.** Except for outside leaders and perforated or open drain tile, the piping of plumbing drainage and venting systems shall be air tested upon completion of the rough piping.

(aa) The air test shall be made by attaching the air compressor or testing apparatus to any suitable opening and closing all other inlets and outlets to the system by means of proper testing plugs. Plaster paris shall not be used in roof terminals.

(bb) Air shall be forced into the system until there is a uniform pressure of 5 pounds per square inch on the portion of the system being tested. The pressure shall remain constant for 15 minutes without the addition of air.

(2) **Finished Plumbing.** After the plumbing fixtures have been set and their traps filled with water, their connections shall be tested and proven gas and water tight by plugging the stack openings on the roof and the building drain where it leaves the building, and air introduced into the system equal to the pressure of a one inch water column. Such pressure shall remain constant for the period of inspection without the introduction of additional air.

(e) **Covering of Work.** No building drainage or plumbing system or part thereof shall be covered until it has been inspected, tested, and approved as herein prescribed.

(f) **Uncovering of Work.** If any building drainage or plumbing system or part thereof is covered before being regularly inspected, tested, and approved, as herein prescribed, it shall be uncovered upon the direction of the proper Administrative Authority.

(g) **Defective Work.** If the inspection or test shows defects, such defective work or material shall be replaced and the inspection and test repeated.

(h) **Building Sewer.** The building sewer shall be inspected by the proper Administrative Authority to insure compliance with the provisions of the Code.

* * * * *

(k) **Certificate of Approval.** Upon the satisfactory completion and final inspection of the plumbing system, a certificate of approval shall be issued by the proper Administrative Authority.

(l) **Air Test of Defective Plumbing.** The air test shall be used in testing the sanitary condition of the drainage or plumbing system of all buildings where there is reason to believe that it has become defective. In buildings condemned by the proper Administrative Authority because of insanitary conditions of the plumbing system, the alterations in such system shall not be considered as repairs, but as new plumbing.

Where buildings are moved from one location to another, or raised for foundations, or where part of the plumbing system has been damaged by fire, storm, or other means, a final air test shall be applied and shall hold tight, if in the opinion of the Administrative Authority it is warranted in order to assure a sanitary plumbing system.

* * * * *

(n) **Defective Fixtures.** All installed fixtures found defective or in an insanitary condition shall be repaired, replaced, or removed upon written notice from the proper Administrative Authorities.

(o) **Maintenance.** The plumbing system of every building shall be maintained in a sanitary and safe operating condition.

APPENDIX D

WATER WELL CONSTRUCTION CODE

MHD 217 Location of Wells

* * * * *

(c) Distance from Pollution or Contamination Sources

(1) A well shall be at least:

* * * * *

(dd) Fifty feet (50 ft.) from a buried sewer, septic tank, subsurface disposal field, grave, animal or poultry yard or building, privy, petroleum storage tank, or any other sewage or liquid wastes that may drain into the soil.

(ee) Twenty feet (20 ft.) from a buried sewer constructed of cast iron pipe with tested watertight joints or other material acceptable to the Board; or a pit or unfilled space below ground surface, except an approved basement.

(ff) Wells less than 50 feet in depth and not encountering at least 10 feet of impervious material shall be located at least 150 feet from cesspools, leaching pits, or dry wells and at least 100 feet from a subsurface disposal field, manure storage pile or other source of contamination.[2]

* * * * *

APPENDIX E

Cons 72 Sanitary Provisions

* * * * *

(b) SEWAGE AND WASTE DISPOSAL

* * * * *

(4) Septic tank and soil absorption systems shall be set back from the normal high water mark in accordance with class of public waters:

(aa) On Natural Environment Lakes and Streams, at least 150 feet;

(bb) On Recreational Development Lakes, at least 75 feet;

(cc) On General Development Lakes and Streams, at least 50 feet.

* * * * *

* * * * *

(d) SANITARY PROVISIONS

(1) The sanitary provision standards set forth in Minn. Regs. Cons. 72 of the Statewide Standards and Criteria for Management of Shoreland Areas of Minnesota shall apply to Wild, Scenic and Recreational river land use districts.

(2) However, the provisions of Cons. 72 (b) (4) are superseded by the following setback provisions for septic tank and soil absorption systems.

	Setback from the normal high water mark
Wild River	150 feet
Scenic River	100 feet
Recreational River	75 feet
Tributaries	75 feet

* * * * *

NR 83 LAND USE CONTROL PROVISIONS

* * * * *

(d) Sanitary Provisions

* * * * *

(1) Water Supply

* * * * *

(dd) Septic tank and soil absorption systems shall be set back from the ordinary high water mark in accordance with the class of public waters:

(i) On Natural Environment Waters, at least 150 feet;

(ii) On Recreational Development Waters, at least 75 feet; and

(iii) On General Development Waters, at least 50 feet.

* * * * *

Pleading File

CERTIFICATE OF BOARD'S
AUTHORIZING RESOLUTION

I, Sandra S. Gardebring, do certify that I am the Executive Director of the Minnesota Pollution Control Agency, an Agency duly authorized under the laws of the State of Minnesota, and that a resolution was adopted at the meeting of the Agency properly called on the 25th day of April, 1978; that a quorum was present at said meeting; that the resolution has not been rescinded or modified; and that the resolution provided:

BE IT RESOLVED, that the Board hereby approves and adopts the Staff's proposed Findings of Fact and Conclusions in the matter of the proposed adoption of Minn. Reg. WPC 40 setting forth individual sewage treatment systems standards and hereby approves and adopts Minn. Reg. WPC 40, Individual Sewage Treatment Systems Standards, as amended by the Staff's proposed Order Adopting Rules; and

BE IT FURTHER RESOLVED, that Joseph F. Grinnell, Chairman of the Agency, and Sandra S. Gardebring, Executive Director, be and are hereby authorized to sign the attached Findings of Fact and Conclusions and Order Adopting Rules in the matter of Minn. Reg. WPC 40; and

BE IT FURTHER RESOLVED, that the Board requests the Executive Director to work urgently with the Health Department regarding the Board's concern over the unresolved problem of the setback requirement and regulations applicable to that and to report back to the Board not later than the second succeeding regular monthly meeting; and

BE IT FURTHER RESOLVED, that the Board expresses its determination and conviction that the setback problem must be addressed in some fashion and not left unresolved.

IN WITNESS WHEREOF, I have hereunto subscribed my name this 3rd day of May, 1978.

Sandra S. Gardebring
Executive Director

Subscribed and sworn to
before me this 3rd day
of May, 1978:

Mary E. Wyatt
Notary Public

MARY E. WYATT
NOTARY PUBLIC-MINNESOTA
RAMSEY COUNTY
My Comm. Expires Oct. 24, 1983

STATE OF MINNESOTA

COUNTY OF RAMSEY

MINNESOTA POLLUTION

CONTROL AGENCY

In the Matter of the Proposed
Adoption of Minn. Reg. WPC 40
Setting Forth Individual Sewage
Treatment Systems Standards

NO. PCA-78-004-WS

ORDER ADOPTING RULES

The above-entitled matter came on for hearing before William Seltzer, Hearing Examiner, on the 7th day of November, 1977, at the Board Room of the Minnesota Pollution Control Agency, 1935 W. County Road B2, Roseville, Minnesota, commencing at 9:00 a.m., after proper notice required by Minn. Stat. §15.0412 (1976) was served on all persons, associations, and other interested groups registered with the Secretary of State for that purpose. Said hearing was duly recessed and reconvened at the following times at the following locations: Room 158 of the Student Center, Southwest State University, North Highway 23, Marshall, Minnesota, on November 10, 1977, commencing at 7:00 p.m.; the Crow Wing County Service Building, Brainerd, Minnesota, on November 14, 1977, commencing at 7:00 p.m.; Room 176 of the Messabi Community College, 9th Avenue & West Chestnut, Virginia, Minnesota, on November 15, 1977, commencing at 7:00 p.m.; the Beaux Arts Ballroom of Bemidji State University, 14th Street & Birchmont Drive, Bemidji, Minnesota, on November 16, 1977, commencing at 7:00 p.m.; Room S-209 of the Fergus Falls Community College, Highway 210 West, Fergus Falls, Minnesota, on November 17, 1977, commencing at 7:00 p.m.; and the Theater at Rochester Community College, East Highway 14, Rochester, Minnesota, on November 21, 1977, commencing at 7:00 p.m.

After affording interested persons an opportunity to present written and oral data, statements and arguments, having considered all of the evidence adduced and upon the records, files and proceedings herein, and applicable standards or criteria, and having confirmed the need for the above-captioned rules,

NOW, THEREFORE, IT IS ORDERED that, pursuant to authority vested in this Agency by Minn. Stat. §115.03 subd. 1(e)(1976), Minn. Reg. WPC 40, entitled "Individual Sewage Treatment Systems Standards," is adopted this 25th day of April, 1978, in the form published in 1 State Register 710 (October 3, 1977), with the following amendments:

WPC 40 Individual sewage treatment systems standards.

B. Definitions. For the purposes of these standards, certain terms or words used herein shall be interpreted as follows, the word "shall" is mandatory, the words "should" and "may" are permissive. All distances, unless otherwise specified, shall be measured horizontally.

27. Plastic limit. A soil moisture content below which the soil may be manipulated for purposes of installing a soil treatment system, and above which manipulation will cause compaction and ~~pudding~~ puddling.

29. Seepage pit. (or leaching pit or dry well) An underground pit into which a sewage tank discharges ~~sewage~~ effluent or other liquid waste and from which the liquid seeps into the surrounding soil through the bottom and openings in the side of the pit.

C. General provisions.

1. Applicability.

a. Administration by state agencies.

(1) Individual sewage treatment systems which serve a single facility generating greater than 15,000 gallons per day shall conform to the requirements of these standards and shall make application for and obtain a State Disposal System Permit from the Agency.

(2) Collector systems which serve 15 dwellings or 5,000 gallons per day, whichever is less, shall conform to the requirements of these standards and shall make application for and obtain a State Disposal System Permit from the Agency.

E. Building sewers.

~~1.--The-building-sewer,-and-all-piping-up-to-the-point-where the-soil-treatment-area-begins,-shall-be-of-watertight-piping-and joints.--Joints-between-this-piping-and-other-appurtenances-of-the system-shall-be-watertight.--The-use-of-perforated-pipe-or-its equivalent-is-prohibited.~~

~~2.--No-building-sewer-shall-be-less-than-four-inches-in diameter.~~

~~3.--The-buried-or-concealed-portion-of-any-building-sewer, building-drain-or-branch-thereof-shall-be-located-at-least-20-feet from-any-well.--That-portion-located-less-than-50-feet-from-any-well shall-be-constructed-of-cast-iron-with-air-tested-joints.--The-air test-should-be-made-by-attaching-an-air-compressor-or-test-apparatus to-a-suitable-opening-and-closing-all-other-inlets-and-outlets-to-the~~

~~sewer-and/or-drain-under-test-by-means-of-proper-testing-plugs. Air-shall-be-forced-into-the-system-until-there-is-uniform-pressure of-five-pounds-per-square-inch-in-the-section-being-tested.--The system-shall-be-considered-satisfactorily-air-tested-if-the-pressure therein-remains-constant-for-15-minutes-without-the-addition-of-air.~~

~~4.--The-portions-of-any-buried-sewer-more-than-50-feet-from a-well-shall-be-constructed-of-cast-iron,-vitrified-clay,-cement asbestos,-concrete-or-other-approved-pipe-material.~~

~~5.--All-joints-between-pipes-and-fittings-in-the-building sewer-shall-have-watertight-and-root-tight-joints.--Portland-cement mortar-joints-shall-not-be-allowed.--Lines-shall-provide-a-grade of-not-less-than-one-eighth-inch-per-foot.--Where-building-sewers exceed-50-feet-in-length,-lines-shall-provide-a-grade-which-will allow-a-flow-velocity-of-not-less-than-two-feet-per-second.--All changes-of-grade-shall-be-by-means-of-long-sweep-ells.--Where-long sweep-ells-are-not-used-and-where-the-direction-changes-by-more-than 22--1/2-degrees,-accessible-cleanouts-shall-be-provided.~~

The design, construction, and location of, and the materials for use in building sewers are presently governed by the Minnesota Building Code which, in Minn. Reg. SBC 8701, incorporates by reference the Minnesota Plumbing Code, Minn. Reg. MHD 120-135, and by specific provisions of the Minnesota Water Well Construction Code, Minn. Reg. MHD 217(c)(1)(dd), (ee) and (ff). Relevant portions of the Minnesota Plumbing Code, as of the date of enactment of this rule, are reproduced in Appendix C. Minn. Reg. MHD 217(c)(1)(dd), (ee) and (ff), as of the date of enactment of this rule, is reproduced in Appendix D.

G. Distribution and dosing of effluent.

1. Distribution.

b. Pressure distribution.

(4) Laterals shall be connected to a header pipe which is at least one and one-half inch and no more than two inches in diameter.

Table I

Maximum Allowable Lateral Lengths in Feet From Header Pipe

Perf. Dia.	Perforation Spacing 2.5 Feet Pipe Dia.			3.0 Feet Pipe Dia.		
	1"	1 1/4"	1 1/2"	1"	1 1/4"	1 1/2"
3/16"	34	52	70	36	60	75
7/32"	30	45	57	33	51	63
1/4"	25	38	50	27	42	54

2. Dosing. A dosing device is not necessary in all situations but, where used, shall comply with the following requirements.

b. Dosing devices for gravity distribution.

(1) Where a dosing device is employed, ~~A~~ a pump or siphon shall deliver the dose to the soil treatment unit for gravity distribution over the soil treatment area.

c. Dosing devices for pressure distribution.

(2) The pump discharge capacity shall be at least ~~30~~ seven and one-half gallons per minute for ~~a-three-bedroom-or smaller-dwelling-and-an-additional-ten-gallons-per-minute-for-each~~

~~bedroom above three. For other establishments, the pump discharge shall be ten gallons per minute for each 200 gallons per day of sewage flow or 30 gallons per minute, whichever is greater.~~ each 100 square feet of soil treatment area.

(4) The quantity of effluent delivered for each pump cycle shall be ~~equal to~~ no greater than 25 percent of one day's sewage flow ~~or 200 gallons, whichever is greater.~~

H. Final treatment and disposal.

2. Standard system.

a. Sizing.

(1) The required soil treatment area shall be determined by ~~number of bedrooms (see sections (B)(6) and (C)(2)(e))~~ the daily sewage flow and the percolation rate of the soil. ~~for dwellings, the sum of the areas required for each individual unit for multiple residential units, and by the daily sewage flow for other establishments. See section (b)(33).~~

~~(2) The minimum soil treatment area required for any dwelling shall provide for at least two bedrooms.~~

~~(3)~~ (2) ~~Estimates of~~ Acceptable methods for estimating sewage flow for dwellings are given in Table II. The minimum daily sewage flow estimated for any dwelling shall provide for at least two bedrooms. For multiple residential units, the estimated daily sewage flow shall consist of the sum of the flows of each individual unit.

Table II

Sewage Flow (Gallons Per Day)

Number of Bedrooms	~~Size~~ Classification of Dwelling* I	II	III	IV
2	300	225	180	---
3	450	300	218	---
4	600	375	256	---
5	750	450	294	---
6	900	525	332	---

*Table II is based on the following formulas:

~~Size~~ Classification I: Sewage Flow = 150(# of Bedrooms)

~~Size~~ Classification II: Sewage Flow = 75(# of Bedrooms + 1)

~~Size~~ Classification III: Sewage Flow = 66 + 38(# of Bedrooms + 1)

~~Size~~ Classification IV: ~~(Greywater System):--Sewage Flow = 60% of the average flow~~ If a greywater system is employed pursuant to Appendix A, section (D)(2) estimated sewage flow shall equal 60% of the amount provided in Column I, II, or III of Table II."

(3) For other establishments, the daily sewage flow shall be determined as provided in section (B)(33).

(4) The soil treatment area shall be at least as large as set forth in Table III.

Table III

Percolation Rate (Minutes per inch)	Required Soil Treatment Area in Square Feet (Per Gallon of ~~Waste~~ Sewage Flow per Day)
Faster than 0.1**	---
0.1 to 5***	0.83
6 to 15	1.27
16 to 30	1.67
31 to 45	2.00
46 to 60	2.20
Slower than 60****	---

**Soil is unsuitable for standard system if percolation rate is less than 0.1 minutes per inch. See Appendix A, section (C)(5).

***Consider alternative sewage treatment systems for soils with this percolation rate range. See Appendix A, section (C)(5).

****Soil is unsuitable for standard system if percolation rate is slower than 60 minutes per inch. See Appendix A, section (C)(4).

b. Location.

(1) On slopes in excess of 12 percent, the soil profile shall be carefully evaluated in the location of the proposed soil treatment system and downslope to identify the presence of layers with different permeabilities that may cause sidehill seepage. In no case shall a trench be located within 15 feet of where such a layer ~~surfacing~~ surfaces on the downslope.

c. Design and construction.

(9) Distribution pipes --- gravity distribution.

(c) Agriculture drain tile shall be in 12-inch lengths and laid with ~~one-half~~ one-fourth inch open joints on grade

boards. All open joints shall be protected on top by strips of asphalt-treated building paper at least ten inches long and three to six inches wide or by other acceptable means.

(10) Pressure distribution.

(b) Perforations shall be sized and spaced as shown in Table ~~II~~ I set forth ~~in~~ following section ~~(H)(2)(a)(3).~~ (G)(1)(b)(4).

(12) ~~The~~ Gravity distribution pipes in beds shall be uniformly spaced no more than five feet apart and not more than 30 inches from the side walls of the bed.

d. Dual field.

(3) A part of the soil treatment area shall be used no more than one year unless inspection of the effluent level indicates that a longer duration can be used.

TABLE IV
Minimum Setback Distances (feet)

Feature	Sewage Tank	Soil Treatment Area
Water Supply well less than 50 feet deep and not encountering at least ten feet of impervious material	~~50~~*	~~100~~*
Any other water supply well or buried water suction pipe	~~50~~*	~~50~~*
Buried pipe distributing water under pressure	~~10~~*	~~10~~*
Buildings	10	20
Property Lines	10	10

The Ordinary High Water Mark of:		
Natural Environment Lakes and Rivers	~~150~~**	~~150~~**
Recreational Development Lakes and Streams	~~75~~**	~~75~~**
General Development Lakes and Streams	~~50~~**	~~50~~**
Wild Rivers	~~150~~**	~~150~~**
Scenic Rivers	~~100~~**	~~100~~**
Recreational Rivers and Designated Tributaries of Wild Scenic, and Recreational Rivers	~~75~~**	~~75~~**

* Setbacks from water supply wells and buried water pipes are presently governed by Minn. Reg. MHD 217(c)(1)(dd), (ee) and (ff). These regulations, as of the date of enactment of this rule, are reproduced in Appendix D.

** Setbacks from lakes, rivers and streams are presently governed by Minn. Reg. Cons. 72(b)(4), NR 79(d)(2) and NR 83(d)(2)(dd). These regulations, as of the date of enactment of this rule, are reproduced in Appendix E.

K. Variance. In any cases where a permit is required by the Agency, and upon application of the responsible person or persons, the Agency finds that by reason of exceptional circumstances the strict enforcement of any provision of these standards would cause undue hardship, that disposal of the sewage, industrial waste or other waste is necessary for the public health, safety or welfare, or that strict conformity with the standards would be unreasonable, impractical or not feasible under the circumstances, the Agency in its discretion may permit a variance therefrom upon such conditions as it may prescribe for prevention, control or abatement of pollution in harmony with the general purpose of these standards and the intent of applicable state and federal laws.

Appendix A

Alternative Systems

B. Adoption and use.

1. Where WPC 40 is administered by a local unit of government, those local units of government may adopt this appendix, in whole or in part, as part of a local code or ordinance. Nothing in WPC 40 or this appendix, however, shall require the adoption of any part of this appendix as a local ordinance or code. Further, nothing in WPC 40 or this appendix shall require local units of government to allow the installation of any system in this appendix.

~~2.--Where-these-standards-are-administered-by-the-Agency or-the-Minnesota-Department-of-Health,-these-standards~~ This Appendix defines the minimum requirements for alternative systems~~.~~ serving establishments or facilities licensed or otherwise regulated by the State of Minnesota or this Agency, pursuant to section (C)(1)(a).

C. Class I alternatives --- modified standard systems.

5. Rapidly permeable soils.

a. Filter material for a soil treatment unit ~~using gravity-distribution-of-effluent~~ shall not be placed in contact with original soil having a percolation rate faster than one-tenth minute per inch.

D. Class II alternatives --- reduced area systems.

2. Separate toilet waste and greywater systems.

b. Toilet waste treatment devices.

(2) Type I --- privies.

(h) All liquids and ~~soils~~ solids removed from a vault privy shall be treated and disposed of by application in

accordance with the Agency's septage disposal guidelines.

E. Class III Alternatives --- advanced alternative system.

1. Mounds.

o. Gravity distribution.

(6) The quantity of effluent per pump dose shall be at least ~~150 gallons per bedroom for dwellings. For other establishments the dose shall be at least~~ 25 percent of the estimated or measured daily sewage flow.

p. Pressure distribution.

(1) Perforation holes shall be as set forth in Table I set forth in section (G)(1)(b)(4). Holes shall be drilled straight into the pipe and not at an angle.

2. Collector systems.

b. Design.

(3) Sewers.

(a) Sewer systems shall be designed on an estimated average daily flow for dwellings based on Table II, set forth in section (H)(2)(a)~~(3)~~(2), plus estimated flows from other establishments.

4. Seepage pits.

c. Seepage pits, in addition to the general provisions ~~under section (H)(2)(c)~~ specified in Table IV following section (H)(2)(d)(3), shall be set back not less than the stated minimum distances from the following:

(1) Wells less than 50 feet in depth and not encountering at least 10 feet of impervious material . . . . . 150 ft.

(2) Any water supply well or buried water suction pipe . . . . . 75 ft.

(3) Buildings . . . . . 20 ft.

(4) Property lines and buried pipe distributing water under pressure . . . . . 10 ft.

(5) Other seepage pits . . . three times the diameter of the largest pit (edge to edge)

d. Effective soil treatment area of a seepage pit shall be calculated as the sidewall area below the inlet, exclusive of any hardpan, rock or clay formations. The sidewall area shall be based on the outer diameter of the pit lining plus 12 inches of rock in the annular space.

(1) Required treatment area shall be determined by the percolation test described in section (D) and from Tables II and III, set forth in sections (H)(2)(a)~~(3)~~(2) and (4), with no reduction for increased filter material below or around the pit. In no case shall a seepage pit be installed in soils where the percolation rate of any stratum is faster than one-tenth minute per inch (coarse sand). A percolation test shall be made in each vertical stratum penetrated by the seppage pit, and the weighted average of the results, exclusive of results from soil strata in which the percolation rate is slower than 30 minutes per inch, shall be computed and applied to the seepage bed column of Table III as indicated.

F. Class IV alternatives --- holding tanks.

6. Location. Holding tanks shall be located:

b. As specified for septic tanks in Table ~~I~~ IV, set forth ~~in~~ following section ~~(6)(1)(b)~~ (H)(2)(d)(3).

Figure 7

LAYOUT OF PERFORATED PIPE LATERALS FOR PRESSURE DISTRIBUTION

ALLOWABLE LATERAL LENGTHS IN FEET

PERF. DIA.	PIPE DIA.		
	1"	1 1/4"	1 1/2"
3/16"	36	60	75
7/32"	33	51	63
1/4"	27	42	54

PERFORATION SPACING = 3.0 FEET

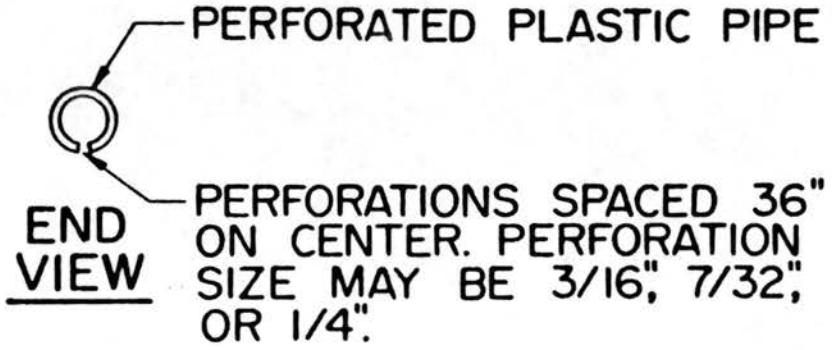

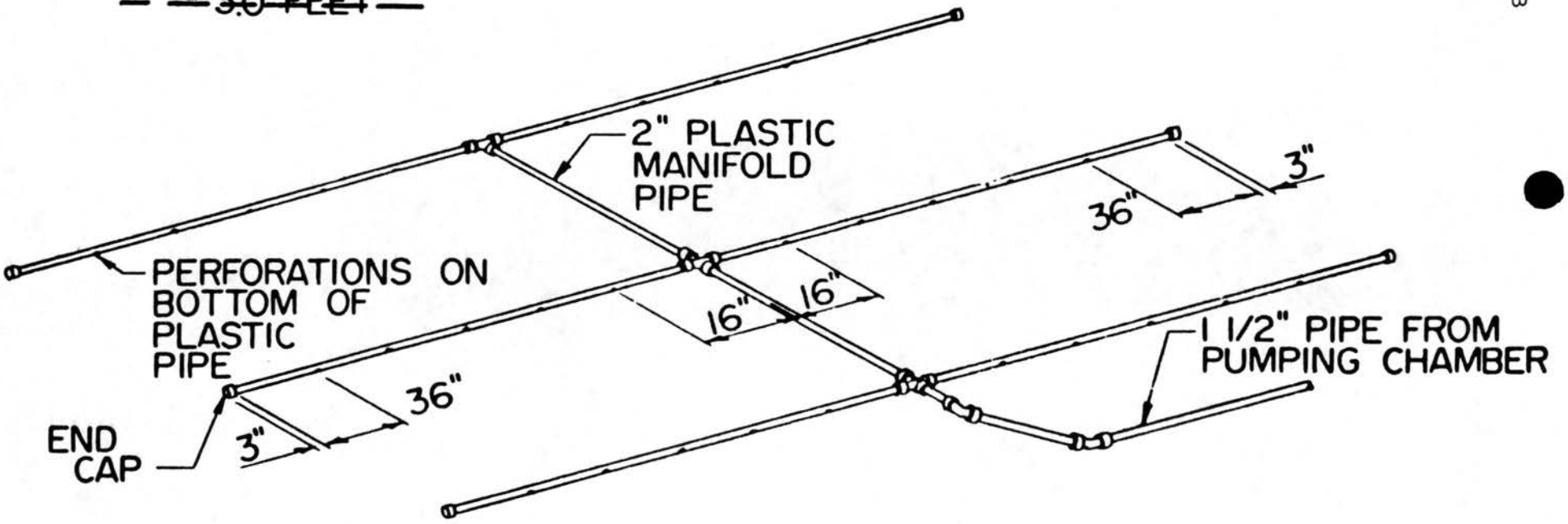

APPENDIX C

MHD 123 Materials

(a) Quality of Materials. All materials used in any drainage or plumbing system or part thereof, shall be free from defects, and no materials which are damaged or defective, shall knowingly be installed.

(b) Identification of Materials. All materials must be marked, unless otherwise easily identifiable, so as to provide a visual means of identification as to types, grades, weights, and strengths. The installer shall, as far as possible, position the identification marks so as to provide ease of inspection by the Administrative Authority.

(c) Standards for Plumbing Materials

(1) Approved Materials. A material shall be considered approved if it meets one or more of the standards cited in Table 123(c)(3) **Standards for Plumbing Materials.** Materials not listed in Table 123(c)(3) shall be used only as provided for in MHD 122(h)(3), or as permitted elsewhere in this Code.

(2) Abbreviations. Abbreviations in Table 123(c)(3) refer to the following:

ANSI — American National Standards Institute
10 East 40th Street
New York, New York 10016

ASTM — American Society for Testing and Materials
1916 Race Street
Philadelphia, Pennsylvania 19103

AWWA — American Water Works Association
2 Park Avenue
New York City, New York 10016

CS — Commercial Standards Available From:
Commodity Standards Division
Office of Industry and Commerce
U. S. Department of Commerce
Washington, D. C. 20234

FS — Federal Specifications Available From:
Federal Supply Service
Standards Division—General Services Administration
Washington, D. C. 20406

NSF — National Sanitation Foundation
Ann Arbor, Michigan 48106

FHA — Federal Housing Authority
Architectural Standards Division
Washington, D. C.

TABLE 123 (C) (3)

STANDARDS FOR PLUMBING MATERIALS

DESCRIPTION	ANSI	ASTM	FS	OTHER
I. CAST IRON PIPE & FITTINGS	A21.2 A21.6	A-74	WW.P.401C	CS188
1A Cast Iron Pipe & Fittings Extra Heavy	A21.8			
1B Cast Iron Pipe Centrifugally Cast only and fittings	A21.6	A-74	WW.P.401C	CS188
Service Weight	A21.8			
1C Cast Iron Mechanical	A21.11			
(Gland Type) Pipe	A21.2 A21.6		WW-P-421a	
1D Cast Iron Mechanical (Gland Type) Pipe Cement Lined	A21.8 A21.4 A21.2 A21.6 A21.8			
1E Cast Iron Short Body Water Service Fittings (2"-12")	A21.10			AWWA C100
1F Cast Iron Threaded Pipe	A40.5			
1G High Silicon Pipe, Fittings Cast Iron				
1H Cast Iron Threaded Fittings Black and galvanized 125#	B16.4		WW-P-501	
1J Cast Iron Drainage Fittings Black and Galvanized	B16.12		WW-P-491	
1K Hubless Cast Iron Pipe and Fittings (amended 8-31-72)				CISPI Standard 301-69T

* * * * *

V. SILICA AND EARTH PRODUCTS PIPE AND FITTINGS, NON METALLIC			
5A Asbestos—Cement Pressure Pipe and Fitting	C500 C296	SS-P351	
5B Asbestos—Cement Water Pipe and Fittings	C500	SS-P-351	AWWA C400
5C Asbestos—Cement Non Pressure Pipe and Fittings	C428	XX-P-331	
5D Asbestos—Cement Perforated Underdrain Pipe and Fittings	C508		
5E Vitrified Clay Pipe, Standard Strength and Stronger fittings	C13 C200		
5F Unglazed Clay Pipe, Extra Strength and fittings	C278		
5G Perforated Clay Pipe and Fittings	C211		
5H Borosilicate Glass Pipe and Fittings 60 psi			
5J Non Reinforced Concrete Draintile	C412		AASHO M178

5K Non Reinforced Concrete Pipe.....	C14	SS-P-371	AASHO M86
5L Perforated Concrete Pipe, Underdrainage...	C444		
5M Reinforced Concrete Pipe.....	C76	SS-P-375	
5N Reinforced and Prestressed Concrete Pipe, Pressure Type and Fittings.....			
5O Bituminized Fiber Drain and Sewer Pipe...	D1860	SS-P-1540A	(Amended 8-31-72)
5P Perforated Bituminized Fiber Pipe for General Drainage.....	D2311	SS-P-1540A	(Amended 8-31-72)
VI. PLASTIC PIPE AND FITTINGS DRAIN, WASTE AND VENT			
6A Acrylonitrile-Butadiene-Styrene (ABS).....	D2661	L-P-322a	HSF14
Type 1, Schedule 40.....		FHA-MPS	CS270
6B Polyvinyl Chloride (pvc).....	D2665	L-P-320a	NSF14
Schedule 40 Unthreaded.....		FHA-MPS	CS272
Schedule 80 can be threaded BUILDING SEWER.....		L-P-001221	
6C (1) Styrene—Rubber.....	D2852	(Filed 4-5-73)	CS228
6C (2) Polyvinyl Chloride (pvc).....	D3033	FHA-UM-26	
(Amended 4-5-73)	D3034	WW-P-00380a	

* * * * *

(d) Piping System Materials

* * * * *

(4) **Building Sewers**

(aa) Cast Iron 1A and 1B and fittings and Hubless Cast Iron 1K. *(Amended 6-26-72)*

(bb) Cast Iron 1C and 1D with 1E fittings.

(cc) Asbestos Cement 5A and 5C and fittings laid on a continuous granular bed and only in yard areas.

(dd) Clay pipe and fittings 5E laid on a continuous granular bed.

(ee) Concrete pipe 5K in yard areas and not under permanent streets, laid on a continuous granular bed.

(ff) Concrete 5N.

(gg) Plastic 6A, 6B, 6C(1), and 6C(2) laid on a continuous granular bed in yard areas. *(Amended 4-5-73)*

(hh) Bituminized-fiber drain and sewer pipe 50, laid on a continuous granular bed. *(Amended 8-31-72)*

* * * * *

MHD 124 Joints and Connections

(a) Types of Joints for Piping Materials

(1) **Tightness.** Joints and connections in the plumbing system shall be gastight and watertight for the pressure required by test, with the exception of those portions of perforated or open joint piping which are installed for the purpose of collecting and conveying ground or seepage water.

(2) Types of Joints

(aa) **Caulked Joints.** Caulked joints for cast-iron bell and spigot soil pipe shall be firmly packed with oakum or hemp and filled with molten lead not less than 1 inch deep and shall extend not more than ⅛ inch below rim of hub. No paint, varnish, or any other coatings shall be permitted on the jointing material until after the joint has been tested and approved. Lead shall be caulked tight.

(bb) **Threaded Joints—Screwed Joints.** Threaded joints shall conform to American National taper pipe thread, ASA - B2.1 - 1945 or FS GGG - P - 351a. All burrs shall be removed. Pipe ends shall be reamed out to size of bore and chips removed. Pipe joint compound shall be used on male threads only.

(cc) **Wiped Joints.** Joints in lead pipe or fittings, or between lead pipe or fittings and brass or copper pipe, ferrules, solder nipples, or traps, shall be full wiped joints. Wiped joints shall have an exposed surface on each side of the joint not less than ¾ inch, and a minimum thickness at the thickest part of the joint of not less than ⅜ inch. Joints between lead pipe and cast iron, steel, or wrought iron shall be made by means of a caulking ferrule, soldering nipple, or bushing.

(dd) **Soldered or Brazed Joints.** Joints with copper tube with solder joint fittings shall be soldered or brazed. Surfaces to be soldered or brazed shall be thoroughly cleaned. Joints to be soldered shall be properly fluxed with non-corrosive paste type flux. Solder used for joints shall have a nominal composition of 50% tin and 50% lead, or 95% tin and 5% antimony, conforming to ASTM Standard Specification for soft solder metal B32-60T. Joints to be brazed shall be properly fluxed with a flux suitable for brazing material which is used. Brazing material shall conform to ASTM Standard Specification for Brazing Filler Metal B260-52T.

(ee) **Flared Joints.** Flared joints for soft copper water tubing shall be made with fittings meeting approved standards. (See Table 123(c)(3)) The tubing shall be reamed and expanded with proper flaring tools.

(ff) **Hot-poured Joints.** Hot-poured compound for clay or concrete sewer pipe, or other materials, shall not be water absorbent, and when poured against a dry surface shall have a bond of not less than 100 pounds per square inch. All surfaces of the joint shall be clean and dried before pouring. If wet surfaces are unavoidable, a suitable primer shall be applied.

The compound shall not soften sufficiently to destroy the effectiveness of the joint when subjected to a temperature of 160° Fahrenheit nor soluable in any of the waste carried by the drainage system. Approximately 25% of the joint space at the base of the socket shall be filled with jute or hemp. A pouring collar, rope, or other device shall be used to hold the hot compound when pouring. Each joint shall be poured in one operation until the joint is filled. Joints shall not be tested until one hour after pouring.

(gg) **Cold Joint Compound (Tar Base).** Cold joint compound (tar base) for clay and concrete pipe shall not be water absorbent, and shall bond itself to vitrified clay and concrete pipe. Half of the joint must be packed with oakum, and the remainder with cold tar compound.

(hh) **Gasket Type Joints. Resilient Rubber Joints for Clay or Concrete.** Flexible joints between lengths of clay or concrete pipe may be made by using approved resilient or rubber materials, both on the spigot end and in the bell end of the pipe.

(ii) **Cement Mortar Joints.** Except for repairs and connections of existing lines constructed with such joints, cement mortar joints are prohibited. Where permitted, cement mortar joints shall be made in the following manner: A layer of jute or hemp shall be inserted into the base of the annular joint space and packed tightly to prevent mortar from entering the interior of the pipe or fitting. Not more than 25% of the annular space shall be used for jute or hemp. The remaining space shall be filled in one continuous operation with a thoroughly mixed mortar composed of one part cement and two parts sand, with only sufficient water to make the mixture workable by hand. Additional mortar of the same composition shall then be applied to form a one to one slope with the barrel of the pipe. The bell or hub of the pipe shall be left exposed and when necessary the interior of the pipe shall be swabbed to remove any mortar or other material which may have found its way into such pipe.

(jj) **Burned Lead Joints.** Burned (welded) lead joints shall be fused together to form a uniform weld at least as thick as the lead being joined.

(kk) **Asbestos Cement Sewer Pipe Joints.** Joints in asbestos cement pipe shall be made with sleeve couplings of the same composition as the pipe, sealed with rubber rings. Joints between asbestos cement pipe and metal pipe shall be made by means of an adapter coupling caulked as required in MHD 124(a)(2)(aa). No adapted coupling shall be used that does not have a center ridge. Pipe must not be able to pass through the coupling.

(ll) **Mechanical Joints**

(ll-1) **Mechanical Joints for Cast-Iron Water Pipe.** Mechanical joints in cast-iron water pipe shall be made by means of a flanged collar and rubber ring gasket, secured by the use of an adequate number of

steel bolts. .The rubber sealing ring shall conform to A.S.A. A21-Point 11 Requirements.

(ll-2) **Mechanical Joints in Cast-Iron Soil Pipe.** Mechanical joints in cast-iron soil pipe shall be made by means of a preformed molded rubber ring, secured by pulling the pipe and fittings together in such a way as to compress the molded rubber ring in a manner that will assure a gas and water tight joint. The rubber sealing ring shall conform to A.S.T.M. 564-65 requirements.

(ll-3) **Mechanical Joints in Chemical Waste Pipe.** Mechanical joints in chemical waste pipe, of prestressed, low-expansion borosilicate glass pipe and high silicon content cast-iron pipe, shall be joined by means of a stainless steel corrosion resistant clamp assembly, or a clamp assembly utilizing a fiberglass reinforced nylon shell surrounding a sealing sleeve of an elastomeric material containing an approved acid and corrosion resistant seal ring or gasket in such a manner that the sleeve and ring seal or gasket are firmly compressed by the tightening device in order that a gas and water tight joint is provided. The sleeves or bands for this type joint shall be marked with the words "All Stainless", or the recognized abbreviation therefore, and marked with the pipe size for which its use is intended. Fiberglass reinforced shells must bear the manufacturer name. The sleeve must be used as factory assembled. During installation assembly, the pipe or fittings must be inserted into the sleeve so as to be firmly seated against the center rib or shoulder of the gasket, and on all field cut lengths the ends must be as square and smooth as possible. *(Amended 6-26-72)*

(ll-4) **Mechanical Joints in Hubless Cast Iron Soil Pipe.** Mechanical joints for hubless cast iron soil pipe and fittings shall be made by using a neoprene sleeve and stainless steel retaining band as specified in CISPI standard 301. *(Amended 6-26-72)*

(ll-5) **Mechanical Pipe Couplings and Fittings.** Couplings shall be made with the housing fabricated in two or more parts of malleable iron castings in accordance with Federal Specification QQ-I-666c, Grand 11, or with ASTM A47 or ASTM A339. The coupling gasket shall be molded synthetic rubber, per ASTM D-735-61, Grade No. R615BZ. Coupling bolts shall be oval neck track head type with hexagonal heavy nuts, per ASTM-A-183-60, or ASTM A325.

Pipe fittings used with these pipe couplings shall be fabricated or malleable iron castings in accordance with Federal Specifications QQ-I-666c, Grade 11, or with ASTM A47; ductile iron ASTM A339; segweld steel ASTM53 or A106.

These couplings and fittings may be used above ground, for storm drains and leaders and for water distribution pipe provided exposed parts in contact with water are galvanized. *(Amended 6-26-72)*

(mm) **Plastic Joints.** Every joint in plastic piping shall be made with approved fittings by either solvent welded or fusion welded connections or with approved insert fittings and metal clamps and screws of corrosion resistant material or threaded joints according to accepted standards. All solvent materials must meet approved recognized standards.

(nn) **Bituminized Fiber Drain Pipe Joints.** Pipe and bends shall be provided with accurately machined or molded tapered joints, and a taper-

sleeve coupling shall be provided for each length of pipe and for each bend. The slope of the taper in both pipe and coupling shall be 2°. *(Amended 6-26-72)*

(3) Use of Joints

(aa) Clay Sewer Pipe. Joints in clay sewer pipe, or between such pipe and metal pipe shall be made as provided in MHD 124(a)(2)(ff),(gg), (hh), and (ii).

(bb) Concrete Sewer Pipe. Joints in concrete sewer pipe, or between pipe and metal pipe, shall be made by means as provided in MHD 124(a)(2)(ff),(gg),(hh) and (ii).

(cc) Cast-Iron Pipe. Joints in cast-iron shall be either caulked or screwed, as provided in MHD 124(a)(2)(aa),(bb), and (cc).

(dd) Cast-Iron Soil Pipe. Joints in cast-iron soil pipe may be made by means as provided in MHD 124(a)(2)(aa) or (ll-2).

(ee) Threaded Pipe to Cast-Iron. Every joint between wrought iron, steel, brass, copper and cast-iron pipe shall be either caulked or threaded joints as provided in MHD 124(a)(2)(aa),(bb) and (cc) and shall be made with approved adapter fittings.

(ff) Lead to Cast-Iron, Wrought Iron and Steel. Joints between lead and cast-iron, wrought iron, or steel shall be made by means of wiped joints to a caulking ferrule, soldering nipple or bushing as provided in MHD 124(a)(2)(cc).

(gg) Copper Water Tube. Joints in copper water tubing shall be made either by the appropriate use of approved brass or wrought copper water fittings properly soldered or brazed, or by means of approved flared fittings as provided in MHD 124(a)(2)(ee).

(hh) Plastic Pipe Joints. Joints in plastic pipe or between plastic and cast-iron, steel, brass or copper pipe shall be made as provided in MHD 124(a)(2)(mm).

(ii) Bituminized Fiber Pipe Joints. Joints in bituminized fiber pipe shall be made as provided for in MHD 124(a)(2)(nn). *(Amended 6-26-72)*

(4) Special Joints

(aa) Copper Tubing to Threaded Pipe Joints. Joints from copper tubing to threaded pipe shall be made by the use of brass or copper adapter fittings. The joint between the copper pipe and fitting shall be properly soldered, brazed or flared.

(bb) Cast-Iron to Copper Tube. Caulked joints between copper tubing and cast-iron soil pipe shall be made by means of brass or copper ferrules or other approved adapter fittings.

(cc) Slip Joints. In drainage piping, slip joints shall be used only on the inlet side of the trap or in the trap seal. Every slip joint shall be made using approved packings of gasket material or approved ground joint brass compression rings. Ground faced connections which allow

adjustments of tubing but provide a durable rigid joint when made up shall not be considered as a slip joint.

(dd) **Expansion Joints.** Every expansion joint shall be of an approved type and the material used in its manufacture shall be compatible with the type of piping in which it is installed. Every expansion joint, other than an expansion loop, shall be accessible. (Also see MHD 133(i))

(ee) **Bituminized Fiber to Other Types of Pipe.** When connecting bituminized fiber pipe to other types of materials, only approved types of fittings and adaptors designed for the specific transition intended shall be used. *(Amended 6-26-72)*

(5) **Flanged Fixture Connections.** Fixture connections between drainage pipes and water closets, pedestal urinals, and earthenware trap standards shall be made by means of brass, plastic, or iron flanges, caulked, soldered, solvent welded, or screwed to the drainage pipe. The connection shall be bolted, with an approved gasket, washer or setting compound between the earthenware and the connection. Floor flanges of other equivalent materials may be used when approved by the Administrative Authority.

The bottom of the floor flange shall be set on the top of the finished floor or on a structurally firm base. Closet bends or stubs must be cut off so as to present a smooth surface, even with the top of the closet flange. Use of commercial putty or plastic as fixture setting compound is prohibited.

(6) **Prohibited Joints and Connections.** See MHD 131(b)(3).

(7) **Increasers and Reducers.** Brass or cast-iron body cleanouts shall not be used as a reducer or adapter from cast-iron soil pipe to steel or wrought iron pipe. Where different sizes of pipe or pipes and fittings are to be connected, the proper size increasers, reducers, or reducing fittings shall be used between the two sizes. Hexagon screwed bushings shall not be used in drainage piping.

MHD 125 Traps and Clean Outs

* * * * *

(b) **Drainage Pipe Cleanouts**

(1) **Location.** There shall be at least 2 cleanouts in the building drain, one at or near the base of the stack and one near the connection between the building drain and the building sewer. The cleanout at the outside wall may be inside or outside the building, and shall be made with a full "Y" branch fitting and shall extend at least 2 inches above grade or finished floor, except that the Administrative Authority may grant permission to use a flush cover in traffic areas.

A cleanout which is easily accessible shall be provided at or near the foot of each vertical soil or waste stack.

Each horizontal branch drain pipe shall be provided with a cleanout at its upper terminal, except that a fixture trap or a fixture with an integral trap, readily removable without disturbing concealed piping, may be accepted as a cleanout equivalent for this purpose.

(2) **Size of Cleanouts.** The cleanout shall be of the same nominal size as the pipes they serve up to 4 inches in diameter and not less than 4 inches for larger piping.

The distance between cleanouts in horizontal piping shall not exceed 50 feet for 3 inch or less in size and not over 100 feet for 4 inch and over in size.

(3) **Cleanout Materials.** The bodies of cleanout ferrules shall be made to standard pipe sizes, conform in thickness to that required for pipe and fittings of the same material and extend not less than ¼ inch above the hub. The cleanout cover or plug shall be of brass, cast-iron or approved plastic and be provided with a raised nut or recessed socket for removal.

Cleanouts for cast-iron soil pipe shall have cleanout covers made of brass and conform to specifications and details as shown in Figure 125(b)(3). Appendix B.

(4) **Cleanouts to be Accessible.** Each cleanout, unless installed under an approved cover plate or left flush with the finished floor, shall be at least 2 inches above grade, readily accessible and shall not be covered with cement, plaster, or other permanent finish material. Where a soil stack cleanout is located within 10 feet of where the building drain leaves the building, the cleanout at the outside wall may be eliminated.

MHD 131 Drainage Systems

(a) Determining Size of Drainage System

(1) Load on Drainage Piping. The load on drainage system piping shall be computed in terms of drainage fixture units in accordance with Table 131(a)(1) and MHD 131(a)(1)(aa), except the Administrative Authority may allow variations where it is shown by a hydraulic analysis of the piping system, submitted to the Administrative Authority, that such variation would result in a more desirable flow rate in the piping system.

TABLE 131 (a) (1)

FIXTURE UNIT VALUES FOR VARIOUS PLUMBING FIXTURES

Type of Fixture	Fixture Unit Value	Minimum Fixture Trap and drain size
Clothes Washer (Domestic Use)	2	1½
Clothes Washer (Public Use in Groups of 8 or more)	6 each	
Bath tub with or without shower	2	1½
Bidet	2	1½
Dental unit or cuspidor	1	1¼
Drinking Fountain	1	1¼
Dishwasher, Domestic	2	1½
Dishwasher, Commercial	4	2
Floor Drain with 2 inch waste	2	2
Floor drain with 3 inch waste	3	3
Floor Drain with 4 inch waste	4	4
Lavatory	1	1¼
Laundry Tray (1 or 2 Compartment)	2	1½
Shower Stall, Domestic	2	1½
Shower (Gang) per head	1	
SINKS:		
Combination, Sink and Tray (with disposal unit)	3	1½
Combination, Sink and Tray (with one trap)	2	1½
Domestic	2	1½
Domestic, with disposal unit	2	1½
Surgeons	3	1½
Laboratory	1	1½
Flushrim or Bedpan washer	6	3
Service	3	2
Pot or Scullery	4	2
Soda Fountain	2	1½
Commercial, Flat Rim, Bar or Counter	3	1½
Wash, Circular or Multiple (per set of faucets)	2	1½
URINAL Pedestal, Wall Hung, with 3 inch trap (Blowout and Syphon Jet)	6	3
Wall Hung with 2 inch trap	3	2
Wall Hung with 1½ inch trap	2	1½
Trough (per 6 foot section)	2	1½
Stall	3	2
WATER CLOSET	6	3
Unlisted Fixture or Trap Size		
1¼ inch	1	
1½ inch	2	
2 inch	3	
2½ inch	4	
3 inch	5	
4 inch	6	

(aa) **Values for Continuous Flow.** Fixture unit values for continuous or semi-continuous flow into the drainage system, such as from a pump, sump ejector, air conditioning equipment, or similar device shall be computed on the basis of one fixture unit for each gallon per minute flow.

(2) **Selecting Size of Drainage Piping.** Pipe sizes shall be determined from Table 131(a)(2)A and Table 131(a)(2)B on the basis of drainage load computed from Table 131(a)(1) and MHD 131(a)(1)(aa).

TABLE 131 (a) (2)A

MAXIMUM LOADS FOR HORIZONTAL DRAINS IN FIXTURE UNITS

Diameter of Drain	Horizontal Fixture Branch*- ¼ in/ft.	Building Sewer, Building Drain and Building Drain Branches-from Stacks**** Slope			
		1/16 in/ft.	⅛ in/ft.	¼ in/ft.	½ in/ft.
(inches)	(f.u.)	(f.u.)	(f.u.)	(f.u.)	(f.u.)
1¼	1				
1½	3				
2	6			21	26
2½	12			24	31
3**	32***		36***	42***	50***
4	160		180	216	250
5	360		390	480	575
6	620		700	840	1,000
8	—	1,400	1,600	1,920	2,300
10	—	2,500	2,900	3,500	4,200
12	—	3,900	4,600	5,600	6,700
15	—	7,000	8,300	10,000	12,000

*Includes Horizontal Branches of the Building Drain.
**No water closet shall discharge into a drain less than 3 inch.
***Not over 2 Water Closets.
****Every building drain that receives the discharge of (3) or more water closets, shall not be less than 4 inch in diameter. *(Amended 7-26-73)*

(3) **Minimum Size of Soil and Waste Stacks.** No soil or waste stack shall be smaller than the largest horizontal branch connected thereto except that a 4x3 water closet connection shall not be considered as a reduction in pipe size.

(4) **Minimum Size of Stack Vent or Vent Stack.** Any structure in which a building drain is installed shall have at least one stack vent or vent stack carried full size through the roof not less than 3 inches in diameter. Where one or more soil stacks are required to extend through the roof undiminished in size they should be the stack or stacks most remote from the location where the building drain leaves the building. When a soil or waste stack receives the discharge of fixtures located on 2 or more floors, and the uppermost fixture is located 3 or more floors above the building drain, such stack and stack vent shall continue undiminished in size through the roof. *(Amended 4-5-73)*

(5) **Provision for Future Fixtures.** When provision is made for future installation of fixtures, those provided for shall be considered in determining the required sizes of drain and vent pipes. Construction to provide for such future installations shall be terminated with a plugged fitting or fittings.

TABLE 131 (a) (2)B

MAXIMUM LOADS FOR SOIL AND WASTE STACKS IN FIXTURE UNITS

Diameter of Stack	Stacks of not more than 3 stories or Branch Intervals	Stacks of more than 3 stories or Branch Intervals	Total at One Story or Branch Interval
1¼*	2	2	1
1½*	4	4	2
2*	9	18	6
2½*	20	42	9
3	36***	72***	24**
4	240	500	90
5	540	1,100	200
6	960	1,900	350
8	—	3,600	600
10	—	5,600	1,000
12	—	8,400	1,500

*No water closets permitted.
**Not over 2 water closets permitted.
***Not over 6 water closets permitted, and not over 6 branch intervals on a 3 inch soil stack.

(Amended 12-26-72)

(6) **Minimum Size of Underground Drainage Piping.** No portion of the drainage system installed underground shall be less than 2 inches in diameter.

(7) **Sizing of Offsets on Drainage Piping**

(aa) **Offsets of 45 Degrees or Less.** An offset in a vertical stack with a change of direction of 45° or less from the vertical, may be sized as a straight vertical stack.

(bb) **Offsets of more than 45 Degrees.** A stack with an offset of more than 45 degrees from the vertical shall be sized as follows:

The portion of the stack above the offset shall be sized as for a regular stack based on the total number of fixture units above the offset.

The offset shall be sized as for a building drain branch. Table 131(a)(2)A Maximum Loads for Horizontal Drains.

The portion of the stack below the offset shall be sized at least as large as the offset. *(Amended 4-5-73)*

(cc) **Above Highest Branch.** An offset above the highest branch connection is an offset in the stack vent and shall be considered only as it affects the developed length of the vent.

(dd) **Below Lowest Branch.** In the case of an offset in a soil or waste stack below the lowest branch connection, there shall be no change in diameter required if the offset is made at an angle of not greater than 45 degrees from the vertical.

If such offset is made at an angle of greater than 45 degrees from the vertical, the required diameter of the offset and the stack below it shall be sized as for a building drain. (Table 131(a)(2)A)

(8) **Fixture Connections to an Offset of More than 45° or at Base of Stack.** When stacks in buildings of 5 or more stories in height receive the discharge of fixtures 4 or more stories above the offset, no fixtures on the floor at which the offset occurs shall be connected to the stack within 8 feet of the base of the offset measured vertically or horizontally. Said fixtures may also be connected into vertical section of the stack more than 2 feet below the offset. Fixture connections to horizontal piping at the bases of such stacks shall be made in the same manner, or at a point acceptable to the Administrative authority.

(b) **Drainage Piping Installation**

(1) **Pitch or Horizontal Drainage Piping.** Horizontal drainage piping shall be installed in uniform alignment at uniform slopes in accordance with the following requirements and in no case at a slope which will produce a computed velocity of less than 2 feet per second, unless otherwise permitted by the Administrative Authority, based on hydraulic analysis of the piping system.

Size of Piping	Minimum Slope
Less than 3 inches	1/4 inch per foot
3 inches to 6 inches	1/8 inch per foot
8 inches and over	1/16 inch per foot

(2) **Change in Direction.** Changes in direction in drainage piping shall be made by the appropriate use of 45 degree wyes, long or short sweep quarter bends, sixth, eighth, or sixteenth bends, or by combination of these or equivalent fittings. Single and double sanitary tees, quarter bends, and long turn ells may be used in drainage lines only where the direction of the flow is from the horizontal to the vertical.

(aa) **Short Sweeps Permitted.** Short sweep bends or long turn ells 3 inch or larger in diameter may be used in soil or waste lines where the change in direction of flow is from either the horizontal to the vertical or from the vertical to the horizontal.

(3) **Prohibited Fittings and Connections.** No fittings having a hub in the direction opposite to flow, or straight tee branch shall be used as a drainage fitting. No fitting or connection which has an enlargement chamber or recess with a ledge or shoulder, or reduction in pipe area shall be used. No drainage or vent piping shall be drilled, tapped, or welded unless otherwise permitted by the Administrative Authority. Fittings used for back-to-back, wall outlet, blowout type water closet bowls shall have a baffle plate or other device to prevent the waste water from one water closet from entering the opposite water closet. No fixture connection shall be made to a closet bend. No running threads, bands, or saddles shall be used. The short pattern fitting in a horizontal position is prohibited in underground work.

(aa) **Heel or Side-Inlet Bends.** A heel or side-inlet quarter bend shall not be used as a vent when the inlet is placed in a horizontal position or any similar arrangement of pipe or fittings producing a similar effect.

(bb) **Obstruction to Flow.** No fitting, connection, device or method of installation which obstructs or retards the flow of water, wastes, sewage, or air in the drainage or venting system in an amount greater than the normal frictional resistance to flow, shall be used unless it is indicated as acceptable to this Code by having a desirable and acceptable function and as of ultimate benefit to the proper and continuing functioning of the plumb-

ing system. The enlargement of a 3 inch closet bend or stub to 4 inches shall not be considered an obstruction, provided the horizontal flow line or insert is continuous without forming a ledge.

(4) **Dead Ends.** In the installation of a drainage system, dead ends shall be avoided except where necessary to extend piping for a cleanout so as to be accessible.

(5) **Building Drains Below Building Sewer.** Building drains which cannot be discharged to the sewer by gravity flow shall discharge into an approved watertight, gas tight vented sump or receiving tank, so located as to receive the sewage or wastes by gravity. From such sump or receiving tank the sewage or other liquid wastes shall be lifted and discharged into the building gravity drain by approved automatic pumping equipment. The system or drainage piping entering such sump shall be installed and vented as required in this section for a gravity system.

(aa) Design of Sumps -

(aa1) Sumps and receiving tanks shall be constructed of poured concrete, metal, or other approved materials. If constructed of poured concrete, the walls and bottom shall be adequately reinforced and designed to acceptable standards. Metal sumps or tanks shall be of such thickness as to serve their intended purpose and shall be treated internally and externally to resist corrosion.

(aa2) The discharge line from such pumping equipment shall be provided with an accessible back-water valve and gate valve, and if the gravity drainage line to which such discharge line connects is horizontal, the method of connection shall be from the top through a wye branch fitting. The minimum size of any pump or discharge pipe from a sump having a water closet connected thereto shall not be less than 2 inches.

(aa3) Building drains or building sewers receiving discharge from any pumping equipment shall be adequately sized to prevent over-loading. In all buildings, other than single and 2 family dwellings, should 3 or more water closets discharge into the sump, duplicate pumping equipment shall be installed.

(aa4) Sumps and receiving tanks shall be provided with gastight metal covers, except that float control or switch rods shall operate without binding. Such cover shall be of a bolt and gasket type or equivalent manhole opening to permit access for inspection, repairs, and cleaning.

(bb) **Sump Vent.** The top of the sump tank shall be provided with a vent pipe which shall extend separately through the roof, or may be combined with other vent pipes. Such vent shall be large enough to maintain atmospheric pressure within the sump under all normal operating conditions and in no case less than in accordance with the number of fixture units discharging into the sump. When the foregoing requirements are met and the vent after leaving the sump, is combined with vents from fixtures discharging into the sump, the size of the combined vent need not exceed that required for the total number of fixtures discharging into the sump. No vent from an air operated sewage ejector shall combine with other vents.

(cc) **Clear Water Sumps.** Sumps and receiving tanks which receive only clear water drainage, and from which sewage is excluded, need not be air tight or vented.

MHD 134 Inspection, Tests and Maintenance

(a) **Inspections.** New plumbing systems and parts of existing systems which have been altered, extended or repaired shall be inspected and tested by the proper Administrative Authority to insure compliance with all the requirements of this Code and the installation and construction of the system in accordance with the approved plan and the permit, except that testing may be waived for work which does not include addition to, replacement, alteration, or relocation of any water supply, drainage or vent piping.

All the piping shall be tested and after the plumbing fixtures have been set, and before the system is put into use, the system shall be given a final inspection and test by the proper Administrative Authority.

(b) **Notifications**

(1) It shall be the duty of the plumbing contractor to notify the proper Administrative Authority and the Owner, or his authorized agent orally, by telephone, or in writing, not less than eight working hours between the hours of 8 a.m. and 4 p.m. before the work is to be inspected or tested.

(2) It shall be the duty of the plumbing contractor to make sure that the work will stand the test prescribed before giving the above notification.

(3) If the proper Administrative Authority finds that the work will not stand the test, the plumbing contractor shall be required to renotify as above.

(4) If the proper Administrative Authority does not appear for an inspection within 24 hours of the time set, excluding Saturdays, Sundays and Holidays, the inspection or test shall be deemed to have been made, and the plumbing contractor is required to file an affidavit with the proper Administrative Authority that the work was installed in accordance with the Code, the approved plans and permit, and that it was free from defects and that the required tests had been made and the system found free from leaks; also whether the owner or his authorized agent was present when such inspection or test was made.

(c) **Material and Labor for Tests.** The equipment, material, power, and labor necessary for the inspection and test shall be furnished by the plumbing contractor.

(d) **Method of Testing.** The air tests shall be applied to the plumbing drainage system in its entirety or in sections. Sections which are found satisfactory need not be retested after completion of the entire system unless considered necessary by the proper Administrative Authority.

(1) **Rough Plumbing.** Except for outside leaders and perforated or open drain tile, the piping of plumbing drainage and venting systems shall be air tested upon completion of the rough piping.

(aa) The air test shall be made by attaching the air compressor or testing apparatus to any suitable opening and closing all other inlets and outlets to the system by means of proper testing plugs. Plaster paris shall not be used in roof terminals.

(bb) Air shall be forced into the system until there is a uniform pressure of 5 pounds per square inch on the portion of the system being tested. The pressure shall remain constant for 15 minutes without the addition of air.

(2) **Finished Plumbing.** After the plumbing fixtures have been set and their traps filled with water, their connections shall be tested and proven gas and water tight by plugging the stack openings on the roof and the building drain where it leaves the building, and air introduced into the system equal to the pressure of a one inch water column. Such pressure shall remain constant for the period of inspection without the introduction of additional air.

(e) **Covering of Work.** No building drainage or plumbing system or part thereof shall be covered until it has been inspected, tested, and approved as herein prescribed.

(f) **Uncovering of Work.** If any building drainage or plumbing system or part thereof is covered before being regularly inspected, tested, and approved, as herein prescribed, it shall be uncovered upon the direction of the proper Administrative Authority.

(g) **Defective Work.** If the inspection or test shows defects, such defective work or material shall be replaced and the inspection and test repeated.

(h) **Building Sewer.** The building sewer shall be inspected by the proper Administrative Authority to insure compliance with the provisions of the Code.

* * * * *

(k) **Certificate of Approval.** Upon the satisfactory completion and final inspection of the plumbing system, a certificate of approval shall be issued by the proper Administrative Authority.

(l) **Air Test of Defective Plumbing.** The air test shall be used in testing the sanitary condition of the drainage or plumbing system of all buildings where there is reason to believe that it has become defective. In buildings condemned by the proper Administrative Authority because of insanitary conditions of the plumbing system, the alterations in such system shall not be considered as repairs, but as new plumbing.

Where buildings are moved from one location to another, or raised for foundations, or where part of the plumbing system has been damaged by fire, storm, or other means, a final air test shall be applied and shall hold tight, if in the opinion of the Administrative Authority it is warranted in order to assure a sanitary plumbing system.

* * * * *

(n) **Defective Fixtures.** All installed fixtures found defective or in an insanitary condition shall be repaired, replaced, or removed upon written notice from the proper Administrative Authorities.

(o) **Maintenance.** The plumbing system of every building shall be maintained in a sanitary and safe operating condition.

APPENDIX D

WATER WELL CONSTRUCTION CODE

MHD 217 Location of Wells

* * * * *

(c) Distance from Pollution or Contamination Sources

(1) A well shall be at least:

* * * * *

(dd) Fifty feet (50 ft.) from a buried sewer, septic tank, subsurface disposal field, grave, animal or poultry yard or building, privy, petroleum storage tank, or any other sewage or liquid wastes that may drain into the soil.

(ee) Twenty feet (20 ft.) from a buried sewer constructed of cast iron pipe with tested watertight joints or other material acceptable to the Board; or a pit or unfilled space below ground surface, except an approved basement.

(ff) Wells less than 50 feet in depth and not encountering at least 10 feet of impervious material shall be located at least 150 feet from cesspools, leaching pits, or dry wells and at least 100 feet from a subsurface disposal field, manure storage pile or other source of contamination.[2]

* * * * *

APPENDIX E

Cons 72 Sanitary Provisions

* * * * *

(b) SEWAGE AND WASTE DISPOSAL

* * * * *

(4) Septic tank and soil absorption systems shall be set back from the normal high water mark in accordance with class of public waters:

(aa) On Natural Environment Lakes and Streams, at least 150 feet;

(bb) On Recreational Development Lakes, at least 75 feet;

(cc) On General Development Lakes and Streams, at least 50 feet.

* * * * *

NR 79 Land Use Provisions

* * * * *

(d) SANITARY PROVISIONS

(1) The sanitary provision standards set forth in Minn. Regs. Cons. 72 of the Statewide Standards and Criteria for Management of Shoreland Areas of Minnesota shall apply to Wild, Scenic and Recreational river land use districts.

(2) However, the provisions of Cons. 72 (b) (4) are superseded by the following setback provisions for septic tank and soil absorption systems.

	Setback from the normal high water mark
Wild River	150 feet
Scenic River	100 feet
Recreational River	75 feet
Tributaries	75 feet

* * * * *

NR 83 LAND USE CONTROL PROVISIONS

* * * * *

(d) Sanitary Provisions

* * * * *

(1) Water Supply

* * * * *

(dd) Septic tank and soil absorption systems shall be set back from the ordinary high water mark in accordance with the class of public waters:

(i) On Natural Environment Waters, at least 150 feet;

(ii) On Recreational Development Waters, at least 75 feet; and

(iii) On General Development Waters, at least 50 feet.

* * * * *

MINNESOTA POLLUTION CONTROL AGENCY

Joseph F. Grinnell
Chairman

Sandra S. Gardebring
Executive Director

Dated: APR 25 1978

STATE OF MINNESOTA

COUNTY OF RAMSEY

MINNESOTA POLLUTION

CONTROL AGENCY

In the Matter of the Proposed Adoption of Minn. Reg. WPC 40 Setting Forth Individual Sewage Treatment Systems Standards

NO. PCA-78-004-WS

STATEMENT OF COMPLIANCE WITH MANUAL OF RULE MAKING PROCEDURES

I, Special Assistant Attorney General John-Mark Stensvaag, do hereby declare that I have examined the proposed rules and all related documents and that, based on them and my personal familiarity with the applicable procedures, the Manual of Rule Making Procedures has been followed.

John-Mark Stensvaag

Special Assistant
Attorney General

Dated: MAY 05 1978