

Minnesota Attorney General: Administrative Rules Proceedings

Copyright Notice:

This material may be protected by copyright law (U.S. Code, Title 17). Researchers are liable for any infringement. For more information, visit www.mnhs.org/copyright.

Version 3
August 20, 2018

458 Building Code Division

RULES REVIEW CHECKLIST

DATE RULES RECEIVED 8/11/78 Temporary Rule _____

Resubmitted and Received _____

DUE DATE 8/31/78

a. Returned to Agency w/o filing w/Secy of State _____
b. Approved _____ Date Sent Back to Agency _____

- -

1. Rules as Adopted ✓
2. Rules as Proposed ✓
3. Certificate of Board's Authorizing Resolution, where applicable N/A
4. Order for Hearing ✓
5. Notice of Hearing ✓
   (i) Sufficiency ✓
6. Secretary of State's List ✓
7. Certificate of Acquisition of Secretary of State's List ✓
8. Affidavit of Mailing ✓
   (i) At least 30 days prior to hearing ✓
9. Statement of Need and Evidence ✓
10. Hearing Examiner's Report ✓
11. Agency's Findings of Fact ✓
12. Certificate of Board's Resolution Adopting Rules, where applicable N/A
13. Order Adopting ✓
14. Report of Chief Hearing Examiner ✓
    (i) Finding of No Substantial Change ✓
    (ii) Permission to Incorporate by Reference, where applicable N/A
15. Certificate of Compliance with Rulemaking Procedures ✓
16. Copy of Notice of Intent to Solicit Outside Opinion, where applicable N/A
17. Petition by Public, where applicable N/A.

MIN 1000 (Rev. 1/78)

STATE OF MINNESOTA

DEPARTMENT Attorney General

Office Memorandum

TO : Mike Miles
Assistant Attorney General

DATE: August 11, 1978

RECEIVED
AUG 11 1978
ATTORNEY GENERAL
ADMINISTRATIVE AGENCIES

FROM : Sheila S. Fishman
Special Assistant
Attorney General

PHONE: 296-6204

SUBJECT: Review of Rules - State Building Code

Attached please find the complete record of the November 28, 1978 hearing of the Building Code Division regarding the adoption of amendments to the State Building Code. The brown envelope contains the following documents:

(1) Statement of compliance with rulemaking procedures;
(2) Rules as adopted: "Amendments to State Building Code";
(3) Proposed rules;
(4) Order for Hearing;
(5) Notice of Hearing;
(6) Certificate of Delivery of the Secretary of State List;
(7) Affidavit of Receipt (of Secretary of State's list);
(8) Affidavit of Mailing;
(9) Statement of Evidence and Names of Witnesses
(10) Statement of Need;
(11) Report of Hearing Examiner;
(12) Report of Chief Hearing Examiner;
(13) Supplemental Report of the Chief Hearing Examiner;
(14) Findings of Fact, Conclusions and Order Adopting Rules;

SSF:mb

Attachment

STATE OF MINNESOTA

DEPARTMENT OF ADMINISTRATION

In the Matter of the Proposed
Adoption of Amendments to
the State Building Code

FINDINGS OF FACT, CONCLUSIONS
AND ORDER ADOPTING RULES

The above-entitled matter came on for hearing before Peter Erickson, Hearing Examiner, on the 28th day of November, 1977, after proper notice required by Minn. Stat. 15.0412 (Supp. 1977) was served upon all persons, associations and other interested groups registered with the Secretary of State for that purpose.

After affording interested persons an opportunity to present written and oral data, statements and arguments, having considered all the evidence adduced and upon the records, files and proceedings herein, and applicable statutory standards or criteria, and having considered the findings of fact and recommendations of the Hearing Examiner,

NOW, THEREFORE, the report of the Hearing Examiner and the amendments to the proposed rules suggested therein, are hereby adopted as the findings and conclusions of the Commissioner of Administration (hereinafter "Commissioner) except as noted below.

1. Table 17-B: The Commissioner accepts the recommendation of the Hearing Examiner in Finding #26 a.(5) except for the words "water closet" which should be changed to "urinals".

2. UBC 1807(c) and 1807(k): The Commissioner does not accept the Hearing Examiners Conclusions regarding UBC 1807(c) and 1807(k). These rules are not applicable to the State of Minnesota which is in Seismic Zone 0. There are many such requirements of a similar nature in the code and it is not desireable to delete a select portion of them. (See Hearing Examiners Finding #44c and Conclusion #4)

3. MHD 123 (item 11): The Commissioner does not accept the Hearing Examiners Conclusion regarding the adding of polpropylene to MHD amendments since it is not a material referenced in ASTM F409 and should not be listed here as such. (See Hearing Examiners Finding #77 d and Conclusion #4)

4. Section 4105(i): The Commissioner does not accept the Hearing Examiners Conclusion regarding the adoption of U L Standard 972 by reference. This change would result in an inconsistency with the way the code is presently adopted. (See Hearing Examiners Finding #82c and Conclusion #4)

5. Section 4105(h)1: The Commissioner does not accept the Hearing Examiners Conclusion regarding deletion of this section. It is absolutely essential that construction keys not be useable in locks after occupancy by tenants. (See Hearing Examiners Finding #82f and Conclusion #4).

NOW, THEREFORE, IT IS ORDERED that these rules identified as amendments to the State Building Code as set forth in the findings of fact and conclusions incorporated and described herein, are adopted this 8th day of August, 1978, pursuant to the authority vested in me by Minn. Stat. 16.85, Subd. 1 (1976).

STATE OF MINNESOTA
DEPARTMENT OF ADMINISTRATION

for William G. Kuzniski
Richard L. Brubacher
Commissioner

STATE OF MINNESOTA
OFFICE OF HEARING EXAMINERS

FOR THE DEPARTMENT OF ADMINISTRATION
BUILDING CODE DIVISION

IN THE MATTER OF THE)
PROPOSED ADOPTION OF)
AMENDMENTS TO THE)
STATE BUILDING CODE.)

REPORT OF THE
CHIEF HEARING EXAMINER

WHEREAS, hearings were held on November 28, 29, and 30, 1977, before Peter C. Erickson, a Hearing Examiner of the State Office of Hearing Examiners, on the above-entitled matter in compliance with Minn. Stat. § 15.0412, Subd. 4; and

WHEREAS, the Report of Hearing Examiner made pursuant to Minn. Stat. § 15.052, Subd. 3, was issued to the Building Code Division on March 20, 1978; and

WHEREAS, the Building Code Division has now determined to adopt rules pursuant to Minn. Stat. § 15.0412, Subd. 4; and

WHEREAS, the Building Code Division has submitted said rules to the Chief Hearing Examiner for review pursuant to Minn. Stat. § 15.052, Subd. 4, and Rule HE 107; and

WHEREAS, the Chief Hearing Examiner finds that the final proposed rules are not substantially different from those proposed at the public hearings and that the Building Code Division has met all requirements of Minn. Stat. § 15.0412, Subd. 4.

NOW, THEREFORE, upon receipt of this Report, the Building Code Division has the responsibility of submitting the complete hearing record and the rules as adopted by the Division to the Attorney General and to publish in the State Register, all pursuant to Minn. Stat. § 15.0412, Subd. 4.

Dated this 29th day
of June, 1978.

DUANE R. HARVES
Chief Hearing Examiner

STATE OF MINNESOTA
OFFICE OF HEARING EXAMINERS

FOR THE DEPARTMENT OF ADMINISTRATION
BUILDING CODE DIVISION

In the Matter of the Proposed) Adoption of Amendments to the) State Building Code.)	SUPPLEMENTAL REPORT OF THE CHIEF HEARING EXAMINER

WHEREAS, the record in the above-entitled matter was previously submitted to the Chief Hearing Examiner for his review pursuant to Minn. Stat. § 15.052, subd. 4 and Minn. Rule HE 107 on June 29, 1978; and

WHEREAS, on June 29, 1978, the Chief Hearing Examiner found that the final proposed rules were not substantially different from those at the public hearing, and that the Building Code Division had met all requirements of Minn. Stat. § 15.0412, subd. 4; and

WHEREAS, prior to submitting the rules to the Attorney General, the Building Code Division further amended its rules resulting in the requirement of resubmittal to the Chief Hearing Examiner for review; and

WHEREAS, upon re-review, the Chief Hearing Examiner finds that the final proposed rules are not substantially different from those proposed at the public hearing and that the Building Code Division has met all requirements of Minn. Stat. § 15.0412, subd. 4.

NOW, THEREFORE, upon receipt of this Report, the Building Code Division has the responsibility of submitting the complete hearing record and the rules as adopted by the Building Code Division to the Attorney General and to publish in the State Register, all pursuant to Minn. Stat. § 15.0412, subd. 4.

Dated: August 10th, 1978.

DUANE R. HARVES
Chief Hearing Examiner

STATE OF MINNESOTA
OFFICE OF HEARING EXAMINERS

FOR THE DEPARTMENT OF ADMINISTRATION

In the matter of the Proposed Adoption of Amendments to the State Building Code.

REPORT OF HEARING EXAMINER

The above-entitled matter came on for hearing before Hearing Examiner Peter C. Erickson of the State Office of Hearing Examiners on November 28, 29 and 30, 1977, in the State Office Building, St. Paul, Minnesota

Sheila S. Fishman, Special Assistant Attorney General, appeared as counsel for the Building Code Division (BCD). Donald Pates, Director, BCD; Richard Brooks, Assistant Director; and Alvin Kleinbeck, Building Code Consultant, appeared and testified in support of the proposed rules on behalf of the BCD. The hearing continued until all interested groups or persons had an opportunity to be heard concerning the adoption of the proposed rules.

Pursuant to Minn. Stat. § 15.0412, subd. 4, this Report shall be available for review to all affected individuals upon request for at least five days.

The BCD shall, if it proposes to adopt the rules as originally proposed or amended, submit the complete hearing record, including its Findings and Order, to the Chief Hearing Examiner no earlier than five days subsequent to the receipt of this Report. This submission shall clearly indicate any changes made to the rules as originally proposed, preferably in the format that will be submitted to the State Register for publication. The Chief Hearing Examiner shall complete his review and submit his report to the BCD on the issues of substantial changes in the rule and compliance with Minn. Stat. § 15.0412 within ten calendar days. Thereafter, the BCD shall be responsible for filing the rules with the Attorney General and for notifying persons who have indicated that they wish to be notified of such filing.

Based upon all the records and proceedings herein, the Examiner makes the following:

FINDINGS OF FACT

1. On November 2, 1977, the BCD filed the following documents with the Chief Hearing Examiner:

(a) A copy of the proposed rules;
(b) A proposed Order for Hearing;
(c) A proposed Notice of Hearing; and
(d) A Statement of the estimated length and number of people attending the hearing.

2. On October 24, 1977, a Notice of Hearing and a copy of the proposed rules were published at 2 State Register 837.

3. On October 26, 1977, the BCD mailed the Notice of Hearing to all persons and associations who had registered their names with the Secretary of State for the purpose of receiving such notice.

4. On November 2, 1977, the BCD filed the following documents:

(a) The Order for Hearing;
(b) The Notice of Hearing as mailed;
(c) The Affidavit of Receipt of the Secretary of State's list;
(d) The Affidavit of Mailing;
(e) The Secretary of State's Certificate and list;
(f) The Statement of Need;
(g) The Statement of Evidence, including the names of witnesses to be called; and
(h) The names of BCD personnel who will represent the agency.

The documents were available for inspection at the Office of Hearing Examiners from the date of filing to the date of the hearing.

5. The record remained open through December 20, 1977 for the receipt of written comments and statements.

6. Pursuant to Minn. Stat. § 15.0412, subd. 4, both the Hearing Examiner and the BCD requested that a 90-day extension be granted to complete the report on this matter. The Chief Hearing Examiner ordered that an extension be granted through March 20, 1978.

7. Statutory authority to promulgate the proposed rules is contained in Minn. Stat. §§16.851 (1976)and 16.86, subd. 4

(1977 Supp.). Minn. Stat. § 16.86, subd. 2 (1976), gives authority to the BCD to incorporate by reference absent compliance with Minn. Stat. § 15.0412, subd. 4 (1977 Supp.).

8. Because of the length and technical nature of the proposed rules, there were many clerical and wording mistakes in the published version. The BCD proposed to correct these errors and submitted the following "errata" at the time of hearing:

Page 1:

Item 2(c), third line ANSI 17.1e-1974, should read ANSI 17.1c-1974.

Page 2

Item 5 add the following: identified as 2 MCAR § 1.90450 and related definitions in 2 MCAR § 1.90103.

Page 5:

SBC 103 - Add the following to the definition of municipality: Town shall be further defined as a town meeting in the requirements of Minn. Stat. § 368.01.

SBC 104 - First paragraph, second line, change the word "city" to "municipality".

Third paragraph, second line, add a second "p" in the word "appendix".

Page 6:

SBC 107 - Second paragraph, fourth line, add an "e" in "thereof".

Page 8:

SBC 109(b)3 - Add the letter "n" in "Appendices".

Page 21:

SBC - top of page, add the number "III".

Page 22:

UBC 420, following the definition of Class "A" supervised living facilities, add the following: See UBC 1301 as amended. UBC 420, following item 2, definition of Class "B" supervised living facilities, add the following: See UBC 901 as amended.

Page 23:

UBC 605, fourth line, after the word "than", insert the following: one-tenth of the total floor area, and natural ventilation by means of openable exterior openings with an area of not less than . . .

Page 26:

UBC 901, Division 2, Change the " " to an ")".

UBC 902(b), second paragraph, add an "m" to the word "accommodating" (both cases). Also change the "more than five" to "five or more".

Page 27:

UBC 905, Change "SBC 7720" to "the mechanical code".

UBC 909 - Add an exception following the second paragraph to read: Exception: Alarm systems may be installed in accordance with NFPA 101, 1977 Edition, § 10-3.3.3.

Page 28:

UBC 1005 - Change "SBC 7701 through 7736" to "the mechanical code".

Page 29:

Second paragraph, beginning in line four, delete the following: with an additional 50 square inches in area for each additional toilet facility.

UBC 1105 - Change "SBC 7701 through 7736" to "the mechanical code".

Page 31:

Middle of page - add the following "and UBC 510".

Page 32:

UBC 1205 - Third paragraph, delete the extra "ne" in the word "requirements"; also delete "UBC 510 and".

Page 33:

UBC 1305(b) - Fourth paragraph, add the words "and UBC 510".

Page 35:

In left-hand column, delete all name reference to occupancies (i.e., assembly, school, institutional, industrial-high hazard, etc.)

Page 50:

Change the heading to read as follows: Section 3303(a) of the UBC, second paragraph, is amended to read as follows:

Page 51

Paragraph #2, last sentence, the word "entire" is misspelled.

Page 79:

SBC 8601 - Delete item 3 and renumber the rest of the column.

Page 85:

Item 6 - Change the letter "e" to number "3"; underline 3 P or 30.

Item 10 - Add the word "and" between "5M" and "fitting".

Item 13 - Add the word "number" between "Minimum" and "of"; also, (1) add the following to the end of the sentence "as amended in SBC 111."

Page 87:

Amendments submitted by S. D. McCullough and recommended by the Council on Plumbing Codes and Examinations was printed in error. The following is the corrected proposal:

MHD 123(d)(9)(ff) Plastic 6A or 6B with corresponding fittings may be installed except that no ~~stack or~~ horizontal drain may exceed 35' in total length. No stack may exceed 35 feet in total height unless an approved expansion and contraction joint is installed at intervals not to exceed 35'.

MHD 123 (d)(11)(hh) Plastic 6A or 6B with corresponding fittings may be installed except that no ~~stack or~~ horizontal vent may exceed 35 feet in total length. No vent stack or stack vent may exceed 35 feet in total height unless an approved expansion and contraction joint is installed at intervals not to exceed 35 feet.

MHD 124(a)(2)(mm) Plastic Joints. Every joint in plastic piping shall be made with approved fittings by either solvent-welded or fusion-welded connections or with approved insert fittings and metal clamps and screws of corrosion-resistant material or threaded joints according to accepted standards. All solvent materials must meet approved recognized standards. Expansion and contraction joint materials and dimensions shall conform to ASTMD-2661 or ASTMD-2665 and shall be of an approved type.

Page 88

SBC 8806-1. Second line, ANSI-17.1-97 should read ANSI 17 1971; fourth line, change "e" to "c" and delete the word "and". Fifth line add the words after 1975 and ANSI A17.1g-1976".

Page 90:

Top of page - change the word "hatch" to "vent".

Item 7, second line - delete the letter "d" from the word "card".

Page 95:

Action: Change the reference SBC 110(a).2 to SBC 109(b).2.

4102 - Delete the letters "H" and "I" in the Group designations.

9. The composition of the State Building Code (SBC) is delineated in the first section of the Code. This includes other codes which are adopted by reference. A Table of Contents

briefly states the subject matter contained in the Code.

10. SBC 101 Title. This section indicates that the rules and standards adopted by reference are collectively known as the Minnesota State Building Code.

11. SBC 102 Purpose and Application. There is a need to provide uniform standards to safeguard life and limb, health, property and public welfare for all buildings and structures so that the application and enforcement on the state-wide basis will lend itself to accomplishing that need.

12. SBC 103 Definitions. Definitions are provided so that there can be a common understanding of both the language used as well as certain statutory terms commonly used by persons working with the code.

13. SBC 104 Scope. This section generally identifies what elements of construction and occupancy uses are provided for by the code with certain exceptions.

14. SBC 105 Fallout Shelter. This section is included in the code to provide a vehicle for the Technical Requirements for Fallout Shelters when the need is determined by the Department of Public Safety, Division of Civil Defense and the State Architectural Engineer

a. Herbert Meyer suggested that the Fallout Shelter requirements be relettered as Appendix A because there is no Appendix A.

15. SBC 106 State-owned Buildings. The need of this section is to identify such buildings that would come under the exclusive jurisdiction and custodial control of one or more state departments or agencies.

16. SBC 107 State Plan Check Fees. When the Building Code Division is requested to make a check of plans and specifications by a municipality or individual for projects that would not otherwise require review by the Division a need for recovering a portion of the cost involved has been established by the schedule incorporated in the document.

17. SBC 108 Disclaimer Clause. This clause is needed so that any inclusion or reference to any proprietary equipment, material or method of installation is purely coincidental. The authority for such determination will be found in the various licensing ordinances for each type of vendor who performs the work.

a. The BCD proposed to amend SBC 108 by adding the words statutes or between the words "licensing" and "ordinances" for clarification purposes.

18. SBC 109 Appendices. This section identifies the appendices that are declared as a mandatory portion of the code, and the remaining appendices may be adopted without change and enforced by any unit of local government.

a. Herb Meyer suggested that the appendices set out in SBC 109 be renumbered and relettered as follows:

SBC Appendices (a) Item 1, should be changed to read:
1. SBC 111 Appendix A, Technical Requirements for Fallout Shelters, SBC 110, Appendix B, Variation in Snow Loads.

SBC Appendices (b) Item 1. The letter "B" should be changed to "C".

SBC Appendices (b) Item 2. The figure "41" should be deleted.

SBC Appendices (b) should have additional Item No. 5. entitled A. SBC 111 Appendix "D" Building Security--Chapter 41 and Building Security Standards 41-1. and 41-2.

19. SBC 110 Flood-Proofing Regulations. These rules and regulations are adopted by reference and have been amended where necessary to reflect the needs in the State of Minnesota. It is important that regulations be imposed in floodplain areas of the state to provide a measure of safety and control and to make these areas eligible to purchase insurance for building construction in such areas.

20. SBC 111 Adoption of the Uniform Building Code by Reference. The adoption of the Uniform Building Code, 1976 Edition, will bring into the field of code application and enforcement the current uses of materials and methods of construction

that is compatible with the nation as a whole. There are, however, certain items which require amending in order to reflect legislative mandates or changes to the code that have been previously a part of the code and the necessity of maintaining the requirement in the adoption of the 1976 Edition of the UBC to reflect the continuity of certain items which are regional in nature and have been demonstrated to be necessary for the State of Minnesota. (The amendments proposed by the BCD to the UBC are dealt with individually below in Findings 21 through 62.)

a. Herbert Meyer commented on SBC 111 as follows:

> Adoption of the Uniform Building Code. Although this section states "Chapters 1 through 60 and the Appendix of the 1976 Edition of the Uniform Building Code, hereinafter "UBC" as promulgated by the International Conference of Building Officials is incorporated by reference and is hereby made a part of the State Building Code (SBC) except as qualified by SBC 109. Chapter 60 is an adopting ordinance as recommended by ICBO. I don't believe the law permits the Commissioner to adopt an ordinance. Also, since the Standards are published in a separate document, the Standards should be expressly mentioned in the first paragraph of SBC 111 by referring to "The Uniform Building Standards outlined in Section 6002 of the 1976 UBC" or similar language.

b. The BCD responded as follows:

> We have examined § 6001 of Legislative Chapter 60 and believe that a statement of validity is necessary in the adoption of the codes. We would like to offer the following solution to an objection that was raised in the adoption of this chapter by Mr. Meyer on November 29 and found on pages 171 and 172 of the hearing transcript.
>
> As a possible solution to the problem, we would propose that UBC 6001 be deleted in its entirety and a new § SBC 112 be established which would read as follows:
>
> SBC 112 Validity. If any section, subsection, sentence, clause or phrase of this code is, for any reason, held to be unconstitutional, such decision shall not affect the validity of the remaining portions of this code. It is hereby declared that this code would have passed and each section, subsection, clause or phrase thereof, irrespective of the fact that any one or more sections, subsections, sentences, clauses and phrases be declared unconstitutional.
>
> We would also change the word "ordinances" in UBC § 6002 to the word "Code", thus § 6002 would read: The UBC Standards which are referred to in various parts of this [ordinance] Code shall be the Uniform Building Code Standards, 1976 Edition, and are hereby declared to be a part of this [ordinance] Code.

This should clarify any problems that have been raised and still provide for the complete function of the code and the book of standards which is a vital part of the Uniform Building Code.

21. UBC 104(j) This item was a total amendment to the 1973 UBC and is now a part of the 1976 Edition with the exception of the proposed item 5 which is part of the original amendment.

22. UBC 204 This amendment is changing the last sentence of this section so that a copy of all appeals and the decisions made by the unit of local government must be filed with the State Building Inspector for his acceptance or challenge.

23. UBC 303a This amendment is necessary to allow each unit of local government to establish its own fee schedule for the permits it issues. These costs can be increased or decreased as dictated by the needs of the community.

24. UBC 420 These definitions are necessary to make the occupancy designation for these supervised living facilities as licensed by the State Department of Health compatible with the classification of similar functions in the 1976 UBC.

25. UBC 501, Table 5-A This change amends Table 5-A to incorporate the supervised living facilities as defined in UBC 420.

26. UBC 605, 705, 805, 905, 1005, 1105, 1205, 1305 and 1405 All reflect a change that incorporates an amendment that is found in § 1711(h) which establishes a matrix setting apart from the minimum requirement for sanitation facilities for all occupancies addressed in the code. These sections, except 1305 and 1405, have also reduced the light and ventilation required in these occupancies from 1/8 or 12 1/2% to 10% of the floor area with 1/20th of the area openable. This reduction will afford a better control of energy conservation in building design. These changes are needed so that uniformity in the code requirements may be maintained.

a. The BCD proposed to amend Table 17-B, Required Sanitation Fixtures, by:

(1) deleting the definitional terms for each occupancy type as the classification itself does identify it;

(2) changing the square-foot requirements for Group E Occupancies to 85 for elementary and 130 for secondary;

(3) deleting the line under Industrial-High Hazard;

(4) adding the words one in each exercise room in the water closet column behind prisons and jails; and

(5) deleting the language in the water closet column under churches, other, and factories, warehouses and sales offices, and replacing it with the number 3 in parentheses.

b. The Department of Education proposed to amend Table 17-B in order to make it uniform with education requirements by changing the Group E elementary girls water closets to one for each 30. Also, to exempt Group E from footnote 3 as the alternative suggested is not allowable in schools. The BCD concurred in these amendments.

27. UBC 802(c) This change is proposed as was previously contained in the 1973 Amendments to the UBC. The change permits classrooms for children in School Grades 1 and 2 to be located in rooms above the first floor level as this is compatible with guidelines established by the State Department of Education.

28. UBC 809 This section has been amended to identify the NFPA standard for the installation of the protective devices. It sets apart some definite guidelines for an approved alarm system. This amendment is the same as was adopted for the 1973 UBC and has been updated to provide for current printed standards.

a. Herb Meyer commented on UBC 809 as follows:

> UBC 809. Change the figure "74" to "75" so that the sentence would read "The fire alarm system shall be installed in compliance with NFPA Standard 72-A-75, 'Local Protective Signaling Systems.'" As the above is written, I believe it is a standard that should be adopted as a reference item. It is 32 pages long and would be costly to reprint.

29. UBC 901 The amendments contained in this section, Division 1, change the years of age to under kindergarten age,

OUR FILE NO. 458

ADMIN 1000 (Rev. 1/78)

STATE OF MINNESOTA

DEPARTMENT Attorney General

Office Memorandum

TO : Sheila S. Fishman
Special Assistant
Attorney General

DATE: August 22, 1978

FROM : J. Michael Miles
Assistant Attorney General

PHONE: 296-6555

SUBJECT: Rules as Approved - Adoption of Amendments to the State Building Code

Enclosed herewith are the rules you have submitted for approval. These rules have been approved by this office and filed with the Secretary of State. Note that they have NOT been filed with the State Register; this must be done promptly by your agency.

Upon receipt and before transmittal to your agency, however, it is important that you recheck these rules as to:

1. Affixation of the stamps of the Attorney General and Secretary of State to the last page of the rules;

2. Coverage by these stamps of all rules submitted; and

3. Inclusion of all pages of the rules in the approved set.

Directly following the approved rules is a complete set of required documents and transcript which must be retained with the rules by you or your agency.

If you have any questions in this regard, please contact me.

JMM:mb

Enclosure

cc: Duane Harves

and in Division 2, provides for the inclusion of Class B, supervised living facilities. This is the same as was amended in the 1973 code.

30. UBC 902(b) The exception has been deleted because the requirements for licensing of these facilities by the Health Department and the applicability of certain funds do not permit buildings of combustible construction to be used for such occupancies. This section was also deleted from the 1973 Edition of the UBC by amendment.

31. UBC 905 For the light and ventilation changes, see the previous comments to the "05" sections of the Code. A reference is also included to refer to the State Mechanial Code for ventilation requirements for such occupancies.

32. UBC 909 An additional sentence has been added to this section to indicate that the alarm system must comply with the same criteria that has been established in a previous section so that uniformity may be maintained in the requirements of the Code.

a. Herb Meyer proposed the following amendment to UBC 909:

> UBC 909. Add a sentence to the second paragraph as f follows:
>
> "Operation of any fire alarm activating device shall automatically, without delay, accomplish general alarm indication and control functions. Zoned, coded systems shall be permitted to be used." This would be a substitute for the errata correction noted at the hearing.

33. UBC 1005 For the light and ventilation changes, see the previous comments to the "05" sections of the Code. A reference is also included to refer to the State Mechanical Code for ventilation requirements for such occupancies.

In the third paragraph of this section, the third line, the one cfm per square foot is reduced to 3/4 cfm per square foot. The 1973 UBC does not contain such a provision, but the State Mechanical Code has had the requirement for 3/4 cfm per square foot since its inception, and it has created no problem in providing adequate ventilation for these occupancies.

34. UBC 1105 For the light and ventilation changes, see the previous comments to the "05" sections of the Code. A reference is also included to refer to the State Mechanical Code for ventilation requirements for such occupancies. The change in the ventilation requirements is the same as for UBC 1005 above. An additional provision is added to this section granting the Building Official the authority of accepting an alternate system to the basic requirements of the Code provided the specified alternate design is complied with.

35. UBC 1109 This section is added to the Code to satisfy legislative action in amending Minn. Stat. § 16.85, subd. 1 (1976), second paragraph.

a. The 3M Company commented on UBC 1109 as follows:

> The 10'6" height clearance for commuter vans would be excessive. 7'6" or 8'0" would be adequate for all vans used for the transportation of employees. The very small amount of small buses or stand-up vehicles could be handled with a few spaces adjacent to parking ramps. 3M is a leader in this field and is qualified to speak on this amendment.

36. UBC 1205 This section refers to Section 1105 as meeting the intent of the light and ventilation provisions.

37. UBC 1301 The assignment of Class A supervised living facilities has been made to this occupancy classification and is included here for continuity of Code application.

38. UBC 1305(b) This section specifies sanitation requirements for buildings generally and refers to specific requirements set out in UBC 1711 and 510.

39. UBC 1314 This section makes the inclusion of Appendix Chapter 35 mandatory for STC and IIC control in all Group R Division 1 occupancies. This item has been a previous part of the Code.

a. The Minnesota Department of Health commented on UBC 1314 as follows:

> The referenced chapter 35, § 3501, requires sound transmission control assemblies "separating dwelling units or guest units" in Group R Occupancies.

The proposed amendments, UBC 420 and UBC 1301, include Supervised Living Facilities, Class A in the Group R Occupancy.

It is requested by the Department that an exception to the sound control requirement be included in the amendments for supervised living facilities, Class A.

This request is based on the argument that the residents in these homes are not "guests" of an independent or transient nature, but a part of a supervised family-style living situation. The request is also an attempt to get into the written body of the amendments an interpretive agreement between this Department and the Building Code Division which has been followed in the past.

b. The BCD has already stated in a responsive memo to the Health Department that the occupants of SLF's would not be considered guests.

40. UBC 1315 This provision affords an added amount of security for these Group R Division occupancies. This provision has been in the Code since its inception and is felt necessary because of the reason stated above. If Appendix Chapter 41, as proposed, is accepted and adopted by a unit of local government, then the most restrictive measure would apply. This section, as placed in this portion, makes the provision mandatory in all cases where Appendix Chapter 41 would not be adopted.

a. The City of Minneapolis suggested the following amendment to UBC 1315:

On Page 33 of the Hearing Document in the section entitled UBC 1315, Deadbolt Locks Required, I would suggest the word "public", where it appears in the first line, be stricken and the word "shared" be inserted. This suggestion is based on Department Legal Counsel's opinion that perhaps hallways and other communal areas are not public if the building has a security system and he has so advised us to amend our local ordinances.

41. UBC 1401 This amendment adds a new residential occupancy classification to the Code. This is adopting by reference the One and Two-Family Dwelling Code as a complete document which may be used by builders and developers of such residential structures. When this code is used for such construction, no other elements of the State Code will apply for SBC 2 MCAR 1.16001 through SBC 2 MCAR 1.16006.

41a. The Minnesota Department of Health commented on UBC 1401 as follows:

> We strongly urge that the proposed code be revised to make § 1401, the One- and Two-Family Dwelling Code, conform to the Minnesota Plumbing Code. The revision should read as follows:
>
> Page 33: "Section 1401, add the following paragraph:
>
> Group R, Division 4 Occupancies: This group shall include all one and two-family dwellings built ~~exclusively~~ by the standards as established in the 1975 One and Two-Family Dwelling Code as promulgated by the national model code organizations, except that such construction shall comply with applicable provisions of the Minnesota Plumbing Code."
>
> We oppose the Building Code revisions as proposed for the following reasons:
>
> (1) The Minnesota Plumbing Code was originally adopted in 1933. The version of the Code which is currently in effect already has provisions governing plumbing in one and two-family dwellings. The imposition of new and different provisions in the State Building Code, some of which are in direct conflict with the existing Minnesota Plumbing Code, would create much confusion and unpredictability in inspections and enforcement. State and local plumbing inspectors would be enforcing the Minnesota Plumbing Code while state and local building inspectors would be enforcing the State Building Code with its conflicting plumbing provisions.
>
> (2) The net effect of the proposed State Building Code revision is to repeal certain conflicting provisions in the Minnesota Plumbing Code. Since effectively, repeal is one consequence of the proposed revision, this repeal should have been justified by the Commissioner of Administration in the Statement of Need, as required in Minn. Stat. § 15.0412, subd. 1 (1976), and the rules of the Hearing Examiner. Yet in the Statement of Need section discussing § 1401, there is no such justification. There is not even an acknowledgment of the fact that the proposed revision will have such an effect.
>
> (3) Since the Commissioner is proposing to adopt new plumbing provisions in the proposed revision, the Statement of Need should contain evidence of the fact that there is need for such new provisions, and that the language of the proposed revision meets that need. The Statement of Need contains no such justification.
>
> (4) The Advisory Council on the Plumbing Code and Examinations is a council created by law and empowered to advise the Commissioner of Health on changes in the Minnesota Plumbing Code. Minn. Stat. § 326.41 (1976). At its meeting of May 23, 1977, the Council challenged the merits of the proposed State Building Code revision and voted to recommend deletion of Section 9 (Plumbing Section) from the proposed One- and Two-Family Dwelling

Code. This recommendation was forwarded to the staff of the Building Code Division, yet the writers of the proposed revision have not addressed this opposition to their proposal.

The Commissioner of Administration has not adequately informed those who will be affected by the adoption of the proposed revision, i.e., contractors, plumbers, homeowners, of which provisions should apply, nor has he informed them of why certain provisions should apply. Therefore, the fundamental requirements of need and proper notice in rulemaking have not been met.

Since adoption of the proposed revisions will create much needless confusion, and because statutorily prescribed administrative procedures have not been met, the proposed State Building Code revisions at issue here should not be allowed to go into effect. Rather, we strongly recommend that the revision suggested on Page 1 be adopted.

b. The BCD responded as follows:

Item 2. UBC Section 1401. Occupancies Defined. This amendment adds a new occupancy classification to this section and identifies it as a Group R, Division 4 Occupancy which shall include all one and two-family dwellings built exclusively by the 1975 One and Two-Family Dwelling Code.

The drive to have the One and Two-Family Dwelling Code adopted by communities or states is constantly being addressed by national organizations such as NCSBCS - National Conference of States for Building Code Standards (Minnesota is a member of this Organization), Manufactured Housing Association, National Association of Home Builders, and locally the Metro Council's Modest Cost Housing Study has recommended that this code be adopted.

Some have claimed that the adoption of this Code will create a dual standard for the construction of housing. This may be true but it does offer a one-book approach to the use of a code for this industry except for the energy code requirements and the differences between the One and Two-Family Code and the UBC, the State Plumbing Code and the State Mechanical Code are miniscule as they relate to housing application. The Building Code Division being the progenitor of this amendment naturally favors its inclusion in the State Building Code.

Upon further examination of the One and Two-Family Dwelling Code, we find that there are two items that we would propose being deleted.

1. Chapter 25 deals with "Sewers and Private Individual Sewage Disposal Systems". We would propose that the references to private or individual sewage systems be deleted from this chapter because they are not subject matter of the State Building Code and the Health Department and the Pollution Control Agency of the State has guide lines which must be followed for such installations. The Health Department and Pollution Control Agency requirements are much more detailed than those found in this code.

2. Part VI identified the excerpts from the National Electrical Code NFPA 70A-1971 as being the Electrical Code for use with this One and Two-Family Dwelling Code. The State Electrical Board and the Building Code Division have adopted the NFPA 70-1975 as the Electrical Code for the state and the inclusion of this section would be repetitious as well as referring to an older edition of the National Electrical Code.

42. UBC 1711(b) This amendment reflects only the first paragraph of this section and deletes the remaining portion of item (b). The remaining portion that is deleted deals with requirements for the physically handicapped. Inasmuch as Minnesota has its own regulations for the function these items in the UBC would be in conflict in most cases and therefore should not be a part of the State Building Code.

43. UBC 1711(h) This amendment to the Code is to continue in force provisions which have been in the State Code for a period of time and establish a matrix to indicate sanitation facilities that must be provided for all occupancies. Some of the square foot per occupant figures have been changed to reflect a more realistic occupant load for the types of uses. (Proposed amendments to the matrix were discussed in Finding 26.)

44. UBC 1807 This is an amendment to the UBC 1976 which was approved by ICBO at their annual business meeting in September, 1977. We are recommending inclusion of this item at the present time because it provides for more reasonable requirements to be imposed when buildings are constructed. Occupant life safety must be the prime concern of all designers and builders of this type of structure.

The refined language of the amendment after years of study since the original introduction of the Hi-Rise requirements into the Code is more acceptable to the Building Officials and Fire Officials alike. This amendment will become a part of the 1979 Edition of the Uniform Building Code.

a. Both the Building Owners and Managers Association (BOMA) and LWSM Engineers, Inc., raised many concerns about the content of UBC 1807. These concerns include:

(1) impracticability of water flow devices on every floor - (c)1.;

(2) possible danger of automatic voice instructions - (e)1.;

(3) the appropriateness of having warning signs in elevators rather than next to corridor elevator buttons - (h)3.;

(4) danger of eliminating the manual fire alarm system; and

(5) the unreasonableness of water column calculations (j)3. and (m)6.

b. The BCD responded as follows:

Item 3. § 1807. This amendment is commonly called the Hi-Rise amendment because it has its application to buildings more than 75 feet above the lowest fire department access.

The language of the proposed amendment was approved with some slight revisions at the annual meeting of ICBO in 1977. We have included it in the hearing at this time because we believe that the changes in this section are much needed to provide for a better guidance in the design and protection of such building than that which has been in the previous codes.

The Building Code Division proposed this amendment and strongly supports its inclusion in the adoption of these amendments.

c. Herb Meyer commented on UBC 1807 as follows:

UBC 1807(c). If UBC § 2312(a) is adopted as proposed on Page 47, Minnesota would be in a Zone "0" No Damage Area with reference to Seismic Zones. This would be the way it has been in Minnesota since the first adoption of UBC in 1971. Therefore, Item No. 2 should be deleted as it would not apply in Minnesota.

UBC 1807K. Seismic Considerations. This section should be deleted and a notation should read "no requirement." This would eliminate renumbering other sections and eventually correspond to the 1979 UBC printing.

45. UBC 2305(d) This amendment is resubmitted to the 1976 UBC in order to provide the design criteria for snow loading across the state. It also takes into consideration the requirements for differential loading and snowdrift load configurations and some load failures have occurred to predicate the retention of this amendment in the Code.

a. Herb Meyer suggested that the Appendix C references be changed to Appendix B.

46. UBC 2312(a) After a study and review of the seismic requirements in the code for the State of Minnesota, the Structural Subcommittee of the Building Code Standards Committee recommends that the State be placed in a Seismic Zone "0" No Damage Area as identified in Chapter 23 of the code. Even though there has been a tremor in the recent past, the design considerations for wind loading will, for the most part, outweigh the seismic design requirements. Minnesota has been classified either by code or code amendment since the inception of the code in Seismic Zone "0", and the Committee feels that there is no immediate problem in remaining in that classification.

47. UBC 2907(a) This amendment establishes the frost depth zones for footing depth requirements in the State of Minnesota. This is a previous amendment and is retained to maintain a continuity in the requirements for the footing designs.

a. The City of Minneapolis commented that Lyon County was omitted from the Zone II counties.

b. The Soil Exploration Company suggested that the heading for UBC 2907(a)2 be changed to read "Slab-on-Grade-Construction" for the purpose of clarity.

48. UBC 3205(c) The last paragraph of this section is deleted by this amendment. The paragraph deleted would prohibit the use of eave or cornice vents in most roof structures of residential occupancies. The atmosphere or climate conditions experienced in the State of Minnesota require adequate ventilation of attic spaces. Although the application of the provision would deter the spread of fire through combustible attics, the problems created by inadequate ventilation would be far more prevalent in an area where the temperature varies as greatly as it does in the State of Minnesota which would create a multitude of condensation and resultant deterioration problems.

49. UBC 3303(a) This section is amended to include the requirements for a door meeting the minimum width and height for exit doors that serve dwelling units or guest rooms within a

structure as well as the requirement for the primary entrance/ exit door. This would provide for adequate egress in emergencies as well as better mobility when moving furnishings through the door openings.

50. UBC 3304(h) Exception number 2 is added to this section to permit an alternate method of construction for openings in corridors when certain other criteria is met. This provides for the construction of skyway systems and mall corridors to serve the area by providing a certain amount of openness. This exception is in the present code and is worthy of continued consideration.

Exception number three is deleted from the amendments because of the availability of door-closing hardware that will allow the corridor doors on Group I occupancies to be free-swinging and close automatically when emergencies such as smoke or fire is detected and an alarm situation is indicated to the control devices.

a. A great deal of opposition was raised as to the deletion of exception number three from the amendment to UBC 3304(h). The current exception number three reads as follows:

> 3. In Group D Occupancies in which an approved complete standard automatic fire extinguishing system is installed, corridor doors serving sleeping rooms need not be maintained self-closing or be automatic closing.

Deletion of this exception will mandate that all new construction of Group D occupancies (most noticeably hospitals and nursing homes) must include self-closing or automatic closing doors on all patient or resident rooms.

The Examiner received many letters and petitions from nursing home residents and staff expressing adamant opposition to automatically closing doors. The major concern expressed was the "fear" of a resident being confined to a room with a door which remained closed at all times. That is not the case, however. Newer models of automatically closing doors can be opened and remain open at almost any degree.

The second major concern was that of cost. Nursing home administrators argued that health care and construction costs are rising very rapidly. To add several hundred dollars onto every new patient room would be unreasonable. Mr. Herb Meyer testified that if this exception is deleted, existing Group D occupancies may be forced to comply with the new requirements. Cost per door figures run from four to seven hundred dollars. However, Rixon-Firemark, Inc., stated that the extra expense per door could be as low as 50 dollars.

The third major concern was that of patient and resident safety. In nursing homes, many elderly residents are in wheelchairs or use canes or walkers. They are unable to move very fast. If the doors should automatically close because of a fire or a fire drill (Mala Strana Nursing Home stated they must conduct twelve drills per year), a resident or patient could be caught in the door or knocked down causing injury.

A fourth concern is that of the traumatic effect that an automatically closed door, in conjunction with a fire or fire drill, would have on a resident or patient. There is also the problem of a fire in the room of a non-ambulatory person triggering all the door-closers, and the staff then being unable to locate the fire.

b. The Minnesota State Fire Chiefs Association commented as follows:

Section 3304(h)

> In the second paragraph, an exception should be made to the requirement of maintaining self-closing or automatic-closing doors when the building is sprinklered in its entirety, and this would be for all occupancies. The requirement of having self-closing doors is to reduce the hazard of smoke to individual rooms; however, except in the area of origin of the fire, there is no documented evidence to support the requirement for self-closing doors for a fully-sprinklered building. They should, therefore, be made optional. I fully believe that the benefit gained by having doors open, especially in nursing homes and hospital occupancies exceeds the negligible benefit gained by having the doors closed. There has never been a recorded death in a hospital or nursing home that is completely sprinklered with or without closing-doors except in the area of origin of the fire, and these few can be counted on one hand.

c. The Minnesota Department of Health stated its opposition to the amendment as follows:

> This is to register the Department's continued opposition to door-closers on patient room doors.
>
> The NFPA Life Safety Code No. 101, chapter 10, for institutional occupancy does not require door closers on patient room doors. It is our opinion that since the Life Safety Code was selected by the U.S. Congress for inclusion in its laws for medical assistance and reimbursement, and since it represents consensus standards by fire safety authorities on a national scale, the Life Safety Code standards adequately protects patients and residents in health care facilities.
>
> In addition to the basic objection related to the necessity for such door-closers, there remain further concerns about their usefulness for bedroom doors:
>
> (1) The need for expensive, sophisticated devices to hold doors open and at any desired angle when not activated.
>
> (2) The necessary pull to open the doors exceeds what can be managed by many old or handicapped patients.
>
> (3) When closing, doors might cause falls of patients who are old or inform.
>
> (4) A critical rescue delay, caused by time lost in locating the room where fire might have originated.
>
> (5) The difficulty of evacuating patients from bedrooms when doors have been activated to close and to remain in a closed position.
>
> (6) A maintenance problem that eventually might result in a breakdown of the system.
>
> (7) Unlike the SBC, the Life Safety Code requires a system of smoke detectors to be located at 30-foot intervals in all corridors or in each patient bedroom.
>
> The Battle Lake Nursing Home chose to provide closers with automatic hold-back release devices on all bedroom doors. Six months after it opened in September, 1975, three of the closers were inoperable. Later inspections by this Department indicate that only 50 percent of the hold-back devices are operable at this time, resulting in doors being held open by wedges. Although the State Building Code by regulation may force the installation of door-closers, it does not presently have an inspection program to assure continued enforcement of its requirements.
>
> However, the Department wishes to inform that the Life Safety Code does require closers on doors to rooms or areas that are considered to involve contents or activities of a special hazardous nature.

> Such areas include: soiled linen rooms; paint shops; trash collection rooms; and rooms or spaces, including repair shops, used for the storage of combustible supplies and equipment in quantities deemed hazardous.

d. John G. Degenkolb, fire protection engineer and code consultant, stated that sprinklers alone do not protect occupants in the case of a slow, smoldering fire. He contends that "In a review of actual fires in hospital and nursing homes as published in NFPA Journals from 1970 to 1975, the preponderance of deaths from such fires was caused by smoke inhalation, not the actual fire." The automatically closing door will seal off rooms and eliminate the smoke inhalation hazard.

e. In response to a letter from Reading Door Closer Corporation, Lawrence Willoughby, Vice President of Conva Indemnity Company, wrote:

> I cannot address myself to the quality or efficiency of operation of your product, however, I can attest to the value of its function. As I mentioned in our telephone conversation, I was with another Insurance carrier when they incurred a severe nursing home fire here in Ohio. Subsequent investigation of the fire including slides taken by the carriers' engineering staff graphically demonstrated the value of having patient room doors closed in event of fire.
>
> "Smoke" killed thirty some patients in this fire. "All" deaths occured (sic) in patient rooms where the doors were open at the time of the fire. "All" patients in rooms with the doors closed survived.
>
> You had requested my underwriting opinion as to premium-rate deviations I would consider for nursing homes equipped with life/safety door closing devices. This is a judgement factor, but I would certainly consider credits in the 5% to 20% range appropriate for both Property and Liability, depending upon the particular system.

f. Gene Torrey, assistant director of buildings and grounds at Abbott-Northwestern Hospital, proposed that exception number 3 be reinserted in UBC 3304(h) with a proviso that the "complete system" not be found incomplete because of the unprotected areas specified in UBC 3802.

51. UBC Table 33-A This column and the corresponding footnotes to this table are deleted because the access/egress requirements are included in amendment UBC Chapter 55 of the code.

52. UBC 3318(c) An additional paragraph is added to this section to reduce the self-closing or automatic closing requirements for corridors that serve areas in Group I occupancies where the use of such doors would be under a controlled condition at all times. This normally applies to situations where the person's liberty would be restrained.

53. UBC 3801(c) This amendment is added to the definitions of this section to describe the type of standpipe. This section is currently an amendment to the code and is retained to provide for continuity and uniformity of life safety provisions.

54. UBC 3802(b)5 Exception number two has been an amendment to this section and is retained as an amendment to the UBC 1976 to permit the omission of automatic fire extinguishing equipment from certain rooms when detectors of products of combustion are installed in such rooms. This exception is only applicable to buildings of Type II - one-hour construction.

55. UBC 3802(d) This amendment is retained from the previous amendments and is necessary to assure that in occupancies where commercial cooking equipment is installed, the proper types of fire extinguishing systems are used.

a. Herb Meyer commented on UBC 3802(d) as follows:

> UBC 3802(d)2. I would recommend the NFPA Standard No. 17 be a referenced Standard and that the date should be 1975, the latest published standard, and then would read: "2. Standard for dry-chemical extinguishing system, NFPA No. 17-1975".

56. UBC 3803(a)(b)(c)(d) This section describes the requirements for the installation of the Fire Department Standpipes. This amendment provides for a more ready source of water for fire fighting purposes and will afford a time-saving factor when the need arises. This item has been a part of the State code since 1973 and is retained as an amendment to UBC 1976 Code.

a. Herb Meyer commented on UBC 3803 as follows:

> UBC 3803(a). I would recommend that NFPA Standard No. 14 be a referenced standard and the date be "1976". The item would then read: "General. Fire

Department Standpipes shall comply with the requirements of this section and NFPA Standard No. 14-1976 for Class I standpipes."

UBC 3803(d)2. Change 1974 to 1976 as recommended above.

UBC 3803(d)5. Water Supply. Change 1974 to 1976 as recommended above.

b. The Minnesota Fire Chiefs Association suggested the following amendments to UBC 3803:

Section 3803(b)

An exception should be made to this section. It should be that standpipes may be eliminated in buildings that are fully sprinklered. To require standpipes and sprinklers in buildings such as these is an unnecessary redundancy. Even the regular UBC Building Code does not require standpipes in three-story buildings regardless of whether they are sprinklered or not. It should certainly not be a requirement in buildings that are sprinklered.

Section 3803(d)2

An exception should also be made in this area. The paragraph refers to NFPA #14. This calls for a 4" sprinkler pipe. The exception in this area should be that in a fully-sprinklered building, a 2 1/2" standpipe would fulfill the necessary requirements.

57. UBC 3803(e) This item provides for the installation of a dry standpipe in buildings when it is approved by the local Fire Chief. This item is also retained from previous amendments to the code.

58. UBC 3804(b) This item is retained as an amendment to UBC 1976 from the previous code. It provides for the deletion of a wet standpipe in Education Occupancies and residential occupancies of the Group R Division 1 classification. It also reduces the number of stories' height of 4 to 3 in establishing the requirements as to when they are to be installed. Maintenance and control of these units have been a problem in the deleted occupancies and presents a lesser problem for the fire services.

59. UBC Chapter 50 This chapter is deleted in its entirety, and Sections 301 through 337 of the State Building Code are substituted therein. This section deals with the existing code for manufactured structures and is retained as previously published.

60. UBC Chapter 51 This chapter is deleted in its entirety, and SBC sections 8801 through 8810 are substituted therein. This section of the SBC has been in place since the inception of the code and should be retained to provide for continuity and uniformity of the code requirements.

61. UBC Chapter 55 These are the same items for facilities for the handicapped that have appeared in the code since its promulgation and remains unchanged except for the editorial change for occupancy classification in § 5501(b) and the addition of item number 7 to this section. This chapter in toto addresses the requirements to be met to provide for accessibility and usability of structures and fixtures for the handicapped. This item is retained to provide continuity of the provisions in the code.

a. At hearing, item number 7 of 5501(b) was withdrawn. Nobody spoke in support of the retention of item 7.

b. The BCD proposed that this section be placed in the SBC numbering index (as SBC 5501 through 5508) to make it easier to identify its inclusion in the code.

62. UBC 8601 These items have been added to the list in this section which cross-references various sections of the code where consideration of electrical provisions must be identified.

a. Herb Meyer commted as follows:

> SBC 8601 Item 3. If UBC 512 amended [infra] is retained, then the errata sheet renumbering the iitems should be disregarded. Also, all items that have a reference to SBC 201 should be changed to SBC 111 (items 3, 4, 5, and 16). Item 15 reference to SBC 205 should be SBC 110. In Item 17, the SBC Sections 6001 through 6006 probably should use the same designation as shown in Item 4 of Page 1 of the amendment document or at least cross-reference those numbers.

63. The amendments to the UBC, as proposed by the BCD, have eliminated a current amendment to UBC 512, Roof Access. The BCD supports the deletion as follows:

> UBC 512 Roof Access. This section was deleted from the proposed rules inasmuch as it is a non-code, proprietary item that tends to serve a limited sector of the industry and not of benefit

to the general public. The cost is of little or no benefit to the owner in that the floor area of the structure required for the inclusion of the ship's ladder can be used for no other purpose. The UBC nor the SBC require that such equipment be placed on the roof of the structure. It may be housed within the confines of the building and be made accessible for service. Granted that this as well takes up valuable floor space, but it is usually in the scope of the original design and not required after the fact. The building code statute infers that codes or amendments to the codes be established from nationally recognized model codes or existing statewide specialty codes. This amendment was proposed for inclusion in the Uniform Building Code a few years back and was defeated at the annual code changes meeting by a sizeable margin because of the proprietary application and not a general benefit.

It has not been uniformly enforced by the enforcement agencies since its inclusion into the code and has been a controversial item for many building departments. If the designers choose to use the roof of a structure for a mechanical equipment area, it should likewise provide initially in the design a means by which that equipment may be serviced.

Since this item has been in the code, the enforcement has been at the insistance of the local authority if any provisions are made because the design profession had not generally provided for the accessibility.

a. Herb Meyer proposed to amend Chapter 5 of the UBC by retaining the current amendment, UBC 512. He argued:

This section should remain in the Code because of the need to maintain the equipment described in the section for safety reasons in its operation and for energy conservation. The provision for the guard rail and/or location is for safety of the maintenance crew. The National Electric Code does not require a convenience outlet as stated at the hearing. It does require a ground fault circuit interrupter when such outlets are installed on the outside of a building in the 1975 N.E.C.

b. The cities of Minneapolis, St. Paul and Faribault oppose the elimination of UBC 512. St. Paul made the following comments:

Section 512 relates to roof-top access and is a Minnesota amendment to the 1973 U.B.C. It requires several things not covered in our other codes or at least not very clear.

1. A stairway providing safe access to rooftop-mounted equipment for servicing.

2. Roof edge guard, if equipment is less than 6' from edge.

3. An accessible disconnect switch for each unit of equipment.

4. A serviceman's electrical outlet protected by a ground fault interrupter.

The one item that seems to be in controversy is that of the stairway. Many owners are concerned that an outside stair provides too easy an access by unauthorized persons, and the space inside the building is too valuable to use as a stairway to the roof. However, U.B.C. 512 allows the Building Official to waive any of the requirements for almost any request.

Items 2, 3, and 4 above have, to my knowledge, never been questioned as they relate to safe and easy servicing of the equipment. Equipment malfunction seems to follow "Murphy's Law" and happens more often when weather conditions are abnormal.

The alternative to not requiring a disconnect and serviceman's outlet is shutting off equipment at another location, locking the switch to prevent its being turned on by another, then returning to the roof for servicing. Meanwhile, string a long extension cord to a remote outlet for the serviceman's light and tools. Service could also be done by two persons. Either way, the service would be more costly. One or two service calls would probably pay for the switch and outlet.

The request to keep U.B.C. 512 is made through me by the City of St. Paul and the North Star Chapter of International Conference of Building Officials (an organization of over 300 building officials in Minnesota).

64. Present UBC 1304 and 1404 provide for 48-inch window sill heights with five square feet of opening for Group H occupancies (hotels, apartment houses, dwellings and lodging houses). The 1976 UBC 1304 and 1404 provide for 44-inch window sill heights with 5.7 square feet of opening. Several persons and groups proposed to amend UBC 1304 and 1404 by replacing the number 44 with 48.

a. Cyril Reinert, Building Codes Chairman of the Minnesota State Home Builders Association, commented as follows:

I am writing as chairman of the Building Code Committee for the State Home Builders Association.

There is opposition from builders throughout the state in regard to the Bedroom Window sill height change. The change being from 48" to 44" from floor, and the net openable area from five (5) square feet to five point seven (5.7) square feet, Sections 1304, Apartments, and 1404, Single Family Dwellings.

Bi-level homes and Split-level homes make up the larger percentage of homes constructed because of the cost per square foot of usable floor space. These changes will add to the construction cost of these homes as shown on the enclosed estimate sheet and drawing. With Minnesota divided into Frost Zones, the 60" zone would suffer a substantial cost increase.

Some additional areas of problem would be additional glass for heat loss; additional outside wall area for heat loss; less wall space to arrange furniture or furniture setting in front of windows obstructing the use of window operators on windows of the casement design. The 48" sill height permits most bed headboards to be below window openings and operators. As we do not have control on furniture arrangement, it would appear the design that would allow for the safest conditions, regardless of furniture arrangement, would be the most practical.

We have been unable to obtain any documented information where there has been loss of life or serious injury because of the existing conditions.

b. The BCD stated that either a 44 or 48-inch sill height is acceptable.

c. Herb Meyer stated further:

UBC Section 1401 added paragraph. If the dimension of 44 inches is changed in UBC sections 1304 and 1404, a corresponding change would be required in Section R-211 of the 1975 "one and two-family Dwelling Code".

65. The Minnesota Department of Health stated that the requirements of UBC 1313(i), i.e., that all exterior doors be 20-minute fire rated and equipped with door closers, is unreasonable.

66. Floyd A. Fagerlie, Building Official, made the following comments on UBC 1305(a) and 1405(a):

To challenge the requirement that is promulgated in Sections 1305(a) and 1405(a) "Light and Ventilation" of the U.B.C. 1976 Edition, and corresponding sections in the 1975 Edition of the One and Two-Family Dwelling Code and hereby request an amendment to reduce the required square foot of window area and ventilation in guest rooms, dormitories, and habitable rooms within a dwelling unit. Proposed reduction for natural light to be 8% of the floor area of such rooms (instead of 10%) with a minimum of 8 square feet (instead of 10 square feet). Proposed reduction for natural ventilation in lieu of mechanical ventilation in above rooms to be one-twenty fifth of floor area with a minimum of 4 square feet (instead of one-twentieth with a minimum of 5 square feet). Proposed reduction for natural

ventilation for bathroom water closet compartments, laundry rooms and similar rooms to be one-twenty fifth of the floor area (instead of one twentieth) with the minimum of 1 1/2 square feet to remain the same.

REASON: Reducing the minimum requirements will allow the home owner or builder more flexibility in his design of window arrangements for various rooms in the house by increasing some and reducing others and still be able to meet the building envelope energy requirements. In addition to that, occupants of dwelling units rarely utilize the natural light and ventilation to the maximum that present regulations require. In the case of natural light, they cover the windows with drapes. In the case of ventilation, they rarely more than crack a window.

67. The amendments to the UBC proposed by the BCD eliminate the current amendment to UBC 4701. The Minnesota Lathing and Plaster Bureau commented on this deletion as follows:

We hereby request the continued inclusion of section 4701 with amendment as follows:

"General. The installation of lath, plaster and gypsum wallboard shall be done in a manner and with materials as specified in this Chapter, or as set forth in ANSI A42.2 1971 Specifications for Portland Cement and Portland Cement - Lime Plastering, Exterior (Stucco) and Interior and ANSI A42.3 1971 Specifications for Lathing and Furring for Portland Cement and Portland Cement - Lime Plastering Exterior (Stucco) and Interior, and when required for fire-resistive construction, also shall comply with the provisions of Chapter 43". (End of amendment)

This amendment is very important because of the inclusion of mixes and procedures in this Industry Standard which enables contractors working in the climate of Minnesota to get plaster work done in a manner that will stand up to freeze-thaw cycles and remain structurally sound and water-tight for the life of a building. It clarifies some ambiguous and incomplete areas in the 1976 Uniform Building Code that our Industry has not as yet put in as a proper code change. Hopefully, through our ASTM C-11 Committee, this will be changed before we adopt another Uniform Building Code in 2 years.

Since these are all minimum requirements, we feel the interests of the general public are better served by this amendment because it covers generally accepted good practices.

a. The BCD responded as follows:

UBC 4701(a) General. This section has not been included in the proposed rules because it was felt that the code adequately covers the installation of both plaster and gypsum wallboard. The

proposal as submitted by the Minnesota Lathing and Plastering Bureau only indicates that the ANSI Specifications could be used as an alternate to that described in the code. The code in Section 106 gives the building official the direction of approving alternate methods of construction or materials when these are proven to be equal to that required by the code.

68. The Minnesota Department of Natural Resources proposed that Flood Proofing Regulations, §§ 201.2 through 208.2, be made a mandatory part of the SBC to avoid possible conflicts with other code language and assure administration and enforcement of the code.

69. SBC 304 The items addressed in this portion of the code establish additional criteria necessary for the approval of plans submitted for construction of manufactured structures, evidence of complying with the energy conservation requirements and an increase in seal fees to help defray the cost.

70. SBC 314(c) This item is to be deleted because the requirements for building permits will be the responsibility of local units of government. The state will no longer be requiring building permits and inspections in non-code areas because the laws of 1977 mandate local enforcement.

71. SBC 326(a) The additional sentence to this section is proposed to establish a uniformity in the size of plans submitted to the Building Code Division which provides for more clarity of the drawings as well as ease in storage for such plans.

72. SBC 330(a)11 This statement is added to affirm that these structures must comply with the State Energy Code and evidence of compliance must be submitted as a part of the approval process. This item has not been in the rules on manufactured structures prior to this time.

a. The Examiner points out that because there is no State Energy Code, the necessity of Item 11 is questionable.

73. SBC 335(d) The increase in fees is necessary at this time to help compensate for the ordinary inflation rate as well as the extension of responsibility placed upon the State Code

Division by the application of the State Building Code on a state-wide basis, including farm dwellings which have been exempt prior to the laws of 1977.

The BCD included several items in its proposals which were submitted by outside governmental units or private industry. They are discussed below in Findings 74 through 80 and 82.

74. Sol J. Jacobs, Director of Inspections, City of Minneapolis, proposed to amend UBC 3203 by adding language which:

(1) makes it clear that the entire state is subject to roof ice build-up;

(2) deletes the word "fastened" and substitutes the word applied for the purpose of clarity; and

(3) adopts the standard set out in a document entitled "Manufacture, Selection, and Application of Asphalt Roofing and Siding Products" for an acceptable alternate method.

a. The Petitioner withdrew the ventilation requirements proposed in 3203(d)3 B.

b. Jan Gasterland, representing the city of Bloomington, proposed that UBC 3203(d)3 A. be amended to provide for a single layer of 50-pound felt rather than two layers of 15-pound felt. He stated that the amendment would effectively eliminate any homeowner from attempting to do his own reroofing.

c. The BCD responded to the City of Minneapolis' proposals as follows:

> Item 1. UBC 3203(d)3. This amendment is made to the roof coverings section of the code and adds a sentence that declares all of the state to be subject to roof ice build-up problems. Even though the language may appear to be redundant because of the preceding paragraph, we would have no objection to its inclusion if it provides clarity of the code application.
>
> In UBC 3203(d)(3)(B), the proponent requests that the word "fastened" be deleted and the word "applied" be inserted in its place. In reviewing the balance of this section, the words "installed in an approved manner" "applied in an approved manner", "applied to roofs", fastened to the sheathing, etc., are all used to indicate how installation is to be accomplished. It appears that these terms have a synonymous meaning in the context of this portion, and the proposal seems to be unnecessary.

The proponent further requests amending the section to include a reference to the Asphalt Roofing Manufacturers publication as meeting the criteria for the application of asphalt shingles. The request is that the building official may use such application procedures; however, Section 106 of the 1976 UBC allows for the use of alternate methods of construction and materials when the building official finds that such proposal is at least equal or better than that which is required by the code. It is our feeling that the inclusion of this language to the code is redundant and its permitted use is already addressed in the code when approved by the local building official. We had questioned the proponent's inclusion of the ventilation requirements in this section because it is already covered in Section 3205(c). The proponent indicated at the hearing that they had no objection to deleting that portion of their proposed change.

d. After consideration of the comments made at hearing, Mr. Jacobs submitted the following amended version of UBC 3203(d)(3):

3. Shingle, shake and tile roofs. A. General. Installation shall be in accordance with Table No. 32-B. Underlayment, when required, shall be lapped horizontally and vertically so as to shed water.

In areas subject to roof ice build-up, ~~underlayment~~ eave flashing consisting of two layers of Type 15 felt applied shingle fashion shall be installed and solid mopped together with approved cementing material between the plies extending from the eave up the roof to a point 24 inches inside the exterior wall line of the building.

For shingle and shake roofs, a course of 90-lb. mineral surface rolled roofing or a course of smooth-rolled roofing not less than 50-lb. installed to overhang the cornice from 1/4" to 3/8" and extend up the roof far enough to cover a point at least 12" inside the interior wall line of the building shall be acceptable eave flashing. When the overhang of the eaves requires eave flashing to be wider than 30", the necessary horizontal lap joint shall be cemented and located on that portion of the roof beyond the exterior wall line of the building. Other methods of eave flashing, which will provide equal protection to the building when installed in accordance with the manufacturer's recommendations, may be approved by the Building Official.

The entire state of Minnesota shall be deemed an area subject to roof ice build-up.

Exception: For wood shingle or wood shale roofs, the underlayment shall extend 36 inches inside the exterior wall line of the building.

B. Asphalt shingles. Asphalt shingles shall be ~~fastened~~ applied according to manufacturer's

instructions to solidly sheathed roofs, but not less than four nails per each strip shingle not more than nominal 36 inches wide, and two nails per each individual shingle not more than 18 inches wide shall be used.

Underlayment only may be omitted over existing roofs except where the roof slope is less than 4 inches in 12 inches.

75. The Council on Plumbing Code and Examinations proposed to add the language, and shall discharge above grade, to UBC 3207(c) to allow better identification of roof drainage problems.

a. The BCD stated that they have "no objection" to this amendment.

76. The Acme Awning Company and the City of Minneapolis proposed that UBC 4506(d) be amended by replacing the number "8" with 7 and deleting the last half of the exception provision. The purpose of this amendment is to conform to new building design and to conserve energy by blocking out sunlight.

a. The BCD responded to this amendment as follows:

Item 3. UBC 4506(d). This amendment proposed by the Acme Awning, Mpls., and the Department of Inspection, Minneapolis, seeks to reduce the clearance for awnings above a public walkway from 8 feet to 7 feet. Also the proposal would delete a major portion of the Exception. The State Building Code Division is not in favor of this amendment because of the possible vandalism and damage that could be done to a lowered awning. Other means of offering an energy conservation control on the infiltration of sunlight into a building can be accomplished without that of lowering the awnings to the proposed height. With the multiplicity of heights used in the design of bulkheads for store fronts or office windows, the claim offered by the proponent in testimony appears to be inconsistent with construction practices.

b. Herb Meyer stated:

Amendment to UBC 4506(d). I would oppose the proposed reduction from 8 feet to 7 feet. The proponent stated that it would save energy. That can be done without lowering the awning by covering the store window with a 2-foot or 3-foot temporary canvas cloth. This would keep the sun from shining in the window. Actually lowering the awning to 7 feet would only reduce the line where the sun would shine at approximately 45 degrees (which is prevalent during most of the year) about 10 inches. So a 2-foot or 3-foot canvas placed temporarily on the window

would ensure the energy saving claimed by the proponent and still maintain the same safety which is the reason for the 8-foot clearance required.

77. A number of amendments were proposed by the Council on Plumbing Code and Examinations which dealt with new materials on the market and their acceptance into the code as well as rectifying some items that had been omitted in the Plumbing Code by its recent printing. These amendments, 16 items amending MHD 123, 127, 131, 132 and 133, were also supported by the BCD. These items clarify the existing rules, correct typographical errors and allow the use of alternate materials which meet minimum standards.

a. The BCD stated that there was an additional typographical error in item 2. The number "50" should be changed to 5-0.

b. The Department of Health proposed to amend item 3 by inserting the language or 3D fittings to correct an inconsistency in the code.

c. Anthony L. Scarano, representing the Plastic Pipe Institute, proposed to amend item 9 by incorporating ASTM Standard D2321-74. He stated that the ASTM Standard deals with varying conditions in which granular material is not needed.

d. Sam McCullough proposed that polypropylene be added to item 11 as it also meets the same standards.

e. The Council proposed to amend item 15 by adding the language, "Vent pipe terminals shall pass through the roof and shall . . . "for the purpose of clarification. The BCD concurred in that proposal.

f. Wilton Berger suggested that the heading to item 15 would be more clear if the words "and Frost Closure" were deleted. The BCD concurred.

78. The MG Coupling Company proposed that MHD 124(a)(2)(11-4) be amended by including an alternate piping joining method which has been tested to be equivalent to those already listed in the code. The Council on Plumbing Codes and Examinations had recommended approval of this amendment.

79. Sam McCullough and the Council proposed to amend MHD 123(d)(9)(ff), (11)(hh) and 124(a)(11)(mm) to include the use of alternate materials and methods of construction which meet accepted standards.

a. The Minnesota Pipe Trades Association contends that the expansion joint has not been adequately tested and that the 35-foot limit should remain with no exceptions.

b. Mr. Scarano recommended that all horizontal limitations be removed as expansion joints, restraint fittings or offsets can be effectively used as is allowed for vertical stacks.

c. Mr. Scarano proposed to include solvent cement standards in MHD 124(a)(2)(mm) to specify what "approved recognized standards" refers to.

d. The Council on Plumbing Code and Examinations commented:

> On Tuesday, November 29, 1977, it was our pleasure to attend the public hearing concerning amendments to the State Building Code and the Minnesota Plumbing Code. Mr. Anthony L. Scarano, who represents the Plastic Pipe Institute, requested in a statement to the hearing officer that the 35-foot horizontal limitation on plastic pipe be removed from the Minnesota Plumbing Code. The point that we would like to make is that the unlimited use of plastic horizontal piping above the floor was never brought before the Council on Plumbing Code and Examinations for discussion. Enclosed is a copy of the May 23, 1977, Council minutes. You will note the only request for unlimited use of plastic DWV pipe was for vertical use only. It is our feeling that if Mr. Scarano would like to see the 35-foot horizontal limitation removed from the Minnesota Plumbing Code, he should appear before the Council and express his views on the subject.
>
> It has been past practice that any new amendments to the Minnesota Plumbing Code are brought before the Council for discussion prior to submission to the State Building Code Division and the public hearing.
>
> The Council therefore requests that the amendment proposed by Mr. Scarano be denied at this time and be referred to the Advisory Council for technical review and recommendation to the State Building Code Division.

e. The BCD also stated that Mr. Scarano's proposals should go before the Council before being presented for public hearing.

80. SBC 8806 This proposal includes various amendments to the elevator code as recommended by the Elevator Code Subcommittee. The items to be included or changed are for the purpose of including current changes to the AMSI standards, NFPA Standard, and minor editorial changes that will reflect the current state of the art in elevator construction and installation.

a. The City of St. Paul commented on the elevator code amendments as follows:

> The Division of Housing and Building Code Enforcement of the City of St. Paul wishes to call to your attention our concern over the proposed amendment to State Building Code, Section 8806-2k. Our concern is that the addition of the words, "an on-site fuel supply" may cause us some significant problems in the development of high-rise buildings in areas of dense construction.
>
> This office fully supports the concept of an alternate fuel supply to operate the emergency generator. However, we feel that the natural gas distribution system throughout our city provides a reliable source of fuel for emergency generation.
>
> The on-site fuel supply may be of considerable importance in an earthquake region; however, Minnesota is, by its Building Code, classified in a zero earthquake zone.
>
> The requirement for on-site fuel supply would mean that these buildings would have to have a two-hour storage supply of either propane gasoline or diesel oil, which in itself creates a hazard, particularly in our downtown, highly-developed areas.
>
> Emergency power generation systems should be tested at frequent intervals to insure their reliability. This would require use of an on-site fuel supply and necessitate its being replenished at frequent intervals which would be considered hazardous deliveries further enhancing the danger on downtown streets.
>
> Being able to use the natural gas distribution system is a reliable and more safe means of operating emergency power generation systems.
>
> We again request that the State Building Code, Section 8806-2k, not be amended so as to require on-site storage of fuel.

81. Appendix Chapter 32 Re-roofing This amendment is proposed by the Building Code Division because of the number of comments made by Building Officials wishing they had some control on re-roofing procedures. This amendment is the work of an Associated Roofing Contractors in California and was approved at

the annual meeting of ICBO in 1976. It will become a part of the 1979 Edition of the Uniform Building Code. Being an appendix chapter, it is only mandatory when a local unit of government chooses to adopt it. When adopted by a local unit, it must be applied as written.

a. "Section 3312" on page 94 of the proposed rules should read Section 3212.

b. Twin City Roofing, Inc. commented on Chapter 32 as follows:

> We wish to protest the inclusion of this section on the grounds that the proposed information is intruding on design, rather than confining itself to performance which is its intent. The proposal would place building officials in a design status, a position they are unqualified to fullfill.
>
> In addition, the design criteria for reroofing is so sensitive, so subject to existing conditions, we doubt whether effective codes can be formulated, other than simply performance requirements.
>
> Section 3211.(b)- Par. 1. Preparation of gravel-surfaced roofs presents a perfect example of an attempt to codify design criteria. The requirement for "cleaning of loose gravel--and installation of one-half inch insulation in 40# of coal tar pitch" is absolutely the most inept procedure this writer has ever heard. Responsible architects and roofing contractors would laugh themselves sick over this suggestion since it does not conform to any legitimate roofing practice procedure. The fact that some untrained, unqualified building official could demand this procedure would sober their mirth since the procedure would be disastrous along with the other methods included in this section.
>
> We suggest that any modification should deal with performance--requirements for Class A, B, C, roof deck performance, insulation performance, etc. and leave design to those qualified to meet existing conditions.

c. Hormel commented:

> The provision of concern to us is found at Section 3211.(a) and requires built-up roof coverings to be completely removed before new roof coverings may be applied. Certain exceptions are set forth which may apply after an inspection by a building official.
>
> We do not believe it should be necessary for a building official to make this determination. Our qualified engineering staff certainly can determine whether removal of existing roof coverings is warranted. It would be a waste of time and state resources to require this determination to be made by a building official.

We urge you to delete Section 3211.(a) in its entirety or amend it so that building officials would not be required to make this determination.

d. The Minnesota Multi-Housing Association commented on Chapter 32 as follows:

It is the position of the Minnesota Multi-Housing Association that Chapter 32, Re-roofing, should not be adopted at this time but should be held for further study and refinement. This chapter contains a number of provisions that appear to be ambiguous, are departures from current good and accepted practice, or which present severe problems in administration by local building officials.

The following comments are presented as considerations for future study or, in the alternative, as proposed amendments to this chapter should the chapter be adopted and made part of the State Building Code.

Regarding section 3210: The requirement for both a pre- and a post-installation actual inspection by a building official for all new roof installations would be extremely difficult if not impossible for local inspection departments to comply with. According to a Minneapolis building official, this provision is simply unworkable. Currently in Minneapolis, there is no requirement for a pre-installation inspection. Theoretically, there is a post-installation inspection, but it may be a very cursory one. According to this high-ranking Minneapolis building official, there is virtually no possibility of passage of this chapter in Minneapolis due to this provision as well as other ambiguities and unclear language in the chapter.

Current practice in St. Paul is to make a pre-installation inspection only when application is made to put a fourth roof on a building or if there is some cause for question of the feasibility of the re-roofing application, or if an inspection is requested by the owner, otherwise, a re-roofing permit is automatically granted without inspection. According to a St. Paul building official, it is not administratively possible to make both a pre- and post-installation inspection due to the extremely busy schedules of the inspection department personnel.

A partial solution to this problem might incorporate the following changes in the proposed amendment: "New roof coverings shall not be applied over existing roofswithout first obtaining ~~an~~ a ~~inspection-and-written-approval~~ permit from the building official. An ~~final~~ inspection and approval shall be obtained from the building official when the re-roofing is complete."

Regarding Section 3211(a)2: This provision limits built-up roof coverings to a total of two roofs. It is very expensive to remove old roofs, and there appears to be no reason, according to current practice, why a third or even fourth roof should not be allowed where the structure complies with the other four criteria enumerated in this section. This limitation

appears to be arbitrary and without necessity in light of the requirement to comply with the other standards of this section.

Regarding Sections 3211(b)3, and (b)4: The responses made by Building Code Division representatives to questions at the public hearing indicate that these sections are intended to imply that local building officials would have discretion in their enforcement. The language of these paragraphs in their current form, however, is mandatory. Since local municipalities, if they adopt this chapter, must do so without change, a great deal of confusion would be engendered among local inspection departments as to whether or not in fact they have any discretion regarding these requirements. In practice, these two sections are probably requirements for all new parts since it would be difficult or impractical, generally, to replace the old parts due to the damage done to them in removal. In current practice, often the best procedure is simply to loosen the existing parts where feasible and slip the roofing material underneath. Certainly rusted or defective parts should be replaced; however, it appears to be arbitrary and unnecessary expense to require that all parts, regardless of condition, be removed. Paragraphs 3 and 4 of section 3211(b) should be amended by making the following sentence the first sentence of each of these paragraphs: "The following may be required as necessary in the judgment of the building official."

Regarding Section 3212: Paragraphs 2, 3, and 4 should be studied and documented as to whether or not these limitations on numbers of overlays are in fact necessary. At the least, these limitations should be left to the discretion of the building official as he deems necessary in his judgment.

In conclusion, we urge that Chapter 32 not be adopted at this time but left for further study and clarification. In the alternative, we sincerely hope that the amendments suggested in this letter be incorporated in this chapter.

e. The City of Minneapolis also stated that Chapter 32 be reconsidered and not be made a part of the code at this time.

F. The 3M Company commented on Section 3209 as follows:

The proposed changes would require all re-roofing work to be inspected before starting, during and after construction. This would be excessive monitoring of maintenance-type work and serve very little practical purpose. The only areas in the state that could supply these inspections are the larger cities with adequate inspection departments.

82. UBC Appendix Chapter 41 This appendix chapter is known as the security code and is proposed for inclusion by the Task Force of the Governor's Commission on Crime Prevention and

Control. The proposal is patterned after a national study on the same subject and reflects standards that have been subjected to testing and evaluation which are believed to be adequate for the level of control necessary for residential types of occupancies. Local units of government may adopt this chapter at their own discretion. The BCD supports the security code as long as it remains non-mandatory.

a. Several legislators (Senators McCutcheon, Borden and Schaff, and Representative Arlandson) commented in support of the security code and proposed that it be made mandatory state-wide.

b. The City of Edina commented on the security code as follows:

> The Edina Fire Department would like to go on the record in support of the proposed standard, "Chapter 41 -- Building Security", with the exception of the following two items:
>
> 1. Section 4107(a), Exception No. 3 -- "Window Protection with Metal Bars or Grills"
>
> 2. Section 4107(b) -- "Protection of Jalousie Windows with Metal Bars or Grills"
>
> In both items, the use of such protection is contrary to sound life safety practices and is not in keeping with the limitations as set forth in Section 4103 of this standard. Such devices should not be encouraged or required. Depending on the specific application of such devices, there is a potential conflict with existing Building Code (1975 U.B.C.) Sections (1304, 1404, and 3802(B)(1).
>
> With exception of the above two items, I believe this standard will do much to improve residential security without adversely affecting life safety. Most importantly, it will provide a consistent guide for crime prevention premises surveys.

c. Herb Meyer proposed the following editorial changes and an amendment to 4107(a):

> Change the words "see UBC Standards 41-1 and 41-2 or UBC Standards 41-1, or UBC Standard 41-2" to the following: "See SBC 111, Appendix D, Building Security Standard 41-1, or 41-2", or in combination when combined. See Page 97, Sec. 4104, Page 48, Sec. 4105(a), Page 99, Sec. 4105(i), Page 100, Sec. 4106(a), and Page 102, Note 1 under Table 41-A.
>
> Sec. 4105(i), Exception No. 2, with the wording used, I believe, that UL Standard 972 requires adoption by reference.

Sec. 4107(a) General. Change Exception 3 to read as follows: "Windows that are not emergency egress as regulated by UBC Secs. 1304 and 1404, may be protected by approved metal bars or grilles having a patterns such that the minimum dimension of any opening in the bars or grilles shall not exceed 2 inches. The windows shall be equipped with a quick-acting release requiring no special knowledge or skill to operate." This would provide life safety as well as security if windows were installed as outlined above, and the emergency egress windows could not have bars or grilles at any time.

Sec. 4109 Exception. Again, the standard shown needs to be a referenced standard. "American National Standard Practice for Certification by Producer or Supplier ANSIZ 34.2 - 1969."

Sec. 4110. The referenced SBC sections are being deleted as shown on 3 and are not being re-adopted. Corresponding language is in UBC 104 and 107 and should be the referenced sections.

Delete the language "Add new Uniform Building Code Standards as follows" and "Uniform Building Code Standard No. 41-1." Insert in place "Add a new State Building Code Standard SBC 111, Appendix "D", Building Security Standard No. 41-1"

Delete the language "Based on Standard Methods F476-76 of the American Society of Testing and Materials." It does not clarify, nor is it needed for the effectiveness of the standard.

Change the words "Uniform Building Code" to "State Building Code" in the subheading and in Sec. 41. 1001.

Part B -- Horizontal Sliding Doors. Delete the entire paragraph that refers to proprietary publications as the reference does not clarify or add to the effectiveness of the standard.

Delete all of the language at top of Page 123 down to the word "Scope." Insert the following:

State Building Code SBC 111, Appendix "D" -- Building Security Standard 41-2.

Tests for Security of Window Assemblies.

See SBC 111, Appendix "D", Section 4107.

d. The Minnesota Multi-Housing Association opposes the adoption of Chapter 41 for cost reasons and the difficulty of of enforcement. The Association stated that Section 4105(i) "is confusing in that it requires greater impact resistance for glazing materials located within 36 inches of the lock of a swinging door than it does for the door panels themselves."

e. James E. Locke, A.H.C., commented that "consideration should be given to a provision for a 3/4-inch deadlocking latchbolt rather than 1/2 inch."

f. The Door and Hardware Institute proposed that Section 4105(h)1. be deleted because key control or security is lost early, thus making construction keying of no consequence.

Based on the foregoing Findings of Fact, the Examiner makes the following:

CONCLUSIONS

1. Due, timely and adequate legal notice of the hearing was properly served and filed by the Building Code Division, Department of Administration.

2. Pursuant to Minn. Stat. § 15.052, subd. 3 (1976), it is the duty of the Hearing Examiner to: ". . . (4) make a report on each proposed agency action. . . taking notice of the degree to which the agency has (i) documented its statutory authority to take the proposed action, (ii) fulfilled all relevant, substantive and procedural requirements of law or rule, and (iii) demonstrated the need for and reasonableness of its proposed action with an affirmative presentation of facts."

3. The Examiner concludes that the BCD has documented its statutory authority to promulgate the proposed rules.

4. The Examiner concludes that the proposed rules be amended as set out in Findings 8, 14a, 17a, 18a, 20b, 26a and b, 28a, 40a, 44c, 45a, 47b, 55a, 56a and b, 61b, 77a, b, d, e and f, and 82c and f for the reasons stated therein.

5. The Examiner concludes that Section 1401 be amended as set out in Finding 41a to conform to the provisions of the existing Minnesota Plumbing Code. Also, that Section 1401 be amended by deleting two items in the One and Two-Family Dwelling Code as proposed by the BCD in Finding 41b.

6. The Examiner concludes that proposed UBC 1807 is reasonable; however, the BCD should evaluate the concerns expressed by BOMA and LWSM Engineers set out in Finding 44a.

7. UBC 2907(a) should be further amended to include Lyon County. (See Finding 47a)

8. The evidence contained in the record indicates that hospitals and nursing homes would be safer if each corridor door was

equipped with an automatic closing device. However, the factors of cost, patient and resident safety during drills, the psychological effect of being closed in a room during a drill or fire, and the adequacy of staff to locate a fire if it should occur and take the appropriate action, must also be considered. (See Findings 50a-f) The Examiner concludes that exception number 3 should remain in UBC 3304(h) as set out in Finding 50f.

9. The BCD argues that UBC 512, Roof Access, was eliminated from the code because it is a "proprietary item" which serves a "limited sector of the industry" and is "not of benefit to the general public." (See Finding 63) Mr. Meyer and several communities (see Finding 63a and b) contend that the retention of UBC 512 is needed for servicing equipment which is installed on a roof. The Examiner concludes that UBC 512 should be retained to insure that an adequate servicing mechanism is available and not leave it up to the designers. Mr. Meyer's proposal regarding renumbering of SBC 8601 (see Finding 62a) should be followed.

10. Because there is statewide opposition to lowering window-sill heights to 44 inches, and the BCD stated that the current height of 48 inches is acceptable (see Findings 64a and b), the Examiner concludes that UBC 1304 and 1404 should be amended to reflect a height of 48 inches. Also, Mr. Meyer's observation that the Dwelling Code would need revision (see Finding 64c) should be noted.

11. Because the lathing and plastering industry has been relying on the alternative set out in present UBC 4701(a), and the BCD has not stated that it is not an acceptable alternative, the Examiner concludes that the Section be retained in the code. Otherwise, the industry would have to depend upon the approval of a local building official as to the acceptability of the method. (See Finding 67)

12. The Examiner agrees with the DNR that the Flood Proofing Regulations should be a mandatory part of the SBC. However,

them
to make/mandatory without prior notice would constitute a substantial change. This will have to be dealt with at a later hearing. (See Finding 68)

13. SBC 330(a)11 should be deleted because it references something which is not in existence. (See Finding 72a)

14. The Examiner concludes that UBC 3203 be amended only by the addition of the statement that the "entire State. . . shall be deemed an area subject to roof ice build-up." (See Finding 74) The necessity of the other proposals was not demonstrated.

15. The Examiner concludes that UBC 4506(d) not be amended as set out in Finding 76. The record contains too many unanswered questions regarding the viability of the proposed amendment.

16. The Examiner concludes that Mr. Scarano's proposed amendments to the Plumbing Code would constitute a substantial change. (See Findings 77c and 79b and c) These proposals should go to the Council on Plumbing Codes and Examinations for initial consideration prior to a public hearing.

17. The Examiner concludes that the reasonableness of proposed Appendix Chapter 32 was not demonstrated by the BCD. Findings 81b-f illustrate concerns regarding Chapter 32 which must be considered and dealt with. Chapter 32 should not be adopted at this time.

18. The Examiner concludes that amending Chapter 41 at this point to make it mandatory would constitute a substantial change. (See Finding 62a)

19. The Examiner concludes that the BCD and other rule proponents (Findings 74 through 80 and 82) have demonstrated the need for and reasonableness of the proposed rules with the exceptions noted in Conclusions 14, 15 and 17.

20. The Examiner concludes that the amendments he is recommending make the rules more reasonable and none constitute a substantial change.

Based upon the foregoing Conclusions, the Hearing Examiner makes the following:

RECOMMENATION

That the Building Code Division adopt the proposed rules as recommended to be amended in this Report.

Dated this 20th day of March, 1978.

Peter C. Erickson

PETER C. ERICKSON
Hearing Examiner

STATE OF MINNESOTA

DEPARTMENT OF ADMINISTRATION

In the Matter of the Proposed
Adoption of Amendments to
the State Building Code

AFFIDAVIT OF MAILING

DarlaMae Hormann, being first duly sworn, desposes and says:

That on the 26th day of October, 1977, at the City of St. Paul, County of Ramsey, State of Minnesota, she served the attached Notice of Hearing by depositing in the United States mail at said City of St. Paul, a true and correct copy thereof, properly enveloped, with postage prepaid, to all persons and associations at the addresses listed on the attached Certificate of the Secretary of State.

DarlaMae Hormann
Building Code Division

Subscribed and sworn to before me
this 26th day of October, 1977.

Cynthia L. Claason

CYNTHIA L. CLAASON
NOTARY PUBLIC - MINNESOTA
RAMSEY COUNTY
My Commission Expires Feb. 23, 1982

STATE OF MINNESOTA

DEPARTMENT OF ADMINISTRATION

In the Matter of the Proposed
Adoption of Amendments to
the State Building Code

AFFIDAVIT OF MAILING

Margaret Ann Opalinski, being first duly sworn, desposes and says:

That on the 28th day of October, 1977, at the City of St. Paul, County of Ramsey, State of Minnesota, she served the attached Notice of Hearing by depositing in the United States mail at said City of St. Paul, a true and correct copy thereof, properly enveloped, with postage prepaid, to all persons and associations at the addresses listed on the attached Certificate of the Secretary of State.

Margaret Ann Opalinski

Margaret Ann Opalinski
Building Code Division

Subscribed and sworn to before me
this 28th day of October, 1977.

Cynthia L. Claason

CYNTHIA L. CLAASON
NOTARY PUBLIC - MINNESOTA
RAMSEY COUNTY
My Commission Expires Feb. 23, 1982

State of Minnesota

Department of Administration

In the Matter of the
Proposed Adoption of
Amendments to the
State Building Code

STATEMENT OF EVIDENCE AND
NAMES OF WITNESSES

Don Pates, Director, Richard Brooks, Assistant Director, and Alvin Kleinbeck, Code Consultant of the Building Code Division, will appear on behalf of the Building Code Division at the hearing to be held on November 28, 1977. They will testify regarding the need for and reasonableness of the proposes rules and amendments. The substance of their testimony is set forth in the Statement of Need submitted herewith.

In support of the proposed rules and amendments, the following will be submitted at the hearing: 1976 State Building Code (SBC), 1976 Uniform Building Code (UBC), Minnesota Plumbing Code, and Supplements A17.1c-1974, A17.1d-1975, A17.1e-1975, A17.1f-1975, and A17.1g-1976 of the American National Safety Code for Elevators, Dumbwaiters, Escalators, and Moving Walks.

Date: 10-31-77

Don Pates

Don Pates, Director
Building Code Division

STATE OF MINNESOTA

DEPARTMENT OF ADMINISTRATION

In the Matter of the Proposed
Adoption of Amendments to
the State Building Code

STATEMENT OF NEED

The above-captioned proposed rules are amendments to the existing State Building Code.

Pursuant to Minn. Stat. 1976, Section 16.851 the Commissioner of Administration is charged with the responsibility of applying the State Building Code to all local governmental units, and with the duty of amending the State Building Code to maintain the most modern code standards regarding the construction, addition to, or alteration of buildings to provide for minimum standards to safeguard life or limb, health, property and public welfare.

Further, the Commissioner of Administration may hold public hearings at such times as interested parties petition for amendments to the State Building Code. Pursuant to Minn. Stat. 1971, Section 15.0412, Subdivision 1 and 4, the Commissioner is empowered to promulgate reasonable substantive rules and may also amend rules as is deemed necessary upon a showing of need for the Amendment subsequent to a public hearing. Further, the Commissioner of Administration may hold Public Hearings at such times as interested parties petition for Amendments to the State Building Code. The above-captioned amendments that fall within the above-mentioned conditions are deemed sufficiently important to warrant consideration through the process of Public Hearing.

It is recognized that the promulgation of rules and regulations on any subject matter is for the purpose of establishing procedures by which the most feasible end result may be accomplished in the application of recognized national standards with limited amendments for regional utilization.

SBC 101 Title. This section indicates that the rules and standards adopted by reference are collectively known as the Minnesota State Building Code.

SBC 102 Purpose and Application. There is a need to provide uniform standards to safeguard life and limb, health, property and public welfare for all buildings and structures, so that the application and enforcement on the state wide basis will lend itself to accomplishing that need.

SBC 103 Definitions. Definitions are provided so that there can be a common understanding of both the language used as well as certain statutory terms commonly used by persons working with the code.

SBC 104 Scope. This section generally identifies what elements of construction and occupancy uses are provided for by the code with certain exceptions.

SBC 105 Fallout Shelter. This section is included in the code to provide a vehicle for the Technical Requirements for Fallout Shelters when the need is determined by the Department of Public Safety, Division of Civil Defence and the State Architectural Engineer.

SBC 106 State-owned Buildings. The need of this section is to identify such buildings that would come under the exclusive jurisdiction and custodial control of one or more state departments or agencies.

SBC 107 State Plan Check Fees. When the Building Code Division is requested to make a check of plans and specifications by a municipality or individual for projects that would not otherwise require review by the Division a need for recovering a portion of the cost involved has been established by the schedule incorporated in the document.

SBC 108 Disclaimer Clause. This clause is needed so that any inclusion or reference to any proprietary equipment, material or method of installation is purely coincidental. The authority for such determination will be found in the various licensing ordinances for each type of vendor who performs the work.

SBC 109 Appendices. This section identifies the appendices that are declared as a mandatory portion of the code and the remaining appendices may be adopted without charge and enforced by any unit of local government.

SBC 110 Flood Proofing Regulations. These rules and regulations are adopted by reference and have been amended where necessary to reflect the needs in the State of Minnesota. It is important that regulations be imposed in flood plain areas of the state to provide a measure of safety and control and to make these areas eligible to purchase insurance for building construction in such areas.

SBC 111 Adoption of the Uniform Building Code by Reference. The adoption of the Uniform Building Code 1976 Edition will bring into the field of code application and enforcement the current uses of materials and methods of construction that is compatable with the nation as a whole. There are however certain items which require amending in order to reflect legislative mandates or changes to the code that have been previously a part of the code and the necessity of maintaining the requirement in the adoption of the 1976 Edition of the UBC to reflect the continuity of certain items which are regional in nature and have been demonstrated to be necessary for the State of Minnesota.

UBC 104(j) THis item was a total amendment to the 1973 UBC and is now a part of the 1976 Edition with the exception of the proposed item 5 which is part of the original amendment.

UBC 204 THis amendment is changing the last sentence of this section so that a copy of all appeals and the decisions made by the unit of local government must be filed with the State Building Inspector for his acceptance or challange.

UBC 303a This amendment is necessary to allow the units of local government to establish its own fee schedule for the permits it issues. These cost can be increased or decreased as dictated by the needs of the community.

UBC 420 These definitions are necessary to make the occupancy designation for these supervised living facilities as licensed by the State Department of Health compatable with the classification of similar function in the 1976 UBC.

UBC 501 Table 5-A This change amends Table 5-A to incorporate the supervised living facilities as defined in UBC 420.

UBC 605, 705, 805, 905, 1005, 1105, 1205, 1305, and 1405 All reflect a change that incorporates an amendment that is found in Section 1711(h) which establishes a matrix setting apart from the minimum requirement for sanitation facilities for all occupancies addresed in the code. These sections except 1305 and 1405 have also reduced the light and ventilation required in these occupancies from 1/8 or 12 1/2% to 10% of the floor area with 1/20th or the area openable. This reduction will afford a better control of energy conservation in building design. These changes are needed so that uniformity in the code requirements may be maintained.

UBC 802(c) This change is proposed as was previously contained in the 1973 Amendments to the UBC. The change permits classrooms for children in School Grades 1 and 2 to be located in rooms above the first floor level as this is compatable with guidelines established by the State Department of Education.

UBC 809 This section has been amended to identify the NFPA standard for the installation of the protective devices. It sets aparts some definate guidelines for an approved alarm system. This amendment is the same as was adopted for the 1973 UBC and has been updated to provide for current printed standards.

UBC 901 The amendments contained in this section, Division 1, change the sic years of age to under kindergarten age and in Division 2, provides for the inclusion of Class B supervised living facilities. This is the same as was amended in the 1973 code.

UBC 902(b) The exception has been deleted because the requirements for licensing of these facilities by the Health Department and the applicability of certain funds do not permit buildings of combustible construction to be used for such occupancies. This section was also deleted from the 1973 Edition of the UBC by amendment.

UBC 905 For the light and ventilation changes see the previous comments to the "05" sections of the Code. A reference is also included to refer to the State Mechancial Code for ventilation requirements for such occupancies.

UBC 909 An additional sentence has been added to this section to indicate that the alarm system must comply with the same criteria that has been established in a previous section so that uniformity may be maintained in the requirements of the Code.

UBC 1005 For the light and ventilation changes see the previous comments

to the "05" sections of the Code. A reference is also included to refer to the State Mechanical Code for ventilation requirements for such occupancies.

In the third paragraph of this section, the third line, the 1 cfm per square foot is reduced to 3/4 cfm per square foot. The 1973 UBC does not contain such a provision but the State Mechanical Code has had the requirement for 3/4 cfm per square foot since its inception and it has created no problem in providing adequate ventilation for these occupancies.

UBC 1105 For the light and ventilation changes see the previous comments to the "05" sections of the Code. A reference is also included to refer to the State Mechanical Code for ventilation requirements for such occupancies. The change in the ventilation requirements is the same as for UBC 1005 above. An additional provision is added to this section granting the Building Official the authority of accepting and alternate system to the basic requirements of the Code provided the specified alternate design is complied with.

UBC 1109 This seciton is added to the Code to safisfy legislative action in amending Minn. Stats. 1976 Section 16.85 Subdivision 1, second paragraph.

UBC 1205 This section refers to Section 1105 as meeting the intent of the light and ventilation provisions see the previous Section 1105 for the need.

UBC 1301 The assignment of class A Supervised living facilities has been made to this occupancy classification and is included here for continuity of Code application.

UBC 1314 This section makes the inclusion of Appendix Chapter 35 mandatory for STC and IIC control in all Group R Division 1 occupancies. This item has been a previous part of the Code and should continue to be included.

UBC 1315 This provision affords an added amount of securtiy for these Group R Division occupancies. This provision has been in the Code since its inception and is felt necessary because of the reason stated above. If Appendix Chapter 41 as proposed is accepted and adopted be a unit of local government then the most restrictive measure would apply. This section as placed in this portion make the provision mandatory in all cases where Appendix Chapter 41 would not be adopted.

UBC 1401 This amendment adds a new residential accupancy classification to the Code. This is adopting by reference the One and Two Family Dwelling Code as a complete document which may be used by builders and developers of such residential structures. When this code is used for such construction no other elements of the State Code will apply except for SBC 2MCAR 1.16001 thru SBC 2MCAR 1.16006.

UBC 1711(b) This amendment reflects only the first paragraph of this section and deletes the remaining portion of item (b). The remaining portion that is deleted deals with requirements for the physically handicapped. In as much as Minnesota has its own regulations for the function these items in the UBC would be in conflict in most cases and therefore should not be a part of the State Building Code.

UBC 1711(h) This amendment to the Code is to continue in force provisions which have been in the State Code of a period of time and establishes a matrix to indicate sanitation facilities that must be provided for all occupancies. Some of the square foot per occupant figures have been changed to reflect a more realistic occupant load for the types of uses.

UBC 1807 THis is an amendment to the UBC 1976 which was approved by ICBO at their annual business meeting in September 1977. We are recommending inclusion of this item at the present time because it provides for more reasonable requirements to be imposed when buildings are constructed. Occupant life safety must be the prime concern of all designers and builders of this type of structures.

The refined language of the amendment after years of study since the original introduction of the Hi Rise requirements into the Code is more acceptable to the Building Officials and Fire Officials alike. This amendment will become a part of the 1979 Edition of the Uniform Building Code.

UBC 2305(d) This amendment is resubmitted to the 1976 UBC in order to provide the design criteria for snow loading across the state. It also takes into consideration the requirements for differential loading and snow drift load configurations and some load failures have occurred to predicate the retention of this amendment in the Code.

UBC 2312(a) After a study and review of the Seismic requirements in the code for the State of Minnesota, the Structural Subcommittee of the Building Code Standards Committee recommends that the State be placed in a Seismic Zone "0" No Damage Area as identified in Chapter 23 of the code. Even though there has been a tremor in the recent past the design considerations for wind loading will for the most part, out weigh the seismic design requirements. Minnesota has been classified either by code or code amendment since the inception of the code in Seismic Zone "0" and the committee feels that there is no immediate problem in remaining in that classification.

UBC 2907(a) This amendment establishes the frost depth zones for footing depth requirements in the State of Minnesota. This is a previous amendment and should be retained to maintain a continuity in the requirements for the footing designs.

UBC 3205(c) The last paragraph of this section is deleted by this amendment. The paragraph deleted would prohibit the use of eave or cornice vents in most roof structures of residential occupancies. The atmosphere or climate conditions experienced in the State of Minnesota required adequate ventilation of attic spaces. Although the application of the provision would deter the spread of fire through combustible attics, the problems created by inadequate ventilation would be far more prevelant in an area where the temperature varies or greatly as it does in the State of Minnesota which would create a multitude of condensation and resultant deterioration problems.

UBC 3303(a) This section is amended to include the requirements for a door meeting the minimum width and height for exit doors that serve dwelling units or guest rooms within a structure as well as the requirement for the primary entrance/exit door. This would provide for adequate egress in emergencies as well as better mobility when moving furnishings through the door openings.

UBC 3304(h) Exception number 2 is added to this section to permit an alternate method of construction for openings in corridors when certain other criteria is met. This provides for the construction of skyway systems and mall corridors to serve area by providing a certain amount of openness. This exception is in the present code and is worthy of continued consideration.

Exception number three is deleted from the amendments because of the availability of door closing hardware that will allow the corridor doors on Group I occupancies to be free swinging and close automatically when emergencies such as smoke or fire is detected and an alarm situation is indicated to the control devices.

UBC Table 33-A This column and the corresponding footnotes to this table are deleted because the acress/egress requirements are included in amendment UBC Chapter 55 of the code.

UBC 3318(c) An additional paragraph is added to this section to reduce the self-closing or automatic closing requirements for corridors that serve areas in Group I occupancies where the use of such doors would be under a controlled condition at all times. This normally applies to situations where the persons liberty would be restrained.

UBC 3801(c) This amendment is added to the definitions of this section to describe the type of standpipe. This section is currently an amendment to the code and should be retained to provide for continuity and uniformity of life safety provisions.

UBC 3802(b)5 Exception number tow has been an amendment to this section and is retained as an amendment to the UBC 1976 to permit the omission of automatic fire extinguishing equipment from certain rooms when detectors of products of combustion are installed in such rooms. This exception is only applicable to buildings of Type II - one hour construction.

UBC 3802(d) This amendment is retained from the previous amendments and is necessary to assure that in occupancies where commercial cooking equipment is installed that these areas of equipment even though the remaining portions might not require automatic fire extinguishing equipment.

UBC 3803(a)(b)(c)(d) This section describes the requirements for the installation of the Fire Department Standpipes. This amendment provides for a more ready source of water for fire fighting purposes and will afford a time saving factor when the need arises. This item has been a part of the State code since 1973 and should be retained as an amendment to UBC 1976 code.

UBC 3803(e) This item provides for the installation of a dry standpipe in buildings when it is approved by the local Fire Chief. This item is also retained from previous amendments to the code.

UBC 3804(b) This item is retained as an amendment to UBC 1976 from the previous code. It provides for the deletion of a wet standpipe in Education Occupancies and residential occupancies of the Group R Division 1 classification. It also reduces the number of story height of 4 to 3 in establishing the requirements as to when they are to be installed. Maintenance and control of these units have been a problem in the deleted occupancies and presents a lesser problem for the fire services.

UBC Chapter 50 This chapter is deleted in its entirety and Section 301 through 337 of the State Building Code is substituted therein. This section deals with the existing code for manufactured structures and will be retained as previously published.

UBC Chapter 51 This chapter is deleted in its entirety and SBC section 8801 through 8810 is substituted therein. This section of the SBC has been in place since the inception of the code and should be retained to provide for continuity and uniformity of the code requirements.

UBC Chapter 55 These are the same items for facilities for the handicapped that have appeared in the code since its promulgation and remains unchanged except for the editorial change for occupancy classification in Section 5501(b)1 and the addition of item number 7 to this section. This chapter in toto addresses the requirement to be met to provide for accessibility and usability of structures and fixtures for the handicapped. This item should be retained to provide continuity of the provisions in the code.

UBC 8601 These items have been added to the list in this section which cross references various sections of the code where consideration of electrical provisions must be identified.

SBC 304 The items addressed in this portion of the code establishes additional criteria necessary for the approval of plans submitted for construction of manufactured structures, evidence of complying with the energy conservation requirements and an increase in seal fees to help defray the cost.

UBC 3203(d)3 Amendments submitted by Sol J. Jacobs, Director of Inspections, City of Minneapolis.

This proposal is included in keeping with Minn. Stats. 1976 Section 16.86 subdivision 6. This item is concerned with roof ice build up problems.

UBC 3207(c) This amendment is submitted by the Council on Plumbing Code and Examinations, Department of Health. This proposal is included in keeping with Minn. Stats. 1976 Section 16.86 Subdivision 6. This item will required roof drains to discharge above grade.

UBC 4506(d) This amendment is submitted by the Acme Awning Co., Minneapolis, and the Department of Inspections, City of Minneapolis. This proposal is included in keeping with Minn. Stats. 1976 Section 16.86 Subdivision 6. This item seeks a reduction in height clearance for awnings above the public walkway.

Amendments to the Plumbing Code There are 16 items in this proposal which reflect changes in the use of some materials. This proposal is submitted and recommended by the Council on Plumbing Codes and Examinations. The proposal is included in keeping with Minn. Stats. 1976 16.86 Subdivision 6.

MHD 124(a)(2)(11-4) This proposed amendment is submitted by the M. G. Coupling Company, Los Angeles, California and recommended by the Council on Plumbing Codes and Examinations. The proposal is included in keeping with Minn. Stats. 1976, 16.86 Subdivision 6. This proposal would permit addition materials to be used in the connection of hubless cast iron pipe.

MHD 123(9)(ff), MHD 123(11)(hh) and MHD 124 (11)(mm) This proposed amendment is submitted by S. D. McCullough, Genova-Minnesota, and recommended by the Council on Plumbing Codes and Examinations. The proposal is included in keeping with Minn. Stats. 1976, 16.862 Subdivision 6. This proposal would permit the use of expansion and contraction joints in plastic piping.

SBC 8806 This proposal includes various amendments to the elevator code as recommended by the Elevator Code Subcommittee. The proposal is included in keeping with the Minn. Stats. 1976, 16.86 Subdivision 6. The items to be included or changed are for the purpose of including current changes to the ANSI standards, NFPA Standard and so minor editorial changes that will reflect the current state of the art in elevator construction and installation.

UBC Appendix Chapter 32 This appendix item is recommended by the Building Code Division for inclusion in the code. This new Appendix Chapter establishes minimum requirements applicable to re-roofing existing buildings. Section 3210 requires that new roof covering shall not be applied over existing roofs without first obtaining an inspection and written approval from the building official. Section 3211 contains requirements for re-roofing over built-up roof construction, and Section 3210 contains re-roofing requirements for application over shakes and shingles. This appendix item was approved at the annual meeting of ICBO in 1976 and will be a part of the 1979 Edition when it is published. Some direction in coping with re-roofing has been needed for some time and this appears to be a viable solution.

UBC Appendix Chapter 41 This appendix chapter is known as the security code and is proposed for inclusion by the Task Force of the Governors Commission on Crime Prevention and Control. The proposal is patterned after a national study on the same subject and reflects standards that have been subjected to testing and evaluation which are believed to be adequate for the level of control necessary for residential types of occupancies. This proposal is included in keeping with Minn. Stats. 1976, 16.62 Subdivision 6.

DATE: November 1, 1977

Richard L. Brubacher
Commissioner of Administration

STATE OF MINNESOTA

DEPARTMENT OF ADMINISTRATION

In the Matter of the Proposed)
Adoption of Amendments to the)
State Building Code)

AFFIDAVIT OF RECEIPT

Margaret Opalinski, being duly sworn on oath, deposes and says:

1. That she is an employee of the Building Code Division, Department of Administration, State of Minnesota;

2. That on the 27th day of October, 1977, she went to the Secretary of State's Office of the State of Minnesota and requested a current list of all representatives and associations or other interested groups or persons who had registered their names with the Secretary of State for the purpose of obtaining notices of public hearings relating to the promulgation of rules pursuant to Minn. Stat. 15.0412;

3. That on the 27th day of October, 1977, in response to the above request, the Secretary of State provided her with such a list.

Further affiant sayeth not.

Margaret Opalinski

MARGARET OPALINSKI

Subscribed and sworn to before me
this 23rd day of November, 1977.

Darla Mae R. Hormann

Notary Public

DARLA MAE R. HORMANN
NOTARY PUBLIC - MINNESOTA
RAMSEY COUNTY
My Commission Expires Feb 7, 1981

STATE OF MINNESOTA

DEPARTMENT OF ADMINISTRATION

In the Matter of the Proposed
Adoption of Amendments to
the State Building Code

CERTIFICATE OF DELIVERY
OF THE SECRETARY
OF STATE LIST

I hereby certify that the attached 490 labels and 10 sheets constitute the complete list of persons, associations, and other interested groups who as of 8:45 o'clock a.m., this 27th day of October, 1977, have requested pursuant to M.S. 1974, Section 15.0412 that their names be placed on file with the Secretary of State for the purpose of receiving notice of public hearing on proposed rules on the subject captioned above.

SECRETARY OF STATE

Joan Anderson Growe

BY: Cheri L. Mattson

STATE OF MINNESOTA

DEPARTMENT OF ADMINISTRATION

IN THE MATTER OF THE
PROPOSED ADOPTION OF
AMENDMENTS TO THE
STATE BUILDING CODE

NOTICE OF HEARING

NOTICE IS HEREBY GIVEN that a public hearing in the above-entitled matter will be held in Room 83, State Office Building, Aurora and Fuller Streets, St. Paul, Minnesota on November 28, 1977 commencing at 10:00 a.m. and continuing until all persons have had an opportunity to be heard.

All interested or affected persons will have an opportunity to participate. Statements may be made orally and written materials may be submitted at the hearing. In addition, written materials may be submitted by mail to Peter Erickson, State Hearing Examiners Office, Room 300, 1745 University Avenue, St. Paul, Minnesota 55104, 612/296-8118, either before the hearing or within 5 days or up to 20 days after the close of the hearing upon order of the hearing examiner.

The proposed rules, if adopted, will bring about changes that will place nationally recognized standards and refined changes in line with the state of the art in the use of materials and methods of construction within the State of Minnesota. Copies of the proposed rules are now available and one free copy may be obtained by writing to the Building Code Division, 408 Metro Square Building, 7th and Robert Streets, St. Paul, Minnesota 55101. Additional copies will be available at the door on the date of the hearing. The agency's authority to promulgate the proposed rules is contained in Minn. Stat. 16.86 (1974). A "statement of need" explaining why the agency feels the proposed rules are necessary and a "statement of evidence" outlining the testimony they will be introducing will be filed with the Hearing Examiners Office at least 25 days prior to the hearing and will be available there for public inspection.

Please be advised that pursuant to Minn. Stat. 10A.01, subd. 11 (1974) any individual engaged for pay or other consideration for the purpose of representing persons or associations attempting to influence administrative action, such as the promulgation of these rules, must register with the State Ethics Commission as a lobbyist within five days of the commencement of such activity by the individual.

Date: 10/11/77

Richard L. Brubacher
Commissioner of Administration

STATE OF MINNESOTA

DEPARTMENT OF ADMINISTRATION

IN THE MATTER OF THE
PROPOSED ADOPTION OF
AMENDMENTS TO THE
STATE BUILDING CODE

NOTICE OF HEARING

NOTICE IS HEREBY GIVEN that a public hearing in the above-entitled matter will be held in Room 83, State Office Building, Aurora and Fuller Streets, St. Paul, Minnesota on November 28, 1977 commencing at 10:00 a.m. and continuing until all persons have had an opportunity to be heard.

All interested or affected persons will have an opportunity to participate. Statements may be made orally and written materials may be submitted at the hearing. In addition, written materials may be submitted by mail to Peter Erickson, State Hearing Examiners Office, Room 300, 1745 University Avenue, St. Paul, Minnesota 55104, 612/296-8118, either before the hearing or within 5 days or up to 20 days after the close of the hearing upon order of the hearing examiner.

A description of the nature and extent of the proposed rules is as follows:

SBC 101 Title. This section indicates that the rules and standards adopted by reference are collectively known as the Minnesota State Building Code.

SBC 102 Purpose and Application. There is a need to provide uniform standards to safeguard life and limb, health, property and public welfare for all buildings and structures, so that the application and enforcement on the state wide basis will lend itself to accomplishing that need.

SBC 103 Definitions. Definitions are provided so that there can be a common understanding of both the language used as well as certain statutory terms commonly used by persons working with the code.

SBC 104 Scope. This section generally identifies what elements of construction and occupancy uses are provided for by the code with certain exceptions.

SBC 105 Fallout Shelter. This section is included in the code to provide a vehicle for the Technical Requirements for Fallout Shelters when the need is determined by the Department of Public Safety, Division of Civil Defence and the State Architectural Engineer.

SBC 106 State-owned Buildings. The need of this section is to identify such buildings that would come under the exclusive jurisdiction and custodial control of one or more state departments or agencies.

SBC 107 State Plan Check Fees. When the Building Code Division is requested to make a check of plans and specifications by a municipality or individual for projects that would not otherwise require review by the Division a need for recovering a portion of the cost involved has been established by the schedule incorporated in the document.

SBC 108 Disclaimer Clause. This clause is needed so that any inclusion or reference to any proprietary equipment, material or method of installation is purely coincidental. The authority for such determination will be found in the various licensing ordinances for each type of vendor who performs the work.

SBC 109 Appendices. This section identifies the appendices that are declared as a mandatory portion of the code and the remaining appendices may be adopted without charge and enforced by any unit of local government.

SBC 110 Flood Proofing Regulations. These rules and regulations are adopted by reference and have been amended where necessary to reflect the needs in the State of Minnesota. It is important that regulations be imposed in flood plain areas of the state to provide a measure of safety and control and to make these areas eligible to purchase insurance for building construction in such areas.

SBC 111 Adoption of the Uniform Building Code by Reference. The adoption of the Uniform Building Code 1976 Edition will bring into the field of code application and enforcement the current uses of materials and methods of construction that is compatable with the nation as a whole. There are however certain items which require amending in order to reflect legislative mandates or changes to the code that have been previously a part of the code and the necessity of maintaining the requirement in the adoption of the 1976 Edition of the UBC to reflect the continuity of certain items which are regional in nature and have been demonstrated to be necessary for the State of Minnesota.

UBC 104(j) THis item was a total amendment to the 1973 UBC and is now a part of the 1976 Edition with the exception of the proposed item 5 which is part of the original amendment.

UBC 204 THis amendment is changing the last sentence of this section so that a copy of all appeals and the decisions made by the unit of local government must be filed with the State Building Inspector for his acceptance or challange.

UBC 303a This amendment is necessary to allow the units of local government to establish its own fee schedule for the permits it issues. These cost can be increased or decreased as dictated by the needs of the community.

UBC 420 These definitions are necessary to make the occupancy designation for these supervised living facilities as licensed by the State Department of Health compatable with the classification of similar function in the 1976 UBC.

UBC 501 Table 5-A This change amends Table 5-A to incorporate the supervised living facilities as defined in UBC 420.

UBC 605, 705, 805, 905, 1005, 1105, 1205, 1305, and 1405 All reflect a change that incorporates an amendment that is found in Section 1711(h) which establishes a matrix setting apart from the minimum requirement for sanitation facilities for all occupancies addresed in the code. These sections except 1305 and 1405 have also reduced the light and ventilation required in these occupancies from 1/8 or 12 1/2% to 10% of the floor area with 1/20th or the area openable. This reduction will afford a better control of energy conservation in building design. These changes are needed so that uniformity in the code requirements may be maintained.

UBC 802(c) This change is proposed as was previously contained in the 1973 Amendments to the UBC. The change permits classrooms for children in School Grades 1 and 2 to be located in rooms above the first floor level as this is compatable with guidelines established by the State Department of Education.

UBC 809 This section has been amended to identify the NFPA standard for the installation of the protective devices. It sets aparts some definate guidelines for an approved alarm system. This amendment is the same as was adopted for the 1973 UBC and has been updated to provide for current printed standards.

UBC 901 The amendments contained in this section, Division 1, change the sic years of age to under kindergarten age and in Division 2, provides for the inclusion of Class B supervised living facilities. This is the same as was amended in the 1973 code.

UBC 902(b) The exception has been deleted because the requirements for licensing of these facilities by the Health Department and the applicability of certain funds do not permit buildings of combustible construction to be used for such occupancies. This section was also deleted from the 1973 Edition of the UBC by amendment.

UBC 905 For the light and ventilation changes see the previous comments to the "05" sections fo the Code. A reference si also included to refer to the State Mechancial Code for ventilation requirements for such occupancies.

UBC 909 An additional sentence has been added to this section to indicate that the alarm system must comply with the same criteria that has been established in a previous section so that uniformity may be maintained in the requirements of the Code.

UBC 1005 For the light and ventilation changes see the previous comments to the "05" sections of the Code. A reference is also included to refer to the State Mechanical Code for ventilation requirements for such occupancies.

In the third paragraph of this section, the third line, the 1 cfm per square foot is reduced to 3/4 cfm per square foot. The 1973 UBC does not contain such a provision but the State Mechanical Code has had the requirement for 3/4 cfm per square foot since its inception and it has created no problem in providing adequate ventilation for these occupancies.

UBC 1105 For the light and ventilation changes see the previous comments to the "05" sections of the Code. A reference is also included to refer to the State Mechanical Code for ventilation requirements for such occupancies. The change in the ventilation requirements is the same as for UBC 1005 above. An additional provision is added to this section granting the Building Official the authority of accepting and alternate system to the basic requirements of the Code provided the specified alternate design is complied with.

UBC 1109 This seciton is added to the Code to safisfy legislative action in amending Minn. Stats. 1976 Section 16.85 Subdivision 1, second paragraph.

UBC 1205 This section refers to Section 1105 as meeting the intent of the light and ventilation provisions see the previous Section 1105 for the need.

UBC 1301 The assignment of class A Supervised living facilities has been made to this occupancy classification and is included here for continuity of Code application.

UBC 1314 This section makes the inclusion of Appendix Chapter 35 mandatory for STC and IIC control in all Group R Division 1 occupancies. This item has been a previous part of the Code and should continue to be included.

UBC 1315 This provision affords an added amount of securtiy for these Group R Division occupancies. This provision has been in the Code since its inception and is felt necessary because of the reason stated above. If Appendix Chapter 41 as proposed is accepted and adopted be a unit of local government then the most restrictive measure would apply. This section as placed in this portion make the provision mandatory in all cases where Appendix Chapter 41 would not be adopted.

UBC 1401 This amendment adds a new residential accupancy classification to the Code. This is adopting by reference the One and Two Family Dwelling Code as a complete document which may be used by builders and developers of such residential structures. When this code is used for such construction no other elements of the State Code will apply except for SBC 2MCAR 1.16001 thru SBC 2MCAR 1.16006.

UBC 1711(b) This amendment reflects only the first paragraph of this section and deletes the remaining portion of item (b). The remaining portion that is deleted deals with requirements for the physically handicapped. In as much as Minnesota has its own regulations for the function these items in the UBC would be in conflict in most cases and therefore should not be a part of the State Building Code.

UBC 1711(h) This amendment to the Code is to continue in force provisions which have been in the State Code of a period of time and establishes a matrix to indicate sanitation facilities that must be provided for all occupancies. Some of the square foot per occupant figures have been changed to reflect a more realistic occupant load for the types of uses.

UBC 1807 THis is an amendment to the UBC 1976 which was approved by ICBO at their annual business meeting in September 1977. We are recommending inclusion of this item at the present time because it provides for more reasonable requirements to be imposed when buildings are constructed. Occupant life safety must be the prime concern of all designers and builders of this type of structures.

The refined language of the amendment after years of study since the original introduction of the Hi Rise requirements into the Code is more acceptable to the Building Officials and Fire Officials alike. This amendment will become a part of the 1979 Edition of the Uniform Building Code.

UBC 2305(d) This amendment is resubmitted to the 1976 UBC in order to provide the design criteria for snow loading across the state. It also takes into consideration the requirements for differential loading and snow drift load configurations and some load failures have occurred to predicate the retention of this amendment in the Code.

UBC 2312(a) After a study and review of the Seismic requirements in the code for the State of Minnesota, the Structural Subcommittee of the Building Code Standards Committee recommends that the State be placed in a Seismic Zone "0" No Damage Area as identified in Chapter 23 of the code. Even though there has been a tremor in the recent past the design considerations for wind loading will for the most part, out weigh the seismic design requirements. Minnesota has been classified either by code or code amendment since the inception of the code in Seismic Zone "0" and the committee feels that there is no immediate problem in remaining in that classification.

UBC 2907(a) This amendment establishes the frost depth zones for footing depth requirements in the State of Minnesota. This is a previous amendment and should be retained to maintain a continuity in the requirements for the footing designs.

UBC 3205(c) The last paragraph of this section is deleted by this amendment. The paragraph deleted would prohibit the use of eave or cornice vents in most roof structures of residential occupancies. The atmosphere or climate conditions experienced in the State of Minnesota required adequate ventilation of attic spaces. Although the application of the provision would deter the spread of fire through combustible attics, the problems created by inadequate ventilation would be far more prevelant in an area where the temperature varies or greatly as it does in the State of Minnesota which would create a multitude of condensation and resultant deterioration problems.

UBC 3303(a) This section is amended to include the requirements for a door meeting the minimum width and height for exit doors that serve dwelling units or guest rooms within a structure as well as the requirement for the primary entrance/exit door. This would provide for adequate egress in emergencies as well as better mobility when moving furnishings through the door openings.

UBC 3304(h) Exception number 2 is added to this section to permit an alternate method of construction for openings in corridors when certain other criteria is met. This provides for the construction of skyway systems and mall corridors to serve area by providing a certain amount of openness. This exception is in the present code and is worthy of continued consideration.

Exception number three is deleted from the amendments because of the availability of door closing hardware that will allow the corridor doors on Group I occupancies to be free swinging and close automatically when emergencies such as smoke or fire is detected and an alarm situation is indicated to the control devices.

UBC Table 33-A This column and the corresponding footnotes to this table are deleted because the acress/egress requirements are included in amendment UBC Chapter 55 of the code.

UBC 3318(c) An additional paragraph is added to this section to reduce the self-closing or automatic closing requirements for corridors that serve areas in Group I occupancies where the use of such doors would be under a controlled condition at all times. This normally applies to situations where the persons liberty would be restrained.

UBC 3801(c) This amendment is added to the definitions of this section to describe the type of standpipe. This section is currently an amendment to the code and should be retained to provide for continuity and uniformity of life safety provisions.

UBC 3802(b)5 Exception number tow has been an amendment to this section and is retained as an amendment to the UBC 1976 to permit the omission of automatic fire extinguishing equipment from certain rooms when detectors of products of combustion are installed in such rooms. This exception is only applicable to buildings of Type II - one hour construction.

UBC 3802(d) This amendment is retained from the previous amendments and is necessary to assure that in occupancies where commercial cooking equipment is installed that these areas of equipment even though the remaining portions might not require automatic fire extinguishing equipment.

UBC 3803(a)(b)(c)(d) This section describes the requirements for the installation of the Fire Department Standpipes. This amendment provides for a more ready source of water for fire fighting purposes and will afford a time saving factor when the need arises. This item has been a part of the State code since 1973 and should be retained as an amendment to UBC 1976 code.

UBC 3803(e) This item provides for the installation of a dry standpipe in buildings when it is approved by the local Fire Chief. This item is also retained from previous amendments to the code.

UBC 3804(b) This item is retained as an amendment to UBC 1976 from the previous code. It provides for the deletion of a wet standpipe in Education Occupancies and residential occupancies of the Group R Division 1 classification. It also reduces the number of story height of 4 to 3 in establishing the requirements as to when they are to be installed. Maintenance and control of these units have been a problem in the deleted occupancies and presents a lesser problem for the fire services.

UBC Chapter 50 This chapter is deleted in its entirety and Section 301 through 337 of the State Building Code is substituted therein. This section deals with the existing code for manufactured structures and will be retained as previously published.

UBC Chapter 51 This chapter is deleted in its entirety and SBC section 8801 through 8810 is substituted therein. This section of the SBC has been in place since the inception of the code and should be retained to provide for continuity and uniformity of the code requirements.

UBC Chapter 55 These are the same items for facilities for the handicapped that have appeared in the code since its promulgation and remains unchanged except for the editorial change for occupancy classification in Section 5501(b)1 and the addition of item number 7 to this section. This chapter in toto addresses the requirement to be met to provide for accessibility and usability of structures and fixtures for the handicapped. This item should be retained to provide continuity of the provisions in the code.

UBC 8601 These items have been added to the list in this section which cross references various sections of the code where consideration of electrical provisions must be identified.

SBC 304 The items addressed in this portion of the code establishes additional criteria necessary for the approval of plans submitted for construction of manufactured structures, evidence of complying with the energy conservation requirements and an increase in seal fees to help defray the cost.

UBC 3203(d)3 Amendments submitted by Sol J. Jacobs, Director of Inspections, City of Minneapolis.

This proposal is included in keeping with Minn. Stats. 1976 Section 16.86 subdivision 6. This item is concerned with roof ice build up problems.

UBC 3207(c) This amendment is submitted by the Council on Plumbing Code and Examinations, Department of Health. This proposal is included in keeping with Minn. Stats. 1976 Section 16.86 Subdivision 6. This item will required roof drains to discharge above grade.

UBC 4506(d) This amendment is submitted by the Acme Awning Co., Minneapolis, and the Department of Inspections, City of Minneapolis. This proposal is included in keeping with Minn. Stats. 1976 Section 16.86 Subdivision 6. This item seeks a reduction in height clearance for awnings above the public walkway.

Amendments to the Plumbing Code There are 16 items in this proposal which reflect changes in the use of some materials. This proposal is submitted and recommended by the Council on Plumbing Codes and Examinations. The proposal is included in keeping with Minn. Stats. 1976 16.86 Subdivision 6.

MHD 124(a)(2)(11-4) This proposed amendment is submitted by the M. G. Coupling Company, Los Angeles, California and recommended by the Council on Plumbing Codes and Examinations. The proposal is included in keeping with Minn. Stats. 1976, 16.86 Subdivision 6. This proposal would permit addition materials to be used in the connection of hubless cast iron pipe.

MHD 123(9)(ff), MHD 123(11)(hh) and MHD 124 (11)(mm) This proposed amendment is submitted by S. D. McCullough, Genova-Minnesota, and recommended by the Council on Plumbing Codes and Examinations. The proposal is included in keeping with Minn. Stats. 1976, 16.862 Subdivision 6. This proposal would permit the use of expansion and contraction joints in plastic piping.

SBC 8806 This proposal includes various amendments to the elevator code as recommended by the Elevator Code Subcommittee. The proposal is included in keeping with the Minn. Stats. 1976, 16.86 Subdivision 6. The items to be included or changed are for the purpose of including current changes to the ANSI standards, NFPA Standard and so minor editorial changes that will reflect the current state of the art in elevator construction and installation.

UBC Appendix Chapter 32 This appendix item is recommended by the Building Code Division for inclusion in the code. This new Appendix Chapter establishes minimum requirements applicable to re-roofing existing buildings. Section 3210 requires that new roof covering shall not be applied over existing roofs without first obtaining an inspection and written approval from the building official. Section 3211 contains requirements for re-roofing over built-up roof construction, and Section 3210 contains re-roofing requirements for application over shakes and shingles. This appendix item was approved at the annual meeting of ICBO in 1976 and will be a part of the 1979 Edition when it is published. Some direction in coping with re-roofing has been needed for some time and this appears to be a viable solution.

UBC Appendix Chapter 41 This appendix chapter is known as the security code and is proposed for inclusion by the Task Force of the Governors Commission on Crime Prevention and Control. The proposal is patterned after a national study on the same subject and reflects standards that have been subjected to testing and evaluation which are believed to be adequate for the level of control necessary for residential types of occupancies. This proposal is included in keeping with Minn. Stats. 1976, 16.62 Subdivision 6.

These proposed rules, if adopted, will bring about changes that will place nationally recognized standards and refined changes in line with the state of the art in the use of materials and methods of construction within the State of Minnesota. Copies of the proposed rules are now available and one free copy may be obtained by writing to the Building Code Division, 408 Metro Square Building, 7th and Robert Streets, St. Paul, Minnesota 55101. Additional copies will be available at the door on the date of the hearing. The agency's authority to promulgate the proposed rules is contained in Minn. Stat. 16.86 (1974). A "statement of need" explaining why the agency feels the proposed rules are necessary and a "statement of evidence" outlining the testimony they will be introducing will be filed with the Hearing Examiners Office at least 25 days prior to the hearing and will be available there for public inspection.

Please be advised that pursuant to Minn. Stat. 10A.01, subd. 11 (1974) any individual engaged for pay or other consideration for the purpose of representing persons or associations attempting to influence administrative action, such as the promulgation of these rules, must register with the State Ethics Commission as a lobbyist within five days of the commencement of such activity by the individual.

Date: 10/27/77

Richard L. Brubacher

Richard L. Brubacher
Commissioner of Administration

STATE OF MINNESOTA

DEPARTMENT OF ADMINISTRATION

IN THE MATTER OF THE
PROPOSED ADOPTION OF
AMENDMENTS TO THE
STATE BUILDING CODE

ORDER FOR HEARING

IT IS HEREBY ORDERED that a public hearing on the above-captioned rules be held in Room 83, State Office Building, Aurora and Fuller Streets, St. Paul, Minnesota on November 28, 1977 commencing at 10:00 a.m. and continuing until all persons have had an opportunity to be heard.

IT IS FURTHER ORDERED that a Notice of Hearing be mailed to all persons or representatives of associations or other interested groups who have registered their names with the Secretary of State for that purpose.

IT IS FURTHER ORDERED that the Notice of Hearing be published in the State Register.

Date: 10/11/77

Richard L. Brubacher
Commissioner of Administration

STATEMENT OF COMPLIANCE

WITH MANUAL OF RULE

MAKING PROCEDURES

I, Special Assistant Attorney General Sheila S. Fishman, do hereby declare that I have examined the proposed rules and all related documents and that, based on them and my personal familiarity, all applicable procedures, have been followed.

Sheila S. Fishman

SHEILA S. FISHMAN
Special Assistant
Attorney General

Dated 11 Aug 1978

ADOPTION OF AMENDMENTS TO THE

STATE BUILDING CODE

Public Hearing
November 28, 1977

State of Minnesota
Department of Administration
Building Code Division
408 Metro Square Building
7th and Robert Streets
St. Paul, Minnesota 55101

THE COMPOSITION AND USE OF THE

STATE BUILDING CODE

The State Building Code, to be known as the "Code", includes several documents or codes pertaining to buildings. They are as follows:

1. State Building Code regulations known and identified by the prefix "SBC".

2. SBC adopting by reference the following codes:

   (a) 1976 Edition of the Uniform Building Code, identfied as "UBC";

   (b) 1975 National Electrical Code, identified as "NEC";

   (c) 1971 American National Standard Safety Code for Elevators, Dumbwaiters, Escalators, and Moving Walks, identified as ANSI A17.1-1971 and Supplements ANSI A17.1a-1972, ANSI A17.1b-1973, ANSI A17.1c-1974, ANSI A17.1d-1975, ANSI A17.1e-1975, ANSI A17.1f -1975 and ANSI A17.1g-1976.

   (d) 1976 Minnesota Plumbing Code, identified as MHD 120 through MHD 135;

   (e) "Flood Proofing Regulations", Office of the Chief Engineers, U.S. Army

3. SBC Minnesota Heating, Ventilating, Air Conditioning and Refrigeration Code, identified as SBC 7101 through 8505.

4. "Design and Evaluation Criteria for Energy Conservation in New Buildings, Additions and Remodeled Elements of Buildings and Standards for Certain existing Public Buildings," identified as SBC 2MCAR Section 1.16001 through SBC 2MCAR Section 1.16006 . (SBC 6007 through SBC 6013 reserved for future use.)

5. State of Minnesota Mobile Home Installation Standards 1977, identified as 2MCAR § 1.90450 and related definitions in 2MCAR § 1.90103

6. Certain appendices which contain the listing of various National Standards referred to in the body of the code; technical requirements for fallout shelters; and various chapters of those codes adopted by reference which chapters may be adopted by municipalities and administered and enforced by such municipalities. The Code is to be used in its entirety by the municipalities in administering and enforcing the Code as well as by designers and builders in their designs and construction of structures. It is necessary to use the entire Code to ensure uniformity in compliance with the Code as well as uniformity in its administration and enforcement.

The above referenced SBC and MHD Codes are available from the Department of Administration Documents Section, 140 Centennial Office Building, St. Paul, Minnesota 55155.

Other codes are available from the publishers of the codes.

(a) Uniform Building Code:

International Conference of Building Officials

5360 South Workman Mill Road

Whittier, California 90601

(b) National Electrical Code:

National Fire Protection Association

470 Atlantic Avenue

Boston, Massachusetts 02110

(c) American National Standard Safety Code for Elevators, Dumbwaiters, Escalators, and Moving Walks:

American Society of Mechanical Engineers
United Engineering Center
345 East 47th Street
New York, New York 10017

(d) ASHRAE Standard 90-75

American Society of Heating, Refrigeration,
and Air-Conditioning Engineers Inc.
New York, New York 10017

Each provision of SBC 101 through SBC 111 and 201, 202, 203 and 204 is deleted in its entirety, and the following is adopted in lieu thereof:

Table of Contents

SBC 101 Title

SBC 102 Purpose and Application

SBC 103 Definitions

SBC 104 Scope

SBC 105 Fallout Shelter

SBC 106 State-owned Buildings

SBC 107 Plan Checking Fees

SBC 108 Disclaimer Clause

SBC 109 Appendices

SBC 110 Adoption of Flood Proofing Regulations

SBC 111 Adoption of "Uniform Building Code" by Reference

SBC 112 Validity

MINNESOTA STATE BUILDING CODE

SBC 101 TITLE Rules and Regulations.

The rules and regulations contained in this Code and rules and standards adopted by reference therein shall be collectively known as the Minnesota State Building Code, and may be cited as such and will be referred to herein as "this code".

SBC 102 Purpose and Application

The pupose of this Code is to provide uniform standards to safeguard life or limb, health, property and public welfare by regulating and controlling design, construction, quality of materials, use and occupancy of all buildings and structures.

The State Building Code shall apply state-wide and supersede the building code of any municipality. The State Building Code shall not apply to agricultural buildings except with respect to state inspections required or rulemaking authorized.

Wherever the term "Administrative Authority" appears in this Code the words "Building Official" shall be substituted therefore.

Wherever the terms "Mayor" or "City Council" appear in this Code the words "Governing Body" shall be substituted therfore.

1. "City" means a home rule charter or statutory city.
2. "Code" means the State Building Code or any amendments thereof.
3. "Municipality" means any city, county, or town.
4. "Town" shall be defined as a town meeting the requirements of Minnesota Statutes § 368.01.

SBC 104 Scope

The provisions of this Code shall apply to the construction, alteration, moving, demolition, repair and use of any building or structure within the municipality, except work located primarily in a public way, public utility towers and poles, mechanical equipment not specifically regulated in this Code, and hydraulic flood control structures.

Additions, alterations, repairs and changes of use or occupancy in all buildings and structures shall comply with the provisions for new buildings and structures except as otherwise provided in UBC Sections 104, 306 and 502 of this Code. Where, in any specific case, different sections of this Code specify different materials, methods of construction or other requirements, the most restrictive shall govern.

Wherever in this Code reference is made to the Appendix, the provisions in the Appendix shall not apply unless specifically adopted.

The provisions of this Code relating to fallout shelters shall apply only to state-owned buildings.

SBC 105 Fallout Shelters. Whenever it has been determined by the Department of Public Safety, Division of Civil Defense and the State Architectural Engineer that fall-out protection is needed for a particular location the "Technical Requirements for Fall-Out Shelters" as contained in Appendix "A" shall be complied with.

SBC 106 State-owned Buildings. State owned buildings shall mean all buildings and structures financed in whole or in part by state funds and which are under the exclusive jurisdiction and custodial control of one or more state department or agencies.

SBC 107 State Plan Checking Fees

Plan checking of buildings or structures conducted by the Division shall have a fee based on valuation in accordance with Table No. 107-A. "Valuation" means the total cost of construction exclusive of site work not related to the construction.

There shall be no additional fee charge for consultation with designers, or for re-checking provided no substantial change in the design has been made. When, in the opinion of the Division, a substantial change has been made in the design, the re-checking fee shall be based on a rate of $15.00 per hour or fraction thereof. No fee shall be charged for state-owned buildings.

TABLE NO. 107A

VALUATION	PLAN CHECK FEE
$ 3,000.00 or less	No Charge
3,001.00 to 5,000.00	$ 21.00
5,001.00 to 10,000.00	34.00
10,001.00 to 15,000.00	47.00
15,001.00 to 20,000.00	60.00
20,001.00 to 25,000.00	72.00
25,001.00 to 30,000.00	83.00
30,001.00 to 35,000.00	93.00
35,001.00 to 40,000.00	102.00
40,001.00 to 45,000.00	112.00
45,001.00 to 50,000.00	122.00
50,001.00 to 55,000.00	129.00
55,001.00 to 60,000.00	135.00
60,001.00 to 65,000.00	142.00
65,001.00 to 70,000.00	148.00
70,001.00 to 75,000.00	155.00
75,001.00 to 80,000.00	161.00
80,001.00 to 85,000.00	168.00
85,001.00 to 90,000.00	174.00
90,001.00 to 95,000.00	181.00
95,001.00 to 100,000.00	187.00
100,001.00 to 500,000.00	187.00 for the first $100,000.00 plus $1.00 for each additional $1,000.00 or fraction thereof.
500,001.00 and up	577.00 for the first $500,000.00 plus $.65 for each additional $1,000.00 or fraction thereof.

SBC 108 Disclaimer Clause. The inclusion of specific requirements relative to the manner of installation of any plant or equipment in any one or more parts of said Code shall not limit this procedure to any particular type of installer nor provide a basis upon which determination of the right to perform such procedures shall be made. The authority for such determination will be found in the various licensing statutes or ordinances for each type of installer who performs the work.

SBC 109 Appendices (a) The following appendices, annexes and supplemental material listed in the code shall be mandatory to enforce by any municipality.

1. SBC 111 Appendix "A" Technical Requirements for Fallout Shelter
2. SBC 111 Appendix "B", Variation in Snow Loads
3. 1976 UBC Appendix, Chapters 23, 35
4. Minnesota Plumbing Code Appendix B

(b) The following appendices, annexes and supplemental material listed in the Code shall not be mandatory but may be adopted without change at the discretion of any municipality.

1. SBC 111 Appendix "C", Abbreviations and addresses of Technical Organizations.
2. 1976 UBC Appendix, Chapters, 13, 15, 38, 48, 49, 51, 57 and 70.
3. Minnesota Plumbing Code Appendices A, C, D, E and F.
4. Flood Proofing Regulations, Sections 201.2 through 208.2
5. SBC 111 Appendix "D", Building Security SBC 4101 - 4110.

SBC 110 Adoption of "Flood Proofing Regulations."

Sections 100 through 1406 of the 1972 Edition of "Flood Proofing Regulations" as promulgated by the Office of the Chief Engineers, U.S. Army, Washington, D.C. is incorporated by reference and hereby made a part of the State Building Code subject to the following amendments:

(Sections 201.2 through 208.2 are placed in the appendix of this Code.)

Section 200.2 is amended to read as follows:

Official Flood Plain Zoning Map: The Official Flood Plain Zoning Map showing the extent and boundaries of the Primary and Secondary Flood Hazard Areas is hereby

declared and established as part of these Regulations. Hereinafter reference to th term Primary Flood Hazard Areas in these regulations shall be synonymous with the term "flood plain areas" as used in the Minnesota Regulations NR 85-93.

Section 200.3 is amended to read as follows:

Regulatory

Flood Datum: For the purpose of these regulations, the Regulatory Flood Datum,or as hereinafter referred to as the "RFD", is hereby declared and established for use as the reference datum for determining the elevation above mean sea level to which flood-proofing protection shall be provided. Hereinafter reference to the term "Regulatory Flood Datum" in these regulations shall be synonymous with the term "flood protection elevation" as used in Minnesota Regulations NR 85-93.

Section 201.1 is amended to read as follow:

Application: These regulations shall apply to the construction, alteration, and repair of any building or parts of a building or structure in the Flood Hazard Area(s) of the municipalities. Additions, alterations, repairs and changes of use occupancy shall comply with all provisions for new buildings and structures as otherwise required in the Building Code, except as specifically provided in these Regulations.

Section 201.2 is amended to read as follows:

Nonconforming Use: A structure or the use of a structure or premises which was lawful before the passage or amendment of the ordinance but which is not in conformity with the provisions of these Regulations may be continued subject to th following conditions:

1. No such use shall be expanded, changed, enlarged or altered in a way which

increases its nonconformity.

2. No structural alteration, addition, or repair to any conforming structure over the life of the structure shall exceed 50 percent of its value at the time of its becoming a nonconforming use, unless the structure is permanently changed to a conforming use.

3. If such use is discontinued for 12 consecutive months, any future use of the building premises shall conform to these Regulations. The assessor shall notify the zoning administrator in writing of instances of non-conforming uses which have been discontinued for a period of 12 months.

4. If any nonconforming use or structure is destroyed by any means, including floods, to an extent of 50 percent or more of its assessed value, it shall not be reconstructed except in conformance with the provisions of these Regulations; provided, the Board of Appeals may permit reconstruction if the use or structure is located outside the floodway and is adequately and safely flood-proofed, elevated, or otherwise protected in conformance with these Regulations.

5. Uses or adjuncts thereof which are or become nuisances shall not be entitled to continue as nonconforming uses.

6. Except as provided in "The Building Code," any use which has been permitted as a special exception shall not be deemed a nonconforming use but shall be considered a conforming use.

7. Any alteration, addition, or repair to any nonconforming structure which would result in substantially increasing its flood damage or flood hazard potential shall be protected as required by these Regulations.

8. The Building Official shall maintain a list of nonconforming uses including the date of becoming nonconforming, accessed value at the time of its becoming a nonconforming use, and the nature and extent of nonconformity. This list shall be brought up-to-date annually.

9. The Building Official shall prepare a list of those nonconforming uses which have been flood-proofed or otherwise protected in conformance with these regulations He shall present such list to the Board of Appeals which may issue a certificate to the owner stating that such uses, as a result of these corrective measures, are in conformance with these Regulations.

Section 203.3 is amended to read as follows:

Records. Copies of such tests, reports, certifications, or the results of such test shall be kept on file in the office of the Building Official for a period of not les than two (2) years after the approval and acceptance of the completed structure for beneficial occupancy.

Section 204.6 is amended to read as follows:

Board of Appeals: In order to determine the suitablity of alternate materials and methods of construction and to provide reasonable interpretations of the provisions herein, there shall be and is hereby created a Board of Appeals of five (5) members Each member of the Board shall be a licensed professional architect or engineer, or builder or superintendent of building construction, with at least ten years experience, for five years of which he shall have been in responsible charge of wor

At no time shall there be more than two members from the same profession. At least one of the members shall be a licensed structural or civil engineer with architectural engineering experience. The Board shall adopt reasonable rules for its investigations and shall render written decisions to the Building Official.

Section 204.7 is amended to read as follows:

Validity: It shall be unlawful for any person, firm or corporation or agency (state or local) to erect, construct, enlarge, alter, repair, move, improve, remove, convert, or demolish, any building or structure in the Flood Hazard Area(s), or cause the same to be done, contrary to or in violation of any of the provisions of these Regulations and/or "The Building Code".

Section 205.1 is amended to read as follows:

Statement of Intention to Improve: The Owner or any registered architect or licensed professional engineer authorized to represent the Owner shall, before preparing final plans for any improvement in the Flood Hazard Area(s), file with the Building Official a Statement of Intention to Improve, including a brief description of the type of improvement being considered and giving its precise location, on a form provided by the Building Official. The Building Official shall note on two copies the elevation of the RFD at the location of the proposed improvement. One copy of the Statement of Intention to Improve shall be retained by the Building Official until a permit copy for improvement on the site is approved or one year has elapsed; a second copy shall be returned to the Owner for his use in final siting and design of his improvement. Assignments of the RFD elevations at all locations shall be made from profiles and/or cross sections provided by the Army Corps of Engineers, SCS, USGS. This information shall be open to public examination at all reasonable times.

Section 205.2 is amended to read as follows:

Permits Required: No person, firm or corporation shall erect, construct, alter, repair, move, remove, convert, or demolish any building or structure or any part thereof, or make any other improvement within the structure or any part thereof, or make any other improvement within the Flood Hazard Area(s), or cause same to be done, without first obtaining a separate building flood proofing permit for any such improvement from the Building Official. Ordinary minor repairs may be made with the approval of the Building Official without a permit, provided that such repairs shall not violate any provisions of these Regulations or of "The Building Code".

Section 205.3 No. 2 is amended to read as follows:

Two (2) sets of complete plans and specifications, in addition to plans and specifications required by "The Building Code", except that plans and specifications for any and all proposed improvement in the primary Flood Hazard Area(s) shall be prepared by an engineer or architect licensed by the State to practice as such. All drawings and specifications shall bear the name of the author thereof in his true name, followed by such title as he may be lawfully authorized to use. All plans and sections shall be noted with the proposed flood-proofing class of each space below the RFD including detail drawings of walls and wall openings.

Section 205.3 is amended to read as follows:

Two (2) copies of the Owner's Contingency Plan, which shall describe in detail all procedures for temporary placement and removal or contingent protection proposed items in spaces affected by these Regulations including:

1. Plans and schedules for items to be removed and locations of places above the

RFD to which they will be removed if these contents violate restrictions associated with the flood-proofing class of the space in which they are placed temporarily, including specific organizational responsibilities.

2. Procedures, materials and equipment for protecting items required to have protection by their flood-proofing class, but for which this protection is proposed to be provided contingently, including specific organizational responsibilities for accomplishing this protection.

Waivers of restrictions implicitly requested by submission of the Owner's Contingency Plan may be granted by the Building Official as provided by 1101.2.

Section 209.1 is amended to read as follows:

New Building and Structures: Every building or structure hereafter erected, that is located in the primary Flood Hazard Area(s) where the ground surface is two (2) feet or more below the RFD, or where flood water velocities may exceed five (5) feet per second, shall be provided with an enclosed refuge space above the RFD, of sufficient area to provide for the occupancy load with a minimum of 12 square feet per person. It shall be provided with one or more exits through the exterior walls above the RFD to an exterior platform and stairway not less than three (3) feet wide.

Section 209.3 is amended to read as follows:

Use of Space Below the Regulatory Flood Datum: No floor level or portion of the building or structure that is below the RFD regardless of structure or space classification shall be used for human occupancy, or for storage of any property, materials, or equipment that might constitute a safety hazard when contacted by floo waters.

Section 210.7 is amended to read as follows:

Placard Types: Placards shall be white rigid plastic or other non-water susceptible material eight (8) inches long and twelve (12) inches wide, and shall have printed theron in black letters the information shown in Figure 2.

Section 300.0 is amended by adding a subsection to read as follows:

Section 300.2 Interpretation: For the purpose of these regulations, where definition of terms as set forth in this Chapter conflict in meaning with those as set forth in Minn. Regs. NR 85(c), the latter shall take precedence.

Section 301.2.9 is amended to read as follows:

Habitable Room: A space used for living, sleeping, eating or cooking, or combination thereof, but not including bathrooms, toilet compartments, closets, halls, storage rooms, laundry and utility rooms, cellars and similar spaces.

Section 301.4.1 is amended to read as follows:

Building Code: The State Building Code setting forth standards for theconstruction addition and modification and repair of buildings and other structures for the purpose of protecting health, safety, and general welfare of the public.

Section 402.1 (Table 2) is amended to read as follows:

General: Table 2 indicates the various degrees of protection required to permituse of spaces for each flood-proofing, the chart in itself shall not be construed as

being exhaustive with respect to all requirements imposed by these Regulations. In disputes arising over the intepretation of this chart, the written provisions of these Regulations shall be considered as definitive.

Table 2
SPACE CLASSIFICATION CHART

FLOOD-PROOFING CLASSIFICATION OF SPACES									
	MINIMUM REQUIREMENTS								
Flood-Proofing Classes	Water-Proofing	Structural Loads	Closure of Openings	Internal Flooding & Drainage	Flooring	Walls and Ceilings	Contents	Electrical	Mechanical
W1 Completely Dry	Type A	Class 1	Type 1	See Chapter 8	Class 1	Class 1	Class 1	See Chapter 12	See Chapter 13
W2 Essentially Dry	Type B	Class 1	Type 2		Class 2	Class 2	Class 2		
W3 Flooded with Potable Water	Type A	Class 2	Type 3		Class 3	Class 3	Class 3		
W4 Flooded with Flood Water	Type C	Class 3	Type 4		Class 4	Class 4	Class 4		
W5 Non-Flood-Proofing	—	—	Type 5		Class 5	Class 5	Class 5		

Section 612.2.1 is amended to read as follows:

Natural Terrain: In addition to the requirements of "The Building Code", the building shall be located not less than fifteen (15) feet back from the line of incidence of the RFD on the ground, foundation design shall take into consideration the effects of soil saturation on the performance of the foundation, the effects of flood waters on slope stability shall be investigated, normal access to the building shall be by direct connections with areas above the RFD and all utility service lines shall be designated and constructed as required to protect the building and/or its components from damage or failure during a flooding event to the RFD.

Section 612.2.2 is amended to read as follows:

Building on Fill: The building and all parts thereof may be constructed above the RFD on an earth fill. Prior to placement of any fill or embankment materials, the area upon which fill is to be placed, including a five-foot strip measured horizontally beyond and contiguous to the toe line of the fill, shall be cleared of standing trees and snags, stumps, brush, down timber, logs and other growth, and all objects including structures on and above the ground surface or partially buried. The area shall be stripped of topsoil and all other material which is considered unsuitable by the Building Official as foundation material. All combustible and noncombustible materials and debris from the clearing, grubbing and stripping operations shall be removed from the proposed fill area and disposed of at locations above the RFD and/or in the manner approved by the Building Official. Fill material shall be of a selected type, preferable granular and free-draining placed in compacted layers. Fill selection and placement shall recognized the effects of saturation from flood waters on slope stability, uniform and differential settlement, and scour potential. The minimum elevation of the top slope for the fill section shall be no more than one foot below the RFD. Minimum distance from any point of the

building perimeter to the top of the fill slope shall be either fifteen (15) feet or twice the depth of fill at that point, whichever is the greater distance. This requirement does not apply to roadways, driveways, playgrounds and other related features which are not integral and functional parts of the building proper. Fill slopes for granular materials shall be not steeper than one vertical on one and one-half horizontal, unless substantiating data justifying steeper slopes are permitted to the Building Official and approved. For slopes exposed to flood velocities of less than five (5) feet per second, grass or vine cover, weeds, bushes and similar vegetation undergrowth will be considered to provide adequate scour protection shall be provided.

Section 802.1 is amended to read as follows:

Applicability: Spaces to be intentionally flooded with flood water (W4) shall be provided with the necessary equipment, devices, piping, controls, etc. necessary for automatic flooding during the flood event and drainage system(s) shall utilize approved piping materials and have sufficient capacity for raising or lowering the internal water level at a rate comparable to the anticipated rate of rise and fall of a flood that would reach the RFD. These pipe systems shall be directly connected to the external flood waters to maintain a balanced internal and external water pressure condition. Provisions shall be made for filling the lower portions of the structure first and for interconnections through or around all floors and partitions to prevent unbalanced filling of chambers or parts within the structures. All spaces below the RFD, shall be provided with air vents extending to at least three (3) feet above the elevation of the RFD to prevent the trapping of air by the rising water surface. All openings to the filling and drainage systems shall be protected by screens for grills to prvent the entry or nesting of rodents or birds in the system.

Section 1301.2.1 is amended to read as follows:

Heating systems utilizing gas or oil fired furnaces shall have a float operated automatic control valve installed in the fuel supply line which shall be set to operate when flood waters reach an elevation equal to the floor level of the space where furnace equipment is installed. A manually operated gate valve that can be operated from a location above the RFD shall be provided in the fuel supply line to serve as a supplementary safety provision for fuel cutoff. The heating equipment and fuel storage tanks shall be mounted on and securely anchored to a foundation pad or pads of sufficient mass to overcome buoyancy and prevent movement that could damage the fuel supply line. As an alternate means of protection, elevation of heating equipment and fuel storage tanks above the RFD on platforms or by suspension from overhead structural systems will be permitted. All unfired pressure vessels will be accorded similar treatment. Fuel lines shall be attached to furnaces by means of flexible or swing type couplings. All heating equipment and fuel storage tanks shall be vented to an elevation of at least three (3) feet above the RFD. Air supply for combustion shall be furnished if required for systems installed in W1 or W2 spaces and piping or duct work for such purposes shall be terminated at least three (3) feet above the RFD.

Section 1302.2.2 is amended to read as follows:

Where the state of dryness of a space is dependent on a sump pump system, or where the stability of a structure during a flood event depends on the relief of up-lift pressures on building components, all interior storm water drainage or seepage, appliance drainage, and underslab drain tile systems shall be directly connected to a sump (pump) and discharged at an elevation at least three (3) feet above the RFD.

Section 1302.2.3.1 is amended to read as follows:

All vents shall extend to an elevation of at least three (3) feet above the RFD.

Section 1302.3 is amended to read as follows:

Sewage Disposal/Treatment. Individual sewage disposal and/or treatment facilities will be permitted in a Flood Hazard Area but only at locations where connection with a public sewer system is not permissible or feasible. Such facilities shall conform to applicable standards, criteria, rules and regulations of the Minnesota Department of Health and Pollution Control Agency in terms of size, construction, use and maintenance and with standards and criteria of the Minnesota Department of Natural Resources regarding setbacks from the normal high water mark of a water-course in accordance with the public water classification. Installations in low swampy areas or areas where the highest known ground water table is within four feet of the bottom of the soil absorption system or which may be subject to recurrent flooding will not be permitted.

Section 1302.3.1 regarding cesspools/sewage disposals has been amended by deleting this section in its entirety.

Section 1302.3.2 regarding seepage pits has been amended by deleting this section in its entirety.

Section 1302.4.1 is amended to read as follows:

Water supply wells, tanks, filters, softeners, heaters, and all appliances located below the RFD shall be protected against contamination by covers, walls, copings, or castings. All vents shall be extended to a minimum elevation of three (3) feet above the RFD.

"FLOOD PROOFING REGULATIONS"

Available from

SBC 111 Adoption of the Uniform Building Code by Reference.

Chapters 2 through 60 and the appendix of the 1976 Edition of the Uniform Building Code, hereinafter "UBC", as promulgated by the International Conference of Building Officials, is incorporated by reference and is hereby made part of the State Building Code (SBC) except as qualified by SBC 109. Said UBC shall be subject to the following alterations and amendments:

UBC 101, 102 and 103 are deleted in their entirety.

UBC 104(j) is amended by adding an additional item number 5 as follows:

5. All approvals must be based on the applicants submission of complete architectural and engineering plans and specifications.

UBC 204 is amended by amending the last sentence as follows: The Board shall adopt reasonable rules and regulations for conducting its investigations and shall render all decisions and findings in writing to the Building Official with a duplicate to the applicant and to the State Building Inspector within fifteen (15) days of such decision.

UBC 303(a) is amended by adding an additional sentence to the first paragraph as follows: The fee schedule of Table 3-A is hereby made optional for use by the local authority and is a recommended schedule. Each municipality must adopt its own schedule of permit fees.

Section 420 of the UBC is amended to read as follows:

UBC 420 Definitions

Supervised Living Facilities

Class A supervised living facilities shall include homes providing boarding and lodging for ambulatory and mobile disabled persons who are capable of semi-independent living with minimum supervision and who are mentally and physically capable of self-preservation under emergency conditions. Physically handicapped persons shall be housed at street level. See UBC 1301 as amended.

Class B supervised living facilties shall include homes providing boarding and lodging for:

1. Mobile disabled persons who are capable of semi-independent living with minimum supervision, but who are not physically capable of self-preservation;

2. Persons with diverse dependencies who require various degrees of supervised guidance and assistance, and who are not mentally or physically capable of self-preservation under emergency conditions. See UBC 901 as amended.

UBC Table 5-A is amended to read as follows:

UBC 501 Table 5-A

I.1 Nurseries for full time care of children under kindergarten age. Hospitals, sanitariums, nursing homes, and similar buildings (each accomodating five or more persons).

I.2 Boarding care homes, detoxification center, homes for children of

kindergarten age or over, supervised living facilities Class B as defined in UBC 420 (each accomodating five or more persons).

R-1 Hotels and apartment houses. Convents, monasteries (each accomodating more than ten persons). Supervised living facilities Class A as defined in UBC 420 (accomodating five or more persons).

Chapter 5 of the UBC is amended by adding a new section to read as follows:

UBC 512 Roof Access. Unless specifically exempted by the Building Official due to space limitation, roof height above grade or other special considerations, buildings on which any heating, air conditioning, or refrigeration equipment is hereafter installed on the roof and which equipment will require periodic inspection, service and maintenance in accordance with the mechanical code -- SBC 7101 through SBC 8810 shall meet the following requirements:

A stairway complying with Chapter 33 or a stair leading to a scuttle or bulkhead in the roof having such equipment shall be provided to make such equipment safely accessible. Said stair leading to the scuttle or bulkhead shall be placed at an angle of not more than 60 degrees measured from the horizontal with flat treads not less than six inches in width and a minimum length of 24 inches at the tread. No riser shall be more than nine inches and handrails shall be provided on both sides of the access stairs. The minimum opening of the scuttle or bulkhead shall be not less than two feet. In no case shall this required access be located in or pass through the elevator shaft or elevator machine room.

Equipment should be located with at least six feet of clearance from the edge of the roof or similar hazards. If the clearance is less than six feet, a suitable rail or guard not less than forty-two inches in height shall be provided.

Each unit of equipment shall have an accessible disconnect switch. A 20 ampere 110-120 volt AC ground type convenience outlet shall be installed on the roof adjacent to the unit or equipment. The circuit for this convenience outlet shall have approved ground-fault protection and shall not be connected to the equipment circuit.

Section 605 of the UBC is amended to read as follows:

UBC 605 Light, Ventilation and Sanitation. All enclosed portions of Group A, Division 1 Occupancies customarily used by human beings and all dressing rooms shall be provided with natural light by means of exterior glazed openings with an area not less than one tenth of the total floor area, and natural ventilation by means of openable exterior openings with an area of not less than one-twentieth of the total floor area or shall be provided with artificial light and a mechanically operated ventilating system. The mechanically operated ventilating system shall supply a minimum of five (5) cubic feet per minute of outside air with a total circulated of not less than 15 (fifteen) cubic feet per occupant in all portions of the building and such system shall be kept continuously in operation during such times as the building is occupied. If the velocity of the air at the register exceeds 10 (ten) feet per second, the register shall be placed more than eight (8) feet above the floor directly beneath.

Lights in all parts of the building customarily used by human beings shall be on a separate circuit from that of the stage and shall be controlled from the box office. All lights in corridors, exit courts and exit passageways shall be protected by a wire cage.

All registers or vents supplying air backstate shall be equipped with automatic closing devices with fusible links. Such closing devices shall be located where the vents or ducts pass through the proscenium walls and both inside and/or outside of the vent or duct.

There shall be provided in an approved location at least one lavatory for each two (2) water closets for each sex, and at least one (1) drinking fountain for each floor level.

For other requirements on water closets, see UBC 1711.

For additional sanitation facilities requirements, see UBC 1711(h).

Section 802(c) of the UBC is amended to read as follows:

UBC 802(c) Special Provisions. Rooms in Division 1 and 2 Occupancies used for day care purposes, kindergarten pupils and Division 3 Occupancies shall not be located above the first story. Storage and janitor closets shall be of one-hour fire-resistive construction. Stage and enclosed platforms shall be constructed in accordance with Chapter 39. For attic partitions and draft stops see Section 3205.

Section 805 of the UBC is amended to read as follows:

UBC 805 Light, Ventilation and Sanitation. All portions of Group E Occupancies shall be provided with light and ventilation, either natural or artificial, as specified in UBC 605.

For other requirements on water closets, see UBC 1711.

For additional sanitation facilities requirements, see UBC 1711(h).

Section 809 of the UBC is amended to read as follows:

UBC 809 Approved fire alarms shall be provided for all Group E Division 1 and 2 Occupancies with an occupant load of more than 50 persons in Group E Division 3 Occupancies with an occupant load of more than 29 persons. In every Group E Occupancy provided with an automatic fire extinguishing or detection system, the operation of such system shall automatically activate the school alarm system.

The fire alarm system shall be installed in compliance with NFPA Standard 72-A-75, "Local Protective Signaling Systems."

An approved fire alarm is a fire alarm and detection system consisting of the following:

1. A complete non-coded continuously sounding until manually reset, electronically supervised type.

2. Shall have sounding stations on 100 foot to 150 foot spacing; (a) in corridors, (b) in areas of high noise levels, such as band rooms, shops, boiler rooms, (c) a weatherproof station on exterior of building facing residential areas.

3. Shall have automatic sending stations (detectors) in boiler rooms, kitchens, shops, painting areas, lounges, laundries, janitor's closets, storerooms, etc., or unsupervised and unoccupied spaces; namely, critical or hazardous areas.

4. Manual sending stations shall be provided in the natural path of escape from fire, near each exit from an area, on each floor, and shall be readily accessible, unobstructed and at visible locations.

Section 901 of the UBC is amended to read as follows:

UBC 901 Division 1. Nurseries for full time care of children under kindergarten age. Hospitals, sanitariums, nursing homes, and similar buildings (each accomodating five or more persons).

Division 2. Boarding care homes, detoxification centers, homes for children of kindergarten age or over, supervised living facilties. Class B as defined, for the mentally retarded, mentally ill, chemically dependent and the physically handicapped (each accomodating five or more persons).

Section 902(b) Special Provisons. Division 3 Occupancies shall be housed in buildings of Type I or II-F.R. construction.

Every story of a Group I, Division 1 Occupancy accommodating five (5) or more non-ambulatory persons, unless provided with a horizontal exit, shall be divided into not less than two compartments accommodating

approximately the same number of non-ambulatory persons in each compartment by smokestop partition meeting the requirements of a one-hour occupancy separation so as to provide an area of refuge within the building.

Corridor openings in the smokestop partition shall be protected with doors as required in Section 3304(h). Other openings shall be limited to ducts which have fire dampers in the plane of the wall activiated by detectors of products of combustion other than heat conforming to Section 4306(b)2.

Rooms occupied by inmates or patients whose personal liberties are restrained, shall have noncombustible floor surfaces.

Section 905 of the UBC is amended to read as follows:

UBC 905 All portions of Group I Occupancies shall be provided with natural light by means of exterior glazed openings with an area equal to one-tenth of the total floor area, and natural ventilation by means of exterior openings with an area not less than one-twentieth of the total floor area or shall be provided with artificial light and a mechnically operated ventilating system as specified in Section 605 and the mechanical code.

For other requirements on water closets, see UBC 1711.

For additional sanitation facilties requirements, see UBC 1711(h).

Section 909 of the UBC is amended to read as follows:

UBC 909 An approved fire alarm system shall be provided for all Group I Occupancies.

Audible alarm devices shall be used in all non-patient areas. Visible alarm devices may be used in lieu of audible devices in patient occupied areas. An approved alarm system shall comply with UBC 809. Operation of any

fire alarm activation device shall automatically, without delay, accomplish general alarm indication and control functions. Zoned, coded systems shall be permitted to be used. Exception: Alarm systems may be installed in accordance with NFPA 101, 1977 Edition, § 10-3.3.3.

Section 1005 of the UBC is amended to read as follows:

UBC 1005 All portions of Group H Occupancies shall be provided with natural light by means of exterior glazed openings with an area equal to one-tenth of the total floor area, and natural ventilation by means of exterior openings with an area not less than one-twentieth of the total floor area or shall be provided with artificial light and a mechanically operated ventilating system as specified in Section 605 and the applicable sections of the mechanical code.

In all buildings or portions thereof where flammable liquids are used, exhaust ventilation shall be provided sufficient to produce four complete air changes per hour. Such exhaust ventilation shall be taken from a point at or near the floor level.

In all buildings used for the repair or handling of automobiles operating under their own power, ventilation shall be provided capable of exhausting a minimum of 3/4 cfm per square foot. Additionally, each engine repair stall shall be equipped with an exhaust pipe extension duct, extending to the outside of the building, which, if over 10 feet in length, shall mechanically exhaust 300 cubic feet per minute. Connecting offices and waiting rooms shall be supplied with conditioned air under positive presure.

EXCEPTION: In public repair garages and aircraft hangars not exceeding an area of 5,000 square feet, the Building Official may authorize the omission of such ventilating equipment where, in his opinion, the building is supplied with unobstructed openings to the outer air which are sufficient to provide the necessary ventilation.

Every building or portion thereof where persons are employed shall be provided with at least one water closet. Separate facilities shall be provided for each sex when the number of employees exceeds four (4) and both sexes are employed. Such toilet facilties shall be located either in such building or conveniently in a building adjacent thereto on the same property.

All water closet rooms shall be provided with an exterior window at least 3 square feet in area, fully openable; or a vertical duct not less than 100 square inches in area for the first toilet facility with an additional 50 square inches in area for the first toilet facility; or a mechanically operated exhaust system which is connected to the light switch, capable of providing a complete change of air every 15 minutes. Such systems shall be vented to the outside air and at the point of discharge shall be at least 5 feet from any openable window.

For other requirements on water closets, see UBC 1711

For additional sanitation facilities requirements, see UBC 1711(h).

Section 1105 of the UBC is amended to read as follows:

UBC 1105 All portions of Group B, Divisions 1, 2 and 3 Occupancies shall be provided with natural light by means of exterior glazed openings with an area equal to one-tenth of the total floor area, and natural ventilation by means of exterior openings with an area not less than one-twentieth of the total floor area or shall be provided with artificial light and a mechanically operated ventilating system as specified in Section 605 and the applicable sections of the mechanical code.

In all buildings or portions thereof where flammable liquids are used, exhaust ventilation shall be provided, sufficient to produce four air changes per hour. Such exhaust ventilation shall be taken from a point at or near the floor level.

In all enclosed parking garages, used for storing or handling of automobiles operating under their own power and on all loading platforms in bus terminals, ventilation shall be provided capable of exhausting a minimum of 3/4 cfm per square foot of gross floor area. The Building Official may approve an alternate ventilation system designed to exhaust a minimum of 14,000 cfm for each operating vehicle. Such system shall be based upon the anticipated instantaneous movement rate of vehicles but not less than 2.5 percent (or one vehicle) of the garage capacity. Automatic CO sensing devices may be employed to modulate the ventilation system to maintain a maximum average concentration of CO of 50 ppm during any 8 hour period, with a maximum concentration not greater than 200 ppm for a period not exceeding one hour. Connecting offices, waiting rooms, ticket booths, etc., shall be supplied with conditioned air under positive pressure.

EXCEPTION: In gasoline service stations without lubrication pits, storage garages and aircraft hangars not exceeding an area of 5,000 square feet, the Building Official may authorize the omission of such ventilating equipment where, in his opinion, the building is supplied with unobstructed openings to the outer air which are sufficient to provide the necessary ventilation.

Every building or portion thereof where persons are employed shall be provided with at least one water closet. Separate facilties shall be provided for each sex when the number of employees exceeds four and both

sexes are employed. Such toilet facilities shall be located either in such building or conveniently in a building adjacent thereto on the same property.

Such water closet rooms in connection with food establishments where food is prepared, stored, or served, shall have a nonabsorbent interior finish on floors, walls and ceilings and shall have hand washing facilities therein or adjacent thereto.

All water closet rooms shall be provided with an exterior window at least three square feet in area, fully openable; or a vertical duct not less than 100 square inches in area for the first toilet facility with an additional 50 square inches for each additional toilet facility; or a mechanically operated exhaust system, which is connected to the light swtich, capable of providing a complete change of air every 15 minutes. Such systems shall be vented to the outside air and at the point of discharge shall be at least five feet from any openable window.

For other requirements on water closets, see UBC 510 and UBC 1711.

For additional sanitation facilties requirements, see UBC 1711(h).

Section 1109 of the UBC is amended by adding a new paragraph (m):

(m) Every parking ramp or other parking facility shall include spaces for the parking of motor vehicles having a capacity of seven (7) to sixteen (16) persons. Such vehicles shall be classified as commuter vehicles for the transportation of employees to and from their place of employment or to or from a transit stop authorized by a local transit authority. The number of required spaces shall be determined by 2% of the gross designed parking area with a minimum of two spaces.

Such spaces to accomodate commuter vehicles shall be at least 10 feet in width, 20 feet in length and a height clearance of 10'-6" on the entry level and shall not apply to other levels of a ramp.

Section 1205 of the UBC is amended to read as follows:

UBC 1205 Light, Ventilation, and Sanitation. All portions of Group B Division 4 Occupancies customarily used by human beings shall be provided with light and ventilation as specified in UBC 1105.

Every building or portion thereof where persons are employed shall be provided with at least one water closet. Separate facilities shall be provided for each sex when the number of employees exceeds four and both sexes are employed. Such toilet facilities shall be located either in such building or conveniently in a building adjacent thereto on the same property.

For other requirements on water closets, see UBC 1711

For additional sanitation facilities requirements, see UBC 1711(h).

Section 1301 of the UBC is amended to read as follows:

UBC 1301 Group R Division 1 Occupancies shall be: hotels and apartment houses, convents and monasteries (each accomodating more than ten persons). Supervised living facilities, Class A as defined, for the mentally retarded, mentally ill, chemically dependent, and the physically handicapped (each accommodating five or more persons).

Section 1304 of the UBC is amended to read as follows:

Exit Facilities

Sec. 1304. Stairs, exits, and smokeproof enclosures shall be as specified in Chapter 33.

All stairs and exits in Group R, Division 1 Occupancies shall open directly upon a street or alley or upon a yard or court not less than 4 feet in width directly connected to a street or alley by means of a passageway not less in width than the stairway opening into such passageway and not less than 7 feet in height.

Buildings more than one story in height shall have no transoms or ventilating openings from guest rooms to public corridors.

Door openings from guest rooms to public corridors shall be protected as specified in Section 3304.

Every sleeping room below the fourth story shall have at least one operable window or exterior door approved for emergency egress or rescue. The units shall be operable from the inside to provide a full clear opening without the use of separate tools.

All egress or rescue windows from sleeping rooms shall have a minimum net clear opening of 5.7 square feet. The minimum net clear opening height dimension shall be 24 inches. The minimum net clear opening width dimension shall be 20 inches. Where windows are provided as a means of egress or rescue they shall have a finished sill height not more than 48 inches above the floor.

Section 1305(b) of the UBC is amended to read as follows:

UBC 1305(b) Sanitation. Every building shall be provided with at least one water closet. Every hotel and each subdivision thereof where both sexes are accommodated shall be provided with at least two water closets located in such building, which shall be conspicuously marked one for each sex.

Additional water closet shall be provided on each floor for each sex at a rate of one for every additional ten guests, or fractional part thereof, in excess of ten.

Every dwelling unit shall be provided with a kitchen equipped with a kitchen sink and with bathroom facilities consisting of a water closet, lavatory and either a bathtub or shower. Each plumbing fixture shall be equipped with running water necessary for its normal operation.

For other requirements on water closets, see UBC 510 and UBC 1711.

For additional sanitation facilities requirements, see UBC 1711(h).

UBC 1314 Sound Transmission Control. Sound transmission control shall be provided to meet the standards defined in UBC Appendix Chapter 35.

Exception: Sound transmission requirements will not be required in Class A Supervised Living Facilities.

Chapter 13 of the UBC is amended by adding a new section to read as follows:

UBC 1315 Deadbolt Locks Required. All exit doors leading to public or shared areas from all dwelling units and hotel units shall be provided with deadbolt locks, at least one of which must be capable of being locked from the exterior of said unit. For the purpose of this section, a "deadbolt lock" is a locking bolt, which, when in the locked position, can only be moved positively by turning a knob, key, or sliding bolt.

Deadbolt locks having a bolt moved by turning a key shall be of the five-pin tumbler type or an approved equivalent. Lock throw shall be not less than three-quarters inch (3/4"). Locks shall meet requirements of UBC 3303(c).

Section 1401 of the Uniform Building Code is amended by adding a new section to read as follows:

Section 1401(b)

Group R, Division 4 Occupancies: This use group shall include all one and two family dwellings built exclusively by the standards as established in the 1975 One and Two

Family Dwelling Code as promulgated by the national model [redacted] organizations and 2MCAR 1.16001 through 2MCAR [redacted].16006.

Exception: The plumbing requirements found in Part V (Chapters 20 through 25) and the referenced portions of Part VII (2-26.2001 - S-26.2103) are deleted in their entirety. The plumbing requirements of the Minnesota Health Department for plumbing shall apply to this occupancy group.

Section R-211 of the One and Two Family Dwelling Code is amended to read as follows:

Section R-211 Exits. Not less than one exit conforming to this Chapter shall be provided from each dwelling unit.

Every sleeping room shall have at least one operable window or exterior door approved for emergency egress or rescue. The units must be operable from the inside to a full clear opening without the use of separate tools. Where windows are provided as a means of egress or rescue they shall have a sill height of not more than 48 inches above the floor.

All egress or rescue windows from sleeping rooms must have a minimum net clear opening of 5.7 square feet. The minimum net clear opening height dimension shall be 24 inches. The minimum net clear opening width dimension shall be 20 inches.

Section 1404 of the UBC is amended to read as follows:

Exit Facilities

Sec. 1404. Stairs and exits shall be provided as specified in Chapter 33.

Every sleeping room below the fourth story shall have at least one operable window or exterior door approved for emergency egress or rescue. The units shall be operable from the inside to provide a full clear opening without the use of separate tools.

All egress or rescue windows from sleeping rooms shall have a minimum net clear opening of 5.7 square feet. The minimum net clear opening height dimension shall be 20 inches. The minimum net clear opening width dimension shall be 20 inches. Where windows are provided as a means of egress or rescue they shall have a finished sill height not more than 48 inches above the floor.

Section 1405(b) of the UBC is amended to read as follows:

UBC 1405(b) Sanitation. Every dwelling unit shall be provided with a kitchen equipped with a kitchen sink and with bathroom facilities consisting of a water closet, lavatory and either a bathtub or shower. Plumbing fixtures shall be provided with running water necessary for their operation.

For other requirements on water closets, see UBC 510 and 1711.

For additional sanitation facilties requirements, see UBC 1711(h).

UBC 1711(b) of the UBC is amended to read as follows:

UBC 1711(b) Toilet Facilities. Each water closet stool shall be located in a clear space not less than 30 inches in width and have a clear space in front of the water closet stool of not less than 24 inches.

For provisions for the physically handicapped see SBC 5501 through 5508.

Chapter 17 of the UBC is amended by adding a new section to read as follows:

UBC 1711(h) Sanitation Facilities. Sanitation facilties shall be provided for each Occupancy in accordance with Table 17-B and UBC Sections 605, 705, 805, 905, 1005, 1205, 1305 and 1405. Fixtures shall be provided for each sex in accordance with the percentage of occupants of each sex. When the percentage of each sex is not known, one-half for each sex shall be assumed.

OCCUPANCY	USE	S.F. per Occ.	WATER CLOSETS	URINALS
Group A Occupancies	Auditoriums	30	Churches	Churches
	Bowling Alleys	30		
	Churches	60	1 for each 300 Men	(3)
	Conference Rooms	80	1 for each 300 Women	
	Dance Floors	30		
	Dining, Drinking	30		
	Exhibit Rooms	80	Other Occupants / Fixtures	
	Gymnasiums	30	1-100 / 1	
	Libraries	100	101-200 / 2	
	Lodge Rooms	80	201-400 / 3	
	Lounges	80	Over 400 / 1 addt'nl/each 500	
	Rinks	30		(3)
	Stadiums, Grandstands	80		
	Theaters	30		
	Waiting Rooms	80		
Group E Occupancies (6)	Elementary	85	Boys 1/ea. 100 / Girls 1/ea. 30	1 for each 30
	Secondary	130	Boys 1/ea. 100 / Girls 1/ea. 25	
Group I Occupancies	Prisons, Jails	100	1 for each cell 1 for ea. exercise room	
	Hospitals, Nursing Homes	100	1 for each 8 patients 1 in each waiting rm.	-
			Other 1 for each 25 men 1 for each 20 women	Other 1 for each 50
Group B Occupancies	Aircraft Hangers	500	Factories, Warehouses Occupants / Fixtures	Factories, Warehouses
	Factories	200	1-10 / 1	
	Municipal Buildings	80	11-25 / 2	(3)
	Office Buildings	200	36-50 / 3	
	Sales	200	51-75 / 4	
	Service Stations	500	76-100 / 5	
	Storage Garages	500	Over 100 / 1 addt'nl for 30	
	Warehouses	500		
			Sales, Office, etc. Occupants / Fixtures	Sales, Offices
Group B-4 Occupancies	Factories	200	1-15 / 1	(3)
	Sales	200	16-35 / 2	
	Warehouses	500	36-55 / 3	
			56-80 / 4	
			81-110 / 5	
			111-150 / 6	
Group R-1 Occupancies	Dwelling Units, Apt.	-	1	-
	Motel, Hotel Units	-	1 for each 10	
	Rooming Houses	200	1 for each 10	
	Dormitories	200	1 for each 10	
Group R-3 and R-4 Occupancies	1 and 2 Family	-	1	-
Group M Occupancies	-	-	-	-
TEMPORARY FACILITIES	-	-	1 for each 30	1 for each 30

Footnotes:

(1) Occupant load is computed using the equation: $\frac{A}{\text{S.F. per Occ.}}$ = Occupant Load

(2) Square feet per occupant is only for computing the occupant load to determine the plumbing fixtures required.

(3) Urinals may be furnished in place of water closets at the rate of one urinal for one water closet, but not to exceed one-third of the required water closets.

(4) 1 fixture for each 10 occupants.

(5) 1 fixture for each 15 occupants.

For waterclosets, and lavatories, these numbers are minimum & equal number for ea. sex is required.

LAVATORIES	DRINKING FOUNTAINS	BATHTUBS OR SHOWERS	KITCHEN SINKS	SERVICE SINKS
Churches 1 for each 300				
Other Occupants | Fixtures 1-200 | 1 201-400 | 2 401-750 | 3 Over 750 | 1 addt'nl for each 500	1 for each 300	-	-	1
1 for each 100 1 for each 100	1 for each 75	-	-	1 per floor
1 in each cell 1 ea excercise rm	1 for each 100	1 at each cell block floor	-	1 per floor
1 for ea.10 patients		1 for each 20		
Other 1 for each 10		Other 1 for each 10		
Factories, Warehouses Occupants | Fixtures for each 1-100 | 1-10 Over 100 | 1-15	Factories-Warehouses 1 for each 75	-	-	1 per floor
Sales, Offices Occupants | Fixtures 1-15 | 1 16-35 | 2 36-60 | 3 61-90 | 4 91-125 | 5 Over 125 | 1 to 45	Sales, Offices 1 for each 150			
1 1 for each 10 1 for each 10 1 for each 10	-	1 1 for each 10 1 for each 10 1 for each 10	1 -	1 laundry tray for each 10 dwelling units or guest rooms
1	-	1	1	-
-	—	-	-	-
-	1 for each 100	-	-	-

A-Area of building occupancy classification served
S.F. - per Occ. - from Column 3 of this table

Sec. 1807. (a) is amended to read as follows:

Special Provisions for Group B, Division 2 Office Buildings and Group R, Division 1 Occupancies.

Sec. 1807.(a) Scope. This Section shall apply to all Group B, Division 2 office buildings and Group R, Division 1 Occupancies each having floors used for human occupancy located more than 75 feet above the lowest level of Fire Department vehicle access. Such buildings shall be provided with either an approved automatic fire-extinguishing system in accordance with Section 1807(c), or safe areas of refuge (compartmentation) in accordance with Section 1807(1).

(b) Certificate of Occupancy. All mechanical and electrical equipment and other required life safety systems shall be approved and installed in accordance with approved plans and specifications pursuant to this Section and shall be tested and proved to be in proper working condition to the satisfaction of the building official before issuance of the Certificate of Occupancy.

(c) Automatic Fire-extinguishing System. When provided as required in Section 1807(a), the automatic fire-extinguishing system shall be provided throughout the building. The sprinkler system shall be designed using the parameters set forth in UBC Standard No. 38-1 and the following:

1. Shutoff valves and a water flow device shall be provided for each floor. The sprinkler riser may be combined with the standpipe riser.
2. In Seismic Zones No. 2, No. 3, and No. 4, in addition to the main water supply a secondary on-site supply of water equal to the hydraulically calculated sprinkler design demand plus 100 gallons per minute additional for the total standpipe system shall be provided. This supply shall be automatically available if the principal supply fails and shall have a duration of 30 minutes.

(d) Smoke Detection Systems. At least one approved smoke detector suitable for the intended use shall be installed in:

1. Every mechanical equipment, electrical, transformer, telephone equipment, elevator machine or similar room.

2. In the main return and exhaust air plenum of each air-conditioning system and located in a serviceable area downstream of the last duct inlet.

3. At each connection to a vertical duct or riser serving two or more stories from a return air duct or plenum of an air conditioning system. In Group R, Division 1 Occupancies, an approved smoke detector may be used in each return air riser carrying not more than 5000 cfm and serving not more than 10 air inlet openings.

The actuation of any detector required by this Section shall operate the voice alarm system and shall place into operation all equipment necessary to prevent the recirculation of smoke.

(e) Alarm and Communication Systems. The alarm and communication systems shall be so designed and installed that damage to any terminal unit or speaker will not affect the operation of the remainder.

The voice alarm and public address system may be a combined system. When approved, the Fire Department communications system may be combined with the voice alarm system and the public address system.

Three communication systems which may be combined as set forth above shall be provided as follows:

1. Voice alarm system. The operation of any smoke detector, sprinkler, water flow device or manual fire alarm station shall automatically sound an alert signal to the desired areas followed by voice instructions giving appropriate information and direction to the occupants.

The central control station shall contain controls for the voice alarm system so that a selective or general voice alarm may be manually initiated.

The system shall be supervised to cause the activation of an audible trouble signal in the central control station upon interruption or failure of the audiopath including amplifiers, speaker wiring, switches and electrical contracts and shall detect opens, shorts and grounds which might impair the function of the system.

The alarm shall be designed to be heard clearly by occupants within the building or designated portions thereof as is required for the public address system.

2. Public address system. A public address communication system designed to be clearly heard by all occupants of the building shall operate from the central control station. It shall be established on a selective or general basis to the following terminal areas:

A. Elevators

B. Elevator lobbies

C. Corridors

D. Exit stairways

E. Rooms and tenant spaces exceeding 1000 square feet in area.

F. Dwelling units in apartment houses

G. Hotel guest rooms or suites

3. Fire Department communication system. A two-way Fire Department communication system shall be provided for Fire Department use. It shall operate between the central control Station and every elevator, elevator lobby and entry to every enclosed exit stairway.

(f) Central Control Station. A central control station for Fire Department operations shall be provided in a location aproved by the Fire Department. It shall contain:

1. The voice alarm and public address system panels.

2. The Fire Department communications panel.

3. Fire detection and alarm system annunciator panels.

4. Status indicator and controls for elevators.

5. Status indicators and controls for air-handling systems.

6. Controls for unlocking all stairway doors simultaneously.

7. Sprinkler valve and water flow detector display panels.

8. Standby power controls and status indicators.

9. A telephone for Fire Department use with controlled access to the public telephone system.

(g) Smoke Control. Natural or mechanical ventilation for the removal of products of combustion shall be provided in every story and shall consist of one of the following:

1. Panels or windows in the exterior walls which can be opened remotely from an approved location other than the fire floor. Such venting facilities shall be provided at the rate of 20 square feet per 50 lineal feet of exterior wall in each story and shall be distributed around the perimeter at not more than 50-foot intervals. Such windows or panels and their controls shall be clearly identified.

EXCEPTION: When a complete automatic fire-extinguishing system is installed, windows or panels manually openable from within the fire floor or approved fixed tempered glass may be used in lieu of the remotely operated openable panels and windows. Such windows shall be clearly identified and shall be of the size and spacing called for in Section 1807(g)1.

2. When a complete and approved automatic fire-extinguishing system is installed, the mechanical air-handling equipment may be designed to accomplish smoke removal. Under fire conditions, the return and exhaust air shall be moved directly to the outside without recirculation to other sections of the building. The air-handling system shall provide a minimum of one exhaust air change each 10 minutes for the area involved.

3. Any other approved design which will produce equivalent results.

(h) Elevators. Elevators and elevator lobbies shall comply with the provisions of Chapter 51 and the following:

NOTE: A bank of elevators is a group of elevators or a single elevator controlled by a common operating system; that is, all those

elevators which respond to a single call button constitute a bank of elevators. There is no limit on the number of cars which may be in a bank or group but there may be not more than four cars within a common hoistway.

1. Except for the main entrance level, all elevators on all floors shall open into elevator lobbies which are separated from the remainder of the building as is required for corridor construction in Section 3304(g) and (h).

2. Each elevator lobby shall be provided with an approved smoke detector located on the lobby ceiling. When the detector is activated, elevator doors shall not open and all cars serving that lobby are to return to the main floor and be under manual control only. If the main floor detector or a transfer floor detector is activated, all cars serving the main floor or transfer floor shall return to a location approved by the Fire Department and building official and be under manual control only. The smoke detector is to operate before the optical density reaches 0.03 per foot. The detector may serve to close the lobby doors.

3. A permanent sign shall be installed in each elevator cab adjacent to the floor status indicator and at each elevator call station on each floor reading "IN FIRE EMERGENCY, DO NOT USE ELEVATOR -- USE EXIT STAIRS," or similar verbiage approved by the building official.

4. Elevator hoistways shall not be vented into an elevator machine room. Cable slots entering th machine room shall be sleeved beneath the machine room floor and extend to not less than 12 inches below the shaft vent to inhibit the passage of smoke into the machine room.

5. At least one elevator car serving all floors shall have a minimum inside car platform of 4 feet 3 inches deep by 6 feet 8 inches wide with a minimum clear opening width of 42 inches, unless otherwise designed and approved to provide equivalent utility to accomodate an ambulance stretcher having a minimum size of 22 inches by 78 inches in its horizontal position. This elevator shall be identified.

(i) Standby Power, Light and Emergency Systems. Standby power, light and emergency systems shall comply with the following:

1. Standby power. A permanently installed on-site power generation system conforming to U.B.C. Standard No. 18-1 shall be provided. All power, lighting, signal and communication facilities provided under the requirements of this Section, including an independent ventilating system for the standby power generator room, shall be transferable to the standby power source.

The electrical power requirements for sizing the standby power generation system shall include but not be limited to the following:

A. Fire protection equipment, including fire pumps.

B. Mechanical ventilation equipment required by this Section including power-operated windows.

C. Elevators designated for Fire Department use and as required by Chapter 51.

D. Standby lighting

E. The normal loads of all facilities classed as emergency. The regular light and power circuits supply ing such facilties are classified as standby systems and shall be automatically transferable to the standby power generation system.

2. Standby lighting. Standby lighting shall include but not be limited to the following:

A. Separate lighting circuits and facilties sufficient to provide light with an intensity not less than one footcandle measured at floor level in all exit corridors, stairways, smokeproof enclosures, elevators, elevator lobbies, and other areas which are clearly part of the escape route.

B. All circuits supplying lighting for the central control station, the standby power generator rooms, and other rooms housing control equipment for mechanical systems required by this Section shall be transferable to the standby power system.

3. Emergency systems. All electrical systems and facilties required by this Section and classified as emergency shall be installed in conformance with U.B.C. Standard 18-1. The following systems and lighting loads are classified as emergency facilties and shall operate within 10 seconds of primary power failure:

A. Exit sign and exit illumination as required by Section 3312.

B. Fire alarm and sprinkler alarm systems.

C. Fire detection systems

D. Elevator car lighting

E. Stairway door control systems

F. Voice communication systems

G. Electrical facilties classified as emergency by any other applicable code or ordinance.

(j) Exits. Exits shall comply with other requirements of this Code and the following:

1. All stairway doors which are to be locked from the stairway side shall have the capability of being unlocked simultaneously without unlatching upon a signal from the central control station.

2. A telephone or other two-way communications systems connected to an approved emergency service which operates continuously shall be provided at not less than every fifth floor in each required stairway where other provisions of this Code permit the doors to be locked.

3. Smokeproof enclosures may be eliminated if all enclosed stairways are pressurized, as provided for mechanically operated smokeproof enclosures, to a minimum of 0.15 and a maximum of 0.50 inch of water column in fully sprinklered buildings.

(k) Seismic Considerations. In Seismic Zones No. 2, No.3 and No. 4, the annchorage of the following mechanical and electrical equipment shall be designed in

accordance with Section 12.

(l) Areas of Refuge (Compartmentation) Alternate. Areas of refuge conforming to the following may be provided as an alternate to the automatic fire-extinguishing system:

1. Every story shall be divided into two or more areas of approximately the same size with no single area exceeding 15,000 square feet. The wall and door shall be constructed as required for a horizontal exit in Section 3307.

2. Each area of refuge (compartmentation) shall contain one elevator to the main floor and a minimum of one enclosed exit stairway.

3. Openings in exterior walls, where such openings are within 5 feet of each other horizontally on vertically adjacent floors shall be protected by approved flame barriers either extending 30 inches beyond the exterior wall in the plane of the floor or by approved vertical panels not less than 3 feet in height above the floor.

4. Horizontal exit walls used for compartmenting a building shall have a fire-resistance rating of not less than two hours. Duct penetrations of this wall shall not be permitted. Ferrous or copper piping and conduit may penetrate or pass through the wall only if the openings are caulked with impervious noncombustible materials sufficiently tight to prevent the transfer of smoke or combustion gases from one side of the wall to the other and are so maintained. The fire door serving as the horizontal exit between compartments shall be so installed, fitted and gasketed that it will provide a substantial barrier to the passage of smoke.

5. The fire-resistive floor or the floor-ceiling construction shall extend to and be tight against the exterior wall so that the fire-resistive integrity between stories is maintained. No penetrations or other installations which will impair the fire-resistive integrity of the floor or floor-ceiling assembly shall be permitted.

6. A manual fire alarm system (pull boxes) shall be provided.

(m) Automatic Fire-Extinguishing System Alternatives. When a complete approved

automatic fire-extinguishing system complying with this Section is installed in a building, the following modifications of Code requirements are permitted:

1. The fire-resistive time periods set forth in Table No. 17-A may be reduced by one hour for interior bearing walls, exterior bearing and nonbearing walls, roofs and the beams supporting roofs, provided they do not frame into columns. Vertical shafts other than stairway enclosures and elevator shafts may be reduced to one hour when sprinklers are installed within the shafts at alternate floors.

2. Except for corridors in Group B, Division 2 and Group R, Division 1 Occupancies and partitions separating dwelling units or guest rooms, all interior nonbearing partitions required to be one-hour fire-resistive construction by Table No. 17-A may be of noncombustible construction without a fire-resistive time period.

3. Fixed tempered glass may be used in lieu of openable panels for smoke control purposes.

4. Travel distance from the most remote point in the floor area to a horizontal exit or to an enclosed stairway may be 300 feet.

5. The manually operated fire alarm system required in the compartmented building is not required.

6. Smokeproof enclosures are not required but all required stairways shall be pressurized to a minimum of 0.15 inch of water column.

7. Spandrel walls, eyebrows and compartmentation are not required; however, the fire resistance of the floors and juncture of exterior walls with each floor must be maintained.

8. Fire dampers, other than those needed to protect floor-ceiling assemblies to maintain the fire resistance of the assembly, are not required except for those which may be necessary to by-pass smoke to the outside, those provided to convert from recirculated air to 100 percent outside air, and those which may be required to protect the fresh air supply intake against smoke which may be outside the building.

9. Emergency windows required by Section 1304 are not required.

Section 1907 of the UBC is amended to read as follow:

Sec. 1907. Type II-F.R. buildings shall comply with the special provisions on high rise buildings in Section 1807.

EXCEPTION: The reduction provisions for roofs see Sec. 1807(m) Item 1.

Section 2305(d) of the UBC is amended to read as follows:

UBC 2305(d) Snow Loads. Snow loads full or unbalanced shall be considered where such such loading will result in larger members of connections. A basic snow load of 40 pounds per square foot of horizontal projection is required in the following counties: Anoka, Carlton, Carver, Chisago, Cook, Dakota, Hennepin, Isanti, Lake, Pine, Ramsey, St. Louis, Scott and Washington. A basic snow load of 30 pounds per square foot of horizontal projection is required for all other counties not mentioned above. Potential accumulation of snow at valleys, parapets, roof structures, and offsets in roofs of uneven configuration shall be considered. Where snow loads occur, the snow loads shall be determined by the Building Official in accordance with Appendix "B".

EXCEPTIONS:

1. The requirements of Appendix "B" shall not apply to Group R Division 3, Group R Division 4 and M Occupancies.
2. A basic snow load of 30 pounds per square foot of horizontal projection shall be acceptable for detached Group M, Division 1 Occupancies in all counties.

Snow loads in excess of 20 pounds per square foot may be reduced for each degree of pitch over 20 degrees by R as determined by the following formula:

$$R_S = \frac{S}{40} - \frac{1}{2}$$

Where:

R_S = Snow load reduction in pounds per square foot per degree of pitch over 20 degrees.

S = Total snow load in pounds per square foot.

Section 2312(a) of the UBC is amended to read as follows:

UBC 2312(a) General. For the purpose of the Code this State shall be considered to be in Zone "0", No Damage Area. Every building or structure and every portion thereof shall be designed and constructed to resist stresses produced by lateral forces as provided in this Section. Stresses shall be calculated as the effect of a force applied horizontally at each floor or roof level above the foundation. The

force shall be assumed to come from any horizontal direction.

Structural concepts other than set forth in this section may be approved by the Building Official when evidence is submitted showing that equivalent ductility and energy absorption are provided.

Where prescribed wind loads produce higher stresses, such loads shall be used in lieu of the of the loads resulting from earthquake forces.

Section 2907(a) of the UBC is amended to read as follows:

UBC 2907(a) General. Footings and foundations, unless otherwise specifically provided, shall be constructed of masonry or concrete and in all cases extend below the frost line. Footings shall be constructed of solid masonry or concrete. Foundations supporting wood shall extend at least six inches above the adjacent finish grade. Footings shall have a minimum depth below finished grade as indicated in Table 29-A unless another depth is recommended by a foundation investigation.

1. In the absence of a determination by an engineer competent in soil mechanics, the minimum allowable footing depth in feet due to freezing shall be five feet in Zone I and three and one-half feet in Zone II.

Zone I - Shall include the counties of: Aitkin, Becker, Beltrami, Carlton, Cass, Clay, Clearwater, Cook, Crow Wing, Douglas, Grant, Hubbard, Itassca, Kanabec, Kittson, Koochiching, Lake, Lake of the Woods, Mahnomen, Marshall, Mille Lacs, Morrison, Norman, Otter Tail, Pennington, Pine, Polk, Red Lake, Roseau, St. Louis, Todd, Traverse, Wadena, Wilkin.

Zone II - Shall include the counties of: Anoka, Benton, Big Stone,

Blue Earth, Brown, Carver, Chippewa, Chisago, Cottonwood, Dakota, Dodge, Faribault, Fillmore, Freeborn, Goodhue, Hennepin, Houston, Isanti, Jackson, Kandiyohi, Lac Qui Parle, Le Sueur, Lincoln, Lyon, McLeod, Martin, Meeker Mower, Murray, Nicollet, Nobles, Olmsted, Pipestone, Pope, Ramsey, Redwood Renville, Rice, Rock, Scott, Sibley, Sherburne, Stearns, Steele, Stevens, Swift, Wabasha, Waseca, Washington, Watonwan, Winona, Wright, Yellow Medicine. Lesser depths may be permitted when supporting evidence is presented by an engineer competent in soil mechanics.

2. Soil Under Slab on Grade Contruction for Buildings. When soil, natural or fill, is sand or pit run sand and gravel, and of depth in accordance with minimum footings depth requirements for each zone, slab on grade construction which supports roof and wall loads shall be permitted. Slab on grade construction for detached buildings Group M, Division 1 Occupancies may be placed on any soil except peat or muck.

UBC 3203(d)3 is amended to read as follows:

UBC 3203(d) 3. Shingle; shake and tile roofs. A. General. Installation shall be in accordance with Table No. 32-B. Underlayment, when required, shall be lapped horizontally and vertically so as to shed water.

In areas subject to roof ice build-up, underlayment consisting of two layers of Type 15 felt applied shingle fashion shall be installed and solid mopped together with approved cementing material between the plies extending from the eave up the roof to a point 24 inches inside the exterior wall line of the building.

The entire State of Minnesota shall be deemed an area subject to roof ice build-up.

Exception: For wood shingle or wood shake roofs the underlayment shall extend 36 inches inside the exterior wall line of the building.

UBC 3205(c) is amended to read as follows:

UBC 3205(c) Ventilation. Where determined necessary by the Building Official due to atmospheric or climatic conditions, enclosed attics and enclosed rafter spaces formed where ceilings are applied direct to the underside of roof rafters, shall have cross ventilation for each separate space by ventilating openings protected against the entrance of rain and snow. The net free ventilating area shall be not less than 1/150 of the area of the space ventilated, except that the area may be 1/300 provided at least 50 percent of the required ventilating area is provided by ventilators located in the upper portion of the space to be ventilated at least 3 feet above eave or cornice vents with the balance of the required ventilation provided by eave or cornice vents.

Amend UBC Section 3207(c) as follows:

Where roof drains are required, overflow drains having the same size as the roof drains shall be installed with the inlet flow line located 2 inches above the low point of the roof, or overflow scuppers having three times the size of the roof drains may be installed in adjacent parapet walls with the inlet flow line located 2 inches above the low point of the adjacent roof and having a minimum opening height of 4 inches. Overflow drains shall be connected to drain lines independent from the roof drains, and shall discharge above grade.

UBC 3303(a) second paragraph is amended to read as follows:

Buildings as structures used for human occupancy and each dwelling unit or guest room leased for gain shall have at least one door which meets the requirements of subsection (d).

Section 3304(h) of the UBC is amended to read as follows:

UBC 3304(h) Openings. Where corridor walls are required to be of one-hour fire resistive construction by subsection (g) above, every door opening shall be protected by a tight-fitting smoke and draft control door assembly having a fire-protection rating of not less than 20 minutes when tested in accordance with UBC Standard No. 43-2 without the hose stream test. The door and frame shall bear an approved label or other identification showing the rating thereof, the name of the manufacurer, and the identification of the service conducting the inspection of materials and workmanship at the factory during fabrication and assembly. Doors shall be maintained self-closing or shall be automatic closing in accordance with Section 4306(b)2. Other interior openings shall be fixed and protected by approved 1/4 inch thick wired glass installed in steel frames. The total area of all openings, other than doors, in any portion of an interior corridor shall not exceed 25 percent of the area of the corridor wall of the room which it is separating from the corridor. For duct openings, see UBC 4306.

EXCEPTIONS:

1. Protection of openings in the interior walls of exterior exit balconies is not required.

2. In Type I and II-F.R. buildings housing Group B-2 Occupancies, corridor walls may be of approved wired glass set in metal frames. The glass height shall not exceed 2/3 of the width of the corridor. A draft curtain of at least one hour fire-resistive construction and not less than 24 inches in height shall be provided to protect the corridor from the Group B-2 Occupancy area (tenant space). The draft curtain shall be located above the glass and extend a minimum of 24 inches below any finished ceiling in the tenant space. If the finished ceiling is not a fire-rated assembly, the draft curtain shall extend from the wire glass to a rated ceiling or floor assembly. When the B-2 Occupancy area (tenant space) is protected by an approved automatic fire-extinguishing system for a distance of twelve (12) feet in depth adjoining the corridor, and the corridor is not less than twelve (12) feet in width, glass other than wired glass may be approved. Open grille type gates and similar enclosing or security devices may be used in corridor walls of corridors not less than twelve feet in width, when the entire story is protected by an approved fire-extinguishing system.

In buildings of other than Type I or Type II-F.R. construction, this exception shall not be allowed, unless the entire building is provided with an approved automatic fire-extinguishing system.

3. In Group I Occupancies in which an approved complete standard automatic fire extinguishing system is installed, corridor doors serving sleeping rooms need not be maintained self-closing or be automatic closing. In buildings of type I, II fire-resistive, and II one-hour construction, the automatic fire-extinguishing system may be omitted from operating, delivery, cardiac, x-ray, and intensive care rooms when each such room is provided with smoke detectors connected to a continuously attended station or location within the building.

Table 33A is amended to read as follows:

Delete the right hand column entitled "Egress by means of a ramp or an elevator must be provided for the physically handicapped as indicated. "

Also delete footnotes 2, 3, 4, 5 and 6.

Section 3318(c) of the UBC is amended to read as follows:

UBC 3318(c) Corridors. The minimum clear width of a corridor shall be 44 inches, except that corridors serving any area housing one or more non-ambulatory persons shall be not less than eight feet in width. There shall be no change of elevation in a corridor serving non-ambulatory persons unless ramps are used.

In Group I, Division 1 Occupancies such as jails, prisons, reformatories and similar buildings with open barred cells forming corridor walls, the corridors and cell doors need not be fire ressitive.

In Group I, Division 1 Occupancies such as jails, prisons, reformatories and similar buildings, doors to corridors used by the inmates need not be maintained self-closing or be automatic closing, may project into the required width of the corridor, but when fully opened shall not reduce the required width by more than seven inches.

Section 3801(c) of the UBC is amended by adding a new definition after the definition of Fire Department Hose Connection and before the definition of Wet Standpipe:

FIRE DEPARTMENT STANDPIPE is a fire line system with a constant water supply and pressure and equipped with Fire Department inlet and outlet connections and installed exclusively for the use of the Fire Department.

Section 3802(b)5 of the UBC is amended to read as follows:

3802(b) In all Group I Occupancies except jails, prisons and reformatories however, the respective increases for area and height specified in UBC 506(c) and UBC 507 shall be permitted.

EXCEPTIONS:

1. In hospitals of Types I and II F.R. construction, the automatic fire extinguishing system may be omitted from operating rooms, X-ray rooms, delivery rooms, cardiac and intensive care rooms and patient sleeping rooms not exceeding 600 square feet in area when each such room is provided with detectors of products of combustion other than heat, complying with UBC Standard No. 43-6.

2. In hospitals of Type II-1 hour construction, the automatic fire extinguishing system may be omitted from operating rooms, X-ray rooms, delivery rooms, cardiac and intensive care rooms when each such room is provided with detectors of products of combustion other than heat, complying with UBC Standard No. 43-6.

Add new Section 3802(d) of the UBC to read as follows:

3802(d) Special Automatic Fire-Extinguishing Systems. In all Occupancies having commercial cooking equipment (see NFPA no. 96A, 1975), automatic fire extinguishing systems complying with UBC Standard 38-1 or 38-2 shall be installed for protection of duct systems, grease removal devices, hoods and over commerical cooking equipment which may be a source of ignition (such as fat fryers, ranges, griddles and boilers). Systems installed in accordance with the following standards are also permitted.

1. Standards for foam-water sprinkler systems and foam-spray systems, NFPA No. 16-1974.

2. Standard for dry-chemical extinguishing system, NFPA No. 17-1975.

EXCEPTION: These requirements shall not apply to Group R-3 and Group R-4 Occupancies.

Section 3803(a) of the UBC is amended to read as follows:

3803(a) General. Fire Department Standpipes shall comply with the requirements of this section and NFPA 14-1976 for Class I standpipes.

UBC 3803(b) Where Required. All buildings three or more stories in height, shall be equipped with one or more Fire Department Standpipes.

Exception: In buildings that are fully protected with an approved automatic fire extinguishing system the standpipes may be incorporated with the risers for such system.

UBC 3802(c) Location. There shall be one Fire Department Standpipe outlet connection located at every floor level landing above the first floor of every required enclosed stairway or smokeproof enclosure. Outlets at enclosed stairways shall be located within the enclosure. No point within a building requiring Fire Department Standpipes shall be more than 130 feet travel distance from a Fire Department Standpipe outlet connection.

Portions of Fire Department Standpipe systems not located within an enclosed stairway or smokeproof enclosure shall be protected by a degree of fire resistance equal to that required for vertical enclosures in the building in which they are located.

UBC 3803(d) Detailed Requirements.

1. Construction. Fittings and connections shall be of sufficient strength to withstand 300 pounds per square inch of water pressure when ready for service. All Fire Department Standpipes shall be tested hydrostatically to withstand not less than 200 pounds per square inch of pressure for two hours, but in no case shall the

pressure be less than [redacted] pounds per square inch above [redacted] maximum working pressure.

2. Size. The size of the standpipe shall conform to Chapter 2 of NFPA No. 14-1976 Edition.

> Exception: The size of the standpipe may be reduced to 2 1/2" in a building not exceeding 75' to the topmost outlet of the standpipe riser and the building is fully protected with an approved automatic fire extinguishing system. Such reduction in standpipe size shall be based on the requirements of a hydraulically calculated system as outlined in Chapter 7 of NFPA 13-1976.

3. Fire Department connections. All Fire Department Standpipes shall be equipped with a two-way siamese fire department connection. Fire Department connections shall be interconnected in the system and shall be located on a street front, not less than 18 inches nor more than 4 feet above grade and shall be equipped with an approved straightway check valve and substantial plugs or caps. All Fire Department connections shall be protected against mechanical injury and shall be visible and accessible. More than one fire department connection may be required.

4. Outlets. Each standpipe shall be equipped with an approved 2-1/2 inch outlet not less than 2 feet nor more than 4 feet above the floor level of each story. All Fire Department Standpipes shall be equipped with a two-way, 2-1/2 inch outlet above the roof line of the building when the roof has a pitch of less than 4 inches in 12 inches and installed in a stairway or heated location. All outlets shall be installed so that a 12 inch long wrench may be used in connecting the hose with clearance for the wrench on all sides of the outlet. Standpipes located in smokeproof enclosures shall have outlets located in the vestibule or on the balcony. Standpipe outlets in stairway enclosures or smoke towers shall be so located that the exit doors do not interfere with the use of the outlet. All outlets shall be equipped with an approved valve, cap and chains.

5. Water Supply. The standpipe system shall deliver a water supply as required by Chapter 5, Water Supplies, NFPA No. 14-1976.

Section 3803 has been amended to add a new subsection as follows:

Section 3803(e) Dry Standpipes, when approved by the Fire Chief, may be installed in lieu of Fire Department Standpipes and shall conform to Section 3803 unamended of the UBC 1976 Edition.

Section 3804(b) of the UBC is amended to read as follows:

3804(b) Where Required. Wet standpipes extending from the cellar or basement into the topmost story shall be provided in Group A Division 1, 2 and 2.1 Occupancies with an occupant load exceeding 1,000; in Groups I, H, B and B-4 Occupancies three or more stories in height; and in Groups H and B Occupancies having a floor area exceeding 20,000 square feet per floor.

EXCEPTIONS:

1. Wet standpipes are not required in buildings equipped throughout with an automatic fire-extinguishing system.

2. Wet standpipes are not required in basements or cellars equipped with a complete automatic fire-extinguishing system.

3. Wet standpipes shall not be required in assembly areas used solely for worship.

Section 4701(a) of the UBC is amended to read as follows:

UBC 4701(a) General. The installation of lath, plaster and gypsum wallboard shall be done in a manner and with materials as specified in this Chapter, or as set forth in ASNI A42.2, 1971 Specifications for Portland Cement and Portland Cement-Lime Plastering, Exterior (Stucco) and Interior and ANSI A42.3, 1971 Specifications for Lathing and Furring for Portland Cement and Portland Cement-

Lime Plastering Exterior (Stucco) and Interior, and when required for fire-resistive construction, also shall comply with the provisions of Chapter 43.

Other approved wall or ceiling coverings may be installed in accordance with the recommendations of the manufacturer and the conditions of approval.

Sections 5001 through 5006 of the UBC are amended to read as follows:

Sections 5001 through 5006 of the UBC are deleted and replaced by SBC 301 through 337.

Sections 5101 through 5104 of the UBC are amended to read as follows:

Section 5101, 5102, 5103 and 5104 of the UBC, Elevators, Dumbwaiters, Escalators, Manlifts, Moving Walks, Hoists and Lifts are deleted. Refer to SBC 8801.

UBC Chapter 60

Section 6001 is deleted in its entirety.

Section 6002 of the UBC is amended to read as follows:

Section 6002. Uniform Building Code Standards. The UBC Standards which are referred to in various parts of this Code shall be the Uniform Building Code Standards, 1976 Edition, and are hereby declared to be a part of this Code.

SBC 112 Validity Clause

The SBC is amended by adding a new Chapter as follows:

SBC 112 Validity Clause. If any section, subsection, sentence, clause, or phrase of this Code, is for any reason, held to be unconstitutional, such decision shall not affect the validity of the remaining portions of this Code.

It is hereby declared that this Code and each section, subsection, clause or phrase thereof,

irrespective of the fact that any one or more sections, subsections, sentences, clauses and phrases be declared unconstitutional.

The SBC is amended by adding a new chapter as follows:

SBC CHAPTER 55

FACILITIES FOR THE HANDICAPPED

SBC 5501 Where Required.

(a) General. In addition to other provisions in this Code, facilities for the handicapped shall be provided in accordance with this chapter.

See UBC Chapter 17 for additional requirements

(b) Scope. Provisions of this chapter shall apply to all buildings except the following:

1. Group R-3, Group R Division 4 and M Occupancies.

2. Temporary buildings.

3. Buildings not exceeding 150 square feet in floor area need not be provided with sanitation facilities for the handicapped specified in SBC 5503.

4. One story buildings, other than service stations, not exceeding 2,000 square feet in floor area need not be provided with sanitation facilties for the handicapped specified in SBC 5503 when approved by the Building Official.

5. Floors of buildings not used by the general public and on which handicapped persons cannot be employed because of the nature of the work.

6. Group R-1 Occupancies in which dwelling units are individually owned, sanitation facilities for the handicapped specified in SBC 5503 and other facilties for the handicapped specified in SBC 5504, need not be provided.

SBC 5502 Building Accessibility

(a) Definitions.

1. Ramp is a sloped walking surface within a building or attached to a building connecting levels of the building and may be part of an exit in accordance with SBC 3306.

2. Walk is a continuous, permanently defined pathway at grade between public ways and buildings, parking areas and buildings, or between buildings.

3. Slip-resistant is any surfacing of a floor, ramp, or walk which has an anti-slip coefficient of not less than 0.40 as defined in Research Paper No. RP-1879 of the National Bureau of Standards.

(b) Site Approaches. Access to building entrances shall be by walks. Such walks shall be of concrete, asphaltic paving or similar permanent materials with slip-resistant surface, and shall be not less than 48 inches wide with a slope not to exceed one vertical to 20 horizontal.

(c) Building Entrances. At least one required exit of the building shall be accessible for use as ingress for the handicapped, and shall be identified for such use. Such building entrance shall be at the main

lobby or corridor, or shall be accessible thereto by ramp or elevator.

(d) Access to Other Stories. Access for the handicapped to other stories or levels of the building used by the general public and/or employees shall be by elevator or ramp, except the following:

1. Group R-1 Occupancies not exceeding three stories in height.

2. Other occupancies not exceeding two stories in height, and where the total occupant load is less than 100 on all floors other than the main floor.

Such ramp shall have a slip-resistant surface. It shall have a slope not to exceed one foot vertical to 12 feet horizontal and a landing at top and bottom, and where the rise exceeds three feet vertically, it shall have an intermediate landing located not to exceed two feet six inches vertically. Bottom landing shall have a minimum dimension of six feet measured in the direction of the ramp, and top and intermediate landings shall have a minimum dimension of five feet measured in the direction of the ramp. Handrails and guardrails shall be provided as required for stairs.

(e) Automobile Parking Areas. Where automobile parking spaces are provided at least one space per 50 spaces or fraction thereof, shall be provided for the use of the handicapped, and shall be identified for such use. Such parking spaces shall be not less than 12 feet in width, and located as near as practicable to the building entrance specified in SBC 5502(c).

(f) Doors and Doorways. Doors and doorways serving buildings or portions

thereof regulated by this chapter shall comply with the following:

1. Doorways or doors in an open position shall have a clear opening width of not less than 31 inches.

2. Doors shall be operable by a single effort with one hand.

3. In doorways consisting of two door leafs, at least one door leaf shall comply with the provisions of this section. See UBC 3303(d) for minimum exit door width.

4. Where access regulated by this chapter is through two or more sets of doors, as in a foyer, vestibule, or lobby, the space separating the doorways shall be not less than seven feet.

5. The floor or landing at doorways shall be level with, or not more than one-half inch lower than the threshold. Where the door swings over floor or landing such floor or landing shall extend not less than one foot beyond the door on the latch side.

6. In dwelling units specified in SBC 5503(a)1, entrances specified in SBC 5502(c), and toilet rooms or compartments specified in SBC 5503(c)1, door opening latch hardware shall have lever handles, and shall be not more than three feet six inches above the floor.

7. Doors serving toilet rooms or stalls shall be capable of being unlocked from either side.

(g) Stair Tread Nosing. Riser shall be slanted to meet the tread nosing edge, or where the tread extends beyond vertical risers, nosing shall be rounded and not project beyond the riser more than one inch.

(h) Aisles and Lanes. Where pedestrian aisles or lanes are defined with directional barriers, rails, benches, merchandise, tables, seats or fences, at least one shall have not less than 31 inches clear width for use of the handicapped and shall be identified for such use.

SBC 5503 Sanitation Facilties. Sanitation facilities may include toilets (water closets), urinals, lavatories, bathtubs, showers, sinks, and similar plumbing fixtures. For number and type of sanitation fixtures required in each occupancy, see Table 17-B.

(a) Where Required.

1. In Group R-1 Occupancies having eight or more dwelling units or guest rooms, sanitation facilties shall be provided in accordance with Table 55-A. In a multiple-building development, the dwelling units or guest rooms containing sanitation facilties shall not be located solely in one building.

2. In other buildings regulated by this chapter, at least one required toilet room for each sex shall have not less than one toilet and lavatory complying with this section, and where urinals are provided, not less than one urinal complying with this section. In buildings having more than one toilet room for each sex, not less than two required toilet rooms for each sex shall comply with this section. Toilet rooms having plumbing fixtures required by this section shall be identified for use by the handicapped. Buildings having a posted room directory shall list the location of such toilet rooms in the directory.

(b) Location Other than Group R-1 Apartment Occupancies.

In buildings with an elevator or ramp, the sanitation facilties may be located at any level served by elevator or ramp. Where sanitation facilities are required in buildings without an elevator ramp, the sanitation facilities shall be conveniently located at the required entrance level, accessible without leaving or re-entering the building.

(c) Sizes and Clearances.

1. Toilets. Toilet rooms or compartments shall have not less than 36 inches clear space at the front of the toilet and not less than 36 inches clear width between walls, free of door swing and other obstructions. Toilet seats shall be not less than 17 inches nor more than 20 inches above the floor. Grab bars shall be provided at both sides or one side and rear of the toilet. Such grab bars shall be securely fastened to support a load of not less than 250 pounds. They shall have an outside diameter of one and one half inches and shall have one and one half inches clearance from walls and partitions.

A. A horizontal grab bar shall be mounted so that the lowest point is ten inches above the toilet seat, and extends not less than six inches in front of the toilet bowl. Grab bar shall be not less than 12 inches long.

B. A vertical grab bar shall be mounted 12 inches from the front of the toilet bowl extending from 12 inches above the height of the toilet seat to 30 inches above the toilet seat.

2. Urinals. When provided, urinals shall have a clear access width of not less than 31 inches. The front lip of the bowl of wall mounted urinals shall be not more than 18 inches above the floor.

3. Lavatories. Lavatories shall have a clear access width of not less than 31 inches, clear height of not less than 29 inches to the bottom of the fixture apron, clear height of not more than 34 inches to the rim of the fixture, and a clear depth of not less than 12 inches under the fixture exclusive of bowl and waste pipe. The water control valves shall have lever handles.

4. Bathtubs. When provided, and shower is not furnished, the bathtub shall be equipped with a flexible hose hand shower not less than six feet in length, and a vertical height adjustment bar for the shower head of not less than four feet in length. The bathtub shall have a seat, either folding, retractable or fixed, not less than 17 inches nor more than 20 inches above the tub floor and not less than 15 inches deep, and of water-resistive material. Grab bars shall be provided at one side of the bathtub. Such grab bars shall be securely fastened to support a load of not less than 250 pounds. They shall have an outside diameter of one and one half inches and shall have one and one half inches clearance from walls and partitions.

   A. A horizontal grab bar shall be mounted not less than four inches nor more than six inches above the rim of the bathtub. Grab bar shall be not less than 36 inches long.

   B. A vertical grab bar shall be mounted 30 inches from the end

of the tub extending from a height of nine inches to a height of three feet six inches above the rim of the tub.

Water valves shall be single lever control, and shall be accessible from the seat.

5. Showers. When provided, the shower stall shall be accessible for the handicapped with a lip or curb at entry no higher than one half inch above floor of room or stall. The shower stall shall have a seat, either folding, retractable or fixed, not less than 17 inches nor more than 20 inches above the shower floor, and not less than 15 inches deep, and of water-resistive material. Grab bars shall be provided at two sides of the shower compartment. Such grab bars shall be securely fastened to support a load of not less than 250 pounds. They shall have an outside diameter of one and one half inches an shall have one and one half inches clearance from walls and partitions.

   A. A vertical grab bar shall be mounted on the wall opposite the seat extending from a height of three feet to a height of five feet above the floor of the shower.

   B. A horizontal grab bar shall be mounted on the wall adjacent to the seat ten inches above the seat. Grab bar shall be not less than 18 inches long.

   Water valves shall be single lever control and shall be accessible from seat.

6. Kitchen Sinks. When provided, kitchen sinks shall have a clear access width of not less than 31 inches, clear height of not less than 29 inches to the bottom of the fixture apron, clear height of not more than 34 inches to the rim of the fixture, and clear depth of not les sthan 12 inches under the fixture exclusive of bowl and waste pipe. The water control valves shall have lever handles.

SBC 5504 Other Facilities.

(a) Kitchen Facilties. In dwelling units in which sanitation facilties for the handicapped are required, kitchen facilties shall be provided as follows:

1. Space. Clear space of not less than five feet measured between walls, cabinets, appliances, or other obstructions shall be provided. Where cabinets have a base toe space of not less than deep and eight and three fourths inches high, the clear space may be measured from such toe space.

2. Range Controls. Range control handles shall be located at the front or side of the range.

3. Work Space. Work space shall have a clear access width of not less than 31 inches, clear height of not less than 29 inches to the bottom, clear height of not more than 34 inches to the top, and clear depth of not less than 12 inches under the work space. The work space shall have not less than four square feet of area with a minimum dimension of 24 inches. It may be fixed, folding or retractable.

(b) Toilet Room Accessories.

1. Mirror and/or Shelves. Where mirrors and/or shelves are provided, at least one shall be mounted so that the bottom is no higher than 40 inches above the floor.

2. Towel racks, Dispensers, Disposal Units. Where wall-mounted towel racks, dispensers, waste disposal containers or similar appliances are provided, at least one of each shall be mounted so that working height is no higher than 40 inches above the floor, and shall be free of interference by grab bars or other appliances or fixtures.

SBC 5505 Viewing Positions in Assembly Occupancies.

(a) Accessibility. Viewing positions required in this section shall be accessible for the handicapped by walk, ramp, or elvator, or combination thereof, through principle entrance.

(b) Number. Performance viewing positions in assembly occupancies with fixed seating shall be provided in accordance with Table 55-B.

(c) Space Requirements. One of the following shall be provided:

1. Clear spaces free of fixed or portable seats, or with removable fixed seats.

2. Spaces with readily removable portable seats.

(d) Location. Viewing positions shall be located at the main floor.

(e) Floor Surface. Viewing positions shall have level floor surfaces.

SBC 5506 Controls and Electrical Switches.

(a) Height. The top of controls for elevator controls, thermostats, manual fire alarms, and similar equipment in all buildings regulated by this chapter and electrical switches and receptacles in dwelling units regulated by this chapter shall be no higher than five feet above the floor.

SBC 5507 Tactile Identification.

(a) Where Required. Spaces normally used by the general public shall have tactile identification, such as raised or recessed letters, labels or plaques. The tactile identification shall not be less than four feet six inches nor more than five feet six inches above the floor, mounted on the wall adjacent to the door of the space identified, on the side nearest the door handle.

(b) Floor Numbers at Elevators. Floor numbers shall be tactily identified for the visually handicapped by raised or recessed numbers attached to the elevator door jamb at each floor, not less than three feet six inches nor more than four feet six inches in height above the floor.

(c) Elevator Controls. Elevator controls shall have tactile identification by raised or recessed letters, labels or plaques.

(d) Door Handles. Doors to stairs other than exit stairs, loading platforms, boiler rooms, stages, and doors serving other hazardous locations shall have knurled or similarly marked door handles.

SBC 5508 Figures. Figures 55-1 through 55-18 of this chapter are illustrative only. See appropriate chapter sections for specific provisions.

Table 55-A

Sanitation Facilities for the Handicapped

Number of Dwelling Units/ Guest Rooms in Building	Number of Dwelling Units/Guest Rooms requiring Sanitation Facilities
0 - 7	0
8 - 39	1
40 - 59	2
60 - 79	3
80 - 99	4
100 - 119	5
120 - 139	6
140 - 159	7
160 - 179	8
180 - 199	9
200 -	10 plus 1 per each 50 units exceeding 200

Table 55-B

Viewing Positions

Motion Picture Auditoriums	
Occupant Load	Minimum Viewing Positions
500 and Less	4
Over 500	8
Other Assembly Occupancies	
500 and Less	4
501 - 1000	12
1001 - 1500	16
Over 1500	16 plus 1 per 500 additional

SBC 5502(e) Automobile Parking Facilities

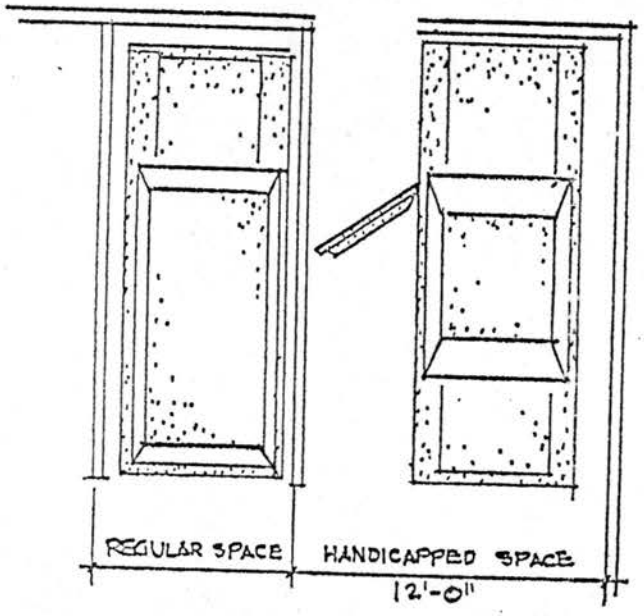

55-1

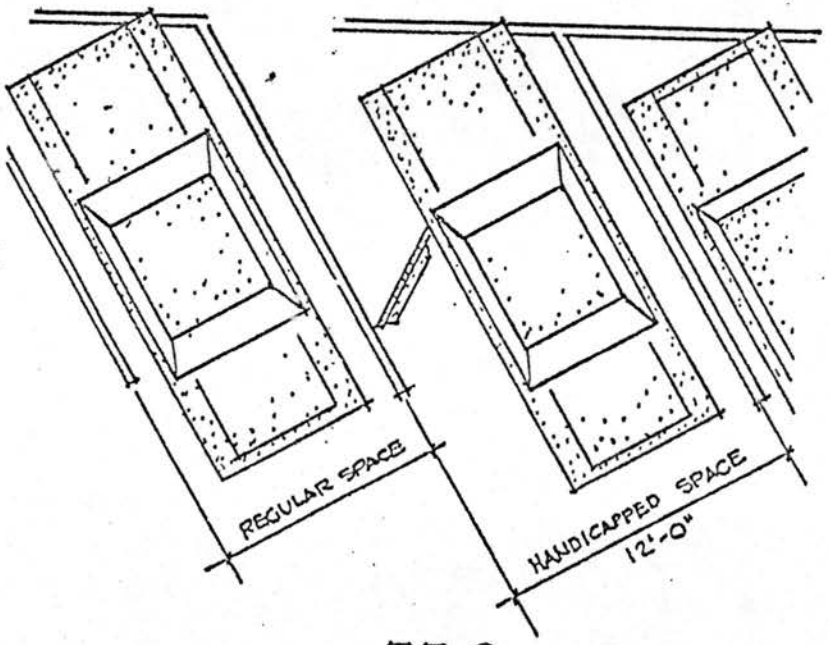

55-2

Drawings not to scale

SBC 5502(e) Automobile Parking Facilities

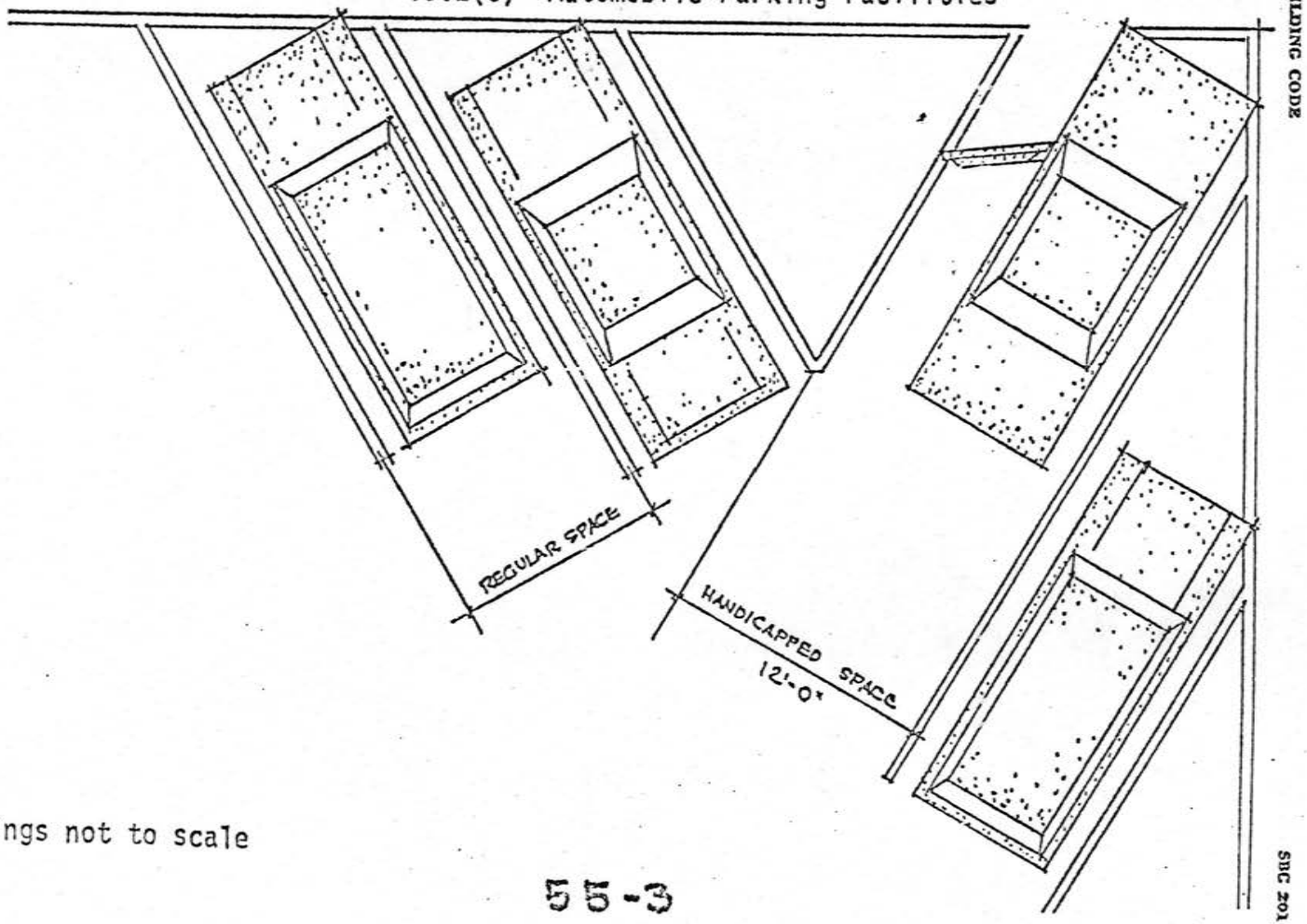

Drawings not to scale

SBC 5502(f) Doors and Doorways

55-4

55-5

55-6

Drawings not to scale

SBC 5502(g) Stair Tread Nosing

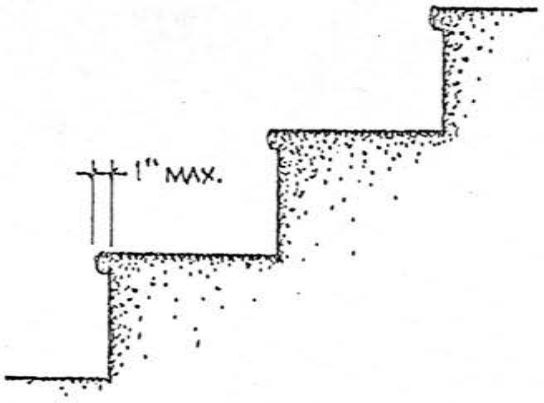

55-7

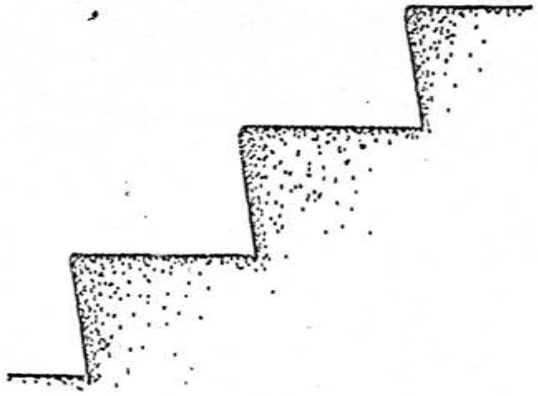

55-8

Drawings not to scale

SBC 5503(c) Sizes and Clearances

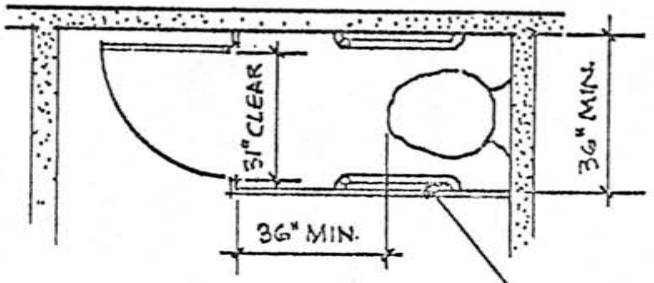

55-9

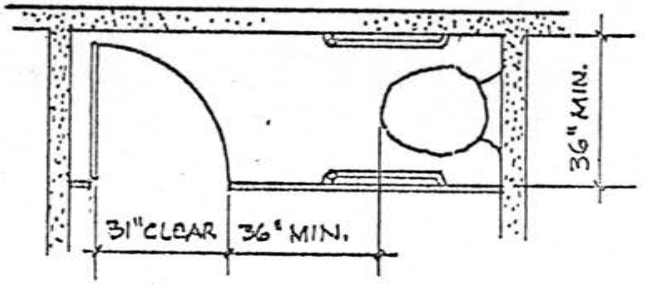

55-10

GRAB BARS

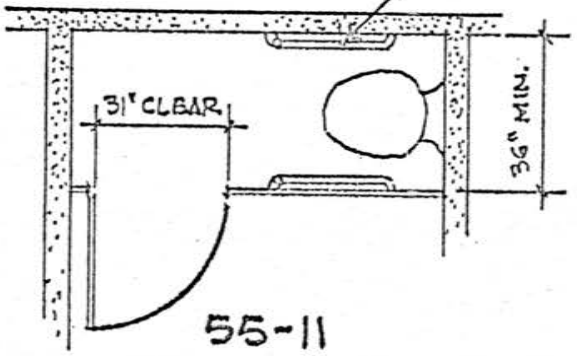

55-11

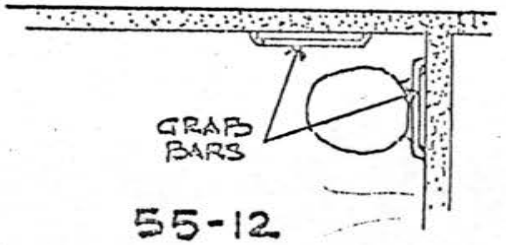

55-12

Drawings not to scale

SBC 5503(c) Sizes and Clearances

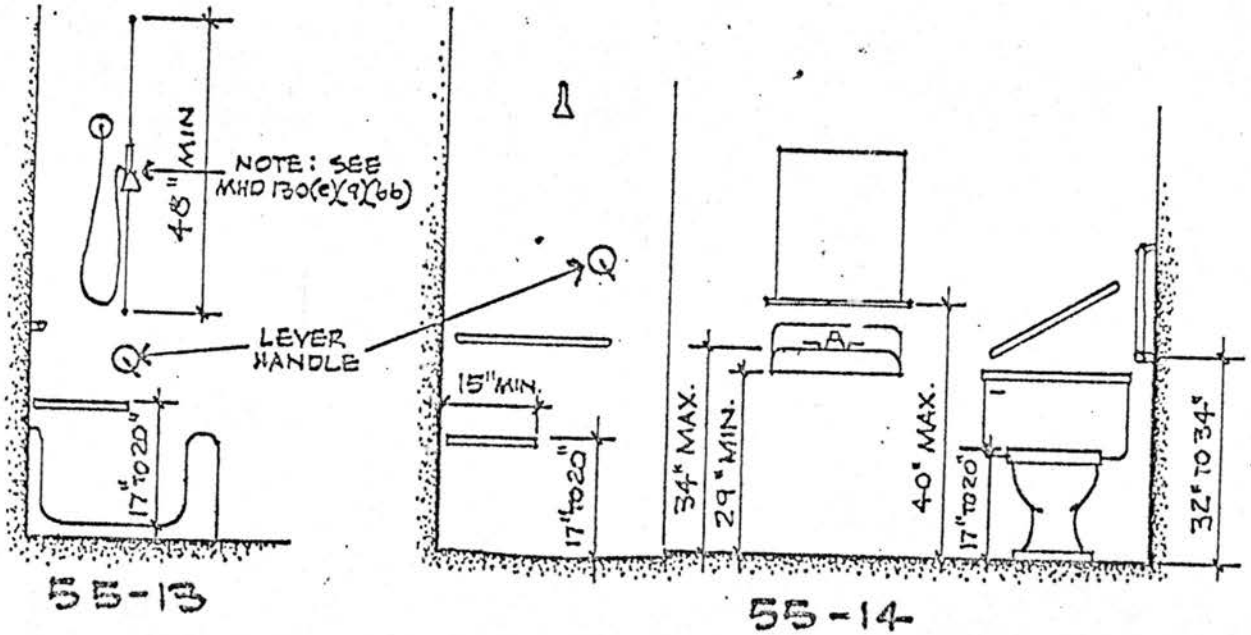

Drawings not to scale

SBC 5503(c) Sizes and Clearances

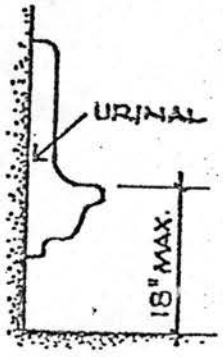

55-15a

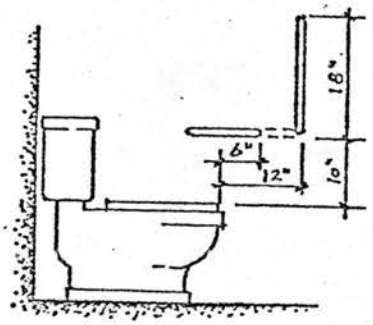

55-15b

Drawings not to scale

SBC 5504(a) Kitchen Facilities

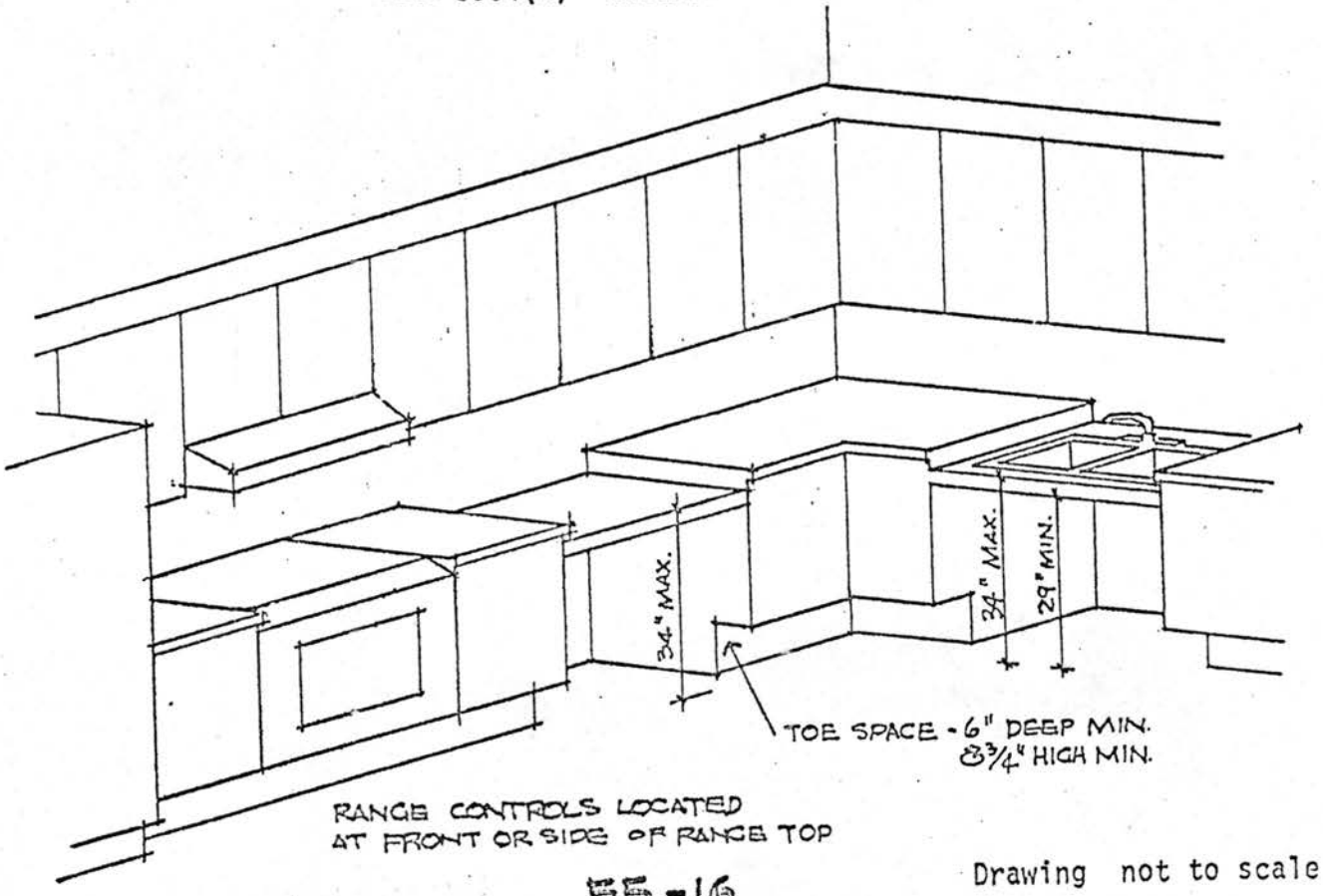

Drawing not to scale

55-16

SBC 5506(b) Elevator Controls

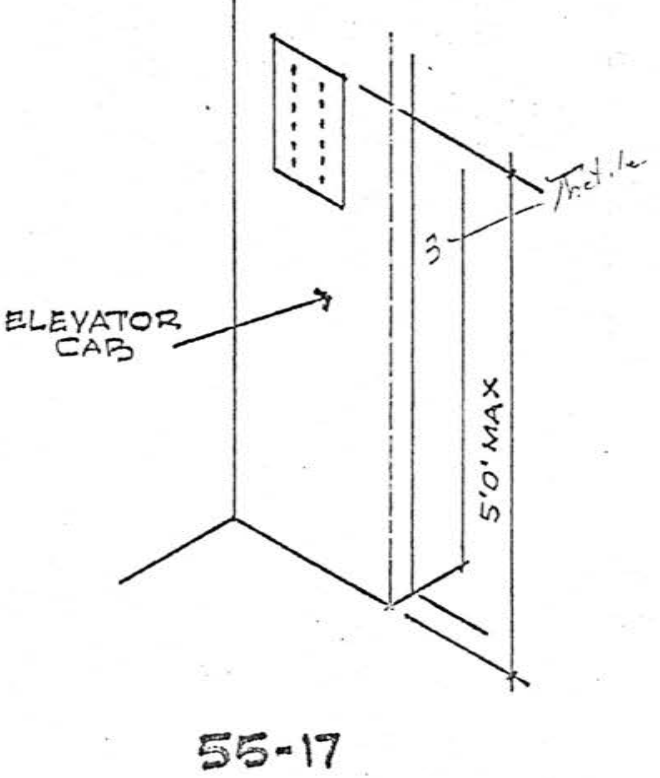

55-17

SBC 5507 Identification

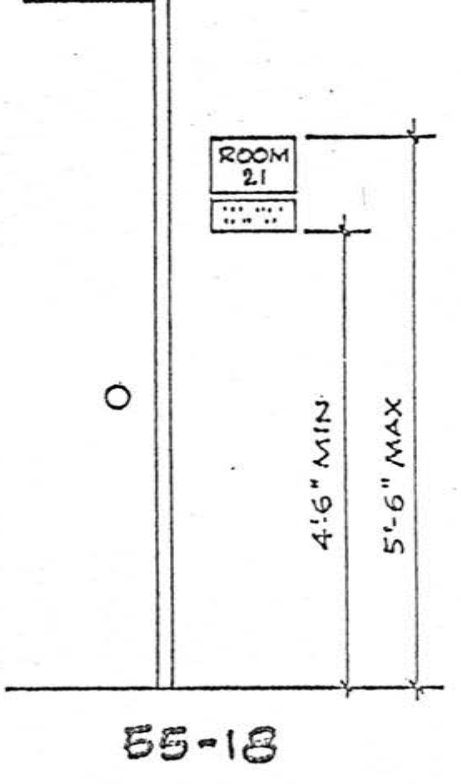

55-18

Drawings not to scale

SBC 201
MINNESOTA STATE

SBC 8601 Electrical Scope. All new electrical wiring, apparatus and equipment for electric light, heat and power shall comply with the regulations contained in the 1975 Edition of the National Electrical Code as approved by the American National Standards Institute (ANSI CI-1975) and Minnesota Statutes 326.2453, and the State Building Code as promulgated by the Commissioner of Administration, namely:

1.	UBC[1]	Section 605 (circuit)
2.	UBC	Section 810 (fire alarms)
3.	SBC[2]	Section 111 amending Chapter 5 of UBC Section 512 (G.F.I. Roof Access)
4.	SBC[2]	Section 111 amending Section 810 of the UBC (fire alarms)
5.	SBC	Section 111 amending 909 of UBC (fire alarms)
6.	UBC	Section 909 (fire alarms)
7.	UBC	Section 1302(b) (fire alarms)
8.	UBC	Section 1310 (fire detection)
9.	UBC	Section 1413 (fire warning system)
10.	UBC	Section 1807(j) (standby power)
11.	UBC	Section 3312 (exit signs and illumination)
12.	UBC	Section 4303(b)6 (floor/ceiling system)
13.	UBC	Section 4305(b) (floor/ceiling - roof/ceiling)
14.	SBC	Section 8806-2K. (standby power)
15.	SBC	Section 110 Electrical Requirements within the Flood Plain
16.	SBC	Chapter 55 Electrical Requirements for the Physically Handicapped
17.	SBC[3]	2MCAR 1.16001 - 1.16006 Electrical Requirements for Energy Conservation

[1] Uniform Building Code

[2] State Building Code

[3] See Composition and Use of the State Building Code

Amend SBC 304 to read as follows:

SBC 304 a. Approval. The State Building Inspector reserves to himself the responsibility for approving manufactured buildings, building systems and compoenents for compliance with the Code. Such responsibility may be delegated by him to approved evaluation agencies.

b. Bi-annual Aproval Renewal. Manufacturers shall submit plans bi-annually for re-evaluation and approval.

c. Approval Expiration. Approvals shall expire when there are revisions to the Code under which the approval was granted. At such time the manufacturer shall:

1. Submit entire new documentation for evaluation and approval or;

2. Submit evidence that the plans as approved are in compliance with the Code as revised.

SBC 314(c) deleted in its entirety.

Amend SBC 326 to read as follows:

SBC 326 Plan Approval Procedures. A plan approval shall be obtained from the State Building Inspector or the evaluation agency for manufactured buildings and systems. Such approvals are mandatory for all closed construction. Approval for open construction is optional to the manufacturer. General requirements:

(a) Applications, plans, specifications and other doucmentation shall be submitted in sufficient copies as required. Plan size shall not exceed 18 inches by 24 inches.

Amend SBC 330 to read as follows:

SBC 330 Required Construction Details. Plans shall provide or show, but not be

limited to, the following details:

(a) General

1. Details and method of installation of manufactured buildings or components to foundations or to each other.

2. All exterior elevations.

3. Cross sections as necessary to identify major building components.

4. Details of flashing, such as at openings and at penetration through roofs. Indicate flashing and gauge to be used.

5. Attic access and attic ventilation.

6. Exterior wall, roof and soffit material as well as finish.

7. Interior wall and ceiling finish material.

8. Fire separation details.

9. Sizes, locations and types of doors and windows.

10. Recommended foundation plans, vents and underfloor access.

11. Evidence of compliance with the Design and Evaluation Criteria for Energy Conservation in New Buildings, Additions, Remodeled Elements of Buildings, and Standards for Certain Existing Public Buildings, 1977 Edition 2MCAR 1.16001 through 1.16006.

Amend SBC 335(d) to read as follows:

(d) Seal Fee [ten dollars (10.00)] Twenty dollars (20.00) per seal. [Replacement seals, one dollar and fifty cents (1.50) per seal.]

Amend Minnesota Plumbing Code (MHD) Table 123(c)(3) III by adding sections 3P and 3Q as follows:

3P Copper Alloy Water Tube 1/2 inch and 3/4 inch ASTM B447

ASTM B-75

3Q Welded Brass Water Tube 1/2 inch and 3/4 inch ASTM B587

Amend MHD Table 123(c)(3)V as follows:

5Q Bituminized Fiber Drain and Sewer Pipe [D1860]D1861 SSP-1540A.

Amend MHD 123(d)(3)(ee) to read as follows:

(ee) Copper tube 3E or 3G with 3N wrought fittings or 3D fittings with provisions that it be installed to allow for expansion or contraction and that all stubs through concrete floors must be sleeved or protected by resilient material

Amend MHD 123(d)(3)(ff) as follows:

Copper Tube 3H with 3N fittings except that this material may not be buried under or embedded in a concrete slab.

Amend MHD Table 123(c)(3) III 3J to read as follows:

3J Seamless copper tube, Type M hard and soft temper H23-1 B88

Amend MHD 123(d)(3)(gg) to read as follows:

Copper 3J, 3Ja, 3Jb 3P or 30 with 3N fittings may be installed exposed or in frame partitions, or in tunnels and shafts, except that this material may not be laid underground or imbedded in masonry or concrete.

Amend MHD 123(d)(4)(cc) as follows:

Asbestos cement 5A and 5C and fittings laid on a continuous granular bed.

Amend MHD 123(d)(4)(ff) as follows:

Concrete 5N and 5M and fittings.

Amend MHD 123(d)(4)(gg) as follows:

Plastic 6A, 6B, 6C(1) and 6C(2) laid on a granular bed.

Amend MHD 123(d)(6)(bb) as follows:

Concrete 5N and 5M and fittings

1. MHD 123(d)(9)(ff) Plastic 6A or 6B with corresponding fittings may be installed except that no horizontal drain may exceed 35' in total length. No stack may exceed 35 feet in total height unless an approved expansion and contraction joint is installed at intervals not to exceed 35'.

2. MHD 123(d)(11)(hh) Plastic 6A or 6B with corresponding fittings may be installed except that no horizontal vent may exceed 35 feet in total length. No vent stack or stack vent may exceed 35 feet in total height unless an approved expansion and contraction joint is installed at intervals not to exceed 35 feet.

3. MHD 124(a)(2)(mm) Plastic Joints. Every joint in plastic piping shall be made with approved fittings be either solvent welded or fusion welded connections or with approved insert fittings and metal clamps and screws of corrosion-resistant material or threaded joints according to accepted standards. All solvent materials must meet approved recognized standards. Expansion and contraction joint materials and dimensions shall conform to ASTMD-2661 or ASTMD-2665 and shall be of an approved type.

Amend MHD 123(d)(14) Special Materials by adding a new section (gg) to read as follows:

(gg) Plastic Tubular Traps, Plastic (ABS and PVC) Tube and Tubular Fittings for Waste Connections. All tubular fittings must comply with the requirements of ASTM Standard F409.

Delete Table 127(b)(1).

Amend MHD 127(b) to read as follows:

(b) Required Minimum Number of Fixtures

(1) Plumbing fixtures shall be provided for the type of building occupancy and in the minimum number shown in Table 17-B of the Uniform Building Code as amended in SBC 111.

Types of building occupancy not shown, or special construction will be considered individually by the Administrative Authority.

Amend MHD 132(d)(2) as follows:

(2) Waterproof Flashings. Each vent terminal shall be made watertight with the roof by proper flashing of copper, lead, galvanized iron, or other approved flashings or flashing materials. Vent pipe terminals shall pass through the roof and shall be at least 2 inches in diameter.

When approved by the Administrative Authority, other materials or methods may be used which provide adequate protection.

Amend MHD 133(h)(1) by adding a new section (bb) to read as follows:

(bb) Overflow Drains. For overflow drains refer to Section 3207(c) of the Uniform Building Code.

Amend MHD 124(a)(2)(11-4) as follows:

(11-4) Mechanical Joints in Hubless Cast Iron Soil Pipe. Mechanical joints for hubless cast iron soil pipe and fittings may be made by using a neoprene sleeve and stainless steel retaining band as specified in CISPI standard 301, or

Mechanical joints for hubless cast iron soil pipe and fittings may be made by using a coupling consisting of the housing fabricated in two parts of grey-cast iron castings in accordance with ASTM A.48. The coupling gasket shall be molded neoprene rubber per ASTM C564. Coupling bolts and nuts shall be made of 18-8 stainless steel.

Amend SBC 8806 as follows:

Elevators, Dumbwaiters, Escalators and Moving Walks

1. Theeighth edition of American National Safety Code for Elevators, Dumbwaiters, Escalators and Moving Walks - ANSI A17-1971 including supplements ASNI A17.1a-1972, ANSI A17.1b-1973, as amended herein. ANSI A17.1c-1974, ANSI A17.1d-1975, ANSI A17.1e-1975, ANSI A17.1f-1975 and ANSI A17.1g-1976 are hereby incorporated by reference and made a part of this Code. All references in ASNI A17.1-1971 and supplements to the National Electrical Code ANSI C1-1968 and ANSI C1-1971 shall be changed to read: "National Electrical Code" ANSI C1 1975 (NFPA 70 -1975.)

SBC 8806-I is amended as follows:

SBC 8806-2-I. IN each elevator lobby served by elevators complying with rule 211.3 of the supplement to the Elevator Code identified as ANSI A17.1b - 1973, all automatic-operation elevators serving three or more stories above or below the main floor or having a travel of twenty five (25) feet or more above or below the main floor, at least one elevator car serving all floors in a building shall have a platform size that is standard for the elevator supplier, and capable of accomodating an ambulance stretcher in its horizontal position. The opening to the elevator car shall be capable of passageway for such ambulance stretcher.

Amend rule 100.4a to read as follows:

100.4a Vents required

Hoistways of elevators serving more than three (3) floors shall be provided with means of venting smoke and hot gases to the outer air in case of fire. Vents may be manually openable or remote control automatic vents.

Exceptions:

Hoistways not extending into the top floor of the building, in buildings other than hotels, apartment houses, hospitals and similar buildings with overnight sleeping quarters, where the hoistways are equipped with approved automatic sprinklers connected to the building water-supply system or to an approved automatic sprinkler system (See NFPA No. 13- 1976 Sprinkler System).

Such systems shall be responsive to an accumulation of smoke as well as heat at the top of the hoistway.

Amend rule 100.4b to read as follows:

100.4b Location of Vents

Vents shall be located:

1. In the side or top of the hoistway enclosure or directly below the floor or floors at the top of the hoistway, and shall open either directly to the outer air or through noncombustible ducts to the outer air; or

2. In the wall or roof of the pent-house or overhead machinery space above the roof, provided that openings have a total area not less than the minimum specified in Rule 100.4c and vents passing through machine rooms must be in noncombustible ducts.

When a vent is installed in the roof of the hoistway, a protective grill shall be provided to prevent persons from falling into hoistway.

Amend Rule 204.2a 2 as follows:

204.2a 2.

Slow burning combustible materials for insulating, sound deadening or decorative purposes may be used for lining enclosures if firmly bonded flat to the enclosure. Such materials shall not be padded. Materials used must have a Class I flame spread rating.

Amend SBC section 8806-9(g) as follows:

SBC 8806-9(g) One (1) car in each bank of automatic-operation elevators serving five (5) or more floors above or below the main floor shall be provided with emergency sevice controls as specified in Rule 211.3a of this supplement.

Amend rule 211.3a-4 of ANSI A17.1b-1973 as follows:

Rule 211.3a-4

A two position (off, and on,) key-operated switch shall be provided in or adjacent to an operating panel in each car and it shall be effective when the main floor key-operated switch (see 211.3a-1) is in the "on" position or a sensor has been activated and the car has returned to the main floor or other approved level. The key shall be removable only in the "off" position and when in the "on" postion, it shall place the elevator on emergency operation.

Amend SBC 8806-2 K to read as follows:

SBC 8806-2K

Standby power. In every building over one story and more than 75 feet in height, emergency power shall be provided for at least one passenger elevator in each bank. This emergency power shall be transferable to any other elevator in the bank and shall be capable of operating the elevator with a full load at contract speed or not less than 150 feet per minute. Emergency power shall be provided by an approved self-contained generator set to operate whenever there is a loss of power in the normal power supply. The generator shall be in a separate room having at least a one-hour fire resistive occupancy separation from the remainder of the building and shall have an on site fuel supply adequate to operate the equipment for two hours. See UBC Standards 18-1.

Amend SBC 8806 J to read as follows:

Exterior elevator call buttons shall be placed not higher than 60 inches above the floor. No emergency stop switch, door opening and door closing buttons, or elevator floor buttons shall be placed higher than 60 inches above the floor.

Add a new appendix "D" to the Minnesota State Building Code

Chapter 41

BUILDING SECURITY

Purpose

Sec. 4101. The purpose of this Chapter is to provide minimum standards of design, construction and quality of materials for all applicable buildings to safeguard life, property and the public welfare from the perils of burglary and other unlawful trespasses.

Scope

Sec. 4102. The provisions of this Chapter shall apply to all accessible openings into dwelling units or guest rooms of Groups (R-1), (R-3) and (R-4) occupancies.

Limitations

Sec. 4103. Building security methods which will create a hazard to life by obstructing any means of egress or any opening which could be used as an emergency exiting facility shall be prohibited.

The provisions of this Chapter shall not supersede the safety requirements relative to latching or locking devices on exit doors which would be contary to the

provisions of Chapter 33 nor shall the provisions of this Chapter be construed to waive any other provisions of this code.

Definitions

Sec. 4104. For the purposes of this Chapter, certain terms are defined as follows:

ACCESSIBLE OPENING is any opening, or part thereof, in a wall defining the perimeter of a dwelling unit or guest room, which is located within 12 feet (3.63 m) vertically or 6 feet (1.83 m) horizontally of any surface or building appendage which would tend to supply access to said opening from either ground level or adjacent occupancies or structures. This definition also includes openings leading from breezeways, porches or garage areas into dwelling units.

SWINGING DOOR ASSEMBLY is a unit composed of a group of parts or components that make up a closure for a passageway through a wall. For the purposes of this chapter, a door assembly consists of the following parts: door, hinges, locking device or devices, operation contacts (such as handles, knobs, push plates), miscellaneous hardware and closers, the frame, including the head and jambs plus the anchorage devices to the surrounding wall.

HORIZONTAL SLIDING DOOR ASSEMBLY forms a closure for a passageway through a wall and consists of a frame, one or more operative panels that slide (roll) horizontally within the frame and ancillary hardware such as rollers and locking devices. Such asemblies may also contain fixed panels which are fastened to the frame and/or to the wall in which the frame is installed.

WINDOW ASSEMBLY is a unit composed of a group of parts or components that make up a closure for an opening in a wall to control light, air and other elements, and

which normally includes: glazed sash, hinges or pivots, sash lock, sash operator, window frame, miscellaneous hardware and the anchorage between the window and the wall.

For additional definitions, see UBC Standards No. 41-1 and No. 41-2.

Swinging Doors

Sec. 4105. (a) General. All accessible prime swinging door assemblies shall be designed, constructed and installed so that, when the the locked position they shall not permit entry when subjected to the forces shown in Table 41-A and tested in accordance with UBC Standard No. 41-1 Part A.

(b) Entry Vision. All entry doors to dwelling units or guest rooms shall be arranged so that the occupant has a view of the area immediately outside the door without opening the door. Such view may be provided through approved view ports or glazed openings when provided in compliance with UBC Chapter 33 and Sections 4105(i) and 4107 of this Chapter.

(c) Frames/Jambs. Door jambs shall be installed with solid backing in such a manner that no voids exist between the strike jamb and the frame opening for a vertical distance of 6 inches (150 mm) each side of the strike.

1. Hollow metal frames shall be filled with concrete or similar noncrushable subtance on the strike side of the frame.
2. In wood framing, horizontal blocking shall be placed between studs at door lock height for 2 stud spaces each side of the door opening. Trimmers shall be full length from the header to the floor with solid backing against sole plates.
3. Jambs for inswinging doors shall have the stop and jamb of one piece or

equivalent construction.

(d) Hinges. Hinges for outswinging doors shall be equipped with nonremovable hinge pins or a mechanical interlock to preclude removal of the door from the exterior by removing the hinge pins. In wood framing, door frames shall be shimmed behind the hinges and such hinges shall be mounted with a minimum of 2 No. 8 size screws, or equivalent, penetrating at least 2 inches (5cm) into solid backing beyond the surface to which the hinge is attached.

(e) Bolts and Latches. A minimum of one deadlocking bolt and one deadlocking latch, or equivalent, shall be provided for all accessible single swinging doors. Such bolts shall have minimum projections of 1 inch (25 mm) and such latches shall have minimum projections of 1/2 inch (12 mm).

1. Pairs of swinging doors shall have the inactive leaf secured by vertical throw bolts with a minimum projection of 1/2 inch (12 mm), or equivalent, and the active leaf shall be subject to the same provisions as for single swinging doors.

Exception: Doors connecting directly between dwelling units or guest rooms shall be equipped with a minimum of one deadlocking bolt which shall be key operated from both sides or equivalent.

(f) Strikes. Metal strikes shall be required for all locking devices and shall have a minimum thickness of .062 inches (1.5 mm). In wood framing, such strikes shall be mounted with a minimum of 2 No. 8 size screws, or equivalent, penetrating at least 2 inches (5 cm) into solid backing beyond the surface to which the strike is attached.

1. Strikes used for dead latches shall not allow the dead-latch plunger to enter the strike hole with the latch after installation.

(g) Lock Activating Devices. Lock cylinders shall be so designed or protected as to preclude disassembly from the exterior by twisting, prying, pulling or other manipulation.

1. When key-in-knob locksets are constructed such that the deadbolt and dead latch are mechanically interconnected, such locksets shall be so designed or protected that the lock cannot be compromised by wrenching the knob from the exterior or knocking the knob off to gain access to the locking means and manipulating the bolt and latch by hand or with the aid of a screwdriver to gain access.

(h) Keying Requirements. Keyed locks, other than master keyed locks, shall have a minimum of 5 tumblers or be of such design as to provide a minimum of 10,000 possible interchange-free combinations. Master-keyed locks shall provide a minimum of 1,000 interchange-free combinations.

1. A system of construction keying must be provided which will insure that the use of construction keys will be precluded after occupancy by a new tenant or resident.

2. All dwelling units or guest rooms grouped within a building or complex shall have access locks keyed differently.

(i) Door Panels and Glazing. Door panels or glazing materials located within 36 inches (900 mm) of the inside lock activating device of an accessible swinging door assembly shall withstand the required impacts in accordance with the appropriate provisions of UBC Standard 41-1 Part A, Sec. 41.1007(h).

Exceptions: 1. Openings in doors, when such openings do not exceed 2 inches (50 mm) in the smaller dimension.

2. When the glazing material is U.L. Listed Burglary Resisting Glazing Material (UL Standard 972) installed in an approved manner according to manufacturer's specifications.

3. When the opening is protected by approved metal bars or grilles having a pattern such that the minimum dimension of any opening on the bars or grilles does not exceed 2 inches (50 mm).

Horizontal Sliding Doors.

Sec. 4106. (a) General. All accessible prime horizontal sliding doors shall be designed, constructed and installed so that, when in the locked position they shall not permit entry when tested in accordance with UB C Standard No. 41-1 Part B.

Windows

Sec. 4107. (a) General. All accessible prime windows assemblies shall be designed, constructed and installed so that, when in the locked position they shall not permit entry when tested in accordance with UBC Standard No. 41-2.

Exceptions: 1. Fixed windows which are not designed to open; the glazing material of which may be installed in a sash, or may be installed directly into a window frame.

2. Windows located more than 36 inches (900 mm) from the inside lock activating device of a swinging door assembly when such windows have a clear cross section of 96 inches^2 (600 cm^2) or less and have as their smallest dimension a span of less than 6 inches (150 mm).

3. "Windows that are not emergency egress as regulated by UBC Sections 1304 and 1404, may be protected by approved metal bars or grilles having a pattern such that the minimum dimension of any opening in the bars or grilles shall not exceed 2 inches. The

windows shall be equipped with a quick-acting release requiring no special knowledge or skill to operate.

Disassembly

Section 4108. All accessible prime door and window assemblies and components shall incorporate no screws, bolts, nails, staples or other mechanical fasteners which are accessible from the exterior and which could be removed by hand with the aid of a knife, screwdriver or pliers within a period of 5 minutes, thus permitting entry by disassembly.

Acceptance

Sec. 4109. The methods of installation and on-site assembly of swinging door units and other assemblies as described in this Chapter shall be deemed to meet the standards of this Chapter.

All assemblies and components which are otherwise subject to the Standards of this Chapter shall have a label or other identification indicating compliance with the applicable standards.

Exception: Such labeling requirements may be waived and the subject products deemed to qualify where proof of compliance satisfactory to the building official is submitted as per American National Standard Practice for Certification by Producer or Supplier, ANSI Z34.2-1969.

Alternate Security Provisions

Sec. 4110. The provisions of this Chapter are not intended to prevent the use of any device or method of construction not specifically prescribed by this Chapter when such alternate provides equivalent security and has been approved as provided by UBC 106 and UBC 107.

TABLE NO. 41-A SWINGING DOOR ASSEMBLIES[1]

TEST	Measure	Level
Static Bolt Load[2]	Resistance	150 lbf (670 N)
Hinge Pin Tensile Load[3]	Resistance	50 lbf (225 N)
Jamb/Wall Stiffness[4]	Force to Spread	1350 lbf (6000 N)
	Increase in Lockfront to Strike Space,	0.375 In. (9.5mm)
Knob Torque[5]	Resistance (25 N-m)	18.5 lbf-ft
Cylinder Core Load	Resistance	290 lbf (1300 N)
Knob Impact[5]	Resistance	One blow of 74 ft-lbf (100 J)
Door Impact	Impact resistance at center and panel	2 blows of 59 ft-lbf (80 J)
	Impact resistance at glazing[6]	One blow of 74 ft-lbf (100 J)
Hinge Impact	Impact resistance at hinge	2 blows of 59 ft-lbf (80 J)
Bolt Impact	Impact resistance at bolt	2 blows of 59 ft-lbf (80 J)

[1]For test methods see UBC Standard No. 41-1, Part A.

[2]Minimum projection of 1 In. (25 mm) for bolts and 1/2 In. (12 mm) for latches.

[3]Applies to outswinging doors only.

[4]Bolt of latch must remain in strike.

[5]Applies to key-in-knob locksets where the bolt and the latch are mechanically interconnected such that a single action projects or retracts both.

[6]Does not apply when the glazing starts at a distance of 36 In. (900 mm) or more from the lock.

Note: Lbf = pounds force.

Add new State Building Code Standards

STATE BUILDING CODE SBC 111 APPENDIX "D"

STATE BUILDING CODE STANDARD NO. 41-1

TESTS FOR SECURITY OF DOOR ASSEMBLIES

Part A--Swinging Doors

See Section 4105, State Building Code

Scope

Sec. 41.1001. Part A of this Standard covers test methods for swinging door assemblies that are required for building security by the State Building Code.

The wall assembly described in Section 41.1005 is considered suitable for the scope of these methods of test. Wall construction different in dynamic response from that described in Section 41.1005 may require testing according to Section 41.1007(d).

Definitions

Sec. 41.1002. BOLT is a metal bar which, when actuated, is projected (or "thrown") either horizontally or vertically into a retaining member, such as a strike plate, to prevent a door from moving or opening.

BOLT PROJECTION (OR BOLT THROW) is the distance from the edge of the door, at the bolt center line, to the farthest point on the bolt in the projected position, when subjected to end pressure.

COMPONENT, as distinguished from a part, is a subassembly which combines with other components to make up a total door assembly. The prime components of a door assembly include: door, lock, hinges, jamb/wall, jamb/strike and wall.

CYLINDER is the cylindrical subassembly of a lock containing the cylinder core, tumbler mechanism and the keyway. A double cylinder lock is one which has a key-actuated cylinder on both the exterior and interior of the door.

CYLINDER CORE (OR CYLINDER PLUG) is the central part of a cylinder containing the keyway, which is rotated by the key to operate the lock mechanism.

DEADBOLT is a lock bolt which does not have a spring action as opposed to a latch bolt, which does. The deadbolt must be actuated by a key and/or knob or thumb turn and when projected becomes locked against return by end pressure.

DEAD LATCH (OR DEADLOCKING LATCH BOLT) is a spring-actuated latch bolt having a beveled end and incorporating a plunger which, when depressed, automatically lock the projected latch bolt against return by end pressure.

DOOR ASSEMBLY is a unit composed of a group of parts or components which make up a closure for an opening to control passageway through a wall. For the purposes of this standard, a door assembly consists of the following parts: door, hinges; locking device or devices; operation contacts (such as handles, knobs, push plates); miscellaneous hardware and closers; the frame, including the head and jambs plus the anchorage devices to the surrounding wall and a portion of the surrounding wall extending 36 inches (900 mm) from each side of the jambs and 16 inches (400 mm) above the head.

JAMB is a vertical member of a door frame to which the door is secured.

JAMB/STRIKE is that component of a door assembly which receives and holds

secure the extended lock bolt; the strike and jamb used together are considered a unit.

JAMB/WALL is that component of a door assembly to which a door is attached and secured; the wall and jamb, used together, are considered a unit.

KEY-IN-KNOB is a lockset having the key cylinder and other lock mechanisms such as a push or turn button contained in the knobs.

LATCH (OR LATCH BOLT) is a beveled, spring-actuated bolt, which may or may not have a deadlocking device.

LOCK (OR LOCKSET) is a keyed device (complete with cylinder, latch or deadbolt mechanism, and trim such as knobs, levers, thumb turns, escutcheons, etc.) for securing a door in a closed postion against forced entry. For the purposes of this Standard, a lock does not include the strike plate.

LOCK FRONT is the outer plate through which the locking bolt projects and which is usually flush with the edge of the door.

PART, as distinguished from component, is a unit (or subassembly) which combines with other units to make up a component.

STRIKE is a metal plate attached to, or mortised into, a door or door jamb to receive and to hold a projected latch bolt and/or deadbolt in order to secure the door to the jamb.

SWINGING DOOR is a stile (side) hinged door.

Samples for Testing

Sec. 41.1003. Specimens shall be representative and the construction shall be

verified by assembly drawings and bill of materials. Complete manufacturer or fabricator installation instructions and full-size or accurate scale templates for all items or hardware shall be included.

Test Equipment Performance

Sec. 41.1004. (a) Door Ram. The door ram shall be a pendulum system with a cylindrical weight capable of delivering horizontal impacts of 59 ft-lbf (80 J). The striking end of the weight shall be hemispherical and have a diameter of approximately 6 inches (150 mm). The impact nose may be made of any durable impact resistant material such as epoxypolyamide resin.

(b) Componet Ram. The component ram shall be a pendulum system capable of delivering horizontal impacts of 74 ft-lbf (100 J). The pendulum weight shall be cylindrical with a maximum diameter of 3 inches (7.6 cm) and a striking end consisting of a 1/4 inch (6 mm) carriage bolt, or equivalent.

(c) Vertical Impactor. The vertical impactor shall be a rigid pendulum system consisting of a weight with a flat rectangular striking surface capable of delivering downward impacts of 74 ft-lbf (100 J).

(d) Torque Applicator. The portable torque applicator shall be capable of delivering and measuring up to 18.5 lbf-ft (25 N-m) of torque to door knobs. The torque-loading adapter shall be designed to grip the knob.

(e) Tension-Loading Device. The tension-loading device shall be capable of delivering and measuring tensile forces of up to 290 lbf (1300 N).

(f) Compression-Loading Device. The compression-loading device shall be capable of delivering and measuring compresive forces of up to 150 lbf (670 N).

(g) Jamb-Spreading Device. The jamb-spreading device shall be capable of delivering to door jambs and measuring spreading forces of up to 1350 lbf (6000 N) with a means of measuring up to 1/2 inch (12 mm) of spread in the door opening. The device shall have on each end either a loading-bearing plate or pressure foot which provides a minimum contact surface of 1 1/2 by 5 inches (38 mm by 125 mm).

(h) Instrument Accuracy. All test monitoring equipment shall be calibrated to an accuracy of ± 5 percent. The impact energy of each pendulum system shall be controlled to within ± 1 percent.

(i) Manipulation Tools. Tools used for manipulation tests of this Standard shall consist of the following: a knife or spatula with a thin blade approximately 1/32 inch (0.8 mm) thick, not more than 1 inch (25 mm) wide and no longer than 6 inches (150 mm); slotted and phillips type screw drivers not exceeding 10 inches (250 mm) in length; common hand and needle nose pliers not exceeding 8 inches (200 mm) in length; and a piece of stiff steel wire with a diameter of approximately 1/16 inch (1.6 mm) and length of not in excess of 3 feet (900 mm).

Construction and Size

Sec. 41.1005. The construction and size of the test door assemblies, consisting of single doors, doors in pairs, special-purpose doors (such as Dutch doors), jambs and headers, and all hardware components shall be representative of that for which acceptance is desired.

The test fixture for door, door jamb, hinge, lock strike and other components shall consist of a vertical wall section constructed from 2 by 4 wood studs, 16 inches (410 mm) on center with double studding around the rough openings and outer edges of the fixture. The test fixture shall be covered with 1/2 inch (12 mm) exterior grade plywood sheathing on the exterior and 1/2 inch (12 mm) gypsum board on the interior and shall be secured to a supporting fixture and to the laboratory floor such as to simulate the rididity normally provided to a door assembly in a building by the ceiling, floor and walls..

An alternate test fixture for lockset components consisting of a small door assembly may be used. The frame shall be fabricated from steel angle and plate at least 3/16 inch (5 mm) thick. The test panel shall be 24 inches (600 mm) square and 1 3/4 inches (45 mm) thick, made by bonding three pieces of plywood together or by cutting a section from 1 3/4 inch (45 mm) solid wood core door. A 2 by 2 by 1/8 inch (50 by 50 by 3 - mm) steel angle shall be bolted to the hinge edge of the door panel, and a removable steel strike plate shall be bolted to the frame at the lock position of the door panel.

The test fixture for static bolt load tests shall consist of a vertical panel fabricated from wood attached to a stable horizontal base. The top edge shall be about 1 3/4 inches (45 mm) thick and the top edge shall be prepared to permit the lockset which is being tested to be mounted in the panel in accordance with the manufacturer's instructions.

Mounting for Test

Sec. 41.1006. Prepare doors and door jambs for the installation of locksets and hinges in conformance with the manufacturer's instructions. Follow the manufacturer's instructions for fastening the jamb to the test fixture described in Section 41.1005.

To test doors, door jambs, hinges, and jamb/strikes as components, install them in the component test fixture described in Section 41.1005. Except when testing hinges, hinge the door with one and one-half pair of 4 1/2 inch (115 mm) steel butt hinges, and fix it in the closed-locked position (at the normal lock point) with a real or simulated latch bolt having sufficient strength and stiffness to prevent it from failing during test. In the absence of other construction specifications, make the clearances on the lock side, hinge side and top of the door 1/8 $\pm$ 1/64 (3.2 $\pm$ .04 mm). Clearance at the threshold is not considered critical in these tests.

To test locksets as components, install them in the alternate component test fixture described in Section 41.1005. Fix the test panel in the closed-locked position at the normal locking point. Hinge the test panel with two 4 1/2 inch (115 mm) steel butt hinges.

To test locksets for static bolt load, install them in the the test fixture described in Section 41.1005.

Conduct of Tests

Sec. 41.1007. (a) Test Sequence. Perform tests in the same sequence as presented below, as appropriate for the item under test, using new components for each destructive test.

(b) STatic Bolt Load Test. To test locks as components, mount the lock in the

test fixture described in Section 41.1006. Lock the door lock with the deadbolt and dead latch in the fully projected position. If the lock incorporates a dead latch plunger, attach a 1/4 inch (6.5 mm) spacer to the lock front. Allow the dead latch plunger to project flush with the top of the spacer, and hold it in that position with a piece of tape or by other suitable means.

Place the test fixture and lock in a compression-testing machine, or mount it on a firm, level surface with the compression-loading device directly above it, the loading face parallel to the lock front, and the axis of the hydraulic ram perpendicular to the lock front. Apply an increasing compressive load to the end of the latch bolt or the deadbolt to the required resistance load and note the bolt or latch projection (the distance between the lock front surface to the farthest point on the bolt or latch at the center line). Such projection shall not be less than 1/4 inch (6.5 mm) while under load.

To test for bolt projection, apply end pressure to the projected deadbolt or latch and measure the distance from the lock front surface to the farthest point on the bolt or latch at the center line.

Following the test of a lock incorporating a dead latch, place the strike plate over the latch of a dead latch to determine whether it is possible for both the dead latch and the dead latch plunger to enter the hole in the strike simultaneously.

(c) Hinge Pin Tensile Load. Drill a hole into the end of the exposed hinge pin with a No. 21 drill, centered on and aligned with the axis of the pin to a depth of 0.5 inch (12 mm). Tap the hole with a 10-32 tap and attach the tensile-loading adapter to it with a hardened cap screw. Clamp one leaf of the hinge in a vice so that the hinge pin is in the horizontal plane. Attach the tensile-loading device to a rigid load-bearing support in front of the hinge and align the pulling axis with the axis of the hinge pin. Attach the tensile-loading adapter to the tensile device

and apply the required load.

(d) Jamb/wall Stiffness Test. Prepare the test specimen in accordance with Section 41.1006 using the full-size test fixture. Position the jamb-spreading device between the door jambs at lock height. Apply increasing force as required and measure the space between the lock front and strike.

While the required load is being applied, or the lock front-to-strike distance increased, push or pull on the door to determine whether the deadbolt or dead latch is engaged with the strike.

(e) Knob Torque Test. Prepare the test specimen in accordance with Section 41.1006 and lock the door or test panel in the closed position. Attach the torque-loading adaptor to the knob and connect the torque applicator to it. Alternately subject the knob to a torque of up to the required torque once in both the clockwise and counter-clockwise directions, applying the torque as rapidly as possible. Inspect the lock to determine whether the bolt is retracted from the strike when the torque is applied. If the knob is broken off, attempt to open the door or test panel by manipulating the lock mechanism by hand or with the aid of manipulation tools as described in Section 41.1004(i) (such lock mechanism shall resist manipulation for a period of not less than 5 minutes.)

With the door or test panel open, and the deadbolt or dead latch in the projected, locked postion, attempt to (1) depress the deadbolt by applying hand pressure to its end or (2) depress latch and dead latch plunger fully, allow the latch to extend, then slowly allow the plunger to project until the last point of dead locking is reached.

(f) Cylinder Core Tension Test. Prepare the test specimen in accordance with Section 41.1006 and lock the door or test panel in the closed postion. Using a No. 21 drill, drill a hole in the cylinder core adjacent to the keyway to a minimum depth

of 1/2 inch (12 mm). Tap this hole with a 10-32 thread. Attach the tensile-loading device to a rigid load bearing support in front of the cylinder and align the pulling axis with a 10-32 hardened cap screw fully threaded into the tapped hole. Connect the cylinder tensile-loading device to the adaptor and apply the required tensile force to the cylinder. Following this test, release the load and attempt to open the door or test panel by manipulating an exposed lock mechanism for a period of 5 minutes by hand or with the aid of manipulation tools as described in Section 41.1004(i). If the core or cylinder is not damaged, open the door and test the dead latch and deadbolt for end pressure resistance as in Section 41.1007(e).

(g) Knob Impact Test. Prepare the test specimen in accordance with Section 41.1006 and lock door or test panel in the closed position. Position the vertical impactor so that the pendulum arm is horizontal when the striking weight contacts the top of the door knob, and its center of gravity is in the vertical center-line through the knob. Raise the weight to the height necessary to deliver the required impact and release it. Deliver the required number of impacts to the knob. After each impact, attempt to open the door or test panel by turning the knob, and if the knob is broken off, by manipulating the exposed lock mechanism by hand or with the aid of manipulation tools as described in Section 41.1004(i). Such lock mechanism shall resist manipulation for a period of not less than 5 minutes. Open the door and test the dead latch and deadbolt for end pressure resistance as in Section 41.1007(e).

(h) Door Impact Test. Prepare the test specimen in accordance with Section 41.1006, using the full-size test fixture, and lock the door in the closed position. Set up the door ram pendulum weight so that its axis is horizontal, and perpendicular to the face of the door at a point defined by the intersection of the vertical center line of the door and a line of the door and a line from the center of the bolt to the center of the mid-height hinge (or the midpoint between hinges, when the door is hung

with two hinges).

Attach to the door, centered on the impact point, a rigid foamed polystyrene impact buffer which has a diameter of 6 inches (150 mm), a thickness of 2 inches (50 mm) and a density of 2 lbs/ft^3 (32 Kg/m^3). Position the door ram such that its striking nose just touches the surface of the buffer when at rest. Pull back the pendulum weight to the height necessary to produce the required impact, and release it. Subject the door to two impacts at each required impact level, attaching a new buffer for each impact. If the door is forced open by the test, without damaging the jamb/strike or lock component, the door specimen fails the test. If the door surface is broken, attempt to reach inside the door and unlock it from the inside.

If the door has one or more recessed panels, subject the one closest to the lock to two impacts at each required impact level. Locate the impact point on the corner of the panel closest to the lock, 3 inches (75 mm) in from the vertical and horizontal edges of the panel. Perform the test as described above, attaching a new impact buffer for each impact. If the panel is broken, attempt to open the door by reaching through the opening and unlocking the door from the inside.

To test glazing panels, set up the component ram pendulum weight so that, at rest, its striking nose just touches the front surface at a point located along a line from the center of the inside lock activating device through the closest point on the perimeter of the glazing panel, which is within 36 inches (900 mm), and just far enough onto the panel to ensure that the impactor clears the edge of the door and the panel. Pull back the pendulum weight to the height necessary to produce the required impact and release it. If the panel is broken, reach through the opening and attempt to open the door by unlocking it from the inside.

Following the door impact test, inspect the door to determine whether there is enough damage to invalidate the subsequent tests; if there is, replace it.

(i) Hinge Impact Test. Prepare the test specimen in accordance with Section 41.1006 using the full-size test fixture and lock the door in a closed position. When testing hinges incorporating a mechanical interlock between the leaves in the closed position and door assemblies using such hinges, remove the hinge pin during this test. Set up the door ram pendulum weight so that its axis is horizontal, and perpendicular to the exterior face of the door at a point 8 inches (200 mm) from the bottom hinge on a horizontal line through the midpoint of the hinge.

Attach an impact buffer as described in section 41.1007(h) to the face of the door, centered on the impact point, and position the pendulum so that its striking nose just touches the surface of the buffer when at rest. Pull back the pendulum weight to the height necessary to produce the required impact and release it. Subject the door to two impacts at each required impact level, attaching a new buffer for each impact. After each impact, try to open the door.

A door component failure consists of any splitting or fracture of the door which allows it to be opened; a jamb component failure consists of any splitting, fracture or pullout of the attachment screws which allows the door to be opened; a hinge component failure consists of any damage to the leaves or pin of the hinge which allows the door to be opened.

Following the hinge impact test, inspect the components to determine whether there is sufficient damage to invalidate the subsequent test; if there is, replace those damaged.

(j) Bolt Impact Test. Prepare the test specimen in accordance with Section 41.1006 and lock the door in the closed position. Set up the door ram pendulum weight so that its axis is horizontal, and perpendicular to the face of the door at a point defined by the intersection of a vertical line 8 inches (200 mm) from the lock edge, and a line from the center of the bolt to the center of the mid-height hilnge (or the midpoint between hinges when the door is hung with two hinges).

Attach an impact buffer as described in Section 41.1007(h) to the face of the door, centered on the impact point, and position the pendulum so that it just touches the surface of the buffer when at rest. Pull back the pendulum weight to the height necessary to produce the required impact and and release it. Subject the door to two impacts at each required impact level, attaching a new buffer for each impact. After each impact, try to open the door or test panel by turning the knob, and test the deadbolt and dead latch for end pressure resistance as in Section 41.1007(e).

Acceptance Criteria

Sec. 41.1008. (a) General. An item shall fail a test if an individual can open the door from the outside by pushing or pulling on it, by turning the knob, by manipulating an exposed lock mechanism, by reaching through damaged portions of the door and unlocking it from the inside; or can enter through damaged portions of the door even though it might not be possible to open the door; or if the dead latch or deadbolt can be depressed by a static load applied by hand after being subjected to the levels of energy set forth in the Uniform Building Code.

A jamb/strike component failure consists of a pullout or fracture of the strike attachment screws or any splitting, bending or fracture of the door jamb at the strike which permits the door to be opened; a door component failure consists of any splitting or fracture of the door which allows it to be opened; a lock component failure consists of any damage to the lock mechanism or bolt which allows the door to be opened after being subjected to the levels of energy set forth in the Uniform Building Code.

(b) Disassembly. Door assemblies and components shall incorporate no scerew, bolt, nail, staple or other mechanical fastener which is accessible from the outside and which could be removed by hand or with the aid of manipulation tools as described in Section 41.1004(i) within a period of 5 minutes thus permitting entry by

disassembly.

(c) Strike Hole Size. For locks incorporating dead latches, the size of the latch retaining hole in the strike shall be such that it shall not be possible for both the dead latch and dead latch plunger to enter the hole together when the latch is fully extended.

(d) Bolt Pressure Resistance. When locks are tested, the force required to depress the latch or deadbolt from the locked and projected position shall not be less than specified in the Uniform Building Code.

Report

Section 41.1009. The test report shall include:

(a) Name and Address of the facility or laboratory performing these tests and issuing the report as well as the dates of testing and issuance of the report.

(b) Identification of the sample tests (e.g., name of manufacturer, model and/or series number of product and other information as may be pertinent).

(c) Final assembly drawing(s) and components list relative to type, size, location and number of anchors, locking devices and mounting screws used.

(d) Statement indicating that specimen either passed or failed these tests.

(e) Statement that all tests were conducted in accordance with these procedures.

See Section 4106, State Building Code

Scope

Sec. 41.1011. Part B of this Standard covers test methods for sliding door assemblies that are required for building security by the Uniform Building Code .

Test Equipment

Sec. 41.1012. Four tension-loading devices capable of delivering and measuring tensile forces of up to 300 lbf (1340 N) with an accuracy of + 5 percent for each applied load level are required for these tests.

Manipulation tools shall consist of: a knife or spatula with a thin blade approximately 1/32 inch (0.8 mm) thick, not more than 1 inch (25 mm) wide and no longer than 6 inches (150 mm); slotted and phillips type screw drivers not exceeding 10 inches (250 mm) in length; common hand and needle nose pliers not exceeding 8 inches (200 mm) in length; and a piece of stiff steel wire with a diameter of approximately 1/16 inch (1.6 mm) and a length of not in excess of 3 feet (900 mm).

Disassembly

Sec. 41.1013. Door assemblies and components shall incoporate screw, bolt, nail, staple or other mechanical fastener which is accessible from the outside and which could be removed by hand or with the aid of manipulation tools as described in Section 41.1012 within a period of 5 minutes thus permitting entry by disassembly.

Samples for Testing

Sec. 41.1014. Specimens shall be representative, and the construction shall be

verified by assembly drawings and bill of materials. Complete manufacturer or fabricator installation instructions and full-size or accurate scale templates for all items and hardware shall be included.

Construction and Size

Sec. 41.1015. The construction and size of the test door assemblies, jambs and headers, and all hardware components shall be representative of that for which acceptance is desired.

The door assembly and mounting in the support fixture shall simulate the rigidity normally provided to a door assembly in a building by the ceiling, floor and walls.

Tests

Sec. 41.1016. Sample doors submitted for testing shall be glazed. Panels shall be closed and locked. Holes may be drilled at convenient locations on the assembly to attach load adapter brackets and the glazing may be taped to prevent possible injury from shattering under load. Loads may be applied from either the interior or exterior side of the door.

Prior to testing, remove from the sliding door assembly all mechanical fasteners which can be removed from the exterior by hand or with the aid of manipulation tools, as described in Section 41.1012, within a period of 5 minutes.

Tests shall be performed in the following order:

Test I. With the panels in the normal position, a concentrated load of 300 pounds (1340 N) shall be applied separately to each vertical stile incorporating a locking device, at a point on the stile within 6 inches (150 mm) of the locking device, in the direction parallel to the plane of the glass that would tend to open the door. Remove the load and determine if the locking device can be unlocked by manipulation as described in Test VIII.

Test II. With panels in the normal position, a concentrated load of 300 pounds (1340 N) shall be applied separately to each vertical pull stile incorporating a locking device, at a point on the stile within 6 inches (150 mm) of the locking device, in the direction parallel to the plane of the glass that would tend to open the door while, simultaneously, an additional concentrated load of 150 pounds (670 N) is applied to the same area of the same stile in a direction perpendicular to the plane of glass toward the interior side of the building. Remove the load and determine if the locking device can be unlocked by manipulation as described in Test VIII.

Test III. With the panels in the normal position, a concentrated load of 300 pounds (1340 N) shall be applied separately to each vertical pull stile incorporating a locking device, at a point on the stile within 6 inches (150 mm) of the locking device, in the direction parallel to the plan of the glass that would tend to open the door while, simultaneously, an additional concentrated load of 150 pound (670 N) is applied to the same area of the same stile in the direction perpendicular to the plane of the glass toward the exterior side of the door. Remove the load and determine if the locking device can be unlocked by manipulation as described in Test VIII.

Test IV. With the movable panel lifted upward to its full limit within the confines of the door frame (a force of 150 pounds [670 N], plus the weight of the panel, shall be divided equally and applied to the bottom rail within 6 inches (150 mm) of the corners to move panels upward), a concentrated load of 300 pounds (1340 N) shall be applied separately to each vertical pull stile incorporating a locking device, at a point on the stile within 6 inches (150 mm) of the locking device, in the direction parallel to the plane of the glass that would tend to open the door. With the loads applied, determine if the locking device can be unlocked by manipulation as described in Test VIII.

Test V. With the movable panel lifted upward to its full limit within the confines of the door frame as described in Test IV, a concentrated load of 300 pounds (1340 N) shall be appliled separately to each vertical pull stile incorporating a locking device, at a point on the stile within 6 inches (150 mm) of the locking device, in the direction parallel to the plane of the glass that would tend to open the door while, simultaneously, and additional concentrated load of 150 pounds (670 N) is applied to the same area of the same stile in the direction perpendicular to the plane of the glass toward the interior side of the door. With the loads applied, determine if the locking device can be unlocked by manipulation as described in Test VIII.

Test VI. With the movable panel lifted upward to its full limit within the confines of the door panel as described in Test IV, a concentrated load of 300 pounds (1340 N) shall be applied separately to each vertical stile incorporating a locking device, at a point on the stile within 6 inches (150 mm) of the locking device, in the direction parallel to the plane of the glass that would tend to open the door while, simultaneously, and additional concentrated load of 150 pounds (670 N) is applied to the same area of the same stile in the direction perpendicular to the plane of the glass toward the exterior side of the door. With the loads applied, determine if the locking device can be unlocked by manipulation as described in Test VIII.

Test VII. For inside sliding doors, repeat Test V while simultaneously applying a concentrated load of 50 pounds (220 N) at the end of the movable bottom rail near the interlock stiles and inward. For outside sliding doors, repeat Test VI while simultaneously applying a concentrated load of 50 pounds (220 N) at the end of the movable bottom rail near the interlock stiles and outward.

Test VIII. Examine the assembly and determine a method and position for inserting a tool through the door assembly from the outside so as to contact the

locking device or [redacted]e latch. Determine whether it [redacted]s possible to insert or manipulate with any of the manipulation tools described in Section 41.1012 so as to unlock the door. Such assemblies shall resist manipulation for a period of not less than 5 minutes.

Test IX. Repeat Tests I, II and III for fixed panels locating the load point at the midpoint of the stile opposite the meeting stile of the panel under test.

Performance Requirements

Sec. 41.1017. A sliding door assembly shall fail these tests if at any time during or after the test the sliding door assembly does not remain engaged, intact and in the closed and locked position; or if one can enter by manipulating an exposed component or through displaced or damaged portions.

Report

Sec. 41.1018. See Section 41.1009.

DIRECTIONS AND POINTS OF LOAD APPLICATION

FOR TESTING OF HORIZONTAL SLIDING DOORS

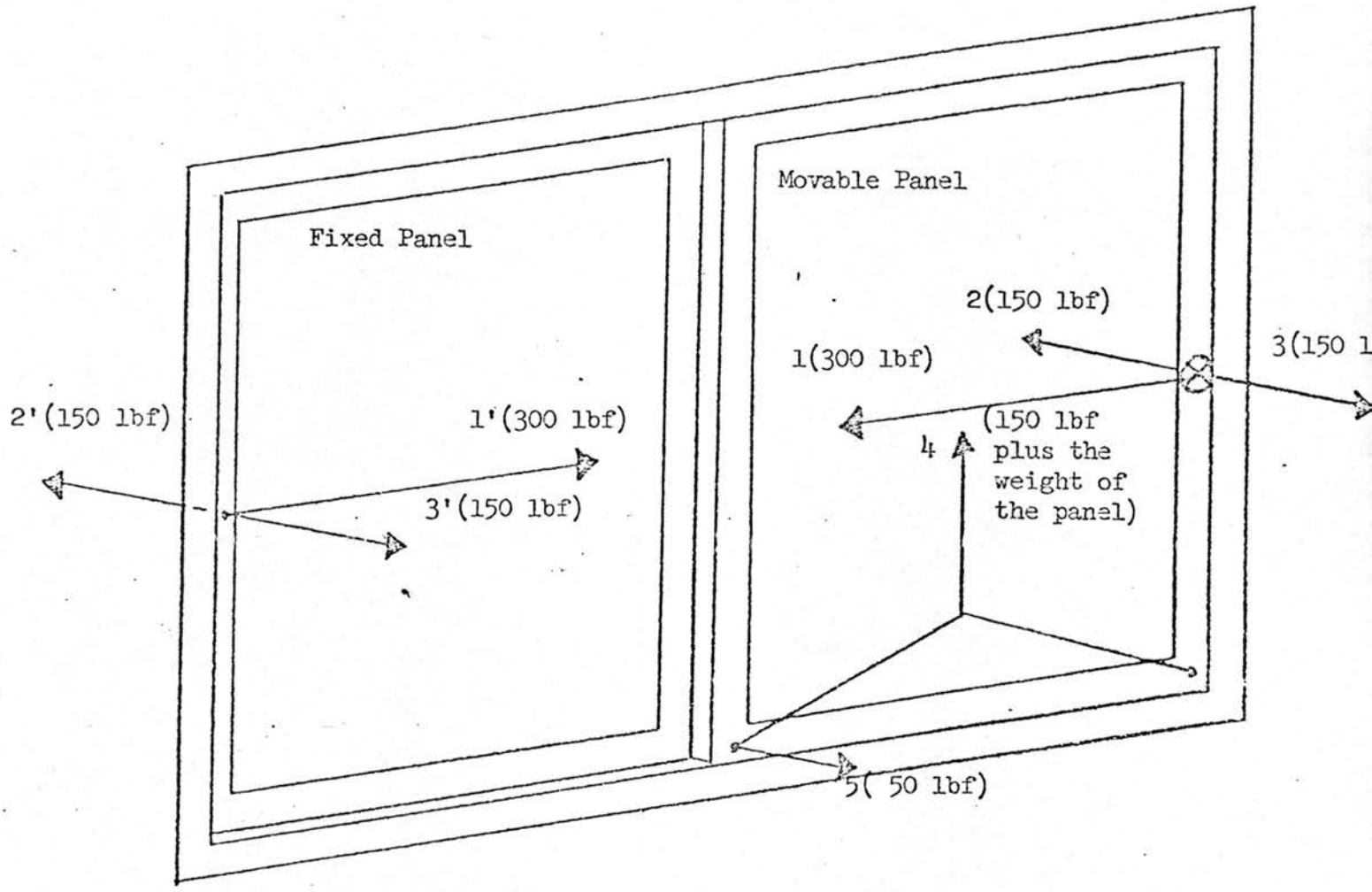

Movable and Fixed Panel Tests:

Test I	Apply load 1
Test II	Apply loads 1 & 2
Test III	Apply loads 1 & 3
Test IV	Apply loads 4 & 1
Test V	Apply loads 4, 1 & 2
Test VI	Apply loads 4, 1 & 3
Test VII	Apply loads 4, 1, 3 & 5
Test VIII	Manipulation Described
Test IX	For fixed panels repeat Tests I, II & III with the load point at the midpoint of the stile opposite the meeting stile of the door panel being tested.

FIGURE 1

STATE BUILDING CODE STANDARD 41-2

TESTS FOR SECURITY OF WINDOW ASEMBLIES

See Section 4107, State Building Code

Scope

Sec. 41.2001. This Standard covers test methods for window assemblies that are required for building security by the Uniform Building Code. For the purpose of this Standard, windows are classified as follows: Type A window assemblies incorporate one or more sashes that open by sliding in the plane of the wall in which the window is installed.

Type B window assemblies incorporate one or more framed sashes which are hinged at or near two corners of the individual sash and open toward the exterior of the wall.

Type C are window assemblies which incorporate one or more sashes which open toward the interior and are hinged at or near two corners of the sash.

Type D are window assemblies which incorporate one or more sashes which are hinged or pivot near the center so that part of the sash opens into the interior wall and part opens toward the exterior.

Definitions

Sec. 41.2002. JAMB--See WINDOW FRAME.

LOCKING DEVICE is a part of a window assembly which is intended to prevent movement of the movable sash, which may be the sash lock or sash operator.

MULLION is a window frame member which meets with and provides structural support to a pair of adjacent sashes at their meeting edges.

MUNTIN is a structural member of a sash which extends either horizontally between the stiles or vertically between the rails to support individual panes of glazing material when the sash incorporates two or more panes.

RAIL is a horizontal member of a sash frame. A meeting rail is one which mates with a rail of another sash or a framing member of the window frame when the sash is in the closed position.

SASH is an assembly of stiles, rails and, sometimes, muntins assembled into a single frame which supports the glazing material. A fixed sash is one which is not intended to be opened. A movable sash is intended to be opened.

SILL is the lowest horizontal member of a window frame.

STILE is a vertical framing member of a sash. A meeting stile is one which mates with a stile of another sash, or a vertical framing member of the window frame when the sash is in the closed position.

WINDOW ASSEMBLY is a unit which includes a window and the anchorage between the window and the wall.

WINDOW FRAME is that part of a window which surounds and supports the sashes and is attached to the surrounding wall. The members include side jambs (vertical), head jamb (upper, horizontal), sill and mullions.

Test Equipment

Sec. 41.2003. Four tension-loading devices capable of delivering and measuring tensile forces of up to 150 lbf (670 N) with an accuracy of $\pm$ 5 percent for each applied load level are required for these tests.

Manipulation tools shall consist of: a knife or spatula with a thin blade approximately 1/32 inch (0.8 mm) thick, not more than 1 inch (25 mm) wide and no longer than 6 inches (150 mm); slotted and phillips type screw drivers not exceeding 10 inches (250 mm) in length; common hand and needle nose pliers not exceeding 8 inches (200 mm) in length; and a piece of stiff steel wire with a diameter of

approximately 1/16 in (1.6 mm) and length of not in excess of 3 feet (900 mm).

Disassembly

Sec. 41.2004. Window assemblies and components shall not include screws, bolts, nails, staples or other mechanical fasteners which are accessible from the exterior and which could be removed by hand or with the aid of manipulation tools as described in Section 41.2003 within a period of 5 minutes thus permitting entry by disassembly.

Samples for Testing

Sec. 41.2005. Specimens shall be representative, and the construction shall be verified by assembly drawings and bill of materials. Complete manufacturer or fabricator installation instructions and full size or accurate scale templates for all items and hardware shall be included.

Sample Preparation

Sec. 41.2006. Following the manufacturer's installation instructions, install the window assembly in a rigid test fixture which simulates the rigidity normally provided to a window assembly in a building. The unit shall be fully glazed. Holes may be drilled in the sash at convenient locations to attach load adapter brackets and the glazing may be taped to prevent possible injury from shattering under load. Loads may be applied from either the interior or exterior side of the window.

Before performing any test, remove from the window assembly all screws, bolts, hing pins, rigid snap glazing beads or other mechanical fasteners which can be removed from the exterior by hand or with the aid of manipulation tools as described in Section 41.2003. Sashes shall be closed and locked.

Tests for Sliding Windows

Sec. 41.2007. Tests for Type A window assemblies shall be performed in the

following order:

Test I. With each sliding sash in the normal position, a concentrated load of 150 pounds (670 N) shall be applied separately to each sash member incorporating a locking device, at a point on a sash member within 6 inches (150 mm) of the locking device, in a direction parallel to the plane of the glass that would tend to openg the window. Remove the load and apply the manipulation test described in Section 41.2010.

Test II. With each sliding sash in the normal position, a concentrated load of 150 pounds (670 N) shall be applied separately to each sash member incorporating a locking device, at a point on a sash member within 6 inches (160 mm) of the locking device, in the direction parallel to the plane of the glass that would tend to open the window while, simultaneously, an additional concentrated load of 75 pounds (340 N) is applied in the same area of the same sash member in the direction perpendicular to the plane of the glass toward the interior side of the window. Remove the load and apply the manipulation test described in Section 41.2010.

Test III. With each sliding sash in the normal position, a concentrated load of 150 pounds (670 N) shall be applied separately to each sash member incorporating a locking device, at a point on the sash member within 6 inches (150 mm) of the locking device, in a direction parallel to the plane of the glass that would tend to open the window while, simultaneously, an additional concentrated load of 75 pounds (340 N) is applied to the same sash member in a direction perpendicular to the plane of the glass toward the exterior side of the window. Remove the load and apply the manipulation test described in Section 41.2010.

Test IV. For horizonal sliding windows, move the sliding sash upward by applying a force of 75 pounds, plus the weight of the sash, divided equally between the lower corners of the sash. For vertical sliding or hung type windows, move the sash toward the side offering the least resistance by applying a force of 75 pounds

(340 N) to the side corners opposite the frame member towards which the window is being moved. Simultaneously, apply a concentrated load of 150 pounds (670 N) to each sash member incorporating a locking device, at a point on the sash withing 6 inches (150 mm) of the locking device, in the direction parallel to the plane of the glass that would tend to open the window. With the assembly under load, apply the manipulation test described in Section 41.2010.

Test V. With the sliding sash moved upward (for horizontal sliding windows) or to the side (for vertical or hung-type windows) within the confines of the window frame as described in Test IV, a concentrated load of 150 pounds (670 N) shall be applied separately to each sash member incorporating a locking device, at a point on the sash within 6 inches (150 mm) of the locking device, in a direction parallel to the plane of the glass that would tend to open the window while, simultaneously, an additional concentrated load of 75 pounds (340 N) is applied to the same area of the same sash in the direction perpendicular to the plane of the glass toward the interior side of the window. With the assembly under load, apply the manipulation test described in Section 41.2010.

Test VI. With the sliding sash moved upward (for horizontal sliding windows) or to the side (for vertical sliding or hung-type windows) within the confines of the window frame as described in Test IV, a concentrated load of 150 pounds (670 N) shall be applied separately to each sash member incorporating a locking device, at a point on the sash member within 6 inches (150 mm) of the locking device, in the direction parallel to the plane of the glass that would tend to open the window while, simultaneously, an additional concentrated load of 75 pounds (340 N) is applied to the same sash member in the direction perpendicular to the plane of the glass toward the exterior side of the window. With the assembly under load, apply the manipulation test described in Section 41.2010.

Test VII. For inside sliding windows, repeat Test V while simultaneously

applying a concentrated load of 25 pounds (110 N) at the end of the movable sash member located opposite the frame member toward which the sash is either moved or lifted and near the corner which is furthest from the locking device; such load shall be applied perpendicular to the sash and toward the interior. For outside sliding windows, repeat Test VI while simultaneously applying a concentrated load of 25 pounds (110 N) located in the same manner as for inside sliding windows, but applied in the opposite direction or toward the exterior.

Test VIII. Repeat Tests I, II and III for fixed sashes, which are part of a Type A window assembly, locating the load point at the midpoint of the stile or rail opposite the meeting stile or rail of the sash under test.

Tests for Hinged Window Assemblies

Sec. 41.2008. Tests for Types B and C window assemblies shall be performed in the following order:

The manipulation test described in Section 41.2010 shall be applied after Tests I and II while the sash is under load and after Test IV with the loads removed.

Test I. With the swinging sash in the normal position, simultaneously apply a concentrated load of 75 pounds (340 N) within 3 inches (75 mm) of each end of the rail or stile which is opposite the hinged side, in the direction perpendicular to the plane of the glass that would tend to open the window.

Test II. Repeat Test I and simultaneously apply a load of 75 pounds (340 N) on the outside within 1 inch (25 mm) of each end of the stile or rail which is opposite the hinge side, in a direction parallel to the plane of the glazing which would tend to disengage the lock. Remove the loads.

Test III. With the swinging sash in the normal position, apply a concentrated load of 150 pounds (670 N) on the rail or stile containing the locking device within 6 inches (150mm) of the lock in a direction perpendicular to the place of the glass that would tend to open the window.

Test IV. Repeat Test III and simultaneously apply a load of 75 pounds (340 N) on the outside within 1 inch (25 mm) of each end of the stile or rail which is opposite the hinge side, in a direction parallel to the plane of the glazing which would tend to disengage the lock.

Tests for Pivoted Window Assemblies

Sec. 41.2009. Tests for Type D window assemblies shall be performed in the following order:

The manipulation test described in Section 41.2010 shall be applied after Tests I and II while the sash is under load and after Test IV with the loads removed.

Sec. 41.2009. Tests for Type D window asemblies shall be performed in the following order:

The manipulation test described in Section 41.2010 shall be applied after Tests I and II while the sash is under load and after Tests III and IV with the loads removed.

Test I. With the sash in the normal position, simultaneously apply a concentrated load of 37.5 pounds (170 N) within 3 inches (75 mm) of both ends of each rail or stile which is perpendicular to the pivot sides in the direction that would tend to open the sash. Remove the loads.

Test II. With the sash in the normal position, apply a concentrated load of 75 pounds (340 N) on a rail or stile containing a pivot within 1 inch (25 mm) of the pivot in a direction parallel to the pivots tending to disengage the pivot under test.

Test III. Repeat Test II, applying the load to the opposite rail or stile. Remove the load.

Test IV. With the sash in the normal position, apply a concentrated load of 150 pounds (670 N) on the rail or stile containing the locking device within 6 inches (75 mm) of the lock in a direction perpendicular to the sash and tending to open the

window.

Test V. Repeat Test IV while simultaneously applying the load specified in Test II. Repeat Test IV while simultaneously applying the load specified in Test III above.

Manipulation of Locking Device

Sec. 41.2010. Examine the assembly and determine a method and position of insertion of a tool through the window assembly from the outside so as to contact the locking device. Determine whether it is possible to insert any of the manipulation tools as described in Section 41.2003 and manipulate with them so as to unlock the window. Such window assemblies shall resist manipulation for a period of not less than 5 minutes.

Performance Requirements

Sec. 41.2011. A window assembly shall fail these tests if at any time during or after the tests the assembly does not remain engaged, intact and in the closed and lock position such as to preclude human entry.

Report

Sec. 41.2012. The test report shall include:

(a) Name and address of the facility or laboratory performing these tests and issuing the report as well as the dates of testing and issuance of the report.

(b) Identification of the sample tested (e.g., name of manufacturer, model and/or series number of product and other information as may be pertinent).

(c) Final assembly drawing(s) components list relative to type, size, location and number of anchors, locking devices and mounting screws used.

(d) Statement indicating that specimen either passed or failed these tests.

(e) Statement that all tests were conducted in accordance with these procedures.

DIRECTIONS AND POINTS OF LOAD APPLICATION

FOR TESTING OF TYPE A WINDOWS

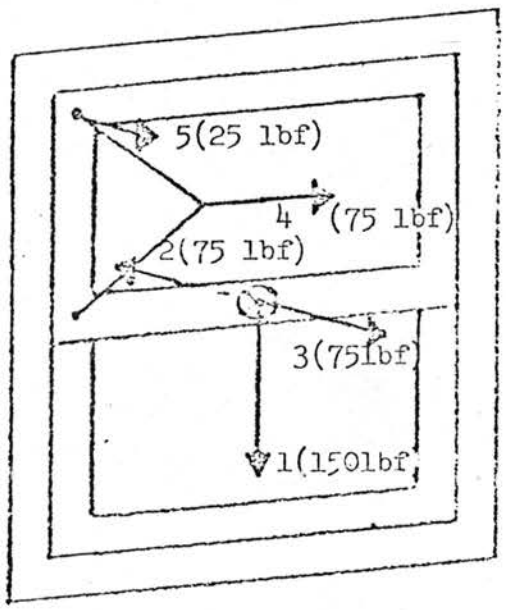

Double Hung

Sliding Sash Tests:

Test I	Apply load 1
Test II	Apply loads 1 & 2
Test III	Apply loads 1 & 3
Test IV	Apply loads 4 & 1
Test V	Apply loads 4, 1 & 2
Test VI	Apply loads 4, 1 & 3
Test VII	Apply loads 4, 1, 3 & 5
Test VIII	For fixed sashes locate the load point at the midpoint of the stile or rail opposite the meeting stile or rail of the sash under test and apply loads as described in Tests I, II & III.

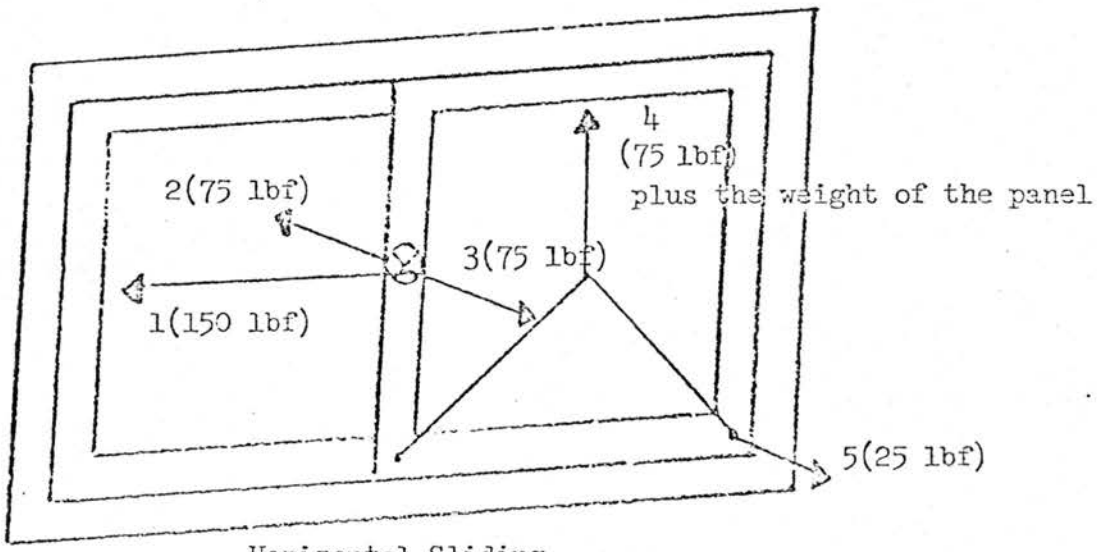

Horizontal Sliding

FIGURE 2

DIRECTIONS AND POINTS OF LOAD APPLICATION

FOR TESTING OF TYPES B AND C WINDOWS

Tests for Hinged Sashes

Test I	Apply load 1's
Test II	Apply load 1's and load 2's
Test III	Apply load 3
Test IV	Apply load 3 and load 2's

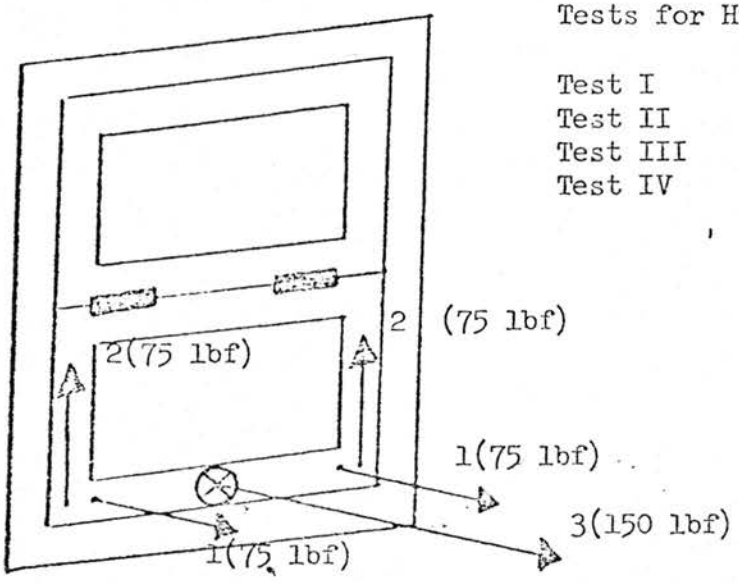

Lower Sash Swings Out
Awning Type

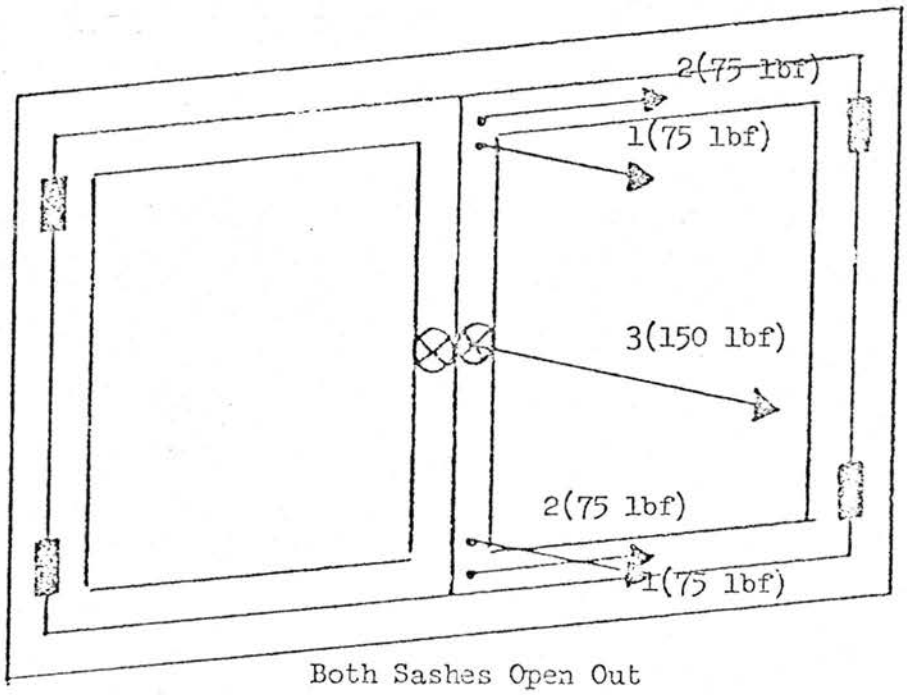

Both Sashes Open Out
Casement Type

FIGURE 3

DIRECTIONS AND POINTS OF LOAD APPLICATION

FOR TESTING OF TYPE D WINDOWS

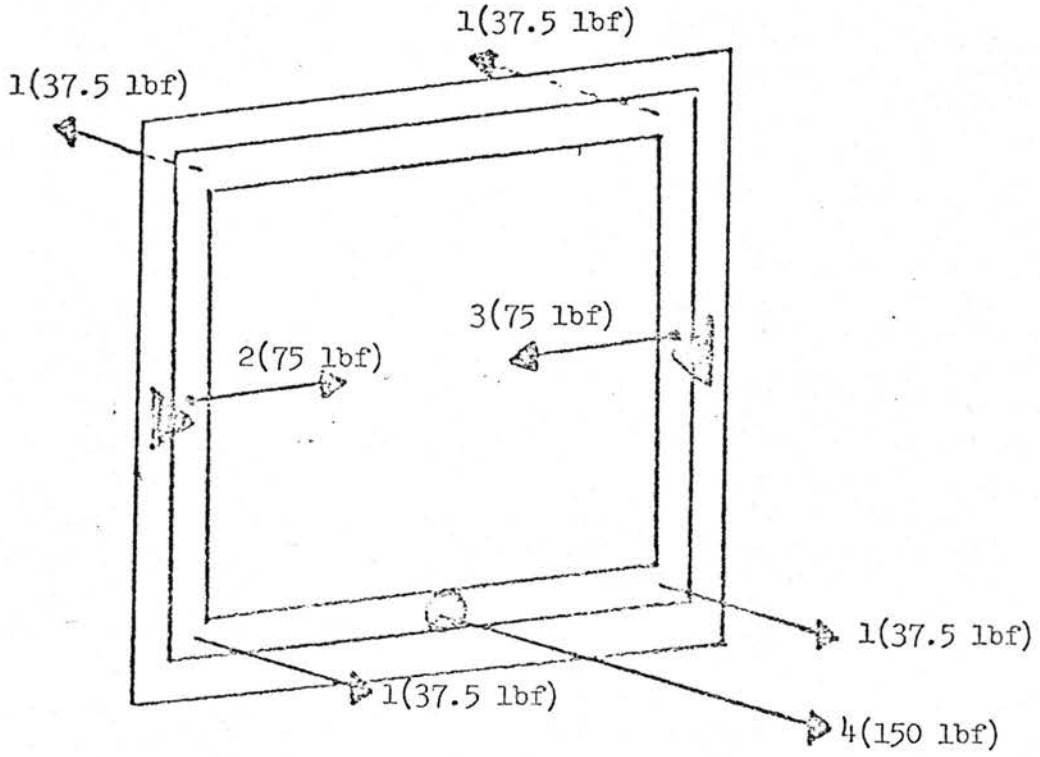

As shown, pivots are represented as triangles and sash pivots out from the bottom and in at the top.

Pivoting Sash Tests:

Test I	Apply load 1's
Test II	Apply load 2
Test III	Apply load 3
Test IV	Apply load 4
Test V	Apply loads 4 & 2, then remove load 2 and apply loads 4 & 3

FIGURE 4

APPROVED AS TO FORM AND LEGALITY
AUG. 21 1978 19____

WARREN SPANNAUS, ATTORNEY GENERAL

BY _____

~~SPECIAL~~ ASSISTANT ATTORNEY GENERAL

STATE OF MINNESOTA
DEPARTMENT OF STATE
FILED
AUG 22 1978
Joan Anderson Growe
Secretary of State
9:23 AM

PROPOSED

ADOPTION OF AMENDMENTS TO THE

STATE BUILDING CODE

Public Hearing
November 28, 1977

State Of Minnesota
Department of Administration
Building Code Division
408 Metro Square Building
7th & Robert Streets
St. Paul, MN 55101

THE COMPOSITION AND USE OF THE

STATE BUILDING CODE

The State Building Code, to be known as the "Code", includes several documents or codes pertaining to buildings. They are as follows:

1. State Building Code regulations known and identified by the prefix "SBC".

2. SBC adopting by reference the following codes:

   (a) [1973] 1976 Edition of the Uniform Building Code, identfied as "UBC";

   (b) 1975 National Electrical Code, identified as "NEC";

   (c) 1971 American National Standard Safety Code for Elevators, Dumbwaiters, Escalators, and Moving Walks, identified as ANSI A17.1-1971 and Supplements ANSI A17.1a-1972, ANSI A17.1b-1973, ANSI A17.1e-1974, ANSI A17.1d-1975, ANSI A17.1e-1975, ANSI A17.1f -1975 and ANSI A17.1g-1976.

   (d) [1973] 1976 Minnesota Plumbing Code, identified as MHD 120 through MHD 135;

   (e) "Flood Proofing Regulations", Office of the Chief Engineers, U.S. Army

3. SBC Minnesota Heating, Ventilating, Air Conditioning and Refrigeration Code, identified as SBC [7601] 7101 through 8505.

4. "Design and Evaluation Criteria for Energy Conservation in New Buildings, Additions and Remodeled Elements of Buildings and Standards for Certain existing Public Buildings," identified as SBC 2MCAR Section 1.16001 through SBC 2MCAR Section 1.16006 . (SBC 6007 through SBC 6013 reserved for future use.)

5. State of Minnesota Mobile Home Installation Standards 1977.

6. Certain appendices which contain the listing of various National Standards referred to in the body of the code; technical requirements for fallout shelters; and various chapters of those codes adopted by reference which chapters may be adopted by municipalities and administered and enforced by such municipalities. The Code is to be used in its entirety by the municipalities in administering and enforcing the Code as well as by designers and builders in their designs and construction of structures. It is necessary to use the entire Code to ensure uniformity in compliance with the Code as well as uniformity in its administration and enforcement.

The above referenced SBC and MHD Codes are available from the Department of Administration Documents Section, 140 Centennial Office Building, St. Paul, Minnesota 55155.

Other codes are available from the publishers of the codes.

(a) Uniform Building Code:

International Conference of Building Officials

5360 South Workman Mill Road

Whittier, California 90601

(b) National Electrical Code:

National Fire Protection Association

470 Atlantic Avenue

Boston, Massachusetts 02110

(c) American National Standard Safety Code for Elevators, Dumbwaiters, Escalators, and Moving Walks:

American Society of Mechanical Engineers
United Engineering Center
345 East 47th Street
New York, New York 10017

(d) ASHRAE Standard 90-75

American Society of Heating, Refrigeration, and Air-Conditioning Engineers Inc.
New York, New York 10017

Each provision of SBC 101 through SBC 111 and 201, 202, 203 and 204 is deleted in its entirety, and the following is adopted in lieu thereof:

Table of Contents

SBC 101 Title

SBC 102 Purpose and Application

SBC 103 Definitions

SBC 104 Scope

SBC 105 Fallout Shelter

SBC 106 State-owned Buildings

SBC 107 Plan Checking Fees

SBC 108 Disclaimer Clause

SBC 109 Appendices

SBC 110 Adoption of Flood Proofing Regulations

SBC 111 Adoption of "Uniform Building Code" by Reference

MINNESOTA STATE BUILDING CODE

SBC 101 TITLE Rules and Regulations.

The rules and regulations contained in this Code and rules and standards adopted by reference therein shall be collectively known as the Minnesota State Building Code, and may be cited as such and will be referred to herein as "this code".

SBC 102 Purpose and Application

The pupose of this Code is to provide uniform standards to safeguard life or limb, health, property and public welfare by regulating and controlling design, construction, quality of materials, use and occupancy of all buildings and structures.

The State Building Code shall apply state-wide and supersede the building code of any municipality. The State Building Code shall not apply to agricultural buildings except with respect to state inspections required or rulemaking authorized.

SBC 103 Definitio

Wherever the term "Administrative Authority" appears in this Code the words "Building Official" shall be substituted therfor.

Wherever the terms "Mayor" or "City Council" appear in this Code the words "Governing Body" shall be substituted therfor.

"City" means a home rule charter or statutory city.

"Municipality" means any city, county, or town.

"Code" means the State Building Code or any amendments thereof.

SBC 104 Scope

The provisions of this Code shall apply to the construction, alteration, moving, demolition, repair and use of any building or structure within the city, except work located primarily in a public way, public utility towers and poles, mechanical equipment not specifically regulated in this Code, and hydraulic flood control structures.

Additions, alterations, repairs and changes of use or occupancy in all buildings and structures shall comply with the provisions for new buildings and structures except as otherwise provided in UBC Sections 104, 306 and 502 of this Code. Where, in any specific case, different sections of this Code specify different materials, methods of construction or other requirements, the most restrictive shall govern.

Wherever in this Code reference is made to the Appendix, the provisions in the Apendix shall not apply unless specifically adopted.

The provisions of this Code relating to fallout shelters shall apply only to state-owned buildings.

SBC 105 Fallout Shelters. Whenever it has been determined by the Department of Public Safety, Division of Civil Defense and the State Architectural Engineer that fall-out protection is needed for a particular location the "Technical Requirements for Fall-Out Shelters" as contained in Appendix "B" shall be complied with.

SBC 106 State-owned Buildings. State owned buildings shall mean all buildings and structures financed in whole or in part by state funds and which are under the exclusive jurisdiction and custodial control of one or more state department or agencies.

SBC 107 State Plan Checking Fees

Plan checking of buildings or structures conducted by the Division shall have a fee based on valuation in accordance with Table No. 111-A. "Valuation" means the total cost of construction exclusive of site work not related to the construction.

There shall be no additional fee charge for consultation with designers, or for re-checking provided no substantial change in the design has been made. When, in the opinion of the Division, a substantial change has been made in the design, the re-checking fee shall be based on a rate of $15.00 per hour or fraction therof. No fee shall be charged for state-owned buildings.

TABLE NO. 111-A

VALUATION	PLAN CHECK FEE
$ 3,000.00 or less	No Charge
3,001.00 to 5,000.00	$ 21.00
5,001.00 to 10,000.00	34.00
10,001.00 to 15,000.00	47.00
15,001.00 to 20,000.00	60.00
20,001.00 to 25,000.00	72.00
25,001.00 to 30,000.00	83.00
30,001.00 to 35,000.00	93.00
35,001.00 to 40,000.00	102.00
40,001.00 to 45,000.00	112.00
45,001.00 to 50,000.00	122.00
50,001.00 to 55,000.00	129.00
55,001.00 to 60,000.00	135.00
60,001.00 to 65,000.00	142.00
65,001.00 to 70,000.00	148.00
70,001.00 to 75,000.00	155.00
75,001.00 to 80,000.00	161.00
80,001.00 to 85,000.00	168.00
85,001.00 to 90,000.00	174.00
90,001.00 to 95,000.00	181.00
95,001.00 to 100,000.00	187.00
100,001.00 to 500,000.00	187.00 for the first $100,000.00 plus $1.00 for each additional $1,000.00 or fraction thereof.
500,001.00 and up	577.00 for the first $500,000.00 plus $.65 for each additional $1,000.00 or fraction thereof.

SBC 108 Disclaimer Clause. The inclusion of specific requirements relative to the manner of installation of any plant or equipment in any one or more parts of said Code shall not limit this procedure to any particular type of installer nor provide a basis upon which determination of the right to perform such procedures shall be made. The authority for such determination will be found in the various licensing ordinances for each type of installer who performs the work.

SBC 109 Appendi[redacted] (a) The following appendices, [redacted]nexes and supplemental material listed in the code shall be mandatory to enforce by any municipality.

1. SBC Appendix A Variation in Snow Loads

2. 1976 UBC Appendix, Chapters 23, 35

3. Minnesota Plumbing Code Appendix B

(b) The following appendices, annexes and supplemental material listed in the Code shall not be mandatory but may be adopted without change at the discretion of any municipality.

1. SBC Appendix B. Abbreviations and addresses of Technical Organizations

2. 1976 UBC Appendix, Chapters 13, 15, 32, 38, 41, 48, 49, 51, 57 and 70.

3. Minnesota Plumbing Code Appedices A, C, D, E and F

4. Flood Proofing Regulations, Sections 201. 2 through 208.2

SBC 110 Adoption of "Flood Proofing Regulations."

Sections 100 through 1406 of the 1972 Edition of "Flood Proofing Regulations" as promulgated by the Office of the Chief Engineers, U.S. Army, Washington, D.C. is incorporated by reference and hereby made a part of the State Building Code subject to the following amendments:

(Sections 201.2 through 208.2 are placed in the appendix of this Code.)

Section 200.2 is amended to read as follows:

Official Flood Plain Zoning Map: The Official Flood Plain Zoning Map showing the extent and boundaries of the Primary and Secondary Flood Hazard Areas is hereby

declared and established as part of these Regulations. Hereinafter reference to the term Primary Flood Hazard Areas in these regulations shall be synonymous with the term "flood plain areas" as used in the Minnesota Regulations NR 85-93.

Section 200.3 is amended to read as follows:

Regulatory

Flood Datum: For the purpose of these regulations, the Regulatory Flood Datum,or as hereinafter referred to as the "RFD", is hereby declared and established for use as the reference datum for determining the elevation above mean sea level to which flood-proofing protection shall be provided. Hereinafter reference to the term "Regulatory Flood Datum" in these regulations shall be synonymous with the term "flood protection elevation" as used in Minnesota Regulations NR 85-93.

Section 201.1 is amended to read as follow:

Application: These regulations shall apply to the construction, alteration, and repair of any building or parts of a building or structure in the Flood Hazard Area(s) of the municipalities. Additions, alterations, repairs and changes of use occupancy shall comply with all provisions for new buildings and structures as otherwise required in the Building Code, except as specifically provided in these Regulations.

Section 201.2 is amended to read as follows:

Nonconforming Use: A structure or the use of a structure or premises which was lawful before the passage or amendment of the ordinance but which is not in conformity with the provisions of these Regulations may be continued subject to the following conditions:

1. No such use shall be expanded, changed, enlarged or altered in a way which

increases its nonconformity.

2. No structural alteration, addition, or repair to any conforming structure over the life of the structure shall exceed 50 percent of its value at the time of its becoming a nonconforming use, unless the structure is permanently changed to a conforming use.

3. If such use is discontinued for 12 consecutive months, any future use of the building premises shall conform to these Regulations. The assessor shall notify the zoning administrator in writing of instances of non-conforming uses which have been discontinued for a period of 12 months.

4. If any nonconforming use or structure is destroyed by any means, including floods, to an extent of 50 percent or more of its assessed value, it shall not be reconstructed except in conformance with the provisions of these Regulations; provided, the Board of Appeals may permit reconstruction if the use or structure is located outside the floodway and is adequately and safely flood-proofed, elevated, or otherwise protected in conformance with these Regulations.

5. Uses or adjuncts thereof which are or become nuisances shall not be entitled to continue as nonconforming uses.

6. Except as provided in "The Building Code," any use which has been permitted as a special exception shall not be deemed a nonconforming use but shall be considered a conforming use.

7. Any alteration, addition, or repair to any nonconforming structure which would result in substantially increasing its flood damage or flood hazard potential shall be protected as required by these Regulations.

8. The Building Official shall maintain a list of nonconforming uses including the date of becoming nonconforming, accessed value at the time of its becoming a nonconforming use, and the nature and extent of nonconformity. This list shall be brought up-to-date annually.

9. The Building Official shall prepare a list of those nonconforming uses which have been flood-proofed or otherwise protected in conformance with these regulations. He shall present such list to the Board of Appeals which may issue a certificate to the owner stating that such uses, as a result of these corrective measures, are in conformance with these Regulations.

Section 203.3 is amended to read as follows:
Records. Copies of such tests, reports, certifications, or the results of such tests shall be kept on file in the office of the Building Official for a period of not less than two (2) years after the approval and acceptance of the completed structure for beneficial occupancy.

Section 204.6 is amended to read as follows:
Board of Appeals: In order to determine the suitablity of alternate materials and methods of construction and to provide reasonable interpretations of the provisions herein, there shall be and is hereby created a Board of Appeals of five (5) members. Each member of the Board shall be a licensed professional architect or engineer, or a builder or superintendent of building construction, with at least ten years experience, for five years of which he shall have been in responsible charge of work.

At no time shall there be more than two members from the same profession. At least one of the members shall be a licensed structural or civil engineer with architectural engineering experience. The Board shall adopt reasonable rules for its investigations and shall render written decisions to the Building Official.

Section 204.7 is amended to read as follows:

Validity: It shall be unlawful for any person, firm or corporation or agency (state or local) to erect, construct, enlarge, alter, repair, move, improve, remove, convert, or demolish, any building or structure in the Flood Hazard Area(s), or cause the same to be done, contrary to or in violation of any of the provisions of these Regulations and/or "The Building Code".

Section 205.1 is amended to read as follows:

Statement of Intention to Improve: The Owner or any registered architect or licensed professional engineer authorized to represent the Owner shall, before preparing final plans for any improvement in the Flood Hazard Area(s), file with the Building Official a Statement of Intention to Improve, including a brief description of the type of improvement being considered and giving its precise location, on a form provided by the Building Official. The Building Official shall note on two copies the elevation of the RFD at the location of the proposed improvement. One copy of the Statement of Intention to Improve shall be retained by the Building Official until a permit copy for improvement on the site is approved or one year has elapsed; a second copy shall be returned to the Owner for his use in final siting and design of his improvement. Assignments of the RFD elevations at all locations shall be made from profiles and/or cross sections provided by the Army Corps of Engineers, SCS, USGS. This information shall be open to public examination at all reasonable times.

Section 205.2 is amended to read as follows:

Permits Required: No person, firm or corporation shall erect, construct, alter, repair, move, remove, convert, or demolish any building or structure or any part therof, or make any other improvement within the structure or any part thereof, or make any other improvement within the Flood Hazard Area(s), or cause same to be done, without first obtaining a separate building flood proofing permit for any such improvement from the Building Official. Ordinary minor repairs may be made with the approval of the Building Official without a permit, provided that such repairs shall not violate any provisions of these Regulations or of "The Building Code".

Section 205.3 No. 2 is amended to read as follows:

Two (2) sets of complete plans and specifications, in addition to plans and specifications required by "The Building Code", except that plans and specifications for any and all proposed improvement in the primary Flood Hazard Area(s) shall be prepared by an engineer or architect licensed by the State to practice as such. All drawings and specifications shall bear the name of the author thereof in his true name, followed by such title as he may be lawfully authorized to use. All plans and sections shall be noted with the proposed flood-proofing class of each space below the RFD including detail drawings of walls and wall openings.

Section 205.3 is amended to read as follows:

Two (2) copies of the Owner's Contingency Plan, which shall describe in detail all procedures for temporary placement and removal or contingent protection proposed items in spaces affected by these Regulations including:

1. Plans and schedules for items to be removed and locations of places above the

RFD to which they will be removed if these contents violate restrictions associated with the flood-proofing class of the space in which they are placed temporarily, including specific organizational responsibilities.

2. Procedures, materials and equipment for protecting items required to have protection by their flood-proofing class, but for which this protection is proposed to be provided contingently, including specific organizational responsibilities for accomplishing this protection.

Waivers of restrictions implicitly requested by submission of the Owner's Contingency Plan may be granted by the Building Official as provided by 1101.2.

Section 209.1 is amended to read as follows:

New Building and Structures: Every building or structure hereafter erected, that is located in the primary Flood Hazard Area(s) where the ground surface is two (2) feet or more below the RFD, or where flood water velocities may exceed five (5) feet per second, shall be provided with an enclosed refuge space above the RFD, of sufficient area to provide for the occupancy load with a minimum of 12 square feet per person. It shall be provided with one or more exits through the exterior walls above the RFD to an exterior platform and stairway not less than three (3) feet wide.

Section 209.3 is amended to read as follows:

Use of Space Below the Regulatory Flood Datum: No floor level or portion of the building or structure that is below the RFD regardless of structure or space classification shall be used for human occupancy, or for storage of any property, materials, or equipment that might constitute a safety hazard when contacted by flood waters.

Section 210.7 is amended to read as follows:

Placard Types: Placards shall be white rigid plastic or other non-water susceptible material eight (8) inches long and twelve (12) inches wide, and shall have printed theron in black letters the information shown in Figure 2.

Section 300.0 is amended by adding a subsection to read as follows:

Section 300.2 Interpretation: For the purpose of these regulations, where definition of terms as set forth in this Chapter conflict in meaning with those as set forth in Minn. Regs. NR 85(c), the latter shall take precedence.

Section 301.2.9 is amended to read as follows:

Habitable Room: A space used for living, sleeping, eating or cooking, or combination thereof, but not including bathrooms, toilet compartments, closets, halls, storage rooms, laundry and utility rooms, cellars and similar spaces.

Section 301.4.1 is amended to read as follows:

Building Code: The State Building Code setting forth standards for theconstruction, addition and modification and repair of buildings and other structures for the purpose of protecting health, safety, and general welfare of the public.

Section 402.1 (Table 2) is amended to read as follows:

General: Table 2 indicates the various degrees of protection required to permituses of spaces for each flood-proofing, the chart in itself shall not be construed as

being exhaustive with respect to all requirements imposed by these Regulations. In disputes arising over the intepretation of this chart, the written provisions of these Regulations shall be considered as definitive.

Table 2
SPACE CLASSIFICATION CHART

FLOOD-PROOFING CLASSIFICATION OF SPACES									
	MINIMUM REQUIREMENTS								
Flood-Proofing Classes	Water-Proofing	Structural Loads	Closure of Openings	Internal Flooding & Drainage	Flooring	Walls and Ceilings	Contents	Electrical	Mechanical
W1 Completely Dry	Type A	Class 1	Type 1	See Chapter 8	Class 1	Class 1	Class 1	See Chapter 12	See Chapter 13
W2 Essentially Dry	Type B	Class 1	Type 2		Class 2	Class 2	Class 2		
W3 Flooded with Potable Water	Type A	Class 2	Type 3		Class 3	Class 3	Class 3		
W4 Flooded with Flood Water	Type C	Class 3	Type 4		Class 4	Class 4	Class 4		
W5 Non-Flood-Proofing	—	—	Type 5		Class 5	Class 5	Class 5		

Section 612.2.1 is amended to read as follows:

Natural Terrain: In addition to the requirements of "The Building Code", the building shall be located not less than fifteen (15) feet back from the line of incidence of the RFD on the ground, foundation design shall take into consideration the effects of soil saturation on the performance of the foundation, the effects of flood waters on slope stability shall be investigated, normal access to the building shall be by direct connections with areas above the RFD and all utility service lines shall be designated and constructed as required to protect the building and/or its components from damage or failure during a flooding event to the RFD.

Section 612.2.2 is amended to read as follows:

Building on Fill: The building and all parts thereof may be constructed above the RFD on an earth fill. Prior to placement of any fill or embankment materials, the area upon which fill is to be placed, including a five-foot strip measured horizontally beyond and contiguous to the toe line of the fill, shall be cleared of standing trees and snags, stumps, brush, down timber, logs and other growth, and all objects including structures on and above the ground surface or partially buried. The area shall be stripped of topsoil and all other material which is considered unsuitable by the Building Official as foundation material. All combustible and noncombustible materials and debris from the clearing, grubbing and stripping operations shall be removed from the proposed fill area and disposed of at locations above the RFD and/or in the manner approved by the Building Official. Fill material shall be of a selected type, preferable granular and free-draining placed in compacted layers. Fill selection and placement shall recognized the effects of saturation from flood waters on slope stability, uniform and differential settlement, and scour potential. The minimum elevation of the top slope for the fill section shall be no more than one foot below the RFD. Minimum distance from any point of the

building perimeter to the top of the fill slope shall be either fifteen (15) feet or twice the depth of fill at that point, whichever is the greater distance. This requirement does not apply to roadways, driveways, playgrounds and other related features which are not integral and functional parts of the building proper. Fill slopes for granular materials shall be not steeper than one vertical on one and one-half horizontal, unless substantiating data justifying steeper slopes are permitted to the Building Official and approved. For slopes exposed to flood velocities of less than five (5) feet per second, grass or vine cover, weeds, bushes and similar vegetation undergrowth will be considered to provide adequate scour protection shall be provided.

Section 802.1 is amended to read as follows:

Applicability: Spaces to be intentionally flooded with flood water (W4) shall be provided with the necessary equipment, devices, piping, controls, etc. necessary for automatic flooding during the flood event and drainage system(s) shall utilize approved piping materials and have sufficient capacity for raising or lowering the internal water level at a rate comparable to the anticipated rate of rise and fall of a flood that would reach the RFD. These pipe systems shall be directly connected to the external flood waters to maintain a balanced internal and external water pressure condition. Provisions shall be made for filling the lower portions of the structure first and for interconnections through or around all floors and partitions to prevent unbalanced filling of chambers or parts within the structures. All spaces below the RFD, shall be provided with air vents extending to at least three (3) feet above the elevation of the RFD to prevent the trapping of air by the rising water surface. All openings to the filling and drainage systems shall be protected by screens for grills to prvent the entry or nesting of rodents or birds in the system.

Section 1301.2.1 is amended to read as follows:

Heating systems utilizing gas or oil fired furnaces shall have a float operated automatic control valve installed in the fuel supply line which shall be set to operate when flood waters reach an elevation equal to the floor level of the space where furnace equipment is installed. A manually operated gate valve that can be operated from a location above the RFD shall be provided in the fuel supply line to serve as a supplementary safety provision for fuel cutoff. The heating equipment and fuel storage tanks shall be mounted on and securely anchored to a foundation pad or pads of sufficient mass to overcome buoyancy and prevent movement that could damage the fuel supply line. As an alternate means of protection, elevation of heating equipment and fuel storage tanks above the RFD on platforms or by suspension from overhead structural systems will be permitted. All unfired pressure vessels will be accorded similar treatment. Fuel lines shall be attached to furnaces by means of flexible or swing type couplings. All heating equipment and fuel storage tanks shall be vented to an elevation of at least three (3) feet above the RFD. Air supply for combustion shall be furnished if required for systems installed in W1 or W2 spaces and piping or duct work for such purposes shall be terminated at least three (3) feet above the RFD.

Section 1302.2.2 is amended to read as follows:

Where the state of dryness of a space is dependent on a sump pump system, or where the stability of a structure during a flood event depends on the relief of up-lift pressures on building components, all interior storm water drainage or seepage, appliance drainage, and underslab drain tile systems shall be directly connected to a sump (pump) and discharged at an elevation at least three (3) feet above the RFD.

Section 1302.2.3.1 is amended to read as follows:

All vents shall extend to an elevation of at least three (3) feet above the RFD.

Section 1302.3 is amended to read as follows:

Sewage Disposal/Treatment. Individual sewage disposal and/or treatment facilities will be permitted in a Flood Hazard Area but only at locations where connection with a public sewer system is not permissible or feasible. Such facilities shall conform to applicable standards, criteria, rules and regulations of the Minnesota Department of Health and Pollution Control Agency in terms of size, construction, use and maintenance and with standards and criteria of the Minnesota Department of Natural Resources regarding setbacks from the normal high water mark of a water-course in accordance with the public water classification. Installations in low swampy areas or areas where the highest known ground water table is within four feet of the bottom of the soil absorption system or which may be subject to recurrent flooding will not be permitted.

Section 1302.3.1 regarding cesspools/sewage disposals has been amended by deleting this section in its entirety.

Section 1302.3.2 regarding seepage pits has been amended by deleting this section in its entirety.

Section 1302.4.1 is amended to read as follows:

Water supply wells, tanks, filters, softeners, heaters, and all appliances located below the RFD shall be protected against contamination by covers, walls, copings, or castings. All vents shall be extended to a minimum elevation of three (3) feet above the RFD.

"FLOOD PROOFING REGULATIONS"

Available from

OFFICE OF THE CHIEF OF ENGINEERS

U.S. ARMY

Washington, D.C. 20234

SBC Adoption of the Uniform Building Code by Reference.

Chapters 1 through 60 and the appendix of the 1976 Edition of the Uniform Building Code, hereinafter "UBC", as promulgated by the International Conference of Building Officials, is incorporated by reference and is hereby made part of the State Building Code (SBC) except as qualified by SBC 109. Said UBC shall be subject to the following alterations and amendments:

UBC 101, 102 and 103 are deleted in their entirety.

UBC 104(j) is amended by adding an additional item number 5 as follows:

5. All approvals must be based on the applicants submission of complete architectural and engineering plans and specifications.

UBC 204 is amended by amending the last sentence as follows: The Board shall adopt reasonable rules and regulations for conducting its investigations and shall render all decisions and findings in writing to the Building Official with a duplicate to the applicant and to the State Building Inspector within fifteen (15) days of such decision.

UBC 303(a) is amended by adding an additional sentence to the first paragraph as follows: The fee schedule of Table 3-A is hereby made optional for use by the local authority and is a recommended schedule. Each municipality must adopt its own schedule of permit fees.

Section 420 of the UBC is amended to read as follows:

UBC 420 Definitions

Supervised Living Facilities

Class A supervised living facilities shall include homes providing boarding and lodging for ambulatory and mobile disabled persons who are capable of semi-independent living with minimum supervision and who are mentally and physically capable of self-preservation under emergency conditions. Physically handicapped persons shall be housed at street level.

Class B supervised living facilties shall include homes providing boarding and lodging for:

1. Mobile disabled persons who are capable of semi-independent living with minimum supervision, but who are not physically capable of self-preservation;

2. Persons with diverse dependencies who require various degrees of supervised guidance and assistance, and who are not mentally or physically capable of self-preservation under emergency conditions.

UBC Table 5-A is amended to read as follows:

UBC 501 Table 5-A

I.1 Nurseries for full time care of children under kindergarten age. Hospitals, sanitariums, nursing homes, and similar buildings (each accomodating five or more persons).

I.2 Boarding care homes, detoxification center, homes for children of

kindergarten age or over, supervised living facilities Class B as defined in UBC 420 (each accomodating five or more persons).

R-1 Hotels and apartment houses. Convents, monasteries (each accomodating more than ten persons). Supervised living facilities Class A as defined in UBC 420 (accomodating five or more persons).

Section 605 of the UBC is amended to read as follows:

UBC 605 Light, Ventilation, and Sanitation. All enclosed portions of Group A, Division 1 Occupancies customarily used by human beings and all dressing rooms shall be provided with natural light by means of exterior glazed openings with an area not less than one-twentieth of the total floor area or shall be provided with artificial light and a mechanically operated ventilating system. The mechanically operated ventilating system shall supply a minimum of five (5) cubic feet per minute of outside air with a total circulated of not less than 15 (fifteen) cubic feet per occupant in all portions of the building and such system shall be kept continuously in operation during such times as the building is occupied. If the velocity of the air at the register exceeds ten (10) feet per second, the register shall be placed more than eight (8) feet above the floor directly beneath.

Lights in all parts of the building customarily used by human beings shall be on a separate circuit from that of the stage and shall be controlled from the box office. All lights in corridors, exit courts and exit passageways shall be protected by a wire cage.

All registers or vents supplying air backstate shall be equipped with automatic closing devices with fusible links. Such closing devices shall be located where the vents or ducts pass through the proscenium walls and

both inside and/or outside of the vent or duct.

There shall be provided in an approved location at least one lavatory for each two (2) water closets for each sex, and at least one (1) drinking fountain for each floor level.

For other requirements on water closets, see UBC 1711.

For additional sanitation facilities requirements, see UBC 1711(h).

Section 802(c) of the UBC is amended to read as follows:

UBC 802(c) Special Provisions. Rooms in Division 1 and 2 Occupancies used for day care purposes, kindergarten pupils and Division 3 Occupancies shall not be located above the first story. Storage and janitor closets shall be of one-hour fire-resistive construction. Stage and enclosed platforms shall be constructed in accordance with Chapter 39. For attic partitions and draft stops see Section 3205.

Section 805 of the UBC is amended to read as follows:

UBC 805 Light, Ventilation, and Sanitation. All portions of Group E Occupancies shall be provided with light and ventilation, either natural or artificial, as specified in UBC 605.

For other requirements on water closets, see UBC 1711.

For additional saniation facilities requirements, see UBC 1711(h)

Section 809 of the UBC is amended to read as follows:

UBC 809 Approved fire alarms shall be provided for All Group E Division 1 and 2 Occupancies with an occupant load of more than 50 persons and in Group E

Division 3 Occupancies with an occupant load of more than 29 persons. In every Group E Occupancy provided with an automatic fire extinguishing or detection system, the operation of such system shall automatically activate the school alarm system.

The fire alarm system shall be installed in compliance with NFPA Standard 72-A-74, "Local Protective Signaling Systems."

An approved fire alarm is a fire alarm and detection system consisting of the following:

1. A complete non-coded continuously sounding until manually reset, electronically supervised type.

2. Shall have sounding stations on 100 foot to 150 foot spacing; (a)in corridors, (b) in areas of high noise levels, such as band rooms, shops, boiler rooms, (c) a weatherproof station on exterior of building facing residential areas.

3. Shall have automatic sending stations (detectors) in boiler rooms, kitchens, shops, painting areas, lounges, laundries, janitor's closets, storerooms, etc., or unsupervised and unoccupied spaces; namely, critical or hazardous areas.

4. Manual sending stations shall be provided in the natural path of escape from fire, near each exit from an area, on each floor, and shall be readily accessible, unobstructed and at visible locations.

Section 901 of the UBC is amended to read as follows:

UBC 901 Division 1. Nurseries for full time care of children under kindergarten

age. Hospitals, sanitariums, nursing homes, and similar buildings) each accomodating five or more persons).

Division 2. Boarding care homes, detoxification centers, homes for children of kindergarten age or over, supervised living facilties. Class B as defined, for the mentally retarded, mentally ill, chemically dependent and the physically handicapped (each accomodating five or more personst.

Section 902(b) Special Provisons. Division 3 Occupancies shall be housed in buildings of Type I or II-F.R. construction.

Every story of a Group I, Division 1 Occupancy accomodating more than five (5) non-ambulatory persons, unless provided with a horizontal exit, shall be divided into not less than two compartments accomodating approximately the same number of non-ambulatory persons in each compartment by smokestop partition meeting the requirements of a one-hour occupancy separation so as to provide an area of refuge within the building.

Corridor openings in the smokestop partition shall be protected with doors as required in Section 3304(h). Other openings shall be limited to ducts which have fire dampers in the plane of the wall activiated by detectors of products of combustion other than heat conforming to Section 4306(b)2.

Rooms occupied by inmates or patients whose personal liberties are restrained, shall have noncombustible floor surfaces.

Section 905 of the UBC is amended to read as follows:

UBC 905 All portions of Group I Occupancies shall be provided with natural light by means of exterior glazed openings with an area equal to one-tenth of the total floor area, and natural ventilation by means of exterior openings with an area not less than one-twentieth of the total floor area or shall be provided with artificial light and a mechnically operated ventilating system as specified in Section 605 and SBC 7720.

For other requirements on water closets, see UBC 1711.

For additional sanitation facilties requirements, see UBC 1711(h).

Section 909 of the UBC is amended to read as follows:

UBC 909 An approved fire alarm system shall be provided for all Group I Occupancies.

Audible alarm devices shall be used in all non-patient areas. Visible alarm devices may be used in lieu of audible devices in patient occupied areas. An approved alarm system shall comply with UBC 809.

Section 1005 of the UBC is amended to read as follows:

UBC 1005 All portions of Group H Occupancies shall be provided with natural light by means of exterior glazed openings with an area equal to one-tenth of the total floor area, and natural ventilation by means of exterior openings with an area not less than one-twentieth of the total floor area or shall be provided with artificial light and a mechanically operated ventilating system as specified in Section 605 and the applicable sections of SBC 7701 through 7736.

In all buildings or portions thereof where flammable liquids are used, exhaust ventilation shall be provided sufficient to produce four complete air changes per hour. Such exhaust ventilation shall be taken from a point at or near the floor level.

In all buildings used for the repair or handling of automobiles operating under their own power, ventilation shall be provided capable of exhausting a minimum of 3/4 cfm per square foot. Additionally, each engine repair stall shall be equipped with an exhaust pipe extension duct, extending to the outside of the building, which, if over 10 feet in length, shall mechanically exhaust 300 cubic feet per minute. Connecting offices and waiting rooms shall be supplied with conditioned air under positive presure.

EXCEPTION: In public repair garages and aircraft hangars not exceeding an area of 5,000 square feet, the Building Official may authorize the omission of such ventilating equipment where, in his opinion, the building is supplied with unobstructed openings to the outer air which are sufficient to provide the necessary ventilation.

Every building or portion thereof where persons are employed shall be provided with at least one water closet. Separate facilities shall be provided for each sex when the number of employees exceeds four (4) and both sexes are employed. Such toilet facilties shall be located either in such building or conveniently in a building adjacent thereto on the same property.

All water closet rooms shall be provided with an exterior window at least 3 square feet in area, fully openable; or a vertical duct not less than 100 square inches in area for the first toilet facility with an additional 50 square inches in area for the first toilet facility with an additional 50 squre inches in area for each additional toilet facility; or a mechanically operated exhaust system which is connected to the light switch, capable of providing a complete change of air every 15 minutes. Such systems shall be vented to the outside air and at the point of discharge shall be at least 5 feet from any openable window.

For other requirements on water closets, see UBC 1711

For additional sanitation facilities requirements, see UBC 1711(h).

Section 1105 of the UBC is amended to read as follows:

UBC 1105 All portions of Group B, Divisions 1, 2 and 3 Occupancies shall be provided with natural light by means of exterior glazed openings with an area equal to one-tenth of the total floor area, and natural ventilation by means of exterior openings with an area not less than one-twentieth of the total floor area or shall be provided with artificial light and a mechanically operated ventilating system as specified in Section 605 and the applicable sections of SBC 7701 through 7736.

In all buildings or portions thereof where flammable liquids are used, exhaust ventilation shall be provided, sufficient to produce four air changes per hour. Such exhaust ventilation shall be taken from a point at or near the floor level.

In all enclosed parking garages, used for storing or handling of automobiles operating under their own power and on all loading platforms in bus terminals, ventilation shall be provided capable of exhausting a minimum of 3/4 cfm per square foot of gross floor area. The Building Official may approve an alternate ventilation system designed to exhaust a minimum of 14,000 cfm for each operating vehicle. Such system shall be based upon the anticipated instantaneous movement rate of vehicles but not less than 2.5 percent (or one vehicle) of the garage capacity. Automatic CO sensing devices may be employed to modulate the ventilation system to maintain a maximum average concentration of CO of 50 ppm during any 8 hour period, with a maximum concentration not greater than 200 ppm for a period not exceeding one hour. Connecting offices, waiting rooms, ticket booths, etc., shall be supplied with conditioned air under positive pressure.

EXCEPTION: In gasoline service stations without lubrication pits, storage garages and aircraft hangars not exceeding an area of 5,000 square feet, the Building Official may authorize the omission of such ventilating equipment where, in his opinion, the building is supplied with unobstructed openings to the outer air which are sufficient to provide the necessary ventilation.

Every building or portion thereof where persons are employed shall be provided with at least one water closet. Separate facilties shall be provided for each sex when the number of employees exceeds four and both

sexes are employed. Such toilet facilities shall be located either in such building or conveniently in a building adjacent thereto on the same property.

Such water closet rooms in connection with food establishments where food is prepared, stored, or served, shall have a nonabsorbent interior finish on floors, walls and ceilings and shall have hand washing facilities therein or adjacent thereto.

All water closet rooms shall be provided with an exterior window at least three square feet in area, fully openable; or a vertical duct not less than 100 square inches in area for the first toilet facility with an additional 50 square inches for each additional toilet facility; or a mechanically operated exhaust system, which is connected to the light swtich, capable of providing a complete change of air every 15 minutes. Such systems shall be vented to the outside air and at the point of discharge shall be at least five feet from any openable window.

For other requirements on water closets, see UBC 1711.

For additional sanitation facilties requirements, see UBC 1711(h).

Section 1109 of the UBC is amended by adding a new paragraph (m):

(m) Every parking ramp or other parking facility shall include spaces for the parking of motor vehicles having a capacity of seven (7) to sixteen (16) persons. Such vehicles shall be classified as commuter vehicles for the transportation of employees to and from their place of employment or to or from a transit stop authorized by a local transit authority. The number of required spaces shall be determined by 2% of the gross designed parking area with a minimum of two spaces.

Such spaces to accomodate commuter vehicles shall be at least 10 feet in width, 20 feet in length and a height clearance of 10'-6" on the entry level and shall not apply to other levels of a ramp.

Section 1205 of the UBC is amended to read as follows:

UBC 1205 Light, Ventilation, and Sanitation. All portions of Group B Division 4 Occupancies customarily used by human beings shall be provided with light and ventilation as specified in UBC 1105.

Every building or portion thereof where persons are employed shall be provided with at least one water closet. Separate facilities shall be provided for each sex when the number of employees exceeds four and both sexes are employed. Such toilet facilities shall be located either in such building or conveniently in a building adjacent thereto on the same property.

For other requiremenents on water closets, see UBC 510 and UBC 1711.

For additional sanitation facilities requirements, see UBC 1711(h).

Section 1301 of the UBC is amended to read as follows:

UBC 1301 Group R Division 1 Occupancies shall be: hotels and apartment houses, convents and monasteries (each accomodating more than ten persons). Supervised living facilities, Class A as defined, for the mentally retarded, mentally ill, chemically dependent, and the physically handicapped (each accommodating five or more persons).

Section 1305(b) of the UBC is amended to read as follows:

UBC 1305(b) Sanitation. Every building shall be provided with at least one water closet. Every hotel and each subdivision thereof where both sexes are accommodated shall be provided with at least two water closets located in such building, which shall be conspicuously marked one for each sex.

Additional water closet shall be provided on each floor for each sex at a rate of one for every additional ten guests, or fractional part thereof, in excess of ten.

Every dwelling unit shall be provided with a kitchen equipped with a kitchen sink and with bathroom facilities consisting of a water closet, lavatory and either a bathtub or shower. Each plumbing fixture shall be equipped with running water necessary for its normal operation.

For other requirements on water closets, see UBC 1711.

For additional sanitation facilities requirements, see UBC 1711(h).

Chapter 13 of the UBC is amended by adding a new section to read as follows:

UBC 1314 Sound Transmission Control. Sound transmission control shall be provided to meet the standards defined in UBC Appendix Chapter 35.

Chapter 13 of the UBC is amended by adding a new section to read as follows:

UBC 1315 Deadbolt Locks Required. All exit doors leading to public areas from all dwelling units and hotel units shall be provided with deadbolt locks, at least one of which must be capable of being locked from the exterior of said unit. For the purpose of this section, a "deadbolt lock" is a locking bolt which, when in the locked position, can only be moved positively by turning a knob, key, or sliding bolt.

Deadbolt locks having a bolt moved by turning a key shall be of the five-pin tumbler type or an approved equivalent. Lock throw shall be not less than three-quarters inch (3/4"). Locks shall meet requirements of UBC 3303(c).

Section 1401 of the Uniform Building Code is amended to read as follows:

Section 1401 add the following paragraph:

Group R, Divison 4 Occupancies: This use group shall include all one and two family dwellings built exclusively by the standards as established in the 1975 One and Two

Family Dwelling Code as promulgated by the national model code organizations.

Section 1405(b) of the UBC is amended to read as follows:

UBC 1405(b) Sanitation. Every dwelling unit shall be provided with a kitchen equipped with a kitchen sink and with bathroom facilities consisting of a water closet, lavatory and either a bathtub or shower. Plumbing fixtures shall be provided with running water necessary for their operation.

For other requirements on water closets, see UBC 510 and 1711.

For additional sanitation facilties requirements, see UBC 1711(h).

UBC 1711(b) of the UBC is amended to read as follows:

UBC 1711(b) Toilet Facilities. Each water closet stool shall be located in a clear space not less than 30 inches in width and have a clear space in front of the water closet stool of not less than 24 inches.

For provisions for the physically handicapped see UBC 5501 through 5508.

Chapter 17 of the UBC is amended by adding a new section to read as follows:

UBC 1711(h) Sanitation Facilities. Sanitation facilties shall be provided for each Occupancy in accordance with Table 17-B and UBC Sections 605, 705, 805, 905, 1005, 1205, 1305 and 1405. Fixtures shall be provided for each sex in accordance with the percentage of occupants of each sex. When the percentage of each sex is not known, one-half for each sex shall be assumed.

OCCUPANCY	USE	S.F. per Occ.	WATER CLOSETS	URINALS
Group A Occupancies ASSEMBLY	Auditoriums	30	Churches: 1 for each 300 Men; 1 for each 300 Women	Churches: 1 for each 300
	Bowling Alleys	30		
	Churches	60		
	Conference Rooms	80		
	Dance Floors	30		
	Dining, Drinking	30		
	Exhibit Rooms	80	Other: Occupants 1-100 → 1; 101-200 → 2; 201-400 → 3; Over 400 → 1 addt'nl/each 500	Other: Occupants 1-200 → 1; 201-400 → 2; 401-750 → 3; Over 750 → 1 addt'nl each 300
	Gymnasiums	30		
	Libraries	100		
	Lodge Rooms	80		
	Lounges	80		
	Rinks	30		
	Stadiums, Grandstands	80		
	Theaters	30		
	Waiting Rooms	80		
Group E Occupancies SCHOOL	Elementary	130	Boys 1/ea. 60; Girls 1/ea. 60	1 for each 30
	Secondary	85	Boys 1/ea. 90; Girls 1/ea. 30	
Group I Occupancies INSTITUTIONAL	Prisons, Jails	100	1 for each cell	
	Hospitals, Nursing Homes	100	1 for each 8 patients; 1 in each waiting rm.	-
			Other: 1 for each 25 men; 1 for each 20 women	Other: 1 for each 50
Group H Occupancies INDUSTRIAL-High Hazard			Factories, Warehouses Occupants → Fixtures: 1-10 → 1; 11-25 → 2; 36-50 → 3; 51-75 → 4; 76-100 → 5; Over 100 → 1 addt'nl for 30	Factories, Warehouses Occupants → Fixtures: 11-30 → 1; 31-80 → 2; 81-160 → 3; 161-240 → 4
Group B Occupancies COMMERCIAL INDUSTRIAL Moderate Hazard	Aircraft Hangers	500		
	Factories	200		
	Municipal Buildings	80		
	Office Buildings	200		
	Sales	200		
	Service Stations	500		
	Storage Garages	500		
	Warehouses	500	Sales, Office, etc. Occupants → Fixtures: 1-15 → 1; 16-35 → 2; 36-55 → 3; 56-80 → 4; 81-110 → 5; 111-150 → 6	Sales, Offices: In lieu of water closets not to exceed one-third
Group B-4 Occupancies COMMERCIAL INDUSTRIAL Low Hazard	Factories	200		
	Sales	200		
	Warehouses	500		
Group R-1 Occupancies RESIDENTIAL, MULTIPLE	Dwelling Units, Apt.	-	1	-
	Motel, Hotel Units	-	1 for each 10	
	Rooming Houses	200	1 for each 10	
	Dormitories	200	1 for each 10	
Group R-3 Occupancies DWELLINGS	1 and 2 Family	-	1	-
Group M Occupancies ACCESSORY	-	-	-	-
TEMPORARY FACILITIES	-	-	1 for each 30	1 for each 30

Footnotes:

(1) Occupant load is computed using the equation: $\frac{A}{\text{S.F. per Occ.}}$ = Occupant Load

(2) Square feet per occupant is only for computing the occupant load to determine the plumbing fixtures required.

(3) Urinals may be furnished in place of water closets at the rate of one urinal for one water closet, but not to exceed one-third of the required water closets.

(4) 1 fixture for each 10 occupants.

(5) 1 fixture for each 15 occupants.

LAVATORIES	DRINKING FOUNTAINS	BATHTUBS OR SHOWERS	KITCHEN SINKS	SERVICE SINKS
Churches 1				
Other Occupants | Fixtures 1-200 | 1 201-400 | 2 401-750 | 3 Over 750 | 1 addt'nl for each 500	1 for each 300	-	-	1
1 for each 60 1 for each 90	1 for each 75	-	-	1 per floor
1 in each cell		1 at each cell block floor		
1 for ea.10 patients	1 for each 100	1 for each 20	-	1 per floor
Other 1 for each 10		Other 1 for each 10		
Factories, Warehouses Occupants | Fixtures for each 1-100 | 1-10 Over 100 | 1-15	Factories-Warehouses 1 for each 75	-	-	1 per floor
Sales, Offices Occupants | Fixtures 1-15 | 1 16-35 | 2 36-60 | 3 61-90 | 4 91-125 | 5 Over 125 | 1 to 45	Sales, Offices 1 for each 150			
1 1 for each 10 1 for each 10 1 for each 10	-	1 1 for each 10 1 for each 10 1 for each 10	1 -	1 laundry tray for each 10 dwelling units or guest rooms
1	-	1	1	-
-	—	-	-	-
-	1 for each 100	-	-	-

A-Area of building occupancy classification served
S.F. - per Occ. - from Column 3 of this table

Sec. 1807. (a) is amended to read as follows:

Special Provisions for Group B, Division 2 Office Buildings and Group R, Division 1 Occupancies.

Sec. 1807.(a) Scope. This Section shall apply to all Group B, Division 2 office buildings and Group R, Division 1 Occupancies each having floors used for human occupancy located more than 75 feet above the lowest level of Fire Department vehicle access. Such buildings shall be provided with either an approved automatic fire-extinguishing system in accordance with Section 1807(c), or safe areas of refuge (compartmentation) in accordance with Section 1807(l).

(b) Certificate of Occupancy. All mechanical and electrical equipment and other required life safety systems shall be approved and installed in accordance with approved plans and specifications pursuant to this Section and shall be tested and proved to be in proper working condition to the satisfaction of the building official before issuance of the Certificate of Occupancy.

(c) Automatic Fire-extinguishing System. When provided as required in Section 1807(a), the automatic fire-extinguishing system shall be provided throughout the building. The sprinkler system shall be designed using the parameters set forth in UBC Standard No. 38-1 and the following:

1. Shutoff valves and a water flow device shall be provided for each floor. The sprinkler riser may be combined with the standpipe riser.
2. In Seismic Zones No. 2, No. 3, and No. 4, in addition to the main water supply a secondary on-site supply of water equal to the hydraulically calculated sprinkler design demand plus 100 gallons per minute additional for the total standpipe system shall be provided. This supply shall be automatically available if the principal supply fails and shall have a duration of 30 minutes.

(d) Smoke Detection Systems. At least one approved smoke detector suitable for the intended use shall be installed in:

1. Every mechanical equipment, electrical, transformer, telephone equipment, elevator machine or similar room.

2. In the main return air or exhaust air plenum of each air-conditioning system and located in a serviceable area downstream of the last duct inlet.

3. At each connection to a vertical duct or riser serving two or more stories from a return air duct or plenum of an air conditioning system. In Group R, Division 1 Occupancies, an approved smoke detector may be used in each return air riser carrying not more than 5000 cfm and serving not more than 10 air inlet openings.

The actuation of any detector required by this Section shall operate the voice alarm system and shall place into operation all equipment necessary to prevent the recirculation of smoke.

(e) Alarm and Communication Systems. The alarm and communication systems shall be so designed and installed that damage to any terminal unit or speaker will not affect the operation of the remainder.

The voice alarm and public address system may be a combined system. When approved, the Fire Department communications system may be combined with the voice alarm system and the public address system.

Three communication systems which may be combined as set forth above shall be provided as follows:

1. Voice alarm system. The operation of any smoke detector, sprinkler, water flow device or manual fire alarm station shall automatically sound an alert signal to the desired areas followed by voice instructions giving appropriate information and direction to the occupants.

The central control station shall contain controls for the voice alarm system so that a selective or general voice alarm may be manually initiated.

The system shall be supervised to cause the activation of an audible trouble signal in the central control station upon interruption or failure of the audiopath including amplifiers, speaker wiring, switches and electrical contracts and shall detect opens, shorts and grounds which might impair the function of the system.

The alarm shall be designed to be heard clearly by all occupants within the building or designated portions thereof as is required for the public address system.

2. Public address system. A public address communication system designed to be clearly heard by all occupants of the building shall operate from the central control station. It shall be established on a selective or general basis to the following terminal areas:

A. Elevators

B. Elevator lobbies

C. Corridors

D. Exit stairways

E. Rooms and tenant spaces exceeding 1000 square feet in area.

F. Dwelling units in apartment houses

G. Hotel guest rooms or suites

3. Fire Department communication system. A two-way Fire Department communication system shall be provided for Fire Department use. It shall operate between the central control Station and every elevator, elevator lobby and entry to every enclosed exit stairway.

(f) Central Control Station. A central control station for Fire Department operations shall be provided in a location aproved by the Fire Department. It shall contain:

1. The voice alarm and public address system panels.

2. The Fire Department communications panel.

3. Fire detection and alarm system annuniciator panels.

4. Status indicator and controls for elevators.

5. Status indicators and controls for air-handling systems.

6. Controls for unlocking all stairway doors simultaneously.

7. Sprinkler valve and water flow detector display panels.

8. Standby power controls and status indicators.

9. A telephone for Fire Department use with controlled access to the public telephone system.

(g) Smoke Control. Natural or mechanical ventilation for the removal of products of combustion shall be provided in every story and shall consist of one of the following:

1. Panels or windows in the exterior walls which can be opened remotely from an approved location other than the fire floor. Such venting facilities shall be provided at the rate of 20 square feet per 50 lineal feet of exterior wall in each story and shall be distributed around the perimeter at not more than 50-foot intervals. Such windows or panels and their controls shall be clearly identified.

EXCEPTION: When a complete automatic fire-extinguishing system is installed, windows or panels manually openable from within the fire floor or approved fixed tempered glass may be used in lieu of the remotely operated openable panels and windows. Such windows shall be clearly identified and shall be of the size and spacing called for in Section 1807(g)1.

2. When a complete and approved automatic fire-extinguishing system is installed, the mechanical air-handling equipment may be designed to accomplish smoke removal. Under fire conditions, the return and exhaust air shall be moved directly to the outside without recirculation to other sections of the building. The air-handling system shall provide a minimum of one exhaust air change each 10 minutes for the area involved.

3. Any other approved design which will produce equivalent results.

(h) Elevators. Elevators and elevator lobbies shall comply with the provisions of Chapter 51 and the following:

NOTE: A bank of elevators is a group of elevators or a single elevator controlled by a common operating system; that is, all those

elevators which respond to a single call button constitute a bank of elevators. There is no limit on the number of cars which may be in a bank or group but there may be not more than four cars within a common hoistway.

1. Except for the main entrance level, all elevators on all floors shall open into elevator lobbies which are separated from the remainder of the building as is required for corridor construction in Section 3304(g) and (h).

2. Each elevator lobby shall be provided with an approved smoke detector located on the lobby ceiling. When the detector is activated, elevator doors shall not open and all cars serving that lobby are to return to the main floor and be under manual control only. If the main floor detector or a transfer floor detector is activated, all cars serving the main floor or transfer floor shall return to a location approved by the Fire Department and building official and be under manual control only. The smoke detector is to operate before the optical density reaches 0.03 per foot. The detector may serve to close the lobby doors.

3. A permanent sign shall be installed in each elevator cab adjacent to the floor status indicator and at each elevator call station on each floor reading "IN FIRE EMERGENCY, DO NOT USE ELEVATOR -- USE EXIT STAIRS," or similar verbiage approved by the building official.

4. Elevator hoistways shall not be vented into an elevator machine room. Cable slots entering th machine room shall be sleeved beneath the machine room floor and extend to not less than 12 inches below the shaft vent to inhibit the passage of smoke into the machine room.

5. At least one elevator car serving all floors shall have a minimum inside car platform of 4 feet 3 inches deep by 6 feet 8 inches wide with a minimum clear opening width of 42 inches, unless otherwise designed and approved to provide equivalent utility to accomodate an ambulance stretcher having a minimum size of 22 inches by 78 inches in its horizontal position. This elevator shall be identified.

(i) Standby Power, Light and Emergency Systems. Standby power, light and emergency systems shall comply with the following:

1. Standby power. A permanently installed on-site power generation system conforming to U.B.C. Standard No. 18-1 shall be provided. All power, lighting, signal and communication facilities provided under the requirements of this Section, including an independent ventilating system for the standby power generator room, shall be transferable to the standby power source.

The electrical power requirements for sizing the standby power generation system shall include but not be limited to the following:

A. Fire protection equipment, including fire pumps.

B. Mechanical ventilation equipment required by this Section including power-operated windows.

C. Elevators designated for Fire Department use and as required by Chapter 51.

D. Standby lighting

E. The normal loads of all facilities classed as emergency. The regular light and power circuits supply ing such facilties are classified as standby systems and shall be automatically transferable to the standby power generation system.

2. Standby lighting. Standby lighting shall include but not be limited to the following:

A. Separate lighting circuits and facilties sufficient to provide light with an intensity not less than one footcandle measured at floor level in all exit corridors, stairways, smokeproof enclosures, elevators, elevator lobbies, and other areas which are clearly part of the escape route.

B. All circuits supplying lighting for the central control station, the standby power generator rooms, and other rooms housing control equipment for mechanical systems required by this Section shall be transferable to the standby power system.

3. Emergency systems. All electrical systems and facilties required by this Section and classified as emergency shall be installed in conformance with U.B.C. Standard 18-1. The following systems and lighting loads are classified as emergency facilties and shall operate within 10 seconds of primary power failure:

A. Exit sign and exit illumination as required by Section 3312.

B. Fire alarm and sprinkler alarm systems.

C. Fire detection systems

D. Elevator car lighting

E. Stairway door control systems

F. Voice communication systems

G. Electrical facilties classified as emergency by any other applicable code or ordinance.

(j) Exits. Exits shall comply with other requirements of this Code and the following:

1. All stairway doors which are to be locked from the stairway side shall have the capability of being unlocked simultaneously without unlatching upon a signal from the central control station.

2. A telephone or other two-way communications systems connected to an approved emergency service which operates continuously shall be provided at not less than every fifth floor in each required stairway where other provisions of this Code permit the doors to be locked.

3. Smokeproof enclosures may be eliminated if all enclosed stairways are pressurized, as provided for mechanically operated smokeproof enclosures, to a minimum of 0.15 and a maximum of 0.50 inch of water column in fully sprinklered buildings.

(k) Seismic Considerations. In Seismic Zones No. 2, No.3 and No. 4, the annchorage of the following mechanical and electrical equipment shall be designed in

accordance with Section 2312.

(l) Areas of Refuge (Compartmentation) Alternate. Areas of refuge conforming to the following may be provided as an alternate to the automatic fire-extinguishing system:

1. Every story shall be divided into two or more areas of approximately the same size with no single area exceeding 15,000 square feet. The wall and door shall be constructed as required for a horizontal exit in Section 3307.

2. Each area of refuge (compartmentation) shall contain one elevator to the main floor and a minimum of one enclosed exit stairway.

3. Openings in exterior walls, where such openings are within 5 feet of each other horizontally on vertically adjacent floors shall be protected by approved flame barriers either extending 30 inches beyond the exterior wall in the plane of the floor or by approved vertical panels not less than 3 feet in height above the floor.

4. Horizontal exit walls used for compartmenting a building shall have a fire-resistance rating of not less than two hours. Duct penetrations of this wall shall not be permitted. Ferrous or copper piping and conduit may penetrate or pass through the wall only if the openings are caulked with impervious noncombustible materials sufficiently tight to prevent the transfer of smoke or combustion gases from one side of the wall to the other and are so maintained. The fire door serving as the horizontal exit between compartments shall be so installed, fitted and gasketed that it will provide a substantial barrier to the passage of smoke.

5. The fire-resistive floor or the floor-ceiling construction shall extend to and be tight against the exterior wall so that the fire-resistive integrity between stories is maintained. No penetrations or other installations which will impair the fire-resistive integrity of the floor or floor-ceiling assembly shall be permitted.

6. A manual fire alarm system (pull boxes) shall be provided.

(m) Automatic Fire-Extinguishing System Alternatives. When a complete approved

automatic fire-extinguishing system complying with this Section is installed in a building, the following modifications of Code requirements are permitted:

1. The fire-resistive time periods set forth in Table No. 17-A may be reduced by one hour for interior bearing walls, exterior bearing and nonbearing walls, roofs and the beams supporting roofs, provided they do not frame into columns. Vertical shafts other than stairway enclosures and elevator shafts may be reduced to one hour when sprinklers are installed within the shafts at alternate floors.

2. Except for corridors in Group B, Division 2 and Group R, Division 1 Occupancies and partitions separating dwelling units or guest rooms, all interior nonbearing partitions required to be one-hour fire-resistive construction by Table No. 17-A may be of noncombustible construction without a fire-resistive time period.

3. Fixed tempered glass may be used in lieu of openable panels for smoke control purposes.

4. Travel distance from the most remote point in the floor area to a horizontal exit or to an enclosed stairway may be 300 feet.

5. The manually operated fire alarm system required in the compartmented building is not required.

6. Smokeproof enclosures are not required but all required stairways shall be pressurized to a minimum of 0.15 inch of water column.

7. Spandrel walls, eyebrows and compartmentation are not required; however, the fire resistance of the floors and juncture of exterior walls with each floor must be maintained.

8. Fire dampers, other than those needed to protect floor-ceiling assemblies to maintain the fire resistance of the assembly, are not required except for those which may be necessary to by-pass smoke to the outside, those provided to convert from recirculated air to 100 percent outside air, and those which may be required to protect the fresh air supply intake against smoke which may be outside the building.

9. Emergency windows required by Section 1304 are not required.

Section 1907 of the UBC is amended to read as follow:

Sec. 1907. Type II-F.R. buildings shall comply with the special provisions on high rise buildings in Section 1807.

EXCEPTION: The reduction provisions for roofs see Sec. 1807(m) Item 1.

Section 2305(d) of the UBC is amended to read as follows:

UBC 2305(d) Snow Loads. Snow loads full or unbalanced shall be considered where such such loading will result in larger members of connections. A basic snow load of 40 pounds per square foot of horizontal projection is required in the following counties: Anoka, Carlton, Carver, Chisago, Cook, Dakota, Hennepin, Isanti, Lake, Pine, Ramsey, St. Louis, Scott and Washington. A basic snow load of 30 pounds per square foot of horizontal projection is required for all other counties not mentioned above. Potential accumulation of snow at valleys, parapets, roof structures, and offsets in roofs of uneven configuration shall be considered. Where snow loads occur, the snow loads shall be determined by the Building Official in accordance with Appendix C.

EXCEPTIONS:

1. The requirements of Appendix C shall not apply to Group R Division 3 and M Occupancies.
2. A basic snow load of 30 pounds per square foot of horizontal projection shall be acceptable for detached Group M, Division 1 Occupancies in all counties.

Snow loads in excess of 20 pounds per square foot may be reduced for each degree of pitch over 20 degrees by R as determined by the following formula:

$$R_S = \frac{S}{40} - \frac{1}{2}$$

where:

R_S = Snow load reduction in pounds per square foot per degree of pitch over 20 degrees.

S = Total snow load in pounds per square foot.

Section 2312(a) of the UBC is amended to read as follows:

UBC 2312(a) General. For the purpose of the Code this State shall be considered to be in Zone "0", No Damage Area. Every building or structure and every portion thereof shall be designed and constructed to resist stresses produced by lateral forces as provided in this Section. Stresses shall be calculated as the effect of a force applied horizontally at each floor or roof level above the foundation. The

force shall be assumed to come from any horizontal direction.

Structural concepts other than set forth in this section may be approved by the Building Official when evidence is submitted showing that equivalent ductility and energy absorption are provided.

Where prescribed wind loads produce higher stresses, such loads shall be used in lieu of the of the loads resulting from earthquake forces.

Section 2907(a) of the UBC is amended to read as follows:

UBC 2907(a) General. Footings and foundations, unless otherwise specifically provided, shall be constructed of masonry or concrete and in all cases extend below the frost line. Footings shall be constructed of solid masonry or concrete. Foundations supporting wood shall extend at least six inches above the adjacent finish grade. Footings shall have a minimum depth below finished grade as indicated in Table 29-A unless another depth is recommended by a foundation investigation.

1. In the absence of a determination by an engineer competent in soil mechanics, the minimum allowable footing depth in feet due to freezing shall be five feet in Zone I and three and one-half feet in Zone II.

Zone I - Shall include the counties of: Aitkin, Becker, Beltrami, Carlton, Cass, Clay, Clearwater, Cook, Crow Wing, Douglas, Grant, Hubbard, Itassca, Kanabec, Kittson, Koochiching, Lake, Lake of the Woods, Mahnomen, Marshall, Mille Lacs, Morrison, Norman, Otter Tail, Pennington, Pine, Polk, Red Lake, Roseau, St. Louis, Todd, Traverse, Wadena, Wilkin.

Zone II - Shall include the counties of: Anoka, Benton, Big Stone,

Blue Earth, Brown, Carver, Chippewa, Chisago, Cottonwood, Dakota, Dodge, Faribault, Fillmore, Freeborn, Goodhue, Hennepin, Houston, Isanti, Jackson, Kandiyohi, Lac Qui Parle, Le Sueur, Lincoln, McLeod, Martin, Meeker, Mower, Murray, Nicollet, Nobles, Olmsted, Pipestone, Pope, Ramsey, Redwood, Renville, Rice, Rock, Scott, Sibley, Sherburne, Stearns, Steele, Stevens, Swift, Wabasha, Waseca, Washington, Watonwan, Winona, Wright, Yellow Medicine. Lesser depths may be permitted when supporting evidence is presented by an engineer competent in soil mechanics.

2. Soil Under Slab on Grade for Accessory Buildings. When soil, natural or fill, is sand or pit run sand and gravel, and of depth in accordance with minimum footings depth requirements for each zone, slab on grade construction which supports roof and wall loads shall be permitted. Slab on grade construction for detached buildings Group M, Division 1 Occupancies may be placed on any soil except peat or muck.

UBC 3205(c) is amended to read as follows:

UBC 3205(c) Ventilation. Where determined necessary by the Building Official due to atmospheric or climatic conditions, enclosed attics and enclosed rafter spaces formed where ceilings are applied direct to the underside of roof rafters, shall have cross ventilation for each separate space by ventilating openings protected against the entrance of rain and snow. The net free ventilating area shall be not less than 1/150 of the area of the space ventilated, except that the area may be 1/300 provided at least 50 percent of the required ventilating area is provided by ventilators located in the upper portion of the space to be ventilated at least 3 feet above eave or cornice vents with the balance of the required ventilation provided by eave or cornice vents.

UBC 3303(a) second paragraph is amended to read as follows:

Buildings as structures used for human occupancy and each dwelling unit or guest room leased for gain shall have at least one door which meets the requirements of subsection (d).

Section 3304(h) of the UBC is amended to read as follows:

UBC 3304(h) Openings. Where corridor walls are required to be of one-hour fire resistive construction by subsection (g) above, every door opening shall be protected by a tight-fitting smoke and draft control door assembly having a fire-protection rating of not less than 20 minutes when tested in accordance with UBC Standard No. 43-2 without the hose stream test. The door and frame shall bear an approved label or other identification showing the rating thereof, the name of the manufacurer, and the identification of the service conducting the inspection of materials and workmanship at the factor during fabrication and assembly. Doors shall be maintained self-closing or shall be automatic closing in accordance with Section 4306(b)2. Other interior openings shall be fixed and protected by approved 1/4 inch thick wired glass installed in steel frames. The total area of all openings, other than doors, in any portion of an interior corridor shall not exceed 25 percent of the area of the corridor wall of the room which it is separating from the corridor. For duct openings, see UBC 4306.

EXCEPTIONS:

1. Protection of openings in the interior walls of exterior exit balconies is not required.

2. In Type I and II-F.R. buildings housing Group B-2 Occupancies, corridor walls may be of approved wired glass set in metal frames. The glass height shall not exceed 2/3 of the width of the corridor. A draft curtain of at least one hour fire-resistive construction and not less than 24 inches in height shall be provided to protect the corridor from the Group B-2 Occupancy area (tenant space). The draft curtain shall be located above the glass and extend a minimum of 24 inches below any finished ceiling in the tenant space. If the finished ceiling is not a fire-rated assembly, the draft curtain shall extend from the wire glass to a rated ceiling or floor assembly. When the B-2 Occupancy area (tenant space) is protected by an approved automatic fire-extinguishing system for a distance of twelve (12) feet in depth adjoining the corridor, and the corridor is not less than twelve (12) feet in width, glass other than wired glass may be approved. Open grille type gates and similar enclosing or security devices may be used in corridor walls of corridors not less than twelve feet in width, when the eintre story is protected by an approved fire-extinguishing system.

In buildings of other than Type I or Type II-F.R. construction, this exception shall not be allowed, unless the entire building is provided with an approved automatic fire-extinguishing system.

Table 33A is amended to read as follows:

Delete the right hand column entitled "Egress by means of a ramp or an elevator must be provided for the physically handicapped as indicated. "

Also delete footnotes 2, 3, 4, 5 and 6.

Section 3318(c) of the UBC is amended to read as follows:

UBC 3318(c) Corridors. The minimum clear width of a corridor shall be 44 inches, except that corridors serving any area housing one or more non-ambulatory persons shall be not less than eight feet in width. There shall be no change of elevation in a corridor serving non-ambulatory persons unless ramps are used.

In Group I, Division 1 Occupancies such as jails, prisons, reformatories and similar buildings with open barred cells forming corridor walls, the corridors and cell doors need not be fire ressitive.

In Group I, Division 1 Occupancies such as jails, prisons, reformatories and similar buildings, doors to corridors used by the inmates need not be maintained self-closing or be automatic closing, may project into the required width of the corridor, but when fully opened shall not reduce the required width by more than seven inches.

Section 3801(c) of the UBC is amended by adding a new definition after the definition of Fire Department Hose Connection and before the definition of Wet Standpipe:

FIRE DEPARTMENT STANDPIPE is a fire line system with a constant water supply and pressure and equipped with Fire Department inlet and outlet connections and installed exclusively for the use of the Fire Department.

Section 3802(b)5 of the UBC is amended to read as follows:

3802(b) In all Group I Occupancies except jails, prisons and reformatories however, the respective increases for area and height specified in UBC 506(c)

and UBC 507 shall be permitted.

EXCEPTIONS:

1. In hospitals of Types I and II F.R. construction, the automatic fire extinguishing system may be omitted from operating rooms, X-ray rooms, delivery rooms, cardiac and intensive care rooms and patient sleeping rooms not exceeding 600 square feet in area when each such room is provided with detectors of products of combustion other than heat, complying with UBC Standard No. 43-6.

2. In hospitals of Type II-1 hour construction, the automatic fire extinguishing system may be omitted from operating rooms, X-ray rooms, delivery rooms, cardiac and intensive care rooms when each such room is provided with detectors of products of combustion other than heat, complying with UBC Standard No. 43-6.

Add new Section 3802(d) of the UBC to read as follows:

3802(d) Special Automatic Fire-Extinguishing Systems. In all Occupancies having commercial cooking equipment (see NFPA no. 96A, 1973), automatic fire extinguishing systems complying with UBC Standard 38-1 or 38-2 shall be installed for protection of duct systems, grease removal devices, hoods and over commerical cooking equipment which may be a source of ignition (such as fat fryers, ranges, griddles and boilers). Systems installed in accordance with the following standards are also permitted.

1. Standards for foam-water sprinkler systems and foam-spray systems, NFPA No. 16-1974.

2. Standard for dry-chemical extinguishing system, NFPA No. 17-1973.

EXCEPTION: These requirements shall not apply to Group R-3 Occupancies.

Section 3803(a) of the UBC is amended to read as follows:

3803(a) General. Fire Department Standpipes shall comply with the requirements of this section and NFPA 14-1974 for Class I standpipes.

UBC 3803(b) Where Required. All buildings three or more stories in height, shall be equipped with one or more Fire Department Standpipes.

UBC 3802(c) Location. There shall be one Fire Department Standpipe outlet connection located at every floor level landing above the first floor of every required enclosed stairway or smokeproof enclosure. Outlets at enclosed stairways shall be located within the enclosure. No point within a building requiring Fire Department Standpipes shall be more than 130 feet travel distance from a Fire Department Standpipe outlet connection.

Portions of Fire Department Standpipe systems not located within an enclosed stairway or smokeproof enclosure shall be protected by a degree of fire resistance equal to that required for vertical enclosures in the building in which they are located.

UBC 3803(d) Detailed Requirements.

1. Construction. Fittings and connections shall be of sufficient strength to withstand 300 pounds per square inch of water pressure when ready for service. All Fire Department Standpipes shall be tested hydrostatically to withstand not less than 200 pounds per square inch of pressure for two hours, but in no case shall the

pressure be less than 5[redacted]ounds per square inch above the[redacted]ximum working pressure.

2. Size. The size of the standpipe shall conform to Chapter 2 of NFPA No. 14-1974 Edition.

3. Fire Department connections. All Fire Department Standpipes shall be equipped with a two-way siamese fire department connection. Fire Department connections shall be interconnected in the system and shall be located on a street front, not less than 18 inches nor more than 4 feet above grade and shall be equipped with an approved straightway check valve and substantial plugs or caps. All Fire Department connections shall be protected against mechanical injury and shall be visible and accessible. More than one fire department connection may be required.

4. Outlets. Each standpipe shall be equipped with an approved 2-1/2 inch outlet not less than 2 feet nor more than 4 feet above the floor level of each story. All Fire Department Standpipes shall be equipped with a two-way, 2-1/2 inch outlet above the roof line of the building when the roof has a pitch of less than 4 inches in 12 inches and installed in a stairway or heated location. All outlets shall be installed so that a 12 inch long wrench may be used in connecting the hose with clearance for the wrench on all sides of the outlet. Standpipes located in smokeproof enclosures shall have outlets located in the vestibule or on the balcony. Standpipe outlets in stairway enclosures or smoke towers shall be so located that the exit doors do not interfere with the use of the outlet. All outlets shall be equipped with an approved valve, cap and chains.

5. Water Supply. The standpipe system shall deliver a water supply as required by Chapter 5, Water Supplies, NFPA No. 14-1974.

Section 3803 has been amended to add a new subsection as follows:

Section 3803(e) Dry Standpipes, when approved by the Fire Chief, may be installed in lieu of Fire Department Standpipes and shall conform to Section 3803 unamended of the UBC 1976 Edition.

Section 3804(b) of the UBC is amended to read as follows:

3804(b) Where Required. Wet standpipes extending from the cellar or basement into the topmost story shall be provided in Group A Division 1, 2 and 2.1 Occupancies with an occupant load exceeding 1,000; in Groups I, H, B and B-4 Occupancies three or more stories in height; and in Groups H and B Occupancies having a floor area exceeding 20,000 square feet per floor.

EXCEPTIONS:

1. Wet standpipes are not required in buildings equipped throughout with an automatic fire-extinguishing system.

2. Wet standpipes are not required in basements or cellars equipped with a complete automatic fire-extinguishing system.

3. Wet standpipes shall not be required in assembly areas used solely for worship.

Sections 5001 though 5006 of the UBC are amended to read as follows:

Sections 5001 through 5006 of the UBC are deleted and replaced by SBC 301 through 337.

Sections 5101 through 5104 of the UBC are amended to read as follows:

Section 5101, 5102, 5103 and 5104 of the UBC, Elevators, Dumbwaiters, Escalators, Manlifts, Moving Walks, Hoists and Lifts are deleted. Refer to SBC 8801.

The UBC is amended by adding a new chapter as follows:

CHAPTER 55

FACILITIES FOR THE HANDICAPPED

UBC 5501 Where Required.

(a) General. In addition to other provisions in this Code, facilities for the handicapped shall be provided in accordance with this chapter. See Chapter 17 for additional requirements.

(b) Scope. Provisions of this chapter shall apply to all buildings except the following:

1. Group R-3 and M Occupancies.

2. Temporary buildings.

3. Buildings not exceeding 150 square feet in floor area need not be provided with sanitation facilities for the handicapped specified in UBC 5503.

4. One story buildings, other than service stations, not exceeding 2,000 square feet in floor area need not be provided with sanitation facilties for the handicapped specified in UBC 5503 when approved by the Building Official.

5. Floors of buildings not used by the general public and on which handicapped persons cannot be employed because of the nature of the work.

6. Group R-1 Occupancies in which dwelling units are individually owned, sanitation facilities for the handicapped specified in UBC 5503 and other facilties for the handicapped specified in UBC 5504, need not be provided.

7. Supervised living facility, Class A. Group H Occupancies for buildings with six (6) or fewer ambulatory residents.

UBC 5502 Building Accessibility

(a) Definitions.

1. Ramp is a sloped walking surface within a building or attached to a building connecting levels of the building and may be part of an exit in accordance with UBC 3306.

2. Walk is a continuous, permanently defined pathway at grade between public ways and buildings, parking areas and buildings, or between buildings.

3. Slip-resistant is any surfacing of a floor, ramp, or walk which has an anti-slip coefficient of not less than 0.40 as defined in Research Paper No. RP-1879 of the National Bureau of Standards.

(b) Site Approaches. Access to building entrances shall be by walks. Such walks shall be of concrete, asphaltic paving or similar permanent materials with slip-resistant surface, and shall be not less than 48 inches wide with a slope not to exceed one vertical to 20 horizontal.

(c) Building Entrances. At least one required exit of the building shall be accessible for use as ingress for the handicapped, and shall be identified for such use. Such building entrance shall be at the main

lobby or corridor, or shall be accessible thereto by ramp or elevator.

(d) Access to Other Stories. Access for the handicapped to other stories or levels of the building used by the general public and/or employees shall be by elevator or ramp, except the following:

1. Group R-1 Occupancies not exceeding three stories in height.

2. Other occupancies not exceeding two stories in height, and where the total occupant load is less than 100 on all floors other than the main floor.

Such ramp shall have a slip-resistant surface. It shall have a slope not to exceed one foot vertical to 12 feet horizontal and a landing at top and bottom, and where the rise exceeds three feet vertically, it shall have an intermediate landing located not to exceed two feet six inches vertically. Bottom landing shall have a minimum dimension of six feet measured in the direction of the ramp, and top and intermediate landings shall have a minimum dimension of five feet measured in the direction of the ramp. Handrails and guardrails shall be provided as required for stairs.

(e) Automobile Parking Areas. Where automobile parking spaces are provided at least one space per 50 spaces or fraction thereof, shall be provided for the use of the handicapped, and shall be identified for such use. Such parking spaces shall be not less than 12 feet in width, and located as near as practicable to the building entrance specified in UBC 5502(c).

(f) Doors and Doorways. Doors and doorways serving buildings or portions

thereof regulated by this chapter shall comply with the following:

1. Doorways or doors in an open position shall have a clear opening width of not less than 31 inches.

2. Doors shall be operable by a single effort with one hand.

3. In doorways consisting of two door leafs, at least one door leaf shall comply with the provisions of this section. See UBC 3303(d) for minimum exit door width.

4. Where access regulated by this chapter is through two or more sets of doors, as in a foyer, vestibule, or lobby, the space separating the doorways shall be not less than seven feet.

5. The floor or landing at doorways shall be level with, or not more than one-half inch lower than the threshold. Where the door swings over floor or landing such floor or landing shall extend not less than one foot beyond the door on the latch side.

6. In dwelling units specified in UBC 5503(a)1, entrances specified in UBC 5502(c), and toilet rooms or compartments specified in UBC 5503(c)1, door opening latch hardware shall have lever handles, and shall be not more than three feet six inches above the floor.

7. Doors serving toilet rooms or stalls shall be capable of being unlocked from either side.

(g) Stair Tread Nosing. Riser shall be slanted to meet the tread nosing edge, or where the tread extends beyond vertical risers, nosing shall be rounded and not project beyond the riser more than one inch.

(h) Aisles and Lanes. Where pedestrian aisles or lanes are defined with directional barriers, rails, benches, merchandise, tables, seats or fences, at least one shall have not less than 31 inches clear width for use of the handicapped and shall be identified for such use.

UBC 5503 Sanitation Facilties. Sanitation facilities may include toilets (water closets), urinals, lavatories, bathtubs, showers, sinks, and similar plumbing fixtures. For number and type of sanitation fixtures required in each occupancy, see Table 17-B.

(a) Where Required.

1. In Group R-1 Occupancies having eight or more dwelling units or guest rooms, sanitation facilties shall be provided in accordance with Table 55-A. In a multiple-building development, the dwelling units or guest rooms containing sanitation facilties shall not be located solely in one building.

2. In other buildings regulated by this chapter, at least one toilet room for each sex shall have not less than one toilet and lavatory complying with this section, and where urinals are provided, not less than one urinal complying with this section. In buildings having more than one toilet room for each sex, not less than two required toilet rooms for each sex shall comply with this section. Toilet rooms having plumbing fixtures required by this section shall be identified for use by the handicapped. Buildings having a posted room directory shall list the location of such toilet rooms in the directory.

(b) Location Other than Group R-1 Apartment Occupancies.

In buildings with an elevator or ramp, the sanitation facilties may be located at any level served by elevator or ramp. Where sanitation facilities are required in buildings without an elevator ramp, the sanitation facilities shall be conveniently located at the required entrance level, accessible without leaving or re-entering the building.

(c) Sizes and Clearances.

1. Toilets. Toilet rooms or compartments shall have not less than 36 inches clear space at the front of the toilet and not less than 36 inches clear width between walls, free of door swing and other obstructions. Toilet seats shall be not less than 17 inches nor more than 20 inches above the floor. Grab bars shall be provided at both sides or one side and rear of the toilet. Such grab bars shall be securely fastened to support a load of not less than 250 pounds. They shall have an outside diameter of one and one half inches and shall have one and one half inches clearance from walls and partitions.

   A. A horizontal grab bar shall be mounted so that the lowest point is ten inches above the toilet seat, and extends not less than six inches in front of the toilet bowl. Grab bar shall be not less than 12 inches long.

   B. A vertical grab bar shall be mounted 12 inches from the front of the toilet bowl extending from 12 inches above the height of the toilet seat to 30 inches above the toilet seat.

2. Urinals. When provided, urinals shall have a clear access width of not less than 31 inches. The front lip of the bowl of wall mounted urinals shall be not more than 18 inches above the floor.

3. Lavatories. Lavatories shall have a clear access width of not less than 31 inches, clear height of not less than 29 inches to the bottom of the fixture apron, clear height of not more than 34 inches to the rim of the fixture, and a clear depth of not less than 12 inches under the fixture exclusive of bowl and waste pipe. The water control valves shall have lever handles.

4. Bathtubs. When provided, and shower is not furnished, the bathtub shall be equipped with a flexible hose hand shower not less than six feet in length, and a vertical height adjustment bar for the shower head of not less than four feet in length. The bathtub shall have a seat, either folding, retractable or fixed, not less than 17 inches nor more than 20 inches above the tub floor and not less than 15 inches deep, and of water-resistive material. Grab bars shall be provided at one side of the bathtub. Such grab bars shall be securely fastened to support a load of not less than 250 pounds. They shall have an outside diameter of one and one half inches and shall have one and one half inches clearance from walls and partitions.

   A. A horizontal grab bar shall be mounted not less than four inches nor more than six inches above the rim of the bathtub. Grab bar shall be not less than 36 inches long.

   B. A vertical grab bar shall be mounted 30 inches from the end

of the tub extending from a height of nine inches to a height of three feet six inches above the rim of the tub.

Water valves shall be single lever control, and shall be accessible from the seat.

5. Showers. When provided, the shower stall shall be accessible for the handicapped with a lip or curb at entry no higher than one half inch above floor of room or stall. The shower stall shall have a seat, either folding, retractable or fixed, not less than 17 inches nor more than 20 inches above the shower floor, and not less than 15 inches deep, and of water-resistive material. Grab bars shall be provided at two sides of the shower compartment. Such grab bars shall be securely fastened to support a load of not less than 250 pounds. They shall have an outside diameter of one and one half inches an shall have one and one half inches clearance from walls and partitions.

   A. A vertical grab bar shall be mounted on the wall opposite the seat extending from a height of three feet to a height of five feet above the floor of the shower.

   B. A horizontal grab bar shall be mounted on the wall adjacent to the seat ten inches above the seat. Grab bar shall be not less than 18 inches long.

   Water valves shall be single lever control and shall be accessible from seat.

6. Kitchen Sinks. When provided, kitchen sinks shall have a clear access width of not less than 31 inches, clear height of not less than 29 inches to the bottom of the fixture apron, clear height of not more than 34 inches to the rim of the fixture, and clear depth of not les sthan 12 inches under the fixture exclusive of bowl and waste pipe. The water control valves shall have lever handles.

UBC 5504 Other Facilities.

(a) Kitchen Facilties. In dwelling units in which sanitation facilties for the handicapped are required, kitchen facilties shall be provided as follows:

1. Space. Clear space of not less than five feet measured between walls, cabinets, appliances, or other obstructions shall be provided. Where cabinets have a base toe space of not less than deep and eight and three fourths inches high, the clear space may be measured from such toe space.

2. Range Controls. Range control handles shall be located at the front or side of the range.

3. Work Space. Work space shall have a clear access width of not less than 31 inches, clear height of not less than 29 inches to the bottom, clear height of not more than 34 inches to the top, and clear depth of not less than 12 inches under the work space. The work space shall have not less than four square feet of area with a minimum dimension of 24 inches. It may be fixed, folding or retractable.

(b) Toilet Room Accessories.

1. Mirror and/or Shelves. Where mirrors and/or shelves are provided, at least one shall be mounted so that the bottom is no higher than 40 inches above the floor.

2. Towel racks, Dispensers, Disposal Units. Where wall-mounted towel racks, dispensers, waste disposal containers or similar appliances are provided, at least one of each shall be mounted so that working height is no higher than 40 inches above the floor, and shall be free of interference by grab bars or other appliances or fixtures.

UBC 5505 Viewing Positions in Assembly Occupancies.

(a) Accessibility. Viewing positions required in this section shall be accessible for the handicapped by walk, ramp, or elvator, or combination thereof, through principle entrance.

(b) Number. Performance viewing positions in assembly occupancies with fixed seating shall be provided in accordance with Table 55-B.

(c) Space Requirements. One of the following shall be provided:

1. Clear spaces free of fixed or portable seats, or with removable fixed seats.

2. Spaces with readily removable portable seats.

(d) Location. Viewing positions shall be located at the main floor.

(e) Floor Surface. Viewing positions shall have level floor surfaces.

UBC 5506 Control and Electrical Switches.

(a) Height. The top of controls for elevator controls, thermostats, manual fire alarms, and similar equipment in all buildings regulated by this chapter and electrical switches and receptacles in dwelling units regulated by this chapter shall be no higher than five feet above the floor.

UBC 5507 Tactile Identification.

(a) Where Required. Spaces normally used by the general public shall have tactile identification, such as raised or recessed letters, labels or plaques. The tactile identification shall not be less than four feet six inches nor more than five feet six inches above the floor, mounted on the wall adjacent to the door of the space identified, on the side nearest the door handle.

(b) Floor Numbers at Elevators. Floor numbers shall be tactily identified for the visually handicapped by raised or recessed numbers attached to the elevator door jamb at each floor, not less than three feet six inches nor more than four feet six inches in height above the floor.

(c) Elevator Controls. Elevator controls shall have tactile identification by raised or recessed letters, labels or plaques.

(d) Door Handles. Doors to stairs other than exit stairs, loading platforms, boiler rooms, stages, and doors serving other hazardous locations shall have knurled or similarly marked door handles.

UBC 5508 Figures. Figures 55-1 through 55-18 of this chapter are illustrative only. See appropriate chapter sections for specific provisions.

Table 55-A

Sanitation Facilities for the Handicapped

Number of Dwelling Units/ Guest Rooms in Building	Number of Dwelling Units/Guest Rooms requiring Sanitation Facilities
0 - 7	0
8 - 39	1
40 - 59	2
60 - 79	3
80 - 99	4
100 - 119	5
120 - 139	6
140 - 159	7
160 - 179	8
180 - 199	9
200 -	10 plus 1 per each 50 units exceeding 200

Table 55-B

Viewing Positions

Motion Picture Auditoriums	
Occupant Load	Minimum Viewing Positions
500 and Less	4
Over 500	8
Other Assembly Occupancies	
500 and Less	4
501 - 1000	12
1001 - 1500	16
Over 1500	16 plus 1 per 500 additional

UBC 5502(e) Automobile Parking Facilities

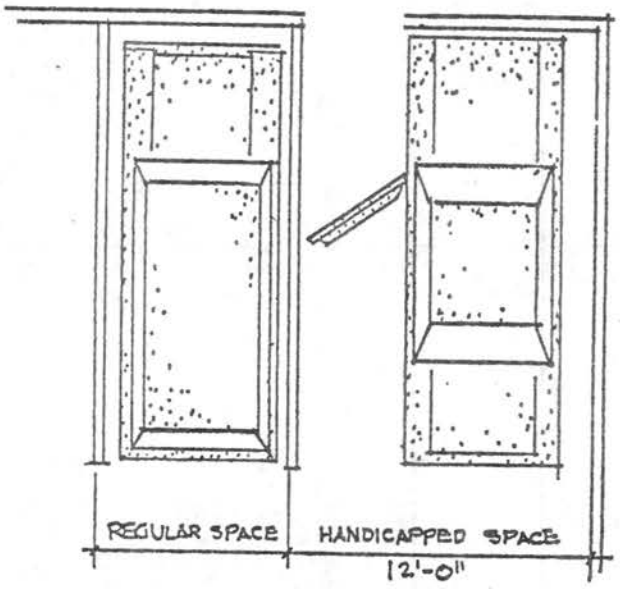

55-1

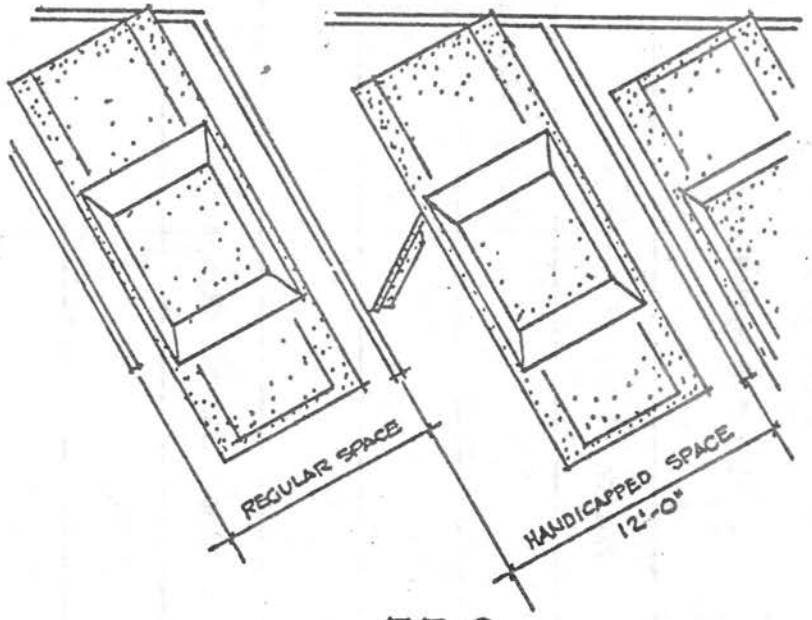

55-2

Drawings not to scale

UBC 5502(e) Automobile Parking Facilities

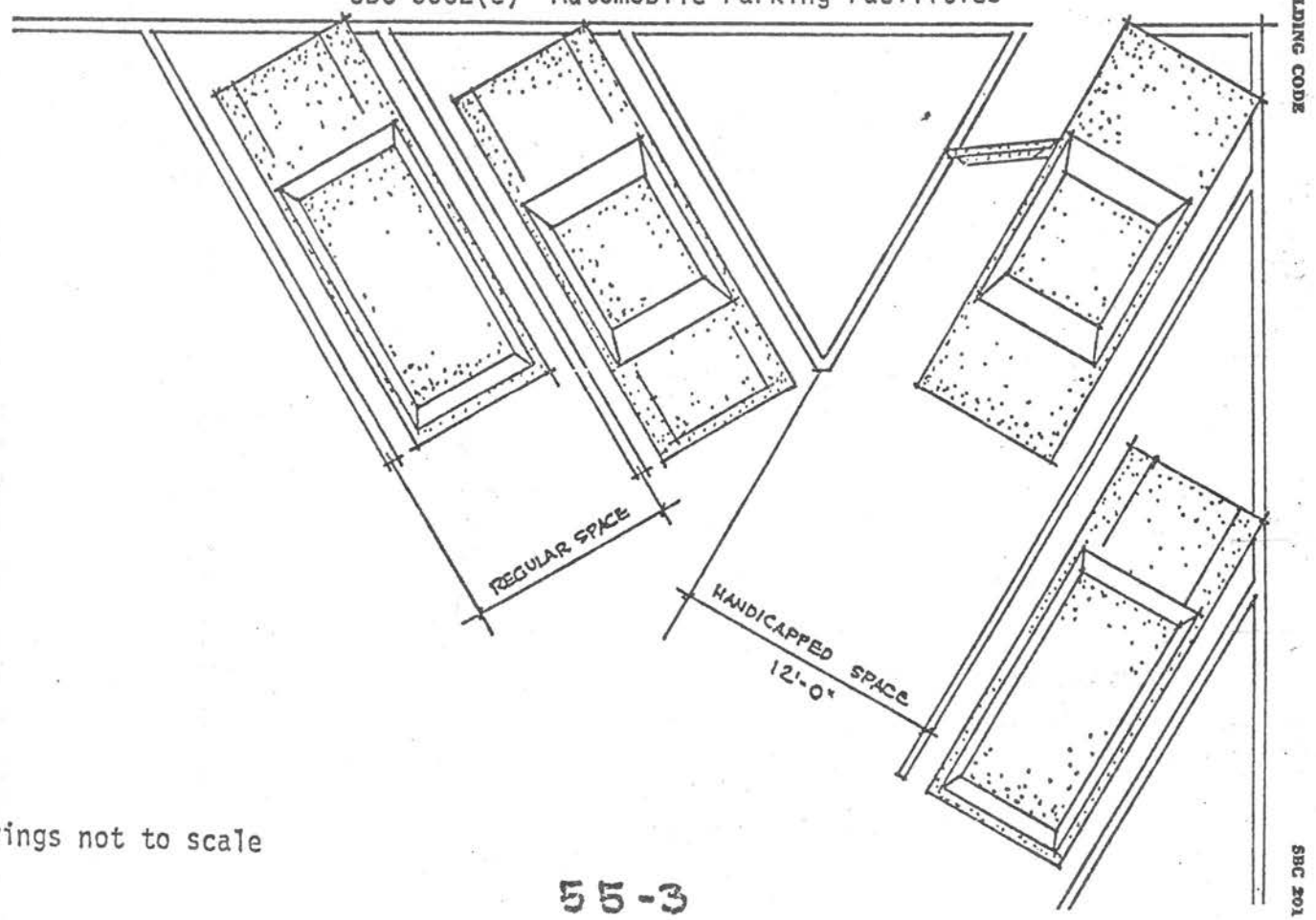

Drawings not to scale

55-3

UBC 5502(f) Doors and Doorways

Drawings not to scale

UBC 5502(g) Stair Tread Nosing

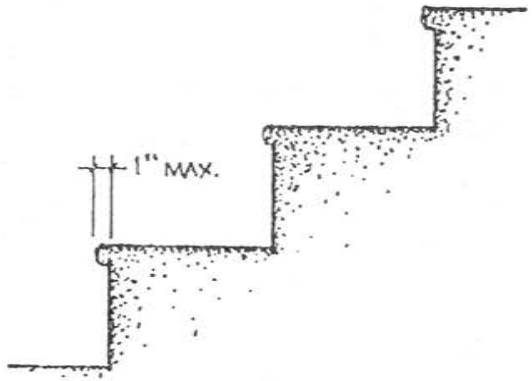

55-7

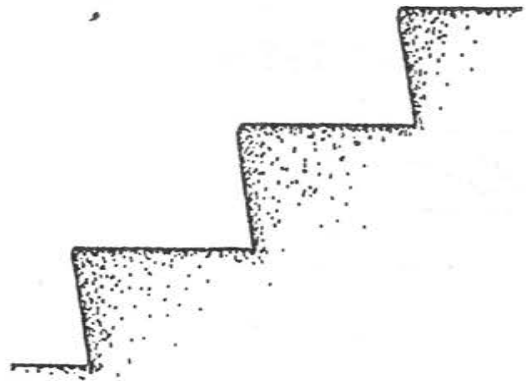

55-8

Drawings not to scale

UBC 5503(c) Sizes and Clearances

Drawings not to scale

UBC 5503(c) Sizes and Clearances

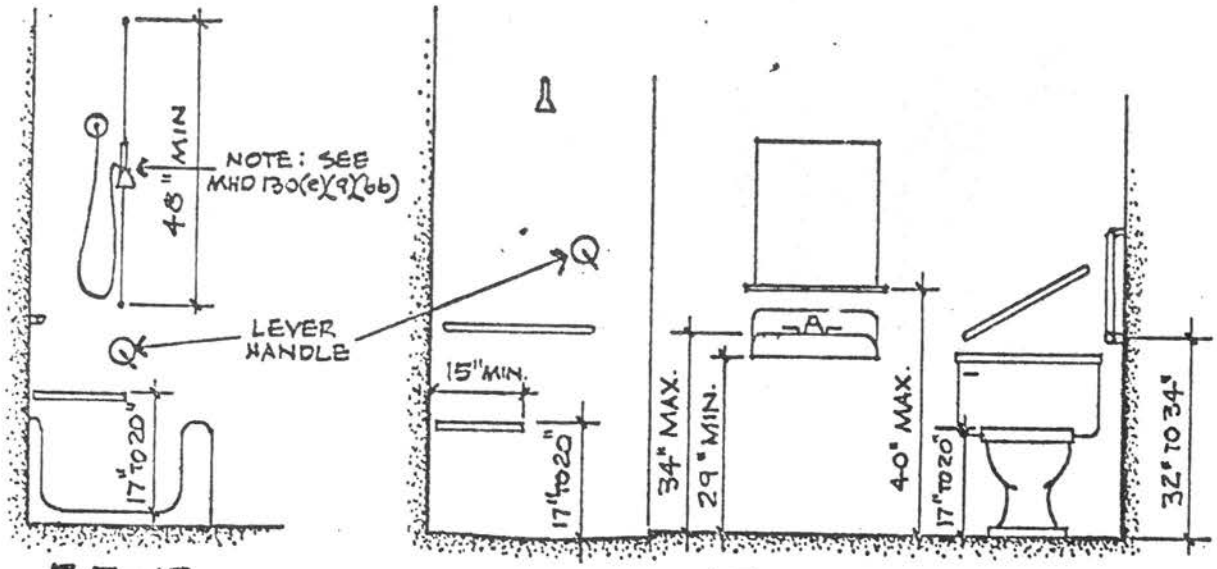

55-13

55-14

Drawings not to scale

UBC 5503(c) Sizes and Clearances

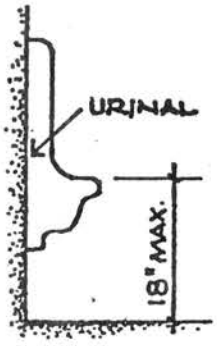

55-15a

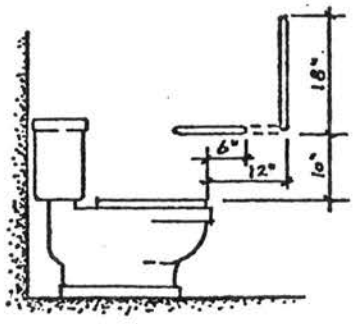

55-15b

Drawings not to scale

UBC 5504(a) Kitchen Facilities

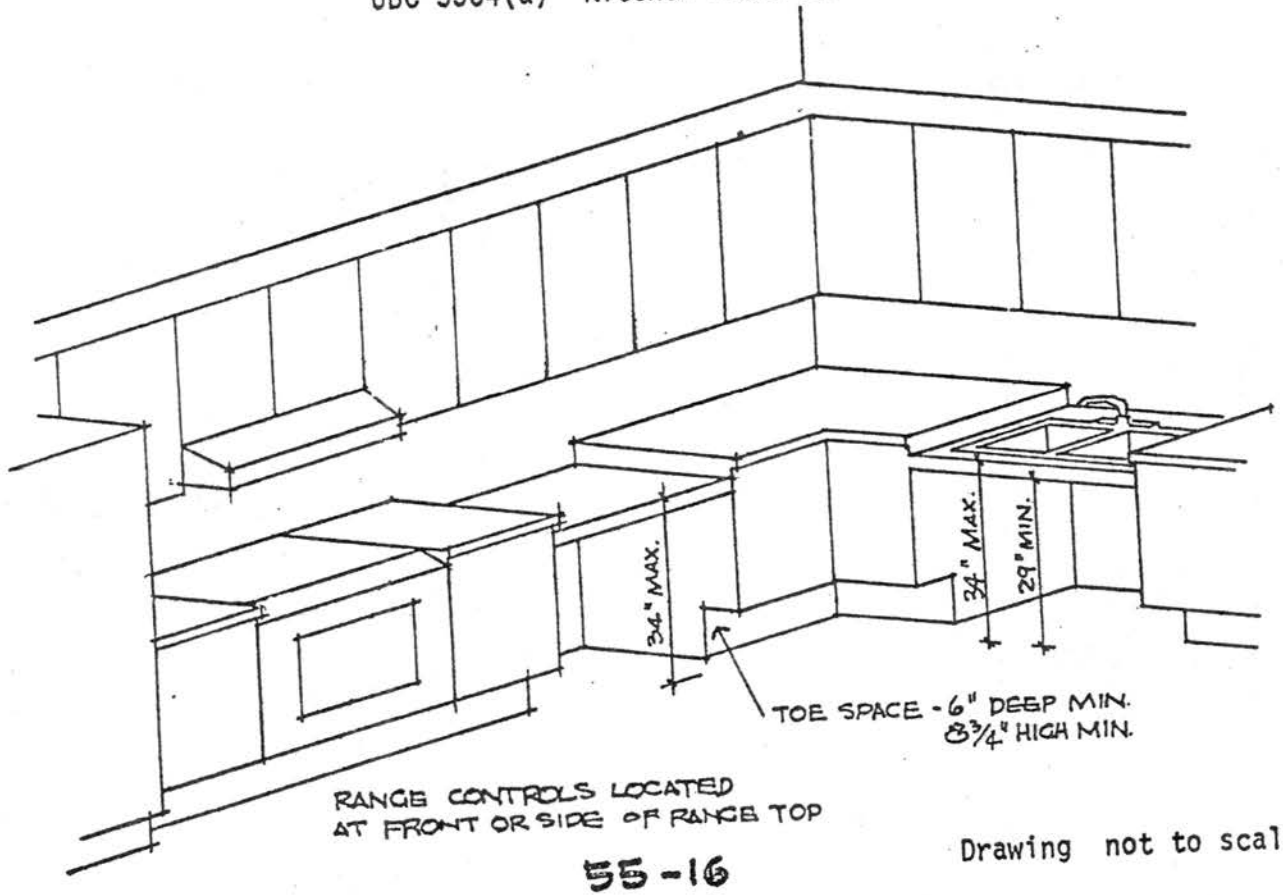

Drawing not to scale

55-16

UBC 5506(b) Elevator Controls

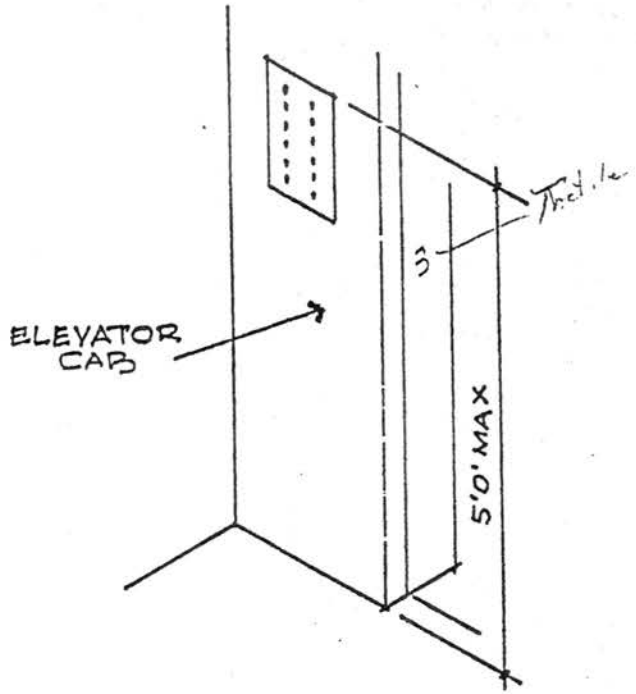

55-17

UBC 5507 Identification

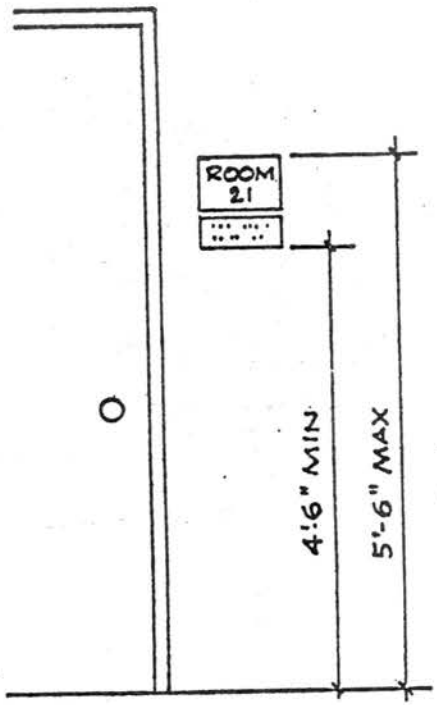

55-18

Drawings not to scale

SBC 8601 Electrical. Scope. All new electrical wiring, apparatus and equipment for electric light, heat and power shall comply with the regulations contained in the 1975 Edition of the National Electrical Code as approved by the American National Standards Institute (ANSI CI-1975) and Minnesota Statutes 326.2453, and the State Building Code as promulgated by the Commissioner of Administration, namely:

1.	UBC[1]	Section 605 (circuit)
2.	UBC	Section 810 (fire alarms)
3.	SBC[2]	Section 201 amending Chapter 5 of UBC Section 512 (G.F.I. Roof Access)]
4.	SBC[2]	Section 201 amending Section 810 of the UBC (fire alarms)
5.	SBC	Section 201 amending 909 of UBC (fire alarms)
6.	UBC	Section 909 (fire alarms)
7.	UBC	Section 1302(b) (fire alarms)
8.	UBC	Section 1310 (fire detection)
9.	UBC	Section 1413 (fire warning system)
10.	UBC	Section 1807(j) (standby power)
11.	UBC	Section 3312 (exit signs and illumination)
12.	UBC	Section 4303[(a)] (b)6 (floor/ceiling system)
13.	UBC	Section 4305(b) (floor/ceiling - roof/ceiling)
14.	SBC	Section 8806-2K. (standby power)
15.	SBC	Section 203 Electrical Requirements within the Flood Plain
16.	SBC	Section 201 Chapter 55 Electrical Requirements for the Physically Handicapped
17.	SBC	Section 6001 through 6006 Electrical Requirements for Energy Conservation

[1] Uniform Building Code

[2] State Building Code

Amend SBC 304 to read as follows:

SBC 304 a. Approval. The State Building Inspector reserves to himself the responsibility for approving manufactured buildings, building systems and compoenents for compliance with the Code. Such responsibility may be delegated by him to approved evaluation agencies.

b. Bi-annual Aproval Renewal. Manufacturers shall submit plans bi-annually for re-evaluation and approval.

c. Approval Expiration. Approvals shall expire when there are revisions to the Code under which the approval was granted. At such time the manufacturer shall:

1. Submit entire new documentation for evaluation and approval or;

2. Submit evidence that the plans as approved are in compliance with the Code as revised.

SBC 314(c) deleted in its entirety.

Amend SBC 326 to read as follows:

SBC 326 Plan Approval Procedures. A plan approval shall be obtained from the State Building Inspector or the evaluation agency for manufactured buildings and systems. Such approvals are mandatory for all closed construction. Approval for open construction is optional to the manufacturer. General requirements:

(a) Applications, plans, specifications and other doucmentation shall be submitted in sufficient copies as required. Plan size shall not exceed 18 inches by 24 inches.

Amend SBC 330 to read as follows:

SBC 330 Required Construction Details. Plans shall provide or show, but not be

limited to, the following details:

(a) General

1. Details and method of installation of manufactured buildings or components to foundations or to each other.

2. All exterior elevations.

3. Cross sections as necessary to identify major building components.

4. Details of flashing, such as at openings and at penetration through roofs. Indicate flashing and gauge to be used.

5. Attic access and attic ventilation.

6. Exterior wall, roof and soffit material as well as finish.

7. Interior wall and ceiling finish material.

8. Fire separation details.

9. Sizes, locations and types of doors and windows.

10. Recommended foundation plans, vents and underfloor access.

11. Evidence of compliance with the Energy Conservation Regulations SBC 6001 through SBC 6006.

Amend SBC 335(d) to read as follows:

(d) Seal Fee [ten dollars (10.00)] Twenty dollars (20.00) per seal. [Replacement seals, one dollar and fifty cents (1.50) per seal.]

The following amendments to the State Building Code have been submitted by

individuals or organizations and are included for consideration as amendments to the Code.

Item 1. Submitted by Sol J. Jacobs, Director of Inspections, City of Minneapolis.

Amend UBC Section 3203(d)3 as follows:

3. Shingle; shake and tile roofs. A. General. Installation shall be in accordance with Table NO. 32-B. Underlayment, when required, shall be lapped horizontally and vertically so as to shed water.

In areas subject to roof ice build-up, underlayment consisting of two layers of Type 15 felt applied shingle fashion shall be installed and solid mopped together with approved cementing material between the plies extending from the eave up the roof to a point 24 inches inside the exterior wall line of the building.

The entire State of Minnesota shall be deemed an area subject to roof ice build-up.

Exception: For wood shingle or wood shake roofs the underlayment shall extend 36 inches inside the exterior wall line of the building.

B. Ashphalt shingles. Asphalt shingles shall be [fastened] applied according to manufacturer's instructions to solidly sheathed roofs but not less than four nails per each strip shingle not more than nominal 36 inches wide and two nails per each individual shingle not more than 18 inches wide shall be used.

Underlayment may be omitted over existing roofs except where the roof slope is less than 4 inches in 12 inches.

The building official may use the application and eave flashing recommendations as set out in the publication published by the Asphalt Roofing

manufacturers Association which is entitled "Manufacture, Selection, and Application of Asphalt Roofing and Siding Products", Twelfth Revised Edition, 1974, as the criteria for approved application as required by Paragraph B, above, and as an acceptable standard for underlayment as required for shingle, shake, and tile roofs. Adequate ventilation is essential in the unheated space directly below the roof so as to prevent condensation; ventilation and air circulation may be provided by louvres of sufficient size properly placed high in gables and/or by installing eaves and roof vents. The net free ventilating area should be not less than 1/150 of the area of the space ventilated, except that the area may be 1/300 provided at least 50 percent of the required ventilating area is provided by ventilators located in the upper portion of the space to be ventilated at least 3 feet above eave or cornice vents with the balance of the required ventilation provided by eave or cornice vents.

Item 2. Submitted by Council on Plumbing Code and Examinations.

Amend UBC Section 3207(c) as follows:

Where roof drains are required, overflow drains having the same size as the roof drains shall be installed with the inlet flow line located 2 inches above the low point of the roof, or overflow scuppers having three times the size of the roof drains may be installed in adjacent parapet walls with the inlet flow line located 2 inches above the low point of the adjacent roof and having aminimum opening height of 4 inches. Overflow drains shall be connected to drain lines independent from the roof drains, and shall discharge above grade.

Item 3. Submitted by Acme Awning, Minneapolis, and Department of Inspections, Minneapolis.

Amend UBC 4506(d) as follows:

(d) Clearances: All portions of any awning shall be at least [8] 7 feet above any public walkway.

Exception: Any valance attached to an awning shall not project above the roof of the awning at the point of attachment. [and shall not extend more than 12 inches below the roof of the awning at the point of attachment, but in no case shall any portion of a valance be less than 7 feet in height above a public way.]

The following are proposed amendments to the Minnesota Plumbing Code, recommended by the Council on Plumbing Codes and Examinations.

Item 1. Amend Table 123(c)(3) III by adding sections 3P and 3Q as follows:

3P Copper Alloy Water Tube 1/2 inch and 3/4 inch ASTM B447

ASTM B-75

3Q Welded Brass Water Tube 1/2 inch and 3/4 inch ASTM B587

Item 2. Amend Table 123(c)(3)V as follows:

50 Bituminized Fiber Drain and Sewer Pipe [D1860]D1861 SSP-1540A.

Item 3. Amend MHD 123(d)(3)(ee) to read as follows:

(ee) Copper tube 3E or 3G with 3N wrought fittings with provisions that it be installed to allow for expansion or contraction and that all stubs through concrete floors must be sleeved or protected by resilient material.

Item 4. Amend 123(d)(3)(ff) as follows:

Copper Tube 3H with 3N fittings except that this material may not be buried under or embedded in a concrete slab.

Item 5. Amend Table 123(c)(e) III 3J to read as follows:

3J Seamless copper tube, Type M hard and soft temper H23-1 B88

Item 6. Amend MHD 123(d)(e)(gg) to read as follows:

Copper 3J, 3Ja, 3Jb [or 3G] 3P or 3Q with 3N fittings may be installed exposed or in frame partitions, or in tunnels and shafts, except that this material may not be laid underground or imbedded in masonry or concrete.

Item 7. Amend MHD 123(d)(4)(cc) as follows:

Asbestos cement 5A and 5C and fittings laid on a continuous granular bed. [and only in yard area.]

Item 8. Amend MHD 123(d)(4)(ff) as follows:

Concrete 5N and 5M and fittings.

Item 9. Amend MHD 123(d)(4)(gg) as follows:

Plastic 6A, 6B, 6C(1) and 6C(2) laid on a granular bed. [in yard areas]

Item 10. Amend MHD 123(d)(6)(bb) as follows:

Concrete 5N and 5M fittings

Item 11. Amend MHD 123(d)(14) Special Materials by adding a new section (gg) to read as follows:

(gg) Plastic Tubular Traps, Plastic (ABS and PVC) Tube and Tubular Fittings for Waste Connections. All tubular fittings must comply with the requirements of ASTM Standard F409.

Item 12. Delete Table 127(b)(1).

Item 13. Amend MHD 127(b) to read as follows:

(b) Required [Recommended] Minimum of Fixtures

(1) Plumbing fixtures [should] shall be provided for the type of building occupancy and in the minimum number shown in Table 17-B of the Uniform Building Code

[127(b)(1) Minimum Number of Plumbing Fixtures].

Types of building occupancy not shown, or special construction will be considered individually by the Administrative Authority.

Item 14. Amend Table 131(a)(2)A by adding footnote as follows:

No building sewer shall be less than 4 inches in diameter.

Item 15. Amend MHD 132(d)(2) as follows:

(2) Waterproof Flashings and Frost Closure. Each vent terminal shall be made watertight with the roof by proper flashing of copper, lead, glavanized iron, or other approved flashings or flashing materials. Vent pipes which pass through the roof shall be at least 2 inches in diameter.[and shall be encased in a frost proof jacket so arranged and installed that there will be an air space of at least 1 inch between the outside of the pipe and the inside surface of the frost jacket. The frost jacket shall extend from a point below the roof boards to the terminal of the vent it serves. The jacket below the roof boards shall be left open to allow warm air to enter, while the joint with the vent, above the roof, shall be made so as to be watertight and to minimize the loss of air. The jacket shall be so constructed that settling of the building or vent pipe will not destroy the joints nor the jacket.] When approved by the Administrative Authority, other materials or methods may be used which provide adequate protection.

Item 16. Amend MHD 133(g)(1) by adding a new section (bb) to read as follows:

(bb) Overflow Drains. For overflow drains refer to Section 3207(c) of the Uniform Building Code.

Item 17. Submitted by MG Coupling Company, 12353 Wilshire Blvd., Los Angeles, CA, recommended for approval by the Council on Plumbing Codes and Examinations.

Amend MHD 124(a)(2)(11-4) as follows:

(11-4) Mechanical Joints in Hubless Cast Iron Soil Pipe. Mechanical joints for hubless cast iron soil pipe and fittings [shall] may be made by using a neoprene sleeve and stainless steel retaining band as specified in CISPI standard 301, or

Mechanical joints for hubless cast iron soil pipe and fittings may be made by using a coupling consisting of the housing fabricated in two parts of grey-cast iron castings in accordance with ASTM A.48. The coupling gasket shall be molded neoprene rubber per ASTM C564. Coupling bolts and nuts shall be made of 18-8 stainless steel.

The following amendments to MHD 123(9)(ff), MHD 123(11)(hh), and MHD 124(11)(mm) have been submitted for public hearing by S. D. McCullough, Representative, Genova-Minnesota, Minneapolis, MN. They are recommended by the Council on Plumbing Codes and Examinations.

Item 1. (FF) Plastic 6A or 6B with corresponding fittings may be installed except that[no stack or] horizontal drain may exceed 35 feet in total length without an Approved expansion and contraction joint or offset to be installed at each 35 feet of uninterrupted length.

Item 2. (hh) Plastic 6A and 6B with corresponding fittings may be installed except that no[stack or] horizontal vent may exceed 35 feet in total length without an approved expansion and contraction joint or offset to be installed at each 35 feet of uninterrupted length.

Item 3. (mm) Plastic joints. Every joint in plastic piping shall be made with approved fittings by either solvent welded or fusion welded connections or with approved insert fittings and metal calmps and screws of corrosion resistant material or threaded joints according to accepted standards. All solvent materials must meet approved recognized standards. Expansion and contraction joints conforming to ASTM-2665 and ASTM 2661.

The following are proposed amendments to the Minnesota Building Code. Recommended by the Elevator Code Sub committee.

Item 1. Amend SBC 8806 as follows:

Elevators, Dumbwaiters, Escalators and Moving Walks

1. The eighth edition of American National Safety Code for Elevators, Dumbwaiters Escalators and Moving Walks - ANSI A17.1-97 including supplements ANSI A17.1a-1972, ANSI A17.1b-1973, as amended herein, ANSI A17.1e-1974, ANSI A17.1d-1975, ANSI A17.1e-1975 and ANSI A17.1f-1975, are herby incorporated by reference and made a part of this Code. All references in ANSI A17.1-1971 and supplements to the National Electrical Code ANSI C1-1968 and ANSI C1-1971 shall be changed to read: "National Electrical Code" ANSI C1[1971] 1975 (NFPA 70[-1971]-1975.

Item 2. SBC 8806-2-I is amended as follows:

SBC 8806-2-I. IN each elevator lobby served by elevators complying with rule 211.3 of the supplement to the Elevator Code identified as ANSI A17.1b - 1973, all automatic-operation elevators serving three or more [landings] stories above or below the main floor or having a travel of twenty five (25) feet or more above or below the main floor, at least one elevator car serving all floors in a building shall have a platform size that is standard for the elevator supplier, and capable of accomodating an ambulance stretcher in its horizontal position. The opening to the elevator car shall be capable of passageway for such ambulance stretcher. [Such elevator shall be provided for Fire Department emergency access to all floors and shall be so identified.]

Item 3. Amend rule 100.4a to read as follows:

100.4a Vents required

Hoistways of elevators serving more than three (3) floors shall be provided with means of venting smoke and hot gases to the outer air in case of fire. Vents may be manually openable or remote control automatic vents.

Exceptions:

Hoistways not extending into the top floor of the building, in buildings other than hotels, apartment houses, hospitals and similar buildings with overnight sleeping quarters, where the hoistways are equipped with approved automatic sprinklers connected to the building water-supply system or to an approved automatic sprinkler system (See NFPA No. 13-[1969]1975 Sprinkler System).

Such systems shall be responsive to an accumulation of smoke as well as heat at the top of the hoistway.

Item 4. Amend rule 100.4b to read as follows:

100.4b Location of Vents

Vents shall be located:

1. In the side or top of the hoistway enclosure or directly below the floor or floors at the top of the hoistway, and shall open either directly to the outer air or through noncombustible ducts to the outer air; or

2. In the wall or roof of the pent-house or overhead machinery space above the roof, provided that openings have a total area not less than the minimum specified in Rule 100.4c and vents passing through machine rooms must be in

noncombustible ducts.

When a hatch is installed in the roof of the hoistway, a protective grill shall be provided to prevent persons from falling into hoistway.

Item 5. Amend Rule 204.2a 2 as follows:

204.2a 2.

Slow burning combustible materials for insulating, sound deadening or decorative purposes may be used for lining enclosures if firmly bonded flat to the enclosure. Such materials shall not be padded.[or tufted] Materials used must have a Class I flame spread rating.

Item 6. Amend SBC section 8806-9(g) as follows:

SBC 8806-9(g) One (1) car in each bank of automatic-operation elevators serving [three(3)] five (5) or more [landings] floors above or below the main floor [or having a travel distance of twenty five (25) feet or more] shall be provided with emergency sevice controls as specified in Rule 211.3a of this supplement.

Item 7. Amend rule 211.3a-4 of ANSI A17.1b-1973 as follows:

Rule 211.3a-4

A two [three] position (off, and on, [and by pass]) key-operated switch shall be provided in or adjacent to an operating panel in each card and it shall be effective when the main floor key-operated switch (see 211.3a-1) is in the "on" position or a sensor has been activated and the car has returned to the main floor or other approved level. The key shall be removable only in the "off" position and when in the "on" postion, it shall place the elevator on emergency [service] operation. [The switch shall be maintained in the bypass position by continuous pressure and

when maintained in this position, shall by pass the car door electric contact and hoistway door interlocks and shall permit travel only toward the main floor or other approved level.]

Item 8. Amend SBC 8806-2 K to read as follows:

SBC 8806-2K

Standby power. In every building over one story and more than 75 feet in height, emergency power shall be provided for at least one passenger elevator in each bank. This emergency power shall be [automatically] transferable to any other elevator in the bank and shall be capable of operating the elevator with a full load at contract speed or not less than 150 feet per minute. Emergency power shall be provided by an approved self-contained generator set to operate whenever there is a loss of power in the normal power supply. The generator shall be in a separate room having at least a one-hour fire resistive occupancy separation from the remainder of the building and shall have an on site fuel supply adequate to operate the equipment for two hours. See UBC Standards 18-1.

Item 9. Amend SBC 8806 J to read as follows:

Exterior elevator call buttons shall be placed not higher than [42] 60 inches above the floor. No emergency stop switch, door opening and door closing buttons, or elevator floor buttons shall be placed higher than [48] 60 inches above the floor.

The UBC is amended by adding a new appendix Chapter 32 which reads as follows:

CHAPTER 32

RE-ROOFING

General.

Section 3209. All re-roofing shall conform to the applicable provisions of Chapter 32 of this Code.

Roofing materials and methods of application shall comply with Uniform Building Code Standards or shall follow the manufacturer's installation requirements when approved by the Building Official.

Inspections

Section 3210. New roof coverings shall not be applied without first obtaining an inspection and written approval from the building offical. A final inspection and approval shall be obtained from the building official when the re-roofing is complete.

Built-up Roofs

Section 3211. (a) General. Built-up roof covering shall be completely removed before applying the new roof covering.

EXCEPTION: The building official may allow existing roof coverings to remain when inspection reveals that:

1. The structural design is sufficient to sustain the weight of an additional roof.

2. There is not more than one existing roof on the structure

3. The existing roof is securely attached to the deck

4. The roof deck is not rotted and is structurally sound.

5. Existing insulation is not water soaked.

(b) Preparation of Roof and Application of New Covering. When conditions specified in subsection (a) above have been met, the re-roofing shall be accomplished as follows:

1. Gravel surfaced. The roof shall be cleaned of all loose gravel and debris. All blisters shall be cut and made smooth. One-half inch insulation board shall be nailed or cemented to the existing roofing with coal tar pitch applied at the rate of 40 pounds per square foot over which a new roof complying with Section 3203 shall be installed; or, all existing gravel shall be removed to provide a smooth surface. All blisters shall be cut and cemented or nailed smooth. A base sheet as defined in the Code shall be nailed in place. The base sheet shall not be mopped to the old roofing. New roofing conforming to Section 3203 shall be aplied.

2. Smooth or cap-sheet surfaced. All blisters and curled edges shall be cut and cemented or nailed smooth. A base sheet shall be nailed or, in the case of nonnailable decks, mopped to the existing roofing. New roofing conforming to Section 3203 shall be applied.

3. Flashing and edgings. Vent flashings, metal edgings, drain outlets, metal counterflashing and collars shall be removed and cleaned. Rusted metal shall be replaced. Metal shall be primed with cutback primer prior to installation. Collars and flanges shall be flashed per the roofing manufacturer's instructions.

4. Intersecting walls. All concrete and masonry walls shall be completely cleaned and primed to receive new flashing. All vertical walls, other than concrete or masonry, shall have the surface finish material removed to a height of 6 inches above the deck to receive new roofing and flashing. All rotted wood shall be replaced with new materials. Surface finish material shall be replaced to match original construction.

5. Cant strips. Where space permits, cant strips shall be installed at all angles. All angels shall be flashed with at least two more layers than in the new roof with an exposed finish layer of asbestos felt or mineral surfaced cap-sheet.

Shingles and Shakes

Section 3312. Based upon inspection of the existing roofing, the building official may permit a re-cover in accordance with the following provisions:

1. Asphalt shingle application. Not more than two overlays of asphalt shingles shall be applied over an existing asphalt shingle roof.

Not more than two overlays of asphalt shingle roofing shall be applied over wood shingles. Asphalt shingles applied over wood shingles shall have an overlay of not less than Type 30 nonperforated felt.

2. Wood shake application. Not more than one overlay of wood shakes shall be applied over an existing asphalt shingle or wood shingle roof (with one layer of 18-inch, 30 pound felt interlaced between each layer of shakes.)

3. Wood shingle application. Not more than one overlay of wood shingles shall be applied over existing wood shingles.

4. Application over shakes. New roof covering shall not be applied over an existing shake roof.

5. Flashing and edgings. Rusted or damaged flashing, vent caps and metal edgings shall be replaced with new materials as necessary.

Action:

Add a new appendix chapter to the Minnesota State Building Code (SBC) to be listed in SBC 110(a).2 and have the effect of being adopted without change at the discretion of any municipality.

Chapter 41

BUILDING SECURITY

Purpose

Sec. 4101. The purpose of this Chapter is to provide minimum standards of design, construction and quality of materials for all applicable buildings to safeguard life, property and the public welfare from the perils of burglary and other unlawful trespasses.

Scope

Sec. 4102. The provisions of this Chapter shall apply to all accessible openings into dwelling units or guest rooms of Groups H (R-1), I (R-3) and (R-4) occupancies.

Limitations

Sec. 4103. Building security methods which will create a hazard to life by obstructing any means of egress or any opening which could be used as an emergency exiting facility shall be prohibited.

The provisions of this Chapter shall not supersede the safety requirements relative to latching or locking devices on exit doors which would be contary to the

provisions of Chapter 33 nor shall the provisions of this Chapter be construed to waive any other provisions of this code.

Definitions

Sec. 4104. For the purposes of this Chapter, certain terms are defined as follows:

ACCESSIBLE OPENING is any opening, or part thereof, in a wall defining the perimeter of a dwelling unit or guest room, which is located within 12 feet (3.63 m) vertically or 6 feet (1.83 m) horizontally of any surface or building appendage which would tend to supply access to said opening from either ground level or adjacent occupancies or structures. This definition also includes openings leading from breezeways, porches or garage areas into dwelling units.

SWINGING DOOR ASSEMBLY is a unit composed of a group of parts or components that make up a closure for a passageway through a wall. For the purposes of this chapter, a door assembly consists of the following parts: door, hinges, locking device or devices, operation contacts (such as handles, knobs, push plates), miscellaneous hardware and closers, the frame, including the head and jambs plus the anchorage devices to the surrounding wall.

HORIZONTAL SLIDING DOOR ASSEMBLY forms a closure for a passageway through a wall and consists of a frame, one or more operative panels that slide (roll) horizontally within the frame and ancillary hardware such as rollers and locking devices. Such asemblies may also contain fixed panels which are fastened to the frame and/or to the wall in which the frame is installed.

WINDOW ASSEMBLY is a unit composed of a group of parts or components that make up a closure for an opening in a wall to control light, air and other elements, and

which normally includes: glazed sash, hinges or pivots, sash lock, sash operator, window frame, miscellaneous hardware and the anchorage between the window and the wall.

For additional definitions, see UBC Standards No. 41-1 and No. 41-2.

Swinging Doors

Sec. 4105. (a) General. All accessible prime swinging door assemblies shall be designed, constructed and installed so that, when the the locked position they shall not permit entry when subjected to the forces shown in Table 41-A and tested in accordance with UBC Standard No. 41-1 Part A.

(b) Entry Vision. All entry doors to dwelling units or guest rooms shall be arranged so that the occupant has a view of the area immediately outside the door without opening the door. Such view may be provided through approved view ports or glazed openings when provided in compliance with UBC Chapter 33 and Sections 4105(i) and 4107 of this Chapter.

(c) Frames/Jambs. Door jambs shall be installed with solid backing in such a manner that no voids exist between the strike jamb and the frame opening for a vertical distance of 6 inches (150 mm) each side of the strike.

1. Hollow metal frames shall be filled with concrete or similar noncrushable subtance on the strike side of the frame.
2. In wood framing, horizontal blocking shall be placed between studs at door lock height for 2 stud spaces each side of the door opening. Trimmers shall be full length from the header to the floor with solid backing against sole plates.
3. Jambs for inswinging doors shall have the stop and jamb of one piece or

equivalent construction.

(d) Hinges. Hinges for outswinging doors shall be equipped with nonremovable hinge pins or a mechanical interlock to preclude removal of the door from the exterior by removing the hinge pins. In wood framing, door frames shall be shimmed behind the hinges and such hinges shall be mounted with a minimum of 2 No. 8 size screws, or equivalent, penetrating at least 2 inches (5cm) into solid backing beyond the surface to which the hinge is attached.

(e) Bolts and Latches. A minimum of one deadlocking bolt and one deadlocking latch, or equivalent, shall be provided for all accessible single swinging doors. Such bolts shall have minimum projections of 1 inch (25 mm) and such latches shall have minimum projections of 1/2 inch (12 mm).

1. Pairs of swinging doors shall have the inactive leaf secured by vertical throw bolts with a minimum projection of 1/2 inch (12 mm), or equivalent, and the active leaf shall be subject to the same provisions as for single swinging doors.

Exception: Doors connecting directly between dwelling units or guest rooms shall be equipped with a minimum of one deadlocking bolt which shall be key operated from both sides or equivalent.

(f) Strikes. Metal strikes shall be required for all locking devices and shall have a minimum thickness of .062 inches (1.5 mm). In wood framing, such strikes shall be mounted with a minimum of 2 No. 8 size screws, or equivalent, penetrating at least 2 inches (5 cm) into solid backing beyond the surface to which the strike is attached.

1. Strikes used for dead latches shall not allow the dead-latch plunger to enter the strike hole with the latch after installation.

(g) Lock Activating Devices. Lock cylinders shall be so designed or protected as to preclude disassembly from the exterior by twisting, prying, pulling or other manipulation.

1. When key-in-knob locksets are constructed such that the deadbolt and dead latch are mechanically interconnected, such locksets shall be so designed or protected that the lock cannot be compromised by wrenching the knob from the exterior or knocking the knob off to gain access to the locking means and manipulating the bolt and latch by hand or with the aid of a screwdriver to gain access.

(h) Keying Requirements. Keyed locks, other than master keyed locks, shall have a minimum of 5 tumblers or be of such design as to provide a minimum of 10,000 possible interchange-free combinations. Master-keyed locks shall provide a minimum of 1,000 interchange-free combinations.

1. A system of construction keying must be provided which will insure that the use of construction keys will be precluded after occupancy by a new tenant or resident.

2. All dwelling units or guest rooms grouped within a building or complex shall have access locks keyed differently.

(i) Door Panels and Glazing. Door panels or glazing materials located within 36 inches (900 mm) of the inside lock activating device of an accessible swinging door assembly shall withstand the required impacts in accordance with the appropriate provisions of UBC Standard 41-1 Part A, Sec. 41.1007(h).

Exceptions: 1. Openings in doors, when such openings do not exceed 2 inches (50 mm) in the smaller dimension.

2. When the glazing material is U.L. Listed Burglary Resisting Glazing Material (UL Standard 972) installed in an approved manner according to manufacturer's specifications.

3. When the opening is protected by approved metal bars or grilles having a pattern such that the minimum dimension of any opening on the bars or grilles does not exceed 2 inches (50 mm).

Horizontal Sliding Doors.

Sec. 4106. (a) General. All accessible prime horizontal sliding doors shall be designed, constructed and installed so that, when in the locked position they shall not permit entry when tested in accordance with UB C Standard No. 41-1 Part B.

Windows

Sec. 4107. (a) General. All accessible prime windows assemblies shall be designed, constructed and installed so that, when in the locked position they shall not permit entry when tested in accordance with UBC Standard No. 41-2.

Exceptions: 1. Fixed windows which are not designed to open; the glazing material of which may be installed in a sash, or may be installed directly into a window frame.

2. Windows located more than 36 inches (900 mm) from the inside lock activating device of a swinging door assembly when such windows have a clear cross section of 96 inches^2 (600 cm^2) or less and have as their smallest dimension a span of less than 6 inches (150 mm).

3. Windows protected by approved metal bars or grilles having a pattern such

that the maximum dimension of any opening in the bars or grilles shall not exceed 2 inches (50 mm).

(b) Accessible louver or jalousie window shall be protected by approved metal bars or grilles.

Disassembly

Section 4108. All accessible prime door and window assemblies and components shall incorporate no screws, bolts, nails, staples or other mechanical fasteners which are accessible from the exterior and which could be removed by hand with the aid of a knife, screwdriver or pliers within a period of 5 minutes, thus permitting entry by disassembly.

Acceptance

Sec. 4109. The methods of installation and on-site assembly of swinging door units and other assemblies as described in this Chapter shall be deemed to meet the standards of this Chapter.

All assemblies and components which are otherwise subject to the Standards of this Chapter shall have a label or other identification indicating compliance with the applicable standards.

Exception: Such labeling requirements may be waived and the subject products deemed to qualify where proof of compliance satisfactory to the building official is submitted as per American National Standard Practice for Certification by Producer or Supplier, ANSI Z34.2-1969.

Alternate Security Provisions

Sec. 4110. The provisions of this Chapter are not intended to prevent the use of any device or method of construction not specifically prescribed by this Chapter when such alternate provides equivalent security and has been approved as provided by SBC 103(7) and SBC 106.

TABLE NO. 41-A SWINGING DOOR ASSEMBLIES[1]

TEST	Measure	Level
Static Bolt Load[2]	Resistance	150 lbf (670 N)
Hinge Pin Tensile Load[3]	Resistance	50 lbf (225 N)
Jamb/Wall Stiffness[4]	Force to Spread	1350 lbf (6000 N)
	Increase in Lockfront to Strike Space,	0.375 In. (9.5mm)
Knob Torque[5]	Resistance (25 N-m)	18.5 lbf-ft
Cylinder Core Load	Resistance	290 lbf (1300 N)
Knob Impact[5]	Resistance	One blow of 74 ft-lbf (100 J)
Door Impact	Impact resistance at center and panel	2 blows of 59 ft-lbf (80 J)
	Impact resistance at glazing[6]	One blow of 74 ft-lbf (100 J)
Hinge Impact	Impact resistance at hinge	2 blows of 59 ft-lbf (80 J)
Bolt Impact	Impact resistance at bolt	2 blows of 59 ft-lbf (80 J)

[1]For test methods see UBC Standard No. 41-1, Part A.

[2]Minimum projection of 1 In. (25 mm) for bolts and 1/2 In. (12 mm) for latches.

[3]Applies to outswinging doors only.

[4]Bolt of latch must remain in strike.

[5]Applies to key-in-knob locksets where the bolt and the latch are mechanically interconnected such that a single action projects or retracts both.

[6]Does not apply when the glazing starts at a distance of 36 In. (900 mm) or more from the lock.

Note: Lbf = pounds force.

Also:

Add new Uniform Building Code Standards as follows:

UNIFORM BUILDING CODE STANDARD NO. 41-1

TESTS FOR SECURITY OF DOOR ASSEMBLIES

Part A--Swinging Doors

Based on Standard Methods F476-76 of the American Society for Testing and Materials.

See Section 4105, Uniform Building Code

Scope

Sec. 41.1001. Part A of this Standard covers test methods for swinging door assemblies that are required for building security by the Uniform Building Code.

The wall assembly described in Section 41.1005 is considered suitable for the scope of these methods of test. Wall construction different in dynamic response from that described in Section 41.1005 may require testing according to Section 41.1007(d).

Definitions

Sec. 41.1002. BOLT is a metal bar which, when actuated, is projected (or "thrown") either horizontally or vertically into a retaining member, such as a strike plate, to prevent a door from moving or opening.

BOLT PROJECTION (OR BOLT THROW) is the distance from the edge of the door, at the bolt center line, to the farthest point on the bolt in the projected position, when subjected to end pressure.

COMPONENT, as distinguished from a part, is a subassembly which combines with other components to make up a total door assembly. The prime components of a door assembly include: door, lock, hinges, jamb/wall, jamb/strike and wall.

CYLINDER is the cylindrical subassembly of a lock containing the cylinder core, tumbler mechanism and the keyway. A double cylinder lock is one which has a key-actuated cylinder on both the exterior and interior of the door.

CYLINDER COR (OR CYLINDER PLUG) is the central part of a cylinder containing the keyway, which is rotated by the key to operate the lock mechanism.

DEADBOLT is a lock bolt which does not have a spring action as opposed to a latch bolt, which does. The deadbolt must be actuated by a key and/or knob or thumb turn and when projected becomes locked against return by end pressure.

DEAD LATCH (OR DEADLOCKING LATCH BOLT) is a spring-actuated latch bolt having a beveled end and incorporating a plunger which, when depressed, automatically lock the projected latch bolt against return by end pressure.

DOOR ASSEMBLY is a unit composed of a group of parts or components which make up a closure for an opening to control passageway through a wall. For the purposes of this standard, a door assembly consists of the following parts: door; hinges; locking device or devices; operation contacts (such as handles, knobs, push plates); miscellaneous hardware and closers; the frame, including the head and jambs plus the anchorage devices to the surrounding wall and a portion of the surrounding wall extending 36 inches (900 mm) from each side of the jambs and 16 inches (400 mm) above the head.

JAMB is a vertical member of a door frame to which the door is secured.

JAMB/STRIKE is that component of a door assembly which receives and holds

secure the extended lock bolt; the strike and jamb used together are considered a unit.

JAMB/WALL is that component of a door assembly to which a door is attached and secured; the wall and jamb, used together, are considered a unit.

KEY-IN-KNOB is a lockset having the key cylinder and other lock mechanisms such as a push or turn button contained in the knobs.

LATCH (OR LATCH BOLT) is a beveled, spring-actuated bolt, which may or may not have a deadlocking device.

LOCK (OR LOCKSET) is a keyed device (complete with cylinder, latch or deadbolt mechanism, and trim such as knobs, levers, thumb turns, escutcheons, etc.) for securing a door in a closed postion against forced entry. For the purposes of this Standard, a lock does not include the strike plate.

LOCK FRONT is the outer plate through which the locking bolt projects and which is usually flush with the edge of the door.

PART, as distinguished from component, is a unit (or subassembly) which combines with other units to make up a component.

STRIKE is a metal plate attached to, or mortised into, a door or door jamb to receive and to hold a projected latch bolt and/or deadbolt in order to secure the door to the jamb.

SWINGING DOOR is a stile (side) hinged door.

Samples for Testing

Sec. 41.1003. Specimens shall be representative and the construction shall be

verified by assembly drawings and bill of materials. Complete manufacturer or fabricator installation instructions and full-size or accurate scale templates for all items or hardware shall be included.

Test Equipment Performance

Sec. 41.1004. (a) Door Ram. The door ram shall be a pendulum system with a cylindrical weight capable of delivering horizontal impacts of 59 ft-lbf (80 J). The striking end of the weight shall be hemispherical and have a diameter of approximately 6 inches (150 mm). The impact nose may be made of any durable impact resistant material such as epoxypolyamide resin.

(b) Componet Ram. The component ram shall be a pendulum system capable of delivering horizontal impacts of 74 ft-lbf (100 J). The pendulum weight shall be cylindrical with a maximum diameter of 3 inches (7.6 cm) and a striking end consisting of a 1/4 inch (6 mm) carriage bolt, or equivalent.

(c) Vertical Impactor. The vertical impactor shall be a rigid pendulum system consisting of a weight with a flat rectangular striking surface capable of delivering downward impacts of 74 ft-lbf (100 J).

(d) Torque Applicator. The portable torque applicator shall be capable of delivering and measuring up to 18.5 lbf-ft (25 N-m) of torque to door knobs. The torque-loading adapter shall be designed to grip the knob.

(e) Tension-Loading Device. The tension-loading device shall be capable of delivering and measuring tensile forces of up to 290 lbf (1300 N).

(f) Compression-Loading Device. The compression-loading device shall be capable of delivering and measuring compresive forces of up to 150 lbf (670 N).

(g) Jamb-Spreading Device. The jamb-spreading device shall be capable of delivering to door jambs and measuring spreading forces of up to 1350 lbf (6000 N) with a means of measuring up to 1/2 inch (12 mm) of spread in the door opening. The device shall have on each end either a loading-bearing plate or pressure foot which provides a minimum contact surface of 1 1/2 by 5 inches (38 mm by 125 mm).

(h) Instrument Accuracy. All test monitoring equipment shall be calibrated to an accuracy of ± 5 percent. The impact energy of each pendulum system shall be controlled to within ± 1 percent.

(i) Manipulation Tools. Tools used for manipulation tests of this Standard shall consist of the following: a knife or spatula with a thin blade approximately 1/32 inch (0.8 mm) thick, not more than 1 inch (25 mm) wide and no longer than 6 inches (150 mm); slotted and phillips type screw drivers not exceeding 10 inches (250 mm) in length; common hand and needle nose pliers not exceeding 8 inches (200 mm) in length; and a piece of stiff steel wire with a diameter of approximately 1/16 inch (1.6 mm) and length of not in excess of 3 feet (900 mm).

Construction and Size

Sec. 41.1005. The construction and size of the test door assemblies, consisting of single doors, doors in pairs, special-purpose doors (such as Dutch doors), jambs and headers, and all hardware components shall be representative of that for which acceptance is desired.

The test fixture for door, door jamb, hinge, lock strike and other components shall consist of a vertical wall section constructed from 2 by 4 wood studs, 16 inches (410 mm) on center with double studding around the rough openings and outer edges of the fixture. The test fixture shall be covered with 1/2 inch (12 mm) exterior grade plywood sheathing on the exterior and 1/2 inch (12 mm) gypsum board on the interior and shall be secured to a supporting fixture and to the laboratory floor such as to simulate the rididity normally provided to a door assembly in a building by the ceiling, floor and walls.

An alternate test fixture for lockset components consisting of a small door assembly may be used. The frame shall be fabricated from steel angle and plate at least 3/16 inch (5 mm) thick. The test panel shall be 24 inches (600 mm) square and 1 3/4 inches (45 mm) thick, made by bonding three pieces of plywood together or by cutting a section from 1 3/4 inch (45 mm) solid wood core door. A 2 by 2 by 1/8 inch (50 by 50 by 3 - mm) steel angle shall be bolted to the hinge edge of the door panel, and a removable steel strike plate shall be bolted to the frame at the lock position of the door panel.

The test fixture for static bolt load tests shall consist of a vertical panel fabricated from wood attached to a stable horizontal base. The top edge shall be about 1 3/4 inches (45 mm) thick and the top edge shall be prepared to permit the lockset which is being tested to be mounted in the panel in accordance with the manufacturer's instructions.

Mounting for Test

Sec. 41.1006. Prepare doors and door jambs for the installation of locksets and hinges in conformance with the manufacturer's instructions. Follow the manufacturer's instructions for fastening the jamb to the test fixture described in Section 41.1005.

To test doors, door jambs, hinges, and jamb/strikes as components, install them in the component test fixture described in Section 41.1005. Except when testing hinges, hinge the door with one and one-half pair of 4 1/2 inch (115 mm) steel butt hinges, and fix it in the closed-locked position (at the normal lock point) with a real or simulated latch bolt having sufficient strength and stiffness to prevent it from failing during test. In the absence of other construction specifications, make the clearances on the lock side, hinge side and top of the door 1/8 $\pm$ 1/64 (3.2 $\pm$ .04 mm). Clearance at the threshold is not considered critical in these tests.

To test locksets as components, install them in the alternate component test fixture described in Section 41.1005. Fix the test panel in the closed-locked position at the normal locking point. Hinge the test panel with two 4 1/2 inch (115 mm) steel butt hinges.

To test locksets for static bolt load, install them in the the test fixture described in Section 41.1005.

Conduct of Tests

Sec. 41.1007. (a) Test Sequence. Perform tests in the same sequence as presented below, as appropriate for the item under test, using new components for each destructive test.

(b) STatic Bolt Load Test. To test locks as components, mount the lock in the

test fixture described in Section 41.1006. Lock the door lock with the deadbolt and dead latch in the fully projected position. If the lock incorporates a dead latch plunger, attach a 1/4 inch (6.5 mm) spacer to the lock front. Allow the dead latch plunger to project flush with the top of the spacer, and hold it in that position with a piece of tape or by other suitable means.

Place the test fixture and lock in a compression-testing machine, or mount it on a firm, level surface with the compression-loading device directly above it, the loading face parallel to the lock front, and the axis of the hydraulic ram perpendicular to the lock front. Apply an increasing compressive load to the end of the latch bolt or the deadbolt to the required resistance load and note the bolt or latch projection (the distance between the lock front surface to the farthest point on the bolt or latch at the center line). Such projection shall not be less than 1/4 inch (6.5 mm) while under load.

To test for bolt projection, apply end pressure to the projected deadbolt or latch and measure the distance from the lock front surface to the farthest point on the bolt or latch at the center line.

Following the test of a lock incorporating a dead latch, place the strike plate over the latch of a dead latch to determine whether it is possible for both the dead latch and the dead latch plunger to enter the hole in the strike simultaneously.

(c) Hinge Pin Tensile Load. Drill a hole into the end of the exposed hinge pin with a No. 21 drill, centered on and aligned with the axis of the pin to a depth of 0.5 inch (12 mm). Tap the hole with a 10-32 tap and attach the tensile-loading adapter to it with a hardened cap screw. Clamp one leaf of the hinge in a vice so that the hinge pin is in the horizontal plane. Attach the tensile-loading device to a rigid load-bearing support in front of the hinge and align the pulling axis with the axis of the hinge pin. Attach the tensile-loading adapter to the tensile device

and apply the required load.

(d) Jamb/wall Stiffness Test. Prepare the test specimen in accordance with Section 41.1006 using the full-size test fixture. Position the jamb-spreading device between the door jambs at lock height. Apply increasing force as required and measure the space between the lock front and strike.

While the required load is being applied, or the lock front-to-strike distance increased, push or pull on the door to determine whether the deadbolt or dead latch is engaged with the strike.

(e) Knob Torque Test. Prepare the test specimen in accordance with Section 41.1006 and lock the door or test panel in the closed position. Attach the torque-loading adaptor to the knob and connect the torque applicator to it. Alternately subject the knob to a torque of up to the required torque once in both the clockwise and counter-clockwise directions, applying the torque as rapidly as possible. Inspect the lock to determine whether the bolt is retracted from the strike when the torque is applied. If the knob is broken off, attempt to open the door or test panel by manipulating the lock mechanism by hand or with the aid of manipulation tools as described in Section 41.1004(i) (such lock mechanism shall resist manipulation for a period of not less than 5 minutes.)

With the door or test panel open, and the deadbolt or dead latch in the projected, locked postion, attempt to (1) depress the deadbolt by applying hand pressure to its end or (2) depress latch and dead latch plunger fully, allow the latch to extend, then slowly allow the plunger to project until the last point of dead locking is reached.

(f) Cylinder Core Tension Test. Prepare the test specimen in accordance with Section 41.1006 and lock the door or test panel in the closed postion. Using a No. 21 drill, drill a hole in the cylinder core adjacent to the keyway to a minimum depth

of 1/2 inch (12 mm). Tap this hole with a 10-32 thread. Attach the tensile-loading device to a rigid load-bearing support in front of the cylinder and align the pulling axis with a 10-32 hardened cap screw fully threaded into the tapped hole. Connect the cylinder tensile-loading device to the adaptor and apply the required tensile force to the cylinder. Following this test, release the load and attempt to open the door or test panel by manipulating an exposed lock mechanism for a period of 5 minutes by hand or with the aid of manipulation tools as described in Section 41.1004(i). If the core or cylinder is not damaged, open the door and test the dead latch and deadbolt for end pressure resistance as in Section 41.1007(e).

(g) Knob Impact Test. Prepare the test specimen in accordance with Section 41.1006 and lock door or test panel in the closed position. Position the vertical impactor so that the pendulum arm is horizontal when the striking weight contacts the top of the door knob, and its center of gravity is in the vertical center-line through the knob. Raise the weight to the height necessary to deliver the required impact and release it. Deliver the required number of impacts to the knob. After each impact, attempt to open the door or test panel by turning the knob, and if the knob is broken off, by manipulating the exposed lock mechanism by hand or with the aid of manipulation tools as described in Section 41.1004(i). Such lock mechanism shall resist manipulation for a period of not less than 5 minutes. Open the door and test the dead latch and deadbolt for end pressure resistance as in Section 41.1007(e).

(h) Door Impact Test. Prepare the test specimen in accordance with Section 41.1006, using the full-size test fixture, and lock the door in the closed position. Set up the door ram pendulum weight so that its axis is horizontal, and perpendicular to the face of the door at a point defined by the intersection of the vertical center line of the door and a line of the door and a line from the center of the bolt to the center of the mid-height hinge (or the midpoint between hinges, when the door is hung

with two hinges).

Attach to the door, centered on the impact point, a rigid foamed polystyrene impact buffer which has a diameter of 6 inches (150 mm), a thickness of 2 inches (50 mm) and a density of 2 lbs/ft^3 (32 Kg/m^3). Position the door ram such that its striking nose just touches the surface of the buffer when at rest. Pull back the pendulum weight to the height necessary to produce the required impact, and release it. Subject the door to two impacts at each required impact level, attaching a new buffer for each impact. If the door is forced open by the test, without damaging the jamb/strike or lock component, the door specimen fails the test. If the door surface is broken, attempt to reach inside the door and unlock it from the inside.

If the door has one or more recessed panels, subject the one closest to the lock to two impacts at each required impact level. Locate the impact point on the corner of the panel closest to the lock, 3 inches (75 mm) in from the vertical and horizontal edges of the panel. Perform the test as described above, attaching a new impact buffer for each impact. If the panel is broken, attempt to open the door by reaching through the opening and unlocking the door from the inside.

To test glazing panels, set up the component ram pendulum weight so that, at rest, its striking nose just touches the front surface at a point located along a line from the center of the inside lock activating device through the closest point on the perimeter of the glazing panel, which is within 36 inches (900 mm), and just far enough onto the panel to ensure that the impactor clears the edge of the door and the panel. Pull back the pendulum weight to the height necessary to produce the required impact and release it. If the panel is broken, reach through the opening and attempt to open the door by unlocking it from the inside.

Following the door impact test, inspect the door to determine whether there is enough damage to invalidate the subsequent tests; if there is, replace it.

(i) Hinge Impact Test. Prepare the test specimen in accordance with Section 41.1006 using the full-size test fixture and lock the door in a closed position. When testing hinges incorporating a mechanical interlock between the leaves in the closed position and door assemblies using such hinges, remove the hinge pin during this test. Set up the door ram pendulum weight so that its axis is horizontal, and perpendicular to the exterior face of the door at a point 8 inches (200 mm) from the bottom hinge on a horizontal line through the midpoint of the hinge.

Attach an impact buffer as described in section 41.1007(h) to the face of the door, centered on the impact point, and position the pendulum so that its striking nose just touches the surface of the buffer when at rest. Pull back the pendulum weight to the height necessary to produce the required impact and release it. Subject the door to two impacts at each required impact level, attaching a new buffer for each impact. After each impact, try to open the door.

A door component failure consists of any splitting or fracture of the door which allows it to be opened; a jamb component failure consists of any splitting, fracture or pullout of the attachment screws which allows the door to be opened; a hinge component failure consists of any damage to the leaves or pin of the hinge which allows the door to be opened.

Following the hinge impact test, inspect the components to determine whether there is sufficient damage to invalidate the subsequent test; if there is, replace those damaged.

(j) Bolt Impact Test. Prepare the test specimen in accordance with Section 41.1006 and lock the door in the closed position. Set up the door ram pendulum weight so that its axis is horizontal, and perpendicular to the face of the door at a point defined by the intersection of a vertical line 8 inches (200 mm) from the lock edge, and a line from the center of the bolt to the center of the mid-height hilnge (or the midpoint between hinges when the door is hung with two hinges).

Attach an impact buffer as described in Section 41.1007(h) to the face of the door, centered on the impact point, and position the pendulum so that it just touches the surface of the buffer when at rest. Pull back the pendulum weight to the height necessary to produce the required impact and and release it. Subject the door to two impacts at each required impact level, attaching a new buffer for each impact. After each impact, try to open the door or test panel by turning the knob, and test the deadbolt and dead latch for end pressure resistance as in Section 41.1007(e).

Acceptance Criteria

Sec. 41.1008. (a) General. An item shall fail a test if an individual can open the door from the outside by pushing or pulling on it, by turning the knob, by manipulating an exposed lock mechanism, by reaching through damaged portions of the door and unlocking it from the inside; or can enter through damaged portions of the door even though it might not be possible to open the door; or if the dead latch or deadbolt can be depressed by a static load applied by hand after being subjected to the levels of energy set forth in the Uniform Building Code.

A jamb/strike component failure consists of a pullout or fracture of the strike attachment screws or any splitting, bending or fracture of the door jamb at the strike which permits the door to be opened; a door component failure consists of any splitting or fracture of the door which allows it to be opened; a lock component failure consists of any damage to the lock mechanism or bolt which allows the door to be opened after being subjected to the levels of energy set forth in the Uniform Building Code.

(b) Disassembly. Door assemblies and components shall incorporate no scerew, bolt, nail, staple or other mechanical fastener which is accessible from the outside and which could be removed by hand or with the aid of manipulation tools as described in Section 41.1004(i) within a period of 5 minutes thus permitting entry by

disassembly.

(c) Strike Hole Size. For locks incorporating dead latches, the size of the latch retaining hole in the strike shall be such that it shall not be possible for both the dead latch and dead latch plunger to enter the hole together when the latch is fully extended.

(d) Bolt Pressure Resistance. When locks are tested, the force required to depress the latch or deadbolt from the locked and projected position shall not be less than specified in the Uniform Building Code.

Report

Section 41.1009. The test report shall include:

(a) Name and Address of the facility or laboratory performing these tests and issuing the report as well as the dates of testing and issuance of the report.

(b) Identification of the sample tests (e.g., name of manufacturer, model and/or series number of product and other information as may be pertinent).

(c) Final assembly drawing(s) and components list relative to type, size, location and number of anchors, locking devices and mounting screws used.

(d) Statement indicating that specimen either passed or failed these tests.

(e) Statement that all tests were conducted in accordance with these procedures.

Part B--Horizontal Sliding Doors

Based on Architectural Aluminum Manufacturer's Association Specifications AAMA 1303.4-1973 (Second Printing) for Forced-Entry Resistance of Aluminum Sliding Glass Doors and National Woodwork Manufacturer's Association Standard I.S.3-70 as amended October, 1974, for Forced-Entry Resistance of Wood Sliding Patio Doors.

See Section 4106, Uniform Building Code

Scope

Sec. 41.1011. Part B of this Standard covers test methods for sliding door assemblies that are required for building security by the Uniform Building Code .

Test Equipment

Sec. 41.1012. Four tension-loading devices capable of delivering and measuring tensile forces of up to 300 lbf (1340 N) with an accuracy of + 5 percent for each applied load level are required for these tests.

Manipulation tools shall consist of: a knife or spatula with a thin blade approximately 1/32 inch (0.8 mm) thick, not more than 1 inch (25 mm) wide and no longer than 6 inches (150 mm); slotted and phillips type screw drivers not exceeding 10 inches (250 mm) in length; common hand and needle nose pliers not exceeding 8 inches (200 mm) in length; and a piece of stiff steel wire with a diameter of approximately 1/16 inch (1.6 mm) and a length of not in excess of 3 feet (900 mm).

Disassembly

Sec. 41.1013. Door assemblies and components shall incoporate screw, bolt, nail, staple or other mechanical fastener which is accessible from the outside and which could be removed by hand or with the aid of manipulation tools as described in Section 41.1012 within a period of 5 minutes thus permitting entry by disassembly.

Samples for Testing

Sec. 41.1014. Specimens shall be representative, and the construction shall be

verified by assembly drawings and bill of materials. Complete manufacturer or fabricator installation instructions and full-size or accurate scale templates for all items and hardware shall be included.

Construction and Size

Sec. 41.1015. The construction and size of the test door assemblies, jambs and headers, and all hardware components shall be representative of that for which acceptance is desired.

The door assembly and mounting in the support fixture shall simulate the rigidity normally provided to a door assembly in a building by the ceiling, floor and walls.

Tests

Sec. 41.1016. Sample doors submitted for testing shall be glazed. Panels shall be closed and locked. Holes may be drilled at convenient locations on the assembly to attach load adapter brackets and the glazing may be taped to prevent possible injury from shattering under load. Loads may be applied from either the interior or exterior side of the door.

Prior to testing, remove from the sliding door assembly all mechanical fasteners which can be removed from the exterior by hand or with the aid of manipulation tools, as described in Section 41.1012, within a period of 5 minutes.

Tests shall be performed in the following order:

Test I. With the panels in the normal position, a concentrated load of 300 pounds (1340 N) shall be applied separately to each vertical stile incorporating a locking device, at a point on the stile within 6 inches (150 mm) of the locking device, in the direction parallel to the plane of the glass that would tend to open the door. Remove the load and determine if the locking device can be unlocked by manipulation as described in Test VIII.

Test II. With panels in the normal position, a concentrated load of 300 pounds (1340 N) shall be applied separately to each vertical pull stile incorporating a locking device, at a point on the stile within 6 inches (150 mm) of the locking device, in the direction parallel to the plane of the glass that would tend to open the door while, simultaneously, an additional concentrated load of 150 pounds (670 N) is applied to the same area of the same stile in a direction perpendicular to the plane of glass toward the interior side of the building. Remove the load and determine if the locking device can be unlocked by manipulation as described in Test VIII.

Test III. With the panels in the normal position, a concentrated load of 300 pounds (1340 N) shall be applied separately to each vertical pull stile incorporating a locking device, at a point on the stile within 6 inches (150 mm) of the locking device, in the direction parallel to the plan of the glass that would tend to open the door while, simultaneously, an additional concentrated load of 150 pound (670 N) is applied to the same area of the same stile in the direction perpendicular to the plane of the glass toward the exterior side of the door. Remove the load and determine if the locking device can be unlocked by manipulation as described in Test VIII.

Test IV. With the movable panel lifted upward to its full limit within the confines of the door frame (a force of 150 pounds [670 N], plus the weight of the panel, shall be divided equally and applied to the bottom rail within 6 inches (150 mm) of the corners to move panels upward), a concentrated load of 300 pounds (1340 N) shall be applied separately to each vertical pull stile incorporating a locking device, at a point on the stile within 6 inches (150 mm) of the locking device, in the direction parallel to the plane of the glass that would tend to open the door. With the loads applied, determine if the locking device can be unlocked by manipulation as described in Test VIII.

Test V. With the movable panel lifted upward to its full limit within the confines of the door frame as described in Test IV, a concentrated load of 300 pounds (1340 N) shall be appliled separately to each vertical pull stile incorporating a locking device, at a point on the stile within 6 inches (150 mm) of the locking device, in the direction parallel to the plane of the glass that would tend to open the door while, simultaneously, and additional concentrated load of 150 pounds (670 N) is applied to the same area of the same stile in the direction perpendicular to the plane of the glass toward the interior side of the door. With the loads applied, determine if the locking device can be unlocked by manipulation as described in Test VIII.

Test VI. With the movable panel lifted upward to its full limit within the confines of the door panel as described in Test IV, a concentrated load of 300 pounds (1340 N) shall be applied separately to each vertical stile incorporating a locking device, at a point on the stile within 6 inches (150 mm) of the locking device, in the direction parallel to the plane of the glass that would tend to open the door while, simultaneously, and additional concentrated load of 150 pounds (670 N) is applied to the same area of the same stile in the direction perpendicular to the plane of the glass toward the exterior side of the door. With the loads applied, determine if the locking device can be unlocked by manipulation as described in Test VIII.

Test VII. For inside sliding doors, repeat Test V while simultaneously applying a concentrated load of 50 pounds (220 N) at the end of the movable bottom rail near the interlock stiles and inward. For outside sliding doors, repeat Test VI while simultaneously applying a concentrated load of 50 pounds (220 N) at the end of the movable bottom rail near the interlock stiles and outward.

Test VIII. Examine the assembly and determine a method and position for inserting a tool through the door assembly from the outside so as to contact the

locking device or the latch. Determine whether it is possible to insert or manipulate with any of the manipulation tools described in Section 41.1012 so as to unlock the door. Such assemblies shall resist manipulation for a period of not less than 5 minutes.

Test IX. Repeat Tests I, II and III for fixed panels locating the load point at the midpoint of the stile opposite the meeting stile of the panel under test.

Performance Requirements

Sec. 41.1017. A sliding door assembly shall fail these tests if at any time during or after the test the sliding door assembly does not remain engaged, intact and in the closed and locked position; or if one can enter by manipulating an exposed component or through displaced or damaged portions.

Report

Sec. 41.1018. See Section 41.1009.

DIRECTIONS AND POINTS OF LOAD APPLICATION

FOR TESTING OF HORIZONTAL SLIDING DOORS

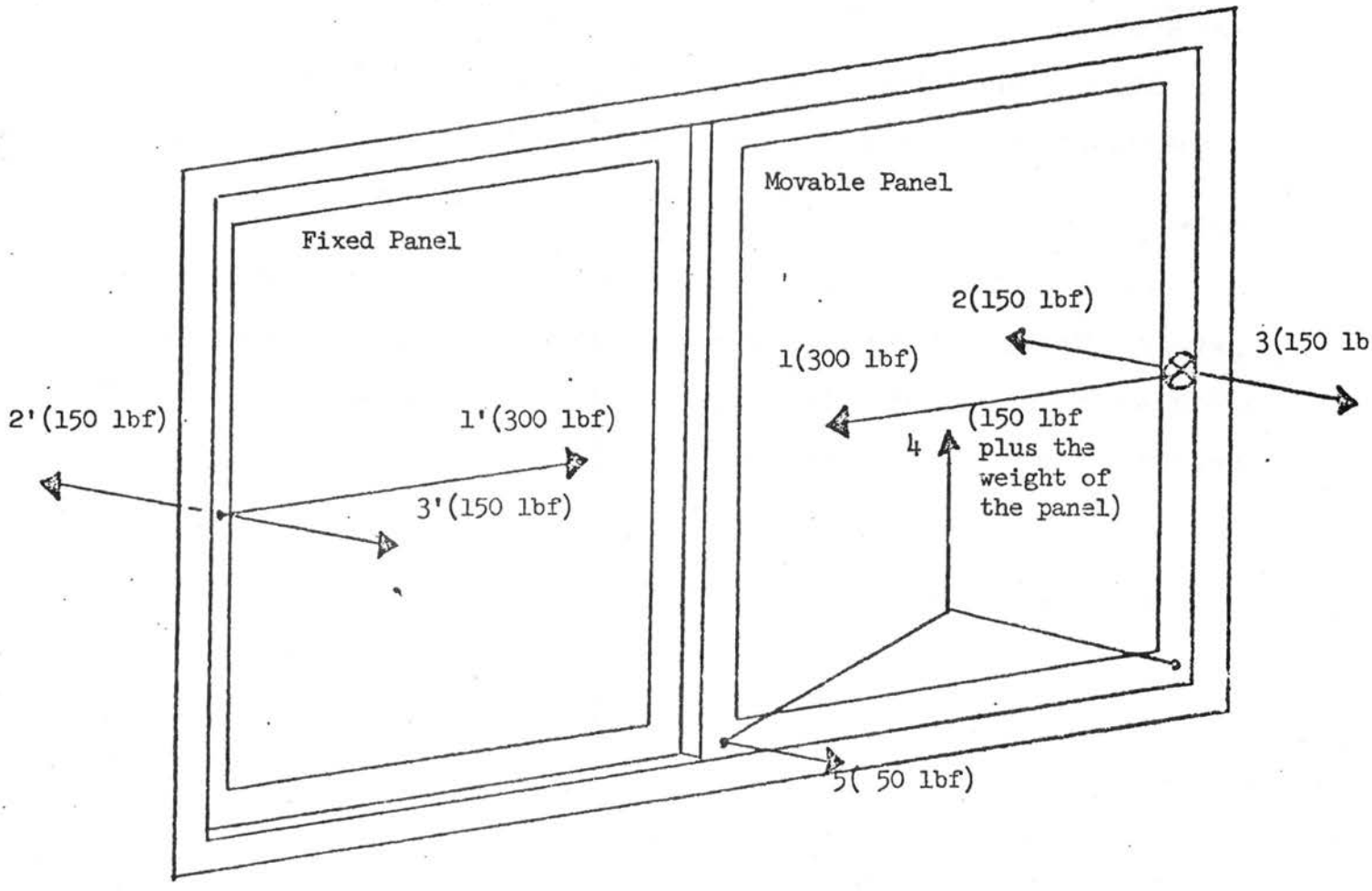

Movable and Fixed Panel Tests:

Test I	Apply load 1
Test II	Apply loads 1 & 2
Test III	Apply loads 1 & 3
Test IV	Apply loads 4 & 1
Test V	Apply loads 4, 1 & 2
Test VI	Apply loads 4, 1 & 3
Test VII	Apply loads 4, 1, 3 & 5
Test VIII	Manipulation Described
Test IX	For fixed panels repeat Tests I, II & III with the load point at the midpoint of the stile opposite the meeting stile of the door panel being tested.

FIGURE 1

UNIFORM BUILDING CODE STANDARD 41-2

TESTS FOR SECURITY OF WINDOW ASEMBLIES

Based on Architectural Aluminum Manufacturer's Association Specifications AAMA 1302.4-1973 for Forced-Entry Resistant Aluminum Prime Windows and Recommended Standards of the International Conference of Building Officials.

See Section 4107, Uniform Building Code

Scope

Sec. 41.2001. This Standard covers test methods for window assemblies that are required for building security by the Uniform Building Code. For the purpose of this Standard, windows are classified as follows: Type A window assemblies incorporate one or more sashes that open by sliding in the plane of the wall in which the window is installed.

Type B window assemblies incorporate one or more framed sashes which are hinged at or near two corners of the individual sash and open toward the exterior of the wall.

Type C are window assemblies which incorporate one or more sashes which open toward the interior and are hinged at or near two corners of the sash.

Type D are window assemblies which incorporate one or more sashes which are hinged or pivot near the center so that part of the sash opens into the interior wall and part opens toward the exterior.

Definitions

Sec. 41.2002. JAMB--See WINDOW FRAME.

LOCKING DEVICE is a part of a window assembly which is intended to prevent movement of the movable sash, which may be the sash lock or sash operator.

MULLION is a window frame member which meets with and provides structural support to a pair of adjacent sashes at their meeting edges.

MUNTIN is a structural member of a sash which extends either horizontally between the stiles or vertically between the rails to support individual panes of glazing material when the sash incorporates two or more panes.

RAIL is a horizontal member of a sash frame. A meeting rail is one which mates with a rail of another sash or a framing member of the window frame when the sash is in the closed position.

SASH is an assembly of stiles, rails and, sometimes, muntins assembled into a single frame which supports the glazing material. A fixed sash is one which is not intended to be opened. A movable sash is intended to be opened.

SILL is the lowest horizontal member of a window frame.

STILE is a vertical framing member of a sash. A meeting stile is one which mates with a stile of another sash, or a vertical framing member of the window frame when the sash is in the closed position.

WINDOW ASSEMBLY is a unit which includes a window and the anchorage between the window and the wall.

WINDOW FRAME is that part of a window which surounds and supports the sashes and is attached to the surrounding wall. The members include side jambs (vertical), head jamb (upper, horizontal), sill and mullions.

Test Equipment

Sec. 41.2003. Four tension-loading devices capable of delivering and measuring tensile forces of up to 150 lbf (670 N) with an accuracy of $\pm$ 5 percent for each applied load level are required for these tests.

Manipulation tools shall consist of: a knife or spatula with a thin blade approximately 1/32 inch (0.8 mm) thick, not more than 1 inch (25 mm) wide and no longer than 6 inches (150 mm); slotted and phillips type screw drivers not exceeding 10 inches (250 mm) in length; common hand and needle nose pliers not exceeding 8 inches (200 mm) in length; and a piece of stiff steel wire with a diameter of

approximately 1/16 inch (1.6 mm) and length of not in excess of 3 feet (900 mm).

Disassembly

Sec. 41.2004. Window assemblies and components shall not include screws, bolts, nails, staples or other mechanical fasteners which are accessible from the exterior and which could be removed by hand or with the aid of manipulation tools as described in Section 41.2003 within a period of 5 minutes thus permitting entry by disassembly.

Samples for Testing

Sec. 41.2005. Specimens shall be representative, and the construction shall be verified by assembly drawings and bill of materials. Complete manufacturer or fabricator installation instructions and full size or accurate scale templates for all items and hardware shall be included.

Sample Preparation

Sec. 41.2006. Following the manufacturer's installation instructions, install the window assembly in a rigid test fixture which simulates the rigidity normally provided to a window assembly in a building. The unit shall be fully glazed. Holes may be drilled in the sash at convenient locations to attach load adapter brackets and the glazing may be taped to prevent possible injury from shattering under load. Loads may be applied from either the interior or exterior side of the window.

Before performing any test, remove from the window assembly all screws, bolts, hing pins, rigid snap glazing beads or other mechanical fasteners which can be removed from the exterior by hand or with the aid of manipulation tools as described in Section 41.2003. Sashes shall be closed and locked.

Tests for Sliding Windows

Sec. 41.2007. Tests for Type A window assemblies shall be performed in the

following order:

Test I. With each sliding sash in the normal position, a concentrated load of 150 pounds (670 N) shall be applied separately to each sash member incorporating a locking device, at a point on a sash member within 6 inches (150 mm) of the locking device, in a direction parallel to the plane of the glass that would tend to openg the window. Remove the load and apply the manipulation test described in Section 41.2010.

Test II. With each sliding sash in the normal position, a concentrated load of 150 pounds (670 N) shall be applied separately to each sash member incorporating a locking device, at a point on a sash member within 6 inches (160 mm) of the locking device, in the direction parallel to the plane of the glass that would tend to open the window while, simultaneously, an additional concentrated load of 75 pounds (340 N) is applied in the same area of the same sash member in the direction perpendicular to the plane of the glass toward the interior side of the window. Remove the load and apply the manipulation test described in Section 41.2010.

Test III. With each sliding sash in the normal position, a concentrated load of 150 pounds (670 N) shall be applied separately to each sash member incorporating a locking device, at a point on the sash member within 6 inches (150 mm) of the locking device, in a direction parallel to the plane of the glass that would tend to open the window while, simultaneously, an additional concentrated load of 75 pounds (340 N) is applied to the same sash member in a direction perpendicular to the plane of the glass toward the exterior side of the window. Remove the load and apply the manipulation test described in Section 41.2010.

Test IV. For horizonal sliding windows, move the sliding sash upward by applying a force of 75 pounds, plus the weight of the sash, divided equally between the lower corners of the sash. For vertical sliding or hung type windows, move the sash toward the side offering the least resistance by applying a force of 75 pounds

(340 N) to the side corners opposite the frame member towards which the window is being moved. Simultaneously, apply a concentrated load of 150 pounds (670 N) to each sash member incorporating a locking device, at a point on the sash withing 6 inches (150 mm) of the locking device, in the direction parallel to the plane of the glass that would tend to open the window. With the assembly under load, apply the manipulation test described in Section 41.2010.

Test V. With the sliding sash moved upward (for horizontal sliding windows) or to the side (for vertical or hung-type windows) within the confines of the window frame as described in Test IV, a concentrated load of 150 pounds (670 N) shall be applied separately to each sash member incorporating a locking device, at a point on the sash within 6 inches (150 mm) of the locking device, in a direction parallel to the plane of the glass that would tend to open the window while, simultaneously, an additional concentrated load of 75 pounds (340 N) is applied to the same area of the same sash in the direction perpendicular to the plane of the glass toward the interior side of the window. With the assembly under load, apply the manipulation test described in Section 41.2010.

Test VI. With the sliding sash moved upward (for horizontal sliding windows) or to the side (for vertical sliding or hung-type windows) within the confines of the window frame as described in Test IV, a concentrated load of 150 pounds (670 N) shall be applied separately to each sash member incorporating a locking device, at a point on the sash member within 6 inches (150 mm) of the locking device, in the direction parallel to the plane of the glass that would tend to open the window while, simultaneously, an additional concentrated load of 75 pounds (340 N) is applied to the same sash member in the direction perpendicular to the plane of the glass toward the exterior side of the window. With the assembly under load, apply the manipulation test described in Section 41.2010.

Test VII. For inside sliding windows, repeat Test V while simultaneously

applying a concentrated load of 25 pounds (110 N) at the end of the movable sash member located opposite the frame member toward which the sash is either moved or lifted and near the corner which is furthest from the locking device; such load shall be applied perpendicular to the sash and toward the interior. For outside sliding windows, repeat Test VI while simultaneously applying a concentrated load of 25 pounds (110 N) located in the same manner as for inside sliding windows, but applied in the opposite direction or toward the exterior.

Test VIII. Repeat Tests I, II and III for fixed sashes, which are part of a Type A window assembly, locating the load point at the midpoint of the stile or rail opposite the meeting stile or rail of the sash under test.

Tests for Hinged Window Assemblies

Sec. 41.2008. Tests for Types B and C window assemblies shall be performed in the following order:

The manipulation test described in Section 41.2010 shall be applied after Tests I and II while the sash is under load and after Test IV with the loads removed.

Test I. With the swinging sash in the normal position, simultaneously apply a concentrated load of 75 pounds (340 N) within 3 inches (75 mm) of each end of the rail or stile which is opposite the hinged side, in the direction perpendicular to the plane of the glass that would tend to open the window.

Test II. Repeat Test I and simultaneously apply a load of 75 pounds (340 N) on the outside within 1 inch (25 mm) of each end of the stile or rail which is opposite the hinge side, in a direction parallel to the plane of the glazing which would tend to disengage the lock. Remove the loads.

Test III. With the swinging sash in the normal position, apply a concentrated load of 150 pounds (670 N) on the rail or stile containing the locking device within 6 inches (150mm) of the lock in a direction perpendicular to the place of the glass that would tend to open the window.

Test IV. Repeat Test III and simultaneously apply a load of 75 pounds (340 N) on the outside within 1 inch (25 mm) of each end of the stile or rail which is opposite the hinge side, in a direction parallel to the plane of the glazing which would tend to disengage the lock.

Tests for Pivoted Window Assemblies

Sec. 41.2009. Tests for Type D window assemblies shall be performed in the following order:

The manipulation test described in Section 41.2010 shall be applied after Tests I and II while the sash is under load and after Test IV with the loads removed.

Sec. 41.2009. Tests for Type D window asemblies shall be performed in the following order:

The manipulation test described in Section 41.2010 shall be applied after Tests I and II while the sash is under load and after Tests III and IV with the loads removed.

Test I. With the sash in the normal position, simultaneously apply a concentrated load of 37.5 pounds (170 N) within 3 inches (75 mm) of both ends of each rail or stile which is perpendicular to the pivot sides in the direction that would tend to open the sash. Remove the loads.

Test II. With the sash in the normal position, apply a concentrated load of 75 pounds (340 N) on a rail or stile containing a pivot within 1 inch (25 mm) of the pivot in a direction parallel to the pivots tending to disengage the pivot under test.

Test III. Repeat Test II, applying the load to the opposite rail or stile. Remove the load.

Test IV. With the sash in the normal position, apply a concentrated load of 150 pounds (670 N) on the rail or stile containing the locking device within 6 inches (75 mm) of the lock in a direction perpendicular to the sash and tending to open the

window.

Test V. Repeat Test IV while simultaneously applying the load specified in Test II. Repeat Test IV while simultaneously applying the load specified in Test III above.

Manipulation of Locking Device

Sec. 41.2010. Examine the assembly and determine a method and position of insertion of a tool through the window assembly from the outside so as to contact the locking device. Determine whether it is possible to insert any of the manipulation tools as described in Section 41.2003 and manipulate with them so as to unlock the window. Such window assemblies shall resist manipulation for a period of not less than 5 minutes.

Performance Requirements

Sec. 41.2011. A window assembly shall fail these tests if at any time during or after the tests the assembly does not remain engaged, intact and in the closed and lock position such as to preclude human entry.

Report

Sec. 41.2012. The test report shall include:

(a) Name and address of the facility or laboratory performing these tests and issuing the report as well as the dates of testing and issuance of the report.

(b) Identification of the sample tested (e.g., name of manufacturer, model and/or series number of product and other information as may be pertinent).

(c) Final assembly drawing(s) components list relative to type, size, location and number of anchors, locking devices and mounting screws used.

(d) Statement indicating that specimen either passed or failed these tests.

(e) Statement that all tests were conducted in accordance with these procedures.

DIRECTIONS AND POINTS OF LOAD APPLICATION

FOR TESTING OF TYPE A WINDOWS

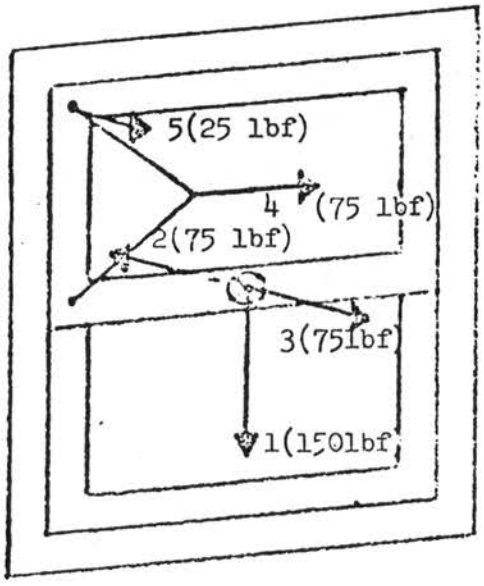

Double Hung

Sliding Sash Tests:

Test I	Apply load 1
Test II	Apply loads 1 & 2
Test III	Apply loads 1 & 3
Test IV	Apply loads 4 & 1
Test V	Apply loads 4, 1 & 2
Test VI	Apply loads 4, 1 & 3
Test VII	Apply loads 4, 1, 3 & 5
Test VIII	For fixed sashes locate the load point at the midpoint of the stile or rail opposite the meeting stile or rail of the sash under test and apply loads as described in Tests I, II & III.

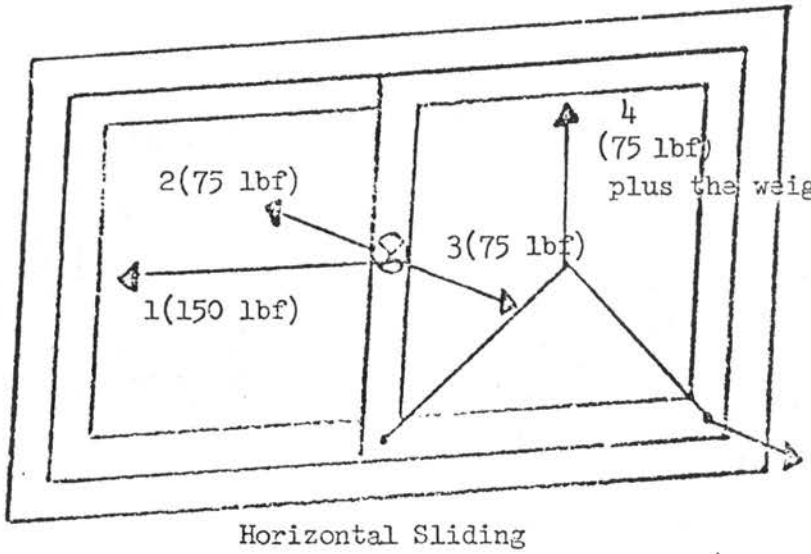

Horizontal Sliding

FIGURE 2

DIRECTIONS AND POINTS OF LOAD APPLICATION

FOR TESTING OF TYPES B AND C WINDOWS

Tests for Hinged Sashes

Test I	Apply load 1's
Test II	Apply load 1's and load 2's
Test III	Apply load 3
Test IV	Apply load 3 and load 2's

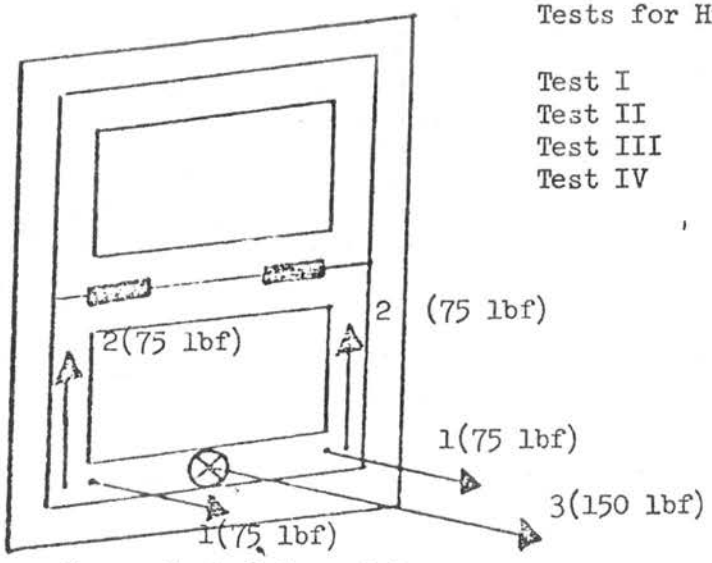

Lower Sash Swings Out
Awning Type

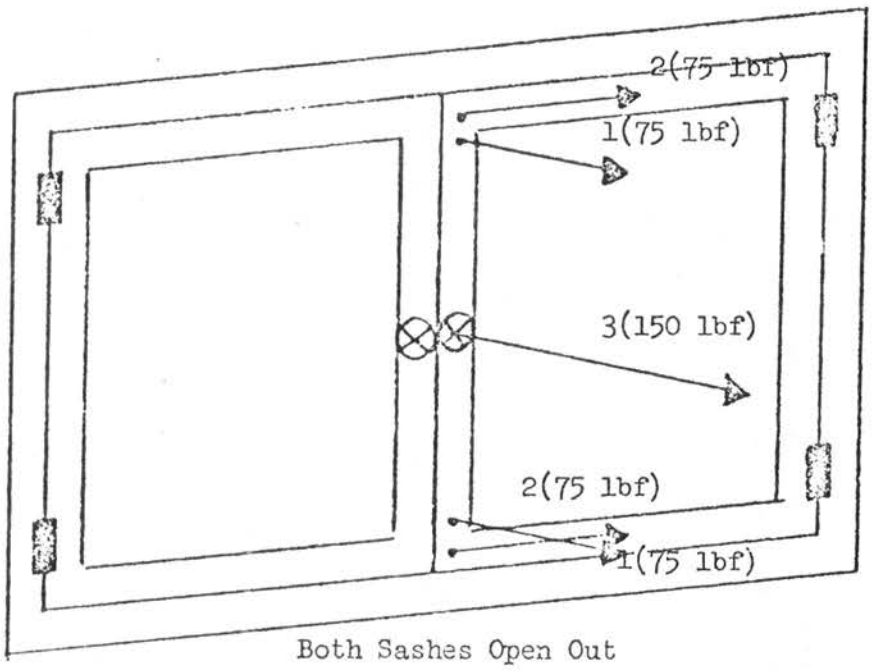

Both Sashes Open Out
Casement Type

FIGURE 3

DIRECTIONS AND POINTS OF LOAD APPLICATION

FOR TESTING OF TYPE D WINDOWS

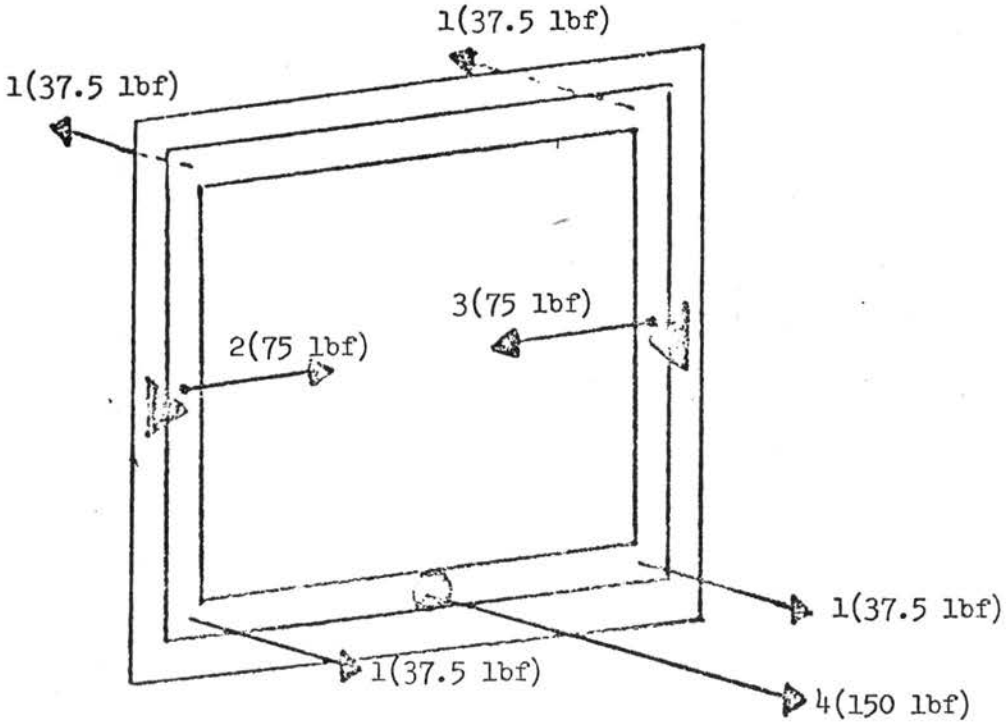

As shown, pivots are represented as triangles and sash pivots out from the bottom and in at the top.

Pivoting Sash Tests:

Test I	Apply load 1's
Test II	Apply load 2
Test III	Apply load 3
Test IV	Apply load 4
Test V	Apply loads 4 & 2, then remove load 2 and apply loads 4 & 3

FIGURE 4