

Minnesota Attorney General: Administrative Rules Proceedings

Copyright Notice:

This material may be protected by copyright law (U.S. Code, Title 17). Researchers are liable for any infringement. For more information, visit www.mnhs.org/copyright.

Version 3
August 20, 2018

#465 Pollution Control Agency/ Hazardous Waste Rules

RULES REVIEW CHECKLIST

DATE RULES RECEIVED 9-7-78 Temporary Rule _____

Resubmitted and Received _____

DUE DATE 9-27-78

a. Returned to Agency w/o filing w/Secy of State 9/27
b. Approved _____ Date Sent Back to Agency _____

- -

1. Rules as Adopted ✓
2. Rules as Proposed ✓
3. Certificate of Board's Authorizing Resolution, where applicable ✓
4. Order for Hearing ✓
5. Notice of Hearing ✓
   (i) Sufficiency ✓
6. Secretary of State's List ✓
7. Certificate of Acquisition of Secretary of State's List ✓
8. Affidavit of Mailing ✓
   (i) At least 30 days prior to hearing ✓
9. Statement of Need and Evidence ✓
10. Hearing Examiner's Report ✓
11. Agency's Findings of Fact ✓
12. Certificate of Board's Resolution Adopting Rules, where applicable ✓ Amended Resolution ✓
13. Order Adopting ✓ Amended Order ✓
14. Report of Chief Hearing Examiner ✓
    (i) Finding of No Substantial Change Filed by S.C
    (ii) Permission to Incorporate by Reference, where applicable N.A
15. Certificate of Compliance with Rulemaking Procedures ✓
16. Copy of Notice of Intent to Solicit Outside Opinion, where applicable N.A.
17. Petition by Public, where applicable N.A.

File No. 465

465

Attorney General

Alan R. Mitchell
Special Assistant
Attorney General

September 27, 1978

Lee E. Sheehy
Special Assistant
Attorney General

296-1288

In the Matter of the Proposed Adoption of Regulations for Identification, Labeling, Classification, Storage, Collection, Transportation, and Disposal of Harzardous Waste and of Amendments to Minnesota Regulation SW 1, 2, 3, 4, 6, and 7

The above-captioned rules have not been approved by this office or filed with the Secretary of State. After consideration of the matters raised below and appropriate agency action, if any, the agency may resubmit these rules for review and approval by this office. I have retained copies of all relevant documents in this matter should you wish to discuss this matter with me.

These rules are being returned for the following reasons:

1. Incorporation By Reference: HW 1 B (29) and (44) appear to contain incorporations by reference which must be approved by the Chief Hearing Examiner pursuant to Minnesota Statutes § 15.0412, Subd. 4 (1977 Supp.).

2. Variance: HW 1 F permits through use of the word "may" the agency to deny a variance to an individual who has made a showing of "undue hardship and promot(ing) the effective and reasonable application and enforcement of these regulations." In theory, the rule would permit agency differentiation among applicants who have made such showings while not establishing by rule the criteria upon which such discrimination would occur. The word "shall" must be used and additional criteria to be considered, if any, must be established by rule.

3. "Public Hearing" Requirement Under HW 2 (H)(2): The reference to "public hearing" is vague. The "Staff Memorandum in Support of Proposed Findings of Fact and Conclusions" characterized the proceeding as a contested case. Id. at p. 6-7. The vagueness in the reference to "public hearing" must be clarified. Substitution of the phrase "contested case pursuant to Minnesota Statutes § 15.0418 et seq. " would be a sufficient clarification.

4. HW 8 C (3)(d): The agency failed to make any affirmative presentation of fact establishing need and reasonableness for the "waste code number." While the agency's implementation of such a concept may be

universally supported and most commendable, such action must be taken on the record with an affirmative presentation supporting the action with an opportunity for challenge by the public.

5. HW 9: This rule fails to establish criteria upon which submitted county ordinances shall be reviewed and approved. This deficiency must be corrected.

6. Incorrect Citation: HW 1 D (1) appears to be an incorrect citation. Appendix A reveals the following number: "ASTM 03243-76" while HW 1 D (1) shows "ASTM D3243-73". If the citation is incorrect, it should be corrected. Citations to that appendix also appear HW 2 E (4).

Other than the above-discussed matters, the remaining rules, or severable portions thereof, are approved as to form and legality.

LES:mb

Attachment

cc: Duane Harves

STATE OF MINNESOTA
OFFICE OF THE ATTORNEY GENERAL

Address Reply To:
OFFICE OF ATTORNEY GENERAL
MINNESOTA POLLUTION CONTROL AGENCY
1935 W. County Road B2
Roseville, Minnesota 55113
612/296-7342

October 4, 1978

Lee Sheehy
Special Assistant
Attorney General
Room G19K Administration
Building
50 Sherburne Avenue
St. Paul, Minnesota 55155

RE: Hazardous Waste Rules

Dear Mr. Sheehy:

The Minnesota Pollution Control Agency considered matters raised in your memorandum of September 27, 1978, at its October 3, 1978, meeting and took action with respect thereto. Accordingly, the Agency is resubmitting the rules to you for your review and approval.

I have enclosed the documents that must be filed with the Secretary of State, including the most recent Order Adopting Rules and Certificate of Agency's Authorizing Resolution. The Order indicates the changes made by the Agency in response to your report.

Please contact me if you need any additional information.

Very truly yours,

Alan R. Mitchell

Alan R. Mitchell
Special Assistant
Attorney General

Enclosures

ARM/mw

① Drop by w/
② Variance → rely on statute
③ Waste Code # → out
④ Criteria for Hazards for city and
⑤ Write to Com

AN EQUAL OPPORTUNITY EMPLOYER

STATE OF MINNESOTA
OFFICE OF HEARING EXAMINERS

FOR THE POLLUTION CONTROL AGENCY

IN THE MATTER OF THE PROPOSED ADOPTION OF RULES GOVERNING THE IDENTIFICATION, LABELLING, CLASSIFICATION, STORAGE, COLLECTION, TRANSPORTATION AND DISPOSAL OF HAZARDOUS WASTES AND OF AMENDMENTS TO MINNESOTA REGULATIONS SW 1, 2, 3, 4, 6 AND 7.	REPORT AND MEMORANDUM OF THE CHIEF HEARING EXAMINER

The above-entitled matter was submitted to the Chief Hearing Examiner for review pursuant to the provisions of Minn. Stat. § 15.052, Subd. 4, and Minn. Rule HE 107, on Wednesday, July 26, 1978. This review is limited to ensuring compliance with Minn. Stat. § 15.0412, Subd. 4, and to determine whether or not the rules as finally adopted are substantially different from those proposed prior to hearing.

Based upon a review of the record, the Chief Hearing Examiner makes the following:

FINDINGS OF FACT

1. A Notice of Hearing was published in the State Register and mailed to all persons who had registered with the Secretary of State at least 30 days prior to the first day of hearing.

2. The full text of the proposed rule and amendments to existing rules were published at least 30 days prior to the first day of hearing.

3. All documents required to be filed prior to the hearing pursuant to Minn. Rule HE 103 were filed more than 25 days prior to the hearing.

4. The Pollution Control Agency (hereinafter "PCA") amended the proposed rules during the hearing process and all interested persons in attendance had an opportunity to comment on the amendments during the hearing and following the hearing for 20 calendar days, the final version of the amended rules being filed with the Hearing Examiner on March 9, 1978. The

Hearing Examiner wrote his report solely on the basis of the March 9 rules as amended submission.

5. The Hearing Examiner issued his report on May 25, 1978, and the PCA adopted the rules on July 25, 1978, adopting in part the Hearing Examiner's report as its Order and issued its own Findings of Fact on July 25, 1978.

6. Neither the PCA's Order Adopting Rules nor their Findings of Fact and Conclusions indicate that any of the rules were further amended or changed in any way from those submitted on March 9, 1978, with one exception being HW-2.H.2.

7. There have been at least 13 separate changes made in the rules between the issuance of the Hearing Examiner's report and the date of adoption of the rules by the PCA not mentioned in their Findings. The changes and the results are as follows:

HW-1.G. The language has been changed to speak solely to preemption by federal law. The original language (added during the hearing process) was much broader in that it related to any act required or prohibited by the United States Code or any duly adopted and valid regulation thereunder. The change has the effect of narrowing considerably an exception which was discussed extensively at public hearing. The Chief Hearing Examiner agrees with the PCA, as did the Hearing Examiner (see Hearing Examiner report Finding 35), that the new language is a correct statement of the law; nevertheless, it changes the rule without providing an opportunity for public discussion.

HW-2.C.12. In this rule, the word "may" has been changed to "shall" which has the effect of removing some agency discretion. Such a change would probably have been required by the Attorney General upon review. The change affects only the agency and would probably have been supported by all persons at the hearing.

HW-4.C.1.d. Language has been added to this rule which has the effect of clarifying the rule by stating the criteria which the agency uses in determining when to approve a site monitoring system. The addition does not alter the meaning of the rule or affect any persons as the rule as a whole (HW-4) consis-

tently speaks of the effects of such facilities on the soil, groundwater and air.

HW-4.C.3.f.(2). In this rule, the agency has deleted a provision which had been put in the rules at public hearing and which remained in the rules as submitted to the Hearing Examiner on March 9, 1978. The provison would have exempted used crankcase oil storage tanks of less than 5,000 gallons (18,927 liters) from the requirement of equipping the tanks with a vapor recovery system. This exemption was discussed at hearing during the testimony of James Kinsey on February 3, 1978, (see Transcript at page 2973) and the exact language was proposed and put into the record that day by Kinsey (see Transcript at page 2981). The exemption was aimed at those persons participating in the oil recycling program.

HW-5.B.12. In its final submission to the Hearing Examiner, agency staff amended this rule by deleting the words "transported or". The rule as adopted puts the words back into the rule. As this rule pertains to the loading of hazardous wastes, as adopted, it fails to recognize the problem that is pointed out in the staff submission received March 9, 1978. Also, the change was also included in the final rule submission alluded to in Finding 4 above.

HW-5.E.5. In this rule, the words "in the event the transporter does not" have now been added to the rule for the first time. This particular rule places responsibility for cleaning spills on the transporter and the generator. The added language may appear to be for purposes of clarification but may have a substantial effect on the liability of the transporter to the generator. As there is no finding by the PCA nor any record to rely on, it cannot be stated with certainty what effect this could cause. This could only be determined at the present time by those involved in generating or transporting hazardous wastes, and at a public hearing.

HW-6.E.2.c. Language has been added to this rule for obvious clarity and uniformity much as was found in HW-4.C.1.d. and would have the same effect.

HW-6.H. In this rule, as in HW-2.C.12., a "may" has become "shall" and would have the same effect.

HW-8.C.3.d. The change in this rule gives the Director of the PCA authority to designate a "waste code number" which number could then replace the requirement that the shipping papers include "The approximate chemical composition of the waste." Again, the Chief Hearing Examiner is unable to find anything in the record even mentioning a "waste code number". In reading the rules as a whole, it is evident that in the case of a "spill", people must know immediately the composition of the chemical in order to clean it up. As there is no provision relating to how or where these "waste codes" will be published or kept or how one would get access to them in an emergency situation, the ramifications of such a rule should be obvious. As the provision was not discussed or previously proposed, groups such as environmentalists have not had an opportunity to react.

HW-8.E.6. This rule is entirely new and was not proposed in any submissions prior to the time the final rules were adopted by the PCA Board. HW-9.C.2. assumes, by its language, that a county ordinance will provide for shipping papers. However, nowhere is there a rule which requires it. This rule again assumes that the ordinance will contain those provisions. The Chief Hearing Examiner has been unable to find any discussion either in the hearing record or in written submissions relating to this particular rule.

HW-9.A. This "Applicability" rule has been changed to give specific authority to the PCA Board for reviewing, denying, suspending and reversing county action. It has such implied authority in following rules. While it adds nothing new, it was never discussed prior to final adoption.

HW-9.D.1. In this rule, language has been stricken and new words inserted. The language originally published was never amended during the hearing process and would seemingly

require counties to report "all actions" relating to hazardous waste licenses and permits to the PCA. This could include all routine inspections and other investigations. As presently before the Chief Hearing Examiner, the rule relates solely to reports relating to the approval or review of licenses or permits. As this change was never raised before, there has been no testimony in the record by any potential interest groups who may favor a more complete reporting by the counties.

HW-9.D.3. The changes made in this rule are clarifying amendments and do make the rule consistent with the rest of the rules.

8. The original Notice of Hearing and rules were first published at 2 State Register 521. Subsequently the PCA published three notices of continuation of the hearing at 2 State Register 986, 2 State Register 1272 and 2 State Register 1412. At no time were the amendments which were presented by the PCA at the February 3 hearing published.

9. Amendments proposed to HW-2.B.2. did two things. First, "Arsenic and its compounds", and "Chromium and its compounds" were added to the list of components which, if contained in a waste, would cause the waste to be labeled as a hazardous waste; thus, requiring the generator to comply with these rules. Second, the allowable concentration limits for Aldrin, Chlordane, DDT, PCB and Toxaphene were lowered. In the first instance, persons discharging waste containing any of the two added compounds would have had no reason to attend the hearings for the original rules as published did not contain them. The same can be said for persons whose wastes contained concentrations of the chemicals within the published limits but now exceeding the amended limits.

10. There were originally very stringent requirements in HW-2.D. relating to evaluation of wastes. Amendments to HW-2.D.2. and 4. have lessened these requirements considerably without any showing, on the record, other than 15 lines of transcribed

testimony of Mr. Kinsey (see, Transcript at page 2928), of the need or reasonableness of the lesser requirements. Again, groups which supported the more stringent requirements would have no notice of the proposed change unless they had sat through all 28 days of hearing. In reviewing the transcripts, the only persons appearing on the record at the February 3 hearing other than PCA personnel, the Hearing Examiner and the court reporter were representatives of industry.

11. The amendments proposed at the February 3 hearing to rule HW-3. primarily reflect the amendments discussed in Finding 10 above as they relate to the lessening of the evaluation requirements. Again, groups supporting the more stringent requirements would have had no notice.

12. The only presentation by the PCA supporting the amendments proposed at the February 3 hearing is contained in Exhibit 43, which was read into the record by Mr. Kinsey. This statement contains little, if any, facts showing either the need for or the reasonableness of the proposed amendments. Rather, it is merely a statement which tells what the amendments do and what will result from their adoption.

Based upon the foregoing Findings of Fact, the Chief Hearing Examiner makes the following:

CONCLUSIONS

1. The Pollution Control Agency has failed to comply with the provisions of Minn. Stat. § 15.0412, subd. 4, in that it did not, at the hearing, make an affirmative presentation of facts establishing the need for and reasonableness of the amendments proposed on February 3, 1978, nor of the amendments discussed in Finding 7 above.

2. Of the amendments added by the PCA after the record closed and as discussed in Finding 7 above, the amendments to rules HW-1.G., HW-4.C.3.f.(2)., HW-5.E.5., HW-8.C.3.d., HW-8.E.6., and HW-9.D.1. are substantially different from the rules which were proposed at the public hearing in that they affect classes of persons who had no opportunity to comment on the amendments as

they were never raised at any hearing, they make major substantive changes without allowing an opportunity for reaction at any hearing and in certain instances, result in a rule fundamentally different from those contained in the Notice of Hearing.

3. The amendments to rule HW-2.B.2. discussed in Finding 9 above, result in a rule substantially different from the rule as originally proposed in that it affects classes of persons not represented at the previous hearing.

4. The amendment proposed to rules HW-2.D.2. and 4., and HW-3., as discussed in Findings 10 and 11 above, result in rules which are substantially different from the rule as originally proposed in that they affect classes of persons not represented at the hearing, make major substantive changes that were not raised by the original Notice of Hearing in such a way as to invite reaction at the hearing and result in rules fundamentally different from that contained in the Notice of Hearing.

NOW, THEREFORE, pursuant to the provisions of Minn. Stat. § 15.052, subd. 4, and Minn. Rule HE 108, the Pollution Control Agency shall either withdraw the proposed final rules discussed in the Conclusions above or reconvene the rule hearing.

Dated: August 3, 1978.

DUANE R. HARVES
Chief Hearing Examiner

M E M O R A N D U M

Rules adopted by state agencies must be based upon the record of a public hearing at which the agency must make an affirmative presentation of facts establishing the need for and reasonableness of the rule proposed for adoption. Prior to the public hearing, the agency must give notice of its intended action. The agency must afford all affected interests an opportunity to participate. (See, Minn. Stat. § 15.0412, subd. 4.)

The record of the hearing must support the rules as adopted [see, Minn. Rule Atty Gen 303(c)]. Findings of Fact must contain that which the agency finds to be fact which supports the reasons or need for the rules adopted [see, Minn. Rule Atty Gen 302(h)].

The record in this case shows that there was strong opposition to the originally proposed rules. During the hearing process, the PCA and participating industry came to an agreement whereby industry would withdraw its opposition if the PCA made certain amendments. The PCA proposed these amendments at hearing on February 3, 1978, through a prepared statement read into the record by Mr. Kinsey. The statement, for the most part, merely explains the changes, but gives no facts to support the need or reasonableness of the changes.

The rulemaking process in Minnesota has been established to provide for the exact "give and take" which occurred in this hearing. However, merely reaching an agreement with the public does not relieve the agency from its burden of making an affirmative presentation of facts at the hearing.

The public and the Hearing Examiner relied on the PCA's March 9, 1978, submission of the amended rules in preparing comments and the Hearing Examiner's report. Where the Hearing Examiner recommended changes to that submission, he made specific findings. The PCA spoke to those same changes in its findings. PCA Staff prepared proposed findings for the Board which were

evidently sent to those persons who actively particiated in the hearing process and to the Hearing Examiner, as the Hearing Examiner received a copy of a response to those proposed findings. Nowhere in the proposed findings is there any findings relating to the 13 changes made in the rules and which were discussed in Finding 7 above. As examples, one of the changes, the "waste control number", is an entirely new concept which could not be found anywhere in the record by the Chief Hearing Examiner. One deletion, the exemption from the requirement of having a vapor recovery system on 5,000 gallon used crankcase oil storage tanks, was part of the agreement which led industry to withdraw its objection. In other words, the PCA continued to change its rules, after the record closed, and based on no evidence or facts to support the changes, and gave no notice to anyone, in violation of the Minnesota Administrative Procedure Act and the rules of the Attorney General.

When creating the Office of Hearing Examiners in 1975, the legislature directed the Chief Hearing Examiner to adopt procedural rules which were to specifically include provisions relating to recessing and reconvening new hearings when the proposed final rule of an agency is substantially different from that which was proposed (see, Minn. Stat. § 15.052, subd. 4). That section, together with the notice and other requirements of Minn. Stat. § 15.0412, subd. 4, are clear indications of the legislature's intent that state agencies may not legislate through rulemaking unless and until they have given notice to the public of their intentions and have provided an opportunity for the public to be heard. The record shows that the PCA was fully aware of these provisions (see, Transcript Volume XXIV), but has chosen not to follow them. This was an unusual hearing in that the final rules submitted on March 9, some of which contained substantial changes, were the result of a negotiated agreement, but they were relied upon by those members of the public who participated throughout. As to them, any substantial changes to

the amended rules, such as the significant deletion mentioned above, would clearly be to their detriment.

Lastly, while it is outside the purview of the Chief Hearing Examiner's review, it should be pointed out that the term "regulation", as used throughout these rules, was stricken from the Minnesota Administrative Procedure Act in 1975, in favor of the term "rule".

D.R.H.

CERTIFICATE OF BOARD'S
AUTHORIZING RESOLUTION

I, Sandra S. Gardebring, do certify that I am the Executive Director of the Minnesota Pollution Control Agency, an Agency duly authorized under the laws of the State of Minnesota, and that a resolution was adopted at the meeting of the Agency properly caled on the 3rd day of October, 1978: that a quorum was present at said meeting; that the resolution has not been rescinded or modified; and that the resolution provided:

BE IT RESOLVED that the hazardous waste rules adopted by the Minnesota Pollution Control Agency Board on July 25, 1978, and amended on August 29, 1978, are hereby further amended in the following respects:

1. HW 1.B.29 is amended to read:

29. Pesticides: any substance or mixture of substances intended for preventing, destroying, repelling, or mitigating any pest, and any substance or mixture of substances intended for use as a plant regulator, defoliant, or dessicant.

2. H.W.2.D.1. is amended to read:

1. ASTM D3243-76 (Appendix A).

3. A new section HW 1.D.11. is added to read:

11. United States Department of Interior inland fresh water wetland types 3, 4, and 5 (Appendix K).

4. HW 1.F. is amended to read:

F. Variances. Any person may apply for a variance from any requirement of these hazardous waste rules. Such variance shall be applied for and acted upon by the Agency in accordance with Minn. Stat. §116.07 subd. 5 and other applicable statutes and rules.

5. The last sentence in section HW 2.H.2. is amended to read:

The Agency shall hold a contested case hearing pursuant to Minnesota Statutes §§15.0418 et seq. upon request of the person producing the waste.

6. The ASTM Test Method in HW 2.E.4.b. is amended to read

(ASTM D3243-76).

7. HW 8.C.3.d. is amended to read:

d. The approximate chemical composition of the waste.

8. A new sentence is added to HW 9.B.1. to read as follows:

The Agency shall approve a county ordinance that embodies the standards and requirements set forth in these hazardous waste rules.

9. Appendix K is added to read as follows:

APPENDIX K

TYPE 3 - INLAND SHALLLOW FRESH MARSHES. The soil is usually waterlogged during the growing season; often it is covered with as much as 6 inches or more of water. Vegetation includes grasses, bulrushes, spikerushes, and various other marsh plants such as cattails, arrowheads, pickerelweed, and smartweeds. Common representatives in the North are reed, whitetop, rice cutgrass, carex, and giant burreed. In the Southeast, maidencane, sawgrass, arrowhead, and pickerelweed are characteristic. These marshes may nearly fill shallow lake basins or sloughs, or they may border deep marshes on the landward side. They are also common as seep areas on irrigated lands.

Marshes of this type are used extensively as nesting and feeding habitat in the pothole country of the North Central States and elsewhere. In combination with deep fresh marshes (Type 4), they constitute the principal production areas for waterfowl. Florida and Georgia are the only States where the majority of the shallow fresh marshes are considered to be of lesser importance to waterfowl. Florida alone contains more than 2 million acres of this type.

Flyway area:	Acres
1. Pacific north	33,700
2. Pacific south	64,100
3. Central north	817,600
4. Central south	84,600
5. Mississippi north	758,500
6. Mississippi south	15,300
7. Atlantic north	35,900
8. Atlantic south	2,159,900

TYPE 4 - INLAND DEEP FRESH MARSHES. The soil is covered with 6 inches to 3 feet or more of water during the growing season. Vegetation includes cattails, reeds, bulrushes, spikerushes, and wildrice. In open areas, pondweeds, naiads, coontail, watermilfoils, waterweeds, duckweeds, waterlilies, or spatterdocks may occur. Waterhyacinth and waterprimroses form surface mats in some localities in the Southeast. These deep-marshes may almost completely fill shallow lake basins, potholes, limestone sinks, and sloughs, or they may border open water in such depressions.

Deep fresh marshes constitute the best breeding habitat in the country, and they are also important feeding places. In the Western States they are heavily used by migrating birds, especially diving ducks. Florida and Texas are the only States in which the vast majority of these marshes are not rated as being of primary importance to waterfowl.

Flyway area:	Acres
1. Pacific north	92,500
2. Pacific south	62,500
3. Central north	686,500
4. Central south	46,800
5. Mississippi north	427,700
6. Mississippi south	21,500
7. Atlantic north	25,700
8. Atlantic south	984,100

TYPE 5 - INLAND OPEN FRESH WATER. Shallow ponds and reservoirs are included in this type. Water is usually less than 10 feet deep and is fringed by a border of emergent vegetation. Vegetation (mainly at water depths of less than 6 feet) includes pondweeds, naiads, wildcelery, coontail, watermilfoils, muskgrasses, waterlilies, spatterdocks, and (in the south) water-hyacinth.

In the pothole country of the North Central States, Type 5 areas are used extensively as brood areas when, in midsummer and late summer, the less permanent marshes begin to dry

out. The borders of such areas are used for nesting throughout the Northern States. Where vegetation is plentiful, they are used in all sections of the country as feeding and resting areas by ducks, geese, and coots, especially during the migration period.

Flyway area:	Acres
1. Pacific north	40,500
2. Pacific south	51,900
3. Central north	676,800
4. Central south	87,100
5. Mississippi north	1,000,200
6. Mississippi south	186,500
7. Atlantic north	12,000
8. Atlantic south	541,500

BE IT FURTHER RESOLVED that the Findings of Fact and Conclusions adopted by the Board on July 25, 1978, shall remain in full force and effect.

BE IT FURTHER RESOLVED that Joseph F. Grinnell, Chairman of the Agency, and Sandra S. Gardebring, Executive Director, be and hereby are authorized to sign an Order Adopting Rules in this matter.

IN WITNESS WHEREOF, I have hereunto subscribed my name this 3rd day of October, 1978.

Sandra S. Gardebring
Executive Director

Subscribed and sworn to before me
this 3rd day of October, 1978:

NOTARY PUBLIC-MINNESOTA
RAMSEY COUNTY
My Comm. Expires Oct. 24, 1983

Mary E. Wyatt
Notary Public

SW 1 APPLICABILITY, DEFINITIONS, AND GENERAL CONDITIONS FOR SOLID WASTE COLLECTION, TRANSPORTATION AND DISPOSAL, SEVERABILITY AND VARIANCES.

Paragraph (12) of the Definition is amended to read:

(12) Special Infectious Waste. Waste originating from the diagnosis, care or treatment of a person or animal that has been or may have been exposed to a contagious or infectious disease. Special infectious waste includes, but is not limited to,

(a) All wastes originating from persons placed in isolation for control and treatment of an infectious disease.

(b) Bandages, dressings, casts, catheters, tubing, and the like, which have been in contact with wounds, burns, or surgical incisions and which are suspect or have been medically identified as hazardous.

(c) All anatomical waste, including human and animal parts or tissues removed surgically or at autopsy.

(d) Laboratory and pathology waste of an infectious nature which has not been autoclaved.

(e) Any other waste, as defined by the State Board of Health, which, because of its infectious nature, requires handling and disposal in a manner prescribed for (a) through (d).

Paragraph (13) of the Definition is omitted.

SW 2 SOLID WASTE STORAGE.

Paragraph (4) is omitted.

SW 3 COLLECTION AND TRANSPORTATION OF SOLID WASTE

Paragraph (4) is omitted.

SW 4 INTERMEDIATE AND FINAL DISPOSAL OF SOLID WASTE

SW 4 is amended to read:

Open burning is prohibited at all intermediate and final solid waste disposal sites, except as shall be allowed by any regulations of the Agency now or hereafter adopted.

Solid waste shall not be deposited at any intermediate or final solid waste disposal site in such a manner that material or leachings therefrom may cause pollution of ground or surface waters.

A person shall make an intermediate or final disposal of any solid waste, only at a site or facility for which a permit has been issued by the Agency unless otherwise provided by these regulations. Permits shall not be required for sites used for the disposal of solid waste from only a single family or household, a member of which is the owner, occupant or lessee of the property, under these regulations, but these shall be operated and maintained in a nuisance-free, pollution-free and aesthetic manner consistent with the intent of these regulations.

SW 6 SANITARY LANDFILL

Paragraph (2) (r) is amended to read:

(r) A permanent sign, identifying the operation and showing the permit number of the site, and indicating the hours and days the site is open for public use, rates, the penalty for nonconforming dumping, and other pertinent information, shall be posted at the site entrance.

Paragraph (2) (v) is amended to read:

(v) The following shall not be acceptable for deposit in sanitary landfills execpt in amounts normal in household waste:

(i) Liquids

(ii) Any of the following: digested sewage sludges, lime sludges, grit chamber cleanings, bar screenings and other sludges, unless approved by the Director. Approval will be based on consideration of such factors as chemical composition, free moisture content and workability.

(iii) In no case will special infectious waste, raw sewage sludge, raw animal manure or spetic tank pumpings be acceptable.

(iv) Other substances that may be deemed unacceptable by the Agency.

Paragraph (2) (w) is omitted.

Paragraph (3) (c) (ii) is amended to read:

(ii) A Development Plan of the site and immediately adjacent area

showing dimensions, contours, at contour intervals of two feet or less, soil boring locations with surface elevations and present and planned pertinent features, including but not limited to roads, screening, buffer zone, fencing, gate, shelter and equipment buildings, surface water diversion and drainage, and water monitoring system. The development plan shall show progressive development of trench and/or area fills and any phase construction. The scale of the development plan shall not be greater than 200 feet per inch.

The development plan shall include consideration of the ultimate land use, for example, pre-planned building islands, not to be used for landfilling or refuse.

SW 7 INCINERATION

The first paragraph is amended to read:

This regulations applies only to existing and new incinerators having a capacity greater than 6,000 pounds per hour: All incinerators shall be designed and operated in a manner to conform to emission limitations of Regulation APC 7 and other Air Pollution Control Regulations of the Agency now or hereafter adopted. All incinerators shall have adequate disposal of liquid wastes. Any discharge to surface or ground waters of the state must meet the Agency's regulations of water quality or effluent standards now or hereafter adopted. Residue from all incinerators must be disposed of in conformance with these regulations.

CERTIFICATE OF BOARD'S
AUTHORIZING RESOLUTION

I, Sandra S. Gardebring, do certify that I am the Executive Director of the Minnesota Pollution Control Agency, an Agency duly authorized under the laws of the State of Minnesota, and that a resolution was adopted at the meeting of the Agency properly called on the 29th day of August, 1978; that a quorum was present at said meeting; that the resolution has not been rescinded or modified; and that the resolution provided:

> BE IT RESOLVED that the hazardous waste rules adopted by the Board on July 25, 1978, are hereby amended in the following respects:
>
> 1. The words "transported or" are deleted from HW 5.B.12.
>
> 2. The phrase "in the event the transporter does not" is deleted from the end of HW 5.E.5.
>
> BE IT FURTHER RESOLVED that the Findings of Fact and Conclusions adopted by the Board on July 25, 1978, shall remain in full force and effect.
>
> BE IT FURTHER RESOLVED that Joseph F. Grinnell, Chairman of the Agency, and Sandra S. Gardebring, Executive Director, be and hereby are authorized to sign an Order Adopting Rules in this matter.

IN WITNESS WHEREOF, I have hereunto subscribed my name this 30th day of August, 1978.

Sandra S. Gardebring
Executive Director

Subscribed and sworn to before me
this 30th day of August, 1978:

WILLIAM DONOHUE
NOTARY PUBLIC – MINNESOTA
RAMSEY COUNTY
My Commission Expires April 29, 1982

Notary Public

STATE OF MINNESOTA

POLLUTION CONTROL AGENCY

IN THE MATTER OF THE PROPOSED ADOPTION OF RULES BY THE POLLUTION CONTROL AGENCY GOVERNING THE IDENTIFICATION, LABELING, CLASSIFICATION, STORAGE, COLLECTION, TRANSPORTATION AND DISPOSAL OF HAZARDOUS WASTE AND OF AMENDMENTS TO MINNESOTA REGULATIONS SW 1,2,3,4,6, AND 7.

STATEMENT OF NEED

The above captioned rules governing the identification, labeling, classification, storage, collection, transportation and disposal of hazardous waste are not amendments to existing rules of the Pollution Control Agency. The amendments to Minnesota Regulations SW 1,2,3,4,6, and 7 are amendments to existing rules of the Pollution Control Agency. The last time Minnesota Regulations SW 1,2,3,4,6, and 7 were amended was September 26, 1973.

The need to adopt these hazardous waste regulations arises because of the great harm caused by the improper identification, labeling, classification, storage, collection, transportation, treatment and disposal of hazardous wastes. These improper methods have resulted in human death and illness, contaminated wells and groundwater, deaths of domestic animals, wildlife and aquatic life, harmful congenital effects, contaminated soil, polluted surface water and polluted air. Unless hazardous wastes are properly taken care of, these deleterious effects will continue.

Hazardous wastes are wastes that can cause harm when they come into contact with people and with the environment under normal conditions of routine waste management. Routine waste management is generally considered to be either disposal at a sanitary landfill or discharge into a municipal sewer system. A waste should be classified as hazardous if it cannot be safely handled by a given routine waste management technique, even if it may be safely handled by another. This is because once a waste is classified as nonhazardous there is generally no hazard evalution made to determine which routine waste management technique to use. The two factors most often used to decide which way a waste should be routinely disposed of are convenience and the physical state of the waste.

Explosive and flammable wastes may cause the death or severe injury of persons handling them or of persons compacting them at sanitary landfills. They also pose a hazard of explosion and fire if discharged into a sanitary sewer. Oxidative wastes can create similar hazards. Irritative and corrosive wastes pose several dangers to persons coming into contact with them. They corrode and leak out of containers, vehicles, pipes, and other waste-handling equipment. Toxic wastes pose a danger both from direct contact, ingestion and inhalation and from leachate that is formed from the waste and that may subsequently come

in contact with the groundwater. Hazardous wastes and their leachates can contaminate and render water supplies unusable. Bio-concentrative wastes are concentrated in the food chain and at these higher concentrations produce harmful results. Carcinogenic, mutagenic and teratogenic wastes cause cancer, mutations and birth defects in people and animals.

Unfortunately, hazardous wastes are not being taken care of properly. People have been hospitalized and water supplies damaged and eliminated because wells were polluted by hazardous wastes. Hazardous wastes entering streams have killed all life for miles downstream. A sanitary landfill employee has been killed compacting flammable hazardous wastes. Animals have been killed and people have become ill both because of improper disposal and because of improper uses of hazardous wastes, such as using it for dust control. Hazardous wastes escaping in gaseous or vapor form have caused illness and even fatal results in people.

Hazardous wastes must, therefore, be taken care of in a safe and appropriate fashion. This generally entails preventing contact, to the greatest extent possible, with people and the environment. Any such contact must be under carefully controlled conditions. Hazardous wastes must be maintained in situations where the potential harm they pose will the the least amount possible

Initially, it is essential to determine what wastes are hazardous and what wastes are not. Therefore, it is necessary for a generator to evaluate most of his wastes to see whether they are hazardous.

If a waste is hazardous, the generator will need to know enough about it to arrange for storing, transporting and disposing of it in a safe and pollution-free manner. Therefore, it is necessary for the generator to determine the characteristics of his waste, and then, decide on the best course of action for handling it. The generator must keep track of his waste in order to know what happens to it. Then if it is not handled as the generator anticipated, the generator will be able to take corective action.

On occasion hazardous waste has caused problems because the persons handling it or using it were unaware of its nature. This can be alleviated both by the generator keeping track of his waste and by alerting other persons to its nature. Containers of hazardous waste need to be labeled as to the contents and shipping papers with information about its composition, properties, and intended management should accompany all shipments of hazardous waste.

Proposed regulation HW-2 is needed because it sets out the criteria that determine what is a hazardous waste. This, coupled with the provision of HW-2 for evaluating a waste provides the mechanism by which a generator makes a determination of whether his waste is hazardous. The Agency needs to receive the results and substance of this evaluation to enable the Agency to check to see if it was properly done.

Proposed regulation HW-3 is needed so that the necessary information about the hazardous waste and its management will be obtained. The requirements for disclosure to the Agency and for labeling are necessary to inform the Agency and persons coming into contact with the waste of its hazardous nature.

Proposed regulation HW-4's requirements for the location, operation and closure of a hazardous waste facility are necessary to prevent and abate pollution and other hazards that might emanate from the facility. A facility that is located in certain types of areas presents less of a threat than if located in other areas. The characteristics of a site itself will often provide varying amounts of protection. If a facility operator is prepared for an emergency, its harmful effects may be held to a minimum. The operator must accept only those wastes that his facility is capable of handling or else the wastes will continue to pose the threat occasioned by their hazardous nature. The requirements for hazardous waste storage are necessary to prevent the escape of the waste into the environment and to provide protection for the waste against any elements that might trigger or exacerbate its hazardous nature. Records are needed to insure that hazardous wastes are being handled correctly and to aid in the performance of any corrective action that might be necessary. The closure of a hazardous waste facility must be in such a manner that either all hazardous waste is properly removed or that appropriate protection is provided against all remaining hazardous waste for as long as it may pose a threat.

Proposed regulation HW-5 is needed to prevent the entry of

hazardous waste into the environment and to prevent harmful contacts with people while the waste is being transported. Transporters need to be registered so that the Agency in concert with the Minnesota Department of Transportation can assure that trained personnel knowledgeable in the transportation of hazardous waste are used to transport hazardous waste.

Proposed regulation HW-6 is necessary to set out the conditions under which a permit may be issued and retained. Permits for hazardous waste facilities are a necessary mechanism for keeping track of the facilities and for ensuring that they comply with pertinent requirements. The conditions of a permit are then necessary to prevent and abate pollution and other potential threats posed by the hazardous waste at the facility.

Proposed regulation HW-7 sets out the information that is needed in a permit application. This information is necessary to determine whether the facility's engineering features, the characteristics of the site at which the facility will be located, and the proposed method of operation are adequate to protect against the threats posed by the hazardous wastes to be handled there.

Proposed regulation HW-8 requires shipping papers to accompany hazardous wastes. Shipping papers are necessary if the generator and, when appropriate, the Agency are to keep track of hazardous wastes.

Proposed regulation HW-9 pertains to the relationship of the Agency with the counties. The regulation is necessary to enable the Agency to perform its statutory review of county actions. It is also necessary to curtail duplication of Agency and county efforts in instances where duplication is not necessary for the Agency to achieve the results sought by these regulations.

Proposed regulation HW-10 is necessary to minimize the harm that will result if hazardous wastes are spilled and to provide a mechanism for the expeditious disposal of certain spilled waste.

The amendments to regulations SW-1 through SW-7 delete provisions relating to hazardous waste. The subject matter of these proposed-to-be deleted provisions is covered with greater specificity by the proposed regulations HW-1 through HW-10. There is no need to retain these former regulations, and retaining them might create confusion.

The Agency is authorized, and indeed mandated, by Minnesota Statutes §116.07 and §473.823 (1976) to adopt rules for the identification, labeling, classification, storage, collection, transportation, treatment, and disposal of hazardous waste. The Agency is also authorized by Minnesota Statutes §115.03 subd. 1(e) (1976) to adopt rules relating inter alia to the storage, deposit and discharge of any waste.

Dated: September 29, 1977

Sandra S. Gardebring
Executive Director
Minnesota Pollution Control Agency

STATE OF MINNESOTA

OFFICE OF THE ATTORNEY GENERAL

Address Reply To:
OFFICE OF ATTORNEY GENERAL
MINNESOTA POLLUTION CONTROL AGENCY
1935 W. County Road B2
Roseville, Minnesota 55113
612/296-7342

September 7, 1978

Mr. Lee Sheehy
Special Assistant Attorney General
Department of Administration
Administration Building
St. Paul, Minnesota 55101

Re: In the Matter of the Proposed Adoption of Rules Governing the Identification, Labeling, Classification, Storage, Collection, Transportation and Disposal of Hazardous Waste and of Amendments to Minnesota Regulations SW 1, 2, 3, 4, 6 and 7

Dear Mr. Sheehy:

Enclosed for your review is the record in the above-entitled rulemaking proceeding. I have prepared three sets of the documents you need to file with the Secretary of State. Set A contains the originals of these documents when available, but some of the originals were entered into the record and are included with the Exhibits. Also, I have not duplicated the Affidavit of Mailing and the Secretary of State's list, which are in the record as Exhibit 2.

I have enclosed three copies of the September 19, 1977, State Register, which contains the regulations as proposed, and three copies of the regulations as adopted. There were no changes made in any of the Appendices so I have just attached the Appendices printed in the State Register to the final regulations.

I have enclosed two copies of the Hearing Examiner's Report and two copies of the Chief Hearing Examiner's Report. The Chief Hearing Examiner said that some portions of the rules were not supported by an affirmative presentation of facts demonstrating need and reasonableness and certain amendments to the proposed rules were substantial changes. The Agency disagrees with the Chief Hearing Examiner and included with the material is a memorandum in support of the Agency's position that the record demonstrates the need and reasonableness of the rules as adopted, no substantial changes were made in the rules as proposed, and the Chief Hearing Examiner's Report is advisory only. I have notified all parties who have requested notice that the record is being sent to the

Attorney General for review and I have mailed a copy of the Agency memorandum to them. You will find two orders adopting rules and two certificates of authorizing resolution since the Agency did make two changes in the rules in response to the Chief Hearing Examiner's Report. These changes are evident from the resolution and are discussed in the memorandum.

I have also prepared a folder which I entitled Miscellaneous. In this folder you will find a copy of a pre-hearing motion filed by one of the participants, a copy of my Statement of Compliance, and a copy of the final rules in the form necessary for printing in the State Register, with new language underlined and deleted language marked with a line through it. In addition, I have enclosed a copy of the material the staff sent to the Agency Board members on July 7, 1978, which includes a staff memorandum in support of proposed findings of fact and conclusions. This memorandum discusses some of the amendments made by the Agency on July 25 and is referenced in the September 7 Agency memorandum in support of the adoption of the rules. I have also enclosed in this folder, a copy of an Exhibit List and a copy of a Witness List, which may aid you in your review.

I believe this material comprises the complete record in this matter.

Very truly yours,

Alan R. Mitchell

Alan R. Mitchell
Special Assistant
Attorney General

Enclosures

ARM/jm

STATE OF MINNESOTA

COUNTY OF RAMSEY

MINNESOTA POLLUTION

CONTROL AGENCY

In the Matter of the Proposed Adoption of Regulations for Identification, Labeling, Classification, Storage, Collection, Transportation and Disposal of Hazardous Waste and of Amendments to Minnesota Regulations SW 1, 2, 3, 4, 6 and 7

NO. PCA 78-003-WS

ORDER ADOPTING RULES

The above-entitled matter came duly on for hearing before William Seltzer, Hearing Examiner, on the 24th day of October, 1977, at the Board Room of the Minnesota Pollution Control Agency (hereinafter MPCA), 1935 W. County Road B2, Roseville, Minnesota, commencing at approximately 9:30 a.m. Said hearing was duly recessed and reconvened at the following locations at the following approximate times: Room 83, State Office Building, St. Paul, Minnesota, on October 25, 1977, commencing at 9:30 a.m.; Board Room of the MPCA on October 26, 1977, commencing at 9:30 a.m.; Board Room of the MPCA on October 27, 1977, commencing at 9:30 a.m.; Board Room of the MPCA on October 28, 1977, commencing at 10:00 a.m.; Central Lecture Hall, Duluth Area Vocational Technical Institute, Duluth, Minnesota, on October 31, 1977, commencing at 9:30 a.m.; Lecture Hall of the Science and Health Building, Fergus Falls Community College, Fergus Falls, Minnesota, on November 2, 1977, commencing at 10:00 a.m.; Auditorium of the Rochester Public Library, Rochester, Minnesota, on November 4, 1977, commencing at 9:30 a.m.; Board Room of the MPCA on November 28, 1977, commencing at 10:00 a.m.; Board Room of the MPCA on November 30, 1977,

commencing at 9:30 a.m.; Board Room of the MPCA on December 5, 1977, commencing at 10:00 a.m.; Room 311, Centennial Office Building, St. Paul, Minnesota, on December 6, 1977, commencing at 10:00 a.m.; Board Room of the MPCA on December 7, 1977, commencing at 9:30 a.m.; Room 311, Centennial Office Building, St. Paul, Minnesota, on December 8, 1977, commencing at 10:00 a.m.; Board Room of the MPCA on December 9, 1977, commencing at 10:00 a.m.; Board Room of the MPCA on December 12, 1977, commencing at 9:30 a.m.; Board Room of the MPCA on December 13, 1977, commencing at 10:00 a.m.; Board Room of the MPCA on December 14, 1977, commencing at 9:00 a.m.; Board Room of the MPCA on December 15, 1977, commencing at 9:15 a.m.; Board Room of the MPCA on December 16, 1977, commencing at 9:30 a.m.; Board Room of the MPCA on January 16, 1978, commencing at 9:30 a.m.; Board Room of the MPCA on February 1, 1978, commencing at 9:30 a.m.; Board Room of the MPCA on February 2, 1978, commencing at 8.45 a.m.; Board Room of the MPCA on February 3, 1978, commencing at 9:30 a.m.; Board Room of the MPCA on February 7, 1978, commencing at 1:00 p.m.; Basement Conference Room of the MPCA on February 8, 1978, commencing at 11:00 a.m.; Basement Conference Room of the MPCA on February 9, 1978, commencing at 9:30 a.m.; Board Room of the MPCA on February 10, 1978, commencing at 9:45 a.m.; and Board Room of the MPCA on February 17, 1978, commencing at 9:45 a.m., after proper notice required by Minnesota Statutes §15.0412 (1976) was served upon all persons, associations and other interested groups registered with the Secretary of State for that purpose, and after proper publication

of the proposed rules and amendments in the September 19, 1977, State Register.

After affording all interested persons an opportunity to present written and oral data, statements, and arguments, having considered all the testimony, having considered all evidence adduced and upon the records, files, and proceedings herein, and having confirmed the need for the above-captioned rules and amendments:

NOW, THEREFORE, IT IS ORDERED that the hazardous waste rules, as adopted on the 25th day of July, 1978, are amended in the following respects:

1. The words "transported or" are deleted from HW 5.B.12.
2. The phrase "in the event the transporter does not" is deleted from the end of HW 5.E.5.

With these two amendments to the rules adopted on July 25, 1978, HW 1 - 10 are hereby adopted this 29th day of August, 1978, pursuant to authority vested in the Minnesota Pollution Control Agency by Minnesota Statutes §116.07 subds. 2, 4, and 4a and 473 subds. 1 and 3 (1976).

MINNESOTA POLLUTION CONTROL AGENCY

Joseph F. Grinnell
Chairman

Sandra S. Gardebring
Executive Director

Dated: August 29, 1978

CERTIFICATE OF BOARD'S
AUTHORIZING RESOLUTION

I, Sandra S. Gardebring, do certify that I am the Executive Director of the Minnesota Pollution Control Agency, an Agency duly authorized under the laws of the State of Minnesota, and that a resolution was adopted at the meeting of the Agency properly called on the 25th day of July, 1978; that a quorum was present at said meeting; that the resolution has not been rescinded or modified; and that the resolution provided:

> RESOLVED, that the Board hereby approves and adopts the staff's proposed Findings of Fact and Conclusions in the matter of the adoption of the hazardous waste regulations, HW 1-10, and the amendments to the solid waste regulations, SW 1, 2, 4, 6 and 7, and hereby approves and adopts these hazardous waste regulations, and amendments to the solid waste regulations, with the changes supported by the staff and as is attached to the Order Adopting Rules.
>
> BE IT FURTHER RESOLVED, that Joseph F. Grinnell, Chairman of the Agency, and Sandra S. Gardebring, Executive Director, be and hereby are authorized to sign the Findings of Fact and Conclusions and the Order Adopting Rules in this matter.

IN WITNESS WHEREOF, I have hereunto subscribed my name this 26th day of July, 1978.

Sandra Gardebring
Sandra S. Gardebring
Executive Director

Subscribed and sworn to before me
this 26th day of July, 1978:

WILLIAM DONOHUE
NOTARY PUBLIC – MINNESOTA
RAMSEY COUNTY
My Commission Expires April 29, 1982

William Donohue
Notary Public

STATE OF MINNESOTA
POLLUTION CONTROL AGENCY

In the Matter of the Proposed Adoption of Rules Governing the Identification, Labeling, Classification, Storage, Collection, Transportation and Disposal of Hazardous Waste and of Amendments to Minnesota Regulations SW 1, 2, 3, 4, 6, and 7

NOTICE OF HEARING

NOTICE IS HEREBY GIVEN that a public hearing on the above-captioned rules and amendments will be held in the following places on the indicated dates commencing at 9:30 a.m. and continuing until all persons have had an opportunity to be heard:

1. Monday, October 24, 1977: Agency Boardroom 1935 W. County Road B2, Roseville, Minnesota

2. Tuesday, October 25, 1977: Room 83, State Office Building, St. Paul, Minnesota

3. Wednesday, October 26, 1977: Agency Boardroom 1935 W. County Road B2, Roseville, Minnesota

4. Monday, Ocotber 31, 1977: Central Lecture Hall, Duluth Area Vocational Technical Institute, Duluth, Minnesota

5. Wednesday, November 2, 1977: Science and Health Building, Lecture Hall S-209, Fergus Falls Community College, Fergus Falls, Minnesota
6. Friday, November 4, 1977: Auditorium, Rochester Public Library, Rochester, Minnesota

All interested or affected persons will have an opportunity to participate. Statements may be made orally and written materials may be submitted at the hearing. In addition, written materials may be submitted by mail to the hearing examiner assigned to this matter:

William Seltzer
Office of Hearing Examiners
Room 300
1745 University Avenue
St. Paul, Minnesota 55104

(612) 296-8105

either at the hearing or within 5 working days after the close of the hearing. The hearing will be conducted as described in Minnesota Statutes §15.0412 and in Minnesota Regulations HE 101-109.

The proposed rules, if adopted, would establish criteria for determining whether a waste is a hazardous waste. They would also require the producers of most wastes to evaluate the wastes to determine whether they are hazardous. All hazardous wastes would have to be handled and disposed of in accordance with pertinent provisions of the proposed regulations. The amendments to the solid waste regulations, if adopted, would clarify that hazardous wastes are regulated under these new hazardous waste regulations and not under the solid waste regulations.

Copies of the proposed rules and amendments are now available and one free copy may be obtained by writing to the Minnesota Pollution Control Agency, 1935 W. County Road B2, Roseville, Minnesota 55113 (Attention: Jim Kinsey). Additional copies will be available at the door on the date of the hearing. The agency's authority to promulgate the proposed rules is contained in Minnesota Statutes §115.03(3) (1976), §116.07 (1976) and §473.823 (1976). A "statement of need" explaining why the agency feels the proposed rules are necessary and a "statement of evidence" outlining the testimony they will be introducing will be filed with the Hearing Examiners Office at least 25 days prior to the hearing and will be available there for public inspection.

Please be advised that Minnesota Statutes, Chapter 10A, requires each lobbyist to register with the Ethical Practices Board within five days after he commences lobbying. Lobbying includes attempting to influence rule making by communicating or urging others to communicate with public officials. A lobbyist is generally any individual who spends more than $250 per year for lobbying or any individual who is engaged for pay or authorized to spend money by another individual or association and who spends more than $250 per year or five hours per month at lobbying. The statute provides certain exceptions. Questions should be directed to the Ethical Practices Board, 41 State Office Building, St. Paul, Minnesota 55155, phone (612) 296-5615.

Dated: September 6, 1977.

MINNESOTA POLLUTION CONTROL AGENCY

By _____
Joseph F. Grinnell
Agency Board Chairman

and _____
Sandra S. Gardebring
Executive Director

STATE OF MINNESOTA
POLLUTION CONTROL AGENCY

In the Matter of the Proposed Adoption of Rules Governing the Identification, Labeling, Classification, Storage, Collection, Transportation and Disposal of Hazardous Waste and of Amendments to Minnesota Regulations SW 1, 2, 3, 4, 6, and 7

ORDER FOR HEARING

IT IS HEREBY ORDERED that a public hearing on the above-captioned rules and amendments be held in the following places on the indicated dates commencing at 9:30 a.m. and continuing until all persons have had an opportunity to be heard.

1. Monday, October 24, 1977: Agency Boardroom 1935 W. County Road B2, Roseville, Minnesota

2. Tuesday, October 25, 1977: Room 83, State Office Building, St. Paul, Minnesota

3. Wednesday, October 26, 1977: Agency Boardroom 1935 W. County Road B2, Roseville, Minnesota

4. Monday, October 31, 1977: Central Lecture Hall, Duluth Area Vocational Technical Institute, Duluth, Minnesota

5. Wednesday, November 2, 1977: Science and Health Building, Lecture Hall S-209, Fergus Falls Community College Fergus Falls, Minnesota

6. Friday. November 4, 1977: Auditorium, Rochester Public Library, Rochester, Minnesota

IT IS FURTHER ORDERED that a Notice of Hearing be mailed to all persons or representatives of associations or other interested groups who have registered their names with the Secretary of State for that purpose.

IT IS FURTHER ORDERED that the Notice of Hearing be published in the State Register.

Dated: September 6, 1977.

MINNESOTA POLLUTION CONTROL AGENCY

By Joseph F. Grinnell
Joseph F. Grinnell
Agency Board Chairman

and Sandra S. Gardebring
Sandra S. Gardebring
Executive Director

CERTIFICATE OF MINNESOTA
POLLUTION CONTROL AGENCY'S
AUTHORIZING RESOLUTIONS

I, Sandra S. Gardebring, do hereby certify that I am the Executive Director of the Minnesota Pollution Control Agency, an agency duly created under the laws of the State of Minnesota, and that the following is a true and correct copy of a resolution adopted at a meeting of the Board of the Minnesota Pollution Control Agency duly and properly called and held on the 28th day of December, 1976, that a quorum was present at said meeting, that a majority of those present voted for the resolution and that said resolution is set forth in the minutes of said meeting and has not been rescinded or modified.

> BE IT RESOLVED that the MPCA hereby authorizes the calling of a public hearing on the proposed rules of the MPCA that will relate to the identification, labeling, classification, storage, collection, transportation, treatment and disposal of hazardous wastes and the location of hazardous waste facilities.
>
> BE IT FURTHER RESOLVED, that the Agency hereby authorizes its Chairwoman and Executive Director to perform on its behalf any and all acts incidental to the holding of the hearing, including, but not limited to, signing the order for hearing and the notice of hearing.

I further certify that the following is a true and correct copy of a resolution adopted at a meeting of the Board of the Minnesota Pollution Control Agency duly and properly called and held on the 28th day of June, 1977, that a quorum was present at said meeting, that a majority of those present voted for the resolution and that said resolution is set forth in the minutes of said meeting and has not been rescinded or modified.

BE IT RESOLVED that the Agency reconfirms the following authorization originally made at its December 28, 1976, meeting:

> "That the Minnesota Pollution Control Agency hereby authorizes the calling of a public hearing on the proposed rules of the MPCA that will relate to the identification, labeling, classification, storage, collection, transportation, treatment, and disposal of hazardous wastes and the location of hazardous waste facilities.
>
> BE IT FURTHER RESOLVED that the Agency hereby authorizes its Chairwoman and Executive Director to perform on its behalf any and all acts incidental to the holding of hearings, including, but not limited to, signing the order for hearing and the notice of hearing."

I further certify that the following is a true and correct copy of a resolution adopted at a meeting of the Board of the Minnesota Pollution Control Agency duly and properly called and held on the 28th day of June, 1977, that a quorum was present at said meeting, that a majority of those present voted for the resolution and that said resolution is set forth in the minutes of said meeting and has not been rescinded or modified.

> [T]hat the Board authorizes a public hearing on proposed changes to Solid Waste Regulations 1-11.

I further certify that a meeting of the Board of the Minnesota Pollution Control Agency was duly and properly called and held on the 6th day of September, 1977, that a quorum was present at said meeting, that at that meeting a majority of those present voted for a motion which resolved that the Board

reauthorized the holding of a hearing on the hazardous waste regulations as they now exist.

Sandra S. Gardebring

Sandra S. Gardebring

Subscribed and sworn to
before me this 6th day
of September, 1977.

Notary Public

WILLIAM DONOHUE
NOTARY PUBLIC — MINNESOTA
RAMSEY COUNTY
My Commission Expires April 29, 1982

STATE OF MINNESOTA

POLLUTION CONTROL AGENCY

IN THE MATTER OF THE PROPOSED ADOPTION OF RULES OF THE POLLUTION CONTROL AGENCY GOVERNING THE IDENTIFICATION, LABELING, CLASSIFICATION, STORAGE, COLLECTION, TRANSPORTATION AND DISPOSAL OF HAZARDOUS WASTE AND OF AMENDMENTS TO MINNESOTA REGULATIONS SW 1, 2, 3, 4, 6 AND 7.

AFFIDAVIT OF RECEIPT OF THE SECRETARY OF STATE'S LIST

Michael C. Paddock, being duly sworn on oath deposes and says:

1) That he is an employee of the Solid Waste Division of the State of Minnesota.

2) That on the 16th day of September, he went to the Secretary of State's office for the State of Minnesota and requested a current list of all representatives of associations or other interested groups or persons who had registered their names with the Secretary of State for the purpose of obtaining notices of public hearings relating to the promulgation of rules pursuant to M.S. 15.0412.

3) That on the 16th day of September, in response to the above request, the Secretary of State provided him with such a list, a copy of which is attached hereto and incorporated by reference.

Further affiant sayeth not.

Michael C. Paddock

Subscribed and sworn to before me this 29th day of September, 1977.

Lila Holmdahl

Notary Public,
Ramsey County, Minnesota
My Commission expires _____

LILA HOLMDAHL
NOTARY PUBLIC - MINNESOTA
HENNEPIN COUNTY
My Commission Expires Nov. 1, 1983

STATE OF MINNESOTA

POLLUTION CONTROL AGENCY

IN THE MATTER OF THE PROPOSED ADOPTION)
OF RULES OF THE POLLUTION CONTROL AGENCY)
GOVERNING THE IDENTIFICATION, LABELING,)
CLASSIFICATION, STORAGE, COLLECTION,) AFFIDAVIT OF MAILING
TRANSPORTATION AND DISPOSAL OF HAZARDOUS)
WASTE AND OF AMENDMENTS TO MINNESOTA)
REGULATIONS SW 1, 2, 3, 4, 6 AND 7.)

John Jones, being first duly sworn, deposes and says:
That on the 16th day of September, 1977, at the City of Roseville, County of Ramsey, State of Minnesota, he served the attached Notice of Hearing by depositing in the United States mail at said City of Roseville, a true and correct copy thereof, properly enveloped, with postage prepaid, to all persons and associations at the addresses listed on the attached Certificate of the Secretary of State.

John W. Jones

Subscribed and sworn to before me this
29th day of September, 1977.
Notary Public,
Ramsey County, Minnesota
my Commission Expires Lila Holmdahl

LILA HOLMDAHL
NOTARY PUBLIC - MINNESOTA
HENNEPIN COUNTY
My Commission Expires Nov. 1, 1983

STATE OF MINNESOTA

COUNTY OF RAMSEY

MINNESOTA POLLUTION

CONTROL AGENCY

In the Matter of the Proposed Adoption of Regulations for Identification, Labeling, Classification, Storage, Collection, Transportation and Disposal of Hazardous Waste and of Amendments to Minnesota Regulations SW 1, 2, 3, 4, 6 and 7

NO. PCA 78-003-WS

STATEMENT OF COMPLIANCE WITH MANUAL OF RULE MAKING PROCEDURES

I, Special Assistant Attorney General Alan R. Mitchell, do hereby declare that I have examined the proposed rules and all related documents and that, based on them and my personal familiarity with the applicable procedures, the Manual of Rule Making Procedures has been followed.

Alan R. Mitchell

Alan R. Mitchell
Special Assistant
Attorney General

Dated: August 30, 1978.

STATE OF MINNESOTA

COUNTY OF RAMSEY

MINNESOTA POLLUTION

CONTROL AGENCY

In the Matter of the Proposed Adoption of Rules Governing the Identification, Labelling, Classification, Storage, Collection, Transportation and Disposal of Hazardous Wastes and of Amendments to Minnesota Regulations SW 1, 2, 3, 4, 6 and 7.

PCA-78-003-WS

FINDINGS OF FACT AND CONCLUSIONS

The above-entitled matter came on for decision before the Minnesota Pollution Control Agency on the 25th day of July, 1978. After affording interested persons an opportunity to present written and oral data, statements, and arguments to Hearing Examiner William Seltzer, after considering the Report of the Hearing Examiner, and after considering all of the evidence adduced upon the records, files and proceedings herein, the Agency, being fully advised in the premises, hereby accepts and adopts the following Findings of Fact and Conclusions.

FINDINGS OF FACT

The Agency adopts the Findings of Fact of the Hearing Examiner, as contained in his Report attached hereto, and incorporates them herein by reference, with the following amendments:

1. Finding No. 5 at page 4 of the Hearing Examiner's Report is amended by replacing the words "specify that the counties within the metropolitan Twin City area must participate in the hazardous waste program and establish procedures for Pollution Control Agency review of the hazardous waste programs of other counties which elect to participate in the program" with the following:

"specify procedures for Agency review of county actions pertaining to hazardous waste management."

2. Finding No. 16 at page 14 of the Hearing Examiner's Report is amended to add the following language:

In addition to the example of bioconcentration set forth by the Hearing Examiner, where the concentration of a material increases as it goes up the food chain, bioconcentration can also occur within a single trophic level, within one feeding level in the ecosystem. In the case of a single trophic level an organism can accumulate a material upon continued or repetitive exposure such that toxic levels are achieved.

It is preferable in List 1 to establish specific concentrations that determine whether a carcinogen-containing waste is hazardous. The specific concentrations contained in List 1 are derived form existing standards, primarily those of the Occupational Safety and Health Administration. However, since there is no known concentration at which a carcinogen is safe, it is necessary and reasonable to reduce the concentrations in many of these standards to assure proper management of these wastes.

For List 2 it is reasonable to rely on the most recent U.S. Environmental Protection Agency (EPA) water quality criteria to calculate the concentration of bioconcentrative materials that make a waste hazardous. In addition, it is reasonable to add arsenic and chromium to List 2, even though they are not bioconcentrative, because they are carcinogens for which EPA has developed water quality criteria.

3. Finding No. 17 at page 15 of the Hearing Examiner's Report is amended by adding the word "often" to the last line on page 16 so that this line will read:

> Historically, leachate does not often reach a half-mile perimeter . . ..

4. Finding 19 at page 21 of the Hearing Examiner's Report is amended to add the following language:

While pH is an appropriate indicator of the corrosiveness of an aqueous material, the pH of a saturated solution of a solid or other nonaqueous material is not always indicative of the environmental hazard of the material. Therefore, it is reasonable to rely on actual corrosivity tests to determine whether a nonaqueous waste is corrosive. However, allowing a person to rely on the pH of a solution of a nonaqueous waste to designate a waste as hazardous will eliminate the need to perform the more expensive corrosivity tests.

It is reasonable to rely on actual corrosivity tests with wastes that do not fall within the specified pH ranges. It is reasonable to rely on the corrosivity tests developed by the Consumer Products Safety Commission and the National Association of Corrosive Engineers.

5. Finding No. 24 at page 23 of the Hearing Examiner's Report is amended to read:

24. The Agency finds that the classification as hazardous of those wastes that cannot be handled by routine waste management techniques because they pose a substantial

present or potential hazard to human health or other living organisms is a reasonable classification. The Agency disagrees with the Hearing Examiner that rulemaking procedures must be followed to determine that a waste cannot be handled by routine waste management techniques because of its properties, but agrees with the Hearing Examiner that it is advisable and reasonable to provide a public hearing upon the request of the waste producer before making such decision.

The Agency agrees also with the Hearing Examiner that protection of the environment necessitates immediate action to classify an otherwise nonhazardous waste as hazardous. The Agency finds that it is reasonable to require a waste producer to manage his waste as hazardous during the time the Agency is considering a final determination on the properties of a waste.

6. Finding 26 at page 25 of the Hearing Examiner's Report is amended to read:

26. Selection of those wastes which are classified as "hazardous" in the within considered proposed rules and the criteria applied to determine whether or not a particular waste is hazardous was, in large part, based upon a report issued by Battelle Pacific Northwest Laboratories entitled, "Toxicological Criteria for Defining Hazardous Wastes." The report is PCA Exhibit 26. / Deletion

The subject matter addressed in PCA Exhibit 26 was the subject of intensive questioning by the public. Neither

such questioning nor any rebuttal testimony convinced the Hearing Examiner or convinces the Agency that the body of text of PCA Exhibit 26 was anything other than reasonable scientific and technical data, conclusions and recommendations. On its face, the technical report appears logical and well-reasoned and contains substantial supporting references. / Deletion

7. Finding 27 at page 27 of the Hearing Examiner's Report is amended to delete the following phase, "With the exception of HW 2.B.5."

8. Finding 29 at page 27 of the Hearing Examiner's Report is amended to read:

The definition of "waste" in the proposed rules comports with the definition of hazardous waste found in Minn. Stat. §116.06, subd. 13 (1976). The proposed definition of waste is:

> Any discarded material including, but not limited to solids, semi-solids, sludges, liquids, gases, and their vapors, mists, or dusts.

The participants at the hearing agreed that the statutory definition was the best available definition of what is a waste. The Agency finds that it is reasonable to adopt the statutory definition.

As is the case with all rules, there will undoubtedly be some borderline situations where the Agency or the courts will have to make case-by-case determinations. Perhaps after experience with the regulations, including determinations based on all available facts whether fly ash from

power plants and asphalt from petroleum refineries, the examples used by the Hearing Examiner, are wastes, the Agency can expand the definition of waste to specify what a discarded material is in a manner that would be of general applicability and future effect. To do so now for particular materials would be difficult and inappropriate.

9. Finding 30 at page 28 of the Hearing Examiner's Report is amended to delete the phrase "With the exceptions mentioned."

10. Finding 31 at page ~~28~~ 30 of the Hearing Examiner's Report is amended to read:

In deciding to what degree the Pollution Control Agency has a substantive burden to establish the economic impact of the proposed rules, the Hearing Examiner and the Agency looked to the following statutes for guidance:

> In exercising all its powers the Pollution Control Agency shall give <u>due consideration</u> to the establishment, maintenance, operation and expansion of business, commerce, trade, industry, traffic and other economic factors and other material matters affecting the feasibility and practicability of any proposed action, including, but not limited to, the burden on a municipality of any tax which may result therefrom, and shall take or provide for such action as may be reasonable, feasible, and practical under the circumstances. Minn. Stat. §116.07, subd. 6 (1976). [Emphasis added]

The Hearing Examiner and the Agency also looked to Minn. Stat. §15.0412, subd. 4 (1976) which reads, in part:

> No rule shall be adopted by any agency unless the agency first holds a public hearing thereon, affording all affected interests an opportunity to participate. . . .At the public hearing the agency shall make an affirmative presentation of facts establishing the need for and reasonableness of the rule proposed for adoption and fulfilling any relevant substantive or procedural requirements imposed on the agency by law or rule. . . . [Emphasis added]

The issue then is whether the Agency must make an affirmative presentation of facts establishing the economic reasonableness of the proposed rules or whether the Agency merely has to show that it reasonably gave "due consideration" to the economic impact of the proposed rules. The latter standard or burden of proof is obviously less stringent than the former.

In determining which standard to apply, the Hearing Examiner and the Agency considered both the Environmental Rights Act and the Environmental Policy Act, wherein the Minnesota Legislature said that economic considerations alone shall not justify a material adverse effect on the environment. Minn. Stat. §§116B.09, subd. 2 and 116D.04, subd. 6 (1976).

After examining the issue, it is found that the Pollution Control Agency need only make a reasonable showing that it has given "due consideration" to the economic impact of the proposed rules.

11. Finding 32 at page 31 of the Hearing Examiner's Report is amended to read:

> 32. The Pollution Control Agency contracted with Battelle Pacific Northwest Laboratories as consultant for the purpose of doing the economic analysis. The report

issued by Battelle in October of 1977 is entitled, "The Impact of Hazardous Waste Generation in Minnesota." Battelle's Report is PCA Exhibit 28. It is found that Battelle has the expertise to analyze economic considerations and exercised that expertise in good faith.

Battelle's expert witness testified that Battelle's charter involved several distinct functions. A written survey emanating jointly from the Minnesota Pollution Control Agency and the Minnesota Association of Commerce and Industry was mailed to facilities in the State of Minnesota. Battelle reviewed the results of the joint PCA/MACI survey. Battelle also conducted its own survey in the outstate area to supplement the information concerning hazardous waste generated by the PCA/MACI survey. Additionally, Battelle reviewed some of the work conducted previously in 1973 by Barr Engineeering.

From the information reviewed by Battelle, extrapolations were produced concluding that the per capita annual generation of hazardous waste is at a rate of approximately .039 tons per year. Battelle arrived at an average testing cost of approximately $1,000 per waste and calculated an initial investment of $4.66 million to evaluate the hazardous natures of those streams currently being generated in Minnesota. Looking at the likely number of process modifications and/or new products which would each year generate new hazardous waste streams and require a testing program,

Battelle determined that an annual basis cost will be additional $86,000 per year. Battelle also arrived at a $15,000 a year cost to industry for the manifest reporting system.

The joint PCA/MACI survey was mailed to approximately 5,568 manufacturing establishments. The survey received a response of approximately 15 percent, that is, 15 percent of the organizations receiving the survey forms returned completed forms in such a manner as they could be utilized for selecting data. That 15 percent represented approximately 21 percent of the manufacturing employment in Minnesota. Out of the 15 percent response from manufacturing firms, only 139 firms or 3 percent reported having hazardous waste. The 3 percent positive returns are represented by approximately 9 percent of manufacturing employees in Minnesota. The economic conclusions reached by Battelle were based largely upon the data developed from the joint PCA/MACI survey.

There was strenuous objection to the economic report being based, in large part, upon a response of only 139 manufacturing firms in Minnesota which reported hazardous waste streams. However, it is found that the only reasonable way in which the Pollution Control Agency could have obtained the requisite economic data was by seeking such information from industry itself. It is further found that the regulated industry cannot validly challenge the allegedly small data base as statistically insufficient for the purposes of formulating an economic impact report when the alleged insuf-

ficiencies are the responsibility of industry. It is axiomatic that it would be illogical to allow industry to complain about a small data base when it is industry itself which is largely responsible for failing to supply the required data which is particularly within their knowledge and which cannot reasonably be ascertained by the Pollution Control Agency without the assistance of industry. It should be noted that the findings concerning the statistical data base of 139 firms in the metropolitan area do not go toward findings regarding the validity of the survey questions and the manner in which the survey was conducted.

In addition to the joint PCA/MACI survey, a Battelle field survey was conducted in the outstate area. This survey encompassed on-plant interviews by Battelle employees with manufacturing facilities. Thirty-five outstate firms were contacted by Battelle. Deletion of HE p33-42

12. Finding 33 at page 42 of the Hearing Examiner's Report is amended to read:

Deletion

The record, including the Hearing Examiner's Report, leads the Agency to conclude that industries' opposition, at least to a substantial degree, was bottomed on economic factors. Industry did not dwell on attempting to show a lack of necessity for hazardous waste regulations nor did industry support a scenario denying the inherent dangers of hazardous waste. Rather, the strenuous objections of industry focused on factors which industry viewed as resulting in economic impacts unacceptable from a financial

point of view.

The amendments supported by PCA Staff were made after participating industry had made its strongest attacks against the economics associated with the rules as noticed for hearing. Therefore, PCA Staff was fully cognizant of the position taken by participating industry and it should not be denied that one of the principal motivating factors which prompted the participating industries' challenges, were economic factors. With this background in mind, it is found that the amendments to the proposed rules are largely bottomed on economic considerations which do have the effect of reducing the economic impact of the hazardous waste rules.

Indicative of the above finding is the tenor of the post-hearing written submissions submitted to the record by regulated industry. There is a vast and noticeable difference between the position taken by most participating industries before and after the final amendments supported by the PCA Staff. Such difference in attitude can only be reasonably attributed to industries satisfaction with the rule changes finally supported by staff.

It is not necessary to determine the exact dollar amount reduction that the finally proposed rules will have upon industry as compared to the rules as originally noticed for hearing. In fact, it is found that "due consideration" in this matter does not necessitate a determination of exact dollar amounts. It is reiterated that industry possessed

much of the relevant raw data necessary to make economic determinations and did not openly, freely and substantially supply that data to the Pollution Control Agency.
It is found that if one were to generalize as to the effect of the amendments proposed by PCA staff, it would be reasonable to conclude that one of the most substantial effects is to reduce the economic impact upon regulated industry.

The Agency finds that the cost of compliance with these hazardous waste regulations is not the only relevant economic consideration, but that the costs attributed to the mismanagement of hazardous waste must also be given due consideration. These costs include health costs, like treatment for illness, reclamation costs, like restoring a contaminated well, business expenses, like livestock losses or a ban on commercial fishing, and other costs resulting from mismanagement. It has already been found in Finding 7 that the mismanagement of dioxin under a $4600 disposal contract has resulted in economic damage close to $500,000. In Minnesota the contamination of a well by less than 50 pounds of arsenic has caused economic damage of around $25,000. Other examples are described in the record. The Agency finds that remedial action required and other direct losses from the mismanagement of hazardous waste can result in costs far in excess of the costs of proper disposal of the waste in the first place.

The Agency finds that "due consideration" has been given to the establishment, maintenance, operation and expansion of business, commerce, trade, industry, traffic, and to other

economic factors.

13. Finding 35 at page 45 of the Hearing Examiner's Report is amended to read:

35. While there is no issue as to whether the Resource Conservation and Recovery Act preempts a state from adopting hazardous waste rules as discussed in Paragraph 34 above, issue was raised as to whether the Agency has authority to regulate the transportation of hazardous waste. The argument raised during the within considered proceedings is that Congress by passage of the Hazardous Materials Transportation Act (49 U.S.C.A. §1801 et seq.) has preempted state regulation of the transportation of hazardous waste.

The federal Hazardous Materials Transportation Act specifically empowers the Secretary to "issue. . .regulations for the safe transportation in commerce of hazardous materials" which "may govern any safety aspect of the transportation of hazardous materials which the Secretary may deem necessary or appropriate." (49 U.S.C. §1804(a)) The Act further authorizes the Secretary "to establish criteria for handling hazardous materials." (49 U.S.C. §1805(a)) Finally, the Act contains specific requirements at 49 U.S.C. §1811, which reads, in pertinent part, as follows:

> (a) Except as provided in subsection (b) of this section, any requirement, of a State or political subdivision thereof, which is inconsistent with any requirement set forth in this chapter, or in a regulation issued under this chapter, is preempted. (Emphasis added)

> (b) Any requirement, of a State or political subdivision thereof, which is not consistent with any requirement set forth in this chapter, or in a regulation issued under this chapter, if not preempted if, upon the application of an appropriate State agency, the Secretary determines, in accordance with procedures to be prescribed by regulation, that such requirement (1) affords an equal or greater level of protection to the public than is afforded by the requirements of this chapter or of regulations issued under this chapter and (2) does not unreasonably burden commerce. Such requirement shall not be preempted to the extent specified in such determination by the Secretary for so long as such state or political subdivision thereof continues to administer and enforce effectively such requirement.

Thus, the Hazardous Materials Transportation Act provides that any requirement of a state, or political subdivision thereof, which is inconsistent with any requirement set forth therein, or in a regulation issued thereunder, is preempted unless, upon application of the appropriate state agency, the Secretary of Transportation determines that such requirement affords an equal or greater level of protection to the public and does not unreasonably burden interstate commerce. The Materials Transportation Bureau has established procedures whereby a preemption determination in accordance with the Hazardous Materials Act may be obtained, 41 Fed. Reg. 38167-38183 (September 9, 1976) which became effective on January 3, 1977. No such preemption determination has been requested or made with regard to the Pollution Control Agency's proposed rules.

A question, then, to be considered is whether the rules proposed by PCA Staff are consistent with the regulations of the United States Department of Transportation promulgated

under the Hazardous Materials Transportation Act.

First, one must establish what inconsistency is. In Florida Avocado Growers v. Paul, 373 U.S. 132 (1963), in which a California statute prohibiting the transportation or sale of avocados with less than eight percent oil was upheld when an order of the Secretary of Agriculture based its maturity requirements on entirely different grounds, the Court said:

> The test of whether both Federal and State regulations may operate, or the State regulation must give way, is whether both regulations can be enforced without impairing the Federal superintendence of the field, not whether they are aimed at similar or different objectives.

This leads one to question whether any of the proposed rules impair the federal program. The proposed rules place additional requirements on transporters and others that DOT does not; shipping papers is the best example. Burlington Northern's witnesses (Graziano, Cross, and Metry) testified on numerous occasions that the proposed rules were inconsistent with DOT regulations. However, Mr. Cross admitted, after questioning by PCA Staff, that transporters could comply with both state and federal law:

"Q. . . .[I]s it possible for the transporters to comply with the DOT regulations and the PCA regulations as proposed?

"A. Yes, they can comply with both, but then it's an economic hardship involved in it." [Tr. p. 2640]

The Agency disagrees with the Hearing Examiner that there is a substantial issue as to whether the proposed rules are subject to a valid attack under the provisions of the federal Hazardous Materials Transportation Act. The Agency specifically finds that the proposed rules are not inconsistent with the Hazardous Materials Transportation Act or any regulations of the Department of Transportation promulgated thereunder.

14. Finding 36 at page 50 of the Hearing Examiner's Report is amended to read:

36. The Agency disagrees with the Hearing Examiner that the addition of language that attempts to describe the constitutional test for preemption of a State law will resolve any possible conflicts with the Hazardous Materials Transportation Act or Department of Transportation regulations. Nonetheless, the Agency agrees that it is reasonable to recognize that nothing in the regulations should be construed to require any person to comply with a provision that the courts determine is preempted by federal law. The Agency finds, however, that it would be inappropriate to attempt by rule to expand or restrict the preemption doctrine as applied by the courts.

15. Finding 37 at page 51 of the Hearing Examiner's Report is deleted.

16. Finding 38 at page 52 of the Hearing Examiner's Report is amended by deleting the last four sentences of the first paragraph.

17. Finding 42 at page 53 of the Hearing Examiner's Report is amended to read:

42. The scheme of the proposed hazardous waste rules in treating separately the metropolitan and outstate area is found to be reasonable and necessary. The vast majority of hazardous waste produced in Minnesota comes from the metropolitan area. The legislature requires the metropolitan counties to develop hazardous waste management programs. Other counties have authority to develop such programs but are not required to do so. It is reasonable to allow counties to handle certain portions of the hazardous waste management program when they have adequate county ordinances. This will eliminate duplicative efforts on the part of generators and the Agency.

18. Finding 44 at page 54 of the Hearing Examiner's Report is amended to read:

44. The Agency finds that the Agency has demonstrated and does have statutory authority to adopt the proposed hazardous waste rules as finally supported by the staff and as is consistent with the Agency's Findings.

19. Finding 46 at page 55 of the Hearing Examiner's Report is deleted.

20. Findings 38, 39, 40, 41, 42, 43, 44, 45 and 47 are appropriately renumbered to account for the deletion of Findings 37 and 46.

21. A new Finding 46 is made to clarify abbreviations and correct errata in the Hearing Examiner's Report as follows:

(1) On page 7 of the Hearing Examiner's Report a page number is added to the Davis cite so it reads:

> K. Davis, Administrative Law of the Seventies, 65 (Cumulative Supp. 1977).

(2) On page 14 of the Hearing Examiner's Report in Finding 15, an addition is made in the third paragraph to read:

> (See Paragraphs No. 21, 22, 23 and 24)

(3) In Finding 16 on page 14 of the Hearing Examiner's Report the following abbreviations are identified:

> OSHA - Occupation Safety and Health Administration
>
> NIOSH - National Institute for Occupational Safety and Health

(4) In Finding 17 on pages 16-19 of the Hearing Examiner's Report, "milograms" should be "milligrams."

(5) In Finding 17 on page 17 in the second full paragraph, the words "there there" should read "where there."

(6) In Finding 17 at the bottom of page 20 of the Hearing Examiner's Report, the abbreviation IMCO stands for Intergovernmental Maritime Consultative Organization.

(7) In Finding 19 on page 22 of the Hearing Examiner's Report, "mainted" should read "maintained."

(8) In Finding 23 on page 23 of the Hearing Examiner's Report, in the first sentence "is" should read "are."

(9) In Finding 30 on page 53 of the Hearing Examiner's Report, the word "manage" should read "managing."

CONCLUSIONS

A. The Minnesota Pollution Control Agency duly acquired and now has jurisdiction over this proceeding.

B. All relevant legal and procedural requirements of statutes and regulations have been properly complied with.

C. The Minnesota Pollution Control Agency has statutory authority to promulgate and adopt the proposed rules, as finally amended and supported by the staff and as is consistent with the Agency's findings.

D. Considering the complete record of the within proceedings and considering the rules as originally proposed, the Minnesota Pollution Control Agency concludes that the proposed rules, as finally amended and supported by the staff and as is consistent with the Agency's Findings, are reasonable and necessary.

E. In reviewing the proposed rule as noticed for public hearing, and adopting amendments in accordance with the Agency's Findings, consideration was given to Minn. Reg. HE 108, which sets forth the criteria necessary to determine whether a rule as finally adopted is substantially different from the rule as originally proposed.

MINNESOTA POLLUTION CONTROL AGENCY

David F. Grinnell

Joseph F. Grinnell
Chairman

Sandra Gardebring

Sandra S. Gardebring
Executive Director

Dated this 25th day of July, 1978.

denying the inherent dangers of hazardous waste. Rather, the strenuous objections of industry focused on factors which industry viewed as resulting in economic impacts unacceptable from a financial point of view.

Motiviated by the above stated factors, the industries which participated in the hearing process entered into negotiations with the Staff of the Minnesota Pollution Control Agency. During a relatively long recess between hearing dates, representatives of the participating industries obtained substantial concessions from PCA Staff resulting in amendments to the rules as originally noticed for hearing. See, for example, PCA Exhibits 37, 41, 42, 43, 44, 45, 47, 50 and 61. (Note should be taken that the substantial concessions referred to by the Hearing Examiner do not necessarily result in substantial rule changes as envisioned in the criteria set forth at Minn. Regs. HE 107 and 108. That determination lies within the province to the Chief Hearing Examiner.)

The amendments supported by PCA Staff were made after participating industry had made its strongest attacks against the economics associated with the rules as noticed for hearing. Therefore, PCA Staff was fully cognizant of the position taken by participating industry and it should not be denied that one of the principal motivating factors which prompted the participating industries' challenges, were economic factors. With this background in mind, it is found that the concessions made by the PCA Staff are largely bottomed on economic considerations which do have the effect of reducing the economic impact of the hazardous waste rules as finally supported and proposed by PCA Staff.

It is not necessary to determine the exact dollar amount reduction that the finally proposed rules will have upon industry as compared to the rules as originally noticed for hearing. In fact, it is found that "due consideration" in this matter does not necessitate a determination of exact dollar

amounts. It is reiterated that one of the factors which inhibited the Agency from giving the requisite due consideration to the economic impact of the proposed rules is that industry possessed much of the relevant raw data necessary to make economic determinations and did not openly, freely and substantially supply that data to the Pollution Control Agency.

It is found that if one were to generalize as to the effect of the amendments proposed by PCA Staff, it would be reasonable to conclude that one of the most substantial effects is to induce a reduction of the economic impact upon regulated industry. That being the case, it is found that the Pollution Control Agency did give "due consideration" to the economic factors involved before the close of the record of the within considered proceedings.

Indicative of the above finding is the tenor of the post-hearing written submissions submitted to the record by regulated industry. There is a vast and noticeable difference between the position taken by most participating industries before and after the final amendments supported by PCA Staff. Such difference in attitude can only be reasonably attributed to industries' satisfaction with the rule changes finally supported by Staff.

As was the case with regard to the findings herein concerning the appropriateness of the technical criteria embodied in the proposed rules, the findings pertaining to economic reasonableness only apply to the hazardous waste rules as finally supported by PCA Staff and only to the degree in which rules as finally adopted are consistent with the findings herein.

34. Another issue which should be addressed is whether a federal hazardous waste program would displace the need for a state program. At this time, the United States Government is putting together a hazardous waste program through the auspices of the United States Environmental Protection Agency. Federal

government representatives testified that the Resource Conservation and Recovery Act clearly contemplates that the National Hazardous Waste management program will be carried out through the development of state programs in lieu of the federal government. The United States Environmental Protection Agency stated that: State regulations should control hazardous waste from the point of generation through transportation, to storage, treatment or disposal.

Although the federal government will eventually promulgate hazardous waste rules, it is not anticipated that such federal regulation will preempt state regulation. It is expected, as is the case with other environmental disciplines, individual states may adopt standards more stringent than federal standards. Once a federal program is implemented, individual state programs will be examined to determine whether they are equivalent to the federal program and consistent with other state programs. Although a federal program has not yet been implemented and although many states do not yet have individual hazardous waste programs, there is no substantial showing in the record that Minnesota's hazardous waste rules will not meet the consistency and equivalency tests.

35. While there is no issue as to whether the Resource Conservation and Recovery Act preempts a state from adopting hazardous waste rules as discussed in Paragraph 34 above, issue was raised as to whether the Agency has authority to regulate the transportation of hazardous waste. The argument raised during the within considered proceedings is that Congress by passage of the Hazardous Materials Transportation Act (49 U.S.C.A. § 1801 et seq.) has preempted state regulation of the transportation of hazardous waste. Preemption is a constitutional argument based on the Supremacy Clause of the United States Constitution. In arguing this issue, PCA Staff asserts that the burden is on the challenger to establish unconstitutionality and that that burden is an extreme burden to overcome. The PCA Staff asserts that

legislative action and administrative action are presumed to be constitutionally valid and cites as authority Federal Distillers, Inc. v. State of Minnesota, 229 N.W.2d 144 (Minn. 1975) and Head v. Special School District No. 1, 182 N.W.2d 887 (Minn. 1970).

However, it is found that the asserted presumption in favor of constitutionality of administrative action is not applicable to the matter at hand. The principles of constitutional law cited by PCA Staff apply to existing law embodied in either statute or administrative rule. That is not the situation here. The hazardous waste rules are merely being proposed and, therefore, have not attained any presumption of constitutionality. In fact, it would be most advisable to examine the issues of constitutionality during the inception period and before final action is taken which escalates a proposed rule to a position of having force and effect of law by its adoption.

The federal Hazardous Materials Transportation Act specifically empowers the Secretary to "issue. . .regulations for the safe transportation in commerce of hazardous materials" which "may govern any safety aspect of the transportation of hazardous materials which the Secretary may deem necessary or appropriate". (49 U.S.C. § 1804(a)) The Act further authorizes the Secretary "to establish criteria for handling hazardous materials". (49 U.S.C. § 1805(a)) Finally, the Act contains specific requirements at 49 U.S.C. § 1811, which reads, in pertinent part, as follows:

> (a) Except as provided in subsection (b) of this section, any requirement, of a State or political subdivision thereof, which is inconsistent with any requirement set forth in this chapter, or in a regulation issued under this chapter, is preempted. (Emphasis added)
>
> (b) Any requirement, of a State or political subdivision thereof, which is not consistent with any requirement set forth in this chapter, or in a regulation issued under this chapter, is not preempted if, upon the application of an appropriate State agency, the Secretary determines, in accordance with procedures to be prescribed by regulation, that such requirement

> (1) affords an equal or greater level of protection to the public than is afforded by the requirements of this chapter or of regulations issued under this chapter and (2) does not unreasonably burden commerce. Such requirement shall not be preempted to the extent specified in such determination by the Secretary for so long as such state or political subdivision thereof continues to administer and enforce effectively such requirement.

Thus, the Hazardous Materials Transportation Act provides that any requirement of a state, or political subdivision thereof, which is inconsistent with any requirement set forth therein, or in a regulation issued thereunder, is preempted unless, upon application of the appropriate state agency, the Secretary of Transportation determines that such requirement affords an equal or greater level of protection to the public and does not unreasonably burden interstate commerce. The Materials Transportation Bureau has established procedures whereby a preemption determination in accordance with the Hazardous Materials Act may be obtained, 41 Fed. Reg. 38167-38183 (September 9, 1976) which became effective on January 3, 1977. No such preemption determination has been requested or made with regard to the Pollution Control Agency's proposed rules.

A question, then, to be considered is whether the rules proposed by PCA Staff are consistent with any regulations of the United States Department of Transportation promulgated under the Hazardous Materials Transportation Act.

First, one must establish what inconsistency is. In Florida Avocado Growers v. Paul, 373 U.S. 132 (1963), in which a California statute prohibiting the transportation or sale of avocados with less than eight percent oil was upheld when an order of the Secretary of Agriculture based its maturity requirements on entirely different grounds, the Court said:

> The test of whether both Federal and State regulations may operate, or the State regulation must give way, is whether both regulations can be enforced without impairing the Federal superintendence of the field, not whether they are aimed at similar or different objectives.

This leads one to question whether any of the proposed rules impair the federal program. In those areas where a substance is regulated by the United States Department of Transportation as a hazardous material and is also a hazardous waste under Minnesota's proposed regulations, there would be state requirements for loading and shipping such substances which may or may not be commonsense type requirements and which may or may not necessarily impair the federal program.

If a hazardous waste under the proposed Minnesota rules were not a DOT hazardous material, there may or may not be an inconsistency because DOT does not regulate it. In fact, were it not for the questions of impairment and inconsistency, this may be a major reason why the Pollution Control Agency cannot wholly rely on DOT to regulate transportation of hazardous wastes. [Tr. p. 488] It should be noted that during the hearing, it was learned that kepone, which Mr. Cross, Burlington Northern's expert, called a poison, [Tr. p. 2631] may not even be regulated by DOT.

The proposed rules place additional requirements on transporters and others that DOT does not; shipping papers is the best example. Burlington Northern's witnesses (Graziano, Cross, and Metry) testified on numerous occasions that the proposed rules were inconsistent with DOT regulations. However, Mr. Cross admitted, after questioning by PCA Staff, that transporters could comply with both state and federal law:

"Q. . . .[I]s it possible for the transporters to comply with the DOT regulations and the PCA regulations as proposed?

"A. Yes, they can comply with both, but then it's an economic hardship involved in it." [Tr. p. 2640]

Thus, there may or may not be inconsistencies in the proposed rules which impair the federal program. However, such determinations may require decision on a case-by-case basis.

It may have been preferable if the Pollution Control Agency had applied to the United States Secretary of Transportation

to determine whether the requirements of the proposed rules afford an equal or greater level of protection to the public and whether the proposed rules unreasonably burden interstate commerce. Since that procedure was not undertaken by the Agency, the issue remains as to whether the proposed rules impair or are inconsistent with regulations of the United States Department of Transportation. If the proposed rules impair or are inconsistent, then they are subject to federal preemption.

The Hearing Examiner finds that there is a substantial issue as to whether or not the proposed rules are subject to a valid attack under the provisions of the federal Hazardous Materials Transportation Act. Nevertheless, deciding this issue at this time can be avoided without gutting an important portion of the proposed rules by the addition of language which will be discussed later hereinbelow.

The central issue of constitutionality is whether the provisions of the proposed rules relating to transportation of hazardous waste violate Art. I, § 8, cl. 3 of the United States Constitution, commonly known as the Commerce Clause. Courts have interpreted the Commerce Clause to have both an affirmative aspect--to support some exertion of federal control--and negative implications--to strike down or restrict state legislation. Hackensack Meadowlands Development Commission v. Municipal Sanitary Landfill Authority, 68 N.J. 454 (1975). We are concerned here only with the negative side of the Commerce Clause. The Hackensack court distinguished the two:

> The Supreme Court has understandably adopted a very sweeping concept of the Commerce Clause in its affirmative application, in order to further the extent of Congressional control. A much more confined notion of the reach of this provision has, however, been manifested, as we shall see, when it has been envoked to prohibit or limit state action.

Unquestionably, the proposed rules will have an impact upon interstate commerce. ". . .[A]lthough most exercises of

the police power affect interstate commerce to some degree, not every such exercise is invalid under the commerce clause." Pike v. Bruce Church Inc., 397 U.S. at 145. The burdens imposed on transporters must be weighed against the interests of the state for preservation of public health and the environment. The Hackensack court said:

> When balanced against the dangers to public health and to the environment that this legislation seeks to avert, those relatively small costs and modest inconveniences seem minor indeed.
>
> Other state and federal courts in very recent years have not hesitated to sustain legislation having as its aim the protection of health and the maintenance of environmental values and natural resources against attacks upon alleged violations of the Commerce Clause.

As can be seen from the above, the Commerce Clause is not pervasive. Yet, having declined to apply for an appropriate exemption from the United States Secretary of Transportation, the very specific expressed language of the Hazardous Materials Transportation Act must be regarded with caution lest the proposed rules be adopted and later nullified by judicial action taken under the federal statute.

36. As evidenced in the findings of Paragraph 35 hereinabove, the Hearing Examiner finds that there is a substantial issue as to whether the proposed rules are consistent or inconsistent with the federal Hazardous Materials Transportation Act and regulations adopted thereunder. However, it is found that the problem can be resolved by adding additional language to proposed HW 1.G. The underlined portion of the sentence set forth below indicates the proposed amendatory language suggested by the Hearing Examiner:

> Nothing in these regulations shall be construed to require any person to perform any act which impairs Federal superintendence of the field or is inconsistent with, prohibited by or to refrain from performing any act required by the United States Code or any duly adopted and valid regulation hereunder.

The suggested amendatory language will remove any doubt as to whether the proposed rules are consistent with federal regulation so as to avoid preemption. Thus, if an act were performed which would judicially be interpreted as impairing Federal superintendence of the field or which would be adjudicated inconsistent with federal law, then the act or action would be found invalid leaving the state rules in tact merely to be interpreted in accordance with judicial decision that would not invalidate its thrust with a preemption finding.

37. The PCA Staff concluded its argument on the issue of preemption by asserting that hazardous waste is not even a commodity that is entitled to protection under the Commerce Clause. The argument was that the Commerce Clause applies only to commodities and objects that are harmful to the public are beyond the purview of the Commerce Clause. Included among authorities cited for that position is Hardage v. Atkins, No. CIV-76-0945-E (D. Okla. May 27, 1977), wherein the court stated:

> Generally, objects which are harmful to the public health are not commodities and do not fall within the purview of the Commerce Clause.

Id., Slip Opinion at 3. The Hardage court then used this reasoning to uphold a state statute which regulated the shipping of industrial wastes into the State of Oklahoma. (This case is now on appeal to the Court of Appeals.) Hardage v. Atkins, appeal docketed, No. 77-1613 (10th Cir.).

However, the Hearing Examiner finds that the Hardage case is not controlling in Minnesota, nor can he guess as to the eventual outcome on appeal. However, the Hardage case may be distinguishable in that the statute in question in the Hardage decision does not place a direct burden on the transportation industry to perform positive or overt acts as is the case with the proposed rules wherein both the generator delivering hazardous waste to a transporter has certain obligations as does the transporter. (E.g., HW 5.B. and HW 5.C.)

Finally, the Hearing Examiner is reticent to adopt the logic of the Hardage case. If objects which are harmful to public health are not commodities under the Commerce Clause, it would seem that the Hazardous Materials Transportation Act is itself unconstitutional because it purports to regulate the transportation of hazardous materials and wastes and provides for preemption all under the Commerce Clause. If hazardous materials, which are obviously harmful to the public health, are not commodities then the federal Act is null and void. The Hearing Examiner does not have authority to vitiate federal law.

38. The next issue examined in this Report is "waste evaluation" as required by the proposed rules. It is crucial that all persons generating hazardous wastes manage them in a manner that will protect persons and the environment from their hazards. However, if a generator does not even know he is producing a hazardous waste, he may not manage his hazardous waste in an appropriate manner. Therefore, it is imperative that wastes be evaluated to determine whether they are hazardous. The generator is the person who is in the best position to perform this evaluation. However, there may be instances where a "facility operator" is in doubt as to whether he can accept a shipment of hazardous waste under the provisions of his particular permit. In those instances where it would be unreasonable to require the facility operator to test the waste, provisions should be made for him to be able to rely on the reasonable representations of the generator. This should be done to avoid any necessity of double testing. Thus, appropriate amendment should be made to HW 4.C.2.b.

It is not enough just to know whether a waste is a hazardous waste. The hazards posed by flammable and toxic wastes are, for example, very different. Therefore, a waste needs to be evaluated for each potentially hazardous property. The provisions of HW 2.D. and E. of the rules specify how a waste

is to be evaluated to determine whether it is a hazardous waste. These provisions are reasonable requirements for evaluating a waste. They do not require expensive carcinogenic and bioconcentrative tests. They relieve a waste producer from evaluating a waste against all of the criteria for a particular hazardous property once he has determined that a waste is hazardous under one of the criteria. The rules do not require needless tests, but allow the use of literature, data and experience in the evaluation of a waste. They allow the use of a less expensive method of testing for lethal doses and concentrations. They allow the use of only a single evaluation for similar wastes.

The proposed rules also establish a reasonable procedure by which the Agency may determine whether a waste is hazardous when such Agency determination becomes necessary.

39. The thrust and intent of the proposed rules is reasonably carried forth in the responsibilities they place on a generator for determining the nature of his waste, making appropriate disclosures to the Agency and manage the waste in an appropriate fashion while possessing adequate financial resources to pay for its proper disposal.

40. The proper labelling of hazardous waste is necessary to protect the public. The proposed rules reasonably and adequately deal with labelling requirements.

41. The final resting place of hazardous waste must be subject to regulation to ensure the requisite degree of protection for our environment. The proposed rules reasonably and necessarily regulate hazardous waste facilities. In accordance with its reasonable program, the Agency's proposed rules appropriately provide for a permit program which is reasonable and necessary to ensure proper handling and disposal of hazardous wastes.

42. The scheme of the proposed hazardous waste rules in treating separately the metropolitan and outstate area are found to be reasonable and necessary. The vast majority of

hazardous waste produced in Minnesota comes from the metropolitan area. Accordingly, reasonable provision is made for mandatory compliance in the metropolitan area leaving the outstate counties discretion to adopt a similar program or not.

43. The requirements of the proposed hazardous waste rules are reasonable in requiring immediate clean up and notification of the incident to the Pollution Control Agency.

44. Findings concerning the impact of the Hazardous Materials Transportation Act, 49 U.S.C.A. § 1801 et seq., and the Resource Conservation and Recovery Act, 42 U.S.C.A. § 6801 et seq., are stated elsewhere hereinabove. Those issues having been decided and findings made that the Resource Conservation and Recovery Act does not preempt state action, while the Hazardous Materials Transportation Act might preempt proposed regulations pertaining to the transportation of hazardous waste if the language suggested by the Hearing Examiner is not adopted; it is finally found that the Minnesota Pollution Control Agency has demonstrated and does have statutory authority to adopt the proposed hazardous waste rules as finally supported by PCA Staff and as is consistent with the Findings of this Report.

Lastly, attention is again called to the fact that the Findings contained herein conclude with recommended adoption of the rules as finally supported by PCA Staff with the changes recommended by the Examiner. The Report does not examine in depth the rules as originally noticed for public hearing. Had the Hearing Examiner only examined the rules as originally noticed for hearing, the Findings, Conclusions and Recommendations would be otherwise.

45. Since the proposed hazardous waste rules cover a new area of administrative regulation and because of the voluminous record resulting from the public hearing process, this Report did not detail the intricacies of each rule and its numerous subparts. Nevertheless, all aspects of the rules as finally proposed and the hearing record have been considered before

finalizing this Report.

46. Finally, the Board of the Pollution Control Agency should be cognizant of a letter dated and received by the Office of Hearing Examiners on March 9, 1978, and accompanying report from the Minnesota Department of Health. On its face, the letter seems to challenge the use of "land-farming" to biologically degrade oily wastes. The Department of Health raises the issue of potential carcinogens in PAH compounds as relates to oily wastes.

The record of the within considered proceedings closed March 9, 1978. The twelfth hour submission by the Minnesota Department of Health detracts from the record developed in the within considered rulemaking process. The concerns expressed by the Minnesota Department of Health would better have been presented if raised during the course of public hearings to allow the vitally concerned public, impacted industry and other state agencies to appropriately consider the concerns raised by the Department of Health.

Because the Department of Health's submission came at a time which precluded examination during the public hearing process or even further consideration by other parties during the post-hearing interim before the close of the record, the Examiner cannot adequately assess the Department's submission. However, because of the obvious concern of all citizens to reduce the hazard of cancer-causing agents, the Examiner urges the Board of the Pollution Control Agency to utilize the expertise of its staff in interpreting the Department of Health's submission before final action is taken.

47. Lastly, the changes proposed for existing solid waste rules SW 1, 2, 3, 4, 6 and 7 will prevent confusion between the two sets of regulations. The proposed changes to these rules are found to be reasonable and necessary.

CONCLUSIONS

A. That the Minnesota Pollution Control Agency and the Hearing Examiner duly acquired and now have jurisdiction over

the within considered proceedings.

B. That all relevant, legal and procedural requirements of statute and regulation have been properly complied with for the purpose of proceeding to public hearing and issuing the within Report.

C. That in selecting those wastes which are to be classified as "hazardous waste" under the proposed rules and in selecting the criteria for determining whether or not a waste is hazardous, the Pollution Control Agency acted reasonably and exercised its statutory mandate to proposed hazardous waste rules while utilizing reasonable policy decisions in selecting the technical basis for classifications and criteria.

D. The Pollution Control Agency allowed for adequate safety factors in selecting its technical criteria so as to ensure protection from non-lethal effects of hazardous waste.

E. Reasonable "variance" procedures are provided for to allow industries the requisite exemptions that may be necessitated under specific circumstances. For example, a large medical research institution or hospital may perceive certain portions of the proposed rules pertaining to small substances of unrelated materials to create unwarranted burdens. If such were the case, reasonable variance procedures can supply appropriate relief.

F. In the main, the industries which actively participated throughout the hearing process negotiated with PCA Staff and gained concessions which prompted those participating industries to refrain from challenging the rules as finally proposed during the post-hearing process.

RECOMMENDATIONS

IT IS HEREBY RESPECTFULLY RECOMMENDED: That the Board of the Minnesota Pollution Control Agency adopt the proposed hazardous waste rules as finally supported and proposed by PCA Staff with the changes indicated in the Findings of Fact hereinabove.

Dated: May 15, 1978.

WILLIAM SELTZER
Hearing Examiner

Room 83, State Office Building, Saint Paul, Minnesota, on October 25, 1977, commencing at 9:30 a.m., Board Room of the MPCA on October 26, 1977, commencing at 9:30 a.m.; Board Room of the MPCA on October 27, 1977, commencing at 9:30 a.m.; Board Room of the MPCA on October 28, 1977, commencing at 10:00 a.m.; Central Lecture Hall, Duluth Area Vocational Technical Institute, Duluth, Minnesota, on October 31, 1977, commencing at 9:30 a.m.; Lecture Hall of the Science and Health Building, Fergus Falls Community College, Fergus Falls, Minnesota, on November 2, 1977, commencing at 10:00 a.m.; Auditorium of the Rochester Public Library, Rochester, Minnesota, on November 4, 1977, commencing at 9:30 a.m.; Board Room of the MPCA on November 28, 1977, commencing at 10:00 a.m.; Board Room of the MPCA on November 30, 1977, commencing at 9:30 a.m.; Board Room of the MPCA on December 5, 1977, commencing at 10:00 a.m.; Room 311 Centennial Office Building, Saint Paul, Minnesota, on December 6, 1977, commencing at 10:00 a.m.; Board Room of the MPCA on December 7, 1977, commencing at 9:30 a.m.; Room 311, Centennial Office Building, Saint Paul, Minnesota, on December 8, 1977, commencing at 10:00 a.m.; Board Room of the MPCA on December 9, 1977, commencing at 10:00 a.m.; Board Room of the MPCA on December 12, 1977, commencing at 9:30 a.m.; Board Room of the MPCA on December 13, 1977, commencing at 10:00 a.m.; Board Room of the MPCA on December 14, 1977, commencing at 9:00 a.m.; Board Room of the MPCA on December 15, 1977, commencing at 9:15 a.m.; Board Room of the MPCA on December 16, 1977, commencing at 9:30 a.m.; Board Room of the MPCA on January 16, 1978, commencing at 9:30 a.m.; Board Room of the MPCA on February 1, 1978, commencing at 9:30 a.m.; Board Room of the MPCA on February 2, 1978, commencing at 8:45 a.m.; Board Room of the MPCA on February 3, 1978, commencing at 9:30 a.m.; Board Room of the MPCA on February 7, 1978, commencing at 1:00 p.m.; Basement Conference Room of the MPCA on February 8, 1978,

commencing at 11:00 a.m.; Basement Conference Room of the MPCA on February 9, 1978, commencing at 9:30 a.m.; Board Room of the MPCA on February 10, 1978, commencing at 9:45 a.m.; and Board Room of the MPCA on February 17, 1978, commencing at 9:45 a.m.

STATE OF MINNESOTA
OFFICE OF HEARING EXAMINERS

FOR THE POLLUTION CONTROL AGENCY

In the Matter of the Proposed Adoption of Rules Governing the Identification, Labelling, Classification, Storage, Collection, Transportation and Disposal of Hazardous Wastes and of Amendments to Minnesota Regulations SW 1, 2, 3, 4, 6 and 7.

REPORT OF HEARING EXAMINER

The above-entitled matter came duly on for hearing before William Seltzer, Hearing Examiner, on the 24th day of October, 1977, in the Board Room of the Minnesota Pollution Control Agency, 1935 West County Road B-2, Roseville, Minnesota, commencing at approximately 9:30 a.m. Said hearing was duly recessed and reconvened at various times and locations specifically set forth in "Attachment 1", attached hereto and made a part hereof.

Alan Mitchell and James Early, Special Assistant Attorneys General, appeared for and on behalf of the Minnesota Pollution Control Agency Staff (hereinafter sometimes referred to as "PCA Staff"), in support of the within considered proposed rules.

In addition to participation by the general public, appearances were duly noted for the record by the following individuals that participated in all or the majority of hearings: G. Robert Johnson and Robert S. Burk, of the firm of Popham, Haik, Schnobrich, Kaufman and Doty, Attorneys at Law, IDS Center, Minneapolis, Minnesota, for and on behalf of Ashland Oil Company, Continental and Koch Refining Company; Richard Gleason, Attorney at Law, 176 South Fifth Street, Saint Paul, Minnesota, for and on behalf of Burlington Northern, Inc.; James T. Shields, Director of Environmental Affairs, Minnesota Association of Commerce and Industry, Hanover Building, 480 Cedar Street, Saint Paul, Minnesota, for and on behalf of the Minnesota Association of Commerce and Industry; and Bradley C. Sweet, Attorney at Law, Office of General Counsel, 3M Center, Saint Paul, Minnesota, for and on behalf of Minnesota Mining and Manufacturing Company.

In addition to the above specifically named participants, all interested persons, representatives of individuals or associations, and other interested groups present at the hearing had an opportunity to present evidence and question witnesses.

The record of proceedings remained open through the 9th day of March, 1978. Pursuant to Minn. Stat. § 15.0412, subd. 4 (1977 Supp.), the Hearing Examiner's Report is to be completed within 30 days after the close of the hearing record unless the Chief Hearing Examiner, upon written request of the agency and the Hearing Examiner, orders an extension. Written requests for an extension of the 30-day period were filed with the Chief Hearing Examiner by the Minnesota Pollution Control Agency and the Hearing Examiner. Such extension was granted in writing by the Chief Hearing Examiner.

Pursuant to Minn. Stat. § 15.0412, subd. 4 (1976), this Report shall be available for review to all affected individuals upon request for at least five days. The Minnesota Pollution Control Agency shall, if it proposes to adopt the rules as originally proposed or amended, submit the complete hearing record, including its Findings and Order to the Chief Hearing Examiner no earlier than ten days subsequent to the receipt of this Report. Such submission shall also clearly indicate any changes made to the rules as originally proposed, preferably in the format that will be submitted to the State Register for publication. The Chief Hearing Examiner shall complete his review and submit his Report to the Minnesota Pollution Control Agency on the issue of substantial changes, if any, in the proposed rules within ten calendar days after receipt of the Findings and Order of the Board of the Minnesota Pollution Control Agency. Thereafter, the Minnesota Pollution Control Agency shall be responsible for filing the rules with the Attorney General.

The Hearing Examiner, upon all records, files, evidence, arguments of counsel, and written comments filed before the close of the record, hereby makes and issues the following Findings of Fact, Conclusions and Recommendations:

FINDINGS OF FACT

1. On September 29, 1977, the Executive Director of the Minnesota Pollution Control Agency filed the following documents with the Chief Hearing Examiner which were accepted as proper and correct as to form and content:

(a) Order for Hearing;
(b) Notice of Hearing;
(c) Affidavit of Receipt of the Secretary of State's list;
(d) Affidavit of Mailing;
(e) Statement of Need;
(f) Materials received pursuant to a notice of public meetings published in the State Register on July 13, 1976, at 1 State Register 23; and
(g) Statement of Evidence, including the names of agency personnel to appear on behalf of the agency.

All documents were available for inspection at the Minnesota Office of Hearing Examiners from the date of filing to the date of hearing.

On September 19, 1977, a Notice of Hearing and a copy of the proposed rules were published at 2 State Register 521, et seq.

2. All other relevant, substantive and procedural requirements of statute or rule have been complied with for the purpose of establishing jurisdiction of the subject matter to proceed to public hearing pursuant to law.

3. The authority of the Minnesota Pollution Control Agency to propose and adopt hazardous waste regulations and to amend Minn. Reg. SW 1, 2, 3, 4, 6 and 7 is set forth in Minn. Stat. §§ 115.03, 116.06, 116.07, subds. 2, 4 and 4a., 116.101, and 473.823, subds. 1 and 3 (1976).

4. The proposed regulations are designed to monitor and regulate hazardous wastes from the time that they are generated until their final disposal at an appropriate site including interim storage and transportation. This "cradle to grave" approach is designed to minimize or eliminate the dangers inherent with the disposal of hazardous waste.

5. The proposed hazardous waste rules contain provisions which: Define terms used in the rules; provide conditions under which a variance may be granted; establish the criteria for determining whether a waste is hazardous; proscribe the duties of

a generator who evaluates his wastes and finds them to be hazardous; address criteria for the location, operation and closure of a hazardous waste facility; provide for the proper transporting of hazardous wastes and methods to keep track of a generator's hazardous waste from storage through disposal; application, review and issuance procedures for the permitting of hazardous waste facilities; specify that the counties within the metropolitan Twin City area must participate in the hazardous waste program and establish procedures for Pollution Control Agency review of the hazardous waste programs of other counties which elect to participate in the program; and specify the requirements for reporting hazardous waste spills to the Pollution Control Agency and require recovery as soon as safely possible.

6. Based on an industrial waste survey jointly conducted by the Minnesota Pollution Control Agency and the Minnesota Association of Commerce and Industry, an estimated 150,000 tons of potentially hazardous waste are generated yearly in Minnesota. The major wastes reported in the survey were waste sludges, which accounted for 43 percent of the total; oils which were 20 percent of the total; solvents which accounted for 13 percent of the total; flammables which accounted for 8 percent; and oxidizers, 7 percent. A great deal of the reported disposal was environmentally unacceptable or questionable. For example, 28 percent of the reported waste disposal was by land filling. Disposal of hazardous waste at sanitary landfills is prohibited by existing regulations of the Minnesota Pollution Control Agency.

Such mismanagement may result in dangerous, harmful and/or costly incidents.

7. The PCA Staff met its burden of making an affirmative presentation of facts establishing the need for rules to regulate hazardous wastes.

The record of the within considered proceedings adequately documented incidents of the mismanagement of hazardous wastes and the dreadful results of incidents which might have been avoided had adequate regulatory control existed. See, for example,

Tr. pp. 73-165, PCA Exhibit No. 6 and PCA Exhibit No. 26 at Appendix A.

Numerous case histories of the mismanagement of hazardous waste are cited in the record. For illustrative purposes, one such case will be described hereinbelow as a general example.

In August, 1971, a six-year old girl was admitted to a Missouri children's hospital with severe bladder pain, urinary urgency, and inability to pass urine. She was listless, had been bleeding from the nose, and had diarrhea and a headache. Over a period of several hours, she gradually was able to void in small amounts, but her urine was grossly bloody. Her case was diagnosed as acute hemorrhagic cystitis with signs of focal pyelonephritis.

A significant clue in this case was that the child lived on a farm where many animals had recently died. Following the spraying of the farm's horse arena in late May with waste oil for dust control, numerous birds, cats, dogs, and horses developed a mysterious fatal illness. The child was known to have played frequently in the soil of the horse arena during the summer. At the time the child was allowed to play in the arena, no one had yet associated the oil used for dust control with the mysterious fatal illnesses falling on the abovementioned animals.

Analysis of soil samples taken from the arena initially identified a complex mixture of organic compounds and the toxic agent responsible for the outbreak of poisonings was ultimately identified as dioxin, one of the most toxic chemicals known. Based on animal studies, both the oral and the dermal lethal dose for humans have been established in the range of micrograms per kilogram body weight.

Residues containing a high concentration of the dioxin which eventually ended up in the horse arena were emptied for about one and one-half years into a large storage tank on a site in Missouri.

Periodically, the residues were hauled away by a disposal company to Louisiana for incineration. In 1971, a contract was executed with a St. Louis, Missouri firm for $4,625 to dispose

of the residues. Not actually equipped to handle waste disposal, the St. Louis firm contracted with the Bliss Waste Oil Company to remove the material. The Company is owned and operated by Russel Bliss, who deals in waste oil, lubricants, organic solvents, and transformer oils generated by automobile service stations and industrial sources. For many years, Mr. Bliss had been spraying the nonrefinable grades of waste oils on horse arenas as a means of dust control.

From February to October, 1971, the Bliss Waste Oil Company transferred six truckloads (approximately 18,000 gallons) of industrial residues containing about 300 ppm dioxin from the original storage tank to its own storage tanks in eastern Missouri. Three horse arenas and a farm road on Mr. Bliss's own property are known to have received the dioxin-contaminated oil. The dioxin concentration of the soil in the most serious affected horse arena was analyzed at about 30 ppm. The overall toll in the four disposal areas can be summarized as follows: Ten persons developed toxic symptons (two children became seriously ill), and at least 63 horses died along with 6 dogs, 12 cats, 70 chickens, hundreds of birds, numerous rodents and insects. In addition, there were 26 known abortions and six birth abnormalities among the horses.

Two lawsuits, for a total of $954,000 in compensatory and punitive damages, had been filed by the former owners of one of the horse arenas against Bliss Waste Oil Company, et al. Also, a lawsuit for $60,000 has been filed by several horse owners against one of the other two horse arenas. The estimated total financial loss, based on filed lawsuits (excluding punitive damages), is close to $500,000.

8. Having determined that there is a need for rules to regulate hazardous waste, this Report will address the issue of whether the proposed rules are reasonable.

9. In determining the reasonableness of the within considered hazardous waste rules, the Examiner applied the following meaning to the word "reasonableness": "Reasonableness" is the opposite of arbitrariness and caprice. An arbitrary and capri-

cious standard can be defined as follows:

> That standard [arbitrary and capricious] is a narrow one, to be applied only where administrative action "is not supportable on any rational basis" or where it is "willfull and unreasoning action, without consideration and in disregard of the facts or circumstances of the case."

Greenhill v. Bailey, 519 F.2d 5, 10 (8th Cir. 1975). Reasonableness, then, means to have a rational basis for the action.

In setting forth the findings that establish the rational basis for adoption of these hazardous waste rules, the Agency is not limited to only those facts that are supported by substantial evidence in the record. Rulemaking is a legislative function; it is not an adjudicatory function like a contested case is. There is a difference between the kind of facts relied on in a rulemaking hearing and the kind of facts relied on in an adjudication. Professor Kenneth Culp Davis identifies this difference:

> Two main elements in rulemaking are (1) facts, and (2) ideas about policies. The two are generally interwoven in such a degree that in some parts of the whole problem of what to do, they are inseparable. Even so, a main element in rulemaking is necessarily the policy choice that the administrator must make. Adoption of a rule may require some understanding of facts, but it always requires legislating. Courts must leave administrators free to legislate, within the limits of rationality. And legislating inevitably involves the addition of something to the facts in the rulemaking record.

K. Davis, Administrative Law of the Seventies, (Cumulative Supp. 1977) (emphasis in original).

The Minnesota Supreme Court has recognized the difference between legislative facts and adjudicatory facts and has identified the support needed to uphold the two kinds of facts. In St. Paul Area Chamber of Commerce v. Minnesota Public Service Comm'n., 251 N.W.2d 350 (Minn. 1977), the Court said:

> [T]he substantial evidence test of § 15.0425 [is] applicable to commission decisions only when it is acting in a quasi-judicial manner, in a role similar to that of a trial judge sitting without a jury. In cases where the commission acts primarily in a judicial capacity, that is, hearing the views of opposing sides presented in the form of written and oral testimony, examining the record, and making findings of fact, the administrative process is best served by allowing the district court to apply the substantial evidence standard on review. . . .

> . . .[H]owever, rate allocation is not a judicial or quasi-judicial function. Once revenue requirements have been determined it remains to decide how, and from whom, the additional revenue is to be obtained. It is at this point that many countervailing considerations come into play. The commission may then balance factors such as cost of service, ability to pay, tax consequences, and ability to pass on increases in order to achieve a fair and reasonable allocation of the increase among consumer classes. . . .It is clear that when the commission acts in this area it is operating in a legislative capacity, as the above cases have stated. The careful balancing of public policies and private needs is not a matter for the courts, unless statutory authority has been exceeded or discretion abused. . . .In ascertaining whether or not the statute has been contravened, the district court must give wide latitude to the commission in allowing it to consider many factors which might not ordinarily be considered by a court, as we have explained above. This is so because, while the court is qualified to review agency findings when an agency acts in a quasi-judicial manner in factual matters, it is not so qualififed to review legislative judgments when social policies must be weighed in the balance.

Id. at 356-357.

In the within considered rulemaking proceeding, many of the facts are legislative facts --policy decisions and judgments. A dermal toxicity value that distinguishes a hazardous waste from a nonhazardous waste is a legislative fact. There is no one right answer--there are only reasonable answers.

In another Public Service Commission ratemaking case, Northwestern Bell Telephone Co. v. State, 253 N.W.2d 815 (Minn. 1977), the Minnesota Supreme Court distinguished the two kinds of facts involved in exercising a legislative function. There the Court said:

> In determining the extent of the allowable adjustment, it appears that the PSC was acting in both a judicial and a legislative capacity. In finding as a fact the amount of the 1974 impact of the contract, the PSC's decision was amply supported by the evidence. In deciding to limit the adjustment to a one-year period, the PSC determined as a matter of public policy that changes occurring more than one year beyond the test year would best be considered in proceedings taking into account all of the facts necessary to accurately set Bell's rates. This determination cannot be said to be arbitrary or unjust. . . .

Id. at 822. See also, Northwestern Bell Telephone Co. v. State, 299 Minn. 1, 216 N.W.2d 841 (1974) and Reserve Mining Co. v. Herbst, 256 N.W.2d 808 (Minn. 1977).

Although the federal rulemaking process differs from that of Minnesota, it would be helpful to examine the federal system.

An example of a federal agency acting on legislative facts is Mourning v. Family Publications Service, Inc., 411 U.S. 356 (1973), where the U.S. Supreme Court upheld regulations of the Federal Reserve Board governing credit transactions of more than four installments. Professor Davis' discussion of the Mourning case is helpful:

> [T]he Supreme Court had no power to change "four" to three or five, because Congress had delegated that power to the Board and the Board had made its determination. On the question of what the number should be, the Court could do no more than determine whether "four" was arbitrary, capricious, an abuse of discretion, or otherwise not in accordance with law.

K. Davis, Administrative Law of the Seventies, 206 (Cumulative Supp. 1977).

Dry Color Manufacturers' Ass'n v. Department of Labor, 486 F.2d 98 (3rd Cir. 1973), involved temporary emergency standards of the Department of Labor intended to prevent exposure to 14 chemicals found to be carcinogens. In striking down the regulations, the Court essentially said the Department did not have sufficient reasons for the regulations. Davis, however, is critical of the Court's decision:

> If carcinogenicity of the chemicals in humans can be neither proved nor disproved by scientific evidence, the problem for rulemakers is not one of fact; it is one of making a legislative choice of policy in light of the absence of evidence. When an agency is assigned the task of making rules that are in the public interest, it seldom can prove with evidence what is in the public interest; it has to use its policy preferences when proof is lacking.

K. Davis, Administrative Law of the Seventies, 674 (1976).

Some of the recent cases involving rulemaking by federal agencies in the environmental and health areas indicate the kind of latitude agencies have in making these legislative policy decisions. A leading example is Ethyl Corp. v. EPA, 541 F.2d 1, 8 E.R.C. 1785 (D.C. Cir. 1976), where the Court upheld regulations of the EPA requiring a reduction of lead in gasoline.

> Man's ability to alter his environment has developed far more rapidly than his ability to foresee with certainty the effects of his alterations. It is only recently that we have begun to appreciate the danger posed by unregulated modification of the world around us, and have created watchdog agencies whose task it is to warn us, and protect

> us, when technological "advances" present dangers unappreciated--or unrevealed--by their supporters. Such agencies, unequipped with crystal balls and unable to read the future, are nonetheless charged with evaluating the effects of unprecedented environmental modifications, often made on a massive scale. Necessarily, they must deal with predictions and uncertainty, with developing evidence, with conflicting evidence, and, sometimes, with little or no evidence at all. Today we address the scope of the power delegated one such watchdog, the Environmental Protection Agency (EPA). We must determine the certainty required by the Clean Air Act before EPA may act to protect the health of our populace from the lead particulate emissions of automobiles.
>
> * * *
>
> . . .We find that deletion of the findings requirement for action under Section 211(c)(1)(a) [of the Clean Air Act] was a recognition by Congress that a determination of endangerment to public health is necessarily a question of policy that is to be based on an assessment of risks and that should not be bound by either the procedural or the substantive rigor proper for questions of fact.
>
> * * *
>
> . . .The Administrator may apply his expertise to draw conclusions from suspected, but not completely substantiated, relationships between facts, from trends among facts, from theoretical projections from imperfect data, from probative preliminary data not yet certifiable as "fact", and the like. We believe that a conclusion so drawn--a risk assessment--may, if rational, form the basis for health-related regulations. . . .
>
> All of this is not to say that Congress left the Administrator free to set policy on his own terms. To the contrary, the policy guidelines are largely set, both in the statutory term "will endanger" and in the relationship of that term to other sections of the Clean Air Act. These prescriptions direct the Administrator's actions. Operating within the prescribed guidelines, he must consider all the information available to him. Some of the information will be factual, but much of it will be more speculative--scientific estimates and "guesstimates" of probable harm, hypotheses based on still-developing data, etc. Ultimately he must act, in part on "factual isues", but largely "on choices of policy, on an assessment of risks, [and] on predictions dealing with matters on the frontiers of scientific knowledge . . . ." Amoco Oil Co. v. EPA, supra 163 U.S. App. D. C. at 181, 501 F.2d at 741. A standard of danger--fear of uncertain or unknown harm--contemplates no more.

Id. at 6, 24, and 28, 8 E.R.C. at 1786, 1801, and 1804-1805. The Amococase cited in Ethyl was another case by D. C. Circuit in which the court upheld for the most part regulations of EPA prohibiting use of leaded gasoline in automobiles fitted with

catalytic converters. Amoco Oil Co. v. EPA, 501 F.2d 722, 6 E.R.C. 1481 (D.C. Cir. 1974).

Another leading case in this area, and one relied on by the Ethyl court, is Industrial Union Department, AFL-CIO v. Hodgson, 499 F.2d 467 (D.C. Cir. 1974), involving a review of asbestos regulations promulgated by the Secretary of Labor. There the court said:

> From extensive and often conflicting evidence, the Secretary in this case made numerous factual determinations. With respect to some of those questions, the evidence was such that the task consisted primarily of evaluating the data and drawing conclusions from it. The court can review that data in the record and determine whether it reflects substantial support for the Secretary's findings. But some of the questions involved in the promulgation of these standards are on the frontiers of scientific knowledge, and consequently as to them insufficient data is presently available to make a fully informed factual determination. Decision making must in that circumstance depend to a greater extent upon policy judgments and less upon purely factual analysis.

Id. at 474 (footnote omitted).

10. Note must be taken that during the hearing process and before the close of the record, the Pollution Control Agency made various amendments to the proposed rules as originally published for hearing.

One of the principal benefits of a public hearing process is that it gives the administrator the benefit of criticisms and suggestions from representatives of the industries that will be regulated. It was just such a give-and-take process that prompted the Pollution Control Agency to amend the rules as finally proposed for adoption.

Because of such amendments, it will be necessary during certain portions of this Report, to specify whether an examination of the "reasonableness" of the proposed rules is being examined in light of the original proposal or the rules as finally proposed for adoption.

11. In determining the issue of "reasonableness", this Report will first examine the reasonableness of the wastes regulated by reason of being designated as "hazardous" pursuant to the proposed rules.

12. There are two basic approaches utilized in selecting methodologies for identification of criteria to be used in defining hazardous wastes.

The first approach is a listing wherein materials are listed as hazardous. Any waste then found to come under the generic heading found in the list is ipso facto determined to be hazardous. This approach is found to have several strengths and several weaknesses. The strengths include the fact that it is very easily implemented in that at any one time the generators of waste have before them a specific list. Simply by determining the generic origin of their waste, a generator could determine whether the waste is held to be hazardous or nonhazardous. The disadvantage of this type of approach is its inflexibility and its inequity in that wastes, while coming under a single generic classification, are not by any means similar in their intrinsic properties. There may be many wastes which are defined as operating waste, industrial sludges, and so forth which vary greatly in their properties. Consequently, there is a great deal of equity lost when an entire category is classified as hazardous or nonhazardous.

Similarly, a listing approach is somewhat inflexible to the continuing development of new chemicals and new waste streams as processes are modified and products are generated.

Finally, one cannot establish a listing approach at the outset because it is first necessary to decide how the list will be generated. Typically, a list would be generated through the use of the second type of approach in defining hazardous wastes. And that is the use of criteria.

The criteria approach depends upon the selection of threshhold values for specific characteristics of waste material, such that any waste at any time can be submitted to a series of tests, the results of which would thereby be compared with the criteria, defining whether the waste falls within or without the category definition.

There are disadvantages to the criteria approach in that it can be expensive to implement because it could require the

analysis of a specific waste to determine whether it does or does not qualify by the criteria established.

13. The proposed rules reasonably utilize a combination of the list and criteria approaches. An advantage of a combination of a list and criteria approach is that it allows consideration of compounds which are difficult to test because of costs, or availability, or lack of availability of testing procedures. Another advantage of the combination is that it applies the best of each system while attempting to minimize the disadvantages of each.

14. Having selected a combination list and criteria approach, one is faced with two possible alternatives for generating criteria.

The first alternative is to consider compatibility with existing regulations and definitions. There are numerous categories of hazardous substances, hazardous materials, toxic pollutants, toxic substances, etc. defined by Federal Law, state law and the various regulatory agencies. It is possible to select criteria and a definition for hazardous wastes based simply on the desire to have levels that are compatible with existing definitions. In so doing, however, one accepts the rationale and the methodology employed by that agency for materials which are used in commerce or exposed to the public in a manner that might be different than what would be expected from normal waste management practices. In other words, waste materials will be processed and managed in a unique set of circumstances, and if a hazard is not appropriate for that set of circumstances, use of criteria based on that hazard would not be equitable.

Therefore, it is found that the second approach is preferable. The second approach being the development of scenarios or the probable sequence of events which could occur during normal management of wastes and the determination of how toxic a material would have to be before it would present a hazard under those circumstances.

The Pollution Control Agency reasonably and properly took an approach to develop reasonable scenarios for the management of wastes to determine the range in which the hazardous criteria should fall, then to look at existing definitions, existing criteria by other agencies within that range, and adjust the criteria accordingly so that the generator of the waste, the transporter of the waste and the disposer of the waste will have the maximum opportunity afforded them of dealing with consistent sets of criteria and categorizations.

15. Generally, the proposed hazardous waste rules classify hazardous wastes according to three different categories.

The first category (See Paragraph No. 16) is two lists of substances that are regulated to provide protection against possible neoplastigenic, teratogenic and mutagenic wastes in List one and biocentrative effects of wastes in List Two.

The second category (See Paragraphs No. 17, 18, 19 and 20) that provides for test value criteria is designed to regulate and protect against possible toxic, irritative, corrosive, and flammable effects of wastes.

The third category (See Paragraph No. 21), the generic category criteria, is designed to regulate and protect against possible explosive, oxidative and general health hazards created by unregulated waste disposal.

16. [List Approach] List One in proposed HW 2.B.1. which specifies specific wastes as hazardous is the result of consideration, in part, of carcinogens which are basically treated under a list approach. The chemicals shown in list one are those regulated by OSHA and those recommended for regulation by NIOSH as carcinogens. Although the number of suspected carcinogens is very large, the compounds listed are those for which a strong case for carcinogenicity and, therefore, inclusion in this list can be made. Furthermore, it is important to note that there is no simple accepted test currently available for the evaluation of the carcinogenic potential of wastes. There is also inadequate dose response data available at this time to determine a safe level of exposure to a carcinogen.

List Two of proposed HW 2. B.2. which specifies specific wastes as hazardous, is a result of consideration of bioconcentrative materials. The compounds shown in List Two are those identified by the United States Environmental Protection Agency as being hazardous because of the potential for bioconcentration. The end result of bioconcentration is that as one examines the food chain, a hazardous substance can become concentrated to a higher degree in each succeeding organism participating in the food chain. It is also known that the toxic effects or the primary toxic effects occur in the species residing at the top of the food chain which can lead to the reduction or extinction of the living organism at the top of any particular food chain examined.

There is no simple test adequate to evaluate the bioconcentrative potential of wastes. Much of what is known about bioconcentration has been derived from actual field experience and this knowledge has been used by the United States Environmental Protection Agency in identifying bioconcentrative chemicals. It was reasonably established that all substances specified in List Two are bioconcentrative and detrimental.

17. A major parameter considered was toxicity. Toxicology can be defined as the science of poisons; it is concerned with for example, the actions of poisons on living systems; the identification and quantitive estimation of toxic materials in tissues, body fluids, foods, air, water, etc.; antidotes and other remedial measures employed to counteract the effects of poison and, finally, the establishment of safe limits of exposure to potentially toxic materials. A substance may be considered a poison when it gains access to a living system in sufficient quantities so that it consistently and adversely alters the function of that system.

Two principles of toxicology are particularly relevant. The first is that the toxicity of chemicals is known to vary widely. In some cases, exposure to extremely small amounts of a chemical may prove harmful. For example, tetrachlorodioxin is toxic to some animal species in doses of less than one

microgram or one-millionth of a gram per kilogram of body weight; this amounts to about one-15 millionth of an ounce per pound of body weight. Alternatively, large amounts of other chemicals may be required to produce toxicity; for example, it is well known that common table salt, if injected in large enough quantity may be toxic or even lethal if consumed in large quantities.

A second fundamental principle is that the harmful effects of substances are dose-dependent; which means that the effects will depend on the amount of the substance absorbed into the body. Thus, as the dose or intensity of the exposure is increased, the degree of damage is also increased. For example, small doses of alcohol produce a mild degree of central nervous system depression in human beings; ingestion of a larger dose produces a more profound degree of nervous system depression so that a person may walk or speak with difficulty; and a much larger dose may produce unconsciousness or even death. The first parameter of toxicity considered was oral toxicity. Efforts were reasonably focused on examining acute toxicity as opposed to chronic exposure. The value selected was the use of an oral LD_{50}. There were two reasonable scenarios considered under which materials were foreseen to present acute oral toxicity hazards on the public via operators of waste management sites.

First, the direct dosing type of hazard where a container of hazardous waste could lose its integrity and essentially subject a waste management site operator to direct intake of the material.

Using a standard intake of 10 cubic centimeters, a 100-kilogram man is exposed to materials which would be toxic to him if they had an oral LD_{50} of 100 milograms per kilogram body weight.

The second scenario considered was the potential of burial of hazardous waste in a landfill site, subsequent leaching of the material to an aquifer, movement down the aquifer to a well used for potable water supply.

Historically, leachate does not reach a half- mile perim-

eter at levels above 10,000 parts per million, and therefore a conservative estimate is to assume an equivalent dilution of 100 to 1.

Referring to a 100- kilogram man, he is consuming two and one/half liters of water each day, both in direct consumption and in the cooking of his meals. Consequently, the material would have to be toxic at 250 milograms per kilogram on an oral LD_{50} basis to threaten that individual with lethal effects from one day's consumption of groundwater contaminated by leachate from the hazardous waste landfill.

Dealing with lethal effects and dealing on the edge of lethal effects does not provide ample safety for these types of proposed rules, and there there is likelihood that small children will be using the potable water well, there is also a great likelihood that sublethal effects would be evidenced at much lower doses.

Additionally, there are other classification systems which use 500 milograms per kilogram body weight as criteria for defining materials as toxic. Consequently, the Pollution Control Agency adjusts the 250 criteria to 500 milograms per kilogram of body weight.

The use of such criteria levels is reasonable and justified because the exposure route, via potentially contaminated groundwater in potable water wells, is a more insidious type of exposure than the direct spill into a surface water wherein the event is known and reported so that the downstream user can be notified. The potential for leaching into groundwater does not come with such warning and therefore a measure of safety is justified.

In addition to considering oral toxicity, parameters were considered dealing with dermal toxicity. Again, a common measure utilized was the LD_{50} value.

The two scenarios considered regarding dermal toxicity were direct dosing of the operator or individuals at a hazardous waste site, and potential leachate contamination of groundwater subsequently used for bathing and washing purposes.

In the direct dousing scenario, a 100-kilogram man was considered. This man would be threatened with lethality if the substance was toxic at 1,000 milograms per kilogram body weight or less. This, in essence, is one-tenth of a percent of his body weight.

The second scenario dealt with direct exposure to contaminated groundwater for the purposes of bathing and washing. Standard usage rates in the American home run from three to seven times the water used for bathing and washing than is used for potable water used on a daily basis. Consequently, if a material was toxic via the dermal exposure route, an individual using contaminated water would be exposed to three to seven times the water he would be exposed to if it were toxic only through the drinking, consumptive route. However, the dermal route is less efficient than the oral route.

Consequently, nontoxic materials from an acute oral standpoint should be defined as those with an LD_{50} of greater than 5,000 milograms per kilogram body weight. Nontoxic materials from a dermal exposure route are those with an LD_{50} value of 2800 milograms per kilogram body weight, suggesting the efficiency is half that of oral dosing. Therefore, the three to seven times water use for contact purposes as opposed to potable water supply are, in effect, one and one-half to three and one-half times. Existing criteria proposed by the United States Environmental Protection Agency for defining hazardous substances uses limits for dermal toxicity four times the limit established for oral toxicity. Thus, they define as a hazardous substance a material with an oral LD_{50} of 50 milograms per kilogram body weight or less. They define as a hazardous substance materials from a dermal toxicity standpoint as those with an LD_{50} of 200 milograms per kilogram body weight or less. As stated above, the oral toxicity scenario developed was a criteria level of 250 milograms per kilogram of body weight which was adjusted to 500. The same multiplier of four used by the EPA on the 250, result in the same value one would derive with the direct dosing, that is 1,000 milograms per kilogram body weight.

Consequently, it was recommended to use 1,000 as criteria for determining a substance to be hazardous if it has a dermal toxicity at that level or less.

The problem of determining acceptable toxicity limits was appropriately considered by the Pollution Control Agency. Although lethality was used as a end-point in the evaluation of wastes, it is obviously essential to select toxicity limits so as to ensure not only protection from the lethal effects of substances so far as exposed persons are concerned, but also from substantial potential or present acute non-lethal effects. Furthermore, it is reasonable and necessary that toxicity limits offer protection from chronic or long-term effects of exposure to hazardous materials.

A variety of toxicity limits are used by federal regulatory agencies for the toxicological evaluation of wastes. It is found that such limits may be inadequate so far as hazardous wastes are concerned. For example, an oral LD_{50} of 50 milograms per kilogram body weight is used by some agencies. This means that about five grams or a teaspoon of the material ingested by a 100-kilogram man may be expected to produce severe or even fatal poisoning. Consideration of hazardous waste exposure scenarios suggests that such an exposure could occur in the handling of wastes.

Thus, in setting toxicity limits, one must consider both conditions and probability of exposure. In this context, it is reasonable and necessary that the toxicity limit must be higher than the probable exposure in order to provide an adequate safety factor to ensure protection from non-lethal effects.

In addition to oral and dermal toxicity, the Agency considered toxicity via the inhalation route. Once again, when considering whether to deal with chronic or acute data, it was reasonably decided to deal with acute data. Using an LC_{50} criteria, it was reasonably determined that if a material was toxic at 100 milograms per cubic meter, the operator of a disposal site suffering such exposure could receive lethal effects. Utilizing a safety factor of 20, which is the minimum recommended

safety factor for extrapolation of acute data to chronic or sublethal effects, materials with an LC_{50} value as a dust of 2,000 milograms per cubic meter or less, must be considered as hazardous wastes.

In looking at substances which are exposed as a vapor rather than a dust, it was reasonably decided to use the National Academy of Sciences' definition that materials with a TLV (an acceptable limit concentration in air for exposure over an eight-hour period of working personnel to a substance) value of 100 ppm or less should be considered as toxic substances. It should be noted that there is already a safety factor involved in that TLV value. The threshhold limit value is established by looking at the LC_{50} data, looking at lethal concentrations, applying the appropriate safety factors, and then setting the threshhold limit value as that value that is acceptable under work conditions for an eight-hour day.

The National Academy says that materials with a TLV of 100 ppm or less should be considered toxic. Again, looking at shorter exposure periods and higher concentrations, it is logical to institute a constant product of exposure time and concentration and reason that a criteria level of 1,000 ppm or less for vapors to be considered as hazardous waste.

The Agency also looked into aquatic toxicity. Once again, due to difficulty in implementing chronic exposure criteria, it was reasonably decided to select the use of acute data. Specifically, the use of 96 hours LC_{50} data. The scenario considered leachate movement into the groundwater and subsequent entry to the surface water where a viable aquatic community may exist. Once again, using the reasonable dilution factor of 10,000 to 1 and reasonably determining that the threshhold should be 100 ppm; a waste should be considered hazardous if it exhibits a 96-hour LC_{50} of 100 ppm or less. Use of the 100 ppm puts Minnesota Rules in compliance with Grades 3 and 4 of the National Academy of Sciences' categorization which are defined as toxic and moderately toxic substances, and also categories A, B and C of the IMCO categorization system which is applied to

products in bulk commerce that are shipped across the ocean.

18. [Test Value Criteria Approach] The Pollution Control Agency also examined the irritative properties of noncorrosive materials. Concern was with the ability of a waste when in direct contact with a disposal site operator or other individuals to provide reversible injury to a biological membrane at the site of contact. The proposed rule reasonably adopts criteria based on practical experience of resulting first and second degree burns and criteria set forth in 16 C.F.R. § 1500.41 (1977). Materials meeting the criteria are considered hazardous under the proposed rules.

19. [Test Value Criteria Approach] The Agency also considered the parameter of acidity or basicity from a corrosive standpoint. Accordingly, there are three reasonable scenarios; the first being direct contact. It was reasonably determined that primary irritation can be obtained from a substance which evidences a pH of less than 2.5 or greater than 11.5. However, it is noted that those levels are determined with tests on corneal membranes, which apply to the eye as opposed to contact with the epidermis or outside skin.

A second scenario is the potential for pH contamination of groundwater subsequently used for domestic or recreational purposes. Once again, it is reasonable to have considered an effective dilution of 100 to 1. The National Academy of Sciences recommended that water used for domestic use or bathing purposes not have a pH value of less than five or greater than nine. Accordingly, instituting the dilution factor of 100, suggests that a material is hazardous if in its present form prior to leaching into the groundwater it has a pH of less than three or greater than 11.

The third scenario reasonably considered was the possibility that acid or base properties of a hazardous waste could evidence effects on aquatic communities exposed via contamination of an aquifer which subsequently fed surface waters. It now becomes necessary to extend the scenario beyond the effective dilution of 100 to 1 for movement of leachate from a landfill

area to the groundwater aquifer. However, groundwater, as it enters surface water, will once again be diluted and credit for that dilution must be made.

There are springs which receive this entire supply from groundwater aquifers, and therefore would evidence no dilution upon entering of the leachate. However, it is more often the case that groundwater at any one point in the surface water will constitute less than one percent of the total flow in that water volume. It is reasonable to select the more conservative estimate and thereby credit the surface water with an additional dilution of 100 to 1. Thus, movement from a landfill to surface water which would sustain a viable aquatic community results in leachate diluted by a factor of 10,000. The National Academy of Sciences has suggested that viable aquatic communities cannot be mainted if the pH level falls below 6.5 or is greater than 8.5. Instituting the 10,000 to 1 dilution factor, it is reasonable to conclude that a material would be a hazardous waste if it has a pH value of less than 2.5 or greater than 12.5.

Considering the above scenarios, the Agency appropriately elected to define the criteria for hazardous waste as those materials having a pH value of less than three or greater than 12.

20. [Test Value Criteria Approach] The Pollution Control Agency also considered flammability in determining which materials were to be classified as hazardous. The Agency reasonably concluded to combine the distinction made by the Federal Department of Transportation as between materials that are flammable and materials that are combustible. The Pollution Control Agency also included the definition used by the Federal Department of Transportation of a flammable solid.

21. [Generic Category Criteria Approach] The Pollution Control Agency reasonably clasified as hazardous, explosive materials including, but not limited to, explosives as defined in 49 C.F.R. § 173.50 (1976), and compressed gas as defined in 49 C.F.R. § 173.300 (1976).

22. [Generic Category Criteria] The Pollution Control

Agency reasonably classified oxidative materials as hazardous. Oxidative materials are reasonably defined as those materials with the property to readily supply oxygen to a reaction in the absence of air. Specific oxidative materials are set forth but the list is reasonably nonexclusive in that materials not listed may also be classified as oxidative.

23. [Generic Category Criteria] Both petroleum waste and used crankcase oil is classified under the proposed rules as being hazardous. This classification is reasonable based in large part on the fact that oils present special waste management problems in that they are persistent and have historically shown a tendency to damage fishing resources when present in water resulting from the tainting of fish flesh. Furthermore, these hazardous materials could contain a myriad of harmful and hazardous components.

Additionally, the Pollution Control Agency classifies as hazardous waste that is a mixture of small amounts of unrelated chemicals such that the description of any sample or set of samples is not representative of the total waste.

24. [Generic Category Criteria] The last classification of wastes which are proposed to be regulated as hazardous is found in HW 2.B.5. The proposed rule is very general and provides that any other waste not specified as hazardous under other provisions of the rules may be classified as "hazardous waste" if the Director of the Pollution Control Agency (see HW 2.B.2.) determines that the waste has one or more of the properties of a hazardous waste or because the waste cannot be handled by routine waste management techniques because it poses a substantial or potential hazard to human health or other living organisms.

Under the rationale used in this Report to determine "reasonableness", the Hearing Examiner finds this proposed rule is not a reasonable policy decision by the Agency.

Furthermore, HW 2.B.5. is unreasonable in that the Agency has not shown nor can it show that it considered the possible economic impacts associated with this proposed rule because there is no way of determining what wastes, if any, would be

classified as hazardous under its provisions.

It is found that the Board of the Pollution Control Agency should consider revising proposed HW 2.B.5. to allow for public hearing before a waste becomes permanently classified as hazardous under the provisions of this rule. In other words, because protection of the environment may necessitate immediate but temporary action on behalf of the Director, the Agency must be allowed to act swiftly to classify an otherwise nonhazardous waste as hazardous but provision should be made thereafter for a public hearing process before such classified hazardous waste is permanently classified as hazardous.

Such suggested amendment would eliminate arguments that the proposed rule allows too much discretion by the Agency.

The federal government and most states do not provide for the structured type of rulemaking hearing that is found in Minnesota. Only a few states, including Iowa, Massachussetts, Minnesota, Nebraska, Ohio, Virginia and Wisconsin have structured rulemaking hearings wherein legislation mandates rigid procedural requirements. Minnesota has quite rigid procedural requirements including publication of notice of intent to solicit outside information, prior published notice of the public hearings, full and complete public participation in the form of verbal and written comments, questioning of agency witnesses, a formal review by the Minnesota Chief Hearing Examiner on the issue of "substantial change", the proposing agency has a statutory burden to affirmatively show the need and reasonableness of the proposed rules, and there is a formal review by the Office of the Minnesota Attorney General. The foregoing shows a strong legislative intent in Minnesota for all forms of rulemaking to encompass full and complete public participation under structured conditions. Proposed HW 2.B.5. would better comport with apparent legislative intent if it allowed the Agency to make an emergency-type determination that a particular waste is hazardous; followed by a public hearing on this issue of whether such waste should be permanently considered hazardous waste. The Agency Board might also consider making provision for the regu-

lated party to waive public hearing and thereby become bound by the Agency decision. Such waiver would cause the waste to be considered hazardous for purposes of the entire regulation.

As HW 2.B.5. has been finally proposed, it allows an unreasonable amount of discretion for the Agency to classify and regulate a waste as hazardous thereby evoking a rule with force and effect of law without the benefit of public rulemaking procedures.

25. Not every waste which could have logically been classified as "hazardous waste" falls under the impact of the within considered proposed rules. Some such wastes are not currently regulated; are already regulated by existing rules of such agencies as the Pollution Control Agency and the Department of Health; or will be the subject of regulatory control under rules that will be proposed in the future by the Pollution Control Agency.

The fact that the proposed rules do not cover all waste substances that may be considered "hazardous waste" is not unreasonable. Classification and regulation may take one step at a time, addressing itself to those phases of a problem which can be reasonably administered by the agency and seem most acute to the regulatory body.

26. Selection of those wastes which are classified as "hazardous" in the within considered proposed rules and the criteria applied to determine whether or not a particular waste is hazardous was, in large part, based upon a report issued by Battelle Pacific Northwest Laboratories entitled, "Toxicological Criteria for Defining Hazardous Wastes". The report is PCA Exhibit 26.

The Battelle Report contains the following "LEGAL NOTICE" on its inside front cover:

> This report was prepared by Battelle as an account of sponsored research activities. Neither Sponsor nor Battelle nor any person acting on behalf of either: (a) makes any warranty or representation, express or implied, with respect to the accuracy, completeness, or usefulness of the information contained in this report, or that the use of any information, apparatus, process, or composition disclosed in this report may not infringe privately owned rights; or (b) assumes any liabilities with respect to the use of, or for damages resulting from the use of, any information, apparatus, process, or composition disclosed in this report.

During the hearing process, the "LEGAL NOTICE" was referred to as the Battelle disclaimer. Although issues concerning said disclaimer were raised and later dropped by members of the public participating in the hearing process, the Hearing Examiner determines that at least one principal issue raised by the so-called disclaimer must be addressed. The issue is whether such disclaimer is a fatal defect. The issue becomes cogent because statute requires the Agency to make an affirmative presentation of facts establishing the reasonableness of the proposed rules. Thus, is it reasonable to bottom proposed rules on a scientific/technical report which states on its face that it: ". . . makes [no] warranty or representation, express or implied, with respect to the accuracy, completeness, or usefulness of the information contained in [the] report. . . ."

The Hearing Examiner finds that in this particular proceeding, the so-called disclaimer is not a fatal defect. Aside from the report issued by Battelle, there is other supporting evidence in the record of the within proceedings for the selection of many of those wastes which are regulated as hazardous and for the criteria established to determine whether or not a particular waste falls under the purview of the proposed rules.

It was apparent to the Hearing Examiner that the so-called disclaimer was designed to limit any liability that may befall Battelle. The so-called disclaimer was, in fact, an exculpatory clause wherein Battelle implied that they had the expertise to deal with the subject matter at hand but desired to exculpate themselves where the expertise was exercised in good faith.

The subject matter addressed in PCA Exhibit 26 was the subject of intensive questioning by the public. Neither such questioning nor any rebuttal testimony convinced the Hearing Examiner that the body of text of PCA Exhibit 26 was anything other than reasonable scientific and technical data, conclusions and recommendations. On its face, the technical report appears logical and well-reasoned and contains substantial supporting references.

Notwithstanding the Findings contained in this Paragraph,

it is noted that the State paid substantial sums of money for the research conducted by Battelle in creating the technical report. In the future, when contracts for a consultant services are executed by the State, it would be wise to use all practical means of avoiding an end product which contains exculpatory language of the type involved in this matter.

27. With the exception of HW 2.B.5., it is found that the designation of those wastes which are classified as "hazardous" and the criteria for determining whether a waste is hazardous under the proposed rules is a reasonable implementation of the policy decisions which the Pollution Control Agency must make and that the record contains an affirmative presentation of facts which shows the reasonableness thereof. The determination of reasonableness specifically applies to the rules as finally proposed by PCA Staff.

28. In addition to establishing which wastes are "hazardous", the proposed rules exempt certain wastes from being regulated as "hazardous wastes". The exemptions in the rules as finally proposed by PCA Staff are found to be reasonable.

The exemptions include wastes that could not administratively be regulated by the Pollution Control Agency such as normal refuse from households. Other exempt wastes include wastes which cannot technically and economically fall under the purview of the proposed rules and wastes which are already regulated through such vehicles as NPDES Permits or State Disposal System Permits.

29. After having considered the reasonableness of what is or is not classified as a hazardous substance under the proposed rules, one should consider whether the determination of what is and is not a "waste" is reasonable under the proposed rules.

For example, HW 2.B.1. as originally Noticed for Hearing and proposed, set forth a list (List One) of substances to be regulated as hazardous waste and specified that:

> A waste that contains a component specified in List 1 is a hazardous waste if the concentration of that component in any part of the waste at any time during or after its production exceeds 0.1% by weight. [Emphasis added]

The above-quoted originally proposed rule is ambiguous and it can be argued that the original proposal addressed not only what would normally be considered "waste"; but brought within its purview substances contained in both raw materials and the final product.

The definition of "waste" in the proposed rules comports with the definition of hazardous waste found in Minn. Stat. § 116.06, subd. 13 (1976). The proposed definition of waste is:

> Any discarded material including, but not limited to solids, semi-solids, sludges, liquids, gases, and their vapors, mists, or dusts.

A key phrase in the definition of "waste" is" discarded material". It cannot be reasonably argued that discarded material should be interpreted to include raw materials or materials in a finished product. Thus, HW 2.B.1., as originally proposed, exceeded the ambit of hazardous waste subject matter. The rules as finally proposed by PCA Staff amended the improprieties of HW 2.B.1.

Based on the rules as finally proposed by PCA Staff, it is found that the express use of the word "waste" in the rules is reasonable. However, a similar finding could not be made if the Hearing Examiner only considered the rules as originally Noticed for Hearing and proposed.

Notwithstanding the finding of reasonableness as to the manner in which the word "waste" is expressly utilized in the proposed rules, a determination must be made as to the way in which the Pollution Control Agency intends to interpret the word in situations of doubt. For example, when is a particular substance a waste? When should the Pollution Control Agency regard an entity as having "discarded" a particular substance or material?

A coal-fired electric generating plant has as its principal purpose a conversion of energy stored in coal to electric energy for end-use customers. Flyash and bottom ash results naturally from this process. The utility may have no further use of such by-product. However, part of the by-product may be utilized for building roadways and highways. Is such by-product

then a waste? Would it depend on whether or not the utility pays a fee for having the by-product removed; receives a fee from the parties desiring the by-product; or merely gives the by-product to the party desiring its use? During the hearings, witnesses for the Pollution Control Agency indicated that such by-product is a waste.

Consider for a moment an oil refinery. The principal objective of an oil refinery may be to produce gasoline and fuel oils. A natural by-product resulting from the necessary distilling process may be asphalt. The oil refinery is not specifically designed nor is it in business specifically to produce asphalt. However, when the crude product is distilled, leaving nothing but asphalt, should this by-product be considered a waste?

Many situations comparable to the above examples can be envisioned. The proposed rules do not adequately address the issue as to when something becomes a waste. This determination should not be left to the visceral reaction of individuals employed by the Agency.

Accordingly, it is found that the proposed rules should be made more specific so as to at least establish guidelines for the determination of when something is or is not a waste.

30. With the exceptions mentioned, the above Findings support the proposition the proposed rules, as finally submitted, amended and supported by PCA Staff, are reasonable from a technological point of view.

The next determination of reasonableness is whether or not the proposed rules are economically reasonable.

31. Before making Findings concerning the reasonableness of the economics involved in the proposed rules, the Hearing Examiner feels that it is necessary to specify the way in which he applied the reasonableness test. It is important because the determinations of reasonableness regarding the economics are not as clear cut as, for example, was the case when determining the reasonableness of what is or is not hazardous waste under the rules as finally proposed. Because the determinations made

regarding economics are considered by the Hearing Examiner to be a "close call", the way in which he examines the issue is particularly set forth.

In deciding to what degree the Pollution Control Agency has a substantive burden to establish the economic impact of the proposed rules, the Hearing Examiner looked to the following statutes for guidance:

> In exercising all its powers the Pollution Control Agency shall give due consideration to the establishment, maintenance, operation and expansion of business, commerce, trade, industry, traffic and other economic factors and other material matters affecting the feasibility and practicability of any proposed action, including, but not limited to, the burden on a municipality of any tax which may result therefrom, and shall take or provide for such action as may be reasonable, feasible, and practical under the circumstances. Minn. Stat. § 116.07, subd. 6 (1976). [Emphasis added]

The Hearing Examiner also looked to Minn. Stat. § 15.0412, subd. 4 (1976) which reads, in part:

> No rule shall be adopted by any agency unless the agency first holds a public hearing thereon, affording all affected interests an opportunity to participate. . . .At the public hearing the agency shall make an affirmative presentation of facts establishing the need for and reasonableness of the rule proposed for adoption and fulfilling any relevant substantive or procedural requirements imposed on the agency by law or rule. . . . [Emphasis added]

The issue then is whether the agency must make an affirmative presentation of facts establishing the economic reasonableness of the proposed rules or whether the agency merely has to show that it reasonably gave "due consideration" to the economic impact of the proposed rules. The latter standard or burden of proof is obviously less stringent than the former.

In determining which standard to apply, the Hearing Examiner considered both the Environmental Rights Act and the Environmental Policy Act, wherein the Minnesota Legislature said that economic considerations alone shall not justify a material adverse effect on the environment. Minn. Stat. §§ 116B.09, subd. 2 and 116D.04, subd. 6 (1976).

After examining the issue, it is found that the Pollution Control Agency need only make a reasonable showing that it has given "due consideration" to the economic impact of the proposed rules.

In determining whether the Pollution Control Agency reasonably gave due consideration to the economic impact of the proposed rules, the Hearing Examiner applied the standard of reasonableness as set forth hereinabove at Paragraph 9 and applies the following test for "due consideration":

> To give "due consideration" to a particular factor necessarily means to give such weight or significance to it as under the circumstances it seems to merit and this involves discretion. New York Telephone Company v. Public Service Commission, 132 N.E. 2d 847, 850, 309 N.W. 569.

Examination will now be made into the question of whether or not the Agency reasonably gave "due consideration" to the economic impact of hazardous waste regulations.

32. The Pollution Control Agency contracted with Battelle Pacific Northwest Laboratories as consultant for the purpose of doing the economic analysis. The report issued by Battelle in October of 1977, is entitled, "The Impact of Hazardous Waste Generation in Minnesota". Battelle's Report is PCA Exhibit 28.

As was the case with the technical report issued by Battelle (PCA Exhibit 26), the inside cover page of PCA Exhibit 28 contains a similar "LEGAL NOTICE" as previously discussed in this Report hereinabove at Paragraph 26.

While Battelle's technical report is buttressed by other substantial technical and scientific exhibits in the record of the within considered proceedings, the Battelle economic report is the single substantial basis presented by the Agency regarding economic impacts which embodies certain surveys conducted in Minnesota in order to make economic determinations and conclusions.

While the so-called "disclaimer" contained in PCA Exhibit 28 does not invalidate the report, it is found to detract from its impact more so than was the case with Battelle's technical report because necessity for such disclaimer or exculpatory clause is not as evident for an economic report as is the case with a research and development report dealing with the scientific technologies of hazardous substances. Nevertheless, it is found that Battelle has the expertise to analyze economic

considerations and exercised that expertise in good faith.

Battelle's expert witness testified that Battelle's charter involved several distinct functions. A written survey emanating jointly from the Minnesota Pollution Control Agency and the Minnesota Association of Commerce was mailed to facilities in the metropolitan area. Battelle reviewed the results of the joint PCA/MACI survey. Battelle also conducted its own survey in the outstate area to supplement the information concerning hazardous waste generated inside the metropolitan area. Additionally, Battelle reviewed some of the work conducted previously in 1973 by Barr Engineering. [Tr. p. 403]

From the information reviewed by Battelle, extrapolations were produced concluding that the per capita annual generation of hazardous waste is at a rate of approximately .039 tons per year. [Tr. p. 404] Battelle arrived at an average testing cost of approximately $1,000 per waste and calculated an initial investment of $4.66 million to evaluate the hazardous natures of those streams currently being generated in Minnesota. [Tr. p. 413] Looking at the likely number of process modifications and/or new products which would each year generate new hazardous waste streams and require a testing program, Battelle determined that an annual basis cost will be additional $86,000 per year. [Tr. p. 413] Battelle also arrived at a $15,000 a year cost to industry for the manifest reporting system. [Tr. p. 413]

The joint PCA/MACI survey was mailed to approximately 5,568 manufacturing establishments. The survey received a response of approximately 15 percent, that is, 15 percent of the organizations receiving the survey forms returned completed forms in such a manner as they could be utilized for selecting data. That 15 percent represented approximately 21 percent of the manufacturing employment in Minnesota. Out of the 15 percent response from manufacturing firms, only 139 firms or 3 percent reported having hazardous waste. The

3 percent positive returns are represented by approximately 9 percent of manufacturing employees in Minnesota. The economic conclusions reached by Battelle were based largely upon the data developed from the joint PCA/MACI survey.

There was strenuous objection to the economic report being based, in large part, upon a response of only 139 manufacturing firms in Minnesota which reported hazardous waste streams. However, it is found that the only reasonable way in which the Pollution Control Agency could have obtained the requisite economic data was by seeking such information from industry itself. It is further found that the regulated industry cannot validly challenge the allegedly small data base as statistically insufficient for the purposes of formulating an economic impact report when the alleged insufficiencies are the responsibility of industry. It is axiomatic that it would be illogical to allow industry to complain about a small data base when it is industry itself which is largely responsible for failing to supply the required data which is particularly within their knowledge and which cannot reasonably be ascertained by the Pollution Control Agency without the assistance of industry. It should be noted that the findings concerning the statistical data base of 139 firms in the metropolitan area do not go toward findings regarding the validity of the survey questions and the manner in which the survey was conducted.

In addition to the joint PCA/MACI survey in the metropolitan area, a Battelle field survey was conducted in the outstate area. This survey encompassed on-plant interviews by Battelle employees with manufacturing facilities. Thirty-five outstate firms were contacted by Battelle.

It is evident that Battelle Northwest did not give reasonable "due consideration" to the economic impact of the proposed rules upon industry. In fact, Battelle merely viewed the economic report as a statement of projected expenses to industry

which will be incurred by reason of the regulatory package without making any judgments whatsoever as to whether the environmental benefits derived justify the resulting economic burden on industry. The following exchange is indicative of Battelle's approach when the expert witness from Battelle was being questioned by a member of the public:

"Q. In your testimony you made a choice between the listing approach and the criteria approach. . . .

"A. Yes.

"Q. And you recommended the criteria approach, is that right?

"A. That's correct.

"Q. And you based that recommendation on your opinion that the criteria approach was more equitable and was worth the extra cost over the listing approach, is that fair?

"A. Yes.

"Q. You must then have assessed the cost of the criteria approach. Are those costs contained in the Battelle Report Number 2, as we have talked about them today?

"A. Yes, they are.

"Q. So the accuracy of the costs of it are contained in Battelle 2. Go to your selection of the criteria approach over the listing approach, that is, if the costs contained in Battelle 2 are substantially in error that may have changed your choice of the criteria approach over the listing approach?

"A. No, it would not.

"Q. Regardless of what the costs were of the testing program, you would have selected a criteria approach over a listing approach?

"A. Yes, sir.

"Q. Regardless of cost?

"A. Yes, sir." [Tr. pp. 976-977]

The fact that Battelle did not give "due consideration" to the economic impact is not necessarily significant because the

statutory requirement of "due consideration" falls upon the Pollution Control Agency and not necessarily their consultants. However, it does show that Battelle did not produce the economic report with a view of assisting the Agency in its statutory obligation to give due consideration to the economics involved.

The question, then, is whether the Agency itself gave due consideration to the economics involved.

The Hearing Examiner finds that the Pollution Control Agency did not give due consideration to economic factors up to the point in time at which the public hearing process began (October 24, 1977). In making this finding, the Hearing Examiner looks not only to the actions of the Agency, but also into the Battelle economic report as that report embodies the heart of the Agency's economic considerations. The specific reasons for this finding are set forth hereinbelow:

The economic analysis completed by Battelle was not based upon the rules as originally proposed and noticed for hearing. Battelle's expert witness testified that they did not have benefit of the regulation as proposed when PCA Exhibit 28 was prepared. Rather, Battelle had been working from a preliminary draft of the rules. The draft which was finally noticed for hearing was the fifth draft. In fact, there was not adequate showing that Battelle considered the economic impacts of all the rules as noticed for hearing. For example, the rules as noticed for hearing required the testing and identification of waste that was comprised of small amounts of unrelated substances. Battelle's expert witness testified at Pages 1728-1729 that they did not consider the economic impact of that rule. There was no showing that the Agency independently considered the impacts of that rule as originally proposed.

The economic analysis by Battelle was based upon the technical criteria suggested in the recommendations contained in Battelle's technical report (PCA Exhibit 26). Yet, as testified to by Battelle, the rules as noticed for hearing

encompassed more than Battelle recommended from a technical standpoint. [Tr. pp. 969-970] Therefore, there were some provisions of the rules as noticed for hearing for which there were no economic considerations given whatsoever. (See, discussions in the record concerning HW 2.B.1. as originally proposed.)

There is a strong argument that economic investigation should have been made into transportation and related disposal costs that may be incurred by reason of the proposed rules. However, Battelle's expert witness stated:

> It is our opinion that current law covers all aspects of the disposal of hazardous waste management from a standpoint of what is an acceptable disposal methodology and what is not. In other words, no disposal option would be required through new regulations that is not in effect required now. Consequently, if all hazardous wastes are currently being managed in the way prescribed by law, there should be no shift in the costs or the practices after institution of the currently proposed regulations. . . .Therefore, we see two major costs which can be attributed to the proposed regulatory package as those associated with the testing of wastes and those associated with the manifest system of reporting. [Tr. pp. 412-413, 415]

In coming to this conclusion, Battelle's expert pointed to Federal D.O.T. regulations and Minnesota laws which pertain to the protection of surface and groundwater and air quality and specifically referenced Minn. Regs. WPC 14, 22, 23 and Minn. Reg. SW 6. Upon questioning, Battelle's expert agreed that the regulations he referenced did not contain the same specific standards as suggested in Battelle's technical report. [PCA Exhibit 26] At the bottom line, Battelle's expert felt that the legislative and administrative intent embodied in the laws he referenced is the same for all intent and purposes as that embodied in the proposed hazardous waste rules. Nevertheless, the criteria used in the proposed regulations to determine what is and is not hazardous waste is not embodied in any specific existing regulations or statutes. For example, there is no existing law defining a toxic oral LD_{50} at 500 milligrams

per kilogram. It was pointed out that even Battelle's reasoning utilized a scenario defining an oral LD_{50} from 50 to 250 and finally, 500 milligrams per kilogram. Battelle's expert agreed that as one increases restrictiveness for each of these definitions, more and more wastes would be included as hazardous waste. This indicates that a substance which might not require a specific type disposal under existing law, may require a specified disposal by reason of being classified as hazardous waste under the proposed rules. For example, the following exchange took place while Battelle's expert was being questioned:

"Q. Having stated that we would include more wastes as you increase the restrictiveness of the definition as applied, that obviously will generate more waste, will generate more hauling costs, more transportation costs, more disposal costs, will it not?

"A. Yes, it will.

"Q. But those weren't considered by you, the increases. You considered them the same?

"A. That's correct." [Tr. pp. 1643-1656]

Therefore, there was no economic analysis or consideration of disposal costs that may be incurred by reason of the proposed rules. This was based on the presumption that the proposed rules will not add additional disposal costs to industry because industry is already required to dispose of its hazardous waste. This presumption is not supported in the record.

Because the economic considerations were based in large part upon the joint PCA/MACI survey, one must consider the validity of that survey. One hundred and thirty-nine of the 857 respondents to the survey indicated that they currently generated hazardous waste. Thus, 718 or approximately 85 percent of the industries which responded to the survey indicated they had no hazardous wastes. The specific question asked

on the survey is as follows:

> Does your plant produce any of the industrial wastes included in the following waste category list? Yes ____ No ____

Following the above-quoted question was a general waste category list which did not specify the criteria for determining hazardous waste as embodied in the rules as noticed for hearing.

Battelle's expert was asked his opinion as to whether the 718 industries which responded that they had no hazardous waste would have responded otherwise had they been aware of those substances which are considered hazardous waste under the rules as noticed for hearing. The witness' response was: "Yes, that's entirely possible." [Tr. p. 1013] The following exchange then took place as a member of the public questioned the consultant from Battelle:

"Q. Is it possible, then, . . . that 85 percent that responded to the question that they did not have hazardous waste under the regulations actually do have hazardous waste, is that correct?

"A. That's correct.

"Q. Okay. It is reasonable, then, to assume that if the definitions contained in HW 2 were specified in the survey, that the results would have been different?

"A. It's reasonable to assume they could be different, yes.

"Q. Considerably different?

"A. I don't believe so, but it's possible."

Questions were also raised regarding the manner in which the joint PCA/MACI survey was conducted. Battelle's expert witness had previously been involved in a hazardous waste survey conducted in Region 10 of the United States Environmental Protection Agency. The survey conducted in Region 10 was a telephone type survey wherein Battelle directly contacted the industries. Battelle's expert was then asked the following questions:

"Q. Now, do you think that that is a better way (referring to the telephone type survey) to go about it than the survey that was done here in terms of accurateness of information?

"A. I believe so.

"Q. It also offered you a way to, perhaps, chat about the questionnaire, verify what's being said?

"A. That's correct.

"Q. Make sure that they understand what is or is not potentially a hazardous waste?

"A. Yes, sir." [Tr. p. 1171]

Battelle's expert witness testified that the conclusions reached in the economic report were compared with the results of surveys conducted in the States of Washington and Oregon, and that the independent results from the Minnesota compared favorably with results obtained in the State of Washington, which was considered by Battelle to be a state economically structured similar to Minnesota. However, on further questioning, we learned that the figures developed for the States of Washington and Oregon were developed by a different method than those developed in Minnesota. In both Washington and Oregon, all manufacturers were identified and contacted directly by telephone. Data was gathered on all industrial wastes generated by each firm and a decision was made by Battelle staff as to which of those wastes would likely meet the criteria of hazardous wastes. The survey conducted in the metropolitan area of Minnesota did not include such close contact between investigator and responding firm. Battelle's expert witness was then asked the following question:

"Q. Is it reasonable to assume that the two methods would have resulted in different figures?

"A. It's entirely possible." [Tr. p. 1015]

It was also pointed out that certain sources of hazardous waste outside of the manufacturing sectors such as power plants

and airlines were not included in Battelle's economic report due to insufficient survey returns. In questioning Battelle's expert on this point, the following took place:

"Q. You didn't include any service type organizations within your potential waste sources, did you?

"A. No, we did not.

"Q. But isn't it true that, in fact, there are some hazardous waste streams for service related organizations?

"A. Yes, service related organizations did receive the surveys. They did not respond. . . .

* * *

"Q. But we are talking, then, about some waste streams aren't included in this report?

"A. Oh, there are definitely other hazardous waste streams that are not included." [Tr. pp. 1173-1174]

Based on the above, the following facts are indicative of a finding that the Pollution Control Agency did not give "due consideration" to the economic impact of the proposed rules as noticed for hearing on the date the hearing process began:

(a) There was no showing that the Pollution Control Agency considered any possible incremental costs of disposal of hazardous waste if the rules as noticed for hearing would encompass substances not necessarily under specific disposal requirements because of existing law. Further, there was inadequate showing that existing law mandates similar disposal of all substances that would be classified as hazardous waste under the rules as noticed for hearing.

(b) Although the rules as originally noticed for hearing classified small amounts of unrelated substances as hazardous waste, there is testimony indicating there were no economic considerations given to the impact of that rule. (See, HW 2.B.4. as originally noticed for hearing) Although the rule was subsequently amended, the lack of economic consideration raises doubt about the manner in which the economics

of the proposed rules were scrutinized by the Agency.

(c) There is affirmative testimony showing that the economic report did not consider those areas wherein the rules as noticed for hearing were broader than the technical recommendations contained in PCA Exhibit 26. (E.g., see HW 2.B.1. as originally noticed for hearing)

(d) The agency's expert consultant testified that the joint PCA/MACI survey might reasonably have resulted in different baseline figures if the survey was conducted by some other method such as through personal or telephone interviews.

(e) The joint PCA/MACI survey may have produced different results if the respondents had been made aware of the criteria for determining hazardous waste in the rules as noticed for hearing.

(f) The economic survey data did not even consider or utilize any input from service industries which may have hazardous waste streams in Minnesota.

Finally, the expert witness from Battelle testified that the contract executed between the Pollution Control Agency and Battelle for its economic report did not specify a date when the report or economic study was to be completed. Rather, conversations were had outside the contract and the expert witness testified that Battelle was of the understanding that the document should be available 30 days prior to the hearings. [Tr. p. 1116] Considering the time requirements necessary to comply with applicable notice provisions before a rulemaking hearing, one must conclude that the Pollution Control Agency was not providing enough time to give due consideration to economic factors before the proposed rules were published for hearing in the State Register. (Note should be taken that Minn. Reg. HE 103 requires that the Agency file the Notice and Order for Hearing with the Office of Hearing Examiners at least 25 days prior to hearing. Obviously, the Agency resolution

authorizing a rulemaking hearing would occur sometime before the 25 day requirement. Also, see Minn. Reg. ME 103(i) and its reference to ". . .economic, scientific or other manuals or treatises to be utilized at the hearing. . ."). In fact, when the Board of the Pollution Control Agency approved hazardous waste rules for hearing, it had not yet received the final economic report from Battelle. Apparently, the Board of the Pollution Control Agency only had a draft document that did not include the assessment of testing costs or manifest costs which are the two major items of economic impact as determined by the Battelle report. [Tr. pp. 1122-1123] On December 28, 1976, the PCA Board authorized hearings on proposed hazardous waste rules. On June 28, 1977, the Board reconfirmed the resolution authorizing public hearings. On September 6, 1977, the Pollution Control Agency issued its Order and Notice of Hearing. The final Battelle report on the economic impact of hazardous waste rules is dated October, 1977. Without the final economic report, there is serious doubt as to how the Pollution Control Agency could have given "due consideration" to the economic factors involved at the time resolution was passed approving the hazardous waste rules for hearing.

33. Although the Pollution Control Agency did not give "due consideration" to the economic impact of the proposed rules up to the point in time at which the public hearing process began, it is found that the Pollution Control Agency did give "due consideration" to the economics involved prior to the close of the record of the within considered proceedings.

A review of the record and from the particular insight gained by participating in the hearing process leads one to conclude that industries' opposition, at least to a substantial degree, was bottomed on economic factors. Industry did not dwell on attempting to show a lack of necessity for hazardous waste regulations nor did industry support a scenario

In determining whether the Pollution Control Agency reasonably gave due consideration to the economic impact of the proposed rules, the Hearing Examiner applied the standard of reasonableness as set forth hereinabove at Paragraph 9 and applies the following test for "due consideration":

> To give "due consideration" to a particular factor necessarily means to give such weight or significance to it as under the circumstances it seems to merit and this involves discretion. New York Telephone Company v. Public Service Commission, 132 N.E. 2d 847, 850, 309 N.W. 569.

Examination will now be made into the question of whether or not the Agency reasonably gave "due consideration" to the economic impact of hazardous waste regulations.

32. The Pollution Control Agency contracted with Battelle Pacific Northwest Laboratories as consultant for the purpose of doing the economic analysis. The report issued by Battelle in October of 1977, is entitled, "The Impact of Hazardous Waste Generation in Minnesota". Battelle's Report is PCA Exhibit 28.

As was the case with the technical report issued by Battelle (PCA Exhibit 26), the inside cover page of PCA Exhibit 28 contains a similar "LEGAL NOTICE" as previously discussed in this Report hereinabove at Paragraph 26.

While Battelle's technical report is buttressed by other substantial technical and scientific exhibits in the record of the within considered proceedings, the Battelle economic report is the single substantial basis presented by the Agency regarding economic impacts which embodies certain surveys conducted in Minnesota in order to make economic determinations and conclusions.

While the so-called "disclaimer" contained in PCA Exhibit 28 does not invalidate the report, it is found to detract from its impact more so than was the case with Battelle's technical report because necessity for such disclaimer or exculpatory clause is not as evident for an economic report as is the case with a research and development report dealing with the scientific technologies of hazardous substances. Nevertheless, it is found that Battelle has the expertise to analyze economic

considerations and exercised that expertise in good faith.

Battelle's expert witness testified that Battelle's charter involved several distinct functions. A written survey emanating jointly from the Minnesota Pollution Control Agency and the Minnesota Association of Commerce was mailed to facilities in the metropolitan area. Battelle reviewed the results of the joint PCA/MACI survey. Battelle also conducted its own survey in the outstate area to supplement the information concerning hazardous waste generated inside the metropolitan area. Additionally, Battelle reviewed some of the work conducted previously in 1973 by Barr Engineering. [Tr. p. 403]

From the information reviewed by Battelle, extrapolations were produced concluding that the per capita annual generation of hazardous waste is at a rate of approximately .039 tons per year. [Tr. p. 404] Battelle arrived at an average testing cost of approximately $1,000 per waste and calculated an initial investment of $4.66 million to evaluate the hazardous natures of those streams currently being generated in Minnesota. [Tr. p. 413] Looking at the likely number of process modifications and/or new products which would each year generate new hazardous waste streams and require a testing program, Battelle determined that an annual basis cost will be additional $86,000 per year. [Tr. p. 413] Battelle also arrived at a $15,000 a year cost to industry for the manifest reporting system. [Tr. p. 413]

The joint PCA/MACI survey was mailed to approximately 5,568 manufacturing establishments. The survey received a response of approximately 15 percent, that is, 15 percent of the organizations receiving the survey forms returned completed forms in such a manner as they could be utilized for selecting data. That 15 percent represented approximately 21 percent of the manufacturing employment in Minnesota. Out of the 15 percent response from manufacturing firms, only 139 firms or 3 percent reported having hazardous waste. The

3 percent positive returns are represented by approximately 9 percent of manufacturing employees in Minnesota. The economic conclusions reached by Battelle were based largely upon the data developed from the joint PCA/MACI survey.

There was strenuous objection to the economic report being based, in large part, upon a response of only 139 manufacturing firms in Minnesota which reported hazardous waste streams. However, it is found that the only reasonable way in which the Pollution Control Agency could have obtained the requisite economic data was by seeking such information from industry itself. It is further found that the regulated industry cannot validly challenge the allegedly small data base as statistically insufficient for the purposes of formulating an economic impact report when the alleged insufficiencies are the responsibility of industry. It is axiomatic that it would be illogical to allow industry to complain about a small data base when it is industry itself which is largely responsible for failing to supply the required data which is particularly within their knowledge and which cannot reasonably be ascertained by the Pollution Control Agency without the assistance of industry. It should be noted that the findings concerning the statistical data base of 139 firms in the metropolitan area do not go toward findings regarding the validity of the survey questions and the manner in which the survey was conducted.

In addition to the joint PCA/MACI survey in the metropolitan area, a Battelle field survey was conducted in the outstate area. This survey encompassed on-plant interviews by Battelle employees with manufacturing facilities. Thirty-five outstate firms were contacted by Battelle.

It is evident that Battelle Northwest did not give reasonable "due consideration" to the economic impact of the proposed rules upon industry. In fact, Battelle merely viewed the economic report as a statement of projected expenses to industry

which will be incurred by reason of the regulatory package without making any judgments whatsoever as to whether the environmental benefits derived justify the resulting economic burden on industry. The following exchange is indicative of Battelle's approach when the expert witness from Battelle was being questioned by a member of the public:

"Q. In your testimony you made a choice between the listing approach and the criteria approach. . . .

"A. Yes.

"Q. And you recommended the criteria approach, is that right?

"A. That's correct.

"Q. And you based that recommendation on your opinion that the criteria approach was more equitable and was worth the extra cost over the listing approach, is that fair?

"A. Yes.

"Q. You must then have assessed the cost of the criteria approach. Are those costs contained in the Battelle Report Number 2, as we have talked about them today?

"A. Yes, they are.

"Q. So the accuracy of the costs of it are contained in Battelle 2. Go to your selection of the criteria approach over the listing approach, that is, if the costs contained in Battelle 2 are substantially in error that may have changed your choice of the criteria approach over the listing approach?

"A. No, it would not.

"Q. Regardless of what the costs were of the testing program, you would have selected a criteria approach over a listing approach?

"A. Yes, sir.

"Q. Regardless of cost?

"A. Yes, sir." [Tr. pp. 976-977]

The fact that Battelle did not give "due consideration" to the economic impact is not necessarily significant because the

statutory requirement of "due consideration" falls upon the Pollution Control Agency and not necessarily their consultants. However, it does show that Battelle did not produce the economic report with a view of assisting the Agency in its statutory obligation to give due consideration to the economics involved.

The question, then, is whether the Agency itself gave due consideration to the economics involved.

The Hearing Examiner finds that the Pollution Control Agency did not give due consideration to economic factors up to the point in time at which the public hearing process began (October 24, 1977). In making this finding, the Hearing Examiner looks not only to the actions of the Agency, but also into the Battelle economic report as that report embodies the heart of the Agency's economic considerations. The specific reasons for this finding are set forth hereinbelow:

The economic analysis completed by Battelle was not based upon the rules as originally proposed and noticed for hearing. Battelle's expert witness testified that they did not have benefit of the regulation as proposed when PCA Exhibit 28 was prepared. Rather, Battelle had been working from a preliminary draft of the rules. The draft which was finally noticed for hearing was the fifth draft. In fact, there was not adequate showing that Battelle considered the economic impacts of all the rules as noticed for hearing. For example, the rules as noticed for hearing required the testing and identification of waste that was comprised of small amounts of unrelated substances. Battelle's expert witness testified at Pages 1728-1729 that they did not consider the economic impact of that rule. There was no showing that the Agency independently considered the impacts of that rule as originally proposed.

The economic analysis by Battelle was based upon the technical criteria suggested in the recommendations contained in Battelle's technical report (PCA Exhibit 26). Yet, as testified to by Battelle, the rules as noticed for hearing

encompassed more than Battelle recommended from a technical standpoint. [Tr. pp. 969-970] Therefore, there were some provisions of the rules as noticed for hearing for which there were no economic considerations given whatsoever. (See, discussions in the record concerning HW 2.B.1. as originally proposed.)

There is a strong argument that economic investigation should have been made into transportation and related disposal costs that may be incurred by reason of the proposed rules. However, Battelle's expert witness stated:

> It is our opinion that current law covers all aspects of the disposal of hazardous waste management from a standpoint of what is an acceptable disposal methodology and what is not. In other words, no disposal option would be required through new regulations that is not in effect required now. Consequently, if all hazardous wastes are currently being managed in the way prescribed by law, there should be no shift in the costs or the practices after institution of the currently proposed regulations. . . .Therefore, we see two major costs which can be attributed to the proposed regulatory package as those associated with the testing of wastes and those associated with the manifest system of reporting. [Tr. pp. 412-413, 415]

In coming to this conclusion, Battelle's expert pointed to Federal D.O.T. regulations and Minnesota laws which pertain to the protection of surface and groundwater and air quality and specifically referenced Minn. Regs. WPC 14, 22, 23 and Minn. Reg. SW 6. Upon questioning, Battelle's expert agreed that the regulations he referenced did not contain the same specific standards as suggested in Battelle's technical report. [PCA Exhibit 26] At the bottom line, Battelle's expert felt that the legislative and administrative intent embodied in the laws he referenced is the same for all intent and purposes as that embodied in the proposed hazardous waste rules. Nevertheless, the criteria used in the proposed regulations to determine what is and is not hazardous waste is not embodied in any specific existing regulations or statutes. For example, there is no existing law defining a toxic oral LD_{50} at 500 milligrams

per kilogram. It was pointed out that even Battelle's reasoning utilized a scenario defining an oral LD_{50} from 50 to 250 and finally, 500 milligrams per kilogram. Battelle's expert agreed that as one increases restrictiveness for each of these definitions, more and more wastes would be included as hazardous waste. This indicates that a substance which might not require a specific type disposal under existing law, may require a specified disposal by reason of being classified as hazardous waste under the proposed rules. For example, the following exchange took place while Battelle's expert was being questioned:

"Q. Having stated that we would include more wastes as you increase the restrictiveness of the definition as applied, that obviously will generate more waste, will generate more hauling costs, more transportation costs, more disposal costs, will it not?

"A. Yes, it will.

"Q. But those weren't considered by you, the increases. You considered them the same?

"A. That's correct." [Tr. pp. 1643-1656]

Therefore, there was no economic analysis or consideration of disposal costs that may be incurred by reason of the proposed rules. This was based on the presumption that the proposed rules will not add additional disposal costs to industry because industry is already required to dispose of its hazardous waste. This presumption is not supported in the record.

Because the economic considerations were based in large part upon the joint PCA/MACI survey, one must consider the validity of that survey. One hundred and thirty-nine of the 857 respondents to the survey indicated that they currently generated hazardous waste. Thus, 718 or approximately 85 percent of the industries which responded to the survey indicated they had no hazardous wastes. The specific question asked

on the survey is as follows:

> Does your plant produce any of the industrial wastes included in the following waste category list? Yes ____ No ____

Following the above-quoted question was a general waste category list which did not specify the criteria for determining hazardous waste as embodied in the rules as noticed for hearing.

Battelle's expert was asked his opinion as to whether the 718 industries which responded that they had no hazardous waste would have responded otherwise had they been aware of those substances which are considered hazardous waste under the rules as noticed for hearing. The witness' response was: "Yes, that's entirely possible." [Tr. p. 1013] The following exchange then took place as a member of the public questioned the consultant from Battelle:

"Q. Is it possible, then, . . . that 85 percent that responded to the question that they did not have hazardous waste under the regulations actually do have hazardous waste, is that correct?

"A. That's correct.

"Q. Okay. It is reasonable, then, to assume that if the definitions contained in HW 2 were specified in the survey, that the results would have been different?

"A. It's reasonable to assume they could be different, yes.

"Q. Considerably different?

"A. I don't believe so, but it's possible."

Questions were also raised regarding the manner in which the joint PCA/MACI survey was conducted. Battelle's expert witness had previously been involved in a hazardous waste survey conducted in Region 10 of the United States Environmental Protection Agency. The survey conducted in Region 10 was a telephone type survey wherein Battelle directly contacted the industries. Battelle's expert was then asked the following questions:

"Q. Now, do you think that that is a better way (referring to the telephone type survey) to go about it than the survey that was done here in terms of accurateness of information?

"A. I believe so.

"Q. It also offered you a way to, perhaps, chat about the questionnaire, verify what's being said?

"A. That's correct.

"Q. Make sure that they understand what is or is not potentially a hazardous waste?

"A. Yes, sir." [Tr. p. 1171]

Battelle's expert witness testified that the conclusions reached in the economic report were compared with the results of surveys conducted in the States of Washington and Oregon, and that the independent results from the Minnesota compared favorably with results obtained in the State of Washington, which was considered by Battelle to be a state economically structured similar to Minnesota. However, on further questioning, we learned that the figures developed for the States of Washington and Oregon were developed by a different method than those developed in Minnesota. In both Washington and Oregon, all manufacturers were identified and contacted directly by telephone. Data was gathered on all industrial wastes generated by each firm and a decision was made by Battelle staff as to which of those wastes would likely meet the criteria of hazardous wastes. The survey conducted in the metropolitan area of Minnesota did not include such close contact between investigator and responding firm. Battelle's expert witness was then asked the following question:

"Q. Is it reasonable to assume that the two methods would have resulted in different figures?

"A. It's entirely possible." [Tr. p. 1015]

It was also pointed out that certain sources of hazardous waste outside of the manufacturing sectors such as power plants

and airlines were not included in Battelle's economic report due to insufficient survey returns. In questioning Battelle's expert on this point, the following took place:

"Q. You didn't include any service type organizations within your potential waste sources, did you?

"A. No, we did not.

"Q. But isn't it true that, in fact, there are some hazardous waste streams for service related organizations?

"A. Yes, service related organizations did receive the surveys. They did not respond. . . .

* * *

"Q. But we are talking, then, about some waste streams aren't included in this report?

"A. Oh, there are definitely other hazardous waste streams that are not included." [Tr. pp. 1173-1174]

Based on the above, the following facts are indicative of a finding that the Pollution Control Agency did not give "due consideration" to the economic impact of the proposed rules as noticed for hearing on the date the hearing process began:

(a) There was no showing that the Pollution Control Agency considered any possible incremental costs of disposal of hazardous waste if the rules as noticed for hearing would encompass substances not necessarily under specific disposal requirements because of existing law. Further, there was inadequate showing that existing law mandates similar disposal of all substances that would be classified as hazardous waste under the rules as noticed for hearing.

(b) Although the rules as originally noticed for hearing classified small amounts of unrelated substances as hazardous waste, there is testimony indicating there were no economic considerations given to the impact of that rule. (See, HW 2.B.4. as originally noticed for hearing) Although the rule was subsequently amended, the lack of economic consideration raises doubt about the manner in which the economics

of the proposed rules were scrutinized by the Agency.

(c) There is affirmative testimony showing that the economic report did not consider those areas wherein the rules as noticed for hearing were broader than the technical recommendations contained in PCA Exhibit 26. (E.g., see HW 2.B.1. as originally noticed for hearing)

(d) The agency's expert consultant testified that the joint PCA/MACI survey might reasonably have resulted in different baseline figures if the survey was conducted by some other method such as through personal or telephone interviews.

(e) The joint PCA/MACI survey may have produced different results if the respondents had been made aware of the criteria for determining hazardous waste in the rules as noticed for hearing.

(f) The economic survey data did not even consider or utilize any input from service industries which may have hazardous waste streams in Minnesota.

Finally, the expert witness from Battelle testified that the contract executed between the Pollution Control Agency and Battelle for its economic report did not specify a date when the report or economic study was to be completed. Rather, conversations were had outside the contract and the expert witness testified that Battelle was of the understanding that the document should be available 30 days prior to the hearings. [Tr. p. 1116] Considering the time requirements necessary to comply with applicable notice provisions before a rulemaking hearing, one must conclude that the Pollution Control Agency was not providing enough time to give due consideration to economic factors before the proposed rules were published for hearing in the State Register. (Note should be taken that Minn. Reg. HE 103 requires that the Agency file the Notice and Order for Hearing with the Office of Hearing Examiners at least 25 days prior to hearing. Obviously, the Agency resolution

authorizing a rulemaking hearing would occur sometime before the 25 day requirement. Also, see Minn. Reg. HE 103(i) and its reference to ". . .economic, scientific or other manuals or treatises to be utilized at the hearing. . ."). In fact, when the Board of the Pollution Control Agency approved hazardous waste rules for hearing, it had not yet received the final economic report from Battelle. Apparently, the Board of the Pollution Control Agency only had a draft document that did not include the assessment of testing costs or manifest costs which are the two major items of economic impact as determined by the Battelle report. [Tr. pp. 1122-1123] On December 28, 1976, the PCA Board authorized hearings on proposed hazardous waste rules. On June 28, 1977, the Board reconfirmed the resolution authorizing public hearings. On September 6, 1977, the Pollution Control Agency issued its Order and Notice of Hearing. The final Battelle report on the economic impact of hazardous waste rules is dated October, 1977. Without the final economic report, there is serious doubt as to how the Pollution Control Agency could have given "due consideration" to the economic factors involved at the time resolution was passed approving the hazardous waste rules for hearing.

33. Although the Pollution Control Agency did not give "due consideration" to the economic impact of the proposed rules up to the point in time at which the public hearing process began, it is found that the Pollution Control Agency did give "due consideration" to the economics involved prior to the close of the record of the within considered proceedings.

A review of the record and from the particular insight gained by participating in the hearing process leads one to conclude that industries' opposition, at least to a substantial degree, was bottomed on economic factors. Industry did not dwell on attempting to show a lack of necessity for hazardous waste regulations nor did industry support a scenario

denying the inherent dangers of hazardous waste. Rather, the strenuous objections of industry focused on factors which industry viewed as resulting in economic impacts unacceptable from a financial point of view.

Motiviated by the above stated factors, the industries which participated in the hearing process entered into negotiations with the Staff of the Minnesota Pollution Control Agency. During a relatively long recess between hearing dates, representatives of the participating industries obtained substantial concessions from PCA Staff resulting in amendments to the rules as originally noticed for hearing. See, for example, PCA Exhibits 37, 41, 42, 43, 44, 45, 47, 50 and 61. (Note should be taken that the substantial concessions referred to by the Hearing Examiner do not necessarily result in substantial rule changes as envisioned in the criteria set forth at Minn. Regs. HE 107 and 108. That determination lies within the province to the Chief Hearing Examiner.)

The amendments supported by PCA Staff were made after participating industry had made its strongest attacks against the economics associated with the rules as noticed for hearing. Therefore, PCA Staff was fully cognizant of the position taken by participating industry and it should not be denied that one of the principal motivating factors which prompted the participating industries' challenges, were economic factors. With this background in mind, it is found that the concessions made by the PCA Staff are largely bottomed on economic considerations which do have the effect of reducing the economic impact of the hazardous waste rules as finally supported and proposed by PCA Staff.

It is not necessary to determine the exact dollar amount reduction that the finally proposed rules will have upon industry as compared to the rules as originally noticed for hearing. In fact, it is found that "due consideration" in this matter does not necessitate a determination of exact dollar

amounts. It is reiterated that one of the factors which inhibited the Agency from giving the requisite due consideration to the economic impact of the proposed rules is that industry possessed much of the relevant raw data necessary to make economic determinations and did not openly, freely and substantially supply that data to the Pollution Control Agency.

It is found that if one were to generalize as to the effect of the amendments proposed by PCA Staff, it would be reasonable to conclude that one of the most substantial effects is to induce a reduction of the economic impact upon regulated industry. That being the case, it is found that the Pollution Control Agency did give "due consideration" to the economic factors involved before the close of the record of the within considered proceedings.

Indicative of the above finding is the tenor of the post-hearing written submissions submitted to the record by regulated industry. There is a vast and noticeable difference between the position taken by most participating industries before and after the final amendments supported by PCA Staff. Such difference in attitude can only be reasonably attributed to industries' satisfaction with the rule changes finally supported by Staff.

As was the case with regard to the findings herein concerning the appropriateness of the technical criteria embodied in the proposed rules, the findings pertaining to economic reasonableness only apply to the hazardous waste rules as finally supported by PCA Staff and only to the degree in which rules as finally adopted are consistent with the findings herein.

34. Another issue which should be addressed is whether a federal hazardous waste program would displace the need for a state program. At this time, the United States Government is putting together a hazardous waste program through the auspices of the United States Environmental Protection Agency. Federal

government representatives testified that the Resource Conservation and Recovery Act clearly contemplates that the National Hazardous Waste management program will be carried out through the development of state programs in lieu of the federal government. The United States Environmental Protection Agency stated that: State regulations should control hazardous waste from the point of generation through transportation, to storage, treatment or disposal.

Although the federal government will eventually promulgate hazardous waste rules, it is not anticipated that such federal regulation will preempt state regulation. It is expected, as is the case with other environmental disciplines, individual states may adopt standards more stringent than federal standards. Once a federal program is implemented, individual state programs will be examined to determine whether they are equivalent to the federal program and consistent with other state programs. Although a federal program has not yet been implemented and although many states do not yet have individual hazardous waste programs, there is no substantial showing in the record that Minnesota's hazardous waste rules will not meet the consistency and equivalency tests.

35. While there is no issue as to whether the Resource Conservation and Recovery Act preempts a state from adopting hazardous waste rules as discussed in Paragraph 34 above, issue was raised as to whether the Agency has authority to regulate the transportation of hazardous waste. The argument raised during the within considered proceedings is that Congress by passage of the Hazardous Materials Transportation Act (49 U.S.C.A. § 1801 et seq.) has preempted state regulation of the transportation of hazardous waste. Preemption is a constitutional argument based on the Supremacy Clause of the United States Constitution. In arguing this issue, PCA Staff asserts that the burden is on the challenger to establish unconstitutionality and that that burden is an extreme burden to overcome. The PCA Staff asserts that

legislative action and administrative action are presumed to be constitutionally valid and cites as authority Federal Distillers, Inc. v. State of Minnesota, 229 N.W.2d 144 (Minn. 1975) and Head v. Special School District No. 1, 182 N.W.2d 887 (Minn. 1970).

However, it is found that the asserted presumption in favor of constitutionality of administrative action is not applicable to the matter at hand. The principles of constitutional law cited by PCA Staff apply to existing law embodied in either statute or administrative rule. That is not the situation here. The hazardous waste rules are merely being proposed and, therefore, have not attained any presumption of constitutionality. In fact, it would be most advisable to examine the issues of constitutionality during the inception period and before final action is taken which escalates a proposed rule to a position of having force and effect of law by its adoption.

The federal Hazardous Materials Transportation Act specifically empowers the Secretary to "issue. . .regulations for the safe transportation in commerce of hazardous materials" which "may govern any safety aspect of the transportation of hazardous materials which the Secretary may deem necessary or appropriate". (49 U.S.C. § 1804(a)) The Act further authorizes the Secretary "to establish criteria for handling hazardous materials". (49 U.S.C. § 1805(a)) Finally, the Act contains specific requirements at 49 U.S.C. § 1811, which reads, in pertinent part, as follows:

> (a) Except as provided in subsection (b) of this section, any requirement, of a State or political subdivision thereof, which is inconsistent with any requirement set forth in this chapter, or in a regulation issued under this chapter, is preempted. (Emphasis added)
>
> (b) Any requirement, of a State or political subdivision thereof, which is not consistent with any requirement set forth in this chapter, or in a regulation issued under this chapter, is not preempted if, upon the application of an appropriate State agency, the Secretary determines, in accordance with procedures to be prescribed by regulation, that such requirement

> (1) affords an equal or greater level of protection to the public than is afforded by the requirements of this chapter or of regulations issued under this chapter and (2) does not unreasonably burden commerce. Such requirement shall not be preempted to the extent specified in such determination by the Secretary for so long as such state or political subdivision thereof continues to administer and enforce effectively such requirement.

Thus, the Hazardous Materials Transportation Act provides that any requirement of a state, or political subdivision thereof, which is inconsistent with any requirement set forth therein, or in a regulation issued thereunder, is preempted unless, upon application of the appropriate state agency, the Secretary of Transportation determines that such requirement affords an equal or greater level of protection to the public and does not unreasonably burden interstate commerce. The Materials Transportation Bureau has established procedures whereby a preemption determination in accordance with the Hazardous Materials Act may be obtained, 41 Fed. Reg. 38167-38183 (September 9, 1976) which became effective on January 3, 1977. No such preemption determination has been requested or made with regard to the Pollution Control Agency's proposed rules.

A question, then, to be considered is whether the rules proposed by PCA Staff are consistent with any regulations of the United States Department of Transportation promulgated under the Hazardous Materials Transportation Act.

First, one must establish what inconsistency is. In Florida Avocado Growers v. Paul, 373 U.S. 132 (1963), in which a California statute prohibiting the transportation or sale of avocados with less than eight percent oil was upheld when an order of the Secretary of Agriculture based its maturity requirements on entirely different grounds, the Court said:

> The test of whether both Federal and State regulations may operate, or the State regulation must give way, is whether both regulations can be enforced without impairing the Federal superintendence of the field, not whether they are aimed at similar or different objectives.

This leads one to question whether any of the proposed rules impair the federal program. In those areas where a substance is regulated by the United States Department of Transportation as a hazardous material and is also a hazardous waste under Minnesota's proposed regulations, there would be state requirements for loading and shipping such substances which may or may not be commonsense type requirements and which may or may not necessarily impair the federal program.

If a hazardous waste under the proposed Minnesota rules were not a DOT hazardous material, there may or may not be an inconsistency because DOT does not regulate it. In fact, were it not for the questions of impairment and inconsistency, this may be a major reason why the Pollution Control Agency cannot wholly rely on DOT to regulate transportation of hazardous wastes. [Tr. p. 488] It should be noted that during the hearing, it was learned that kepone, which Mr. Cross, Burlington Northern's expert, called a poison, [Tr. p. 2631] may not even be regulated by DOT.

The proposed rules place additional requirements on transporters and others that DOT does not; shipping papers is the best example. Burlington Northern's witnesses (Graziano, Cross, and Metry) testified on numerous occasions that the proposed rules were inconsistent with DOT regulations. However, Mr. Cross admitted, after questioning by PCA Staff, that transporters could comply with both state and federal law:

"Q. . . .[I]s it possible for the transporters to comply with the DOT regulations and the PCA regulations as proposed?

"A. Yes, they can comply with both, but then it's an economic hardship involved in it." [Tr. p. 2640]

Thus, there may or may not be inconsistencies in the proposed rules which impair the federal program. However, such determinations may require decision on a case-by-case basis.

It may have been preferable if the Pollution Control Agency had applied to the United States Secretary of Transportation

to determine whether the requirements of the proposed rules afford an equal or greater level of protection to the public and whether the proposed rules unreasonably burden interstate commerce. Since that procedure was not undertaken by the Agency, the issue remains as to whether the proposed rules impair or are inconsistent with regulations of the United States Department of Transportation. If the proposed rules impair or are inconsistent, then they are subject to federal preemption.

The Hearing Examiner finds that there is a substantial issue as to whether or not the proposed rules are subject to a valid attack under the provisions of the federal Hazardous Materials Transportation Act. Nevertheless, deciding this issue at this time can be avoided without gutting an important portion of the proposed rules by the addition of language which will be discussed later hereinbelow.

The central issue of constitutionality is whether the provisions of the proposed rules relating to transportation of hazardous waste violate Art. I, § 8, cl. 3 of the United States Constitution, commonly known as the Commerce Clause. Courts have interpreted the Commerce Clause to have both an affirmative aspect--to support some exertion of federal control--and negative implications--to strike down or restrict state legislation. Hackensack Meadowlands Development Commission v. Municipal Sanitary Landfill Authority, 68 N.J. 454 (1975). We are concerned here only with the negative side of the Commerce Clause. The Hackensack court distinguished the two:

> The Supreme Court has understandably adopted a very sweeping concept of the Commerce Clause in its affirmative application, in order to further the extent of Congressional control. A much more confined notion of the reach of this provision has, however, been manifested, as we shall see, when it has been envoked to prohibit or limit state action.

Unquestionably, the proposed rules will have an impact upon interstate commerce. ". . .[A]lthough most exercises of

the police power affect interstate commerce to some degree, not every such exercise is invalid under the commerce clause." Pike v. Bruce Church Inc., 397 U.S. at 145. The burdens imposed on transporters must be weighed against the interests of the state for preservation of public health and the environment. The Hackensack court said:

> When balanced against the dangers to public health and to the environment that this legislation seeks to avert, those relatively small costs and modest inconveniences seem minor indeed.
>
> Other state and federal courts in very recent years have not hesitated to sustain legislation having as its aim the protection of health and the maintenance of environmental values and natural resources against attacks upon alleged violations of the Commerce Clause.

As can be seen from the above, the Commerce Clause is not pervasive. Yet, having declined to apply for an appropriate exemption from the United States Secretary of Transportation, the very specific expressed language of the Hazardous Materials Transportation Act must be regarded with caution lest the proposed rules be adopted and later nullified by judicial action taken under the federal statute.

36. As evidenced in the findings of Paragraph 35 hereinabove, the Hearing Examiner finds that there is a substantial issue as to whether the proposed rules are consistent or inconsistent with the federal Hazardous Materials Transportation Act and regulations adopted thereunder. However, it is found that the problem can be resolved by adding additional language to proposed HW 1.G. The underlined portion of the sentence set forth below indicates the proposed amendatory language suggested by the Hearing Examiner:

> Nothing in these regulations shall be construed to require any person to perform any act which impairs Federal superintendence of the field or is inconsistent with, prohibited by or to refrain from performing any act required by the United States Code or any duly adopted and valid regulation hereunder.

Addition re: preempt.

The suggested amendatory language will remove any doubt as to whether the proposed rules are consistent with federal regulation so as to avoid preemption. Thus, if an act were performed which would judicially be interpreted as impairing Federal superintendence of the field or which would be adjudicated inconsistent with federal law, then the act or action would be found invalid leaving the state rules in tact merely to be interpreted in accordance with judicial decision that would not invalidate its thrust with a preemption finding.

37. The PCA Staff concluded its argument on the issue of preemption by asserting that hazardous waste is not even a commodity that is entitled to protection under the Commerce Clause. The argument was that the Commerce Clause applies only to commodities and objects that are harmful to the public are beyond the purview of the Commerce Clause. Included among authorities cited for that position is Hardage v. Atkins, No. CIV-76-0945-E (D. Okla. May 27, 1977), wherein the court stated:

> Generally, objects which are harmful to the public health are not commodities and do not fall within the purview of the Commerce Clause.

Id., Slip Opinion at 3. The Hardage court then used this reasoning to uphold a state statute which regulated the shipping of industrial wastes into the State of Oklahoma. (This case is now on appeal to the Court of Appeals.) Hardage v. Atkins, appeal docketed, No. 77-1613 (10th Cir.).

However, the Hearing Examiner finds that the Hardage case is not controlling in Minnesota, nor can he guess as to the eventual outcome on appeal. However, the Hardage case may be distinguishable in that the statute in question in the Hardage decision does not place a direct burden on the transportation industry to perform positive or overt acts as is the case with the proposed rules wherein both the generator delivering hazardous waste to a transporter has certain obligations as does the transporter. (E.g., HW 5.B. and HW 5.C.)

Finally, the Hearing Examiner is reticent to adopt the logic of the Hardage case. If objects which are harmful to public health are not commodities under the Commerce Clause, it would seem that the Hazardous Materials Transportation Act is itself unconstitutional because it purports to regulate the transportation of hazardous materials and wastes and provides for preemption all under the Commerce Clause. If hazardous materials, which are obviously harmful to the public health, are not commodities then the federal Act is null and void. The Hearing Examiner does not have authority to vitiate federal law.

38. The next issue examined in this Report is "waste evaluation" as required by the proposed rules. It is crucial that all persons generating hazardous wastes manage them in a manner that will protect persons and the environment from their hazards. However, if a generator does not even know he is producing a hazardous waste, he may not manage his hazardous waste in an appropriate manner. Therefore, it is imperative that wastes be evaluated to determine whether they are hazardous. The generator is the person who is in the best position to perform this evaluation. However, there may be instances where a "facility operator" is in doubt as to whether he can accept a shipment of hazardous waste under the provisions of his particular permit. In those instances where it would be unreasonable to require the facility operator to test the waste, provisions should be made for him to be able to rely on the reasonable representations of the generator. This should be done to avoid any necessity of double testing. Thus, appropriate amendment should be made to HW 4.C.2.b.

It is not enough just to know whether a waste is a hazardous waste. The hazards posed by flammable and toxic wastes are, for example, very different. Therefore, a waste needs to be evaluated for each potentially hazardous property. The provisions of HW 2.D. and E. of the rules specify how a waste

is to be evaluated to determine whether it is a hazardous waste. These provisions are reasonable requirements for evaluating a waste. They do not require expensive carcinogenic and bioconcentrative tests. They relieve a waste producer from evaluating a waste against all of the criteria for a particular hazardous property once he has determined that a waste is hazardous under one of the criteria. The rules do not require needless tests, but allow the use of literature, data and experience in the evaluation of a waste. They allow the use of a less expensive method of testing for lethal doses and concentrations. They allow the use of only a single evaluation for similar wastes.

The proposed rules also establish a reasonable procedure by which the Agency may determine whether a waste is hazardous when such Agency determination becomes necessary.

39. The thrust and intent of the proposed rules is reasonably carried forth in the responsibilities they place on a generator for determining the nature of his waste, making appropriate disclosures to the Agency and manage the waste in an appropriate fashion while possessing adequate financial resources to pay for its proper disposal.

40. The proper labelling of hazardous waste is necessary to protect the public. The proposed rules reasonably and adequately deal with labelling requirements.

41. The final resting place of hazardous waste must be subject to regulation to ensure the requisite degree of protection for our environment. The proposed rules reasonably and necessarily regulate hazardous waste facilities. In accordance with its reasonable program, the Agency's proposed rules appropriately provide for a permit program which is reasonable and necessary to ensure proper handling and disposal of hazardous wastes.

42. The scheme of the proposed hazardous waste rules in treating separately the metropolitan and outstate area are found to be reasonable and necessary. The vast majority of

hazardous waste produced in Minnesota comes from the metropolitan area. Accordingly, reasonable provision is made for mandatory compliance in the metropolitan area leaving the outstate counties discretion to adopt a similar program or not.

43. The requirements of the proposed hazardous waste rules are reasonable in requiring immediate clean up and notification of the incident to the Pollution Control Agency.

44. Findings concerning the impact of the Hazardous Materials Transportation Act, 49 U.S.C.A. § 1801 et seq., and the Resource Conservation and Recovery Act, 42 U.S.C.A. § 6801 et seq., are stated elsewhere hereinabove. Those issues having been decided and findings made that the Resource Conservation and Recovery Act does not preempt state action, while the Hazardous Materials Transportation Act might preempt proposed regulations pertaining to the transportation of hazardous waste if the language suggested by the Hearing Examiner is not adopted; it is finally found that the Minnesota Pollution Control Agency has demonstrated and does have statutory authority to adopt the proposed hazardous waste rules as finally supported by PCA Staff and as is consistent with the Findings of this Report.

Lastly, attention is again called to the fact that the Findings contained herein conclude with recommended adoption of the rules as finally supported by PCA Staff with the changes recommended by the Examiner. The Report does not examine in depth the rules as originally noticed for public hearing. Had the Hearing Examiner only examined the rules as originally noticed for hearing, the Findings, Conclusions and Recommendations would be otherwise.

45. Since the proposed hazardous waste rules cover a new area of administrative regulation and because of the voluminous record resulting from the public hearing process, this Report did not detail the intricacies of each rule and its numerous subparts. Nevertheless, all aspects of the rules as finally proposed and the hearing record have been considered before

finalizing this Report.

46. Finally, the Board of the Pollution Control Agency should be cognizant of a letter dated and received by the Office of Hearing Examiners on March 9, 1978, and accompanying report from the Minnesota Department of Health. On its face, the letter seems to challenge the use of "land-farming" to biologically degrade oily wastes. The Department of Health raises the issue of potential carcinogens in PAH compounds as relates to oily wastes.

The record of the within considered proceedings closed March 9, 1978. The twelfth hour submission by the Minnesota Department of Health detracts from the record developed in the within considered rulemaking process. The concerns expressed by the Minnesota Department of Health would better have been presented if raised during the course of public hearings to allow the vitally concerned public, impacted industry and other state agencies to appropriately consider the concerns raised by the Department of Health.

Because the Department of Health's submission came at a time which precluded examination during the public hearing process or even further consideration by other parties during the post-hearing interim before the close of the record, the Examiner cannot adequately assess the Department's submission. However, because of the obvious concern of all citizens to reduce the hazard of cancer-causing agents, the Examiner urges the Board of the Pollution Control Agency to utilize the expertise of its staff in interpreting the Department of Health's submission before final action is taken.

47. Lastly, the changes proposed for existing solid waste rules SW 1, 2, 3, 4, 6 and 7 will prevent confusion between the two sets of regulations. The proposed changes to these rules are found to be reasonable and necessary.

CONCLUSIONS

A. That the Minnesota Pollution Control Agency and the Hearing Examiner duly acquired and now have jurisdiction over

the within considered proceedings.

B. That all relevant, legal and procedural requirements of statute and regulation have been properly complied with for the purpose of proceeding to public hearing and issuing the within Report.

C. That in selecting those wastes which are to be classified as "hazardous waste" under the proposed rules and in selecting the criteria for determining whether or not a waste is hazardous, the Pollution Control Agency acted reasonably and exercised its statutory mandate to proposed hazardous waste rules while utilizing reasonable policy decisions in selecting the technical basis for classifications and criteria.

D. The Pollution Control Agency allowed for adequate safety factors in selecting its technical criteria so as to ensure protection from non-lethal effects of hazardous waste.

E. Reasonable "variance" procedures are provided for to allow industries the requisite exemptions that may be necessitated under specific circumstances. For example, a large medical research institution or hospital may perceive certain portions of the proposed rules pertaining to small substances of unrelated materials to create unwarranted burdens. If such were the case, reasonable variance procedures can supply appropriate relief.

F. In the main, the industries which actively participated throughout the hearing process negotiated with PCA Staff and gained concessions which prompted those participating industries to refrain from challenging the rules as finally proposed during the post-hearing process.

RECOMMENDATIONS

IT IS HEREBY RESPECTFULLY RECOMMENDED: That the Board of the Minnesota Pollution Control Agency adopt the proposed hazardous waste rules as finally supported and proposed by PCA Staff with the changes indicated in the Findings of Fact hereinabove.

Dated: May 15, 1978.

WILLIAM SELTZER
Hearing Examiner

Room 83, State Office Building, Saint Paul, Minnesota, on October 25, 1977, commencing at 9:30 a.m., Board Room of the MPCA on October 26, 1977, commencing at 9:30 a.m.; Board Room of the MPCA on October 27, 1977, commencing at 9:30 a.m.; Board Room of the MPCA on October 28, 1977, commencing at 10:00 a.m.; Central Lecture Hall, Duluth Area Vocational Technical Institute, Duluth, Minnesota, on October 31, 1977, commencing at 9:30 a.m.; Lecture Hall of the Science and Health Building, Fergus Falls Community College, Fergus Falls, Minnesota, on November 2, 1977, commencing at 10:00 a.m.; Auditorium of the Rochester Public Library, Rochester, Minnesota, on November 4, 1977, commencing at 9:30 a.m.; Board Room of the MPCA on November 28, 1977, commencing at 10:00 a.m.; Board Room of the MPCA on November 30, 1977, commencing at 9:30 a.m.; Board Room of the MPCA on December 5, 1977, commencing at 10:00 a.m.; Room 311 Centennial Office Building, Saint Paul, Minnesota, on December 6, 1977, commencing at 10:00 a.m.; Board Room of the MPCA on December 7, 1977, commencing at 9:30 a.m.; Room 311, Centennial Office Building, Saint Paul, Minnesota, on December 8, 1977, commencing at 10:00 a.m.; Board Room of the MPCA on December 9, 1977, commencing at 10:00 a.m.; Board Room of the MPCA on December 12, 1977, commencing at 9:30 a.m.; Board Room of the MPCA on December 13, 1977, commencing at 10:00 a.m.; Board Room of the MPCA on December 14, 1977, commencing at 9:00 a.m.; Board Room of the MPCA on December 15, 1977, commencing at 9:15 a.m.; Board Room of the MPCA on December 16, 1977, commencing at 9:30 a.m.; Board Room of the MPCA on January 16, 1978, commencing at 9:30 a.m.; Board Room of the MPCA on February 1, 1978, commencing at 9:30 a.m.; Board Room of the MPCA on February 2, 1978, commencing at 8:45 a.m.; Board Room of the MPCA on February 3, 1978, commencing at 9:30 a.m.; Board Room of the MPCA on February 7, 1978, commencing at 1:00 p.m.; Basement Conference Room of the MPCA on February 8, 1978,

commencing at 11:00 a.m.; Basement Conference Room of the MPCA on February 9, 1978, commencing at 9:30 a.m.; Board Room of the MPCA on February 10, 1978, commencing at 9:45 a.m.; and Board Room of the MPCA on February 17, 1978, commencing at 9:45 a.m.

Appendix A

AMERICAN NATIONAL STANDARD ANSI/ASTM D 3243 - 76

Standard Test Method for FLASH POINT OF AVIATION TURBINE FUELS BY SETAFLASH CLOSED TESTER[1]

This Standard is issued under the fixed designation D 3243; the number immediately following the designation indicates the year of original adoption or, in the case of revision, the year of last revision. A number in parentheses indicates the year of last reapproval.

1. Scope

1.1 This method describes a procedure for the determination of the flash point, by a Setaflash Tester, of aviation turbine fuels. The procedure may be used to determine whether a fuel will or will not flash at a specified temperature (go-no-go flash) or the actual flash point temperature.

1.2 Results by using the Setaflash Tester have been shown to be comparable in magnitude to those obtained by using the Tag Closed-Cup procedure as described in Method D 56.

1.3 *This standard should be used solely to measure and describe the properties of materials, products, or systems in response to heat and flame under controlled laboratory conditions and should not be considered or used for the description, appraisal, or regulation of the fire hazard of materials, products, or systems under actual fire conditions.*

2. Applicable Documents

2.1 *ASTM Standards:*

D 56 Test for Flash Point by Tag Closed Tester[2]

E 1 Specification for ASTM Thermometers[3]

3. Summary of Method

3.1 By means of a syringe, 2 ml of sample is introduced through a leakproof entry port into the tightly closed Setaflash Tester that has been brought to within about 5°F (3°C) below the expected flashpoint. After 1 min, to allow the sample to come to the same temperature as the aluminum alloy body of the tester, in which the thermometer is inserted, the temperature of the apparatus is raised to the "expected" flash point temperature. A test flame is applied inside the cup and note is taken as to whether the test sample flashes or not.

3.2 As a go-no-go test, the "expected" flash point temperature is a specification or other operating target value. For a finite flash measurement, the temperature is moved through the anticipated temperature range, the test flame being applied at 2°F (1.0°C) intervals until a flash is observed; a second trial is made using the first value as the "expected" flash point temperature, this time making tests at 1°F (0.5°C) intervals.

4. Apparatus

4.1 *Flash cup and operating mechanism*, illustrated in Fig. 1 and dimensioned in detail in Annex A1. Fasten electrical heaters to the cup in such a way so as to provide for efficient transfer of heat. Provide a variable heater control device with a scaled dial and a visible signal indicating when energy is or is not being applied. Energy may be supplied from a 115 or 230-V a-c main service (for stationary use) or by a 12-V d-c battery service (for field use).

4.2 *Test Flame and Pilot Flame*—Regulatable test flame, for dipping into the test cup to try for flash, and a pilot flame to maintain the test flame, are required. These flames may be fueled by piped gas service (fixed location) or by a self-contained tank (4.2.1) of LP gas lighter fluid (for portability). Provide a gage ring, 1/8 in. (4 mm) in diameter, mounted on a post near the test flame against which the size of the flame may be judged.

4.2.1 Never recharge the gas tank with the pilot or test flames alight, nor in the vicinity of other naked flames.

---

[1] This method is under the jurisdiction of ASTM Committee D-2 on Petroleum Products and Lubricants.

Current edition approved Aug. 27, 1976. Published November 1976. Originally published as D 3243 - 73 T. Last previous edition D 3243 - 73 T.

[2] *Annual Book of ASTM Standards*, Part 23.

[3] *Annual Book of ASTM Standards*, Parts 25 and 44.

for a flash at the cup opening.

7.3.5 The sample is deemed to have flashed only if a comparatively large blue flame appears and propagates itself over the surface of the sample. Occasionally, particularly near the temperature of the actual flash point, the application of the test flame will cause a halo, which should be ignored.

7.3.6 Record the test result as flash (or no flash) at the temperature and the barometric pressure. Make a barometric pressure correction, if necessary (9.1).

7.4 *Test Procedure for Actual Flash Point:*

7.4.1 When a finite flash point is to be determined, make a trial test beginning at about 10°F (6°C) below the expected value. If no flash is observed, continue heating and test for flash at each 2°F (1°C); the rate of temperature rise may be as rapid as can be conveniently followed when watching both the thermometer and the test flame. When a flash is observed, use it as the expected flash point value in setting the test cup temperature for the finite flash point.

7.4.2 After cleaning the test cup, adjust the temperature so that it is stable at about 5°F (3°C) below the expected flash point (7.3); charge the syringe with a fresh test sample and transfer the sample to the fitting orifice (Fig. 1) taking care not to lose any sample. Then discharge the sample into the test cup by depressing the syringe plunger to its lowest position.

NOTE 3—The test cup temperature is stable when the signal light slowly cycles ON/OFF.

7.4.3 Move the 1-min timing device by rotating its knob clockwise to the required setting. In the meantime, open the gas control valve, and light the pilot and test flames. Adjust the test flame size with the pinch valve so as to match the size of the $\frac{1}{8}$ in. (4 mm) diameter of the gage.

7.4.4 After 1 min has elapsed, turn the heater control toward FULL ON. Apply the test flame at each 1°F (0.5°C) interval by slowly and uniformly opening the slide fully and closing completely over a period of approximately $2\frac{1}{2}$ s. Watch for a flash at each application of the test flame.

7.4.5 When the flash point (7.3.5) is observed, record the flash point temperature and barometric pressure. If the barometric pressure differs from 760 mm (101.3 kPa), make necessary corrections according to 9.1.

7.4.6 Turn off pilot and test flames and clean the testing apparatus.

7.4.7 Never make a repeat flash point determination using the same sample; always use a fresh portion of sample for each new test.

8. Clean-Up of Apparatus

8.1 To prepare for the next test, unlock the lid assembly of the tester and raise to the hinge stop. Soak up sample with an absorbent paper tissue. Clean the underside of the lid and the filling orifice; a pipe cleaner may be of assistance in cleaning the latter.

8.1.1 Any further cleaning necessary may be carried out by complete removal of the lid and shutter assembly. Disconnect the silicone rubber gas tube and slide the lid assembly to the right to remove. If warm, handle gingerly.

8.2 After the cup has been cleaned, its temperature may be rapidly reduced to some stand-by value by turning the temperature control dial to an appropriate point.

8.2.1 It is convenient to hold the test cup at some stand-by temperature (depending on planned usage) to conserve time in bringing the cup within the test temperature range. The cup temperature may be quickly lowered by placing an ice cube in the cup, sopping up the water before it spills over the edge. A neater operation is possible by inserting the aluminum cooling block (4.6) which has been kept in an ice-water bath.

8.3 The syringe is easily cleaned by filling with acetone twice, discharging each time, and allowing to air dry with the plunger removed. Replace the plunger, and pump several times to replace any acetone vapor with air.

9. Correction for Barometric Pressure

9.1 When the barometric pressure differs from 760 mm Hg (101.3 kPa), calculate the flash temperature by means of the following equation:

$$\text{Calculated flash point} = T_F + 0.06\,(760 - P)$$
$$= T_C + 0.03\,(760 - P)$$

where:

T_F, T_C = observed flash point, °F or °C, and
P = barometric pressure, mm Hg

10. Precision

10.1 The following criteria should be used

4.3 *1-min Audible Signal*, a desirable accessory.

4.4 *Thermometer*, conforming to specifications given in Annex A2; test to determine that the scale error does not exceed 0.5°F (1.25°C). The use of a magnifying lens significantly assists in making temperature observations.

4.5 *Syringe*, a 2 ± 0.05-ml capacity at 77°F (25°C), is needed for selecting a uniform size sample. Check the capacity by discharging water into a beaker and weighing. Adjust plunger stop if necessary.

NOTE 1—A unit[4] meeting all of the requirements described above is shown in Fig. 2.

4.6 *Aluminum Alloy Cooling Block (with knob handle)*, that fits snugly within the test cup and is about 2½ times the volume of the cup, is a useful accessory for rapid cooling of the sample cup between tests.

5. Sample

5.1 The size of sample required for each test is 2 ml. Obtain at least a 25-ml sample at the bulk test site and store in a tight screw cap clean glass container.

5.2 Erroneously high flash points may be obtained if precautions are not taken to avoid the loss of volatile material. Do not open sample containers unnecessarily and do not transfer sample unless its temperature is at least 20°F (11°C) below the expected flash point. Discard samples in leaky containers.

6. Preparation of Apparatus

6.1 After thermometer removal or replacement, fix in place in its pocket (Fig. 1) with a good heat transfer paste.

6.2 Before initial use, determine the relationship between the temperature control dial and thermometer readings at intervals not exceeding 10°F (6°C) throughout the scale range of the heater. This calibration is useful in making the desired settings to establish a desired test temperature during a test.

6.3 As nearly as possible, place the tester in a position where it is not exposed to disturbing drafts. Provide a shield if necessary.

6.4 Read the manufacturers operating and maintenance instructions on the care and servicing of the tester, and for specific suggestions on the operation of its various controls.

7. Procedure

7.1 Inspect the inside of the test cup, lid and shutter mechanism for cleanliness and freedom from contamination. Use an absorbent paper tissue to wipe clean, if necessary. Put cover in place and lock securely.

7.2 To use the tester, switch the instrument on and turn the heater dial to a position corresponding to the desired test temperature.

NOTE 2—A calibration curve of Temperature Control Dial setting *versus* Sample Well Temperature is furnished with each instrument. If such a calibration is not available, one should be prepared from observations of test cup temperature for each dial setting as this will be useful in making desired temperature settings.

7.3 *Procedure for Go-No-Go Flash Point:*

7.3.1 Switch the instrument ON and turn the heater dial fully clockwise (FULL ON) causing the heater signal light to glow. When the thermometer reaches a temperature of about 5°F (3°C) below the expected or target flash point temperature (7.3.1.1) reduce the heat input to the test cup by turning the heater control dial, counterclockwise to the point at which the signal light is just extinguished.

7.3.1.1 When the tester is used in the go-no-go configuration, the specification or target value is the expected flash point.

7.3.1.2 When the correct temperature can be dialed on the temperature controller (6.2), the elapsed time to reach it may be greater than when turned to FULL ON, but less attention will be required in the intervening period.

7.3.2 When the test temperature is reached and the signal light is just extinguished, charge the syringe with a sample of the fuel to be tested and transfer the charge to the filler orifice. Discharge the test sample into the test cup by fully depressing the plunger of the syringe and then removing the syringe.

7.3.3 Move the 1-min timing device by rotating the knob clockwise to its stop. Open the gas control valve and light the test and pilot control flames. Adjust the pilot flame with the pinch valve to conform to the size of the 5/32-in. (4-mm) gage.

7.3.4 After 1 min has elapsed, apply the test flame by slowly and uniformly opening the slide valve and then closing it completely over a period of approximately 2½ s. Watch closely

[4] A Setaflash Low Temperature Tester, Model SLTA 1374, as shown in Fig. 2 is manufactured by Stanhope-Seta, Ltd., Egham, Surrey, England, and available in the U.S. from Erdco Engineering Corp., 136 Official Rd., Addison, Ill., 60101.

for judging the acceptability of results (95% confidence):

10.1.1 *Repeatability*[5]—Duplicate results by the same operator should be considered suspect if they differ by more than the following amounts:

Range	Repeatability
70 to 200°F (21 to 94°C)	2°F (1.1°C)

10.1.2 *Reproducibility*[5]—The results submitted by each of two laboratories should not be considered suspect unless they differ by more than the following amounts:

Range	Reproducibility
70 to 200°F (21 to 94°C)	7°F (3.9°C)

[5] The results of the co- ve test program, from which these values have been derived, are filed at ASTM Headquarters as Research Report No. RR-1008; D-2.

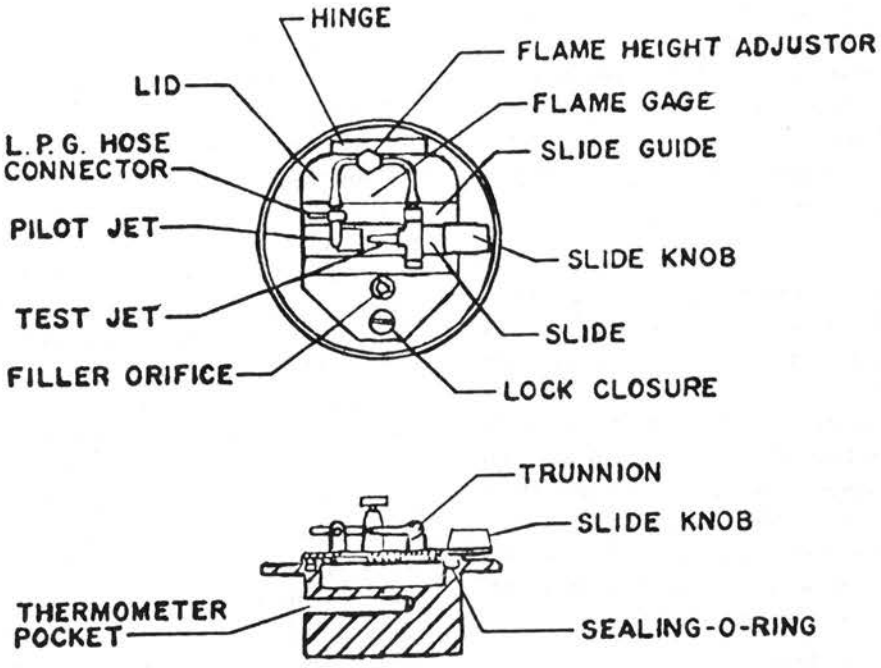

FIG. 1 Setaflash Cup Unit.

Appendix B

Designation: D 56 – 70 (Reapproved 1975)

American National Standard Z11.24-1971
Approved Aug. 17, 1971
By American National Standards Institute
Method 1101—Federal Test Method Standard No. 791b
Replaces Method 4291 of Federal Test Method Standard No. 141A

AMERICAN SOCIETY FOR TESTING AND MATERIALS
1916 Race St., Philadelphia, Pa., 19103

Reprinted from the Annual Book of ASTM Standards, Copyright ASTM
If not listed in the current combined Index, will appear in the next edition.

Standard Method of Test for
FLASH POINT BY TAG CLOSED TESTER[1]

This Standard is issued under the fixed designation D 56; the number immediately following the designation indicates the year of original adoption or, in the case of revision, the year of last revision. A number in parentheses indicates the year of last reapproval.

1. Scope

1.1 This method covers the determination of the flash point, by Tag closed tester, of liquids with a viscosity of below 45 SUS at 100 F (37.8 C) and a flash point below 200 F (93 C) except cut-back asphalts and those liquids which tend to form a surface film under test conditions.

NOTE 1—For the closed cup flash point of liquids with a viscosity of 45 SUS or more at 100 F (37.8 C) or a flash point of 200 F or higher, and those liquids which tend to form a surface film under test conditions use ASTM Method D 93, Test for Flash Point by Pensky-Martens Closed Tester.[2] For cut-back asphalts refer to ASTM Method D 1310, Test for Flash Point of Liquids by Tag Open-Cup Apparatus.[2]

NOTE 2—The U. S. Department of Transportation (OHM)[3] and U. S. Department of Labor (OSHA) have established that liquids with a flash point under 100 F (37.8 C) are flammable as determined by this method for those liquids which have a viscosity less than 45 SUS at 100 F (37.8 C) or do not contain suspended solids or do not have a tendency to form a surface film while under test. Other classification flash points have been established by these Departments for liquids using this test.

Liquids having viscosities more than 45 SUS at 100 F (37.8 C) and contain suspended solids or have a tendency to form a surface film while under test are regulated in accordance with Method D 93.

Coast Guard and Consumer Product Safety Commission Regulations are required by law to define flammable liquids as those having a flash point under 80 F (26.7 C) by an Open Cup Method (Method D 1310).

1.2 *This standard should be used solely to measure and describe the properties of materials, products, or systems in response to heat and flame under controlled laboratory conditions and should not be considered or used for the description, appraisal, or regulation of the fire hazard of materials, products, or systems under actual fire conditions.*

2. Summary of Method

2.1 The sample is placed in the cup of the tester and, with the lid closed, heated at a specified constant rate. A small flame of specified size is directed into the cup at regular intervals. The flash point is taken as the lowest temperature at which application of the test flame causes the vapor above the sample to ignite.

3. Apparatus

3.1 *Tag Closed Tester*—The apparatus is shown in Fig. 1 and described in detail in Appendix A1: Refer to Appendix A2 for directions for checking the condition and operation of the tester.

3.2 *Shield*—A shield 18 in. (460 mm) square and 24 in. (610 mm) high, open in front, is recommended.

3.3 *Thermometers*—For the test cup thermometer, use one as prescribed in Table 1. For the bath thermometer, any convenient type which has an adequately open scale covering the required range may be used; it is often convenient to use the same type of thermometer as used in the test cup.

---

[1] This method is under the joint jurisdiction of ASTM Committee D-1 on Paint, Varnish, Lacquer, and Related Products, and Committee D-2 on Petroleum Products and Lubricants.

Current edition effective Sept. 11, 1970. Originally issued 1918. Replaces D 56 – 64.

[2] *Annual Book of ASTM Standards*, Part 29.

[3] For information on U.S. Department of Transportation's regulations, see Codes of U.S. Regulations 49 CFR Chapter I and for information on U.S. Department of Labor's regulations see Code of U.S. Regulations 29 CFR Chapter XVII. Each of these items are revised annually and may be procured from the Superintendent of Documents, Government Printing Office, Washington, D.C. 20402.

NOTE 3—Whenever thermometers complying with ASTM requirements are not available, thermometers complying with the requirements for The Institute of Petroleum thermometer IP 15F PM-Low may be used.

NOTE 4—There are automatic flash point testers available and in use which may be advantageous in the saving of testing time, permit the use of smaller samples, and other factors which may merit their use. If automatic testers are used, the user must be sure that all of the manufacturer's instructions for calibrating, adjusting, and operating the instrument are followed. In any cases of dispute, the flash point as determined manually shall be considered the referee test.

4. Sample

4.1 Erroneously high flash points may be obtained if precautions are not taken to avoid the loss of volatile material. Containers shall not be opened unnecessarily and transfers shall not be made unless the sample temperature is at least 20 F (11 C) below the expected flash point. Samples in leaky containers shall be discarded.

5. Preparation of Apparatus

5.1 Support the tester on a level steady table. Unless tests are made in a draft-free room or compartment, surround the tester on three sides by the shield for protection from drafts. Tests made in a laboratory draft hood or near ventilators are not to be relied upon.

5.2 Gas is recommended for the test flame. If gas is not available, insert a wick of cotton in the burner tip, place small quantity of cotton waste in the chamber to which the burner tip is attached, and fill the chamber with signal, sperm, or lard oil.

6. Procedure

6.1 For flash points below 55 F (13 C) or above 140 F (60 C), use as bath liquid a 1 + 1 mixture of water and ethylene glycol. For flash points between 55 F (13 C) and 140 F (60 C), either water or water-glycol mixture may be used as bath liquid (Note 4). The temperature of the liquid in the bath shall be at least 20 F (11 C) below the expected flash point at the time of introduction of the sample into the test cup. Do not cool the bath liquid by direct contact with carbon dioxide or "dry ice." Place the test cup in position in the bath.

NOTE 5—Due to possible difficulty in maintaining the prescribed rate of temperature rise and due to the formation of ice on the lid, results by this method for samples having flash points below 32 F (0 C) may be somewhat unreliable. Trouble due to ice formation on the slide may be minimized by carefully lubricating the slide shutter with high-vacuum silicone lubricant.

6.2 Using a graduate and taking care to avoid wetting the cup above the final liquid level, measure 50 ± 0.5 ml of the sample into the cup, both the sample and graduate being precooled, if necessary, so that the sample temperature at the time of measurement will be 80 ± 10 F (27 ± 5.6 C) or at least 20 F (11 C) below the expected flash point, whichever is lower. It is essential that the sample temperature be maintained at least 20 F (11 C) below the expected flash point during the transfers from the sample container to the graduate and from the graduate to the test cup. Destroy air bubbles on the surface of the sample. Wipe the inside of the cover with a clean cloth or absorbent tissue paper; then attach the lid, with the thermometer in place, to the bath collar.

6.3 Light the test flame, adjusting it to the size of the small bead on the cover. Operate the mechanism on the cover in such a manner as to introduce the test flame into the vapor space of the cup, and immediately bring it up again. The time consumed for the full operation shall be about 1 s, or the time required to pronounce distinctly the words "thousand and one." Avoid any jerkiness in the operation of depressing and raising the test flame.

6.4 *Flash Points Below 140 F (60 C)*—If the flash point of the sample is known to be below 140 F (60 C), apply and adjust the heat so that the temperature of the sample will rise at a rate of 2 F (1 C)/min ± 6 s. When the temperature of the sample in the test cup is 10 F (5.6 C) below its expected flash point, apply the test flame in the manner just described in 6.3, and repeat the application of the test flame after each 1 F (0.6 C) rise in temperature of the sample.

6.5 *Flash Points at or above 140 F (60 C)*—If the flash point of the sample is known to be 140 F or higher, apply and adjust the heat so that the temperature of the sample will rise at a rate of 5 F (3 C)/min ± 6 s. When the temperature of the sample in the test cup is 10 F (5.6 C) below its expected flash point, apply the test flame in the manner described in 6.3, and repeat the application of the test flame after each 2 F (1 C) rise in temperature of the sample, at each temperature reading

that is a multiple of 2 F (1 C).

6.6 When the test flame application causes a distinct flash in the interior of the cup, observe and record the temperature of the sample as the flash point. Do not confuse the true flash with the bluish halo which sometimes surrounds the test flame at applications immediately preceding the actual flash.

6.7 Discontinue the test and remove the source of heat. Lift the lid and wipe off the thermometer bulb. Remove the sample cup, empty, and wipe dry.

6.8 If, at any time between the first introduction of the test flame and the observation of the flash point, the rise in temperature of the sample is not within the specified rate or if the actual flash point differs from the expected flash point by an amount greater than 4 F (2 C), discard the result and repeat the test, adjusting the source of heat to secure the proper rate of temperature rise and/or using a modified "expected flash point," as required.

NOTE 6—Never make a repeat test on the same portion of sample once used; always take a fresh portion of sample for each test.

7. Correction for Barometric Pressure

7.1 Observe and record the barometric pressure at the time of the test. Make a correction on the following basis: for each 25 mm (1 in.) below 760 mm (29.92 in.) barometric reading, add 0.9 C (1.6 F) to the observed flash point; for each 25 mm (1 in.) above 760 mm (29.92 in.) barometric reading, subtract 0.9 C (1.6 F) from the observed flash point. After applying the correction, round the value obtained to the nearest whole number.

8. Precision

8.1 The following criteria should be used for judging the acceptability of results (95 percent probability).[4]

8.1.1 *Repeatability*—Duplicate results by the same operator should not be considered suspect unless they differ by more than the following amounts:

Flash Point	Repeatability
Below 140 F (60 C)	2 F (1.1 C)
140 F (60 C) to 199 F (93 C)	3 F (1.7 C)

8.1.2 *Reproducibility*—The results submitted by each of two laboratories should not be considered suspect unless the two results differ by more than the following amounts:

Flash Point	Reproducibility
Below 55 F (13 C)	6 F (3.3 C)
55 F (13 C) to 139 F (59 C)	4 F (2.2 C)
140 F (60 C) to 199 F (93 C)	6 F (3.3 C)

[4] Supporting data for this method have been filed at ASTM Headquarters as RR: D-2-1003.

[5] *Annual Book of ASTM Standards*, Part 25.

TABLE 1 Thermometers

For Tests	Below 40 F (4 C)	At 40 to 120 F (4 to 49 C)	Above 120 F (49 C)
Use ASTM Thermometer[a]	57F or 57C	9F or 9C 57F or 57C	9F or 9C

[a] Complete specifications for these thermometers are given in ASTM Specification E 1, for ASTM Thermometers.[5]

KEY: Existing rules are printed in standard type face. Proposed additions to existing rules are printed in **boldface**, while proposed deletions from existing rules are printed within [single brackets]. Additions to proposed rules are **underlined and boldfaced**, while deletions from proposed rules are printed within [[double brackets]].

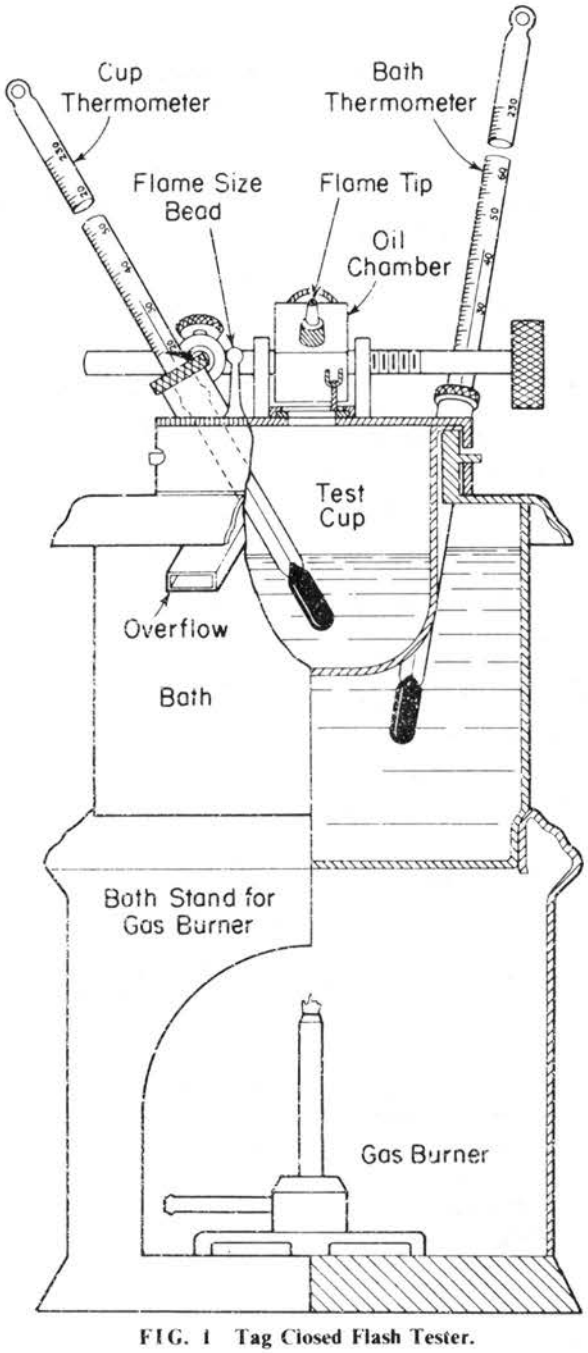

FIG. 1 Tag Closed Flash Tester.

APPENDIXES

A1. APPARATUS

A1.1 The Tag closed tester shall consist of the test cup, lid with test flame, and liquid bath conforming to the following requirements:

A1.1.1 *Test Cup*, of brass or other nonrusting metal of equivalent heat conductivity, conforming to dimensional requirements prescribed in Table A1. It shall weigh 68 ± 1 g.

A1.1.2 *Lid:*

A1.1.2.1 The lid comprises a circle of nonrusting metal with a rim projecting downward about 5/8 in. (15.9 mm), a slide shutter, a device which simultaneously opens the shutter and depresses the tip of the tube which carries fuel through to the test flame, and a slanting collar in which the cup-thermometer ferrule is inserted. Figure A1 gives a diagram of the upper surface of the lid, showing di-

mensions and positions of the three holes opened and closed by the shutter, and the size and position of the opening for the cup thermometer.

A1.1.2.2 The rim shall fit the collar of the liquid bath with a clearance not exceeding 0.002 in. (0.05 mm) and shall be slotted in such a manner as to press the lid firmly down on the top of the cup when the latter is in place in the bath. When this requirement is not met, the vertical position of the cup in the bath shall be suitably adjusted, as by placing a thin ring of metal under the flange of the cup.

A1.1.2.3 The shutter shall be of such size and shape that it covers the three openings in the lid when in the closed position and uncovers them completely when in the open position. The nozzle of the flame-exposure device shall conform to the dimensions given in Table A1. The device shall be designed and constructed so that opening the shutter depresses the tip to a point approximately 0.08 in. (2 mm) to the right of the horizontal center of the middle opening of the lid. (Refer to lower part of Fig. A2.) This will bring the test flame to the approximate center of the opening. The plane of the underside of the lid shall be between the top and bottom of the opening in the tip of the flame-exposure device when the latter is fully depressed.

A1.1.2.4 The collar for the cup-thermometer ferrule shall be set at an angle which permits placement of the thermometer with its bulb approximately in the horizontal center of the cup, at a depth prescribed in Table A1.

A1.1.3 *Liquid Bath*, conforming to the limiting or minimum dimensions shown in Fig. A2. It shall be of brass, copper, or other noncorroding metal of substantial construction. Sheet metal of about No. 20 B & S gage (0.812 mm) is satisfactory. It may, if desired, be lagged with heat-insulating material to facilitate control of temperature.

A1.1.4 *Heater*, of any type (electric, gas, alcohol, etc.) capable of controlling temperature as required in Section 6. An external electric heater, controlled by a variable voltage transformer, is recommended.

A1.1.5 *Bath Stand*—For electric heating, any type of stand may be used. For alcohol lamp or gas burner, a stand, as illustrated in Fig. 1, to protect the flame from air currents (unless tests can be made in a draft-free room) is required.

A2. CHECKING CONDITION AND OPERATION OF TAG CLOSED TESTERS

A2.1 Material

A2.1.1 *p-Xylene*,[6] conforming to the following requirements:

Specific gravity (60/60 F) (15.6/15.6 C), 0.860 min, 0.866 max.

Boiling range.....2 C max from start to dry point, when tested by ASTM Method D 850, Test for Distillation of Industrial Aromatic Hydrocarbons and Related Materials,[2] or Method D 1078, Test for Distillation Range of Volatile Organic Liquids.[2] The range shall include the boiling point of pure *p*-xylene, which is 138.35 C (281.03 F).

Freezing point .....11.23 C, min (95 percent molal purity) as determined by ASTM Method D 1015, Test for Freezing Points of High-Purity Hydrocarbons.[7]

A2.2 Procedure

A2.2.1 Determine the flash point of the *p*-xylene, following the directions in Sections 4 to 7. When the tester is operating properly, a value of 81 ± 1 F (27.2 ± 0.6 C) will be obtained.

A2.2.2 If the flash point obtained on *p*-xylene is not within the limits stated in A2.2.1, check the condition and operation of the apparatus to ensure conformity with the details listed in Appendix A1, especially with regard to tightness of the lid (A1.1.2.2), the action of the shutter and the position of the test flame (A1.1.2.3), and the angle and position of the thermometer (A1.1.2.4). After adjustment, if necessary, repeat the test, with special attention to procedural details prescribed in Section 6.

A3. MANUFACTURING STANDARDIZATION

A3.1 The cup thermometer, which conforms also to the specifications for the low-range thermometer used in the Pensky-Martens flash tester, Method D 93, is frequently supplied by the thermometer manufacturer with a metal ferrule intended to fit the collar on the lid of the flash tester. This ferrule is frequently supplemented by an adapter which is used in the larger-diameter collar of the Pensky-Martens apparatus. Differences in dimensions of these collars, which are immaterial in their effect on the results of tests, are a source of considerable unnecessary trouble to manufacturers and suppliers of instruments, as well as to users.

A3.2 Subcommittee 21 on Metalware Laboratory Apparatus, of ASTM Committee E-1 on Methods of Testing, has studied this problem and has established some dimensional requirements which are shown, suitably identified, in Figs. A1, A3, and A4. Conformity to these requirements is not mandatory but is desirable to users as well as suppliers of Tag closed testers.

[6] Available as Flash Point Check Fluid (*p*-xylene) from Special Products Div., Phillips Petroleum Co., Bartlesville, Okla.

[7] *Annual Book of ASTM Standards*, Part 23.

TABLE A1 Dimensional Requirements

Depth of bath liquid surface below top of test cup	1.094 ± 0.016 (27.8 ± 0.4 mm)
Depth of sample surface below top of test cup	1.156 + 0.031 in. (29.4 ± 0.8 mm)
Depth of bottom of bulb of test thermometer below top of cup when in place	1.77 ± 0.03 in. (45.0 ± 0.8 mm)
Inside diameter of test cup at top	2.125 ± 0.005 in. (54.0 ± 0.1 mm)
Diameter of bead on top of cover	0.156 ± 0.031 in. (4.0 ± 0.8 mm)
Diameter of opening in tip of test flame nozzle	0.049 ± 0.010 in. (1.2 ± 0.3 mm)
Outside diameter of tip of test flame nozzle	0.079 in. max (2.0 mm max)

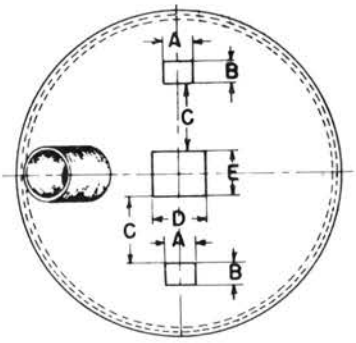

A – 0.281"
B – 0.188"
C – 0.594"
D – 0.469"
E – 0.406"

Note:
All dimensions ±0.005" unless otherwise shown.

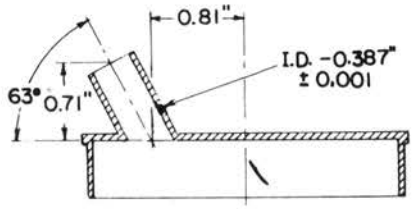

TOP OF LID SHOWING POSITION AND DIMENSIONS OF OPENINGS

Metric Equivalents

in.	mm	in.	mm
0.001	0.03	0.406	10.32
0.005	0.13	0.469	11.92
0.188	4.78	0.594	15.10
0.281	7.15	0.71	18.0
0.387	9.84	0.81	20.6

NOTE—Dimensions relating to the size and position of the thermometer collar are recommended but not mandatory.

FIG. A1 Top of Lid Showing Position and Dimensions of Openings

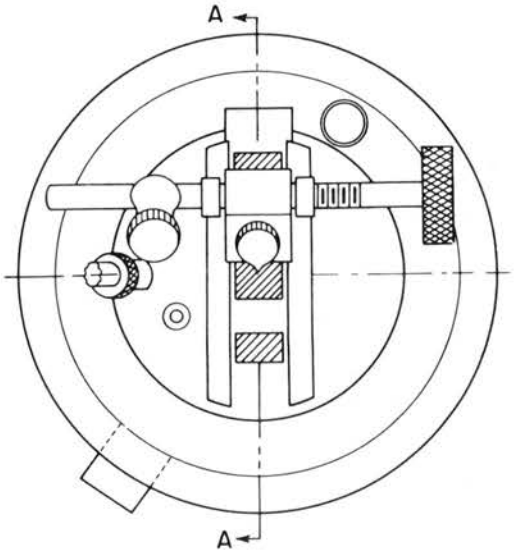

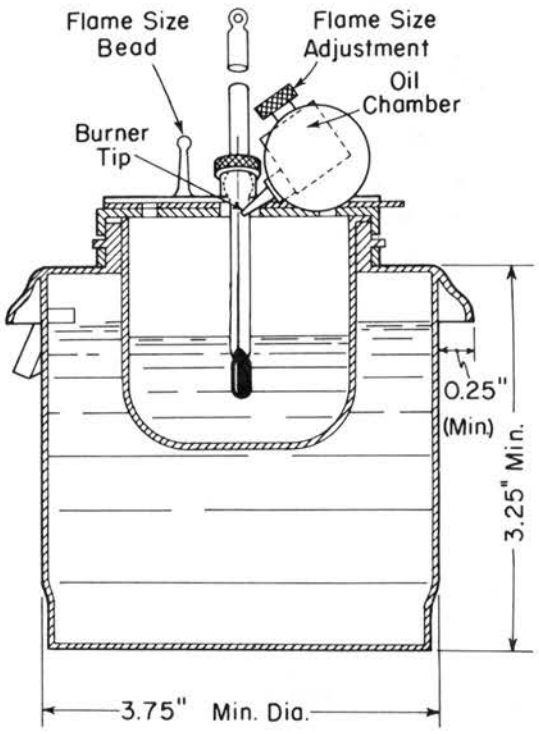

Metric Equivalents

in.	0.25	3.25	3.75
mm	6.4	82.6	95.3

FIG. A2 Section of Liquid Bath and Cup. Metric Equivalents

Appendix C

Designation: D 3278 – 73

AMERICAN SOCIETY FOR TESTING AND MATERIALS

1916 Race St., Philadelphia, Pa., 19103

Reprinted from the Annual Book of ASTM Standards, Copyright ASTM

Standard Methods of Test for FLASH POINT OF LIQUIDS BY SETAFLASH CLOSED TESTER[1]

This Standard is issued under the fixed designation D 3278; the number immediately following the designation indicates the year of original adoption or, in the case of revision, the year of last revision. A number in parentheses indicates the year of last reapproval.

1. Scope

1.1 This method covers the determination of the flash point, by Setaflash® Closed Tester, of paints, enamels, lacquers, varnishes, and related products and their components having flash points, between 32 and 230°F (0 to 110°C) having a viscosity lower than 150 stokes at 77°F (25°C).[2]

NOTE 1—Tests at higher or lower temperatures are possible.

1.2 The procedure may be used to determine whether a material will or will not flash at a specified temperature or to determine the finite temperature at which a material will flash.

1.3 The results from this method are comparable to those obtained by the Tag Closed Tester procedure described in Method D 563 and the Pensky-Martens Tester method described in Method D 93.

2. Applicable Documents

2.1 *ASTM Standards:*

D 56 Test for Flash Point by Tag Closed Tester[2]

D 93 Test for Flash Point by Pensky-Martens Closed Tester[2]

D 850 Test for Distillation of Industrial Aromatic Hydrocarbons and Related Materials[2]

D 1015 Test for Freezing Points of High-Purity Hydrocarbons[3]

D 1078 Test for Distillation Range of Volatile Organic Liquids[2]

3. Summary of Method

3.1 By means of a syringe, 2 ml of sample is introduced through a leakproof entry port into the tightly closed Setaflash Tester or directly into the cut that has been brought to within 5°F (3°C) below the expected flash point. As a flash/no flash test, the *expected* flash point temperature may be a specification or other operating requirements. The temperature of the apparatus is raised to the precise temperature of the expected flash point by slight adjustment of the temperature dial. After 1 min, a test flame is applied inside the cup and note is taken as to whether the test sample flashes or not. If a repeat test is necessary, a fresh sample should be used.

3.2 For a finite flash measurement, the temperature is sequentially increased through the anticipated range, the test flame being applied at 9°F (5°C) intervals until a flash is ovserved. A repeat determination is then made using a fresh sample, starting the test at the temperature of the last interval before the flash point of the material and making tests at increasing 1°F (0.5°C) intervals.

4. Apparatus

4.1 *Setaflash Tester*[4], shown in Fig. X1, and described in Appendix X1.

4.2 *Thermometers*[5] conforming to specifica-

---

[1] These methods are under the jurisdiction of ASTM Committee D-1 on Paint, Varnish, Lacquer, and Related Products.

Current edition approved Oct. 29, 1973. Published December 1973.

[2] *1974 Annual Book of ASTM Standards*, Part 29.

[3] *1973 Annual Book of ASTM Standards*, Part 18.

[4] Unit shown in Fig. X1 is manufactured by Stanhope-Seta Ltd., Park Close, Egham, Surrey, England. It is available in the USA from Erdco Engineering Corp., 136 Official Road, Addison, Ill. 60101, or from Paul N. Gardner Co., Station 9, P. O. Box 6633, Fort Lauderdale, Fla. 33316.

[5] Thermometers may be obtained from the suppliers of the Setaflash.

tions given in Table X1. Test to determine that the scale error does not exceed 0.5°F (0.25°C). The use of a magnifying lens significantly assists in making temperature observations.

4.3 *Glass Syringe*, 2 ± 0.1-ml capacity at 77°F (25°C), to provide a means of taking a uniform sample. Check the capacity by discharging water into a weighing bottle and weighing. Adjust plunger if necessary. A disposable syringe of equal precision may be used.

4.4 *Cooling Block*, aluminum (described in Appendix X2) which fits snugly within the test cup for rapid cooling of the sample cup.

4.5 *Barometer.*

5. Reagents and Materials

5.1 *p-Xylene*[6]—Reference standard for checking the Setaflash Tester.

5.2 *Cooling Mixture* of ice water or dry ice (solid CO_2) and acetone.

5.3 *Liquefied Petroleum Gas.*

5.4 *Heat Transfer Paste*[7]

6. Sampling

6.1 The sample size for each test is 2 ml. Obtain at least a 25-ml sample from the bulk source and store in a nearly full tightly closed clean glass container or in other container suitable for the type of liquid being sampled.

6.2 Erroneously high flash points may be obtained if precautions are not taken to avoid loss of volatile material. Do not open sample containers unnecessarily and do not transfer the sample to the cup unless its temperature is at least 20°F (10°C) below the expected flash point. Discard samples in leaky containers.

7. Preparation of Apparatus

7.1 Prior to initial use or after removal of the thermometer, insert the thermometer into its pocket, Fig. X2, with a good heat transfer paste.

7.2 To help in making the necessary settings during a test, determine the relationship between the temperature control dial and thermometer readings at intervals not over 10°F (5°C) throughout the scale range of heater before the initial use.

7.3 Place the tester in a subdued light and in a position where it is not exposed to disturbing drafts. Provide a black-coated shield, if necessary.

7.4 Read the manufacturer's operating and maintenance instructions on the care and servicing of the tester. Observe the specific suggestions regarding the operation of its various controls.

7.5 Check the accuracy of the tester by determining the flash point of the *p*-xylene reference standard in duplicate (Appendix X3). The average of the results should be 81 ± 1.5°F (27.2 ± 0.8°C). If not, remove the thermometer and observe whether sufficient heat transfer paste surrounds the thermometer to provide good heat transfer from the cup to the thermometer.

METHOD A—FLASH/NO FLASH

8. Procedure—Ambient to 230°F (110°C)

8.1 Inspect the inside of the test cup, lid, and shutter mechanism for cleanliness and freedom from contamination. Use an absorbent tissue to wipe clean, if necessary. Lock the cover lid tightly in place.

8.2 Switch the tester on, if not already at stand-by. To rapidly approach the specification flash temperature of the charged sample, turn the heater dial fully clockwise (Note 2) causing the heater signal (red) light to glow. When the thermometer indicates a temperature of about 5°F (3°C) below the specification or target flash point temperature, reduce the heat input to the test cup by slowly turning the heater control dial counter clockwise until the signal light goes out (Note 3).

NOTE 2—When the correct temperature is dialed on the temperature controller, the elapsed time to reach it may be greater than when turned Full On, but less attention will be required in the intervening period.

NOTE 3—The test cup temperature is stable when the signal light slowly cycles on and off.

8.3 Determine the barometric pressure to determine the corrected specification temperature at that barometric pressure (see 13.2).

8.4 After the test cup temperature has stabilized at the specification or target flash point, charge the syringe with the sample to be tested and transfer the syringe to the filling orifice

[6] *P*-xylene is available as "Flash Point Check Fluid" from Special Products Div., Phillips Petroleum Co., Bartlesville, Okla.

[7] Heat transfer paste is available from the supplies of the Setaflash Tester. Dan Corning also can supply a similar paste as their no 340 silicone.

(Fig. X2) taking care not to lose any sample. Discharge the sample into the test cup by depressing the syringe plunger to its lowest position, then remove the syringe. If the sample has a viscosity greater than 45 SUS at 100°F (37.8°C) or equivalent of 9.5 cSt at 77°F (25.0°C), discharge the contents of the syringe directly into the cup. Immediately close tightly the lid and shutter assembly.

8.5 Set the 1-min timing device by rotating its knob clockwise to the required setting. In the meantime, open the gas control valve and light the pilot and the test flames. Adjust the test flame size with the pinch valve so as to match the size of the $\frac{1}{32}$ in. (4-mm) diameter flame gage.

8.6 After 1 min has elapsed, observe the temperature. If at the specification temperature (accounting for the differences of the barometer reading from 760 mm), apply the test flame by slowly and uniformly opening the slide fully and closing completely over a period of approximately 2½ s. Watch for a flash.

NOTE 4—The sample is considered to have flashed only if a comparatively large blue flame appears and propagates itself over the surface of the liquid. Occasionally, particularly near the actual flash point temperature, application of the test flame may give rise to a halo; this should be ignored.

8.7 Turn off the test and the pilot flame. Clean the apparatus in preparation for the next test.

9. Procedure—32°F (0°C) to Ambient

9.1 If the specification or target flash point is at or below ambient temperature, cool the sample to 10 to 20°F (5 to 10°C) below that point by some convenient means.

9.2 Cool the tester to approximately the temperature of the sample by inserting the cooling block (Appendix X1.2) filled with a cooling mixture (Notes 5 and 6) into the sample well. Dry the cup with a paper tissue to remove any collected moisture prior to adding the sample.

NOTE 5: **Caution**—Be careful in handling the cooling mixture and cooling block; wear gloves and goggles. Mixtures such as dry ice and acetone can produce severe frost bite.

NOTE 6: **Caution**—Be careful in inserting the cooling block into the tester cup to prevent damage to the cup.

9.3 Introduce the sample as in 8.4. Allow the temperature to rise under ambient conditions or increase the temperature of the cup by rotating the heater controller clockwise slowly until the specification temperature adjusted for barometric pressure is reached. Determine whether the sample flashes as in 8.5 and 8.6.

9.4 Turn off the test and pilot flames. Clean up the apparatus.

METHOD B—FINITE FLASH POINT

10. Procedure—Ambient to 230°F (110°C)

10.1 *Preliminary or Trial Test*—Follow steps 8.1 to 8.5 omitting the barometric reading and using an estimated finite flash point instead of a specification flash point temperature.

10.2 After 1 min has elapsed, observe the temperature, apply the test flame by slowly and uniformly opening the slide fully and closing completely over a period of 2½ s. Watch for a flash (Note 3).

10.3 *Finite Flash Point*—If a flash is observed proceed as below.

10.3.1 Using a temperature of 9°F (5°C) lower than the temperature observed in 10.2, repeat 10.1 and 10.2 (Note 6). If a flash is still observed, repeat at 9°F (5°C) lower intervals until no flash is observed.

NOTE 7—Never make a repeat test on the same sample. Always take a fresh portion for each test.

10.3.2 Repeat 10.1 and 10.2 with a new sample, stabilizing the test cup temperature at the temperature at which no flash occurred previously. Observe if a flash occurs at this temperature. If no flash occurs, increase the temperature at 1°F (0.5°C) intervals by making small incremental adjustment to the temperature controller and allowing 1-min intervals between each increment and the flash point test. Record the temperature at which the flash acutally occurs. Record the barometric pressure. Turn off pilot and test flames and clean up tester.

10.4 *Finite Flash Point*—If no flash point is observed in 10.2, proceed as follows:

10.4.1 Using a test temperature of 9°F (5°C) higher than the temperature observed in 10.2, repeat steps 10.1 and 10.2 (Note 7). If no flash is observed, repeat at 9°F (5°C) higher intervals until a flash is observed.

10.4.2 Repeat step 10.3.2 with a new sample.

11. Procedure—32°F (0°C) to Ambient Temperature

11.1 *Preliminary or Trial Test*—Cool the sample to 5 to 10°F (3 to 5°C) below the expected flash point.

11.2 Cool the tester to approximately the temperature of the sample by inserting the cooling block filled with a cooling medium, into the sample well (Notes 4 and 5).

11.3 Insert the sample as in 8.4. Set the 1-min timing device. After 1 min, apply the test flame by slowly and uniformly opening the slide fully and closing completely over a period of approximately 2½ s. Observe for a flash (Note 3). Record the temperature.

11.4 *Finite Flash Point*—If a flash is observed, proceed as follows:

11.4.1 Cool a new sample and the sample cup to 9°F (5°C) below the previous temperature (11.3). After 1 min, check for a flash as in 11.3. If the sample flashes, repeat test at 9°F (5°C) lower intervals until no flash is observed.

11.4.2 Repeat with a new sample, cooling both sample and tester to the temperature at which the sample did not flash. After 1 min, observe if a flash occurs at this temperature, if not, increase the temperature at 1°F (0.5°C) intervals by making small incremental adjustments to the temperature controller, allowing 1 min between each increment and the test for the flash point. Record the temperature at which the flash actually occurs. Record the barometric pressure.

11.5 *Finite Flash Point*—If no flash point is observed proceed as follows:

11.5.1 Using a test temperature of 9°F (5°C) higher than the temperature observed in 11.3, repeat step 11.3 (Note 6). If no flash is observed, repeat at 9°F (5°C) higher intervals until flash is observed.

11.5.2 Using a new sample, repeat 11.4.2 until a flash occurs. Record the temperature at which the flash occurs and the barometric pressure.

12. Clean Up Of Apparatus and Preparation for Next Test

12.1 To prepare for the next test, unlock the lid assembly of the tester and raise to the hinge stop. Soak up liquid samples with an absorbent paper tissue and wipe dry. Clean the underside of the lid and filling orifice. A pipe cleaner may be of assistance in cleaning the orifice.

12.2 If the sample is a viscous liquid or contains dispersed solids, after soaking up most of the sample, add a small amount of a suitable solvent for the sample to the cup and then soak up the solvent and wipe clean the interior surfaces of the cup with an absorbent tissue paper.

NOTE 8—If necessary to remove residual high boiling solvent residues, moisten tissue with acetone and wipe clean.

NOTE 9—If any further cleaning is necessary, remove the lid and shutter assembly. Disconnect the silicone rubber hose and slide the lid assembly to the right to remove. If warm, handle carefully.

12.3 After the cup has been cleaned, its temperature may be rapidly increased to some stand-by value by turning the temperature control dial to an appropriate point.

NOTE 10—It is convenient to hold the test cup at some stand-by temperature (depending on planned usage) to conserve time in bringing the cup within the test temperature range. The cup temperature may be quickly lowered by inserting the aluminum cooling block filled with an appropriate cooling mixture into the cup.

12.4 The syringe is easily cleaned by filling it several times with acetone or any compatible solvent, discharging the solvent each time, and allowing the syringe to air dry with the plunger removed. Replace the plunger, and pump several times to replace any solvent vapor with air.

13. Correction for Barometric Pressure

13.1 When the barometric pressure differs from 760 mm Hg (101.3 kPa), calculate the flash point temperature by means of the following equations:

$$\text{Calculated flash point} = F + 0.06\,(760 - P)$$
$$= C + 0.03\,(760 - P)$$

where:

F, C = observed flash point, °F (or °C), and
P = barometric pressure, mm Hg.

13.2 Likewise determine the corrected specification flash point by the following equation:

$$F = S - 0.06\,(760 - P)$$
$$C = S - 0.03\,(760 - P)$$

where:

F, C = flash point to be observed to obtain the specification flash point at standard pressure (S),
S = specification flash point.

14. Report

14.1 When using the flash/no flash method, report whether the sample flashed at the required flash point and that the flash/no flash method was used.

14.2 If an actual flash point was determined, report the average of duplicate runs to nearest 1°F (0.5°C) provided the difference between the two values does not exceed 2°F (1°C).

15. Precision[8]

15.1 The following criteria should be used for judging the acceptability of results (95 % confidence):

15.1.1 Liquids at or below 45 SUS at 100°F or equivalent viscosity measurements.

15.1.1.1 *Repeatability*—The average of duplicate results obtained by the same operator on different days should be considered suspect if they differ by more than 3°F (1.7°C).

15.1.1.2 *Reproducibility*—The average of duplicate results, obtained by each of two laboratories should not be considered suspect unless they differ by more than 6°F (3.3°C).

15.1.2 Viscous liquids above 45 SUS at 100°F or liquids with dispersed solids.

15.1.2.1 *Repeatability*—Duplicate results obtained by the same operator on different days should be considered suspect if they differ by more than 6°F (3.3°C).

15.1.2.2 *Reproducibility*—The average of duplicate results obtained by each of two laboratories should not be considered suspect unless they differ by more than 9°F (5°C).

[8] Supporting data for this method has been filed at ASTM Headquarters RR 0-1-1000 and reported in Journal of Paint Technology, Vol 45, No. 581 Page 44.

APPENDIXES

X1. APPARATUS SPECIFICATIONS

X1.1 A typical apparatus is shown in Fig. X1 and X2. Electrical heaters are fastened to the cup in such a way so as to provide for efficient transfer of heat. The tester includes a variable heater control device with a scaled dial and a visible signal to indicate when energy is or is not being applied. Energy may be supplied from a 115 or 230-V a-c main service (for stationary use) or by a 12-V d-c battery service (for field use). A regulatable test flame and a pilot flame to maintain the test flame, are provided. These flames may be fueled by piped gas service (fixed location) or by a self-contained tank of liquefied petroleum gas (5.3) (for portability). A test flame, $\frac{3}{32}$ in. (4 mm) in diameter, is provided against which the size of the flame may be judged. Never recharge the gas tank with the pilot or test flames lighted, nor in the vicinity of other naked flames. A 1-min audible signal is a desirable accessory.

X2. COOLING BLOCK

X2.1 The cooling block with dimensions as shown in Fig. X3, is made of aluminum and covered with pipe insulation.

X3. SPECIFICATIONS FOR *P*-XYLENE REFERENCE STANDARD

X3.1 *Specific Gravity (60/60°F) (15.6/15.6°C)*—0.860 min, 0.866 max.

X3.2 *Boiling Range*—2°C max from start to dry point, when tested by Method D 850 or Method D 1078. The range shall include the boiling point of pure *p*-xylene, which is 138.35°C (281.03°F).

X3.3 *Freezing Point*—11.23°C min (95 % molal purity) as determined by Method D 1015.

KEY: Existing rules are printed in standard type face. Proposed additions to existing rules are printed in **boldface**, while proposed deletions from existing rules are printed within [single brackets]. Additions to proposed rules are **underlined and boldfaced**, while deletions from proposed rules are printed within [[double brackets]].

TABLE X1 Setaflash® Thermometers

ASTM No., Name	XXF (XXC), Setaflash Medium	XXF (XXC) Setaflash Low
Range	32 to 230°F (0 to 110°C)	−10°C + 160° (−23 to 70°C)
Immersion	44.5 ± 1 mm	44.5 ± 1 mm
Graduations:		
Subdivisions	1 ± F (1°C)	1°F (1°C)
Long lines at each	10°F (10°C)	10°F (10°C)
Number at each[a]	10°F (10°C)	10°F (10°C)
Scale error, max	0.5°F (0.25°C)	0.5°F (0.25°C)
Expansion chamber, for heat to[b]	248°F (120°C)	176°F (80°C)
Total length	204 ± 3 mm	204 ± 3 mm
Stem, OD	6 to 7 mm	6 to 7 mm
Bulb:		
Length	11.7 to 13.7 mm	11.7 to 13.7 mm
OD	4.7 to 5.7 mm	4.7 to 5.7 mm
Scale location:		
Bottom of bulb to 32°F (0°C)	49 to 51 mm	
Bottom of bulb to −10°F (−23°C)	...	59 mm to 61 mm
Bottom of bulb to 230°F (110°C)	163 to 176 mm	...
Bottom of bulb to 160°F (71°C)	...	183 to 185 mm

[a] Number so that figures are read from right to left in a horizontal plane.
[b] Expansion bulb to be nitrogen filled for horizontal operation.

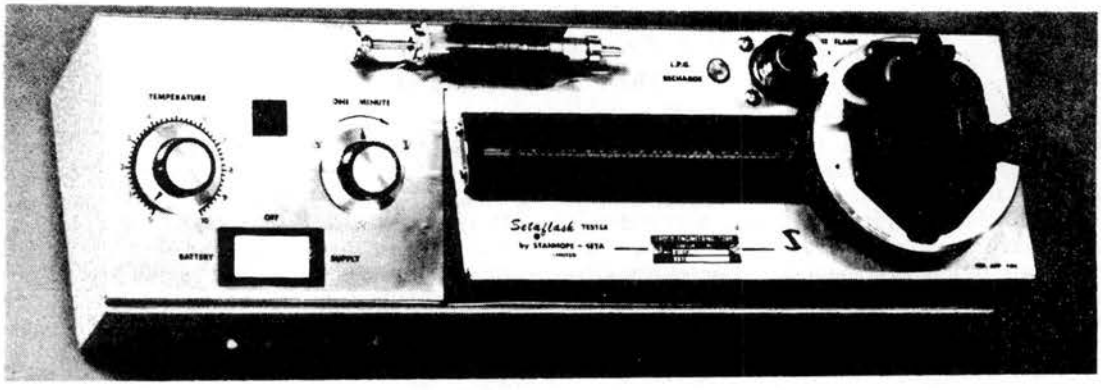

FIG. X1 Setaflash Tester.

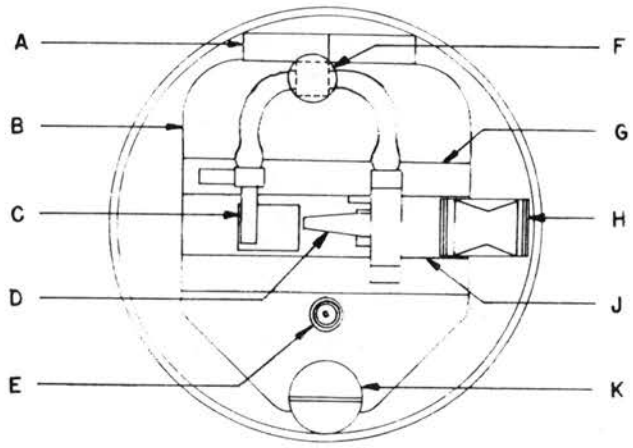

A - HINGE
B - LID
C - PILOT JET
D - TEST JET
E - FILLER ORIFICE
F - GAS CONTROL SCREW
G - SLIDE GUIDE
H - SLIDE KNOB
J - SLIDE
K - LOCK CLOSURE
L - SEALING O-RING
M - THERMOMETER
N - SAMPLE BLOCK
P - THERMOMETER POCKET

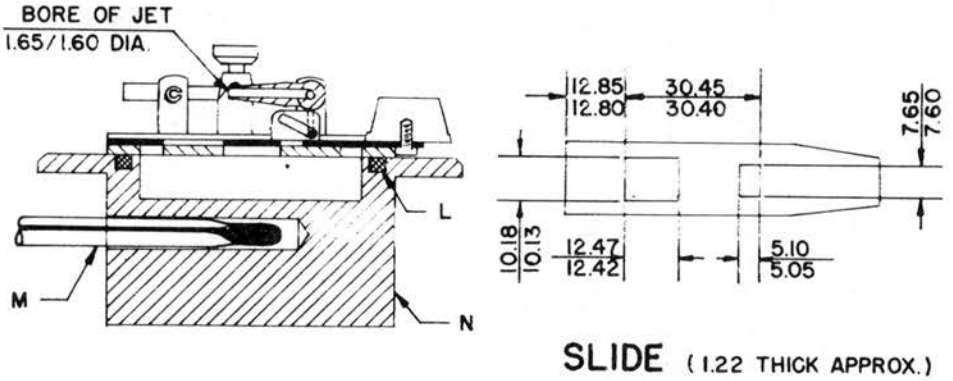

SLIDE (1.22 THICK APPROX.)

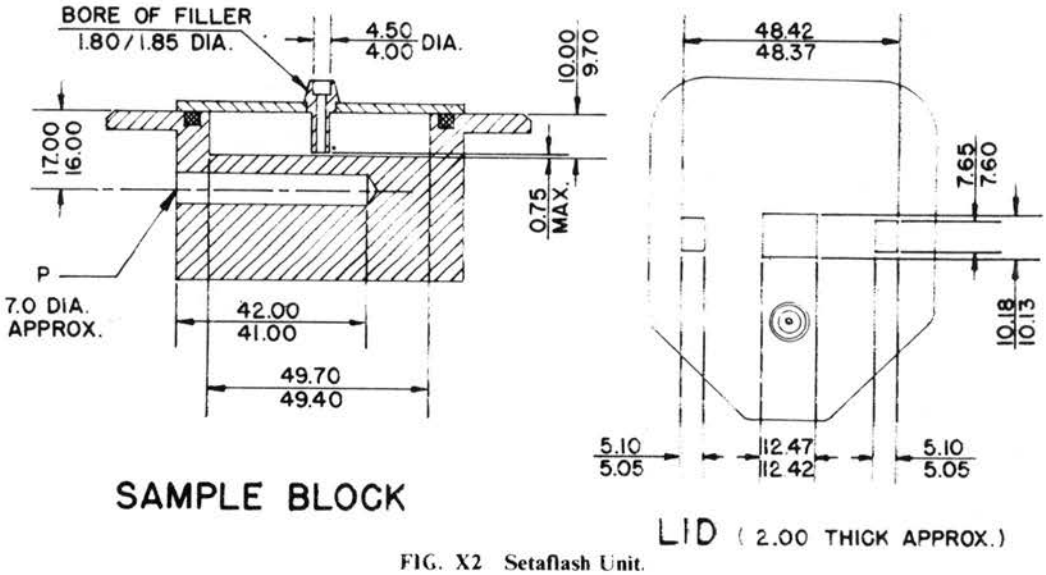

SAMPLE BLOCK

LID (2.00 THICK APPROX.)

FIG. X2 Setaflash Unit.

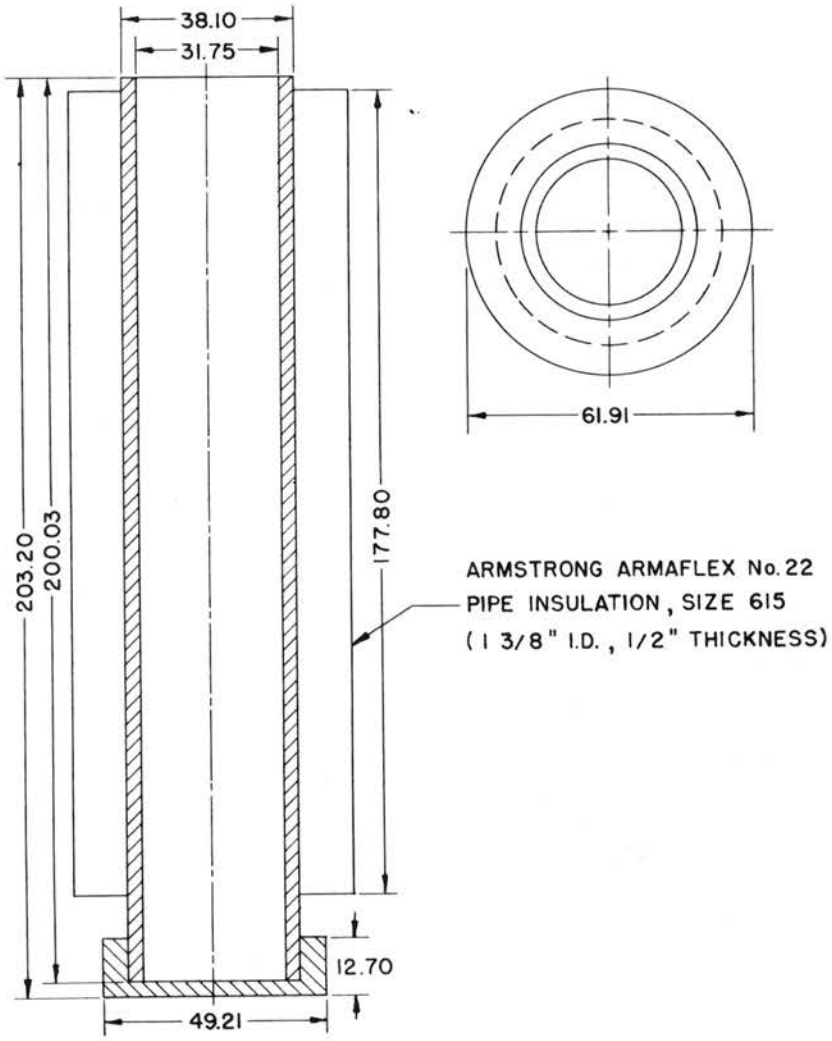

FIG. 3 Cooling Block

Appendix D

Designation: D 93 - 73 IP Designation: 34/71

AMERICAN SOCIETY FOR TESTING AND MATERIALS
1916 Race St., Philadelphia, Pa., 19103
Reprinted from the Annual Book of ASTM Standards, Copyright ASTM
If not listed in the current combined Index, will appear in the next edition

American National Standard Z11.7
American National Standards Institute
Method 1102—Federal Test
Method Standard No. 791b
Federation of Societies for
Paint Technology Standard No. Dt-5-66
British Standard 2839

Standard Method of Test for FLASH POINT BY PENSKY-MARTENS CLOSED TESTER[1]

ADOPTED (as method GO-7), 1924; LAST REVISED, 1971

This Standard of the American Society for Testing and Materials is issued under the fixed designation D 93; the number immediately following the designation indicates the year of original adoption or, in the case of revision, the year of last revision. A number in parentheses indicates the year of last reapproval. This is also a standard of the Institute of Petroleum issued under the fixed designation IP 34. The final number indicates the year of last revision.

This method was adopted as a joint ASTM-IP Standard in 1967.

1. Scope

1.1 This method covers the determination of the flash point by Pensky-Martens Closed Cup Tester of fuel oils, lube oils, suspensions of solids, liquids that tend to form a surface film under test conditions, and other liquids. For the determination of the flash point of drying oils and solvent-type waxes refer to Note 1.

NOTE 1—The flash point of drying oils may be determined using Method D 1393 and the flash point of solvent-type liquid waxes may be determined using Method D 1437.

NOTE 2—This method may be employed for the detection of contamination of lubricating oils by minor amounts of volatile materials.

2. Applicable Documents

2.1 *ASTM Standards:*

D 56 Test for Flash Point by Tag Closed Tester[2]

D 1310 Test for Flash Point of Liquids by Tag Open-Cup Apparatus[3]

D 1393 Test for Flash Point of Drying Oils[2]

D 1437 Test for Flash Point of Solvent-Type Liquid Waxes[4]

E 1 Specification for ASTM Thermometers[5]

3. Summary of Method

3.1 The sample is heated at a slow, constant rate with continual stirring. A small flame is directed into the cup at regular intervals with simultaneous interruption of stirring. The flash point is the lowest temperature at which application of the test flame causes the vapor above the sample to ignite.

4. Apparatus

4.1 *Pensky-Martens Closed Flash Tester*, as described in Appendix A1.

NOTE 3—There are automatic flash point testers available and in use which may be advantageous in the saving of testing time, permit the use of smaller samples, and have other factors which may merit their use. If automatic testers are used, the user must be sure that all of the manufacturer's instructions for calibrating, adjusting, and operating the instrument are followed. In any cases of dispute, the flash point as determined manually shall be considered the referee test.

4.2 *Thermometers*—Two standard thermometers shall be used with the ASTM Pensky-Martens tester, as follows:

4.2.1 For tests in which the indicated reading falls within the limits 20 to 200 F (−7 to +93 C), inclusive, an ASTM Pensky-Martens Low Range or Tag Closed Tester Thermometer having a range from 20 to 230 F (−5 to +110 C) and conforming to the requirements for Thermometers 9F (9C) and as prescribed in ASTM Specification E 1 or IP Thermometer 15F (15C) conforming to specifications given in Appendix A3, shall be used.

3.2.2 For tests in which the indicated reading falls within the limits 230 to 700 F (110 to 371 C), an ASTM Pensky-Martens High

[1] This method is under the jurisdiction of ASTM Committee D-2 on Petroleum Products and Lubricants.

Current edition approved Aug. 27, 1973. Published October 1973. Originally published as D 93 - 21 T. Last previous edition D 93 - 72.

In the IP, this method is under the jurisdiction of the Standardization Committee.

In 1971 the scope was revised.

[2] *Annual Book of ASTM Standards*, Part 20.

[3] *Annual Book of ASTM Standards*, Part 11.

[4] *Annual Book of ASTM Standards*, Part 22.

[5] *Annual Book of ASTM Standards*, Parts 18 and 30.

Range Thermometer having a range from 200 to 700 F (90 to 370 C) and conforming to the requirements for Thermometers 10F (10C) as prescribed in Specification E 1 or IP Thermometer 16F (16C) conforming to specifications given in Appendix A3, shall be used.

4.2.3 For the range 200 to 230 F (93 to 110 C) either thermometer may be used.

5. Preparation of Apparatus

5.1 Support the tester on a level, steady table. Unless tests are made in a draft-free room or compartment, it is good practice, but not required, to surround the tester on three sides with a shield, each section of which is about 18 in. (46 cm) wide and 24 in. (61 cm) high.

6. Preparation of Sample

6.1 Samples of very viscous materials may be warmed until they are reasonably fluid before they are tested. However, no sample should be heated more than is absolutely necessary. It shall never be heated above a temperature of 30 F (16 C) below its expected flash point.

6.2 Samples containing dissolved or free water may be dehydrated with calcium chloride or by filtering through a qualitative filter paper or a loose plug of dry absorbent cotton. Warming the sample is permitted, but it shall not be heated for prolonged periods or above a temperature of 30 F (16 C) below its expected flash point.

NOTE 4—If the sample is suspected of containing volatile contaminants, the treatment described in 6.1 and 6.2 should be omitted.

7. Procedure

7.1 Thoroughly clean and dry all parts of the cup and its accessories before starting the test, being sure to remove any solvent which had been used to clean the apparatus. Fill the cup with the sample to be tested to the level indicated by the filling mark. Place the lid on the cup and set the latter in the stove. Be sure to have the locating or locking device properly engaged. Insert the thermometer. Light the test flame and adjust it to $^{5}/_{32}$ in. (4 mm) in diameter. Supply the heat at such a rate that the temperature as indicated by the thermometer increases 9 to 11 F (5 to stirring in a downward direction.

7.2 If the sample is known to have a flash point of 220 (104 C) or below, apply the test flame when the temperature of the sample is from 30 F (17 C) to 50 F (28 C) below the expected flash point and thereafter at a temperature reading that is a multiple of 2 F (1 C). Apply the test flame by operating the mechanism on the cover which controls the shutter and test flame burner so that the flame is lowered into the vapor space of the cup in 0.5 s, left in its lowered position for 1 s, and quickly raised to its high position. Do not stir the sample while applying the test flame.

7.3 If the sample is known to have a flash point above 220 F (104 C) apply the test flame in the manner just described at each temperature that is a multiple of 5 F (3 C), beginning at a temperature of 30 F (17 C) to 50 F (28 C) below the expected flash point.

NOTE 5—When testing materials to determine if volatile contaminants are present, it is not necessary to adhere to the temperature limits for initial flame application as stated in 7.2 and 7.3.

7.4 Record as the flash point the temperature read on the thermometer at the time the test flame application causes a distinct flash in the interior of the cup. Do not confuse the true flash point with the bluish halo that sometimes surrounds the test flame at applications preceding the one that causes the actual flash.

DETERMINATION OF FLASH POINT OF SUSPENSIONS OF SOLIDS

8. Procedure

8.1 Bring the material to be tested and the tester to a temperature of 60 ± 10 F (15 ± 5 C) or 20 F (11 C) lower than the estimated flash point, whichever is lower. Completely fill the air space between the cup and the interior of the air bath with water at the temperature of the tester and sample. Turn the stirrer 250 ± 10 rpm, stirring in a downward direction. Raise the temperature throughout the duration of the test at a rate of not less than 2 nor more than 3 F (1 to 1.5 C)/min. With the exception of these requirements for rates of stirring and heating, proceed as prescribed in Section 7.

NOTE 6—Solid carbon dioxide (CO_2) (dry ice) shall in no case be used to obtain the proper rate of temperature rise, since CO_2 has a blanketing effect which leads to a false flash point.

9. Calculation and Report

9.1 Observe and record the barometric pressure at the time of the test. When the pressure differs from 760 mm Hg, correct the flash point by means of the following equations:

$$\text{Corrected flash point} = F + 0.06\,(760 - P)$$

or

$$\text{Corrected flash point} = C + 0.03\,(760 - P)$$

where:

F = observe flash point, deg F.
C = observe flash point, deg C.
P = barometric pressure, mm Hg.

9.2 Record the corrected flash point to the nearest 1 F or 0.5 C.

9.3 Report the recorded flash point as the Pensky-Martens Closed Cup Flash Point, ASTM D 93 - IP 34, of the sample tested.

10. Precision

10.1 The following criteria should be used for judging the acceptability of results (95 percent probability):

10.1.1 *Repeatability*—Duplicate results by the same operator should be considered suspect if they differ by more than the following amounts:

Material	Flash Point Range	Repeatability
Suspensions of solids	95 to 110 F (35 to 43.3 C)	4 F (2.0 C)
All others	220 F (104.4 C) and under	4 F (2.0 C)
	Above 220 F (104.4 C)	10 F (5.5 C)

10.1.2 *Reproducibility*—The results submitted by each of two laboratories should be considered suspect if the two results differ by more than the following amounts:

Material	Flash Point Range	Reproducibility
Suspensions of solids	95 to 110 F (35 to 43.3 C)	6 F (3.5 C)
All others	220 F (104.4 C) and under	6 F (3.5 C)
	Above 220 F (104.4 C)	15 F (8.5 C)

10.2 The following criteria should be used for judging the acceptability of results (95 percent confidence) obtained on viscous and/or heavily pigmented (paint or varnish) materials which tend to form a surface film:

10.2.1 *Repeatability*—The average of two tests by the same operator on the same day compared to two tests on another day should be considered suspect if they differ by more than 9 F (5 C).

10.2.2 *Reproducibility*—The average of two tests by an operator on the same day compared to the average of two tests by another operator (or another laboratory) on any one day should be considered suspect if they differ by more than 18 F (10.0 C).

10.2.3 The definition of Repeatability and Reproducibility given here represents different parameters of the variance of the method; those given in 10.1 are derived from standards of ASTM Committee D-2 and the Institute of Petroleum, while those in 10.2 are from ASTM Committee D-1.

APPENDIXES

A1. Apparatus Specifications

A1.1 A typical assembly of the apparatus, gas heated, is shown in Fig. A1. The apparatus shall consist of a test cup, cover, and stove conforming to the following requirements:

A1.1.1 *Cup*—The cup shall be of brass, or other nonrusting metal of equivalent heat conductivity, and shall conform to the dimensional requirements in Fig. A2. The flange shall be equipped with devices for locating the position of the cup in the stove. A handle attached to the flange of the cup is a desirable accessory. The handle shall not be so heavy as to tip over the empty cup.

A1.1.2 *Cover:*

A1.1.2.1 *Cover Proper*—The cover shown in Fig. A3 shall be of brass (A1.1.1.1), and shall have a rim projecting downward almost to the flange of the cup. The rim shall fit the outside of the cup with a clearance not exceeding 0.014 in. on the diameter. There shall be a locating or locking device, or both engaging with a corresponding device on the cup. The four openings in the cover, *A*, *B*, *C*, and *D*, are shown in Fig. A3. The upper edge of the cup shall be in close contact with the inner face of the cover throughout its circumference.

A1.1.2.2 *Shutter*—The cover shall be equipped with a brass (Section 3) shutter (Fig. A4), approximately $^{3}/_{32}$ in. thick, operating on the plane of the upper surface of the cover. The shutter shall be so shaped and mounted that it rotates on the axis of the horizontal center of the cover

between two stops, so placed, that when in one extreme position, the openings *A*, *B*, and *C* in the cover are completely closed, and when in the other extreme position, these openings are completely opened. The mechanism operating the shutter should be of the spring type and constructed so that when at rest the shutter shall exactly close the three openings. When operated to the other extreme, the three cover openings shall be exactly open and the tip of the exposure tube shall be fully depressed.

A1.1.2.3 *Flame-Exposure Device*—The flame-exposure device (Fig. A4) shall have a tip with an opening 0.027 to 0.031 in. in diameter. This tip shall be made preferably of stainless steel, although it may be fabricated of other suitable metals. The flame-exposure device shall be equipped with an operating mechanism which, when the shutter is in the "open" position, depresses the tip so that the center of the orifice is between the planes of the under and upper surfaces of the cover proper at a point on a radius passing through the center of the larger opening A (Fig. A3).

A1.1.2.4 *Pilot Flame*—A pilot flame shall be provided for automatic relighting of the exposure flame. A bead $^{5}/_{32}$ in. in diameter may be mounted on the cover so that the size of the test flame can be regulated by comparison. The tip of the pilot flame shall have an opening the same size as the tip of the flame exposure device (0.027 to 0.031 in. in diameter).

A1.1.2.5 *Stirring Device*—The cover shall be equipped with a stirring device (Fig. A4) mounted in the center of the cover and carrying two 2-bladed metal propellers. A stirrer shaft may be coupled to the motor by a flexible shaft or a suitable arrangement of pulleys.

A1.1.3 *Stove*—Heat shall be supplied to the cup by means of a properly designed stove which is equivalent to an air bath. The stove shall consist of an air bath and a top plate on which the flange of the cup rests.

A1.1.3.1 *Air Bath*—The air bath shall have a cylindrical interior and shall conform to the dimensional requirements in Fig. A1. The air bath may be either a flame or electrically heated metal casting (Note A1), or an electric-resistance element (Note A2). In either case, the air bath must be suitable for use at the temperatures to which it will be subjected without deformation.

NOTE A1—If the heating element is a flame or electrically heated metal casting, it shall be so designed and used that the temperatures of the bottom and the walls are approximately the same. On this account it should be not less than $^{1}/_{4}$ in. in thickness. The casting shall be designed so that products of combustion of the flame cannot pass up and come into contact with the cup.

NOTE A2—If the air bath is of the electric-resistance heated type, it shall be constructed so that all parts of the interior surface are heated uniformly. The wall and bottom of the air bath shall be not less than $^{1}/_{4}$ in. in thickness.

A1.1.3.2 *Top Plate*—The top plate shall be of metal, and shall be mounted with an air gap between it and the air bath. It may be attached to the air bath by means of three screws and spacing bushings. The bushings should be of proper thickness to define an air gap of $^{3}/_{16}$ in., and they shall be not more than $^{3}/_{8}$ in. in diameter.

A2. Manufacturing Standardization of Thermometer and Ferrule

A2.1 The low-range thermometer, which conforms also to the specification for the cup thermometer in the Tag closed tester (Method D 56) and which frequently is fitted with a metal ferrule intended to fit the collar on the cover of the Tag flash tester, can be supplemented by an adapter (Fig. A5) to be used in the larger diameter collar of the Pensky-Martens apparatus. Differences in dimensions of these collars, which do not affect test results, are a source of unnecessary trouble to manufacturers and suppliers of instruments, as well as to users.

A2.2 Subcommittee 21 on Metalware Laboratory Apparatus, of ASTM Committee E-1 on Methods of Testing, has studied this problem and has established some dimensional requirements which are shown in Fig. A5. Conformity to these requirements is not mandatory, but is desirable to users as well as suppliers of Pensky-Martens Testers.

A3. THERMOMETER SPECIFICATIONS

TABLE A1 IP Thermometer Specifications

NOTE—The stem shall be made with an enlargement having a diameter of 1.5 to 2.0 mm greater than the stem and a length of 3 to 5 mm, the bottom of the enlargement being 64 to 66 mm from the bottom of the bulb. These dimensions shall be measured with the test gage shown in Fig. 1 of Specification E 1.[8]

Name	IP 15F	IP 15C	IP 16F	IP 16C
	Pensky-Martens Low		Pensky-Martens High	
Range	20 to 230 F	−7 to +110 C	200 to 700 F	90 to 370 C
Graduation	1 F	0.5 C	5 F	2 C
Immersion, mm	57	57	57	57
Over-all length ±10 mm	280	280	280	280
Stem diameter, mm	5.5 to 8.0	5.5 to 8.0	5.5 to 8.0	5.5 to 8.0
Bulb shape	cylindrical	cylindrical	cylindrical	cylindrical
Bulb length, mm	9 to 13	9 to 13	10 max	10 max
Bulb diameter, mm	not less than 5.5 and not greater than stem	not less than 5.5 and not greater than stem	not less than 5.5 and not greater than stem	not less than 5.5 and not greater than stem
Length of graduated portion, mm	143 to 177	143 to 177	143 to 177	143 to 177
Distance bottom of bulb to, mm	20 F 75 to 90	−7 C 75 to 90	200 F 75 to 90	90 C 75 to 90
Longer lines at each	5 F	1 C and 5 C	25 F	10 and 20 C
Figured at each	10 F	5 C	50 F	20 C
Expansion chamber	Required	Required	Required	Required
Top finish	Ring	Ring	Ring	Ring
Scale error not to exceed ±	1 F	0.5 C	2.5 to 500 C 3.5 F above 500 F	1 to 260 C 2 C above 260 C
See notes	1 and see table for emergent stem temperatures	1 and see table for emergent stem temperatures	1 and see table for emergent stem temperatures	1 and see table for emergent stem temperatures

TABLE A3 Standardization Temperatures

NOTE—The emergent column temperatures are those attained when using the thermometers in the test equipment for which the thermometers were originally designed. In some cases these temperatures are markedly different from those realized during standardization.

Temperature	Average Temperature of Emergent Column	Temperature	Average Temperature of Emergent Column
Thermometer 9F (20 to 230 F)		Thermometer 9C (−5 to +100 C)	
32 F	66 F	0 C	19 C
100 F	86 F	35 C	28 C
160 F	106 F	70 C	40 C
220 F	123 F	105 C	50 C
IP 15F (20 to 230 F)		IP 15C (−7 to 110 C)	
32 F	66 F	0 C	19 C
70 F	70 F	20 C	20 C
100 F	86 F	40 C	31 C
150 F	104 F	70 C	40 C
212 F	118 F	100 C	48 C

Temperature	Average Temperature of Emergent Column	Temperature	Average Temperature of Emergent Column
Thermometer 10F (200 to 700 F)		Thermometer 10C (90 to 370 C)	
212 F	141 F	100 C	61 C
390 F	159 F	200 C	71 C
570 F	180 F	300 C	87 C
700 F	220 F	370 C	104 C
IP 16F (20 to 700 F)		IP 16C (90 to 370 C)	
200 F	140 F	100 C	61 C
300 F	149 F	150 C	65 C
400 F	160 F	200 C	71 C
500 F	175 F	250 C	78 C
600 F	195 F	300 C	87 C
700 F	220 F	350 C	99 C

(Table A2 on next page)

TABLE A2 Specifications for ASTM Thermometers
All dimensions are in millimeters.
See Table A3 for Standardization Temperatures.

ASTM No. and Name	Range	For Test at	Immersion	Graduations			Scale Error max	Special Inscription	Expansion Chamber
				Subdivisions	Long Lines at Each	Number at Each			Permit Heating to
9C – 62 Pensky-Martens, Low Range Tag Closed Tester	−5 to +110 C		57	0.5 C	1 C	5 C	0.5 C	ASTM 9C or 9F 57 MM IMM	160 C
9F – 62	20 to 230 F			1 F	5 F	10 F	1 F		320 F
10C – 62 Pensky-Martens, High Range	90 to 370 C		57	2 C	10 C	20 C	[a]	ASTM 10C or 10F 57 MM IMM	
10F – 62	200 to 700 F			5 F	25 F	50 F	[b]		

[a] Scale error: 1 C up to 260 C; 2 C over 260 C.
[b] Scale error: 2.5 F up to 500 F; 3.5 F over 500 F.
[c] An expansion chamber is provided for relief of gas pressure to avoid distortion of the bulb at higher temperatures. It is not for the purpose of joining mercury separations; and under no circumstances should the thermometer be heated above the highest temperature reading.

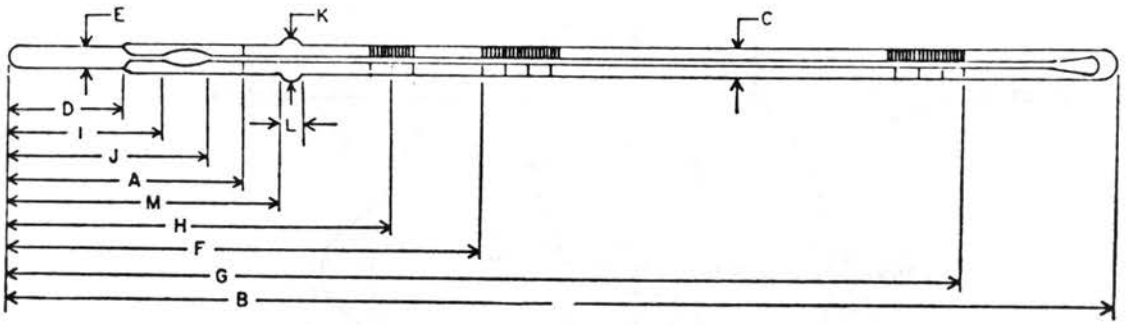

Total Length, ±5	Stem OD	Bulb		Scale Location				Ice Point Scale		Contraction Chamber		Stem Enlargement		
		Length	OD	Bottom of Bulb to Line at	Distance	Bottom of Bulb to Line at	Distance	Range	Bottomof Bulb to Ice Point	Distance to Bottom, min	Distance to Top, max	OD	Length	Distance to Bottom
B	C	D	E		F		G	H		I	J	K	L	M
				0 C		100 C								
287	6.0 to 7.0	9.0 to 13	≯ stem		85 to 98		221 to 237					7.5 to 8.5	2.5 to 5.0[d]	64 to 66
				32 F		212 F								
				110 C		360 C								
287	6.0 to 7.0	8.0 to 10	4.5 to 6.0		86 to 99		227 to 245					7.5 to 8.5	2.5 to 5.0[d]	64 to 66
				230 F		680 F								

[d] The length of the enlargement, and the distance from the bottom of the enlargement to the bottom of the bulb shall be measured with the test gage shown in Fig. A6.

KEY: Existing rules are printed in standard type face. Proposed additions to existing rules are printed in **boldface**, while proposed deletions from existing rules are printed within [single brackets]. Additions to proposed rules are **underlined and boldfaced**, while deletions from proposed rules are printed within [[double brackets]].

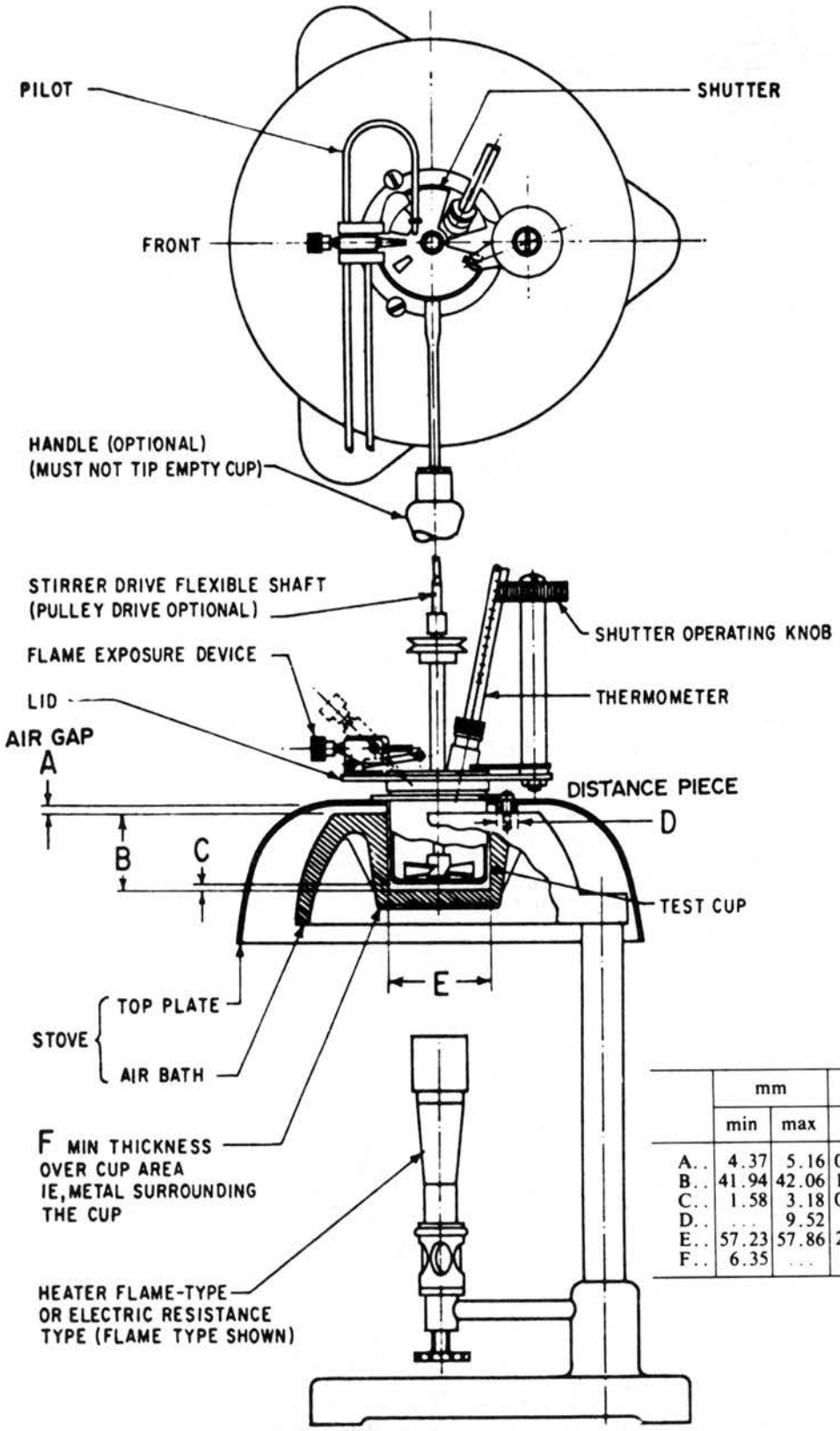

	mm		in.	
	min	max	min	max
A..	4.37	5.16	0.172	0.203
B..	41.94	42.06	1.651	1.656
C..	1.58	3.18	0.062	0.125
D..	...	9.52	...	0.375
E..	57.23	57.86	2.253	2.278
F..	6.35	...	0.25	...

NOTE—Lid assembly may be positioned either right or left-handed.

FIG. A1 Pensky-Martens Closed Flash Tester.

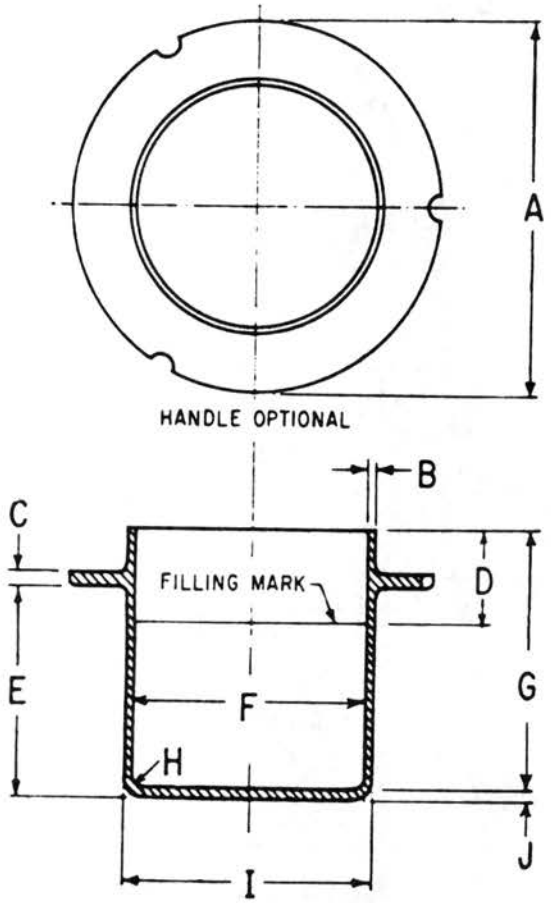

	mm		in.	
	min	max	min	max
A	79.0	79.8	3.11	3.14
B	1.0	...	0.04	...
C	2.8	3.6	0.11	0.14
D	21.72	21.84	0.855	0.860
E	45.47	45.72	1.790	1.800
F	50.72	50.85	1.997	2.002
G	55.75	56.00	2.195	2.205
H	3.8	4.0	0.15	0.16
I	53.90	54.02	2.122	2.127
J	2.29	2.54	0.090	0.100

FIG. A2 Test Cup.

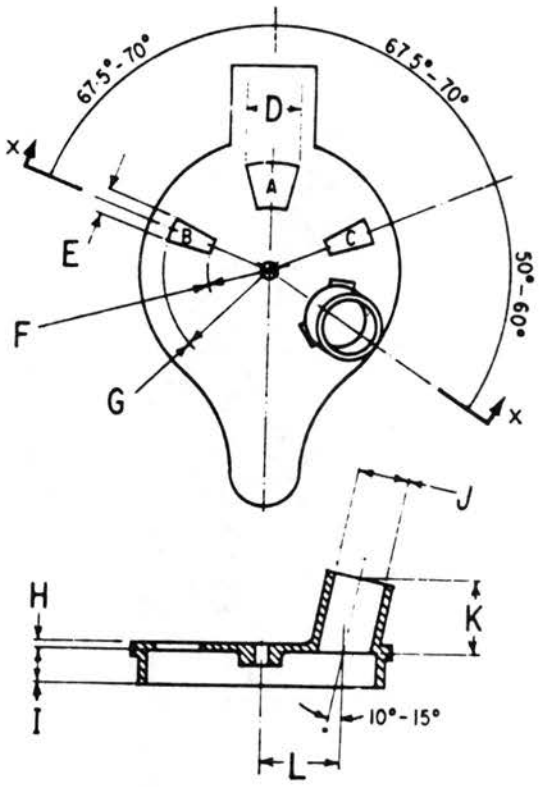

	mm		in.	
	min	max	min	max
D	12.7	13.5	0.50	0.53
E	4.8	5.6	0.19	0.22
F	13.5	14.3	0.53	0.56
G	23.8	24.6	0.94	0.97
H	1.2	2.0	0.05	0.08
I	7.9	...	0.31	...
J	12.27	12.32	0.483	0.485
K	16.38	16.64	0.645	0.655
L	18.65	19.45	0.734	0.766

FIG. A3 Cover Proper.

KEY: Existing rules are printed in standard type face. Proposed additions to existing rules are printed in **boldface**, while proposed deletions from existing rules are printed within [single brackets]. Additions to proposed rules are **underlined and boldfaced**, while deletions from proposed rules are printed within [[double brackets]].

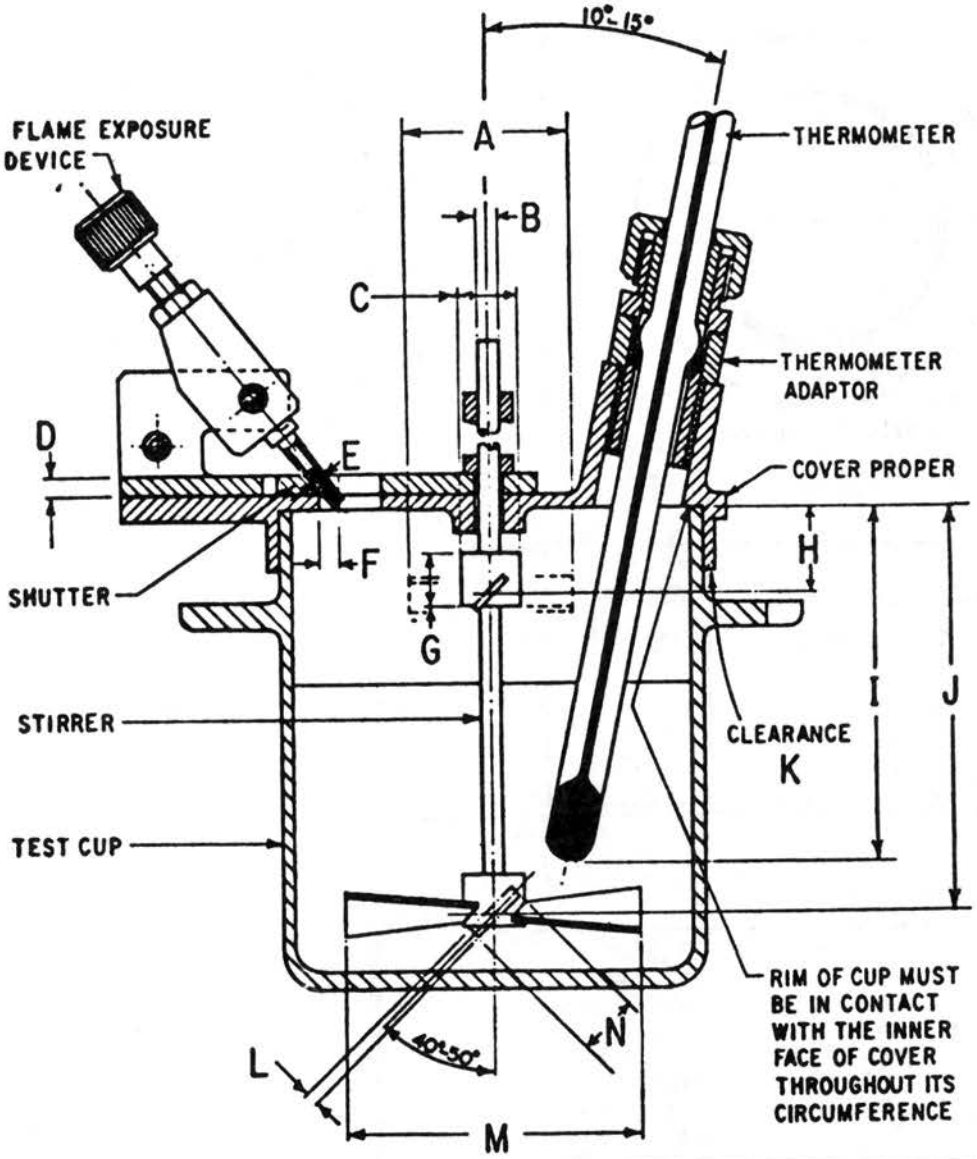

	mm		in.	
	min	max	min	max
A	18.3	19.8	0.72	0.78
B	2.38	3.18	0.094	0.125
C	7.6	8.4	0.30	0.33
D	2.0	2.8	0.08	0.11
E	0.69	0.79	0.027	0.031
F	2.0	2.8	0.08	0.11
G	6.4	10.4	0.25	0.41
H	9.6	11.2	0.38	0.44
I[a]	43.0	46.0	1.69	1.81
J	50.0	51.6	1.97	2.03
K	...	0.36	...	0.014
L	1.22	2.06	0.048	0.08
M	31.8	44.4	1.25	1.75
N	7.6	8.4	0.30	0.33

[a] Includes tolerance for length of thermometer given in ASTM Specification E 1,[5] ASTM Thermometers.

FIG. A4 Test Cup and Cover Assembly.

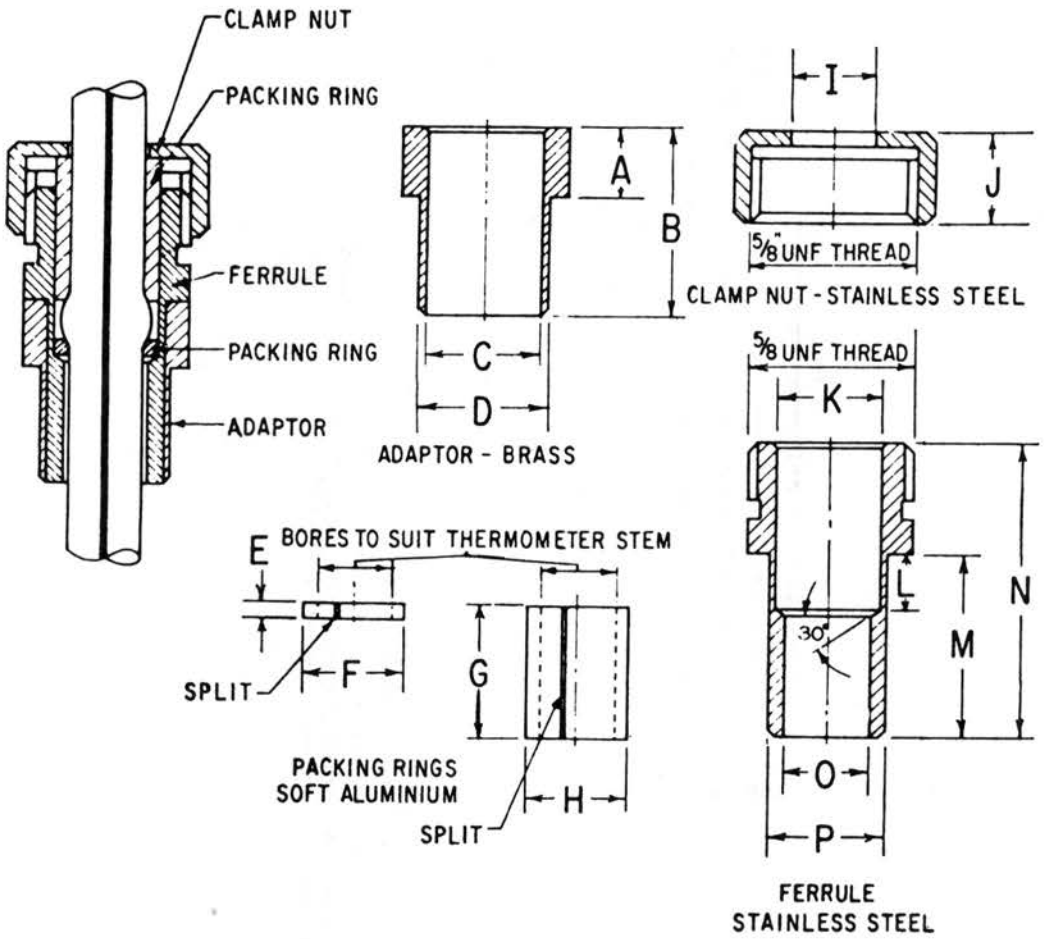

	mm		in.	
	min	max	in.	max
A	6.20	6.50	0.244	0.256
B	17.0	18.0	0.67	0.71
C	9.80	9.85	0.386	0.388
D	12.19	12.24	0.480	0.482
E	1.40	1.65	0.055	0.065
F	8.56	8.61	0.337	0.339
G	12.4	13.0	0.49	0.57
H	8.56	8.61	0.337	0.339
I	8.1	8.6	0.32	0.34
J	9.9	10.7	0.39	0.42
K	8.64	8.69	0.340	0.342
L	5.1	5.6	0.20	0.22
M	17.0	17.5	0.67	0.69
N	27.4	28.2	1.08	1.11
O	7.11	7.16	0.280	0.282
P	9.73	9.78	0.383	0.385

FIG. A5 Dimensions for Thermometer Adaptor, Ferrule, and Packing Ring.

KEY: Existing rules are printed in standard type face. Proposed additions to existing rules are printed in **boldface**, while proposed deletions from existing rules are printed within [single brackets]. Additions to proposed rules are **underlined and boldfaced**, while deletions from proposed rules are printed within [[double brackets]].

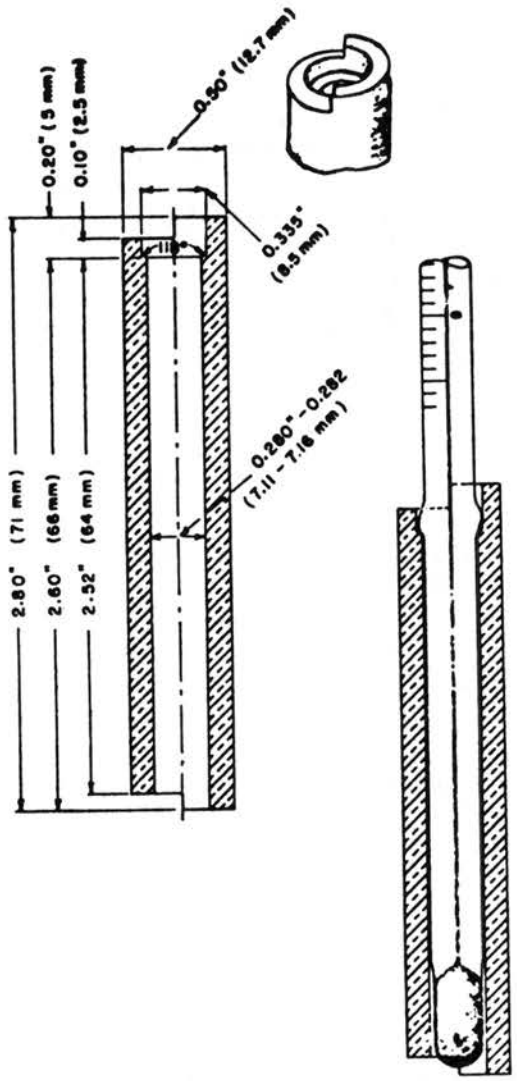

FIG. A6 Test Gage for Checking Enlargements on Thermometers.

By publication of this standard no position is taken with respect to the validity of any patent rights in connection therewith, and the American Society for Testing and Materials does not undertake to insure anyone utilizing the standard against liability for infringement of any Letters Patent nor assume any such liability.

Appendix E

AMERICAN SOCIETY FOR TESTING AND MATERIALS

1916 Race St., Philadelphia, Pa. 19103

Reprinted from the Annual Book of ASTM Standards Copyright ASTM

THIS

Standard Method for

CLASSIFICATION OF SOILS FOR ENGINEERING PURPOSES[1]

ASTM Designation: D 2487 – 69

This Standard of the American Society for Testing and Materials is issued under the fixed designation D 2487; the number immediately following the designation indicates the year of original adoption or, in the case of revision, the year of last revision. A number in parentheses indicates the year of last reapproval.

1. Scope

1.1 This method describes a system for classifying mineral and organo-mineral soils for engineering purposes based on laboratory determination of particle-size characteristics, liquid limit, and plasticity index, and shall be used when precise classification is required.

NOTE 1—This method provides qualitative data only. When quantitative information is required for detailed designs of important structures, this method must be supplemented by laboratory tests or other quantitative data to determine performance characteristics of the soil under expected field conditions.

NOTE 2—This method may also be used as an aid in training personnel in the use of ASTM Recommended Practice D 2488, for Description of Soils (Visual-Manual Procedure).[2]

2. Apparatus

2.1 *Apparatus for Preparation of Samples*—See Method D 421, for Dry Preparation of Soil Samples for Grain-Size Analysis and Determination of Soil Constants[2] or ASTM Method D 2217, for Wet Preparation of Soil Samples for Grain Size Analysis and Determination of Soil Constants.[2]

2.2 *Apparatus for Liquid Limit Test*—See ASTM Method D 423, Test for Liquid Limit of Soils.[2]

2.3 *Apparatus for Plastic Limit Test*—See ASTM Method D 424, Test for Plastic Limit and Plasticity Index of Soils.[2]

2.4 *Apparatus for Particle Size Analysis*—See 2. Apparatus, of ASTM Method D 422, for Grain-Size Analysis of Soils,[2] ASTM Method D 1140, Test for Amount of Materials in Soils Finer than the No. 200 Sieve,[2] and the classification chart (Fig. 1).

3. Sampling

3.1 Sampling shall be conducted in accordance with ASTM Method D 1452, for Soil Investigation and Sampling by Auger Borings,[2] ASTM Method D 1586, for Penetration Test and Split-Barrel Sampling of Soils,[2] ASTM Method D 1587, for Thin-Walled Tube Sampling of Soils,[2] or another standard accepted procedure.

[1] Under the standardization procedure of the Society, this method is under the jurisdiction of the ASTM Committee D-18 on Soil and Rock for Engineering Purposes. A list of members may be found in the ASTM Yearbook.

Current edition effective Nov. 14, 1969. Originally issued 1966. Replaces D 2487 – 66 T.

[2] *Annual Book of ASTM Standards*, Part 11.

3.2 The sample shall be carefully identified as to origin by a boring number and sample number in conjunction with a job number, a geologic stratum, a pedologic horizon or a location description with respect to a permanent monument, a grid system or a station number and offset with respect to a stated centerline.

3.3 The sample should also be described in accordance with ASTM Recommended Practice D 2488.

NOTE 3—A soil which is composed primarily of undecayed or partially decayed organic matter and has a fibrous texture, dark brown to black color, and organic odor should be designated as a *highly organic soil*, PT, and not subjected to the classification procedures described hereafter.

4. Test Sample

4.1 Test samples shall represent that portion of the field sample finer than the 3-in. (76-mm) sieve and shall be obtained as follows:

4.1.1 Air dry the field sample,

4.1.2 Weigh the field sample,

4.1.3 Separate the field sample into two fractions on a 3-in. (76-mm) sieve, and

4.1.4 Weigh the fraction retained on the 3-in. (76-mm) sieve. Compute the percentage of plus 3-in. (76-mm) material in the field sample, and note this percentage as auxiliary information.

4.1.5 Thoroughly mix the fraction passing the 3-in. (76-mm) sieve and select test samples.

5. Preliminary Classification Procedure

5.1 Procedure for the determination of percentage finer than the No. 200 sieve.

5.1.1 From the material passing the 3-in. (76-mm) sieve select a test sample and determine the percentage of the test sample finer than the No. 200 sieve in accordance with Method D 1140.

NOTE 4—Step 5.1.1 may be omitted if the soil can obviously be classified as fine-grained by visual inspection (see 5.3).

5.2 Classify the soil as *coarse-grained* if more than 50 per cent of the test sample is retained on the No. 200 sieve and follow 6, Procedure for Classification of Coarse-Grained Soils.

5.3 Classify the soil as *fine-grained* if 50 per cent or more of the test sample passes the No. 200 sieve and follow 7, Procedure for Classification of Fine-Grained Soils.

6. Procedure for Classification of Coarse-Grained Soils (More than 50 per cent retained on No. 200 Sieve).

6.1 Select test samples from the material passing the 3-in. (76-mm) sieve for the determination of particle-size characteristics, liquid limit, and plasticity index in accordance with ASTM Method D 421 or ASTM Method D 2217.

6.2 Determine the cumulative particle-size distribution of the fraction coarser than the No. 200 sieve in accordance with ASTM Method D 422.

6.3 Classify the sample as *gravel*, G, if 50 per cent or more of the coarse fraction (plus No. 200 sieve) is retained on the No. 4 sieve.

6.4 Classify the sample as *sand*, S, if more than 50 per cent of the coarse fraction (plus No. 200 sieve) passes the No. 4 sieve.

6.5 If less than 5 per cent of the test sample passed the No. 200 sieve as determined in 5.1.1, compute the coefficient of uniformity, C_u, and coefficient of curvature, C_z as given in Equations 1 and 2.

$$C_u = \frac{D_{60}}{D_{10}} \quad (1)$$

$$C_z = \frac{(D_{30})^2}{D_{10} \times D_{60}} \quad (2)$$

MAJOR DIVISIONS			GROUP SYMBOLS	TYPICAL NAMES
COARSE-GRAINED SOILS More than 50% retained on No. 200 sieve*	GRAVELS 50% or more of coarse fraction retained on No. 4 sieve	CLEAN GRAVELS	GW	Well-graded gravels and gravel-sand mixtures, little or no fines
			GP	Poorly graded gravels and gravel-sand mixtures, little or no fines
		GRAVELS WITH FINES	GM	Silty gravels, gravel-sand-silt mixtures
			GC	Clayey gravels, gravel-sand-clay mixtures
	SANDS More than 50% of coarse fraction passes No. 4 sieve	CLEAN SANDS	SW	Well-graded sands and gravelly sands, little or no fines
			SP	Poorly graded sands and gravelly sands, little or no fines
		SANDS WITH FINES	SM	Silty sands, sand-silt mixtures
			SC	Clayey sands, sand-clay mixtures
FINE-GRAINED SOILS 50% or more passes No. 200 sieve*	SILTS AND CLAYS Liquid limit 50% or less		ML	Inorganic silts, very fine sands, rock flour, silty or clayey fine sands
			CL	Inorganic clays of low to medium plasticity, gravelly clays, sandy clays, silty clays, lean clays
			OL	Organic silts and organic silty clays of low plasticity
	SILTS AND CLAYS Liquid limit greater than 50%		MH	Inorganic silts, micaceous or diatomaceous fine sands or silts, elastic silts
			CH	Inorganic clays of high plasticity, fat clays
			OH	Organic clays of medium to high plasticity
Highly Organic Soils			PT	Peat, muck and other highly organic soils

* Based on the material passing the 3-in. (76-mm) sieve.

FIG. 1—Soil Classification Chart.

CLASSIFICATION CRITERIA		
Classification on basis of percentage of fines Less than 5% Pass No. 200 sieve GW, GP, SW, SP More than 12% Pass No. 200 sieve GM, GC, SM, SC 5% to 12% Pass No. 200 sieve Borderline Classification requiring use of dual symbols	$C_u = D_{60}/D_{10}$ Greater than 4 $C_z = \frac{(D_{30})^2}{D_{10} \times D_{60}}$ Between 1 and 3	
	Not meeting both criteria for GW	
	Atterberg limits plot below "A" line or plasticity index less than 4	Atterberg limits plotting in hatched area are borderline classifications requiring use of dual symbols
	Atterberg limits plot above "A" line and plasticity index greater than 7	
	$C_u = D_{60}/D_{10}$ Greater than 6 $C_z = \frac{(D_{30})^2}{D_{10} \times D_{60}}$ Between 1 and 3	
	Not meeting both criteria for SW	
	Atterberg limits plot below "A" line or plasticity index less than 4	Atterberg limits plotting in hatched area are borderline classifications requiring use of dual symbols
	Atterberg limits plot above "A" line and plasticity index greater than 7	

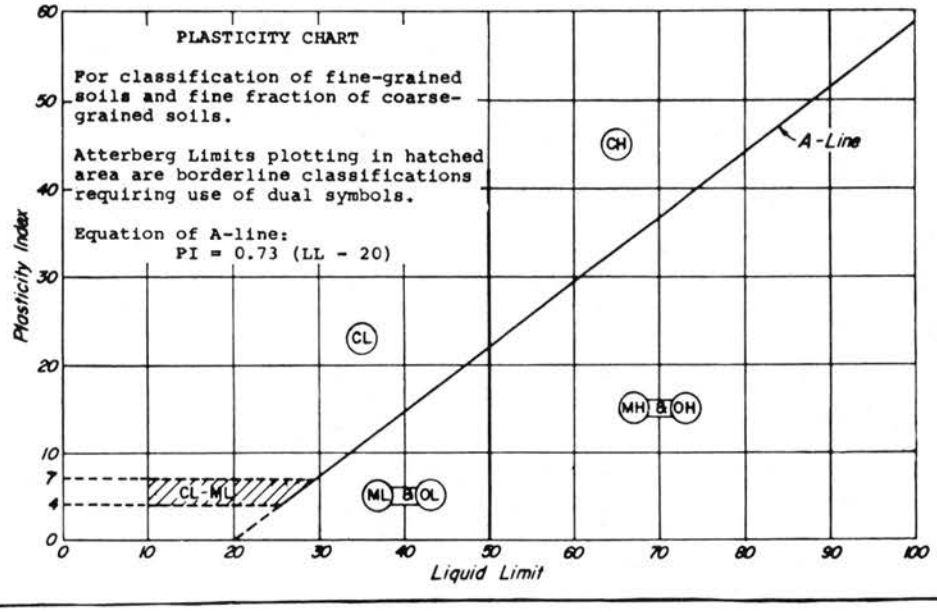

Visual-Manual Identification, See ASTM Designation D 2488.

FIG. 1—*Continued.*

in which D_{10}, D_{30}, and D_{60} are the particle-size diameters corresponding respectively to 10, 30, and 60 per cent passing on the cumulative particle-size distribution curve.

6.5.1 Classify the sample as *well-graded gravel*, GW or *well-graded sand*, SW, if C_u is greater than 4 for gravel and 6 for sand, and C_z is between 1 and 3.

6.5.2 Classify the sample as *poorly graded gravel*, GP, or *poorly graded sand*, SP, if either the C_u or the C_z criteria for well-graded soils are not satisfied.

6.6 If more than 12 per cent of the test sample passed the No. 200 sieve as determined in 5.1.1 determine the liquid limit and the plasticity index of a portion of the test sample passing the No. 40 sieve in accordance with ASTM Method D 423 and ASTM Method D 424.

6.6.1 Classify the sample as *silty gravel*, GM, or *silty sand*, SM if the results of the limits tests show that the fines are silty, that is, the plot of the liquid limit versus plasticity index falls below the "A" line (see Plasticity Chart, Fig. 1) or the plasticity index is less than 4.

6.6.2 Classify the sample as *clayey gravel*, GC, or *clayey sand*, SC, if the fines are clayey, that is, the plot of liquid limit versus plasticity index falls above the "A" line and the plasticity index is greater than 7.

6.6.3 If the fines are intermediate between silt and clay, that is, the plot of liquid limit versus plasticity index falls on or practically on the "A" line or falls above the "A" line but the plasticity index is in the range of 4 to 7, the soil should be given a borderline classification, such as GM-GC or SM-SC.

6.7 If 5 to 12 per cent of the test sample passed the No. 200 sieve, the soil should be given a borderline classification based on both its gradation and limit test characteristics, (see 6.6) such as GW-GC or SP-SM.

NOTE 5—In doubtful cases, the rule is to favor the less plastic classification. Example: a gravel with 10 per cent fines, a C_u of 20, a C_z of 2.0, and a plasticity index of 6 would be classified as GW-GM rather than GW-GC.

7. Procedure for Classification of Fine-Grained Soils (50 per cent or more passing No. 200 sieve)

7.1 From the material passing the 3-in. (76-mm) sieve, select a test sample for the determination of the liquid limit and plasticity index in accordance with ASTM Method D 421 or ASTM Method D 2217.

NOTE 6—It is recommended that the method for wet preparation be used for soils containing organic matter or irreversible mineral colloids.

7.2 Determine the liquid limit and the plasticity index of a portion of the test sample passing the No. 40 sieve in accordance with ASTM Method D 423, and ASTM Method D424.

7.3 Classify the soil as *inorganic clay*, C, if the plot of liquid limit versus plasticity index falls above the "A" line and the plasticity index is greater than 7.

7.3.1 Classify the soil as *inorganic clay of low to medium plasticity*, CL, if the liquid limit is less than 50 and the plot of liquid limit versus plasticity index falls above the "A"-line and the plasticity index is greater than 7. See area identified as CL on the Plasticity Chart, Fig. 1.

7.3.2 Classify the soil as *inorganic clay of high plasticity*, CH, if the liquid limit is greater than 50 and the plot of liquid limit versus plasticity index falls above the "A"-line. See area identified as CH on the Plasticity Chart, Fig. 1.

NOTE 7—In cases where the liquid limit exceeds 100 or the plasticity index exceeds 60, the plasticity chart may be expanded by maintaining the same scales on both axes and extending the A-line at the indicated slope.

7.4 Classify the soil as *inorganic silt*, M, if the plot of liquid limit versus plas-

ticity index falls below the "A" line or if the plasticity index is less than 4, unless it is suspected that organic matter is present in sufficient amounts to influence the soil properties, then tentatively classify the soil as *organic silt or clay*, O.

7.4.1 If the soil has a dark color and an organic odor when moist and warm, a second liquid limit test should be performed on a test sample which has been oven-dried at 110 ± 5 deg C for 24 hr.

7.4.2 Classify the soil as *organic silt or clay*, O, if the liquid limit after oven drying is less than three-fourths of the liquid limit of the original sample determined before drying. (See ASTM Designation D 2217, Procedure B).

7.4.3 Classify the soil as *inorganic silt of low plasticity*, ML, or as *organic silt or silt-clay of low plasticity*, OL, if the liquid limit is less than 50 and the plot of liquid limit versus plasticity index falls below the "A"-line or the plasticity index is less than 4. See area identified as ML and OL on the Plasticity Chart, Fig. 1.

7.4.4 Classify the soil as *inorganic silt of medium to high plasticity*, MH, or as *organic clay or silt-clay of medium to high plasticity*, OH, if the liquid limit is more than 50 and the plot of liquid limit versus plasticity index falls below the "A"-line. See area identified as MH and OH on the Plasticity Chart, Fig. 1.

7.5 In order to indicate their borderline characteristics, some fine-grained soils should be classified by dual symbols.

7.5.1 If the plot of liquid limit versus plasticity index falls on or practically on the "A" line or above the "A" line where the plasticity index is in the range of 4 to 7, the soil should be given an appropriate borderline classification such as CL-ML or CH-OH.

7.5.2 If the plot of liquid limit versus plasticity index falls on or practically on the line liquid limit = 50, the soil should be given an appropriate borderline classification such as CL-CH or ML-MH.

NOTE 8—In doubtful cases, the rule for classification is to favor the more plastic classification. Example: a fine-grained soil with a liquid limit of 50 and a plasticity index of 22 would be classified as CH-MH rather than CL-ML.

Appendix F

AMERICAN SOCIETY FOR TESTING AND MATERIALS

1916 Race St., Philadelphia, Pa. 19103

Reprinted from the Annual Book of ASTM Standards Copyright ASTM

Recommended Practice for

THIS

DESCRIPTION OF SOILS[1] (VISUAL-MANUAL PROCEDURE)

ASTM Designation: D 2488 – 69

This Recommended Practice of the American Society for Testing and Materials is issued under the fixed designation D 2488; the number immediately following the designation indicates the year of original adoption or, in the case of revision, the year of last revision. A number in parentheses indicates the year of last reapproval.

1. Scope

1.1 This recommended practice describes a procedure for the identification and description of soils for engineering purposes based on visual examination and simple manual tests.

NOTE 1—It does not conflict with other methods of soil identification or classification and in fact the user is encouraged to supplement the descriptions recommended herein with geologic, pedologic or local terms of description. On the other hand, when precise classification of soils for engineering purposes are required ASTM Method D 2487, for Classification of Soils for Engineering Purposes,[2] should be employed.

1.2 This recommended practice is intended to be used not only for identification of soils in the field but also in the office or in the laboratory or wherever soil samples are inspected and described.

1.2.1 The practice has particular value in grouping similar soil samples so that only a minimum number of laboratory tests need be run for positive soil classification.

NOTE 2—The ability to identify soils correctly is learned more readily under the guidance of experienced personnel, but it may also be acquired systematically by comparing numerical laboratory test results for typical soils of each type with their visual and manual characteristics while performing the identification procedures.

2. Definitions and Description of Terms

2.1 The definitions of the soil components, boulders, cobbles, gravel, sand fines (silt and clay), organic soil, and peat are in accordance with ASTM Definitions D 653, Terms and Symbols Relating to Soil Mechanics.[2]

3. Equipment

3.1 *Required Equipment:*

3.1.1 Small supply of water and

3.1.2 Pocket knife or small spatula.

3.2 *Useful Auxiliary Equipment:*

3.2.1 Small bottle of dilute hydrochloric acid,

3.2.2 Small test tube and stopper,

3.2.3 Munsell Soil Color Chart or Rock Color Chart,

---

[1] Under the standardization procedure of the Society, this recommended practice is under the jurisdiction of the ASTM Committee D-18 on Soil and Rock for Engineering Purposes. A list of members may be found in the ASTM Year Book.

Current edition effective Dec. 19, 1969. Originally issued 1966. Replaces D 2488 – 66 T.

[2] *Annual Book of ASTM Standards,* Part 11.

3.2.4 Small hand lens, and

3.2.5 Pocket penetrometer or shear gauge.

4. Sampling

4.1 The sample shall be considered to be representative of the stratum from which it was obtained by an appropriate accepted or standard procedure.

NOTE 3—Preferably the sampling procedure should be identified as having been conducted in accordance with ASTM Method D 1452, for Soil Investigation and Sampling by Auger Borings,[2] ASTM Method D 1586, for Penetration Test and Split-Barrel Sampling of Soils,[2] ASTM Method D 1587 for Thin-Walled Tube Sampling of Soils,[2] etc.

4.2 The sample shall be carefully identified as to origin.

NOTE 4—The sample identification may take the form of a boring number and sample number in conjunction with a job number, a geologic stratum, a pedologic horizon or a location description with respect to a permanent monument, a grid system or a station number and offset with respect to a stated centerline.

5. General Procedure for Identification

5.1 On the basis of an examination of the characteristics of the particles which make up a soil sample it is possible to assign it to one of three primary groups. Although most soils have components representative of two or more groups it is usually possible to discern the most important component and assign the sample to that group. A most important distinction is made on the basis of size. Individual particles visible to the naked eye make up the *coarse* fraction and those too small to be seen individually make up the *fine* fraction or the *fines*. The *organic* component of soils may consist of undecayed or partially decayed twigs, leaves, needles, stems, roots, etc. which impart a woody or fibrous texture to the soil or it may also be so finely divided that it can only be identified by its dark brown, dark gray or black color and distinctive organic odor.

5.1.1 *Coarse-grained soils* are those in which more than half (by weight) of the particles are visible to the naked eye. In making this estimate, particles coarser than 3 in. (76 mm) in diameter should be excluded. However, where such very coarse particles can be observed in surface soils or in exposure in the walls of test pits an estimate of the percentage of a large volume of soil which is occupied by cobbles and boulders should be made. This percentage should be recorded independently of the description of the material smaller than 3 in. (76 mm) in diameter.

5.1.2 *Fine-grained soils* are those in which more than half (by weight) of the particles are so fine that they cannot be seen by the naked eye. They are partly subdivided on the basis of simple manual tests. They are also subidivded as *inorganic* or *organic* on the basis of the presence or absence of a significant quantity of organic matter. Inorganic soils are usually characterized by their bright or light colors.

5.1.3 *Organic soils* are those which contain significant quantities of organic matter. *Highly organic soils* can readily be recognized by the presence of decayed roots, leaves, grasses and other fibrous vegetable matter in various stages of decay. When moist, they have a dark brown, very dark gray or black color and a soft spongy feel. If the samples are fresh, a distinctive odor of rotting organic matter can usually be noted. Many soils are only *partly organic* and are in fact composed predominantly of inorganic material. Such soils, however, behave differently from typical inorganic soils and the presence of relatively small amounts of organic matter should be noted wherever possible. Any soil which has a dark brown, dark gray or black color probably contains some finely divided organic material. The identification as an organic soil can usually be

completed by carefully noting the organic odor of fresh samples. If the sample is dry it should be moistened and warmed in the hand which may help to bring out the distinctive odor.

5.1.4 *Mixed-grained soils* are those inorganic or partly organic soils which contain materials representative of both the coarse and fine soil fractions. A high percentage of natural soils are mixed-grained. In many of these, however, one fraction predominates to such an extent that for practical purposes the soil may be identified as that fraction and the presence of the other noted as an appropriate fraction. As nearly as possible, the relative proportion of coarse and fine fraction should be estimated for all mixed-grained soils.

5.2 *Color* is an important property in identifying organic soils and within a given locality it may also be useful in identifying materials of similar geologic origin. Although qualitative color names are somewhat helpful, positive color identifications obtained by comparison with a standard color chart are even more useful. If the sample contains layers or patches of varying colors, this should be noted and all representative colors should be described. If possible, color should be described for moist samples.

NOTE 5—Charts especially prepared for describing the colors of soil and rock are available respectively. Such charts give typical descriptive names for the color chips and the correct Munsell color notation in terms of hue, value and chroma. Example: *Pink* (Moderate orange pink), *5 YR 8/4.*

5.3 Soils containing a significant amount of organic material usually have a distinctive odor of decaying vegetation This is especially apparent in fresh samples, but if the samples are dried the odor may often be revived by heating a moistened sample. If the soil is dark colored, the odor should be described as *organic*, *earthy*, or *none.*

5.4 Whenever intact samples are described an estimate of the *moisture condition* should be noted. *Dry* materials require the addition of considerable moisture to attain optimum for compaction. *Moist* materials are near the optimum moisture content. *Wet* soils require drying to attain optimum moisture content and *saturated* (very wet) soils come from below the water table.

TABLE 1—IDENTIFICATION OF CONSISTENCY OF FINE-GRAINED SOILS FROM MANUAL TESTS.

Consistency	Identification Procedure	Shear Strength, tons/ft² or kg/cm²
Soft	Easily penetrated several inches by thumb	Less than 0.25
Firm (medium)	Penetrated several inches by thumb with moderate effort	0.25 to 0.50
Stiff	Readily indented by thumb, but penetrated only with great effort	0.50 to 1.00
Very stiff	Readily indented by thumb nail	1.00 to 2.00
Hard	Indented with difficulty by thumbnail	over 2.00

5.5 The *structural* characteristics of intact soil samples provide important clues to their performance as foundation materials. Whenever such samples are available or when the soil profile may be inspected during sampling from a pit, the structural characteristics should be described. *Stratified* materials consist of alternating layers of varying types (or color). If the layers are less than about $\frac{1}{4}$ in. (6 mm) thick, it may be described as *laminated* (or *varved*, if mostly fine-grained). *Fissured* materials break along definite planes of fracture with little

resistance to fracturing. If the fracture planes appear polished or glossy, they should be described as *slickensided*. If a cohesive soil can be easily broken into small angular lumps which resist further breakdown, the structure may be described as *blocky*. A *lensed* structure is indicated by the inclusion of small pockets of different texture, such as small lenses of sand scattered through a mass of clay. The presence of special structural characteristics such as *root holes*, or *porous* openings should also be noted. If no structural characteristics are apparent, the soil may be described as *nonstratified* or *homogeneous*.

5.6 Some soils show definite evidence of *cementation* in the intact state. Where this is noted, the degree of cementation may be described as *weak* or *strong*. Since calcium carbonate is the most common cementing agent a report of its presence on the basis of the reaction with dilute hydrochloric acid is important. The intensity of the HCl reaction should be described as *none*, *weak*, or *strong*.

5.7 The degree of compactness or natural density of cohesionless soils and the consistency of cohesive soils are also important in foundation problems. Whenever undisturbed materials are examined either in field pits or from sealed samples, estimates of these properties should be noted. Usually the process of sampling disturbs cohesionless soils to such an extent that the natural density may only be determined in place. In *dense* cohesionless soil it is difficult to drive a 2 by 2 in. (5 by 5 cm) wooden stake more than a few inches; however, such a stake can easily be driven into *loose* material. Obviously, this simple method cannot be used to determine the relative density of *cemented* soils.

5.7.1 The consistency of cohesive soils may be determined in place or on

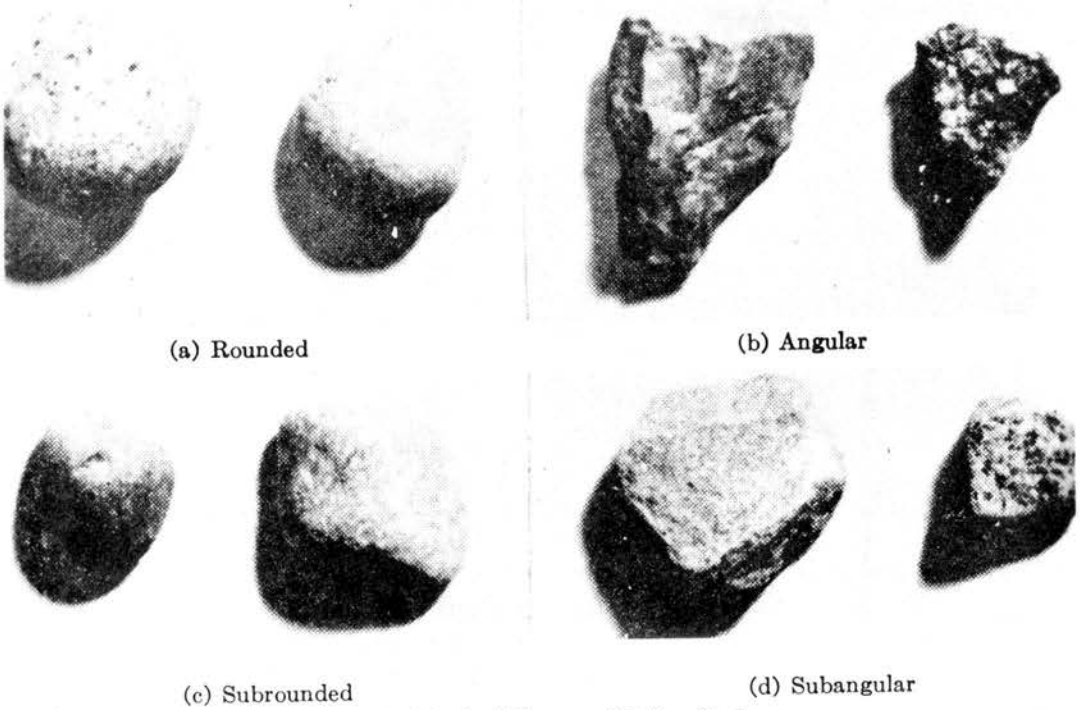

(a) Rounded (b) Angular

(c) Subrounded (d) Subangular

FIG. 1—Typical Shapes of Bulky Grains.

undisturbed samples in accordance with the identification procedure given in Table 1. The quantitative measure of the shear strength is given as a basis for correlation with values obtained from pocket penetrometers or shear gauges, which are often used to estimate consistency.

5.8 It is often desirable to add an estimate of the classification of the soil in accordance with the groups used for engineering classification (Fig. 1 of ASTM Method D 2487[2]). The group symbol should be placed in parentheses at the end of the description in order to indicate that the classification has been estimated.

Nominal Maximum Diameter	Minimum Sample Size
2–2½ in. (50–65 mm)	8 lb (3.6 kg)
1–1½ in. (25–38 mm)	4 lb (1.8 kg)
¼–½ in. (6–12 mm)	1 lb (0.45 kg)
less than ⅛ in. (3 mm)	¼ lb (0.11 kg)

6.2 Estimate the percentage of the coarse fraction larger than the No. 4 sieve (about ¼ in. or 5 mm).

6.2.1 Identify the soil as *gravel* if 50 per cent or more is larger.

6.2.2 Identify the soil as *sand* if less than 50 per cent is larger.

6.3 Estimate the percentage of fines.

TABLE 2—CHECK LIST FOR DESCRIPTION OF COARSE-GRAINED SOILS.

1. *Typical Name* Boulders Cobbles Gravel Sand
   Add descriptive adjectives for minor constituents.
2. *Gradation* Well graded Poorly graded (Uniformly graded or Gap-graded)
   Describe range of particle sizes or predominant size or sizes as coarse, medium, or fine sand or gravel.
3. *Maximum Particle Size* Note per cent boulders and cobbles
4. *Size Distribution* Approximate per cent gravel, sand and fines in fraction finer than 3 in. (76 mm). Indicate plasticity of fines (See 7.5).
5. *Grain Shape* Angular Subangular Subrounded Rounded
6. *Mineralogy* Rock type for gravel, predominant minerals in sand.
   Note especially presence of mica flakes, shaly particles and organic material.
7. *Color* Use Munsell notation, if possible
8. *Odor* None Earthy Organic
   May be neglected except for dark colored soils.
9. *Moisture content* Dry Moist Wet Saturated
10. *Natural Density* Loose Dense
11. *Structure* Stratified Lensed Nonstratified
12. *Cementation* Weak Strong
    Note reaction with HCl as none, weak or strong.
13. *Local or Geologic Name*
14. *Group Symbol* Estimate if desired. See Classification Chart, Fig. 1, ASTM Designation D 2487.

6. Procedure for Coarse-Grained Soils

6.1 Select a representative sample of the soil material finer than 3 in. (76 mm) sieve, spread it out for examination and follow identification procedures.

6.1.1 For accurate identification, the minimum amounts of sample should be in accordance with the following schedule:

6.3.1 Identify the soil as *clean gravel* or *clean sand* if the fines content is about 5 per cent or less.

6.3.1.1 Identify the soil as *well graded* if it has a wide range in grain size and substantial amounts of most intermediate particle sizes.

6.3.1.2 Identify the soil as *poorly graded* if it consists predominantly of one size (*uniformly graded*) or has a wide range of sizes with some intermediate sizes obviously missing (*gap-graded*).

6.3.2 Identify the soil as *gravel with fines* or *sand with fines* if the fines content is more than about 12 per cent.

6.3.2.1 Identify the soil as borderline *clean* to *with fines* if the fines content is between about 5 and 12 per cent.

6.3.2.2 Describe the fines as *silty* or *clayey* in accordance with identification procedures given under fine-grained soils.

6.4 Describe the grain shape of the sand and gravel portions of the coarse fraction as *angular*, *subangular*, *subrounded*, or *rounded*, (see Fig. 1).

6.4.1 *Angular* particles have sharp edges and relatively plane sides with unpolished surfaces.

6.4.2 *Subangular* particles are similar to angular but have somewhat rounded edges.

6.4.3 *Subrounded* particles exhibit nearly plane sides but have well-rounded corners and edges.

6.4.4 *Rounded* particles have smoothly curved sides and no edges.

6.5 Add appropriate descriptive notes regarding maximum size, size distribution, per cent cobbles and boulders, mineralogy, color, odor, moisture condition, natural density, structure, cementation, local or geologic name, and group symbol. Follow check list, Table 2.

NOTE 6—A complete description of a river valley sample estimated to contain about 20 per cent gravel, 65 per cent sand and 15 per cent silt could take the form of this example: *Silty Sand* well-graded gravelly. Maximum size, 8 in. (203 mm), about 5 per cent cobbles. About 20 per cent subrounded igneous gravel, 65 per cent subrounded to subangular quartz sand, and 15 per cent low plasticity fines. Light brown (7.5 YR 6/4). Moist. Dense. Stratified. No reaction to HCl. Alluvial sand (SM).

7. Procedure for Fine-Grained and Organic Soils

7.1 Select a representative sample of the material for examination. See 6.1.1.

7.2 Describe the color of the moist soil.

7.3 Describe the odor of the moist soil (warming if necessary to intensify the odor).

7.4 Identify the soil as *organic* if it has a black, dark brown or dark gray color (Munsell value 4 or less, chroma 3 or less) and a distinctive organic odor.

TABLE 3—IDENTIFICATION OF FINE-GRAINED SOIL FRACTIONS FROM MANUAL TESTS.

Typical Name	Dry Strength	Dilatancy Reaction	Toughness of Plastic Thread	Plasticity[a] Description
Sandy Silt	None—Very Low	Rapid	Weak—Soft	None—Slight
Silt	Very Low—Low	Rapid	Weak—Soft	None—Slight
Clayey Silt	Low—Medium	Rapid—Slow	Medium Stiff	Slight—Medium
Sandy Clay	Low—High	Slow—None	Medium Stiff	Slight—Medium
Silty Clay	Medium—High	Slow—None	Medium Stiff	Slight—Medium
Clay	High—Very High	None	Very Stiff	High
Organic Silt	Low—Medium	Slow	Weak—Soft	Slight
Organic Clay	Medium—Very High	None	Medium Stiff	Medium—High

[a] The term low may be substituted for slight in the description of plasticity.

7.4.1 Identify the soil as *highly organic* if it has predominantly a woody or fibrous texture resulting from a composition of partially decayed leaves, twigs, needles, stems, roots, etc. Further identification is unnecessary.

7.4.2 Identify the soil as *partly organic* if it does not have a fibrous texture and appears to be predominantly mineral in character. Proceed with identification procedure for fine-grained soils.

7.5 From the representative sample, select enough material to provide two cubes approximately $\frac{1}{2}$ in. (13 mm) in size after the gravel and coarse sand fraction has been removed. Use these

samples to perform the dry strength, dilatancy and plasticity tests.

7.5.1 *Dry Strength*—Mold one of the samples until it has the consistency of putty, adding a small amount of water if necessary, and form into a cube or ball. Allow the sample to dry completely in the sun, air or oven at a temperature not exceeding 110 C. Test the strength of the dry sample by crushing between the fingers.

NOTE 7—If the soil sample contains dry lumps, an experienced operator can determine the dry strength without preparing a pat for this particular purpose. The process of molding and drying usually produces higher strengths than are found in natural aggregates of soil. The presence of high-strength water-soluble cementing materials, such as calcium carbonates, may cause exceptionally high dry strengths but this can usually be detected from the intensity of the reaction with dilute hydrochloric acid (see 5.6).

7.5.1.1 Describe as *very low* or *none* if the dry sample crumbles with the mere pressure of handling.

7.5.1.2 Describe as *low* if the dry sample crumbles to powder with little finger pressure.

7.5.1.3 Describe as *medium* if considerable finger pressure is required to powder the sample. Usually, when the soil has medium dry strength a smear of powder can be easily rubbed off the smooth surface of the sample.

7.5.1.4 Describe as *high* if the sample cannot be crushed to powder by finger pressure, even though it may be broken. Usually, when the sample has high dry strength it is not even possible to rub off a smear of powder from a smooth surface of the dry sample.

7.5.1.5 Describe as *very high* if the sample cannot be broken between the thumb and a hard surface.

7.5.2 *Dilatancy*—Add sufficient water, if necessary, to the other one of the samples to produce a soft, but not sticky, consistency. Smooth the soil pat in the palm of one hand with the blade of a knife or small spatula, shake horizontally, and strike the back of the hand vigorously against the other hand several times. Note reaction. Squeeze the sample by closing the hand and note reaction.

7.5.2.1 Describe the reaction as *rapid* if water appears on the surface during shaking and disappears quickly upon squeezing. The presence or absence of the free water can be noted by the shiny or dull appearance of the surface.

7.5.2.2 Describe the reaction as *slow* if vigorous tapping is required to bring water to the surface and squeezing causes little change in appearance.

7.5.2.3 Describe the reaction as *none* if the test produces no visible change in the sample.

7.5.3 *Plastic Thread*—Following the completion of the dilatancy test the sample is shaped into an elongated pat and rolled by hand on a smooth surface or between the palms into a thread about $\frac{1}{8}$ in. (3 mm) in diameter. (If the sample is too wet to roll easily it should be spread out into a thin layer and allowed to lose some water by evaporation.) Fold the sample threads and reroll repeatedly until the thread crumbles at a diameter of about $\frac{1}{8}$ in. (3 mm). The thread will crumble near the *plastic limit*. Note the pressure required to roll out the thread especially near the plastic limit; also note the strength of the thread. After the thread crumbles, the pieces should be lumped together and kneaded until the lump crumbles. Note the toughness of the material during kneading.

7.5.3.1 Describe the thread as *weak and soft* if, near the plastic limit, only slight pressure is required to roll it, the thread has little or no strength and after crumbling the thread pieces cannot be formed into a coherent mass.

7.5.3.2 Describe the thread as *medium stiff* if, near the plastic limit, medium

pressure is required to roll it, the thread will support its own weight when a few inches long, and after crumbling the thread pieces can be molded into a lump which crumbles with slight kneading.

7.5.3.3 Describe the thread as *very stiff* if, near the plastic limit, considerable pressure is required to roll it, the thread will easily support its own weight when several inches long, and after crumbling the thread pieces can be molded into a lump which is coherent and tough.

7.6.1 *Sandy silt* has very low dry strength or none, a reaction to the dilatancy test of rapid, a plastic thread which is weak and soft, and a significant sand content which can be noted by a gritty feel. It can be described as having slight plasticity or none.

7.6.2 *Silt* has very low to low dry strength, a reaction to the dilatancy test of rapid, and a plastic thread which is weak and soft. It can be described as having slight plasticity or none.

TABLE 4—CHECK LIST FOR DESCRIPTION OF FINE-GRAINED AND PARTLY-ORGANIC SOILS.

1. *Typical Name*	Sandy Silt, Silty Clay, Silt, Clay, Clayey Silt, Organic Silt, Sandy Clay, Organic Clay
2. *Maximum Particle Size*	Note percentage of boulders and cobbles
3. *Size Distribution*	Approximate per cent gravel, sand and fines in fraction finer than 3 in. (76 mm)
4. *Dry Strength*	None, Very Low, Low, Medium, High, Very High
5. *Dilatancy*	None, Slow, Rapid
6. *Plastic Thread*	Weak and Soft, Medium Stiff, Very Stiff
7. *Plasticity of Fines*	None, Slight (low), Medium, High
8. *Color*	Use Munsell notation, if possible. Note presence of mottling or banding.
9. *Odor*	None, Earthy, Organic. May be neglected except for dark-colored soils.
10. *Moisture Content*	Dry, Moist, Wet, Saturated
11. *Consistency*	Soft, Firm (Medium), Stiff, Very Stiff, Hard
12. *Structure*	Stratified, Laminated (Varved), Fissured, Slickensided, Blocky, Lensed, Homogeneous (Nonstratified)
13. *Cementation*	Weak, Strong. Note reaction with dilute hydrochloric acid as none, weak or strong.
14. *Local or Geologic Name*	
15. *Group Symbol*	Estimate if desired. See Classification Chart, Fig. 1, ASTM Method D 2487

7.5.4 *Plasticity*—On the basis of its dry strength, dilatancy and toughness describe the overall plasticity as shown in Table 3.

7.6 Identify the soil as *silt* or *clay* with appropriate adjectives. See Table 3.

NOTE 8—The relative percentage of coarse and fine-grained material may be estimated by thoroughly shaking a mixture of soil and water in a test tube and then allowing the mixture to settle. The coarse particles will fall to the bottom and successively finer particles will be deposited with increasing time; the sand sizes will fall out of suspension in 20 to 30 sec. The relative proportions can be estimated from the relative volume of each size separate.

7.6.3 *Clayey silt* has low to medium dry strength, a reaction to the dilatancy test of rapid to slow, and a medium stiff plastic thread. It can be described as having slight or medium plasticity.

7.6.4. *Sandy clay* has low to high dry strength, a reaction to the dilatancy test of slow to none, and a medium stiff plastic thread which may break prematurely because of the presence of sand grains. It can be described as having slight or medium plasticity.

7.6.5 *Silty clay* has medium to high dry strength, a reaction to the dilatancy test of very slow to none, and a medium

stiff plastic thread. It can be described as having slight or medium plasticity.

7.6.6 *Clay* has a high to very high dry strength, no reaction to the dilatancy test and a very stiff plastic thread. It can be described as having high plasticity.

7.6.7 *Organic silt* has low to medium dry strength, a slow reaction to dilatancy test, and a weak and soft plastic thread It can be described as having slight plasticity.

7.6.8 *Organic clay* has medium to very high dry strength, a reaction to the dilatancy test of very slow to none, and a medium stiff plastic thread. It can be described as having medium or high plasticity.

7.7 Add appropriate descriptive notes regarding maximum size, size distribution, per cent cobbles and boulders, plasticity of fines, color, odor, moisture condition, consistency, structure, cementation, local or geologic name and group symbol. Follow check list, Table 4.

NOTE 9—A complete description of an undisturbed sample of a windblown silt could take the form of this example: *Clayey silt*, some fine sand. Maximum size about 0.1 mm. About 10 per cent fine sand, 90 per cent slightly plastic fines. Yellowish brown (10 YR 5/6 dry). Dry. Firm. Nonstratified, but with numerous vertical root holes. Strong reaction to HCl. Loess (ML).

KEY: Existing rules are printed in standard type face. Proposed additions to existing rules are printed in **boldface**, while proposed deletions from existing rules are printed within [single brackets]. Additions to proposed rules are **underlined and boldfaced**, while deletions from proposed rules are printed within [[double brackets]].

Appendix G



NACE Standard TM-01-69

Test Method

Laboratory Corrosion Testing of Metals for the Process Industries

Approved March, 1969
National Association of Corrosion Engineers
2400 West Loop South
Houston, Texas 77027
713/622-8980

The National Association of Corrosion Engineers issues this Standard in conformity to the best current technology regarding the specific subject. This Standard represents minimum requirements and should in no way be interpreted as a restriction on the use of better procedures or materials. Neither is this Standard intended to apply in any and all cases relating to the subject. Numerous external factors may negate the usefulness of this Standard in specific instances.

This Standard may be used in whole or in part by any party without prejudice if recognition of the source is included. The National Association of Corrosion Engineers assumes no responsibility for the interpretation or use of this Standard.

Nothing contained in this Standard of the National Association of Corrosion Engineers is to be construed as granting any right, by implication or otherwise, for manufacture, sale, or use in connection with any method, apparatus, or product covered by Letters Patent, nor as indemnifying or protecting anyone against liability for infringement of Letters Patent.

Foreword

Unit Committee T-5A ("Corrosion in Chemical Processes") of the National Association of Corrosion Engineers issues this Standard with a dual purpose.

The first purpose is to standardize, as much as possible, simple immersion corrosion studies. In this sense, this Standard is reasonable and effective without imposing inflexible requirements as to apparatus, conditions, or techniques. The actual conditions of test will be determined by the problem at hand and limited only by the ingenuity of the individual investigator.

The second purpose of this Standard is to present to the user a consensus on the best current technology in this field of laboratory corrosion testing. As such, this Standard enumerates and discusses the many factors which must be considered, controlled, and reported in order to aid in correlation or reproducibility of such studies.

The techniques described permit the investigator to reproduce to a considerable extent in the laboratory, through judicious experimental design, the process conditions which govern corrosion mechanisms. The tests are not to be construed as "accelerated" tests, which are generally unreliable. The methods described are also applicable to materials qualification tests for quality control. However, the latter require more rigid definition of apparatus, conditions, and technique.

The ultimate purpose is better correlation of results in the future and the reduction of conflicting reports through a more detailed recording of meaningful factors and conditions.

TEST METHOD

Laboratory Corrosion Testing of Metals for the Process Industries

CONTENTS

1. General 2

2. Specimen Preparation 2

3. Equipment and Apparatus 3

4. Test Conditions 4

5. Methods of Cleaning Specimens After the Test 7

6. Evaluation of Results 8

7. Calculating Corrosion Rates 9

8. Reporting the Data 10

References 10

1. General

1.1 This Standard describes the factors which influence laboratory tests. These factors include specimen preparation, apparatus, test conditions (solution composition, temperature, velocity, aeration, volume, method of supporting specimens, duration of test), methods of cleaning specimens, evaluation of results, and calculation of corrosion rates. This Standard also emphasizes the importance of recording all pertinent data and provides a check list for reporting test data.

1.2 Experience has shown that all metals and alloys do not respond alike to the many factors that control corrosion and that "accelerated" corrosion tests give indicative results only. Consequently, it is impractical to propose an inflexible standard laboratory corrosion testing procedure for general use except for material qualification tests, where standardization is obviously required.

1.3 In designing any corrosion test, consideration must be given to the various factors discussed in this test method because these factors have been found to affect greatly the results obtained.

2. Specimen Preparation

2.1 In laboratory tests, corrosion rates of duplicate specimens are usually within ± 10% under the same test conditions. Occasional exceptions, in which a large difference is observed, can occur under conditions of borderline passivity of metals or alloys that depend on a passive film for their resistance to corrosion. Therefore, at least duplicate specimens should be exposed in each test.

2.2 If the effects of corrosion are to be determined by changes in mechanical properties, untested duplicate specimens should be preserved in a non-corrosive environment for comparison with the corroded specimens. The mechanical property commonly used for comparison is the tensile strength. The procedure for determining this value is shown in detail in ASTM Standard E-8-66.

2.3 The size and the shape of specimens will vary with the purpose of the test, nature of the materials, and apparatus used. A large surface-to-mass ratio and a small ratio of edge area to total area are desirable. These ratios can be achieved through the use of square or circular specimens of minimum thickness. Circular specimens should be cut preferably from sheet and not bar stock to minimize the exposed end grain.

2.3.1 A circular specimen of about 1 1/2-inch diameter is a convenient shape for laboratory corrosion tests. With a thickness of approximately 1/8 inch and a 5/16 or 7/16-inch diameter hole for mounting, these specimens will readily pass through a 45/50 ground glass joint of a distillation kettle. The total surface area of a circular specimen is given by the following equation:

$$A = \frac{\pi}{2} (D^2 - d^2) + t\pi D + t\pi d$$

where t = thickness, D = diameter of the specimen, and d = diameter of the mounting hole. If the hole is completely covered by the mounting support, the last term ($t\pi d$) in the equation is omitted.

2.3.2 Strip coupons (2 x 1 x 1/16 or 1/8 inch) may be preferred as corrosion specimens, particularly if interface or liquid line effects are to be studied by the laboratory test, but such effects are beyond the scope of this Standard.

2.3.3 All specimens should be measured carefully to permit accurate calculation of the exposed areas. An area calculation accurate to plus or minus 1% is usually adequate.

2.4 More uniform results may be expected if a substantial layer of metal is removed from the specimens to eliminate variations in condition of the original metallic surface. This can be done either by chemical treatment (pickling), electrolytic removal, or by grinding with a coarse abrasive paper or cloth, such as No. 50, using care not to work harden the surface (see Section 2.7). At least 0.0001 inch or 10 to 15 milligrams per square inch should be removed. If clad alloy specimens are to be used, special attention must be given to insure that excessive metal is not removed. After final preparation of the specimen surface, the specimens should be stored in a desiccator until exposure if they are not used immediately.

2.5 Exposure of sheared edges should be avoided unless the purpose of the test is to study effects of the shearing operation. It may be desirable to test a surface representative of the material and metallurgical condition used in practice.

2.6 The specimen can be stamped with an appropriate identifying mark.

2.6.1 The stamp, besides identifying the specimen, introduces stresses and cold work in the specimen, that could be responsible for localized corrosion and/or stress corrosion cracking.

2.6.2 Stress corrosion cracking at the identifying mark is a positive indication of susceptibility to such

corrosion; however, the absence of cracking should not be interpreted as indicating resistance. Additional tests should be run to study specifically the effects of stress.

2.7 Final surface treatment of the specimens should include finishing with No. 120 abrasive paper or cloth, or the equivalent, unless the surface is to be used in the mill-finished condition. This resurfacing may cause some surface work-hardening to an extent which will be determined by the vigor of the surfacing operation but is not ordinarily significant.

2.7.1 Coupons of different alloy compositions should never be ground on the same cloth.

2.7.2 Wet grinding should be used on alloys which work harden quickly, such as the austenitic stainless steels.

2.8 The specimens should be finally degreased by scrubbing with bleach-free scouring powder, followed by thorough rinsing in water and in a suitable solvent (such as acetone, methanol, or a mixture of 50% methanol and 50% ether) and air dried. For relatively soft metals such as aluminum, magnesium, and copper, scrubbing with abrasive powder is not always needed and can mar the surface of the specimen. The use of towels for drying may introduce an error through contamination of the specimens with grease or lint.

2.9 The dried specimens should be weighed on an analytical balance to an accuracy of plus or minus 0.5 milligram.

2.10 The method of specimen preparation should be described when reporting tests results to facilitate interpretation of data by other persons.

2.10.1 Reports should include trade name or composition of specimens in the following order of preference: (a) chemical composition determined by analysis, (b) approximate or nominal chemical composition, and (c) trade name or grade and specification (if bought to MIL, ASTM, etc.)

2.10.2 Metallurgical condition of the specimens including the degree of hot or cold working and heat treatment, should be described as completely as possible.

2.11 The use of welded specimens is often desirable because some welds may be cathodic or anodic to the base metal and may affect the corrosion.

2.11.1 The heat-affected zone is also of importance but should be studied separately because welds on coupons do not faithfully reproduce heat input or size effects of full-size vessels.

2.11.2 Corrosion of a welded coupon is best reported by description and thickness measurements rather than a mils-per-year rate because the attack is normally localized and not representative of the entire surface.

2.11.3 A complete discussion of corrosion testing of welded coupons or the effect of heat treatment on the corrosion resistance of a metal is not within the scope of this Standard.

3. Equipment and Apparatus

3.1 A versatile and convenient apparatus should be used, consisting of a kettle or flask of suitable size (usually 500 to 5000 milliliters), a reflux condenser with atmospheric seal, a sparger for controlling atmosphere or aeration, a thermowell and temperature regulating device, a heating device (mantle, hot plate, or bath), and a specimen support system. If agitation is required, the apparatus can be modified to accept a suitable stirring mechanism such as a magnetic stirrer. A typical resin flask set up for this type test is shown in Figure 1.

3.2 These suggested components can be modified, simplified, or made more sophisticated to fit the needs of a particular investigation. The suggested apparatus is basic, and the apparatus is limited only by the judgment and ingenuity of the investigator.

3.2.1 A glass reaction kettle can be used where configuration and size of specimens will permit entry through the narrow kettle neck.

3.2.2 In some cases, a wide mouth jar with a suitable closure is sufficient when simple immersion tests at ambient temperatures are to be investigated.

3.2.3 Open beaker tests should not be used because of evaporation and contamination.

3.2.4 In more complex tests, provisions might be needed for continuous flow or replenishment of the corrosive liquid while simultaneously maintaining a controlled atmosphere.

4. Test Conditions

4.1 Selection of the conditions for a laboratory corrosion test will be determined by the purpose of the test.

4.1.1 If the test is to be a guide for the selection of a material for a particular purpose, the limits of controlling factors in service must be determined. These factors include oxygen concentration, temperature, rate of flow, pH value, and other important characteristics of the solution.

4.2 An effort should be made to duplicate all service conditions in the corrosion test.

4.3 It is important that test conditions be controlled throughout the test in order to ensure reproducible results.

4.4 The spread in corrosion rate values for duplicate specimens in a given test probably should not exceed ± 10% of the average when the attack is uniform.

4.5 Composition of solution.

4.5.1 Test solutions should be prepared accurately from chemicals conforming to the Standards of the Committee on Analytical Reagents of the American Chemical Society,[1] and distilled water, except in those cases where naturally occurring solutions or those taken directly from some plant process are used.

4.5.2 The composition of the test solution should be controlled to the fullest extent possible and should be described as completely and as accurately as possible when the results are reported.

4.5.2.1 Minor constituents should not be overlooked because they often affect corrosion rates.

4.5.2.2 Chemical content should be reported as percentage by weight of the solution. Molarity and normality are also helpful in defining the concentration of chemicals in the test solution.

4.5.3 The composition of the test solution should be checked by analysis at the end of the test to determine the extent of change in composition, such as might result from evaporation.

4.5.4 Evaporation losses should be controlled by a constant level device or by frequent additions of appropriate solution to maintain the original volume within ± 1%.

4.5.5 In some cases, composition of the test solution may change as a result of catalytic decomposition or by reaction with the test coupon. These changes should be determined if possible. Where required, the exhausted constituents should be added or a fresh solution provided, during the course of the test.

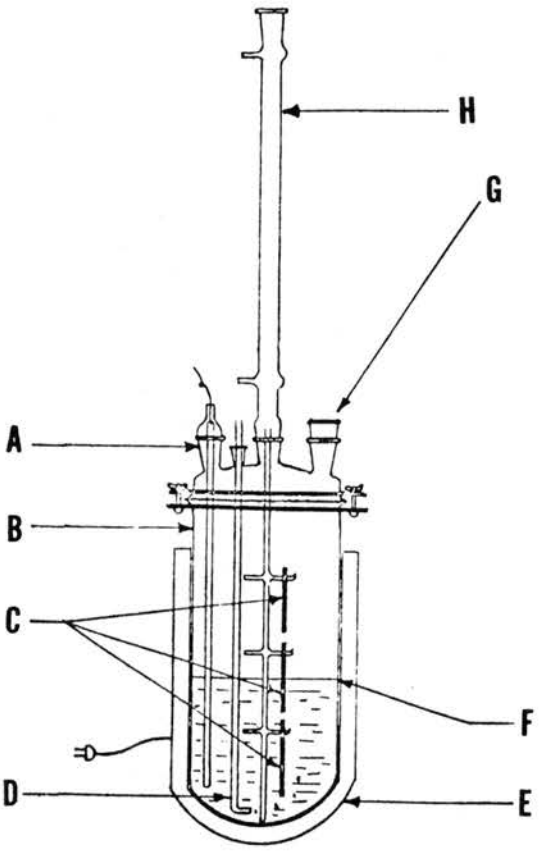

Figure 1 — Typical resin flask that can be used as a versatile and convenient apparatus to conduct simple immersion tests. Configuration of the flask top is such that more sophisticated apparatus can be added as required by the specific test being conducted. A = thermowell, B = resin flask, C = specimens hung on supporting device, D = gas inlet, E = heating mantle, F = liquid interface, G = opening in flask for additional apparatus that may be required, and H = reflux condenser.

4.5.6 When possible, only one type of metal should be exposed in a given test. If several different metals are exposed in the same solution, the corrosion products from one metal may affect the rate of attack on another metal. For example, copper corrosion products can reduce corrosion of stainless steel and titanium but can accelerate corrosion of aluminum.

4.6 Temperature of solution.

4.6.1 Temperature of the corroding solution should be controlled within ± 1 C (± 1.8 F) and must be stated in the report of test results.

4.6.2 If no specific temperature such as boiling, is required or if a temperature range is to be investigated, the selected temperatures used in the test must be reported.

4.6.3 For tests at ambient temperatures, the tests should be conducted at the highest temperature anticipated for stagnant storage in summer months. This temperature may be as high as 40 to 45 C (104 to 113 F) in some areas. The variation in temperature should be reported also (e.g., 40 C ± 2 C).

4.7 Aeration of solution.

4.7.1 Unless specified, the solution should not be aerated. Most tests related to process equipment should be run with the natural atmosphere inherent in the process, such as the vapors of the boiling liquid.

4.7.2 If aeration is used, the specimens should not be located in the direct air stream from the sparger. Extraneous effects can be encountered if the air stream impinges on the specimens.

4.7.3 If complete exclusion of dissolved oxygen is necessary, specific techniques are required such as prior heating of the solution and sparging with an inert gas (usually nitrogen). A liquid atmospheric seal is required on the test vessel to prevent further contamination.

4.7.4 If oxygen saturation of the test solution is desired, this can best be achieved by sparging. For other degrees of aeration, the solution should be sparged with synthetic mixtures of air or oxygen with an inert gas.

4.8 Solution velocity.

4.8.1 The effect of velocity is not usually determined in normal laboratory tests although specific tests have been designed for this purpose. However, for the sake of reproducibility, some velocity control is desirable.

4.8.2 Tests at the boiling point should be conducted with minimum possible heat input, and boiling chips should be used to avoid excessive turbulence and bubble impingement.

4.8.3 In tests conducted below the boiling point, thermal convection generally is the only source of liquid velocity.

4.8.4 In test solutions with high viscosities, supplemental controlled stirring with a magnetic stirrer is recommended.

4.9 Volume of test solution.

4.9.1 The volume of the test solution should be large enough to avoid any appreciable change in its corrosiveness either through exhaustion of corrosive constituents or accumulation of corrosion products that might affect further corrosion.

4.9.2 A suitable volume-to-area ratio is 125 milliliters of solution per square inch of specimen surface. This corresponds to the recommendation of ASTM Standard A262-64T for the Huey Test.

4.9.3 The preferred volume-to-area ratio is 250 milliliters of solution per square inch of specimen surface as stipulated in ASTM Standard A-279-63 on "Total Immersion Corrosion Test of Stainless Steels."

4.9.4 When the test objective is to determine the effect of a metal or alloy on the characteristics of the test solution (for example, to determine the effects of metals on dyes), it is desirable to reproduce the ratio of solution volume to exposed metal surface that exists in practice. The actual time of contact of the metal with the solution also must be taken into account. Any necessary distortion of the test conditions must be considered when interpreting the results.

4.10 Method of supporting specimens.

4.10.1 The supporting device and container should not be affected by or cause contamination of the test solution.

4.10.2 The method of supporting specimens will vary with the apparatus used for conducting the test but should be designed to insulate the specimens from each other physically and electrically and to insulate the specimens from any metallic container or supporting device used with the apparatus.

4.10.3 Shape and form of the specimen support should assure free contact of the specimen with the corroding solution, the liquid line, or the vapor phase as shown in Figure 1. If clad alloys are exposed, special procedures will be required to insure that only the cladding is exposed unless the purpose is to test the ability of the cladding to protect cut edges in the test solution.

4.10.4 Some common supports are glass or ceramic rods, glass saddles, glass hooks, fluorocarbon plastic strings, and various insulated or coated metallic supports.

4.11 Duration of test.

4.11.1 Although duration of any test will be determined by the nature and purpose of the test an

excellent procedure for evaluating the effect of time on corrosion of the metal and also on the corrosiveness of the environment in laboratory tests has been presented by Wachter and Treseder.[2] This technique is called the "Planned Interval Test," and the procedure and evaluation of results are given in Table I. Other procedures that require the removal of solid corrosion products between exposure periods will not measure accurately the normal changes of corrosion with time.

4.11.2 Materials which experience severe corrosion generally do not need lengthy tests to obtain accurate corrosion rates. Although this assumption is valid in many cases, there are cases where it is not valid. For example, lead exposed to sulfuric acid corrodes at an extremely high rate at first while building a protective film, then the rates decrease considerably so that further corrosion is negligible. The phenomenon of forming a protective film is observed with many corrosion resistant materials, and therefore short tests on such materials would indicate a high corrosion rate and would be completely misleading.

4.11.3 Short time tests also can give misleading results on alloys that form passive films, such as stainless steels. With borderline conditions, a prolonged test may be needed to permit breakdown of the passive film and subsequently more rapid attack. Consequently, tests run for long periods are considerably more realistic than those conducted for short durations. This statement must be qualified by stating that corrosion should not proceed to the point where the original specimen size or the exposed area is drastically reduced or where the metal is perforated.

4.11.4 If anticipated corrosion rates are moderate or low, the following equation[2] gives a suggested test duration:

$$\text{Duration of test (hr)} = \frac{2000}{\text{corrosion rate (mpy)}}$$

Examples: Where the corrosion rate is 10 mpy, the test should run for at least 200 hours. If the rate is 1 mpy, the duration should be at least 2000 hours.

> 4.11.4.1 This method of estimating test duration is useful only as an aid in deciding, after a test has been made, whether or not it is desirable to repeat the test for a longer period. The most common testing periods are 48 to 168 hours (2 to 7 days).

4.11.5 In some cases, it may be necessary to know the degree of contamination caused by the products of corrosion; this can be accomplished by analysis of

TABLE 1 - Planned Interval Test[2]

(Reprinted by permission from "Chemical Engineering Progress," June, 1947.)

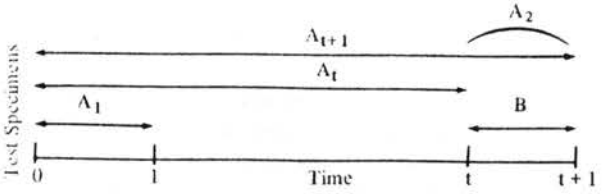

Identical specimens all placed in the same corrosive fluid. Imposed conditions of the test kept constant for entire time t + 1. Letters, A_1, A_t, A_{t+1}, B, represent corrosion damage experienced by each test specimen. A_2 is calculated by subtracting A_t from A_{t+1}.

Occurrences During Corrosion Test		Criteria
Liquid corrosiveness	unchanged	$A_1 = B$
	decreased	$B < A_1$
	increased	$A_1 < B$
Metal corrodibility	unchanged	$A_2 = B$
	decreased	$A_2 < B$
	increased	$B < A_2$

Combinations of Situations

Liquid Corrosiveness	Metal Corrodibility	Criteria
1. unchanged	unchanged	$A_1 = A_2 = B$
2. unchanged	decreased	$A_2 < A_1 = B$
3. unchanged	increased	$A_1 = B < A_2$
4. decreased	unchanged	$A_2 = B < A_1$
5. decreased	decreased	$A_2 < B < A_1$
6. decreased	increased	$A_1 > B < A_2$
7. increased	unchanged	$A_1 < A_2 = B$
8. increased	decreased	$A_1 < B > A_2$
9. increased	increased	$A_1 < B < A_2$

Example of Planned Interval Corrosion Test

Conditions: Duplicate strips of low-carbon steel, each 3/4 by 3 in., immersed in 200 ml of 10% $AlCl_3$ - 90% $SbCl_3$ mixture through which dried HCl gas was slowly bubbled at atm. pressure. Temperature 90 C.

	Interval, days	Wt. Loss, mg	Penetration, mils	Apparent Corrosion Rate, mils/yr
A_1	0-1	1080	1.69	620
A_t	0-3	1430	2.24	270
A_{t+1}	0-4	1460	2.29	210
B	3-4	70	0.11	40
A_2	calc. 3-4	30	0.05	18

$A_2 < B < A_1$
$0.05 < 0.11 < 1.69$

Therefore, liquid markedly decreased in corrosiveness during test, and formation of partially protective scale on the steel was indicated.

the solution after corrosion has occurred. The corrosion rate can be calculated from the concentration of the matrix metal found in the solution, and it can be compared to that determined from the weight loss of the specimens. However, some of the corrosion products usually adhere to the specimen as a scale, and the corrosion rate calculated from the metal content in the solution is not always correct.

5. Methods of Cleaning Specimens After the Test

5.1 Before specimens are cleaned, their appearance should be observed and recorded. Location of deposits, variations in types of deposits, or variations in corrosion products are extremely important in evaluating localized corrosion, such as pitting and concentration cell attack.

5.2 Cleaning specimens after the test is a vital step in the corrosion test procedure and, if not done properly, can cause misleading results.

5.2.1 Generally, the cleaning procedure should

TABLE 2–Methods for Chemical Cleaning of Corrosion Test Specimens After Exposure

Material	Chemical	Time	Temperature	Remarks
Aluminum and Aluminum Alloys	70% HNO_3	2-3 min	Room	Follow by light scrub.
	or			
	2% CrO_3, 5% H_3PO_4, Soln.	10 min	175-185 F (79-85 C)	Used when oxide film resists HNO_3 treatment. Follow by 70% HNO_3 treatment previously described.
Copper and Copper Alloys	15-20% HCl	2-3 min	Room	Follow by light scrub.
	or			
	5-10% H_2SO_4	2-3 min	Room	Follow by light scrub.
Lead and Lead Alloys	1% acetic acid	10 min	Boiling	Follow by light scrub. Removes PbO.
	or			
	5% ammonium acetate	5 min	Hot	Follow by light scrub. Removes PbO and/or $PbSO_4$.
	or			
	80 g/l NaOH, 50 g/l mannitol, 0.62 g/l hydrazine sulfate	30 min, or until clean	Boiling	Follow by light scrub.
Iron and Steel	20% NaOH, 200 g/l zinc dust	5 min	Boiling	---
	or			
	conc. HCl, 50 g/l $SnCl_2$ + 20 g/l $SbCl_3$	Until clean	Cold	---
Magnesium and Magnesium Alloys	15% CrO_3, 1% $AgCrO_4$ Soln.	15 min	Boiling	---
Nickel and Nickel Alloys	15-20% HCl	Until clean	Room	---
	or			
	10% H_2SO_4	Until clean	Room	---
Stainless Steel	10% HNO_3	Until clean	140 F (60 C)	Avoid contamination with chlorides
Tin and Tin Alloys	15% Na_3PO_4	10 min	Boiling	Follow by scrubbing.
Zinc	10% NH_4Cl	5 min	Room	Follow by light scrubbing.
	followed by			
	5% CrO_3, 1% $AgNO_3$ Soln.	20 sec	Boiling	---
	or			
	Saturated ammonium acetate	Until clean	Room	Follow by light scrub.
	or			
	100 g/l NaCN	15 min	Room	---

remove all corrosion products from specimens with a minimum removal of sound metal.

5.2.2 Set rules cannot be applied to specimen cleaning because procedures will vary depending on the type of metal being cleaned and on the degree of adherence of corrosion products.

5.3 Cleaning methods can be divided into three general categories: mechanical, chemical, and electrolytic.

5.3.1 Mechanical cleaning includes scrubbing, scraping, brushing, mechanical shocking, and ultrasonic procedures. Scrubbing with a bristle brush and mild abrasive is the most popular of these methods; the others are used principally as a supplement to remove heavily encrusted corrosion products before scrubbing. Care should be used to avoid the removal of sound metal.

5.3.2 Chemical cleaning implies the removal of material from the surface of the specimen by dissolution in an appropriate chemical solution. Solvents such as acetone, carbon tetrachloride, and alcohol, are used to remove oil, grease, or resin and are usually applied prior to other methods of cleaning. Chemicals are chosen for application to a specific material. Some of these treatments in general use are outlined in Table 2.

5.3.3 Electrolytic cleaning should be preceded by scrubbing to remove loosely adhering corrosion products. One method of electrolytic cleaning that has been found to be useful for many metals and alloys is as follows:

Solution	5% (by weight) H_2SO_4
Anode	Carbon or lead
Cathode	Test specimen
Cathode C.D.	20 amp/dm^2 (129 amp/sq in)
Inhibitor	2 cc organic inhibitor per liter
Temperature	74 C (165 F)
Exposure period	3 minutes

5.3.3.1 Precautions must be taken to insure good electrical contact with the specimen, to avoid contamination of the solution with easily reducible metal ions, and to insure that inhibitor decomposition has not occurred. Instead of using 2 milliliters of any proprietary inhibitor, 0.5 gram per liter of inhibitors such as diorthotolyl thiourea or quinoline ethiodide can be used.

5.4 Whatever treatment is used to clean specimens after a corrosion test, its effect in removing metal should be determined, and the weight loss should be corrected accordingly. A "blank" specimen should be weighed before and after exposure to the cleaning procedure to establish this weight loss.

5.4.1 Following removal of all scale, the specimen should be treated as discussed in Section 2.8.

5.4.2 A description of the cleaning method should be included with the data reported.

6. Evaluation of Results

6.1 After corroded specimens have been cleaned, they should be reweighed with an accuracy corresponding to that of the original weighing. The weight loss during the test period can be used as the principal measure of corrosion.

6.2 After the specimens have been reweighed, they should be examined carefully for the presence of pits. If there are pits, the average and maximum depths of pits are determined after measurement with a pit gauge or a calibrated microscope which can be focused first on the edge and then on the bottom of the pit. An excellent discussion of pitting corrosion has been published.[3]

6.2.1 Pit depths should be reported in millimeters or thousandths of an inch for the test period and not interpolated or extrapolated to millimeters per year or thousandths of an inch per year or any other arbitrary period because rarely, if ever, is the rate of initiation or propagation of pits uniform.

6.2.2 The size, shape, and distribution of pits should be noted. A distinction should be made between those occurring underneath the supporting devices (concentration cells) and those on surfaces that were freely exposed to the test solution.

6.3 If the material being tested is suspected of being subject to dealloying forms of corrosion such as dezincification, or to intergranular attack, a cross section of the specimen should be microscopically examined to determine the type and depth of such attack.

6.4 The specimen may be subjected to simple bending tests to determine whether any embrittlement has occurred.

6.5 It may be desirable to make quantitative mechanical tests to compare the exposed specimens with uncorroded specimens reserved for the purpose, as described in Section 2.2.

7. Calculating Corrosion Rates

7.1 The calculation of corrosion rates requires several pieces of information and several assumptions.

7.1.1 The use of corrosion rates implies that all weight loss has been due to general corrosion and not to localized corrosion, such as pitting or sensitized areas on welded coupons. Localized corrosion is reported separately.

7.1.2 The use of corrosion rates also implies that the material has not been internally attacked as by dezincification or intergranular corrosion.

7.1.3 Internal attack can be expressed as a corrosion rate if desired. However, the calculations must not be based on weight loss, which is usually small, but on microsections which show depth of attack.

7.2 Assuming that localized or internal corrosion is not present or are recorded separately in the report, the corrosion rate expressed as mils penetration per year (mpy) or millimeters per year (mmpy) can be calculated by the equations.

$$\text{mpy} = \frac{\text{wt loss x } 534}{\text{(area) (time) (metal density)}}$$

$$\text{mmpy} = \frac{\text{wt loss x } 13.56}{\text{(area) (time) (metal density)}}$$

where weight loss is in milligrams, area is square inches of metal surface exposed, and time is hours exposed.

Metal density of many common alloys (expressed in grams per cubic centimeter) is listed in Table 3. The density for new or unlisted alloys can be obtained from the producer or from various metal handbooks.

TABLE 3 – Density of Common Metals for Use in Corrosion Rate Calculations[9]

Alloy	Density, g/cc
Aluminum	
99.0 + Al	2.71
Al, 1.2 Mn	2.73
Al, 1.0 Mg, 0.6 Si, 0.25 Cr	2.70
Brass	
85 Cu, 15 Zn	8.75
71 Cu, 28 Zn, 1 Sn	8.53
65 Cu, 35 Zn	8.47
60 Cu, 39.25 Zn, 0.75 Sn	8.41
Bronze	
95 Cu, 5 Sn	8.86
90 Cu, 10 Sn	8.78
85 Cu, 5 Sn, 5 Zn, 5 Pb	8.80
94.8 Cu, 3 Si	8.53
95 Cu, 5 Al	8.17
85-90 Cu, 10 Al	7.58
Copper	
99.90 Cu, 0.01 P	8.91
Cupro-Nickel	
90 Cu, 10 Ni	8.93
70 Cu, 30 Ni	8.94
Iron	
94 Fe, 3.5 C, 2.5 Si	7.00
96 Fe, 3.0 C	7.60
99.94 Fe, 0.025 S, 0.017 Mn, 0.012 C, 0.005 P	7.86
84.3 Fe, 14.5 Si, 0.35 Mn, 0.85 C	7.00
Lead	
99.90 + Pb	11.34
Nickel	
99.4 Ni + Co	8.89
67 Ni, 30 Cu	8.84
62 Ni, 30 Mo, 5 Fe	9.24
58 Ni, 17 Mo, 15 Cr, 5 W, 5 Fe	8.94
80 Ni, 14 Cr, 6 Fe	8.51
Steel	
0.20 C, Mn, P, S	7.85
Stainless Steel	
11.50-13.50 Cr, 0.15 C	7.75
14.00-18.00 Cr, 0.12 C	7.70
18.00-20.00 Cr, 8.00-12.00 Ni, 0.08 C	7.93
16.00-18.00 Cr, 10.00-14.00 Ni, 2.00-3.00 Mo, 0.08 C	7.98
17.00-19.00 Cr, 9.00-12.00 Ni, 0.08 C, Ti	8.02
17.00-19.00 Cr, 9.00-12.00 Ni, 0.08 C, Cb	8.02
19.00-21.00 Cr, 24.00-30.00 Ni, 2.00-3.00 Md, 3.00-4.00 Cu	8.00
Tantalum	16.60
Tin	7.30
Titanium	4.54
Zirconium	6.53

8. Reporting the Data

8.1 The importance of reporting all data as completely as possible cannot be overemphasized.

8.2 Expansion of the testing program in the future or correlating the results with tests of other investigators will be possible only if all pertinent information is properly recorded.

8.3 The following checklist is a recommended guide for reporting all important information and data:

8.3.1 Corrosive media and concentration (changes during test).

8.3.2 Volume of test solution.

8.3.3 Temperature (maximum, minimum, average).

8.3.4 Aeration (describe conditions or technique).

8.3.5 Agitation (describe conditions or technique).

8.3.6 Type of apparatus used for test.

8.3.7 Duration of each test.

8.3.8 Chemical composition or trade name of metals tested.

8.3.9 Form and metallurgical conditions of specimens.

8.3.10 Exact size, shape, and area of specimens.

8.3.11 Treatment used to prepare specimens for test.

8.3.12 Number of specimens of each material tested, and whether specimens were tested separately or which specimens were tested in the same container.

8.3.13 Method used to clean specimens after exposure and the extent of any error expected by this treatment.

8.3.14 Actual weight losses for each specimen.

8.3.15 Evaluation of attack if other than general, such as crevice corrosion under support rod, pit depth and distribution, and results of microscopic examination or bend tests.

8.3.16 Corrosion rates for each specimen expressed as mils per year.

8.4 Minor occurrences or deviations from the proposed test program often can have significant effects and should be reported if known.

8.5 Statistics can be a valuable tool for analyzing the results from test programs designed to generate adequate data and should be used wherever possible. Excellent references for the use of statistics in corrosion studies include References 4 through 8.

References

1. Joseph Rosin. Reagent Chemicals and Standards, Fifth Edition. D. Van Nostrand Co., Inc., 120 Alexander St., Princeton, N. J., 1966.
2. A. Wachter and R. S. Treseder. Corrosion Testing Evaluation of Metals for Process Equipment. *Chemical Engineering Progress*. 43, 315-326 (1947) June.
3. N. D. Greene and M. G. Fontana. A Critical Analysis of Pitting Corrosion. *Corrosion*, 15, 25t (1959) January.
4. Harold S. Mickley, Thomas K. Sherwood, and Charles E. Reed (editors). Applied Mathematics in Chemical Engineering, (second edition). McGraw-Hill, New York, N. Y., 1957.
5. D. M. Douglas. Are You Using or Abusing Data? Paper presented at the Northeast-North Central Region Conference, National Association of Corrosion Engineers, October 4-6, 1965, Pittsburgh, Pa.
6. W. J. Youden. Experimentation and Measurement. National Science Teachers Association, Washington, D. C., 1962.
7. F. F. Booth and G. E. G. Tucker. Statistical Distribution of Endurance in Electrochemical Stress-Corrosion Tests. *Corrosion*, 21, 173 (1965) May.
8. Compilation of Examples of Applying Statistics to Corrosion Problems. Report of ASTM Committee G-1 on Corrosion of Metals, prepared by Subcommittee III on Statistics. ASTM, 1916 Race St., Philadelphia, Pa.
9. Metals Handbook, American Society for Metals, Metals Park, Novelty, Ohio, 8th Edition, Volume 1, 1961.

Appendix H

Title 10 C.F.R. Waste Disposal

§ 20.301 General requirement.

No licensee shall dispose of licensed material except:

(a) By transfer to an authorized recipient as provided in the regulations in Part 30, 40, or 70 of this chapter, whichever may be applicable; or

(b) As authorized pursuant to § 20.302; or

(c) As provided in § 20.303 or § 20.304, applicable respectively to the disposal of licensed material by release into sanitary sewerage systems or burial in soil, or in § 20.106 (Radioactivity in effluents to unrestricted areas).

[25 FR 10914, Nov. 17, 1960, as amended at 39 FR 27121, July 25, 1974]

§ 20.302 Method for obtaining approval of proposed disposal procedures.

(a) Any licensee or applicant for a license may apply to the Commission for approval of proposed procedures to dispose of licensed material in a manner not otherwise authorized in the regulations in this chapter. Each application should include a description of the licensed material and any other radioactive material involved, including the quantities and kinds of such material and the levels of radioactivity involved, and the proposed manner and conditions of disposal. The application should also include an analysis and evaluation of pertinent information as to the nature of the environment, including topographical, geological, meteorological, and hydrological characteristics; usage of ground and surface waters in the general area; the nature and location of other potentially affected facilities; and procedures to be observed to minimize the risk of unexpected or hazardous exposures.

(b) The Commission will not approve any application for a license to receive licensed material from other persons for disposal on land not owned by the Federal government or by a State government.

(c) The Commission will not approve any application for a license for disposal of licensed material at sea unless the applicant shows that sea disposal offers less harm to man or the environment than other practical alternative methods of disposal.

[25 F.R. 10914, Nov. 17, 1960, as amended at 26 F.R. 352, Jan. 18, 1961; 36 F.R. 23138, Dec. 4, 1971]

§ 20.303 Disposal by release into sanitary sewage systems.

No licensee shall discharge licensed material into a sanitary sewerage system unless:

(a) It is readily soluble or dispersable in water; and

(b) The quantity of any licensed or other radioactive material released into the system by the licensee in any one day does not exceed the larger of subparagraphs (1) or (2) of this paragraph:

(1) The quantity which, if diluted by the average daily quantity of sewage released into the sewer by the licensee, will result in an average concentration equal to the limits specified in Appendix B, Table I, Column 2 of this part; or

(2) Ten times the quantity of such material specified in Appendix C of this part; and

(c) The quantity of any licensed or other radioactive material released in any one month, if diluted by the average monthly quantity of water released by the licensee, will not result in an average concentration exceeding the limits specified in Appendix B, Table I, Column 2 of this part; and

(d) The gross quantity of licensed and other radioactive material released into the sewerage system by the licensee does not exceed one curie per year.

Excreta from individuals undergoing medical diagnosis or therapy with radioactive material shall be exempt from any limitations contained in this section.

§ 20.304 Disposal by burial in soil.

No licensee shall dispose of licensed material by burial in soil unless:

(a) The total quantity of licensed and other radioactive materials buried at any one location and time does not exceed, at the time of burial, 1,000 times the amount specified in Appendix C of this part; and

(b) Burial is at a minimum depth of four feet; and

(c) Successive burials are separated by distances of at least six feet and not more than 12 burials are made in any year.

§ 20.305 Treatment or disposal by incineration.

No licensee shall treat or dispose of licensed material by incineration except as specifically approved by the Commission pursuant to §§ 20.106(b) and 20.302.

[29 FR 14435, Oct. 21, 1964]

§ 20.106 Radioactivity in effluents to unrestricted areas.

(a) A licensee shall not possess, use, or transfer licensed material so as to release to an unrestricted area radioactive material in concentrations which exceed the limits specified in Appendix "B", Table II of this part, except as authorized pursuant to § 20.302 or paragraph (b) or this section. For purposes of this section concentrations may be averaged over a period not greater than one year.

(b) An application for a license or amendment may include proposed limits higher than those specified in paragraph (a) of this section. The Commission will approve the proposed limits if the applicant demonstrates:

(1) That the applicant has made a reasonable effort to minimize the radioactivity contained in effluents to unrestricted areas; and

(2) That it is not likely that radioactive material discharged in the effluent would result in the exposure of an individual to concentrations of radioactive material in air or water exceeding the limits specified in Appendix "B", Table II of this part.

(c) An application for higher limits pursuant to paragraph (b) of this section shall include information demonatrating that the applicant has made a reasonable effort to minimize the radioactivity discharged in effluents to unrestricted areas, and shall include, as pertinent:

(1) Information as to flow rates, total volume of effluent, peak concentration of each radionuclide in the effluent, and concentration of each radionuclide in the effluent averaged over a period of one year at the point where the effluent leaves a stack, tube, pipe, or similar conduit;

(2) A description of the properties of the effluents, including:

(i) chemical composition:

(ii) physical characteristics, including suspended solids content in liquid effluents, and nature of gas or aerosol for air effluents;

(iii) the hydrogen ion concentrations (p^H) of liquid effluents; and

(iv) the size range of particulates in effluents released into air.

(3) A description of the anticipated human occupancy in the unrestricted area where the highest concentration of radioactive material from the effluent is expected, and, in the case of a river or stream, a description of water uses downstream from the point of release of the effluent.

(4) Information as to the highest concentration of each radionuclide in an unrestricted area, including anticipated concentrations averaged over a period of one year:

(i) In air at any point of human occupancy; or

(ii) In water at points of use downstream from the point of release of the effluent.

(5) The background concentration of radionuclides in the receiving river or stream prior to the release of liquid effluent.

(6) A description of the environmental monitoring equipment, including sensitivity of the system, and procedures and calculations to determine concentrations of radionuclides in the unrestricted area and possible reconcentrations of radionuclides.

(7) A description of the waste treatment facilities and procedures used to reduce the concentration of radionuclides in effluents prior to their release.

(d) For the purpose of this section the concentration limits a Appendix "B", Table II of this part shall apply at the boundary of the restricted area. The concentration of radioactive material discharged through a stack, pipe or similar conduit may be determined wih respect to the point where the material leaves the conduit. If the conduit discharges within the restricted area, the concentration at the boundary may be determined by applying appropriate factors for dilution, dispersion, or decay between the point of discharge and the boundary.

(e) In addition to limiting concentrations in effluent streams, the Commission may limit quantities of

KEY: Existing rules are printed in standard type face. Proposed additions to existing rules are printed in **boldface**, while proposed deletions from existing rules are printed within [single brackets]. Additions to proposed rules are **underlined and boldfaced**, while deletions from proposed rules are printed within [[double brackets]].

radioactive materials released in air or water during a specified period of time if it appears that the daily intake of radioactive material from air, water, or food by a suitable sample of an exposed population group, averaged over a period not exceeding one year, would otherwise exceed the daily intake resulting from continuous exposure to air or water containing one-third the concentration of radioactive materials specified in Appendix "B", Table II of this part.

(f) The provisions of this section do not apply to disposal of radioactive material into sanitary sewerage systems, which is governed by § 20.303.

[29 F.R. 14434, Oct. 21, 1964]

Appendix I

Title 16 C.F.R.

§ 1500.41 Method of testing primary irritant substances.

Primary irritation to the skin is measured by a patch-test technique on the abraded and intact skin of the albino rabbit, clipped free of hair. A minimum of six subjects are used in abraded and intact skin tests. Introduce under a square patch, such as surgical gauze measuring 1 inch by 1 inch and two single layers thick, 0.5 milliliter (in the case of liquids) or 0.5 gram (in the case of solids and semisolids) of the test substance. Dissolve solids in an appropriate solvent and apply the solution as for liquids. The animals are immobilized with patches secured in place by adhesive tape. The entire trunk of the animal is then wrapped with an impervious material, such as rubberized cloth, for the 24-hour period of exposure. This material aids in maintaining the test patches in position and retards the evaporation of volatile substances. After 24 hours of exposure, the patches are removed and the resulting reactions are evaluated on the basis of the designated values in the following table:

Skin reaction	Value[1]
Erythema and eschar formation:	
No erythema	0
Very slight erythema (barely perceptible)	1
Well-defined erythema	2
Moderate to severe erythema	3
Severe erythema (beet redness) to slight eschar formations (injuries in depth)	4
Edema formation:	
No edema	0
Very slight edema (barely perceptible)	1
Slight edema (edges of area well defined by by definite raising)	2
Moderate edema (raised approximately 1 millimeter)	3
Severe edema (raised more than 1 millimeter and extending beyond the area of exposure)	4

[1]The "value" recorded for each reading is the average value of the six or more animals subject to the test.

Readings are again made at the end of a total of 72 hours (48 hours after the first reading). An equal number of exposures are made on areas of skin that have been previously abraded. The abrasions are minor incisions through the stratum corneum, but not sufficiently deep to disturb the derma or to produce bleeding. Evaluate the reactions of the abraded skin at 24 hours and 72 hours, as described in this paragraph. Add the values for erythema and eschar formation at 24 hours and at 72 hours for intact skin to the values on abraded skin at 24 hours and at 72 hours (four values). Similarly, add the values for edema formation at 24 hours and at 72 hours for intact and abraded skin (for values). The total of the eight values is divided by four to give the primary irritation score; for example:

Skin reaction	Exposure time (hours)	Evaluation value
Erythema and eschar formation:		
Intact skin	24	2
Do	72	1
Abraded skin	24	3
Do	72	2
Subtotal		8
Edema formation:		
Intact skin	24	0
Do	72	1
Abraded skin	24	1
Do	72	2
Subtotal		4
Total		12

Thus, the primary irritation score is $12 \div 4 = 3$.

Appendix J

Title 49 C.F.R.

§ 173.50 An explosive.

(a) For the purpose of Parts 170-189 of this subchapter an explosive is defined as any chemical compound, mixture, or device, the primary or common purpose of which is to function by explosion, i.e., with substantially instantaneous release of gas and heat, unless such com-

pound, mixture, or device is otherwise specifically classified in Parts 170-189 of this subchapter.

§ 173.300 Definitions.

For the purpose of Parts 170-189 of this chapter, the following terminology is defined:

(a) *Compressed gas*. The term ''compressed gas'' shall designate any material or mixture having in the container an absolute pressure exceeding 40 p.s.i. at 70°F. or, regardless of the pressure at 70°F., having an absolute pressure exceeding 104 p.s.i. at 130°F.; or any liquid flammable material having a vapor pressure exceeding 40 p.s.i. absolute at 100°F. as determined by ASTM Test D-323.

(b) *Flammable compressed gas*. Any compressed gas as defined in paragraph (a) of this section shall be classified as ''flammable compressed gas'' if any one of the following occurs:

(1) Either a mixture of 13 percent or less (by volume) with air forms a flammable mixture or the flammable range with air is wider than 12 percent regardless of the lower limit. These limits shall be determined at atmospheric temperature and pressure. The method of sampling and test procedure shall be acceptable to the Bureau of Explosives.

(2) Using the Bureau of Explosives' Flame Projection Apparatus (see Note 1), the flame projects more than 18 inches beyond the ignition source with valve opened fully, or the flame flashes back and burns at the valve with any degree of valve opening.

(3) Using the Bureau of Explosives' Open Drum Apparatus (see Note 1) there is any significant propagation of flame away from the ignition source.

(4) Using the Bureau of Explosives' Closed Drum Apparatus (see Note 1), there is any explosion of the vapor-air mixture in the drum.

(c) *Non-liquefied compressed gas*. A ''non-liquefied compressed gas'' is a gas, other than gas in solution, which under the charged pressure is entirely gaseous at a temperature of 70°F.

(d) *Liquefied compressed gas*. A ''liquefied compressed gas'' is a gas which, under the charged pressure, is partially liquid at a temperature of 70°F.

(e) *Compressed gas in solution*. A ''compressed gas in solution'' is a non-liquefied compressed gas which is dissolved in a solvent.

(f) *Flammable range*. The term ''flammable range'' shall designate the difference between the minimum and maximum volume percentages of the material in air that forms a flammable compressed gas.

(g) *Filling density*. The term ''filling density'' shall designate the percent ratio of the weight of gas in a container to the weight of water that the container will hold at 60°F. (One pound of water equals 27.737 cubic inches at 60°F.) For example, for a liquefied petroleum gas of 0.504/0.510 specific gravity, a 100-pound cylinder holds 238.1 pounds of water and the filling density is 42 percent; therefore the amount of gas permitted is 0.42×238.1 or 100 pounds.

(h) *Service pressure*. The term ''service pressure'' shall designate the authorized pressure marking on the container. For example, for cylinders marked ''DOT 3A1800'', the service pressure is 1800 psig (pounds per square inch gauge).

[29 F.R. 18743, Dec. 29, 1964, as amended by Amdt. 173-16, 34 F.R. 18248, Nov. 14, 1969; Amdt. 173-54, 36 F.R. 18469, Sept. 15, 1971]

§ 173.300 Definitions.

(b) *Flammable compressed gas*. Any compressed gas as defined in paragraph (a) of this section shall be classed as ''flammable gas'' if any one of the following occurs:

§ 177.824 Retesting and inspection of cargo tanks.

(a) *General*. In accordance with § 173.33 of this chapter (cargo tank use authorization) every cargo tank and every compartment of a cargo tank authorized as a qualified container, except those cargo tanks having a capacity of 3,000 gallons or less used exclusively for the transportation of flammable liquids, must fulfill the applicable requirements as set forth in this section.

(1) Each cargo tank, except specifications MC 330 and MC 331 cargo tanks, must be in compliance with the testing requirements prescribed in paragraphs (a), (b),

NOTE 1: A description of the Bureau of Explosives' Flame Projection Apparatus, Open Drum Apparatus. Closed Drum Apparatus, and method of tests may be procured from the Bureau of Explosives.

KEY: Existing rules are printed in standard type face. Proposed additions to existing rules are printed in **boldface**, while proposed deletions from existing rules are printed within [single brackets]. Additions to proposed rules are **underlined and boldfaced**, while deletions from proposed rules are printed within [[double brackets]].

(c), and (d) of this section. Each cargo tank must be in accordance with the marking requirement of paragraph (h) of this section.

(2) Every cargo tank whether constructed in accordance with DOT specifications or being operated as a novel tank under special permit authorization shall not continue in service unless it has successfully fulfilled the testing requirements as set forth in this section.

(b) *Visual inspection requirements*. Every cargo tank shall receive an external visual inspection at least once in ever 2-year period. The first such inspection shall be required at the time the next hydrostatic retest is due or prior to January 31, 1969, whichever comes first. This inspection shall be made by a responsible and experienced inspector who shall record the condition of the items set forth below. The inspection record shall be approved and signed by an authorized representative of the owner or operator. A written report of each inspection shall be retained in carrier's or owner's files for a period of 2 years after the date of inspection. Where insulation precludes external visual inspection, the cargo tank shall receive a visual internal inspection for corroded areas, defects in welds or tank sheets. Where visual inspection is precluded by both internal coating and external insulation or when the cargo tank is not equipped with a manhole, the tank shall be hydrostatically tested at 5-year intervals except as otherwise provided in paragraph (c) of this section. The tank shall not be placed in or returned to service if evidence of any unsafe condition is discovered and until such condition has been corrected. Inspection shall consist of the following items:

(1) The tank shall be inspected for: Corroded areas, bad dents, and defects in welds; defects in piping, valves, and gaskets; and other conditions, including leakage, which indicate weakness in the tank that might render it unsafe for transportation service.

(2) Devices for tightening manhole covers must be operative and leakage at manhole covers and gaskets must be corrected.

(3) Spring-loaded safety-relief valves rated in excess of 7 p.s.i.g. shall be removed from the cargo tank and tested.

(4) All emergency devices and valves must be free from corrosion, distortion, and any damage which will prevent their normal operation.

(5) Missing or loose bolts or nuts on any flanged connection or blank flange must be replaced or tightened.

(6) Required markings on the tank shall be legible.

(7) The entire vehicle shall be inspected for and comply with the Motor Carrier Safety Regulations, Part 393, Chapter III, of this title.

(c) *Hydrostatic or pneumatic testing requirements*. In addition to the visual inspection requirements as contained in paragraph (b) of this section, hydrostatic or pneumatic testing of cargo tanks (or compartments) is required to be conducted in accordance with the provisions contained in paragraph (d) of this section to qualify as an authorized container if:

(1) The cargo tank has been out of service (transporting dangerous articles) 1 year or more, or

(2) The cargo tank has been involved in an accident in which it may have been dented, torn, or otherwise damaged so as to affect its product retention integrity, or

(3) The shell of the cargo tank as originally manufactured has been modified, or

(4) The cargo tank is operating under special permit authorization. Such tanks shall be hydrostatically tested once every calendar year unless otherwise provided for in the special permit, and shall successfully fulfill the requirements set forth in paragraph (d) of this section. No two such required tests shall be closer than 6 months.

(d) *Hydrostatic or pneumatic testing procedure*. The requalification as an authorized container of cargo tanks (or compartments) required to be hydrostatically or pneumatically tested in accordance with paragraph (a) of this section shall be based on successfully meeting the requirements of this paragraph.

(1) *General*. (i) If a cargo tank is compartmented each compartment shall be similarly tested with the adjacent compartment empty and at atmospheric pressure.

(ii) All closures shall be in place while the test is being made. During the test all relief devices shall be clamped, plugged or otherwise rendered inoperative. Relief devices shall be returned to their operative condition immediately after the tests are completed.

(iii) The tank or compartment must hold the prescribed pressure for at least 10 minutes. All tank valves, piping, and other accessories in communication with the lading must be pressure tested and proven tight at the tank design pressure.

(iv) All pressure bearing portions of the heating system of a cargo tank (or compartment) employing such media as steam or hot water for heating the lading shall be tested under hydrostatic pressure and proven to be tight at 14.06 kg./sq. cm (200 psig). Systems employing flues for

heating the lading shall be suitably tested to insure against product leakage into the flues or into the atmosphere.

(2) *Hydrostatic test*. For Hydrostatic testing, the tank (including its domes, if any) must be completely filled with water or a liquid having a viscosity similar to water. Pressure must be gauged at the top of the tank applied in accordance with Table I following paragraph (d)(3) of this section.

(3) *Pneumatic test*. Pneumatic pressure must be applied in accordance with Table I of this paragraph. During the pneumatic test the entire surface of all joints under pressure must be coated with a solution of soap and water, heavy oil, or other materials suitable for the purpose of foaming or bubbling to indicate the presence of leaks. Other methods equally sensitive for determining leaks may be used.

TABLE I

Container type:	*Test pressure KG/SQ. CM.*
MC 300, 301, 302, 303, 305, 306	0.2109 (3 psig)
MC 304, 307	1.76[1] (25[1] psig)
MC 310, 311, 312	0.2109[1] (3[1] psig)

[1]Or 1½ times design pressure whichever is greater.

(4) *Required results*. A cargo tank (or compartment) required to be hydrostatically or pneumatically tested in accordance with paragraph (a) of this section may not be returned to service as a specification cargo tank unless it has successfully retained the applicable test pressure (see Table I in paragraph (d) (3) of this section) without leakage, undue distortion, excessive permanent expansion, or evidence of impending failure. The suitability of any repairs shall be determined by the same method of test.

(i) Cargo tanks (or compartments) with heating systems shall successfully withstand the hydrostatic pressure and examination specified in paragraph (d) (1) (iv) of this section.

(e) *Compressed gas cargo tanks, specifications MC 330 and MC 331*. Each cargo tank constructed in compliance with specification MC 330 or MC 331 (§ 178.337 of this subchapter) must be inspected and tested in accordance with § 173.33 of this subchapter.

(f) *Reporting requirements*. Each motor carrier shall file with the Director, Bureau of Motor Carrier Safety, Federal Highway Administration, Department of Transportation, Washington, D.C. 20590, a written listing of all MC 330 and MC 331 cargo tanks he has in service. Each motor carrier, upon placing in service or withdrawing from service any MC 330 and MC 331 cargo tank (other than a cargo tank used in interchange service which is reported upon by another carrier), shall file a supplemental report with the Bureau.

(1) The initial listing and each subsequent report must include the following information:

(i) The carrier's name, address, and telephone number.

(ii) One of the following statements: "Cargo tank placed in service" or "Cargo tank withdrawn from service," as appropriate, followed by the date of placement or removal;

(iii) The carrier's equipment number, manufacturer's name, manufacturer's serial number, specification MC 330 or MC 331, and "QT" (quenched and tempered) or "NQT" (not quenched and tempered).

(2) A copy of each report required by this paragraph must be retained by the carrier at its principal place of business during the period the tank is in the carrier's service and for 1 year thereafter. However, upon a written request to, and with the approval of, the Director, Regional Motor Carrier Safety Office, for the region in which a motor carrier has his principal place of business, the carrier may maintain the reports at a regional or terminal office.

(g) *Special testing required by the Department*. Upon the showing of probable cause of the necessity for retest, the Department may require any cargo tank to be retested at any time in accordance with the requirements prescribed for its periodic retest.

(h) *Test date markings*. The month and year of the last test must be durably and legibly marked on the tank in letters not less than 1¼ inches high, on the right side near the front. These markings must be near the metal certification plate, except on any tank having the plate other than on the right side near the front.

(i) *Withdrawal of certification*. If, as the result of an accident or for any other reason a cargo tank no longer meets the applicable specification, the carrier shall remove the metal certification plate or make it illegible (see § 173.24(c)(1)(v) of this subchapter). The details of the conditions necessitating withdrawal of the certification must be recorded and signed on the written certificate for that cargo tank. The vehicle owner shall retain the certificate for at least 1 year after withdrawal of the certification.

KEY: Existing rules are printed in standard type face. Proposed additions to existing rules are printed in **boldface**, while proposed deletions from existing rules are printed within [single brackets]. Additions to proposed rules are **underlined and boldfaced**, while deletions from proposed rules are printed within [[double brackets]].

Subpart C—Loading and Storage Chart of Hazardous Materials

§ 177.848 Loading and storage chart of hazardous materials.

(a) Hazardous materials must not be loaded, transported or stored together, except as provided in the Loading and Storage Chart of Hazardous Materials shown in this section.

The following table shows the hazardous materials which must not be loaded or stored together. The letter X at an intersection of horizontal and vertical columns shows that these articles must not be loaded or stored together, for example: Detonating fuzes class A, with or without radioactive components g horizontal column must not be loaded or stored with high explosives or propellant explosives, class A b vertical column.		a	b	c	d	e	f	g	1	2	3	4	5	6	7	8	9	10	11	12	13	14	15	
		Low explosives or black powder	High explosives or propellant explosives	Initiating or priming explosives, wet; Diazodinitrophenol, fulminate of mercury, guanyl nitrosamino guanyllidene hydrazine, lead azide, lead	Blasting caps, with or without safety fuse (including electric blasting caps), detonating primers	Ammunition for cannon with explosive projectiles, gas projectiles, smoke projectiles, incendiary projectiles, illuminating projectiles or shell; ammunition for small arms with incendiary projectiles; ammunition for small arms with explosive projectiles; rocket ammunition with explosive projectiles, gas projectiles, smoke projectiles, incendiary projectiles, illuminating projectiles; boosters (explosive); bursters (explosive); and supplementary charges (explosive) without detonators [4] [4]	Explosive projectiles; bombs; torpedoes; mines; rifle or hand grenades (explosive); jet thrust units (jato), class A; igniters, jet thrust, class A; rocket motors, class A; igniters, rocket motor, class A [4]	Detonating fuzes, class A, with or without radioactive components	Ammunition for cannon with empty, inert-loaded or solid projectiles, or without projectiles; rocket ammunition with empty, inert-loaded or solid projectiles	Propellant explosives, class B; jet thrust units (jato), class B; igniters, jet thrust, class B; rocket motors, class B; igniters, rocket motor, class B; starter cartridges, jet engine, class B	Fireworks special or railway torpedoes	Small arms ammunition, or cartridges, practice ammunition.	Primers for cannon or small arms, empty cartridge bags—black powder igniters, empty cartridge cases, primed, empty grenades, primed, combination primers or percussion caps, toy caps, explosive cable cutters, explosive rivets	Percussion fuzes, tracer fuzes or tracers	Time, combination or detonating fuzes, class C	Cordeau detonant fuse, safety squibs, fuse lighters, fuse igniters, delay electric igniters, electric squibs, instantaneous fuse or igniter cord	Fireworks, common,	Flammable liquids or flammable gases; Flammable liquid or flammable gas label.	Flammable solids or oxidizing materials, Flammable solid, oxidizer, or organic peroxide label.	Corrosive liquids; Corrosive label.	Nonflammable gases; Nonflammable gas label.	Poisonous gases or liquids, in tank car tanks, cylinders, projectiles or bombs, poison gas label	Radioactive materials	
CLASS A EXPLOSIVES																								
Low explosives or black powder	(a)		----	X	----	----	----	----	----	----	X	----	----	----	----	----	X	X	X	X	X	X	X [1]	
High explosives or propellant explosives, class A	(b)		----	X	X [3]	----	----	X	----	----	X	----	----	----	----	----	X	X	X	X	X	X	X [1]	
Initiating or priming explosives, wet; Diazodinitrophenol, fulminate of mercury, guanyl nitrosamino guanyllidene hydrazine, lead azide, lead																								

styphnate, nitro mannite, nitroguanidine pentaerythrite tetranitrate, tetrazene, lead mononitroresorcinate	(c)	X	X		X	X	X	X	X	X	X	X	X	X	X	X	X	X	X	X	X	X	X	X	[f]X
Blasting caps, with or without safety fuse (including electric blasting caps), detonating primers	(d)		[e]X	X		X	X				[e]X						[e]X	[e]X	[e]X	[e]X	[e]X	X	[f]X
Ammunition for cannon with explosive projectiles, gas projectiles, smoke projectiles, incendiary projectiles, illuminating projectiles or shell ammunition for small arms with explosive bullets, or ammunition for small arms with explosive projectiles, or rocket ammunition with explosive projectiles, gas projectiles, smoke projectiles, incendiary projectiles, illuminating projectiles; and boosters (explosive), bursters (explosive), or supplementary charges (explosive) without detonators [g]	(c)			X	X			X			X							X	X	X	X	X	X	[f]X
Explosive projectiles, bombs, torpedoes, or mines, rifle or hand grenades (explosive), jet thrust units (jato), explosive, class A, or igniters, jet thrust (jato), explosive, class A [g]	(f)			X	X			X			X							X	X	X	X	X	X	[f]X
Detonating fuzes, class A, with or without radioactive components	(c)		X	X		X	X				X							X	X	X	X	X	X	[f]X
CLASS B EXPLOSIVES																									
Ammunition for cannon with empty, inert-loaded or solid projectiles, or without projectiles, or rocket ammunition with empty projectiles, inert-loaded or solid projectiles or without projectiles	1			X																	[h]X		X	
Propellant explosives, class B, jet thrust units (jato), class B, igniters, jet thrust (jato), class B, or starter cartridges, jet engine, class B	2			X																	[h]X		X	
Fireworks, special or railway torpedoes	3	X	X	X	[e]X	X	X	X															X		

See footnotes at end of table.

Subpart C—Loading and Storage Chart of Hazardous Materials—Continued

§ 177.848 Loading and storage chart of hazardous materials—Continued

The following table shows the hazardous materials which must not be loaded or stored together.

The letter X at an intersection of horizontal and vertical columns shows that these articles must not be loaded or stored together, for example: Detonating fuzes class A, with or without radioactive components g horizontal column must not be loaded or stored with high explosives or propellant explosives, class A b vertical column.

		Low explosives or black powder	High explosives or propellant explosives, class A	Initiating or priming explosives, wet: Diazodinitrophenol, fulminate of mercury, guanyl nitrosamino guanylidene hydrazine, lead azide, lead styphnate, nitro mannite, nitrosoguanidine, pentaerythrite tetranitrate, tetrazene, lead mononitroresorcinate	Blasting caps, with or without safety fuse (including electric blasting caps), detonating primers	Ammunition for cannon with explosive projectiles, gas projectiles, smoke projectiles, incendiary projectiles, illuminating projectiles or shell, ammunition for small arms with explosive bullets, or ammunition for small arms with explosive projectiles, or rocket ammunition with explosive projectiles, gas projectiles, smoke projectiles, incendiary projectiles, illuminating projectiles; and boosters (explosive), bursters (explosive), or supplementary charges (explosive) without detonators [c] [d]	Explosive projectiles, bombs, torpedoes, or mines, rifle or hand grenades (explosive), jet thrust units (jato), explosive, class A or igniters, jet thrust (jato), explosive, class A [e]	Detonating fuzes, class A, with or without radioactive components	Ammunition for cannon with empty, inert-loaded or solid projectiles, or without projectiles, or rocket ammunition with empty projectiles, inert-loaded or solid projectiles or without projectiles	Propellant explosives, class B, jet thrust units (jato), class B, igniters, jet thrust (jato), class B, or starter cartridges, jet engines, class B	Fireworks, special or railway torpedoes	Small arms ammunition, or cartridges, practice ammunition	Primers for cannon or small arms, empty cartridge bags—black powder igniters, empty cartridge cases, primed, empty grenades, primed, combination primers or percussion caps, toy caps, explosive cable cutters, explosive rivets	Percussion fuzes, tracer fuzes or tracers	Time, combination or detonating fuzes, class C	Cordeau detonant fuse, safety squibs, fuse lighters, fuse igniters, delay electric igniters, electric squibs, instantaneous fuse or igniter cord	Fireworks, common	Flammable liquids or compressed flammable gases, red label	Flammable solids or oxidizing materials, yellow label	Acids or corrosive liquids, white label	Compressed nonflammable gases, green label	Poisonous gases or liquids in tank car tanks, cylinders, projectiles or bombs, poison gas label	Radioactive materials
		a	b	c	d	e	f	g	1	2	3	4	5	6	7	8	9	10	11	12	13	14	15
CLASS C EXPLOSIVES																							
Small arms ammunition, or cartridges, practice ammunition	4			X																			
Primers for cannon or small arms, empty cartridge bags—black powder igniters, empty cartridge cases, primed, empty grenades, primed, combination primers or percussion caps, toy caps, explosive cable cutters, explosive rivets	5			X																			
Percussion fuzes, tracer fuzes or tracers	6			X																			

Time, combination or detonating fuzes, class C	7			X																					
Cordeau detonant fuse, safety squibs, fuse lighters, fuse igniters, delay electric igniters, electric squibs, instantaneous fuse or igniter cord	8			X																					
Fireworks, common	9	X	X	X	[a]X	X	X	X																X	
OTHER DANGEROUS ARTICLES																									
Flammable liquids or flammable gases; Flammable liquid or flammable gas label	10	X	X	X	[a]X	X	X	X																X	
Flammable solids or oxidizing materials; Flammable solid, oxidizer, or organic peroxide label	11	X	[e]X	X	[a][e]X	X	X	X															[b]X		X	
Corrosive liquids; Corrosive label	12	X	X	X	[a]X	X	X	X	[b]X	[b]X												[b]X			X	
Nonflammable gases; Nonflammable gas label	13	X	X	X	[a]X	X	X	X																	
Poisonous gases or liquids in tank car tanks, cylinders, projectiles or bombs, poison gas label	14	X	X	X	X	X	X	X	X	X	X						X	X	X	X					
Radioactive materials	15	[f]X	[f]X	[f]X	[f]X	[f]X	[f]X	[f]X																	

[a] Blasting caps or electric blasting caps in quantities not exceeding 1,000 caps may also be loaded and transported with articles named in vertical and horizontal columns 3, 9, 10, 11, 12, and 13. Loading and transportation of blasting caps or electric blasting caps except as prescribed in § 177.835, in any quantity, with articles named in vertical or horizontal columns b, c, e, or f is prohibited.

[b] Corrosive liquids must not be loaded above or adjacent to flammable solids, oxidizing materials, ammunition for cannon with or without projectiles, or propellant explosives, except that shippers loading truckload shipments of corrosive liquids and flammable solids or oxidizing materials packages and who have obtained prior approval from the Department may load such materials together when it is known that the mixture of contents would not cause a dangerous evolution of heat or gas.

[c] Explosives, class A and explosives, class B must not be loaded or stored with chemical ammunition containing incendiary charges or white phosphorus either with or without bursting charges.

[d] Bursters (explosive), boosters (explosive), or supplementary charges (explosive) without detonators when shipped by, to or for the Departments of the Army, Navy, and Air Force of the United States Government may be loaded with any of the articles named except those in columns c, d, 3, 9, 10, 11, 12, 13, 14, and 15.

[e] Does not include nitro carbo nitrate or ammonium nitrate, fertilizer grade, which may be loaded, transported or stored with high explosives or with blasting caps or electric blasting caps, and detonating primers.

[f] Normal uranium, depleted uranium, and thorium metal in solid form may also be loaded and transported with articles named in vertical and horizontal columns a, b, c, d, e, f, and g.

NOTE 1: Charged electric storage batteries must not be loaded in the same vehicle with explosives, class A.

NOTE 2: Cyanides or cyanide mixtures must not be loaded or stored with acids or corrosive liquids.

NOTE 3: Gas identification sets may be loaded and transported with all articles named except those in column c.

NOTE 4: Nitric acid, when loaded in the same motor vehicle with other acids or other corrosive liquids in carboys, must be separated from the other carboys. A 2 by 6 inch plank, set on edge, should be nailed across the motor vehicle floor at least 12 inches from the nitric acid carboys, and the space between the plank and the carboys of nitric acid should be filled with sand, sifted ashes, or other incombustible absorbent material.

NOTE 5: Smokeless powder for small arms in quantities not exceeding 100 pounds net weight in one motor vehicle shall be classed as a flammable solid for purposes of transportation when approved for such classification by the Bureau of Explosives.

Rules as Proposed

SW 1 (12)

(12) [Hazardous] **Special** Infectious Waste. Waste originating from the diagnosis, care or treatment of a person or animal that has been or may have been exposed to a contagious or infectious disease. [Hazardous] **special** infectious waste includes, but is not limited to,

(a) All wastes originating from persons placed in isolation for control and treatment of an infectious disease.

(b) Bandages, dressings, casts, catheters, tubing, and the like, which have been in contact with wounds, burns, or surgical incisions and which are suspect or have been medically identified as hazardous.

(c) All anatomical waste, including human and animal parts or tissues removed surgically or at autopsy.

(d) Laboratory and pathology waste of an infectious nature which has not been autoclaved.

(e) Any other waste, as defined by the State Board of Health, which, because of its [hazardous] **infectious** nature, requires handling and disposal in a manner prescribed for (a) through (d).

SW 1 (13)

[(13) Hazardous Wastes. Waste materials that are (a) toxic or poisonous; (b) corrosive; (c) irritating or sensitizing; (d) radioactive; (e) hazardous infectious; (f) explosive; or (g) flammable and that present a significant hazard to human health and the environment. They include, but are not limited to, those materials and concentrations of materials that are determined to be toxic by the U.S. Secretary of Health, Education, and Welfare pursuant to Section 10.6, of the Occupational Safety and Health Act of 1970 (Public Law 91-596).]

SW-2 (4)

[(4) Toxic or hazardous wastes shall be stored in the proper containers which are adequately labeled in a safe location and in compliance with the regulations of federal, state and local governments, and their regulatory agencies.]

SW 3 (4)

[(4) Vehicles and containers used for the collection and transportation of toxic or hazardous wastes shall be durable, enclosed and leakproof and shall be constructed, loaded, moved and unloaded in a safe manner and in compliance with the regulations of federal, state and local governments and their regulatory agencies.]

SW 4 Intermediate and Final Disposal of Solid Waste

Open burning is prohibited at all intermediate and final solid waste disposal sites, except as shall be allowed by any regulations of the Agency now or hereafter adopted.

Solid waste shall not be deposited at any intermediate or final solid waste disposal site in such a manner that material or leachings therefrom may cause pollution of ground or surface waters.

A person shall make an intermediate or final disposal of any solid waste, only at a site or facility for which a permit has been issued by the Agency unless otherwise provided by these regulations. Permits shall not be required for sites used for the disposal of solid waste from only a single family or household, a member of which is the owner, occupant or lessee of the property, under these regulations, but these shall be operated and maintained in a nuisance-free, pollution-free and aesthetic manner consistent with the intent of these regulations.

[Disposal of toxic and hazardous wastes shall be in a safe and pollution-free manner and in compliance with the regulations of federal, state and local governments and their regulatory agencies.]

SW 6 (2) (r)

(r) A permanent sign, identifying the operation and showing the permit number of the site, and indicating the hours and days the site is open for public use, rates, [hazardous wastes information,] the penalty for nonconforming dumping, and other pertinent information, shall be posted at the site entrance.

SW 6 (2) (v)

(v) The following shall not be acceptable for deposit in sanitary landfills except in amounts normal in household waste:

(i) Liquids

(ii) Any of the following: digested sewage sludges, lime sludges, grit chamber cleanings, bar screenings and other sludges, unless approved by the Director. Approval will be based on consideration of such factors as chemical composition, free moisture content and workability.

(iii) In no case will **special infectious waste,** raw sewage sludge, raw animal manure or septic tank pumpings be acceptable.

[(iv) Hazardous wastes as identified by the Agency.]

(v) Other substances that may be deemed unacceptable by the Agency.

APPENDIX K

TYPE 3 - INLAND SHALLOW FRESH MARSHES. The soil is usually waterlogged during the growing season; often it is covered with as much as 6 inches or more of water. Vegetation includes grasses, bulrushes, spikerushes, and various other marsh plants such as cattails, arrowheads, pickerelweed, and smartweeds. Common representatives in the North are reed, whitetop, rice cutgrass, carex, and giant burreed. In the Southeast, maidencane, sawgrass, arrowhead, and pickerelweed are characteristic. These marshes may nearly fill shallow lake basins or sloughs, or they may border deep marshes on the landward side. They are also common as seep areas on irrigated lands.

Marshes of this type are used extensively as nesting and feeding habitat in the pothole country of the North Central States and elsewhere. In combination with deep fresh marshes (Type 4), they constitute the principal production areas for waterfowl. Florida and Georgia are the only States where the majority of the shallow fresh marshes are considered to be of lesser importance to waterfowl. Florida alone contains more than 2 million acres of this type.

Flyway area:	Acres
1. Pacific north	33,700
2. Pacific south	64,100
3. Central north	817,600
4. Central south	84,600
5. Mississippi north	758,500
6. Mississippi south	15,300
7. Atlantic north	35,900
8. Atlantic south	2,159,900

TYPE 4 - INLAND DEEP FRESH MARSHES. The soil is covered with 6 inches to 3 feet or more of water during the growing season. Vegetation includes cattails, reeds, bulrushes, spikerushes, and wildrice. In open areas, pondweeds, naiads, coontail, watermilfoills, waterweeds, duckweeds, waterlilies, or spatterdocks may occur. Waterhyacinth and waterprimroses form surface mats in some localities in the Southeast. These deep-marshes may almost completely fill shallow lake basins, potholes, limestone sinks, and sloughs, or they may border open water in such depressions.

Deep fresh marshes constitute the best breeding habitat in the country, and they are also important feeding places. In the Western States they are heavily used by migrating birds,

especially diving ducks. Florida and Texas are the only States in which the vast majority of these marshes are not rated as being of primary importance to waterfowl.

Flyway area:	Acres
1. Pacific north	92,500
2. Pacific south	62,500
3. Central north	686,500
4. Central south	46,800
5. Mississippi north	427,700
6. Mississippi south	21,500
7. Atlantic north	25,700
8. Atlantic south	984,100

TYPE 5 - INLAND OPEN FRESH WATER. Shallow ponds and reservoirs are included in this type. Water is usually less than 10 feet deep and is fringed by a border of emergent vegetation. Vegetation (mainly at water depths of less than 6 feet) includes pondweeds, naiads, wildcelery, coontail, watermilfoils, muskgrasses, waterlilies, spatterdocks, and (in the south) water-hyacinth.

In the pothole country of the North Central States, Type 5 areas are used extensively as brood areas when, in midsummer and late summer, the less permanent marshes begin to dry out. The borders of such areas are used for nesting throughout the Northern States. Where vegetation is plentiful, they are used in all sections of the country as feeding and resting areas by ducks, geese, and coots, especially during the migration period.

Flyway area:	Acres
1. Pacific north	40,500
2. Pacific south	51,900
3. Central north	676,800
4. Central south	87,100
5. Mississippi north	1,000,200
6. Mississippi south	186,500
7. Atlantic north	12,000
8. Atlantic south	541,500

SW 1 APPLICABILITY, DEFINITIONS, AND GENERAL CONDITIONS FOR SOLID WASTE COLLECTION, TRANSPORTATION AND DISPOSAL, SEVERABILITY AND VARIANCES.

Paragraph (12) of the Definition is amended to read:

(12) Special Infectious Waste. Waste originating from the diagnosis, care or treatment of a person or animal that has been or may have been exposed to a contagious or infectious disease. Special infectious waste includes, but is not limited to,

(a) All wastes originating from persons placed in isolation for control and treatment of an infectious disease.

(b) Bandages, dressings, casts, catheters, tubing, and the like, which have been in contact with wounds, burns, or surgical incisions and which are suspect or have been medically identified as hazardous.

(c) All anatomical waste, including human and animal parts or tissues removed surgically or at autopsy.

(d) Laboratory and pathology waste of an infectious nature which has not been autoclaved.

(e) Any other waste, as defined by the State Board of Health, which, because of its infectious nature, requires handling and disposal in a manner prescribed for (a) through (d).

Paragraph (13) of the Definition is omitted.

SW 2 SOLID WASTE STORAGE.

Paragraph (4) is omitted.

SW 3 COLLECTION AND TRANSPORTATION OF SOLID WASTE

Paragraph (4) is omitted.

SW 4 INTERMEDIATE AND FINAL DISPOSAL OF SOLID WASTE

SW 4 is amended to read:

Open burning is prohibited at all intermediate and final solid waste disposal sites, except as shall be allowed by any regulations of the Agency now or hereafter adopted.

Solid waste shall not be deposited at any intermediate or final solid waste disposal site in such a manner that material or leachings therefrom may cause pollution of ground or surface waters.

A person shall make an intermediate or final disposal of any solid waste, only at a site or facility for which a permit has been issued by the Agency unless otherwise provided by these regulations. Permits shall not be required for sites used for the disposal of solid waste from only a single family or household, a member of which is the owner, occupant or lessee of the property, under these regulations, but these shall be operated and maintained in a nuisance-free, pollution-free and aesthetic manner consistent with the intent of these regulations.

SW 6 SANITARY LANDFILL

Paragraph (2) (r) is amended to read:

(r) A permanent sign, identifying the operation and showing the permit number of the site, and indicating the hours and days the site is open for public use, rates, the penalty for nonconforming dumping, and other pertinent information, shall be posted at the site entrance.

Paragraph (2) (v) is amended to read:

(v) The following shall not be acceptable for deposit in sanitary landfills execpt in amounts normal in household waste:

(i) Liquids

(ii) Any of the following: digested sewage sludges, lime sludges, grit chamber cleanings, bar screenings and other sludges, unless approved by the Director. Approval will be based on consideration of such factors as chemical composition, free moisture content and workability.

(iii) In no case will special infectious waste, raw sewage sludge, raw animal manure or spetic tank pumpings be acceptable.

(iv) Other substances that may be deemed unacceptable by the Agency.

Paragraph (2) (w) is omitted.

Paragraph (3) (c) (ii) is amended to read:

(ii) A Development Plan of the site and immediately adjacent area

showing dimensions, contours, at contour intervals of two feet or less, soil boring locations with surface elevations and present and planned pertinent features, including but not limited to roads, screening, buffer zone, fencing, gate, shelter and equipment buildings, surface water diversion and drainage, and water monitoring system. The development plan shall show progressive development of trench and/or area fills and any phase construction. The scale of the development plan shall not be greater than 200 feet per inch.

The development plan shall include consideration of the ultimate land use, for example, pre-planned building islands, not to be used for landfilling or refuse.

SW 7 INCINERATION

The first paragraph is amended to read:

This regulations applies only to existing and new incinerators having a capacity greater than 6,000 pounds per hour: All incinerators shall be designed and operated in a manner to conform to emission limitations of Regulation APC 7 and other Air Pollution Control Regulations of the Agency now or hereafter adopted. All incinerators shall have adequate disposal of liquid wastes. Any discharge to surface or ground waters of the state must meet the Agency's regulations of water quality or effluent standards now or hereafter adopted. Residue from all incinerators must be disposed of in conformance with these regulations.

APPROVED AS TO FORM AND LEGALITY

OCT. 5 1978

_____ 19____

WARREN SPANNAUS, ATTORNEY GENERAL

BY Lee E. Shuly

SPECIAL ASSISTANT ATTORNEY GENERAL

STATE OF MINNESOTA
DEPARTMENT OF STATE
FILED
OCT 5 - 1978
Joan Anderson Howe
Secretary of State

11:35 AM

STATE OF MINNESOTA
OFFICE OF THE ATTORNEY GENERAL
ST. PAUL 55155

WARREN SPANNAUS
ATTORNEY GENERAL

TELEPHONE
(612) 296-6196

October 20, 1978

Dean Carl A. Auerbach
University of Minnesota Law School
285 Law Building
229 19th Avenue South
Minneapolis, Minnesota 55455

Dear Dean Auerbach:

As you requested, please find enclosed copies of the Pollution Control Agency documents relating to identification, labelling, classification, storage, collection, transportation and disposal of hazardous wastes.

If you have any questions, do not hesitate to call me.

Very truly yours,

LEE E. SHEEHY
Special Assistant
Attorney General

LES:mb

Enclosure

STATE OF MINNESOTA
OFFICE OF HEARING EXAMINERS
ROOM 300 – 1745 UNIVERSITY AVENUE
ST. PAUL, MINNESOTA 55104
(612) 296-6910

August 3, 1978

Ms. Sandra Gardebring
Executive Director
Minnesota Pollution Control Agency
1935 West County Road B-2
Roseville, Minnesota 55113

Re: In the Matter of the Proposed Adoption of Rules Governing the Identification, Labelling, Classification, Storage, Collection, Transportation and Disposal of Hazardous Wastes and Amendments to Minnesota Regulations SW 1, 2, 3, 4, 6 and 7. Docket No. PCA-78-003-WS.

Dear Ms. Gardebring:

Enclosed is the Report of the Chief Hearing Examiner which has been completed pursuant to Minn. Rules HE 107 and HE 108.

Yours very truly,

DUANE R. HARVES
Chief Hearing Examiner

DRH:sw
Enc.

cc: Mr. Lee Sheehy
Special Assistant
Attorney General

AN EQUAL OPPORTUNITY EMPLOYER

Pages 497-668

State Register

STATE OF MINNESOTA

HIGHLIGHTS:

Routes for High Voltage Transmission Lines
—Emergency Rules from the Environmental Quality Board

Sites for Electric Generating Plants
—Proposed Rules from the Environmental Quality Board

New Industrial Cost Recovery System
—Proposed Rules from the Metropolitan Waste Control Commission

Disposal of Hazardous Waste
—Proposed Rules from the Pollution Control Agency

Revised Merit System Salaries
—Proposed Rules from the Department of Public Welfare

The Minnesota Unclaimed Property Act
—Proposed Temporary Rules from the Office of the State Treasurer

VOLUME 2, NUMBER 11

SEPTEMBER 19, 1977

Subscribers Hotline

Phone inquiries regarding subscriptions should be directed to Marjorie Borchard at (612) 296-8239.

How to Cite

Cite all material in the *State Register* by Volume number and page number.
Example: Volume 2, *State Register*, page 94 (short form: 2 S.R. 94).

State Register

Individual copies of the *State Register* may be purchased at either the Office of the State Register or the Documents Section, for $2.25.

Change of address notices, subscription or single-copy orders and undelivered copies should be sent to:

THE OFFICE OF THE STATE REGISTER
95 Sherburne, Suite 203
St. Paul, Minnesota 55103
296-8239

Materials published in the *State Register* are public records under Minn. Stat. § 15.17. The State of Minnesota has reserved a copyright to cross reference tables, tables of contents, indices, numerical lists and codification guides, as provided in RGSTR 7 of the rules of the Office of the State Register.

The *State Register* is the official publication of the State of Minnesota. It contains all executive orders, rules and notices filed with the Office of the State Register as of noon of the second Wednesday preceding the Monday of publication. The text of documents published in the *State Register* is to be accorded the following presumptions:

(1) The rule or order was duly adopted, issued or promulgated;

(2) The rule or order was duly filed with the Secretary of State and available for public inspection; and

(3) The copy of the rule or order published in the *State Register* is a true copy of the original.

Judicial notice shall be taken of material published in the *State Register*.

The *State Register* is published weekly, on Monday, by the State of Minnesota, Department of Administration, Office of the State Register, Suite 203, 95 Sherburne Avenue, St. Paul, Minnesota 55103, pursuant to Minn. Stat. § 15.0411. In accordance with expressed legislative intent that the *State Register* be self-supporting, the subscription rate has been established at $110 per year, and $85 per year for additional subscriptions, postpaid to points in the United States. Second class postage paid at St. Paul, Minnesota, Publication Number 326630.

Copyright © 1977 State of Minnesota

Rudy Perpich
Governor

Richard L. Brubacher
Commissioner
Department of Administration

James T. Clancy
Editor

Louann Wood
Editor

CONTENTS

RULES

Environmental Quality Board

Emergency Rules Governing High Voltage Transmission Line Routes 501

Department of Public Welfare

Adopted Temporary Rule Governing Welfare Per-Diem Rates for Nursing Home Providers 507

PROPOSED RULES

Environmental Quality Board

Proposed Rules Governing Transmission Line Routes and Sites for Electric Generating Plants ... 508

Metropolitan Waste Control Commission

Proposed Rules Establishing an Industrial Cost Recovery System 518

Pollution Control Agency

Proposed Rules Governing Identification, Labeling, Classification, Storage, Collection, Transportation and Disposal of Hazardous Waste 521

Department of Public Welfare

Proposed Rules Governing Welfare Per-Diem Rates for Nursing Home Providers 617
Proposed Rules Governing Merit System Classification Specifications and Related Salaries 633

Office of the State Treasurer

Proposed Temporary Rules Governing the Minnesota Unclaimed Property Act 662

OFFICIAL NOTICES

State Arts Board

Notice of Public Hearing on Grants Program for Art Organizations 664

Pollution Control Agency

Notice of Hearing on Bemidji's Municipal Wastewater Treatment Facility 664

MCAR AMENDMENTS AND ADDITIONS

List of amendments and additions to rules contained in the Minnesota Code of Agency Rules (MCAR) as published in the State Register, Volume 2:

TITLE 1 CONSTITUTIONAL OFFICES

Part 3 State Treasurer 662

TITLE 2 ADMINISTRATION

Part 1 Administration Department

SBC 6001-6006 (adopted) 173

Part 2 Personnel Department

Persl 4, 9, 11-12, 19, 21-22, 24, 28-29, 31, 39-40, 46-47, 61, 65-66, 68, 82, 85, 97, 106, 109, 129, 131, 133, 135-136, 141, 144, 160-161, 166-168, 170, 172, 181-182, 203, 224-254 (proposed) 254
Persl 9, 18-19, 24, 31, 39, 61, 109, 131, 141, 144, 181, 203 (proposed temporary rules) .. 50
Persl 9, 18-19, 24, 31, 39, 61, 109, 131, 135-136, 141, 144, 181, 203 (adopted temporary rules) 308
Persl 275-285 (proposed) 92

TITLE 3 AGRICULTURE

Part 1 Agriculture Department

3 MCAR §§ 1.0563-1.0568 (proposed) 248
Emergency Rules 1, 2 (adopted emergency rules) 128

Part 2 Livestock Sanitary Board

3 MCAR §§ 2.002, 2.005, 2.042 (proposed) .. 194

TITLE 4 COMMERCE

Part 1 Commerce Department

BD 226, 227 (proposed) 177
Ins 90, 92 (proposed) 183
Ins 180-188 (proposed) 178

Part 6 Accountancy Board

Accy 5, 8, 12, 18-19, 30, 40, 43-46, 50, 60, 63, 70-74, 80-84, 110-112, 120-121, 140-141, 150-151, 220-429 (adopted) 145

Part 8 Barber Examiners Board

BE 1-15, 26-31, 33, 42-45, 56-66, 77-79 (proposed) 410

Part 10 Cosmetology Board

MSBC 1-8, 20-29, 40-42, 60-66 (proposed) 35
MSBC 64 (errata) 164

MCAR AMENDMENTS AND ADDITIONS

TITLE 5 EDUCATION

Part 1 Education Department

5 MCAR §§ 1.720-1.725 (proposed temporary rules) 251

Part 3 Teaching Board

5 MCAR §§ 3.001, 3.003-3.015, 3.020-3.031, 3.041, 3.050-3.054, 3.060-3.086, 3.102-3.103, 3.130 (proposed) 311

Part 5 Arts Board

MSAB 1-8 (adopted) 31

TITLE 6 ENVIRONMENT

Part 1 Natural Resources Department

NR 51, 56 (proposed) 441
NR 2600, 2610, 2620, 2630, 2640 (adopted) . . 174
NR 5020-5026 (proposed) 201
NR 5300 (proposed) 287

Part 3 Environmental Quality Board

MEQC 72, 73, 76-80, 82 (adopted emergency 501
MEQC 71-82 (proposed) 508

Part 4 Pollution Control Agency

APC 4, 11 (errata) 135
WPC 43 (proposed) 94
HW 1-10 (proposed) 521
SW 1-4, 6, 7 (proposed) 616

Part 6 Metropolitan Waste Control Commission

MWCC 2 518

TITLE 7 HEALTH

Part 1 Health Department

MHD 145-149 (emergency rules) 381
MHD 268, 279, 294, 304-306, 314-315, (proposed) 420

Part 4 Medical Board

7 MCAR § 4.012 (proposed) 309

Part 5 Nursing Board

7 MCAR §§ 5.1002-5.1004, 5.1032-5.1036, 5.1060-5.1061, 5.1063, 5.1080, 5.1091, 5.2002-5.2003, 5.2005, 5.2030-5.2036, 5.2040, 5.2050-5.2051, 5.2053, 5.2070, 5.2082 (proposed) 228

Part 7 Optometry Board

OPT 1-8 (proposed) 44

TITLE 8 LABOR

Part 1 Labor and Industry Department

LS 1-9, 12, 14-18 (proposed) 189
FEA 1, 3, 7-8, 13, 16, 22, 27, 29, 44, 57 (proposed) 187
MOSHC 1 (emergency rule) 145
MOSHC 270-283, 290-306, 310-317, 320-336 (proposed) 149

TITLE 9 LAW

Part 2 Hearing Examiners Office

HE 102-112, 203-206, 209-214, 216-218, 222 (proposed) 382
HE 401-418 (adopted temporary rules) 85
HE 401-418 (proposed) 382

TITLE 10 PLANNING

Part 1 State Planning Agency

10 MCAR §§ 1.305-1.306 (adopted temporary rules) 146

TITLE 11 PUBLIC SAFETY

Part 1 Public Safety Department

DES 94, 129-130, 140-141 (proposed) 443
MoVeh 58 (adopted) 33
MoVeh 70-82 (adopted) 145
Liq 1-3, 24-35, 38-39, 56, 67, 71-77, 83-84, 92, 95, 98-100, 123 (proposed) 96

Part 2 Corrections Department

CORR 4-12 (adopted) 84
CORR 4 (errata) 135
CORR 200-203 (emergency rules) 407

TITLE 12 SOCIAL SERVICE

Part 2 Public Welfare Department

DPW 30 (proposed temporary rule) 132
DPW 33 (proposed temporary rule) 133
DPW 47 (adopted) 353
DPW 49 (proposed temporary rule) 234
DPW 49 (proposed) 617
DPW 49 (adopted) 245
DPW 49A (adopted temporary) 507
DPW 52 (adopted) 34
DPW 94, 104, 116, 125, 128, 131-132, 140-141 (proposed) 455
DPW 125, 126, 128, 130-132, 135, 140 (proposed) 633
DPW 160 (proposed) 60
DPW 160 (proposed) 160
DPW 160 (errata) 164

Part 3 Housing Finance Agency

MHFA 1-17, 31-36, 51, 61-69, 111-115 (adopted) 306

RULES

Environmental Quality Board

Emergency Rules Governing High Voltage Transmission Line Routes

The 1977 Minnesota Legislature amended the Power Plant Siting Act of 1973 and authorized the Minnesota Environmental Quality Board to promulgate emergency rules concerning the procedures for designation of high voltage transmission line routes, including the manner and timeliness of proposing alternative routes, route designation considerations, and route exemption criteria and procedures. In addition the Board was authorized to promulgate emergency rules for revocation or suspension of a transmission line construction permit or an electric generating plant certificate of site compatibility.

On August 29, 1977 the Minnesota Environmental Quality Board adopted the following emergency rules only as they apply to high voltage transmission line routes:

MEQB 72 Definitions.

MEQB 73 Procedures for designation of a route and issuance of a construction permit.

MEQB 76 Notice.

MEQB 77 Emergency certification.

MEQB 78 Exemption of certain routes.

MEQB 79 Improvement of acquired routes and sites.

MEQB 82B Application fees.

The Board also adopted MEQB 80 Revocation and suspension as it applies to both sites and routes.

MEQB 72 Definitions. As used in these rules, the following terms have the meanings given them.

A. "Act" means the Power Plant Siting Act of 1973, as amended, Minn. Stat. § 116C.51 et seq. (1977).

B. "Board" means the Minnesota Environmental Quality Board.

C. "Construction" means any clearing of land, excavation, or other action that would adversely affect the natural environment of a site or route but does not include changes needed for temporary use of sites or routes for non-utility purposes, or uses in securing survey or geological data, including necessary boring, to ascertain foundation conditions.

D. "File" means to deliver 40 copies to the office of the chairman of the Board.

E. "High Voltage Transmission Line" (HVTL) means a conductor of electric energy and associated facilities designed for and capable of operation at a nominal voltage of 200 kilovolts or more. Associated facilities shall include, but not be limited to, insulators, towers, switching yards, substations and terminals.

F. "Large Electric Power Facilities" means high voltage transmission lines and large electric power generating plants.

G. "Large Electric Power Generating Plant" (LEPGP) means electric power generating equipment and associated facilities designed for or capable of operation at a capacity of 50,000 kilowatts or more.

H. "Large Electric Power Generating Plant Study Area" means a general area of land designated by the Board for purposes of planning for future sites.

I. "Person" means any individual, partnership, joint venture, private or public corporation, association, firm, public service company, cooperative, political subdivision, municipal corporation, government agency, public utility district, or any other entity, public or private, however organized.

J. "Public Advisor" means a staff person designated by the Board for the sole purpose of assisting and advising affected and interested citizens on how to effectively participate in the site and route designation processes.

K. "Right-Of-Way means the land interest used or proposed to be used within a route to accommodate a high voltage transmission line.

L. "Route" means the location of a high voltage transmission line between two end points. A route may have a variable width of up to 1.25 miles.

M. "Route Segment" means a portion of a route.

N. "Site" means the location of a large electric power generating plant.

KEY: Existing rules are printed in standard type face. Proposed additions to existing rules are printed in **boldface**, while proposed deletions from existing rules are printed within [single brackets]. Additions to proposed rules are **underlined and boldfaced**, while deletions from proposed rules are printed within [[double brackets]].

O. "Utility" means any entity engaged in this State in the generation, transmission or distribution of electric energy including, but not limited to, a private investor owned utility, a cooperatively owned utility, a public or municipally owned utility, or a private corporation.

MEQB 73 Procedure for designation of a route and issuance of a construction permit.

A. Content of an application for a construction permit. An application shall be filed with the Board which includes an environmental report consistent in form with a draft environmental impact statement (Minnesota Rule MEQB 30D). The application shall contain any information necessary to make the evaluation required in MEQB 73H. and the following:

1. The size and type of the proposed transmission line;

2. At least two proposed routes for the proposed transmission line;

3. An environmental analysis of each proposed route including a description of the environmental setting and the potential environmental impacts of each route;

4. The engineering and operational design concepts for the proposed transmission line;

5. A description of the construction, right-of-way preparation and maintenance procedures anticipated for the proposed transmission line;

6. The procedures and practices proposed for the ultimate abandonment and restoration of the right-of-way.

7. A listing of federal or state permits that may be required for the proposed transmission line;

8. A cost analysis of each route;

9. The certificate of need application submitted to the director of the Minnesota Energy Agency, if required by Minn. Stat. ch. 116H.

10. A statement of ownership of the utility as of the day of filing and an affidavit authorizing the applicant to act on behalf of the owners.

B. Acceptance of a construction permit application. The Board shall either accept or reject an application for a construction permit no later than 50 days after the application was filed with the Board. If the Board rejects the application, it shall at that time inform the applicant which deficiencies, if corrected, will allow the application to be accepted. On acceptance of the application, the Board shall initiate the study, public participation and hearings required by these rules. After acceptance of the application, the applicant shall provide any additional information which the Board deems necessary to process the application.

C. Route evaluation committee. Upon acceptance of an application for a construction permit, the Board may appoint a route evaluation committee consistent with the Act.

D. Public advisor. The public advisor shall be available to affected and interested citizens to advise them on how to participate in the route designation process. However, all persons given advice or aid in connection with participation in large electric power facility siting proceedings are hereby informed that the public advisor is not authorized to give legal advice or advice which may affect the legal rights of the person being advised. In no case shall any person rely to his possible legal disadvantage on such advice or information.

E. Information meetings. The Board shall hold at least one information meeting in each county through which a route is proposed to be located to explain the route designation process, present major issues and alternatives under consideration by the Board and respond to questions raised by the public.

F. Route proposals. The Board shall consider the route and route segments proposed by the applicant and may consider any other route or route segment it deems necessary. No route shall be considered at the public hearing unless approved for consideration by the Board prior to notice of the hearing thereon. All approved routes shall be identified by the Board consistent with MEQB 76D. Any proposer of a route or route segment which the Board has approved for consideration shall make an affirmative presentation of facts on the merits of the proposal at the public hearing which shall provide the Board with a basis for making a determination on that proposal.

1. The Board member agencies, power plant siting staff and the route evaluation committee may propose routes or route segments to the Board. Route proposals made by the route evaluation committee must be made no later than 105 days after acceptance of the application by the Board.

2. Any other person may propose a route or a route segment in the following manner:

a. The route or route segment must be set out specifically on the appropriate general county highway

map available from the Minnesota Department of Transportation, or on the appropriate United States Geological Survey Topographical maps.

b. The proposal must contain the data and analysis required in MEQB 73A. and MEQB 73H., except MEQB 73A.2; except where such information is the same as provided by the applicant.

c. The proposal must be presented to the chairman of the Board or his designee within 60 days of acceptance of the application by the Board.

Within 10 days of receipt of the proposal, the chairman of the Board or his designee shall determine if the proposal is adequately prepared. If the chairman of the Board or his designee determines that it is adequately prepared, he shall forward the proposal to the Board for its consideration. If the chairman of the Board or his designee determines that the proposal is not adequately prepared, he shall inform the proposer of any inadequacies in the proposal. The proposer shall have 15 days therefrom to provide additional information to the chairman of the Board or his designee. The chairman of the Board or his designee shall determine within 10 days whether the amended proposal is adequately prepared. If the chairman of the Board or his designee then determines that the proposal is not adequately prepared, the proposer may appeal to the Board to determine the adequacy of the proposal.

G. Public hearings. Public hearings held by the Board pursuant to this rule shall be held for the purpose of collecting and verifying data, and establishing a complete and accurate record upon which to base a decision. The hearings shall be conducted by an independent hearing examiner from the State Hearing Examiner's Office. The conduct of these hearings shall be as prescribed by rule adopted by the Chief Hearing Examiner.

H. Criteria for the evaluation of routes. In selecting a route and issuing a construction permit, the Board shall seek to minimize adverse human and environmental impact, maximize the efficient use of resources, and ensure continuing electric power system reliability. No route shall be designated by the Board in violation of federal or state statute or law, rule or regulation. No route shall be designated by the Board through state or national wilderness areas.

1. Designated lands. Lands designated as state and national parks and scientific and natural areas by the Congress of the United States, the Minnesota Legislature or the Commissioner of the Department of Natural Resources pursuant to Legislative directive have been set aside for the benefit of the people and for future generations. No land within any of these designated areas shall be selected as a high voltage transmission line route by the Board unless:

a. a route in a designated area would not materially damage or impair the purpose for which the land was designated; and

b. unusual circumstances exist in all alternate routes which would be more severely detrimental to humans or the environment if any alternate were selected.

Economic considerations alone shall not justify approval of these designated lands. In the event that such an area is approved, effort shall be made to minimize the harm to it.

2. Considerations for the designation of a route and issuance of a construction permit. The Board shall make an evaluation of the following considerations prior to issuance of a construction permit. In its evaluation of route alternatives, the Board shall consider the characteristics of a given geographical area, identify the potential impacts, and apply methods to mitigate adverse impacts so that it may select a route with the least adverse impact.

a. Identification of geographical characteristics and potential impacts. The Board shall identify the geographical characteristics and potential impacts in the following categories:

(1) Existing and projected human settlement, including but not limited to development patterns;

(2) Economic operations, including but not limited to agricultural, forestry and mining operations;

(3) The natural environment and public land, including but not limited to natural areas, wildlife habitat, waters, recreational lands, and lands of historic or cultural significance;

(4) Reliability, cost and accessibility.

b. Methods of mitigating impacts. The Board shall utilize the following methods in seeking to find a route with the least adverse impact:

KEY: Existing rules are printed in standard type face. Proposed additions to existing rules are printed in **boldface**, while proposed deletions from existing rules are printed within [single brackets]. Additions to proposed rules are **underlined and boldfaced**, while deletions from proposed rules are printed within [[double brackets]].

(1) Evaluation of existing land use or management plans, and established methods of resource management;

(2) Evaluation of routes along or sharing existing rights-of-way;

(3) Evaluation of routes along survey, natural division and field boundaries;

(4) Evaluation of structures capable of expansion in transmission capacity through multiple circuiting or design modifications to accommodate future high voltage transmission lines.

(5) Evaluation of alternate structure types and technologies.

I. Board action. Within one year after the Board's acceptance of a utility's application for a construction permit, the Board shall act on that application. When the Board designates a route, it shall issue a permit for the construction of a high voltage transmission line specifying the type, design, routing, right-of-way preparation and maintenance, facility construction and abandonment procedures it deems necessary with any other appropriate conditions. The Board's decision shall be made in accordance with MEQB 73H. The Board shall give the reasons for its decision in written findings of fact.

J. Construction plans. Following issuance of a construction permit, a utility shall provide the Board with a preliminary construction plan at least 60 days prior to construction which shall show that the right-of-way of the transmission line as proposed is within the route designated by the Board. The Board may suspend the 60-day time limitation if it can be shown that earlier construction will not preclude proper review of the plans. If the utility makes any changes in its preliminary construction plan, it shall notify the Board in writing of such changes.

MEQB 76 Notice.

A. Applications. Within 20 days of acceptance of any application submitted to the Board pursuant to the Act, except an exemption application, the Board shall give notice of acceptance of the application by paid advertisement in a legal newspaper of general circulation in each county in which a route or site is proposed by the applicant to be located. The notice shall include the following information:

1. Identification of the application;

2. The date of the Board's acceptance of the application;

3. A brief description of the proposed facility;

4. A map showing the routes or sites proposed in that county;

5. The name of the public advisor and the place where he can be reached;

6. Locations where the application is available to the public;

7. Procedures for proposing alternate routes or sites.

B. Information meetings. Notice and agenda of public information meetings of the Board shall be given by the Board consistent with the Act. For purposes of giving notice, a route or site proposal shall be any route or site proposed by the applicant or a route or site that is an accepted proposal under MEQB 73F.2 or 74F., or by resolution of the Board pursuant to MEQB 73F. or 74F.

C. Public hearings. Notice and agenda of public hearings shall be given by the Board consistent with the Act. For purposes of giving notice, a route or site proposal shall be any route or site proposed by the applicant or a route or site that is an accepted proposal under MEQB 73F.2. or 74F., or by resolution of the Board pursuant to MEQB 73F. or 74F.

D. Route and site proposals. Prior to public hearings held on routes and sites which the Board has approved for consideration at the public hearings consistent with these rules, the Board shall identify the routes and sites with maps published in a newspaper of general circulation in each county in which a route or site is proposed to be located showing the routes or sites in that county.

MEQB 77 Emergency certification.

A. Application. Any utility whose electric power system requires the immediate construction of a large electric power generating plant or a high voltage transmission line may apply to the Board for an emergency certificate of site compatibility or an emergency construction permit. The application for an emergency construction permit shall contain the supporting information required in MEQB 73A. and MEQB 77B. The application for an emergency certificate of site compatibility shall contain the supporting information required in MEQB 74A. and MEQB 77B.

B. Determination of an emergency. The Board shall hold a public hearing within 90 days of acceptance of an application for emergency certification to consider the following to detemine whether or not an emergency exists:

1. Any evidence offered by the Minnesota Energy Agency;

2. Whether adherence to the procedures and time schedules specified in MEQB 73I. and MEQB 74I. would jeopardize the utility's electric power system or would jeopardize the utility's ability to meet the electric needs of its customers in an orderly and timely manner;

3. Whether there remains any feasible or prudent alternative to the utility which can serve its immediate need;

4. Whether the utility is prepared to, and will upon authorization, carry out the acquisition and construction program at the maximum rate of progress.

The Board shall also establish whether the situation could have been reasonably anticipated by the utility in time to utilize the normal application procedures. If the Board finds that the utility could have reasonably anticipated the situation, the utility may be subject to the provisions of Minn. Stat. § 116C.68 (1977).

C. Board action. If the Board determines that an emergency exists, then the route or site designation procedures prescribed in MEQB 73 and MEQB 74, with the exception of MEQB 73F. and MEQB 74F., shall be followed except that the Board shall designate a route and issue an emergency construction permit or designate a site and issue an emergency certificate of site compatibility within 195 days of the application.

MEQB 78 Exemption of certain routes.

A. Application. A utility may apply to the Board to exempt the construction of a high voltage transmission line from the Act. A utility shall submit an application for exemption of a specific transmission line containing the following information:

1. The engineering design concepts;

2. The proposed location of the facility;

3. The environmental setting and impact of the proposed action;

4. A description of the plans for right-of-way preparation and construction.

B. Notice of exemption application. Within 15 days of filing with the Board an application for exemption of a certain route, the utility shall:

1. Publish a notice and description of the exemption application including, but not limited to, a map of the proposed route and the size and type of facility in a legal newspaper of general circulation in each county in which the route is proposed to be located;

2. Send a copy of the exemption application by certified mail to the chief executive of any regional development commission, county, incorporated municipality and organized town in which the route is proposed to be located; and

3. Send a notice and description of the exemption application to each owner over whose property the line may run, together with an understandable description of the procedures the owner must follow should he desire to object.

C. Objection to an exemption application. Any person who owns real property crossed by the proposed route, or any person owning property adjacent to the property crossed by the proposed route, or any affected political subdivision may file an objection with the Board within 60 days after the giving of notice under MEQB 78B stating reasons why the Board should deny the application.

D. Board action. The Board may conduct a public hearing to determine if the proposed high voltage transmission line will cause any significant human or environmental impact. If any objections are filed with the Board, the Board shall either deny the application or conduct such a public hearing. Whether or not an objection is filed or a hearing is held, the Board shall determine whether the proposed high voltage transmission line will cause any significant human or environmental impact. If the Board determines that significant human or environmental impact will occur, it shall deny the application. If not, it may exempt the proposed transmission line with any appropriate conditions, but the utility shall comply with any applicable state rule and any applicable zoning, building and land use rules, regulations and ordinances of any regional, county, local and special purpose government in which the route is proposed to be located.

MEQB 79 Improvement of acquired routes and sites.

A. Delay in construction. Utilities that have acquired a route or site may proceed to construct or improve the

KEY: Existing rules are printed in standard type face. Proposed additions to existing rules are printed in **boldface**, while proposed deletions from existing rules are printed within [single brackets]. Additions to proposed rules are **underlined and boldfaced**, while deletions from proposed rules are printed within [[double brackets]].

route or site in accordance with these rules. However, when construction and improvement has not commenced four years after the construction, permit or site certificate has been issued by the Board, the Board shall suspend the certificate or permit. If at that time, or at a time subsequent, the utility decides to construct the proposed large electric power facility, it shall certify to the Board that there has been no significant changes in any material aspects of the conditions or circumstances existing when the permit or certificate was issued. If the Board determines that there are no significant changes, it shall reinstate the permit or certificate. If the Board determines that there is a significant change, it may order a new hearing and consider the matter further, or it may require a new application.

B. Minor alterations in a construction permit for a high voltage transmission line.

1. Application. Following issuance of a construction permit for a high voltage transmission line, a utility may apply to the Board for minor alterations on conditions specified in the permit. The utility shall submit an application for a minor alteration which contains sufficient information for the Board to determine within 45 days the following:

a. Whether or not the required changes are significant enough to warrant Board study and approval;

b. Whether or not to order public hearings near the affected area;

c. Whether or not additional fees shall be assessed.

2. Board action. If the Board decides to study the application, the Board shall determine within 70 days whether granting the application would be consistent with MEQB 73H. and shall grant or deny the utility's application.

MEQB 80 Revocation or suspension.

A. Initiation of board action. The Board may initiate action to consider revocation or suspension of a construction permit or certificate of site compatibility if the Board determines that a prima facie showing has been made by affidavit and documentation that a violation of the provisions of the Act has occurred as set forth in Minn. Stat. § 116C.645 and these rules. For purposes of this rule such a violation shall result from any act described in Minn. Stat. § 116C.645 unless the Board determines that significant additional adverse environmental effects will not result or that such significant additional adverse environmental effects can and will be corrected. Additional adverse environmental effects mean environmental effects which are more substantial, taken as a whole, than those which would have occurred in absence of a violation.

B. Board action. If the Board initiates action to consider revocation or suspension of a construction permit or certificate of site compatibility, it shall conduct a hearing pursuant to the contested case procedures of Minn. State. ch. 15. If the Board finds that the violation has or will cause significant additional or continuing adverse environmental impacts which cannot be corrected or substantially mitigated and that revocation will not imperil the utility's electric power system reliability, then it may revoke the permit or certificate or order other appropriate measures. If the Board finds that the violation has or will cause significant additional permanent or continuing adverse environmental impacts, and that corrective or mitigative measures are reasonably available then the Board shall order such measures and may suspend the permit or certificate until such measures are taken. If the Board finds that the violation has or will cause significant additional permanent or continuing adverse environmental impacts and that revocation will imperil the utility's electric power system reliability and that there are no mitigative or corrective measures which can be taken to improve the situation, then the Board may ask the Attorney General to bring action against the utility pursuant to Minn. Stat. § 116C.68.

MEQB 82 Assessment, application fees.

B. Application fees. Every applicant for a route or site pursuant to Minn. Stat. § 116C.57 shall pay to the Board a fee as prescribed by the Act.

1. For applications filed pursuant to Minn. Stat. § 116C.57, subds. 1 and 2, twenty-five percent of the total estimated fee shall accompany the application and the balance is payable in three equal installments at the end of 90, 180 and 270 days from the date of the Board's acceptance of the application.

2. For applications field pursuant to Minn. Stat. § 116C.57, subd. 3, twenty-five percent of the total estimated fee shall accompany the application and the balance is payable at the end of 90 days from the date of the Board's acceptance of the application.

3. For applications filed pursuant to Minn. Stat. § 116C.57, subd. 5, ten percent of the total estimated fee shall accompany the application and the balance is payable as determined by the Board.

Department of Public Welfare

Adopted Temporary Rule Governing Welfare Per-Diem Rates for Nursing Home Providers

Proposed temporary Rule 49A governing the regulations for determining welfare per-diem rates for nursing home providers under the Title XIX Medical Assistance which was published in the *State Register* on August 8, 1977 (2SR 234-235), was approved by the Attorney General as an adopted temporary rule on September 1, 1977. This temporary rule shall be effective for 90 days and may be reissued or continued in effect for an additional 90 days without holding a public hearing. It may not be reissued thereafter without following the rule-making procedures of Minn. Stat. § 15.0412 subd. 4.

KEY: Existing rules are printed in standard type face. Proposed additions to existing rules are printed in **boldface**, while proposed deletions from existing rules are printed within [single brackets]. Additions to proposed rules are **underlined and boldfaced**, while deletions from proposed rules are printed within [[double brackets]].

PROPOSED RULES

Environmental Quality Board

Proposed Rules Governing Transmission Line Routes and Sites for Electric Generating Plants

Notice of Hearing

Notice is hereby given of hearings on the Rules of the Minnesota Environmental Quality Board for siting large electric power generating plants and routing high voltage transmission lines.

Subject of the hearings: These hearings will be held to consider rules proposed for siting electric power plants over 50 megawatts and routing transmission lines over 200 kilovolts. These rules will include criteria for selecting sites and routes, a description of the information to be furnished by utilities and guidelines for public participation. The rules will also include procedures for the revocation or suspension of a construction permit or certificate of site compatibility, the procedures and timeliness for proposing alternative routes and sites, and route exemption criteria and procedures.

Taking part in the hearing: Any person can make statements, ask questions or present information at the hearings. Copies of the proposed rules are available from the Environmental Quality Board, free of charge. They may also be reviewed at the Board office or at libraries listed at the end of this notice. The hearings will be conducted under the rules of the Office of Hearing Examiners. The Hearing Examiner's rules are available from the Documents Section of the Department of Administration or the Hearing Examiner's Office.

Environmental Quality Board staff will present testimony on the proposed rules when hearings open at 9:00 a.m. in St. Paul on October 19, and will summarize their testimony at the beginning of all other hearings on these rules. (See "Times and Places" for locations.)

Hearing examiner: The independent hearing examiner who will conduct these hearings is Myron Greenberg, Office of Hearing Examiners, 1745 University Avenue, St. Paul, Minnesota 55104, telephone 612/296-8109.

Times and places of hearings:

St. Paul	October 19	9:00 a.m. and 7:00 p.m.	William Mitchell College of Law Legal Education Center, Room 107 40 North Milton
Duluth	October 20	7:00 p.m.	"The Depot" Multi Media Room Lower Floor (St. Louis County Heritage and Arts Center)
Thief River Falls	October 24	7:00 p.m.	Northland Community College Room B37
Bemidji	October 25	7:00 p.m.	Smith Elementary School Auditorium
Brainerd	October 26	7:00 p.m.	Brainerd Community College Media Center
St. Cloud	October 27	7:00 p.m.	City Hall Annex, Council Chambers
Alexandria	October 31	7:00 p.m.	Vocational-Technical Institute, Cafeteria
Mankato	November 1	7:00 p.m.	Mankato State University Centennial Student Union Ballroom Highland Campus
Rochester	November 2	7:00 p.m.	Rochester Community College Plaza West Building, Room P223

Additional hearings may be scheduled by the hearing examiner.

After the hearing: After the last hearing, the hearing examiner will accept written comments for five working days. Copies of the transcript will be available for review at libraries listed below and the Board office. The hearing examiner's report will also be placed in the libraries as soon as it is available.

The Environmental Quality Board will make the final decision on the rules. This decision will be reviewed by the

Attorney General for form and legality. Final rules will be published in the *State Register* and be available from the Board or may be reviewed at the libraries.

Libraries where information may be reviewed: Public libraries in Crookston, Bemidji, Duluth, Fergus Falls, Pine River, Willmar, Montevideo, Cambridge, St. Cloud, Marshall, Mankato, Rochester, and Minneapolis (Environmental Conservation Library, 300 Nicollet Mall) and the Board office.

Other information: These hearings are authorized by the Power Plant Siting Act as amended in 1977, Minn. Stat. § 116C.66.

Minn. Stat. ch. 10A requires each lobbyist to register with the Ethical Practices Board within five days after he commences lobbying. Lobbying includes attempting to influence rule-making by communicating or urging others to communicate with public officials. A lobbyist is generally any individual who spends more than $250 per year for lobbying or any individual who is engaged for pay or authorized to spend money by another individual or association and who spends more than $250 per year or five hours per month at lobbying. The statute provides certain exceptions. Questions should be directed to the Ethical Practices Board, 41 State Office Building, Saint Paul, Minnesota 55155, phone: 612/296-5615

Peter Vanderpoel
Chairman

Rules as Proposed

The 1977 Minnesota Legislature has amended the Power Plant Siting Act of 1973 and authorized the Minnesota Environmental Quality Board to promulgate rules to carry out the provisions of Minn. Stat. ch. 116C.51 et seq. (1977) pursuant to ch. 15.

On August 29, 1977 the Board approved for hearing the proposed rules MEQB 71-82 which follow and ordered public hearings on these rules.

MEQB 71 Authority, purpose and policy.

A. Authority. The rules contained herein are prescribed by the Minnesota Environmental Quality Board pursuant to the authority granted to the Board in the Power Plant Siting Act, Minn. Stat. § 116C.51 et seq. (1977), to give effect to the purposes of the Act.

B. Purpose and policy. It is the purpose of the Act and the policy of the State to locate large electric power facilities in an orderly manner compatible with environmental preservation and the efficient use of resources. In accordance with this policy, the Board shall choose locations that minimize adverse human and environmental impact while ensuring continuing electric power system reliability and integrity and ensuring that electric energy needs are met and fulfilled in an orderly and timely fashion. The Board shall provide for broad spectrum citizen participation as a principle of operation.

MEQB 72 Definitions. As used in these rules, the following terms have the meanings given them.

A. "Act" means the Power Plant Siting Act of 1973, as amended, Minn. Stat. § 116C.51 et seq. (1977).

B. "Board" means the Minnesota Environmental Quality Board.

C. "Construction" means any clearing of land, excavation, or other action that would adversely affect the natural environment of a site or route but does not include changes needed for temporary use of sites or routes for non-utility purposes, or uses in securing survey or geological data, including necessary boring, to ascertain foundation conditions.

D. "File" means to deliver 40 copies to the office of the chairman of the Board.

E. "High Voltage Transmission Line" (HVTL) means a conductor of electric energy and associated facilities designed for and capable of operation at a nominal voltage of 200 kilovolts or more. Associated facilities shall include, but not be limited to, insulators, towers, switching yards, substations and terminals.

F. "Large Electric Power Facilities" means high voltage transmission lines and large electric power generating plants.

F. "Large Electric Power Generating Plant" (LEPGP) means electric power generating equipment and associated facilities designed for or capable of operation at a capacity of 50,000 kilowatts or more.

H. "Large Electric Power Generating Plant Study Area" means a general area of land designated by the Board for purposes of planning for future sites.

I. "Person" means any individual, partnership, joint venture, private or public corporation, association,

KEY: Existing rules are printed in standard type face. Proposed additions to existing rules are printed in **boldface**, while proposed deletions from existing rules are printed within [single brackets]. Additions to proposed rules are **underlined and boldfaced**, while deletions from proposed rules are printed within [[double brackets]].

firm, public service company, cooperative, political subdivision, municipal corporation, government agency, public utility district, or any other entity, public or private, however organized.

J. "Public Advisor" means a staff person designated by the Board for the sole purpose of assisting and advising affected and interested citizens on how to effectively participate in the site and route designation processes.

K. "Right-Of-Way" means the land interest used or proposed to be used within a route to accommodate a high voltage transmission line.

L. "Route" means the location of a high voltage transmission line between two end points. A route may have a variable width of up to 1.25 miles.

M. "Route Segment" means a portion of a route.

N. "Site" means the location of a large electric power generating plant.

O. "Utility" means an entity engaged in this State in the generation, transmission or distribution of electric energy including, but not limited to, a private investor owned utility, a cooperatively owned utility, a public or municipally owned utility, or a private corporation.

MEQB 73 Procedure for designation of a route and issuance of a construction permit.

A. Content of an application for a construction permit. An application shall be filed with the Board which includes an environmental report consistent in form with a draft environmental impact statement (Minnesota Rule MEQB 30D). The application shall contain any information necessary to make the evaluation required in MEQB 73H. and the following:

1. The size and type of the proposed transmission line;

2. At least two proposed routes for the proposed transmission line;

3. An environmental analysis of each proposed route including a description of the environmental setting and the potential environmental impacts of each route;

4. The engineering and operational design concepts for the proposed transmission line;

5. A description of the construction, right-of-way preparation and maintenance procedures anticipated for the proposed transmission line;

6. The procedures and practices proposed for the ultimate abandonment and restoration of the right-of-way;

7. A listing of federal or state permits that may be required for the proposed transmission line;

8. A cost analysis of each route;

9. The certificate of need application submitted to the director of the Minnesota Energy Agency, if required by Minn. Stat. ch. 116H.

10. A statement of ownership of the utility as of the day of filing and an affidavit authorizing the applicant to act on behalf of the owners.

B. Acceptance of a construction permit application. The Board shall either accept or reject an application for a construction permit no later than 50 days after the application was filed with the Board. If the Board rejects the application, it shall at that time inform the applicant which deficiencies, if corrected, will allow the application to be accepted. On acceptance of the application, the Board shall initiate the study, public participation and hearings required by these rules. After acceptance of the application, the applicant shall provide any additional information which the Board deems necessary to process the application.

C. Route evaluation committee. Upon acceptance of an application for a construction permit, the Board may appoint a route evaluation committee consistent with the Act.

D. Public advisor. The public advisor shall be available to affected and interested citizens to advise them on how to participate in the route designation process. However, all persons given advice or aid in connection with participation in large electric power facility siting proceedings are hereby informed that the public advisor is not authorized to give legal advice or advice which may affect the legal rights of the person being advised. In no case shall any person rely to his possible legal disadvantage on such advice or information.

E. Information meetings. The Board shall hold at least one information meeting in each county through which a route is proposed to be located to explain the route designation process, present major issues and alternatives under consideration by the Board and respond to questions raised by the public.

F. Route proposals. The Board shall consider the route and route segments proposed by the applicant and may consider any other route or route segment it deems necessary. No route shall be considered at the public

hearing unless approved for consideration by the Board prior to notice of the hearing thereon. All approved routes shall be identified by the Board consistent with MEQB 76D. Any proposer of a route or route segment which the Board has approved for consideration shall make an affirmative presentation of facts on the merits of the proposal at the public hearing which shall provide the Board with a basis for making a determination on that proposal.

1. The Board member agencies, power plant siting staff and the route evaluation committee may propose routes or route segments to the Board. Route proposals made by the route evaluation committee must be made no later than 105 days after acceptance of the application by the Board.

2. Any other person may propose a route or a route segment in the following manner:

a. The route or route segment must be set out specifically on the appropriate general county highway map available from the Minnesota Department of Transportation, or on the appropriate United States Geological Survey Topographical maps.

b. The proposal must contain the data and analysis required in MEQB 73A. and MEQB 73H., except MEQB 73A.2; except where such information is the same as provided by the applicant.

c. The proposal must be presented to the chairman of the Board or his designee within 60 days of acceptance of the application by the Board.

Within 10 days of receipt of the proposal, the chairman of the Board or his designee shall determine if the proposal is adequately prepared. If the chairman of the Board or his designee determines that it is adequately prepared, he shall forward the proposal to the Board for its consideration. If the chairman of the Board or his designee determines that the proposal is not adequately prepared, he shall inform the proposer of any inadequacies in the proposal. The proposer shall have 15 days therefrom to provide additional information to the chairman of the Board or his designee. The chairman of the Board or his designee shall determine within 10 days whether the amended proposal is adequately prepared. If the chairman of the Board or his designee then determines that the proposal is not adequately prepared, the proposer may appeal to the Board to determine the adequacy of the proposal.

G. Public hearings. Public hearings held by the Board pursuant to this rule shall be held for the purpose of collecting and verifying data, and establishing a complete and accurate record upon which to base a decision. The hearings shall be conducted by an independent hearing examiner from the State Hearing Examiner's Office. The conduct of these hearings shall be as prescribed by rule adopted by the Chief Hearing Examiner.

H. Criteria for the evaluation of routes. In selecting a route and issuing a construction permit, the Board shall seek to minimize adverse human and environmental impact, maximize the efficient use of resources, and ensure continuing electric power system reliability. No route shall be designated by the Board in violation of federal or state statute or law, rule or regulation. No route shall be designated by the Board through state or national wilderness areas.

1. Designated lands. Lands designated as state and national parks and scientific and natural areas by the Congress of the United States, the Minnesota Legislature or the Commissioner of the Department of Natural Resources pursuant to Legislative directive have been set aside for the benefit of the people and for future generations. No land within any of these designated areas shall be selected as a high voltage transmission line route by the Board unless:

a. a route in a designated area would not materially damage or impair the purpose for which the land was designated; and

b. unusual circumstances exist in all alternate routes which would be more severely detrimental to humans or the environment if any alternate were selected.

Economic considerations alone shall not justify approval of these designated lands. In the event that such an area is approved, effort shall be made to minimize the harm to it.

2. Considerations for the designation of a route and issuance of a construction permit. The Board shall make an evaluation of the following considerations prior to issuance of a construction permit. In its evaluation of route alternatives, the Board shall consider the characteristics of a given geographical area, identify the potential impacts, and apply methods to mitigate adverse impacts so that it may select a route with the least adverse impact.

a. Identification of geographical characteristics

KEY: Existing rules are printed in standard type face. Proposed additions to existing rules are printed in **boldface**, while proposed deletions from existing rules are printed within [single brackets]. Additions to proposed rules are **underlined and boldfaced**, while deletions from proposed rules are printed within [[double brackets]].

and potential impacts. The Board shall identify the geographical characteristics and potential impacts in the following categories:

(1) Existing and projected human settlement, including but not limited to development patterns;

(2) Economic operations, including but not limited to agricultural, forestry and mining operations;

(3) The natural environment and public land, including but not limited to natural areas, wildlife habitat, waters, recreational lands, and lands of historic or cultural significance;

(4) Reliability, cost and accessibility.

b. Methods of mitigating impacts. The Board shall utilize the following methods in seeking to find a route with the least adverse impact:

(1) Evaluation of existing land use or management plans, and established methods of resource management;

(2) Evaluation of routes along or sharing existing rights-of-way;

(3) Evaluation of routes along survey, natural division and field boundaries;

(4) Evaluation of structures capable of expansion in transmission capacity through multiple circuiting or design modifications to accommodate future high voltage transmission lines.

(5) Evaluation of alternate structure types and technologies.

I. Board action. Within one year after the Board's acceptance of a utility's application for a construction permit, the Board shall act on that application. When the Board designates a route, it shall issue a permit for the construction of a high voltage transmission line specifying the type, design, routing, right-of-way preparation and maintenance, facility construction and abandonment procedures it deems necessary with any other appropriate conditions. The Board's decision shall be made in accordance with MEQB 73H. The Board shall give the reasons for its decision in written findings of fact.

J. Construction plans. Following issuance of a construction permit, a utility shall provide the Board with a preliminary construction plan at least 60 days prior to construction which shall show that the right-of-way of the transmission line as proposed is within the route designated by the Board. The Board may suspend the 60-day time limitation if it can be shown that earlier construction will not preclude proper review of the plans. If the utility makes any changes in its preliminary construction plan, it shall notify the Board in writing of such changes.

MEQB 74 Procedure for designation of a site and issuance of a certificate of site compatibility.

A. Content of an application for a certificate of site compatibility. The application for a certificate of site compatibility filed with the Board shall contain any information necessary to make the evaluation required in MEQB 74H. and the following,

1. The size and type of the proposed plant;

2. At least two proposed sites for the proposed plant;

3. The engineering and operational design concepts for the plant at each of the proposed sites;

4. An engineering analysis of each of the proposed sites;

5. The procedures and practices proposed for the ultimate abandonment and restoration of the site;

6. An environmental analysis of each proposed site, including a description of the environmental setting and the potential environmental impacts of each site;

7. A cost analysis of the plant at each proposed site;

8. The certificate of need application submitted to the director of the Minnesota Energy Agency, if required by Minn. Stat. ch. 116H.

9. A statement of ownership of the utility as of the day of filing and an affidavit authorizing the applicant to act on behalf of the owners.

After Board adoption and publication of its inventory of large electric power generating plant study areas, the utility shall either apply for sites located within the inventory of study areas, or shall specify the reasons for any proposal located outside of the study areas and make an evaluation of the proposed site based upon the planning policies, criteria and standards specified in the inventory.

B. Acceptance of an application for a certificate of site compatibility. The Board shall either accept or reject an application for a certificate of site compatibility no later than 50 days after the application was filed with

the Board. If the Board rejects the application, it shall at that time inform the applicant which deficiencies if corrected will allow the application to be accepted. On acceptance of the application, the Board shall initiate the study, public participation and hearings required by these rules. After acceptance of the application, the applicant shall provide any additional information which the Board deems necessary to process the application.

C. Site evaluation committee. On acceptance of an application for a certificate of site compatibility, the Board shall appoint a site evaluation committee consistent with the Act.

D. Public advisor. The public advisor shall be available to affected and interested citizens to advise them on how to effectively participate in the site designation process. However, all persons given advice or aid in connection with participation in large electric power facility siting proceedings are hereby informed that the public advisor is not authorized to give legal advice which may affect the legal rights of the person being advised. In no case shall any person rely, to his possible legal disadvantage, on such advice or information.

E. Information meetings. The Board shall hold at least one information meeting in each county in which a site is proposed to be located to explain the site designation process, to present major issues and alternatives under consideration by the Board, and to respond to questions raised by the public.

F. Site proposals. The Board shall consider the sites proposed by the applicant and may consider any other site it deems necessary. No site shall be considered at the public hearing unless approved for consideration by the Board prior to notice of the hearing thereon. All approved sites shall be identified by the Board consistent with MEQB 76D. Any proposer of a site which has been approved for consideration at the public hearings by the Board shall make an affirmative presentation of facts on the merits of the proposal at the public hearing which shall provide the Board with a basis for making a determination on that proposal. Any person may propose a site in the following manner:

1. The site must be set out specifically on United States Geological Survey topographical maps.

2. The proposal must contain the data and analysis required in MEQB 74A. and MEQB 74H. with the exception of MEQB 74A.2 and MEQB 74A.7; except where such information is the same as provided by the applicant.

3. The proposal must be presented to the chairman of the Board or his designee within 60 days of acceptance of the application by the Board. Within 10 days of receipt of the proposal, the chairman of the Board or his designee shall determine if the proposal is adequately prepared. If the chairman of the Board or his designee determines that it is adequately prepared, he shall forward the proposal to the Board for its consideration at its next meeting. If the chairman of the Board or his designee determines that the proposal is not adequately prepared, he shall inform the proposer of any inadequacies in the proposal. The proposer shall have 15 days therefrom to provide additional information to the chairman of the Board or his designee. The chairman of the Board or his designee shall determine within 10 days whether the amended proposal is adequately prepared. If the chairman of the Board or his designee then determines that the proposal is not adequately prepared, the proposer may appeal to the Board at its next meeting to determine the adequacy of the proposal.

G. Public hearings. Public hearings held by the Board pursuant to this rule shall be held for the purpose of collecting and verifying data, and establishing a complete and accurate record upon which to base a decision. The hearings shall be conducted by an independent hearing examiner from the State Hearing Examiner's Office. The conduct of these hearings shall be as prescribed by rule adopted by the Chief Hearing Examiner.

H. Criteria for the evaluation of sites. The following criteria and standards shall be used to guide the site suitability evaluation and selection process. Not all site selection criteria are applicable to all plants to the same degree.

1. Exclusion criteria.

a. No large electric power generating plant shall be sited in violation of any federal or state statute or law, rule or regulation. No area shall be selected in which a large electric power generating plant is not licensable by all appropriate state and federal government agencies.

b. The following land areas shall not be certified as a site for a large electric power generating plant except for use for water intake structures or water pipelines: national parks; national historic sites and landmarks; national historic districts; national wildlife

KEY: Existing rules are printed in standard type face. Proposed additions to existing rules are printed in **boldface**, while proposed deletions from existing rules are printed within [single brackets]. Additions to proposed rules are **underlined and boldfaced**, while deletions from proposed rules are printed within [[double brackets]].

refuges; national monuments; national wild, scenic and recreational riverways; state wild, scenic and recreational rivers and their land use districts; state parks; nature conservancy preserves; state scientific and natural areas; and state and national wilderness areas.

c. No area shall be selected which does not have reasonable access to a proven water supply sufficient for plant operation. No use of ground water shall be permitted where mining of ground water resources will result. "Mining" as used herein shall mean the removal of ground water that results in material adverse effects on ground water in and adjacent to the area, as determined in each case.

d. No water shall be transferred between the four major drainage basins within the state: that is, the Missouri River drainage basin, the Mississippi River drainage basin, the Lake Superior drainage basin, and the Red-Rainy River drainage basin.

2. Large electric power generating plant avoidance areas.

a. In addition to exclusion areas, the following land use areas shall not be approved for large electric power generating plant sites when feasible and prudent alternatives with lesser adverse human and environmental effects exist. Economic considerations alone shall not justify approval of avoidance areas. Any approval of such areas shall include all possible planning to minimize harm to these areas. These avoidance areas are: state registered historic sites; state historic districts; state wildlife management areas (except in cases where the plant cooling water is to be used for wildlife management purposes); county parks; metropolitan parks; designated state and federal recreational trails; designated trout streams; and the rivers identified in Minn. Stat. § 85.32, subd. 1 (1971).

b. Avoidance areas also apply to new transportation access routes and storage facilities associated with the plant in addition to the plant itself. Water intake structures and water pipelines shall not necessarily be prohibited from LEPGP avoidance areas.

c. The use of ground water for high consumption purposes, such as cooling, shall be avoided if feasible and prudent surface water alternatives less harmful to the environment exist. Ground water use to supplement available surface water shall be permitted if the cumulative impact minimizes environmental harm.

3. Site selection criteria. The following criteria shall be applied in the selection of sites:

a. Preferred sites require the minimum population displacement.

b. Preferred sites minimize adverse impacts on local communities and institutions.

c. Preferred sites minimize adverse health effects on human population.

d. Preferred sites do not require the destruction or major alteration of land forms, vegetative types, or terrestrial or aquatic habitats which are rare, unique, or of unusual importance to the surrounding area.

e. Preferred sites minimize visual impingement on waterways, parks, or other existing public recreation areas.

f. Preferred sites minimize audible impingement on waterways, parks or other existing public recreation areas.

g. Preferred sites minimize the removal of valuable and productive land from other necessary uses.

h. Preferred sites minimize the removal of valuable and productive water from other necessary uses and minimize conflicts among water users.

i. Preferred sites minimize potential accident hazards and possible effects with respect to geology.

j. Preferred sites permit significant conservation of energy or utilization of by-products.

k. Preferred sites are located near large load centers.

l. Preferred sites maximize the use of already existing operating sites.

m. Preferred sites utilize existing transportation systems unless feasible alternative systems, including new or upgraded existing substandard systems, have less adverse impact.

n. Preferred sites allow for larger rather than smaller generating capacity.

o. Preferred sites minimize adverse impact of transmission lines.

I. Board action. Within one year after the Board's acceptance of a utility's application for a certificate of site compatibility, the Board shall act on that application. When the Board designates a site it shall issue a certificate of site compatibility with any appropriate conditions. The Board's decision shall be made in accordance with MEQB 74H. The Board shall give the reasons for its decision in written findings of fact. If the

Board refuses to designate a site, it shall indicate the reasons for the refusal and indicate the necessary changes in size or type of facility to allow site designation.

J. Certificate administration. Following issuance of a certificate of site compatibility, the Board may require the applicant to supply such plans and information as it deems necessary to determine whether the plant, as proposed, is in compliance with the conditions of the certificate of site compatibility.

MEQB 75 Advisory Committees.

A. Route and site evaluation committees. Route and site evaluation committees appointed by the Board are advisory and are to assist the Board in evaluating applications for routes and sites.

B. Power plant siting advisory committee. The Board shall appoint a Power Plant Siting Advisory Committee which shall work closely with the Board staff in reviewing, advising, and making recommendations to the Board concerning development, revision and enforcement of any rule, inventory, or program initiated under the Act or these Rules. The Board shall provide guidance to the committee in the form of a charge and through specific requests. The committee shall be composed of as many members as may be designated by the Board, and its membership shall be solicited on a statewide basis. The committee shall be appointed for a one-year term coincident with the fiscal year.

MEQB 76 Notice.

A. Applications. Within 20 days of acceptance of any application submitted to the Board pursuant to the Act, except an exemption application, the Board shall give notice of acceptance of the application by paid advertisement in a legal newspaper of general circulation in each county in which a route or site is proposed by the applicant to be located. The notice shall include the following information:

1. Identification of the application;

2. The date of the Board's acceptance of the application.

3. A brief description of the proposed facility;

4. A map showing the routes or sites proposed in that county;

5. The name of the public advisor and the place where he can be reached;

6. Locations where the application is available to the public;

7. Procedures for proposing alternate routes or sites.

B. Information meetings. Notice and agenda of public information meetings of the Board shall be given by the Board consistent with the Act. For purposes of giving notice, a route or site proposal shall be any route or site proposed by the applicant or a route or site that is an accepted proposal under MEQB 73F.2. or 74F., or by resolution of the Board pursuant to MEQB 73F. or 74F.

C. Public hearings. Notice and agenda of public hearings shall be given by the Board consistent with the Act. For purposes of giving notice, a route or site proposal shall be any route or site proposed by the applicant or a route or site that is an accepted proposal under MEQB 73F.2 or 74F., or by resolution of the Board pursuant to MEQB 73F. or 74F.

D. Route and site proposals. Prior to public hearings held on routes and sites which the Board has approved for consideration at the public hearings consistent with these rules, the Board shall identify the routes and sites with maps published in a newspaper of general circulation in each county in which a route or site is proposed to be located showing the routes or sites in that county.

MEQB 77 Emergency certification.

A. Application. Any utility whose electric power system requires the immediate construction of a large electric power generating plant or a high voltage transmission line may apply to the Board for an emergency certificate of site compatibility or an emergency construction permit. The application for an emergency construction permit shall contain the supporting information required in MEQB 73A. and MEQB 77B. The application for an emergency certificate of site compatibility shall contain the supporting information required in MEQB 74A. and MEQB 77B.

B. Determination of an emergency. The Board shall hold a public hearing within 90 days of acceptance of an application for emergency certification to consider the following to determine whether or not an emergency exists:

KEY: Existing rules are printed in standard type face. Proposed additions to existing rules are printed in **boldface**, while proposed deletions from existing rules are printed within [single brackets]. Additions to proposed rules are **underlined and boldfaced**, while deletions from proposed rules are printed within [[double brackets]].

1. Any evidence offered by the Minnesota Energy Agency;

2. Whether adherence to the procedures and time schedules specified in MEQB 73I. and MEQB 74I. would jeopardize the utility's electric power system or would jeopardize the utility's ability to meet the electric needs of its customers in an orderly and timely manner;

3. Whether there remains any feasible or prudent alternative to the utility which can serve its immediate need;

4. Whether the utility is prepared to, and will upon authorization, carry out the acquisition and construction program at the maximum rate of progress.

The Board shall also establish whether the situation could have been reasonably anticipated by the utility in time to utilize the normal application procedures. If the Board finds that the utility could have reasonably anticipated the situation, the utility may be subject to the provisions of Minn. Stat. § 116C.68 (1977).

C. Board action. If the Board determines that an emergency exists, then the route or site designation procedures prescribed in MEQB 73 and MEQB 74, with the exception of MEQB 73F. and MEQB 74F., shall be followed except that the Board shall designate a route and issue an emergency construction permit or designate a site and issue an emergency certificate of site compatibility within 195 days of the application.

MEQB 78 Exemption of certain routes.

A. Application. A utility may apply to the Board to exempt the construction of a high voltage transmission line from the Act. A utility shall submit an application for exemption of a specific transmission line containing the following information:

1. The engineering design concepts;

2. The proposed location of the facility;

3. The environmental setting and impact of the proposed action;

4. A description of the plans for right-of-way preparation and construction.

B. Notice of exemption application. Within 15 days of filing with the Board an appication for exemption of a certain route, the utility shall:

1. Publish a notice and description of the exemption application including, but not limited to, a map of the proposed route and the size and type of facility in a legal newspaper of general circulation in each county in which the route is proposed to be located;

2. Send a copy of the exemption application by certified mail to the chief executive of any regional development commission, county, incorporated municipality and organized town in which the route is proposed to be located, and

3. Send a notice and description of the exemption application to each owner over whose property the line may run, together with an understandable description of the procedures the owner must follow should he desire to object.

C. Objection to an exemption application. Any person who owns real property crossed by the proposed route, or any person owning property adjacent to the property crossed by the proposed route, or any affected political subdivision may file an objection with the Board within 60 days after the giving of notice under MEQB 78B. stating reasons why the Board should deny the application.

D. Board action. The Board may conduct a public hearing to determine if the proposed high voltage transmission line will cause any significant human or environmental impact. If any objections are filed with the Board, the Board shall either deny the application or conduct such a public hearing. Whether or not an objection is filed or a hearing is held, the Board shall determine whether the proposed high voltage transmission line will cause any significant human or environmental impact. If the Board determines that significant human or environmental impact will occur, it shall deny the application. If not, it may exempt the proposed transmission line with any appropriate conditions, but the utility shall comply with any applicable state rule and any applicable zoning, building and land use rules, regulations and ordinances of any regional, county, local and special purpose government in which the route is proposed to be located.

MEQB 79 Improvement of acquired routes and sites.

A. Delay in construction. Utilities that have acquired a route or site may proceed to construct or improve the route or site in accordance with these rules. However, when construction and improvement has not commenced four years after the construction, permit or site certificate has been issued by the Board, the Board shall suspend the certificate or permit. If at that time, or at a time subsequent, the utility decides to construct the proposed large electric power facility, it shall certify to the Board that there has been no significant changes in any material aspects of the conditions or circumstances exist-

ing when the permit or certificate was issued. If the Board determines that there are no significant changes, it shall reinstate the permit or certificate. If the Board determines that there is a significant change, it may order a new hearing and consider the matter further, or it may require a new application.

B. Minor alterations in a construction permit for a high voltage transmission line.

1. Application. Following issuance of a construction permit for a high voltage transmission line, a utility may apply to the Board for minor alterations on conditions specified in the permit. The utility shall submit an application for a minor alteration which contains sufficient information for the Board to determine within 45 days the following:

a. Whether or not the requested changes are significant enough to warranty Board study and approval;

b. Whether or not to order public hearings near the affected area;

c. Whether or not additional fees shall be assessed.

2. Board action. If the Board decides to study the application, the Board shall determine within 70 days whether granting the application would be consistent with MEQB 73H. and shall grant or deny the utility's application.

MEQB 80 Revocation or suspension.

A. Initiation of board action. The Board may initiate action to consider revocation or suspension of a construction permit or certificate of site compatibility if the Board determines that a prima facie showing has been made by affidavit and documentation that a violation of the provisions of the Act has occurred as set forth in Minn. Stat. § 116C.645 and these rules. For purposes of this rule such a violation shall result from any act described in Minn. Stat. § 166C.645 unless the Board determines that significant additional adverse environmental effects will not result or that such significant additional adverse environmental effects can and will be corrected. Additional adverse environmental effects mean environmental effects which are more substantial, taken as a whole, than those which would have occurred in absence of a violation.

B. Board action. If the Board initiates action to consider revocation or suspension of a construction permit or certificate of site compatibility, it shall conduct a hearing pursuant to the contested case procedures of Minn. Stat. ch. 15. If the Board finds that the violation has or will cause significant additional or continuing adverse environmental impacts which cannot be corrected or substantially mitigated and that revocation will not imperil the utility's electric power system reliability, then it may revoke the permit or certificate or order other appropriate measures. If the Board finds that the violation has or will cause significant additional permanent or continuing adverse environmental impacts, and that corrective or mitigative measures are reasonably available then the Board shall order such measures and may suspend the permit or certificate until such measures are taken. If the Board finds that the violation has or will cause significant additional permanent or continuing adverse environmental impacts and that revocation will imperil the utility's electric power system reliability and that there are no mitigative or corrective measures which can be taken to improve the situation, then the Board may ask the Attorney General to bring action against the utility pursuant to Minn. Stat. § 116C.68.

MEQB 81 Annual hearing. The Board shall hold an annual public hearing on a Saturday in November in St. Paul in order to afford interested persons an opportunity to be heard regarding its inventory of study areas, route and site designation processes, other aspects of the Board's activities and duties performed pursuant to the Act, or policies set forth in these rules.

MEQB 82 Assessment, application fees.

A. Assessment. For purposes of determining the annual assessment on a utility pursuant to the Act, each utility shall, on or before July 1 of each year, submit to the Board a report of its retail kilowatt-hour sales in the State and its gross revenue from kilowatt-hour sales in the State for the preceding calendar or utility reporting year. Upon receipt of these reports, the Board shall bill each utility as specified in the Act.

B. Application fees. Every applicant for a route or site pursuant to Minn. Stat. § 116C.57 shall pay to the Board a fee as prescribed by the Act.

1. For applications filed pursuant to Minn. Stat. § 116C.57, subds. 1 and 2, twenty-five percent of the total estimated fee shall accompany the application and the

KEY: Existing rules are printed in standard type face. Proposed additions to existing rules are printed in **boldface**, while proposed deletions from existing rules are printed within [single brackets]. Additions to proposed rules are **underlined and boldfaced**, while deletions from proposed rules are printed within [[double brackets]].

balance is payable in three equal installments at the end of 90, 180 and 270 days from the date of the Board's acceptance of the application.

2. For applications filed pursuant to Minn. Stat. § 116C.57, subd. 3, twenty-five percent of the total estimated fee shall accompany the application and the balance is payable at the end of 90 days from the date of the Board's acceptance of the application.

3. For applications filed pursuant to Minn. Stat. § 116C.57, subd. 5, ten percent of the total estimated fee shall accompany the application and the balance is payable as determined by the Board.

Metropolitan Waste Control Commission

Proposed Rules Establishing an Industrial Cost Recovery System

Notice of Hearing

Notice is hereby given that a public hearing in the above-entitled matter will be held in the Metropolitan Council Chambers, 300 Metro Square Building, St. Paul, Minnesota, on Tuesday, October 25, 1977, commencing at 9:00 A.M. and continuing until all persons have had an opportunity to be heard.

All interested or affected persons will have an opportunity to participate concerning the adoption of the proposed rules. Statements may be made orally and written material may be submitted, whether or not an appearance is made at the hearings, by mail to Steve Mihalchick, Office of Hearing Examiners, Room 300, 1745 University Avenue, St. Paul, Minnesota 55104, telephone (612) 296-8112, either before the hearing or within five (5) working days, or for a period not to exceed twenty (20) calendar days if ordered by the Hearing Examiner, after the close of the hearing.

The proposed rules establish an Industrial Cost Recovery (ICR) System to be implemented by the Commission. In order to be eligible for federal construction grants, the Commission must meet all federal grant requirements of Public Law 92-500; adoption of an ICR System is one of these requirements. ICR will result in a new charge to industrial users of the Metropolitan Disposal System, with that charge intended to pay back that portion of federal construction grants received by the Commission attributable to providing treatment capacity for the wastes from industrial users. Copies of the proposed rules are now available and one free copy may be obtained by writing to the Metropolitan Waste Control Commission, 350 Metro Square Building, St. Paul, Minnesota 55101. Additional copies will be available at the door on the date of the hearing.

Statutory authority to adopt the proposed rules is contained in Minn. Stat. § 473.504, subds. 4 and 5.

Notice is hereby given that twenty-five (25) days prior to the hearing, a "statement of need" explaining why the Commission feels the proposed rules are necessary and a "statement of evidence" outlining the testimony to be introduced will be available for public inspection and review at the Office of Hearing Examiners.

In addition, please be advised that Minn. Stat. ch. 10A requires each lobbyist to register with the State Ethical Practices Board within five (5) days after he commences lobbying. Lobbying includes attempting to influence rulemaking by communicating or urging others to communicate with public officials. A lobbyist is generally any individual who spends more than $250 per year for lobbying or any individual who is engaged for pay or authorized to spend money by another individual or association and who spends more than $250 a year or five (5) hours per month for lobbying. The statute provides certain exceptions. Questions should be directed to the Ethical Practices Board, 41 State Office Building, Saint Paul, Minnesota 55155, telephone: (612) 296-5615.

Joseph D. Strauss,
Chairman
and
Richard J. Dougherty,
Chief Administrator

Rules as Proposed

MWCC 2 Rules for industrial cost recovery system.

A. Scope. To establish a procedure for industrial cost recovery in compliance with the Federal Water Pollution Control Act Amendments of 1972 (Public Law 92-500); a procedure for collecting from industrial users of the Metropolitan Disposal System the industrial users' share of certain federal grant contributions for the construction of facilities inclusive of and appurtenant to the Metropolitan Disposal System; a procedure for paying to the United States Government a portion of the monies so collected; and providing an effective implementation date.

B. Definitions. As used in these rules, the following words shall have the meanings defined herein:

1. "BOD" (biochemical oxygen demand) means a measure of the oxygen equivalent of that portion of organic matter that is susceptible to oxidation by biochemical means under standard laboratory procedures.

2. "COD" (chemical oxygen demand) means a measure of the oxygen equivalent of that portion of organic matter that is susceptible to oxidation by a strong chemical oxidant under standard laboratory procedures.

3. "Commission" or "MWCC" means the Metropolitan Waste Control Commission established by Minn. Sta. § 473C.03 as amended.

4. "Industrial Cost Recovery" (ICR) means recovery by the Commission from the industrial users of the Metropolitan Disposal System of the federal grant amounts allocable to the treatment of wastes from such industrial users of the Metropolitan Disposal System.

5. "Industrial Cost Recovery Period" means a period equal to 30 years or the useful life of the treatment works, whichever is less, during which the grant amount allocable to the treatment of wastes from industrial users is recovered from the industrial users of such treatment works.

6. "Industrial User" means any nongovernmental user of publicly owned treatment works identified in the Standard Industrial Classification (SIC) Manual, 1972, United States Office of Management and Budget, as amended and supplemented, including but not limited to the following divisions:

a. Division A. Agriculture, Forestry, and Fishing.

b. Division B. Mining.

c. Division D. Manufacturing.

d. Division E. Transportation, Communications, Electric, Gas, and Sanitary Services.

e. Division I. Services.

7. "Metropolitan Disposal System" (MDS) means any and all of the interceptors and treatment works owned or operated by the Commission.

8. "SS" (suspended solids) means solids that either float on the surface of, or are in suspension in, water, wastewater, or other liquids and which are removable by standard laboratory procedures.

C. Determination of industrial cost recovery (ICR) period.

1. For each project funded under PL 92-500, the ICR period shall begin upon completion of construction and the date of beneficial use; the initial ICR period for the Commission's ICR System shall commence on January 1, 1978.

2. ICR shall continue for a period of 30 years or the useful life of the treatment works, whichever is less, with respect to each project. Payments for each project shall be made in 30 consecutive years or in the useful life consecutive years commencing with the year of the first payment.

3. The responsibility of new industrial users for ICR shall begin upon the date use is initiated.

4. ICR shall terminate with respect to a particular industrial user when the user ceases to use the Metropolitan Disposal System.

D. Industrial cost recovery (ICR) formula.

1. The ICR responsibility of each industrial user or user class shall be based on the federal grant award percentages as computed for the related waste characteristics, the MDS loadings, and the loadings received from an industrial user, all of which affect the cost of construction.

2. Waste characteristics are strength (BOD or COD and suspended solids) and volume of flow.

3. The formulae for determining the annual ICR payment are as follows:

$$V_e = V_i + V_i \left[\left(\frac{COD_i - COD_d}{COD_d} \right) \frac{G_{cod}}{G_a} + \left(\frac{SS_i - SS_d}{SS_d} \right) \frac{G_{ss}}{G_a} \right]$$

and,

$$\frac{V_e}{V_t} \times \frac{G_t}{U} = \text{ICR Annual Payment}$$

where:

V_e = Equivalent volume loading capacity of user's discharge on disposal system in million gallons per day (MGD).

KEY: Existing rules are printed in standard type face. Proposed additions to existing rules are printed in **boldface**, while proposed deletions from existing rules are printed within [single brackets]. Additions to proposed rules are **underlined and boldfaced**, while deletions from proposed rules are printed within [[double brackets]].

V_i = Volume of industrial user's discharge in million gallons per day (MGD).

COD_i = Chemical Oxygen Demand Concentration, in mg/l, of industrial user's discharge ($COD_i \geq COD_d$).

COD_d = Chemical Oxygen Demand Concentration, in mg/l, of MDS design loadings.

SS_i = Suspended Solids Concentration, in mg/l, of industrial user's discharge ($SS_i \geq SS_d$).

SS_d = Suspended Solids Concentration, in mg/l, of MDS design loadings.

G_a = Grant awards, in dollars, adjusted for stormwater collection and treatment.

G_{cod} = COD related share of adjusted Federal grant awards, in dollars.

G_{ss} = SS related share of adjusted Federal grant in dollars.

V_t = Current year hydraulic loading of MDS, in million gallons per day (MGD).

G_t = ICR eligible grant pool, in dollars. (Federal grant awards in dollars, adjusted for stormwater treatment and unused MDS capacity).

U = Industrial cost recovery period, in years, as useful life of facility.

a. When an industrial user's supporting analytical data demonstrates to the satisfaction of the Commission that a gross inequity would result if and when COD values are used in the ICR formula, the Commission will allow the use of BOD values in place of COD.

b. The projects for which ICR is required are those projects for which Environmental Protection Agency grants are awarded after March 1, 1973. As new construction financed by federal grants is completed, the ICR payment figure shall be adjusted to take into consideration the federal contribution to the eligible grant pool for the succeeding year.

E. User classification.

1. The Commission shall use an industrial user classification in accordance with the Standard Industrial Classification (SIC) Manual, 1972, of the United States Office of Management and Budget, as amended and supplemented, inclusive of those industrial user Divisions listed under B6.

2. ICR is the responsibility of each industrial user.

3. Industrial users subject to the ICR system shall receive an offsetting credit for a waste strength and flow based on their number of employees.

F. Monitoring, reporting and agreements.

1. Routine metering, sampling, analyzing and reporting of waste discharges shall be conducted by each industrial user in accordance with appropriate scheduling by the Commission.

2. The industrial user shall:

a. operate and maintain recording and totalizing equipment for flow metering, except where the entire water supply is adequately metered and adjustments to water supply figures are demonstrated to the satisfaction of the Commission to be accurate;

b. obtain representative samples of waste discharges on normal (not minimum) operating days;

c. have representative samples analyzed according to the latest edition of "Standard Methods for the Examination of Water and Wastewater"; and

d. submit to the Commission a written copy of all volume and analytical results obtained from *any* sampling made during the reporting period.

3. The industrial user and the Commission may agree in writing to reasonable waste characteristics, in lieu of the sampling and analyzing requirements of this section, to be used to calculate ICR charges under the ICR formula.

4. In the event that an industrial user does not comply with the Commission's reporting requirements, the Commission shall determine appropriate ICR charges to that user based upon available information on waste characteristics.

G. Billing and accounting.

1. ICR charges shall be billed to and payments received from industrial users at least annually. ICR charges shall be processed and billed in accordance with Minn. Stat. § 473.504, subd. 5, as implemented by the MWCC and the local governmental unit in which the industrial user is located.

2. ICR billings will vary from year to year as the

usage of the Metropolitan Disposal System increases or decreases and as new projects are added to the ICR grant pool.

3. The accounting period for the ICR system shall be the same as the Commission's fiscal year, January 1 through December 31, or as may be amended.

4. The Commission shall maintain a complete set of records pertaining to ICR as required by applicable federal rules and regulations.

H. ICR funds.

1. All ICR funds collected, other than the Commission's discretionary share of ten percent as specified by federal regulations, shall be deposited in interest-bearing accounts fully collateralized by:

a. obligations of the United States Government, or

b. obligations guaranteed as to principal and interest by the United States Government or any agency thereof.

2. Once each year, and within four months after the close of the fiscal year, the Commission shall return to the United States Treasury the required percentage of the ICR funds, plus interest earned thereon.

3. The Commission's discretionary share of ten percent of the ICR funds may be used inclusive of but not limited to the following priority listing:

a. ICR system administration, billing, and quality control monitoring.

b. Research and development projects relative to the treatment of wastewater loads and characteristics from the industrial users of the Metropolitan Disposal System.

c. Operation and maintenance of the Metropolitan Disposal System.

4. The remaining portion of the ICR funds and the accrued interest thereon shall be held by the Commission for use in payment of expansion and reconstruction projects pursuant to the Code of Federal Regulations at 40 CFR 35.928-2(b).

I. Appeal procedure.

1. An industrial user, or anyone else affected by ICR as established by these Rules, may seek review of the ICR program by appealing in writing to the MWCC Chief Administrator. If with respect to an ICR billing the letter seeking review must be received within thirty days of the billing date.

2. A decision of the Chief Administrator may be appealed for hearing to the Commission by giving written notice of appeal within ten days after the Chief Administrator's decision has been received in writing. Notice of such hearing shall be mailed to the appealing industrial user.

3. The decision of the Commission on such appeal shall be the final determination of the MWCC.

J. Severability. If any provision of these Rules or the application of any provision to any person or circumstance is held invalid, the invalidity shall not affect other provisions or applications of these Rules and to this end the provisions of these Rules are declared to be severable.

K. Effective date. The ICR system shall take effect on January 1, 1978.

Pollution Control Agency

Identification, Labeling, Classification, Storage, Collection, Transportation and Disposal of Hazardous Waste

Notice of Hearing

Notice is hereby given that a public hearing on the above-captioned rules and amendments will be held in the following places on the indicated dates commencing at 9:30 a.m. and continuing until all persons have had an opportunity to be heard:

1. Monday, October 24, 1977: Agency Boardroom, 1935 W. County Road B2, Roseville, Minnesota

2. Tuesday, October 25, 1977: Room 83, State Office Building, St. Paul, Minnesota

KEY: Existing rules are printed in standard type face. Proposed additions to existing rules are printed in **boldface**, while proposed deletions from existing rules are printed within [single brackets]. Additions to proposed rules are **underlined and boldfaced**, while deletions from proposed rules are printed within [[double brackets]].

3. Wednesday, October 26, 1977: Agency Boardroom, 1935 W. County Road B2, Roseville, Minnesota

4. Monday, October 31, 1977: Central Lecture Hall, Duluth Area Vocational Technical Institute, Duluth, Minnesota

5. Wednesday, November 2, 1977: Science and Health Building, Lecture Hall S-209, Fergus Falls Community College, Fergus Falls, Minnesota

6. Friday, November 4, 1977: Auditorium, Rochester Public Library, Rochester, Minnesota

All interested or affected persons will have an opportunity to participate. Statements may be made orally and written materials may be submitted at the hearing. In addition, written materials may be submitted by mail to the hearing examiner assigned to this matter:

William Seltzer
Office of Hearing Examiners
Room 300
1745 University Avenue
St. Paul, Minnesota 55104
(612) 296-8105

either at the hearing or within 5 working days after the close of the hearing. The hearing will be conducted as described in Minn. Stat. § 15.0412 and in Minnesota Regulations HE 101-109.

The proposed rules, if adopted, would establish criteria for determining whether a waste is a hazardous waste. They would also require the producers of most wastes to evaluate the wastes to determine whether they are hazardous. All hazardous wastes would have to be handled and disposed of in accordance with pertinent provisions of the proposed regulations. The amendments to the solid waste regulations, if adopted, would clarify that hazardous wastes are regulated under these new hazardous waste regulations and not under the solid waste regulations.

Copies of the proposed rules and amendments are now available and one free copy may be obtained by writing to the Minnesota Pollution Control Agency, 1935 W. County Road B2, Roseville, Minnesota 55113 (Attention: Jim Kinsey). Additional copies will be available at the door on the date of the hearing. The agency's authority to promulgate the proposed rules is contained in Minn. Stat. § 115.03(3) (1976), § 116.07 (1976) and § 473.823 (1976). A ''statement of need'' explaining why the agency feels the proposed rules are necessary and a ''statement of evidence'' outlining the testimony they will be introducing will be filed with the Hearing Examiners Office at least 25 days prior to the hearing and will be available there for public inspection.

Please be advised that Minn. Stat. ch. 10A, requires each lobbyist to register with the Ethical Practices Board within five days after he commences lobbying. Lobbying includes attempting to influence rulemaking by communicating or urging others to communicate with public officials. A lobbyist is generally any individual who spends more than $250 per year for lobbying or any individual who is engaged for pay or authorized to spend money by another individual or association and who spends more than $250 per year or five hours per month at lobbying. The statute provides certain exceptions. Questions should be directed to the Ethical Practices Board, 41 State Office Building, St. Paul, Minnesota 55155, phone (612) 296-5615.

By Joseph F. Grinnell
Agency Board Chairman
and Sandra S. Gardebring
Executive Director

Rules as Proposed

HW 1 General applicability, definitions, abbreviations, incorporations, severability, and variances.

A. General applicability. The provisions of these regulations govern the identification, classification, storage, labeling, transportation, treatment, processing, and disposal of hazardous waste by any person and the issuance of permits for the construction, operation, and closure of a hazardous waste facility for the protection of the environment.

B. Definitions. As used in these hazardous waste regulations the following words shall have the meanings defined herein:

1. Agency: the Minnesota Pollution Control Agency.

2. Chemical composition: any of the following:

a. A standard chemical nomenclature such as those adopted by the International Union of Pure and Applied Chemistry or the Chemical Abstracts' Service.

b. Common chemical name when it is documented to the Director that the number of isomers, related compounds of similar chemical structure and property, etc., make chemical analysis or delineation impractical.

c. Common chemical name of a mixture of components with similar properties, but not including a trade name.

3. Components of the waste: chemical elements, chemical compounds, and ions that constitute the waste and those that may form during the management of the waste from chemical reactions among the components or as biological products of microbial action.

4. Container: any packaging or containment unit, excluding portable tanks and storage tanks.

5. Corrosive material: a material that has any one of the following properties:

a. a pH that is greater than 12 or less than 3 for a liquid, semisolid, sludge, or saturated aqueous solution of a solid or gas;

b. the ability to cause a visible destruction or irreversible alteration of skin tissues at the site of contact following an exposure period of four hours or less when tested by the technique described in 16 C.F.R. § 1500.41 (1977);

c. a corrosion rate of 0.250 inch per year or more on Society of Automotive Engineers' 1020 Steel when tested in accordance with the minimum requirements described in the National Association of Engineers' Standard TM-01-69, at a test temperature of 130°F (54.4°C).

6. Director: the Executive Director of the Minnesota Pollution Control Agency.

7. Explosive material: a material that has the property either to evolve large volumes of gas that are dissipated in a shock wave or to heat the surrounding air so as to cause a high pressure gas that is dissipated in a shock wave. Explosive materials include, but are not limited to, explosives as defined in 49 C.F.R. § 173.50 (1976) and compressed gases as defined in 49 C.F.R. § 173.300 (1976).

8. Facility operator: any person who owns, leases, operates, controls, supervises, closes, or abandons a hazardous waste facility.

9. Flammable material: any material that:

a. has a flash point below 200°F (93.3°C), except the following:

(1) a material comprised of miscible components having one or more components with a flash point of 200°F (93.3°C), or higher, that make up at least 99% of the total volume of the mixture;

(2) a material that has a flash point greater than 100°F (37.8°C) and that when heated to 200°F (93.3°C) will not support combustion beyond the flash;

(3) an explosive material; or

b. may ignite without application of a flame or spark including, but not limited to, nitro cellulose, certain metal hydrides, alkali metals, some oily fabrics, processed meals, and acidic anhydrides.

10. Flash point: the minimum temperature at which a material gives off vapor within a test vessel in sufficient concentration to form an ignitable mixture with air near the surface of the material.

11. Floodplain: as defined in Minn. Stat. § 104.02, subd. 3.

12. Generator: a person who produces a hazardous waste within the State of Minnesota or a person who produces a hazardous waste outside the State of Minnesota that is transported to a location within the State of Minnesota.

13. Groundwater: the water contained below the surface of the earth in the saturated zone including, without limitation, all waters whether under confined, unconfined or perched conditions, in near surface unconsolidated sediment or regolith, or in rock formations deeper underground. The term ground water shall be synonymous with underground water.

14. Hazardous property: any property of a waste that requires the waste to be classified as a hazardous waste.

15. Hazardous waste: as defined in Minn. Stat. § 116.06, subd. 13.

16. Hazardous waste facility: real or personal property that is used or is constructed to be used for the management of hazardous waste including, but not limited to the following:

a. Hazardous waste containerized storage facility: a hazardous waste facility that is designed or oper-

KEY: Existing rules are printed in standard type face. Proposed additions to existing rules are printed in **boldface**, while proposed deletions from existing rules are printed within [single brackets]. Additions to proposed rules are **underlined and boldfaced**, while deletions from proposed rules are printed within [[double brackets]].

ated for the on-site storage of hazardous waste that is in containers, portable tanks, or storage tanks.

b. Hazardous waste noncontainerized storage facility: a hazardous waste facility that is designed or operated for the storage of hazardous waste in lagoons, basins, ponds, vaults, or similar bulk storage other than containers or tanks.

c. Hazardous waste transfer station: a hazardous waste facility that receives wastes from one or more generators and is designed or operated for the purpose of intermediate storage of wastes prior to transportation of the waste to another hazardous waste facility.

d. Hazardous waste processing facility: a hazardous waste facility that is designed and operated to modify the chemical composition or chemical, physical, or biological properties of a hazardous waste by means such as incineration, reclamation, distillation, precipitation, or other similar processes.

e. Hazardous waste land disposal facility: a hazardous waste facility that is designed or operated for the purpose of disposing of, or storing for a period greater than one year, hazardous waste in the subsurface of the land.

f. Hazardous waste land treatment facility: a hazardous waste facility that is designed or operated for the purpose of utilizing the surface of the land as the medium by which biological, physical, or chemical processes can provide treatment of hazardous waste.

17. Hazardous waste management: the total system for the identification, storage, collection and removal of hazardous waste from public or private property, the transportation of the waste to a hazardous waste facility, and the ultimate processing or disposal of the waste by approved methods in accordance with these regulations. Any reference to hazardous waste being managed shall refer to the foregoing.

18. Incompatible wastes: wastes that when in contact with each other pose a threat to human health and safety that does not exist when they are separate, including, but not limited to, wastes that pursuant to 49 C.F.R. § 177.848 (1976) cannot be stored or transported together.

19. Irritative material: a noncorrosive material which has the property to cause a local reversible injury to a biological membrane at the site of contact as determined by either of the following:

a. Practical experience with the waste where short term exposures have caused first degree burns and where long term exposures may cause second degree burns;

b. Skin irritation of an empirical score of five or more as determined pursuant to 16 C.F.R. § 1500.41 (1977).

20. Leachate: a liquid that is released from, or percolated through, a waste as a result of conditions that arise during storage, land disposal, or land treatment.

21. Median lethal concentration (LC_{50}): the calculated concentration at which a material kills 50% of a group of test animals within a specified time.

a. Aquatic LC_{50}: the LC_{50} determined by a test in which the specified time is 96 hours, the test animals are at least 10 fathead minnows, and the route of administration follows accepted static or flow through bioassay techniques.

b. Inhalation LC_{50}: the LC_{50} determined by a test in which the specified time is 14 days, the group of the test animals is at least ten white laboratory rats of 200 to 300 grams each, half of which are male and half of which are female, and the route of administration is continuous respiratory exposure for a period of one hour.

22. Median lethal dose (LD_{50}): the calculated dose at which a material kills 50% of a group of test animals within a specified time.

a. Oral LD_{50}: the LD_{50} determined by a test in which the specified time is 14 days, the group of test animals is at least ten white laboratory rats of 200 to 300 grams each, half of which are male and half of which are female, and the route of administration is a single oral dose.

b. Dermal LD_{50}: the LD_{50} determined by a test in which the specified time is 14 days, the group of test animals is ten or more white rabbits, half of which are male and half of which are female, and the route of administration is a 24 hour exposure with continuous contact on bare skin.

23. Oil: a petroleum derived material that does not have a defined chemical structure.

24. On-site management: the handling of a hazardous waste after generation without transporting such hazardous waste by public thoroughfare.

25. Open burning: the burning of any matter whereby the resultant combustion products are emitted

directly to the atmosphere without passing through an adequate stack, duct, or chimney.

26. Oxidative material: any material with the property to readily supply oxygen to a reaction in the absence of air. Oxidative materials include, but are not limited to, oxides, organic and inorganic peroxides, permanganates, perrhenates, chlorates, perchlorates, persulfates, nitric acid, organic and inorganic nitrates, iodates, periodates, bromates, perselenates, perbromates, chromates, dichromates, ozone, and perborates. Bromine, chlorine, fluorine, and iodine react similarly to oxygen under some conditions and are therefore also oxidative materials.

27. Pesticide: a material that is labeled, represented, or intended for use as an economic poison in accordance with the Federal Insecticide, Fungicide, and Rodenticide Act. (7 U.S.C.A. §§ 136-136y (1977).)

28. Person: as defined in Minn. Stat. § 116.06, subd. 8.

29. Resource recovery: as defined in Minn. Stat. § 473.121, subd. 31c.

30. Routine waste management: the total system for the handling of a waste by one of the following methods:

a. Storage, collection, and removal of waste from public or private property, its transportation to intermediate or final disposal facilities, and its ultimate disposal at a sanitary landfill permitted by the Agency.

b. Discharge into a sewer system and subsequent treatment at a wastewater treatment works operated pursuant to a National Pollutant Discharge Elimination System Permit or State Disposal Permit.

c. Discharge into the atmosphere as an air contaminant or emission emitted pursuant to an Emission Facility Operating Permit.

d. A wastewater discharge pursuant to a National Pollutant Discharge Elimination System Permit or a State Disposal System Permit.

31. Sanitary landfill: a land disposal site employing an engineered method of disposing of solid waste on land in a manner that minimizes environmental hazards by spreading the solid waste in thin layers, compacting the solid waste to the smallest practical volume, and applying cover material at the end of each operating day, or at intervals as may be required by the Agency.

32. Saturated zone: that part of the earth's crust in which all the voids, large and small, are ideally filled with water under pressure greater than atmospheric.

33. Sewage: as defined in Minnesota Statutes § 115.01 subd. 6.

34. Sewer system: as defined in Minnesota Statutes § 115.01 subd. 6.

35. Shoreland: as defined in Minnesota Statutes § 105.485 subd. 2.

36. Tank: any packaging or containment unit having a capacity of 100 gallons or greater that is used to confine and hold a material. Tanks that are anchored, fixed, or attached to one location are storage tanks, and those that are not are portable tanks.

37. Toxic material: a material with any one of the following properties:

a. An oral LD_{50} less than 500 milligrams of material per kilogram of body weight of test animal.

b. A dermal LD_{50} less than 1000 milligrams of material per kilogram of body weight of test animal.

c. An inhalation LC_{50} (when the material or a component is in a form that may be inhaled) less than:

(1) 2000 milligrams of material as dust or mist per cubic meter of air, or

(2) 1000 parts per million of material as gas or vapor.

d. An aquatic LC_{50} less than 100 milligrams of material per liter of water.

38. Waste: any discarded material including, but not limited to, solids, semisolids, sludges, liquids, gases, and their vapors, mists, or dusts.

39. Waters of the state: as defined in Minn. Stat. § 115.01, subd. 9.

40. Water table: the surface of the ground water at

KEY: Existing rules are printed in standard type face. Proposed additions to existing rules are printed in **boldface**, while proposed deletions from existing rules are printed within [single brackets]. Additions to proposed rules are **underlined and boldfaced**, while deletions from proposed rules are printed within [[double brackets]].

which the pressure is atmospheric. Generally this is the top of the saturated zone.

41. Wetland: a natural marsh where water stands near, at or above the soil surface during a significant portion of most years, and which is eligible for classification as an inland fresh water wetland type 3, 4 or 5 under U.S. Department of Interior classifications.

C. Abbreviations. The abbreviations used in these hazardous waste regulations have the following meanings:

1. A.S.T.M.: American Society for Testing and Materials.

2. C.F.R.: Code of Federal Regulations.

3. LC50: median lethal concentration.

4. LD50: median lethal dose.

5. NPDES: National Pollutant Discharge Elimination System.

D. Incorporations. The following are contained in the indicated appendices at the end of this regulation and are hereby incorporated and made a part of these regulations and shall apply as indicated within these regulations:

1. ASTM D3243-73 (Appendix A).

2. ASTM D56-70 (Appendix B).

3. ASTM D3278-73 (Appendix C).

4. ASTM D93-73 (Appendix D).

5. ASTM D2487-69 (Appendix E).

6. ASTM D2499-69 (Appendix F).

7. National Association of Corrosion Engineers' Standard TM-01-69 (Appendix G).

8. 10 C.F.R. § 20.301 (1977) (Appendix H).

9. 16 C.F.R. § 1500.41 (1977) (Appendix I).

10. 49 C.F.R. §§ 173.50, 173.300, 177.824 and 177.848 (1976) (Appendix J).

E. Severability. If any provision of these regulations or the application thereof to any person or circumstance is held to be invalid, such invalidity shall not affect other provisions of these regulations that can be given effect without the invalid provision or application. To this end, the provision of all regulations and the various applications thereof are declared to be severable.

F. Variances. The Agency may grant a variance pursuant to Minnesota Regulations MPCA 6 from any requirement in these hazardous waste regulations in order to avoid undue hardship and promote the effective and reasonable application and enforcement of these regulations. The Agency may prescribe such conditions and time limitations in a variance as it deems necessary for prevention, control, and abatement of pollution in harmony with local, state, and federal law.

G. Other standards. Nothing in these hazardous waste regulations shall relieve any person from any obligations or duties imposed by any other laws, statutes, regulations, standards, or ordinances of the federal, state or local governments or any agency thereof now in effect or which become effective in the future. In the event these hazardous waste regulations conflict with any such laws, statutes, regulations, standards, or ordinances, the more stringent shall apply.

HW 2 Classification, evaluation, and certification of waste.

A. Applicability. This regulation establishes the criteria for determining whether a waste is a hazardous waste.

B. Hazardous wastes. The following wastes are hazardous wastes:

1. A waste that contains a component specified in List 1 is a hazardous waste if the concentration of that component in any part of the waste at any time during or after its production exceeds 0.1% by weight.

List 1

2-Acetylaminofluorene (2-AAF)
4-Aminodiphenyl (4-ADP)
Arsenic and Compounds
Asbestos
Benzene
Benzidine
Beryllium and its Compounds
Cadmium and its Compounds
Carbon Tetrachloride
Chloroform
bis-(Chloromethyl) ether (BCME)
Chloremethyl methyl ether (CMME)
Chromium and its Compounds (VI)
3,3′-Dichlorobenzidine (DCB)
4-Dimethylaminoazobenzene (DAB)
Ethyleneimine (EI)

Lead and its Compounds
4,4-Methylene-bis-2-Chloroaniline (MOCA)
α-Naphthylamine (1-NA)
β-Naphthylamine (2-NA)
Nickel and its Compounds
4-Nitrobiphenyl (4-NBP)
n-Nitrosodimethylamine (DMN)
Polychlorinated biphenyl (PCB)
β-Propiolactone (BPL)
Vinyl Chloride (VCM)

2. A waste which contains a component specified in List 2 is a hazardous waste unless leachate from that waste does not contain that component at a concentration in excess of that specified in List 2.

List 2

Component	Limit (ppm)
Aldrin	0.1
Cadmium and its compounds	1.0
Chlordane	0.3
DDT	0.02
Endrin	0.02
Heptachlor	0.01
Lead and its compounds	3.0
Mercury and its compounds	0.2
Methoxychlor	0.05
Polychlorinated biphenyl (PCB)	0.02
Toxaphene	0.1
Mirex	0.01

3. Any of the following wastes:

a. An explosive material.

b. A flammable material.

c. An irritative material.

d. A corrosive material.

e. An oxidative material.

f. A toxic material.

4. A waste that is comprised of small amounts of unrelated substances such that the description of any sample or set of samples is not representative of the total waste. Such wastes shall include, but not be limited to, discarded chemicals from a chemistry laboratory, wastes from pilot plant chemical reactions, and discarded prescription drugs.

5. Any other waste that cannot be handled by routine waste management techniques because it presents a substantial present or potential hazard to human health or to other living organisms is a hazardous waste, including, but not limited to:

a. Waste oil.

b. Wastes that are capable of spontaneously producing temperatures in excess of 200°F (93.3°C).

C. Exempt wastes. The following wastes may be stored, labeled, transported, treated, processed, and disposed of without complying with the requirements of these regulations:

1. Normal household refuse, similar garbage or rubbish, and sewage.

2. Asbestos in taconite wastes.

3. Septic tank sludge from households.

4. An air contaminant or emission emitted pursuant to an Emission Facility Operating Permit.

5. A composite wastewater discharged to a municipal sewer system or discharged pursuant to an NPDES or a State Disposal System Permit. This exemption does not include any of the wastes that are discharged into a sewer system.

6. Municipal sewage sludge.

7. Radioactive waste that is produced pursuant to a permit issued under 10 C.F.R. Parts 30, 40 and 70 (1976) and that is disposed of in compliance with 10 C.F.R. § 20.301 (1976).

8. A waste pesticide that is not in List 1 or List 2 or an unrinsed pesticide container that contained a pesticide that is not in List 1 or List 2.

D. Evaluation of wastes.

1. Any person who produces any waste within the State of Minnesota or any person who produces a waste outside the State of Minnesota that is transported to a location within the State of Minnesota, and which waste is not an exempt waste under subsection C, shall evaluate the waste to determine if it is hazardous. The person evaluating the waste shall collect a representative

KEY: Existing rules are printed in standard type face. Proposed additions to existing rules are printed in **boldface**, while proposed deletions from existing rules are printed within [single brackets]. Additions to proposed rules are **underlined and boldfaced**, while deletions from proposed rules are printed within [[double brackets]].

sample of the waste, compare the properties of the waste with the criteria for a hazardous waste in subsection B, determine whether the waste is hazardous, and submit either a certification or a disclosure to the Agency, in accordance with the procedures set forth in this regulation.

2. The requirements for evaluating a waste shall apply whenever the composition of a waste is altered so that the samples used in the evaluation are no longer representative of the waste.

3. This evaluation shall be of the individual waste prior to any mingling or combining with other wastes. If wastes are subsequently mingled or combined, the generator shall also evaluate the waste resulting from the mingling or combining.

E. Sample collection. The person evaluating the waste shall obtain a representative sample of the waste for testing at the time when the hazardous properties being measured pose the greatest hazard. The person shall consider the following variations in the waste composition and their causes in collecting a sample for evaluation:

1. Variations in the process by which the waste is produced.

2. Variations in chemical composition and physical state.

3. Any other variations indicated by past experience with the waste or similar wastes.

F. Comparison of properties.

1. Generally. The person evaluating the waste shall use such test procedures and conditions as are necessary to determine whether the waste has any hazardous properties. Such tests shall include a determination of the chemical composition of the representative sample of the waste and a quantitative analysis to determine the concentration of any component in List 1 or List 2 that is known or suspected to be in the waste. To evaluate the flammable, irritative, corrosive, or toxic properties of the waste, the person producing the waste may utilize experience with the waste or similar wastes or data collected on the components of the waste in lieu of the tests that defined the properties in HW 1. However, if such experience or data does not conclusively demonstrate that the particular property for the waste is either hazardous or not hazardous, the person shall conduct the appropriate tests for that property.

2. Flammable materials. Whenever the flash point of a waste is to be determined, one of the following test procedures shall be used. The test chosen shall be appropriate for the characteristics of the waste that is tested.

a. Standard Method of Test for Flash Point by Tag Closed Tester (ASTM D56-70).

b. Standard Method of Test for Flash Point of Aviation Turbine Fuels by Setaflash Closed Tester (ASTM D3243-73).

c. Standard Methods of Test for Flash Point of Liquids by Setaflash Closed Tester (ASTM D3278-73).

d. Standard Method of Test for Flash Point by Pensky-Martens Closed Tester (ASTM D93-73) or alternate tests authorized in this standard.

For any waste containing components with different volatilities and flash points and having a flash point higher than 20°F (−6.67°C) according to the test procedure employed, a second test shall be conducted on a sample of the liquid portion of the material that remains after evaporation in an open beaker (or similar container), under ambient pressure and temperature (20 to 25°C) conditions, to 90 percent of original volume or for a period of four hours, whichever occurs first, with the lower flash point of the two tests being the flash point of the material.

3. Toxic materials. Any person who is determining whether a waste is a toxic mateial may elect to use the following modification to the LC_{50} and LD_{50} test procedures if the actual LC_{50} or LD_{50} is unknown:

a. A single dosage or exposure level equivalent to the maximum dosage or exposure level in HW 1 B.37. which establishes that a material is a toxic material shall be administered to a test population of ten animals. The animals shall be the kind specified in the LC_{50} and LD_{50} test procedures. The animals are then observed for a period of 14 days or 96 hours whichever is applicable. If five or more of the test animals die, the waste shall be classified as a toxic material. If three or four of the test animals die, then either the waste shall be classified as a toxic material or additional dosage or exposure levels shall be tested and the actual LD_{50} or LC_{50} determined. If less than three of the ten test animals die, then the waste shall not be classified as a toxic material.

G. Results of evaluation. The person evaluating the waste shall either file a certification that the waste is not a hazardous waste, or, if the person determines that the waste is hazardous, file a disclosure and manage the waste in accordance with the requirements of these regulations.

H. Contents of a certification.

1. Any person who evaluates a waste and determines that it is not a hazardous waste shall prepare a certification containing the following information:

a. The sampling procedure and the reasons for determining that the sample is representative of the waste.

b. The chemical composition of the waste and the anticipated fluctuations in the chemical composition that will occur during normal operations.

c. The concentration of any component in List 1 or List 2 that is in the waste.

d. The results of any other tests conducted to compare the properties of the waste with the criteria for a hazardous waste set forth in subsection B. of this regulation.

e. An evaluation of the accuracy and precision of any tests conducted.

f. A statement that the waste does not have any hazardous properties.

g. The name, address, and signature of the person who produces the waste and submits the certification.

h. Any other information that the person deems important.

2. No person shall make a false statement in a certification. The certification shall be submitted under oath.

I. Submission of a certification to the agency.

1. Existing wastes. Any person who evaluates a waste that is being produced on the effective date of these regulations and who determines that it is not a hazardous waste shall submit a certification to the Agency within one year after the effective date of these regulations.

2. New wastes.

a. Any person who produces a waste within the State of Minnesota that is not being produced on the day these hazardous waste regulations take effect and that is not an exempt waste or a hazardous waste shall submit a certification to the Agency within 90 days after producing the waste. The waste shall not be disposed of or change possession until at least thirty (30) days after the certification is filed with the Agency.

b. Any person who produces a waste outside the State of Minnesota that is not being transported to a location within the State of Minnesota on the day these regulations take effect and that is not an exempt waste or a hazardous waste and who intends to transport the waste to a location within the State of Minnesota shall submit a certification to the Agency before the waste is transported to a location within the State of Minnesota. The waste shall not be transported into Minnesota until at least thirty (30) days after the certification is filed with the Agency.

J. Agency determination that a waste is hazardous.

1. Upon the filing of a certification demonstrating that a waste is not hazardous, the waste shall not be considered a hazardous waste unless a contrary determination is subsequently made by the Agency. Nothing contained in a certification, however, shall preclude the Agency from determining that a waste is a hazardous waste.

2. The Director may decide that a certification is not adequate to determine whether a waste is a hazardous waste. If the Director decides that a certification is not adequate, the person who submitted the certification shall be notified by the Director in writing of such decision, the reasons therefor, and the additional tests and evaluations that are necessary. If these tests and evaluations are not reported within thirty (30) days, the waste shall be managed as a hazardous waste and the person who produces the waste shall be considered a generator until the Agency has determined whether the waste is hazardous or not.

3. The Director or his agent may enter upon the property of the person who produced the waste to take samples of any waste and may conduct tests, analyses, and evaluations to determine whether the waste is a hazardous waste. The results of the tests, analyses, and evaluations shall be made available, upon request, to the person.

4. The Director may recommend to the Agency that a waste be classified as a hazardous waste. The

KEY: Existing rules are printed in standard type face. Proposed additions to existing rules are printed in **boldface**, while proposed deletions from existing rules are printed within [single brackets]. Additions to proposed rules are **underlined and boldfaced**, while deletions from proposed rules are printed within [[double brackets]].

Director shall notify the person producing the waste in writing of the recommendation and the person shall have at least thirty (30) days to submit any additional material or written comments to the Agency before the Agency makes a determination. The Agency shall notify the person in writing of its decision.

K. Subsequent evaluations. The Director may request a person who produces a waste that has been certified as a non-hazardous waste to reevaluate the waste if there is a change in the management of the waste or new evidence indicates that the waste may be hazardous.

HW 3 Generation of hazardous waste.

A. Applicability. This regulation prescribes the duties of a generator.

B. Production of a hazardous waste. No person shall produce a hazardous waste within the State of Minnesota or produce a hazardous waste outside the State of Minnesota that is transported to a location within the State of Minnesota unless that person has adequate financial resources to insure that the hazardous waste is managed in accordance with these regulations.

C. Preparation of a disclosure. Each generator shall prepare a disclosure for each hazardous waste that he produces or transports, except used crankcase oil that is collected by a transporter registered pursuant to HW 5 E.

D. Contents of a disclosure.

1. Each generator in its disclosure shall include the following information:

a. The sampling procedure and the reasons for determining that the sample is representative of the waste.

b. The results of any tests conducted to compare the properties of the waste with the criteria for a hazardous waste set forth in subsection B. of HW 2 and an evaluation of the accuracy and precision of any tests conducted.

c. The chemical composition of the waste and the anticipated fluctuations in the chemical composition that will occur during normal operations.

d. The hazardous properties of the waste.

e. A list of special handling procedures, labels and safety equipment necessary for safe handling and storage of the hazardous waste.

f. The name, address, telephone numbers, and title of the individual at the generator's facility responsible for arranging for the management of the hazardous waste.

g. A copy of procedures for personnel to follow in the case of spills of the hazardous waste.

h. A summary of the following relating to the management of the hazardous waste for the year preceding the filing of the disclosure or for the period since the last disclosure was filed if that filing was more than one year ago:

(1) The amount of the hazardous waste produced.

(2) The names and identification numbers of the transporters utilized.

(3) The names of the hazardous waste facilities utilized, and, as applicable:

(a) the numbers of the Hazardous Waste Facility permits issued by the Agency for those facilities located in the State of Minnesota.

(b) The addresses of those facilities located outside the State of Minnesota.

(c) The name of the waste water treatment works to which a sewered hazardous waste was discharged.

(d) The NPDES or State Disposal Permit number for discharges to sewers other than a municipal sewer system.

(4) The amounts spilled, amounts recovered, and any resultant damages from spills of the hazardous waste.

i. A prediction of the following relating to the management of the hazardous waste for the year immediately following the filing of the disclosure:

(1) The estimated amounts to be produced.

(2) The names and identification numbers of the transporters to be used.

(3) The frequency with which the hazardous waste is expected to be transported or discharged.

(4) The names of the hazardous waste facilities to be involved in the management of the hazardous waste and, as applicable:

(a) The numbers of the Hazardous Waste Facility Permits issued by the Agency for those facilities located in the State of Minnesota.

(b) The addresses of those facilities located outside the State of Minnesota.

(c) The name of the waste water treatment works to which a sewered hazardous waste was discharged.

(d) The NPDES or State Disposal Permit number for discharges to sewers other than a municipal sewer system.

j. Any other information that the Generator deems important.

2. No person shall make a false statement in a disclosure. The disclosure shall be submitted under oath.

E. Submission of a disclosure to the agency.

1. Existing hazardous waste. Each generator who is producing a hazardous waste in the State of Minnesota or who is producing a hazardous waste outside the State of Minnesota that is being transported to a location within the State of Minnesota on the day these hazardous waste regulations take effect shall submit a disclosure to the Agency within one year after the effective date of these regulations.

2. New hazardous wastes.

a. Any generator who produces a hazardous waste in the State of Minnesota that is not being produced on the day these hazardous waste regulations take effect shall submit a disclosure to the Agency within 90 days after first producing the hazardous waste. The hazardous waste shall not be disposed of or change possession until at least thirty (30) days after the disclosure is filed with the Agency.

b. Any generator who produces a hazardous waste outside the State of Minnesota that is not being transported to a location within the State of Minnesota on the day these regulations take effect shall file a disclosure with the Agency before the hazardous waste is transported to a location within the State of Minnesota. The hazardous waste shall not be transported to a location within the State of Minnesota until at least thirty (30) days after the disclosure is filed with the Agency.

3. Annual resubmission of a dislosure.

a. After submitting its first disclosure, each generator who is required to submit a disclosure pursuant to subparagraph 1 shall submit a subsequent disclosure according to the following schedule if any hazardous waste has been produced or managed since the first disclosure:

FIRST LETTER IN NAME OF GENERATOR	MONTH OF SUBMISSION (The disclosure shall be made the first time the indicated month occurs after the regulations have been in effect for a period of two years.)
L-N	January
A-C	March
D-G	May
T-Z	July
O-S	September
H-K	November

Each such generator shall submit a new disclosure on the anniversary date of the second disclosure if any hazardous waste has been produced or managed in the preceding year.

b. Any generator who is required to file a disclosure pursuant to subparagraph 2. shall submit a new disclosure on the anniversary date of the first disclosure.

c. Any generator who does not submit a disclosure because the hazardous waste was not produced or transported during the preceding period or year shall inform the Agency of such fact and shall comply with the requirements for submitting a disclosure for a new hazardous waste in the event a hazardous waste is again produced or transported.

F. Preparation of hazardous waste shipping papers. Each generator shall prepare hazardous waste shipping papers for each hazardous waste in accordance with HW 8.

G. Preparation of hazardous waste labels.

1. Each generator shall attach a "Hazardous Waste" label to each container and portable tank containing hazardous waste in accordance with the following requirements:

KEY: Existing rules are printed in standard type face. Proposed additions to existing rules are printed in **boldface**, while proposed deletions from existing rules are printed within [single brackets]. Additions to proposed rules are **underlined and boldfaced**, while deletions from proposed rules are printed within [[double brackets]].

a. The label shall not be smaller than 4″ by 6¼″. The letters, "HAZARDOUS WASTE," shall not be less than ¾″ high. Except for size and color, the label shall have the appearance of the following design:

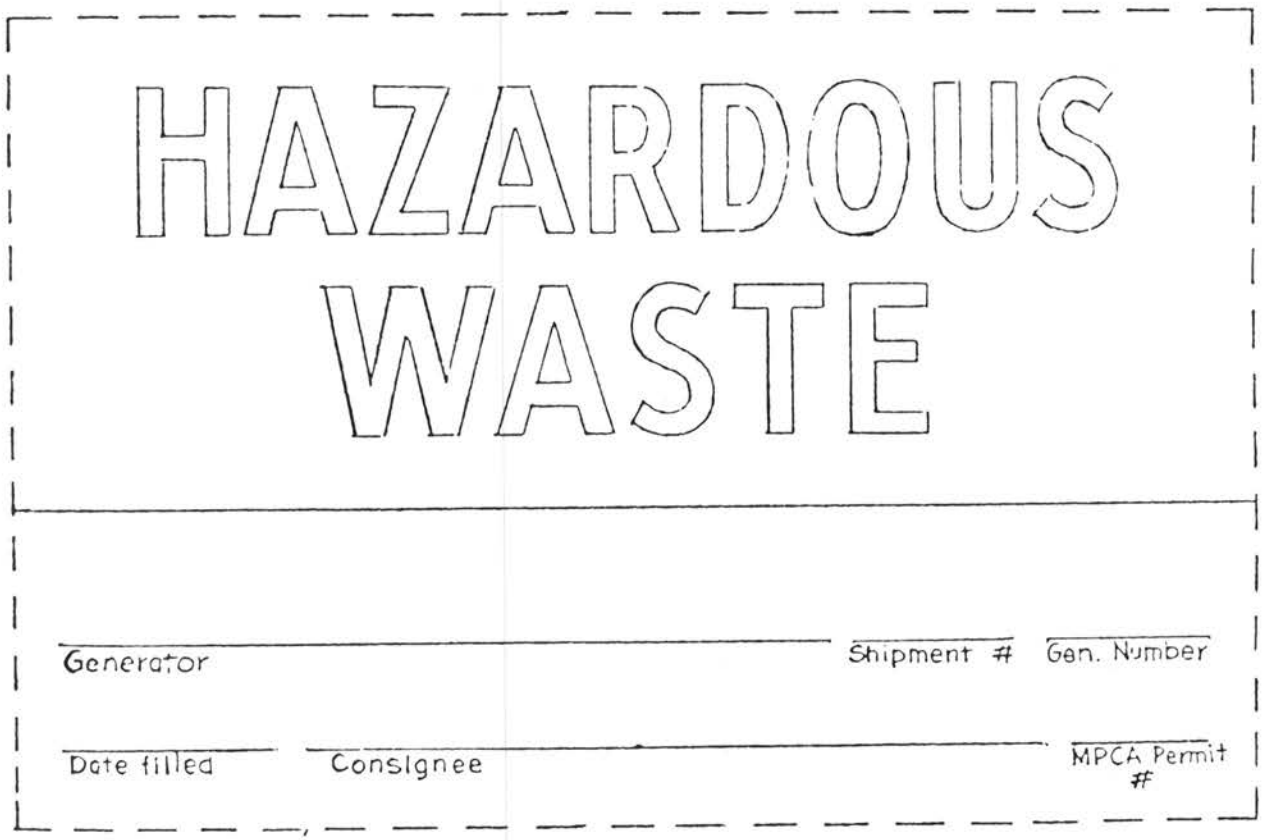

b. The lettering and lines of a "Hazardous Waste" label shall be black and the background color shall be a standard fluorescent pink.

c. In addition to the words, "Hazardous Waste", the label placed on portable tanks and containers shall contain the following information:

(1) The name of the generator.

(2) The identifying shipment number from the shipping papers required in HW 8.

(3) The date the container or portable tank was finally filled.

(4) The name of the hazardous waste facility that is responsible for the ultimate disposition of the hazardous waste and the permit number if that facility is licensed by the Agency pursuant to these regulations.

d. The "Hazardous Waste" label must be capable of withstanding open weather exposure for no less than 30 days without substantial reduction in effectiveness.

2. The container or portable tank shall be labeled and marked in a manner that is suitable for interstate commerce.

3. Any generator or other person who maintains a storage tank containing hazardous waste shall attach a "Hazardous Waste" label to the storage tank in a legible and conspicuous manner. A "Hazardous Waste" label shall be plainly visible and legible to any person who may operate any outlet valve.

H. Containers and tanks. Each generator shall put hazardous waste only into containers or tanks that comply with the requirements of HW 4 for storage of hazardous waste in containers and tanks at hazardous waste facilities.

I. Proper hazardous waste management. Each generator shall take all necessary measures to retain sufficient control over its hazardous waste so that the generator can insure that the hazardous waste will be managed in accordance with these regulations. If at any time the hazardous waste is being improperly managed by anyone, the generator shall take all necessary steps to correct such improper management.

HW 4 Location, operation, and closure of a hazardous waste facility.

A. Applicability. This regulation establishes criteria for the location, operation, and closure of a hazardous waste facility. This regulation, however, does not apply to a waste water treatment works that is operated pursuant to an NPDES Permit or State Disposal Permit.

B. Hazardous waste facility location.

1. No person shall establish, construct, or operate a hazardous waste facility in a wetland, in a floodplain, or within shoreland.

2. No person shall establish, construct, or operate a hazardous waste facility in a location where the topography, geology, hydrology, or soil is unsuitable for the protection of the groundwater and the surface water.

3. No person shall establish, construct or operate a hazardous waste facility in a location where such activity would result in emissions of air contaminants causing the violation of the ambient air quality standards established in Minn. Reg. APC 1.

C. Hazardous waste facility operation.

1. Generally. No person shall operate a hazardous waste facility except in conformance with the following requirements:

a. The facility operator shall prepare procedures for personnel to follow in the case of spills of hazardous waste and in the case of fire and other emergencies. The facility operator shall post these procedures in a conspicuous place at the facility site.

b. The facility operator shall have safety equipment available at the facility site for use during spills, fires, and other emergencies.

c. The facility operator shall have available at all times written procedures for handling spills, fires, and other emergencies. The facility operator shall train and instruct all personnel at the facility site in these procedures. The facility operator shall maintain records of the training and instruction programs that are held.

d. The facility operator shall construct and begin operating a site monitoring system that is approved by the Agency before accepting or storing any hazardous waste at the facility.

e. The facility operator shall control access to the facility by the use of fences, gates, locks and other similar methods and allow access only to persons who are knowledgeable in the safety and emergency procedures needed for handling the hazardous waste. The facility operator shall provide security against unauthorized entry onto the site.

f. The facility operator shall have communication equipment available at the site for summoning aid in an emergency.

g. The facility operator shall maintain lighting at the facility in a manner sufficient to ensure safety and proper operation if the facility is operated during hours of darkness.

h. The facility operator shall not allow scavenging at the facility.

i. The facility operator shall prevent thejvscharge of hazardous waste from the facility to the surface waters or groundwaters of the State. The facility operator shall prevent hazardous waste from entering drains, sewer inlets, storm sewers, sanitary sewers, doorways, vents, tunnels, pipes, windows, or areas with permeable earth or soil floors.

j. The facility operator shall handle shipping papers as provided in HW 8.

k. The facility operator shall not accept waste from outside the State of Minnesota unless specifically authorized to do so by his Hazardous Waste Facility Permit and unless written approval is obtained from the Director.

2. Acceptance of hazardous waste.

a. No facility operator shall accept a shipment of hazardous waste that does not meet the following requirements:

(1) The shipping papers are complete.

(2) Each container and portable tank containing hazardous waste is properly labeled.

(3) The shipping papers and the labels are consistent.

b. No facility operator shall accept a shipment of

KEY: Existing rules are printed in standard type face. Proposed additions to existing rules are printed in **boldface**, while proposed deletions from existing rules are printed within [single brackets]. Additions to proposed rules are **underlined and boldfaced**, while deletions from proposed rules are printed within [[double brackets]].

hazardous waste that the facility operator is not allowed to manage under the Hazardous Waste Facility Permit.

c. The facility operator shall schedule the arrival of hazardous waste in a manner that minimizes the potential problem of incompatible wastes coming in contact.

3. Storage of hazardous waste in containers and tanks.

a. The facility operator shall segregate incompatible wastes stored in containers and tanks to minimize the potential problem of incompatible wastes coming in contact during storage.

b. The facility operator shall regularly inspect all containers and tanks to determine if any leaks have occurred and in the event a leak has occurred, take necessary action pursuant to subparagraph 1.c.

c. The facility operator shall store hazardous waste in containers and tanks in a manner such that the facility operator can locate any shipment of hazardous waste and any hazardous waste from any particular generator stored on the site.

d. The facility operator shall store hazardous waste in containers and tanks that are located out-of-doors only within a liner and dike system which meets the following requirements:

(1) The liner and dike system shall have a permeability rate no greater than 10^{-7} centimeters per second when being subjected to a head of one foot of water and shall be of a composition that will not increase in permeability as a result of contact with the hazardous waste.

(2) The liner and dike system shall be constructed so as to hold a volume equal to the volume of the largest storage tank plus the total capacity of all containers and portable tanks plus one foot of freeboard.

(3) The interface between the dike and underlying liner shall be constructed so as to provide a seal against movement of hazardous waste or solutions thereof.

(4) The dike shall be constructed in a manner that provides necessary ramps for vehicles needing access to the storage areas.

e. The facility operator shall store hazardous waste in containers that are located out-of-doors in a manner that complies with the following requirements:

(1) The facility operator shall stack containers with a capacity of less than 45 gallons in rows no more than 30 feet in length, five feet in width, and six feet in height, unless otherwise stated in the Hazardous Waste Facility Permit.

(2) The facility operator shall store containers with a capacity of 45 gallons or more in rows no more than 30 feet in length and two containers in width and shall not stack the containers, unless otherwise stated in the Hazardous Waste Facility Permit.

(3) The facility operator shall maintain a minimum of five feet between rows of containers of hazardous waste.

(4) If exposure of the containers to moisture or direct sunlight will create a hazardous condition or adversely affect the containers' ability to contain the hazardous waste, the facility operator shall store containers in an area with overhead roofing or other covering that does not obstruct the visibility of the labels.

f. No facility operator shall store hazardous waste in containers and tanks unless the containers and tanks meet the following requirements:

(1) Containers and tanks shall be of sturdy, leak-proof construction. Containers shall be of adequate wall thickness, of adequate weld, hinge, and seam strength, and of sufficient material strength to withstand side and bottom shock, while filled, without impairment of the ability of the container or tank to fully contain the hazardous waste.

(2) Except during filling or emptying, the container or tank shall be securely closed so that there is no escape of hazardous waste or its vapors. In the event that state or federal law requires a tank to be vented, the tank shall be equipped with a vapor recovery system.

(3) Lids, caps, hinges, or other closure devices shall be of sufficient strength and construction so that when closed they will withstand dropping, overturning, or other shock without impairment of the container's or tank's ability to fully contain the hazardous waste. Gasketed closures shall be fitted with gaskets of material that is sufficient to prevent leakage and that will not be deteriorated by the contents.

(4) Containers, tanks, and their closures shall be constructed of materials or protected by a liner that will not undergo chemical reaction with the contained waste or with other substances that the container may foreseeably contact if such a reaction may impair the container's or tank's ability to contain the waste.

(5) Corroded or damaged containers or tanks shall not be used to contain hazardous wastes.

(6) Containers and portable tanks of hazardous waste shall be suitable for interstate transportation.

g. Hazardous waste shall not be stored in containers or tanks for more than one year.

4. Reuse of hazardous waste containers. The facility operator shall handle containers and tanks that have contained hazardous waste in one of the following manners:

a. Rinse, clean, and drain all hazardous waste from the containers and tanks prior to leaving the hazardous waste facility.

b. Manage the containers and tanks as a hazardous waste.

c. Reuse the containers or tanks without rinsing, cleaning, and draining if all of the following conditions are met:

(1) The containers and tanks be used to store or transport one type of hazardous waste exclusively.

(2) The containers and tanks are closed until reuse.

(3) The containers and tanks be suitable for use in accordance with HW 4.

5. Disposal of hazardous waste.

a. The facility operator shall not discharge hazardous waste directly into the saturated zone by such means as injection wells or other devices used for the purposes of injecting materials.

b. The facility operator shall not dispose of hazardous waste by open burning.

c. The facility operator shall not engage in activities that would result in emissions of air contaminants causing the violation of the ambient air quality standards established in Minn. Reg. APC 1.

d. The facility operator shall not dispose of hazardous waste in a manner that contaminates the soil unless such disposal is authorized in a Hazardous Waste Facility Permit.

6. Records and reports.

a. The facility operator shall submit the site monitoring results to the Agency on a quarterly basis.

b. The facility operator shall file a monthly summary with the Director that identifies the amount of hazardous waste managed, the names of the generators of the hazardous waste, and the identity of the types of hazardous waste managed.

c. The facility operator shall maintain a log at the facility site that indicates the date that each shipment arrived, the shipment number, the name of the generator of the shipment, the name of the transporter who delivered the shipment, the location of the shipment at the facility, and the date that the hazardous waste was processed, disposed of, or transported from the facility. The facility operator shall submit the log to the Agency upon the request of the Director.

d. The facility operator shall submit to the Agency the records of personnel training and instruction in the procedures to follow in handling spills, fires, and other emergencies upon the request of the Director.

e. For Hazardous Waste Land Disposal Facilities, the facility operator shall maintain a ledger for each cell containing the names of the generators of the hazardous wastes, the dates of acceptance of each shipment of hazardous waste, the amount in gallons or tons of each shipment, the shipment numbers, and the chemical composition of each shipment of hazardous waste. The facility operator shall submit the ledger to the Agency at the closure of each cell or upon the request of the Director.

D. Hazardous waste facility closure other than hazardous waste land disposal facilities.

1. The facility operator shall give the Agency a minimum of 90 days written notice prior to the closing of the facility. The written notice shall include:

a. Anticipated last day of operation;

b. The existing inventory count and the inventory reduction schedule; and

c. A discussion of how conditions of the Hazardous Waste Facility Permit will be met.

2. The facility operator shall remove, before the

KEY: Existing rules are printed in standard type face. Proposed additions to existing rules are printed in **boldface**, while proposed deletions from existing rules are printed within [single brackets]. Additions to proposed rules are **underlined and boldfaced**, while deletions from proposed rules are printed within [[double brackets]].

facility is closed, all hazardous waste from the facility unless otherwise authorized by the Hazardous Waste Facility Permit.

3. The facility operator shall meet the conditions of the facility's Hazardous Waste Facility Permit for closing the facility. This provision shall apply even if the Permit has expired or has been suspended or revoked.

4. The facility operator shall submit certification to the Agency by a registered professional engineer that the facility has been closed in accordance with the requirements of this regulation and the Hazardous Waste Facility Permit.

E. Hazardous waste land disposal facility closure.

1. The facility operator shall give the Agency a minimum of one hundred and eighty (180) days written notice prior to closing a Hazardous Waste Land Disposal Facility. The written notice shall include:

a. Anticipated last day of operation;

b. A discussion of how the requirements of this regulation shall be met; and

c. A discussion of how conditions of the Hazardous Waste Facility Permit shall be met.

2. The facility operator shall close the Hazardous Waste Land Disposal Facility in accordance with the following requirements:

a. The facility operator shall close access to the facility and prevent additional waste disposal.

b. The facility operator shall provide, construct, and maintain measures to protect groundwater and surface water and to control air emissions from the facility.

c. The facility operator shall cover the hazardous waste with an adequate amount of cover material to eliminate blowing of the hazardous waste and to minimize leachate production by the hazardous waste.

d. On all areas that have been covered with soil, the facility operator shall cover the area with adequate topsoil and provide vegetation that is sufficient to prevent erosion.

e. The facility operator shall establish and maintain a final grade that promotes surface water runoff without excessive erosion and shall divert surface water drainage around and away from the disposal area.

f. The facility operator shall construct, maintain and operate a gas monitoring system, a groundwater monitoring system, and a surface water monitoring system.

g. The facility operator shall record a detailed description, including a plat, with the county registrar of deeds. The description shall include a statement that the site has been used for the disposal of hazardous wastes, the general types and location of wastes, depth of fill, and other information of interest to potential land owners.

h. The facility operator shall file with the Agency and with the appropriate county office a final plot plan and cross sections that delineate the location of each major type of waste disposed of at the facility.

3. The facility operator to whom a Hazardous Waste Facility Permit has been issued shall close the facility as required by the Permit. Such a facility operator shall submit certification to the Agency by a registered professional engineer that the Hazardous Waste Land Disposal Facility has been closed in accordance with the requirements of this regulation and the Hazardous Waste Facility Permit. This provision shall apply even if the Permit has expired or been suspended or revoked.

4. A facility operator who closes a Hazardous Waste Land Disposal Facility shall perform the following long term maintenance, monitoring, and surveillance of the facility:

a. Maintain the impervious liner and final cover.

b. Maintain surface water drainage in a manner that minimizes erosion.

c. Treat contaminated surface water runoff.

d. Collect and treat leachate.

e. Continue the gas monitoring system, the groundwater monitoring system, and a surface water monitoring system for the time period that the hazardous waste may pose a threat to the environment.

f. Remove hazardous waste from the facility in the event the hazardous waste poses a threat to air, land, or water resources of the state, or public health and safety. The facility operator shall perform such removal regardless of the cause of the threat.

5. A facility operator who closes a Hazardous Waste Land Disposal Facility shall establish and continue in effect financial arrangements that are adequate

to finance the long-term maintenance, monitoring and surveillance required by this regulation.

F. Closure of unpermitted hazardous waste facilities.

1. The facility operator of a Hazardous Waste Facility that is in operation on the effective date of these regulations who does not apply for a Hazardous Waste Facility Permit pursuant to HW 6 shall close the facility in accordance with the requirements of this regulation.

2. A facility operator who closed or abandoned a Hazardous Waste Land Disposal Facility prior to the effective date of these regulations shall comply with the requirements of this regulation.

G. Small hazardous waste containerized storage facilities. The facility operator of a Hazardous Waste Containerized Storage Facility with a capacity of less than 5,000 gallons (18,927 liters) of hazardous waste in containers and tanks shall not be required to comply with the requirements of subparagraph 1. of paragraph B., of subparagraphs 1.d., 1.f., 2.b., 6.a., 6.b., 6.c., and 6.d. of paragraph C., and subparagraphs 1., 3. and 4. of paragraph D., provided no other hazardous waste facility is located at the same site.

HW 5 Transportation of hazardous waste.

A. Applicability. This regulation establishes criteria for the transportation of hazardous waste by any person to insure that hazardous wastes are transported in a manner which minizes risks to human health and the environment.

B. Transporting hazardous waste. No person shall transport a hazardous waste except in conformance with the following requirements:

1. All containers of hazardous waste shall be reasonably secured against movement within the vehicle by which the hazardous waste is being transported.

2. Tank vehicles shall not be left unattended during the loading or unloading of a hazardous waste.

3. No tools or equipment likely to damage the effectiveness of the closure of any container or adversely affect the ability of a container to contain a hazardous waste shall be used for loading or unloading hazardous waste.

4. Hazardous waste shall not be transported in the same vehicle with food or fiber intended for human or animal consumption or use.

5. Hazardous waste shall not be transported in the same vehicle with materials with which it is incompatible.

6. Broken or leaking containers of hazardous waste or containers with an outside surface that is contaminated with hazardous waste shall neither be accepted for transportation nor transported. If during the course of transportation, a container is discovered to be broken or leaking, the container shall be removed from the public highway to the nearest safe location and isolated pending proper disposition in the safest and most expeditious manner possible. The generator shall render all reasonable assistance to the transporter in repackaging, packing and cleaning up the waste so that the trip may be resumed.

7. No container or tank containing hazardous waste shall be transported unless the container or tank is properly labeled as required by HW 3. Destroyed, lost or detached labels shall be replaced.

8. Cargo tanks used to transport any hazardous waste shall be tested, inspected, and maintained to insure that there is no unintentional release or leakage of the waste during transportation. Every cargo tank and every compartment of a cargo tank used to transport hazardous wastes shall fulfill the applicable requirements set forth in 49 C.F.R. § 177.824 (1976). No hazardous waste of a type or volume that is beyond the capability of the cargo tank shall be transported in the cargo tank.

9. The transporter shall not deliver the hazardous waste to a hazardous waste facility located in the State of Minnesota, if the facility operator has not obtained a Hazardous Waste Facility Permit from the Agency.

10. The driver of a vehicle transporting hazardous waste shall maintain possession of the hazardous waste shipping papers during transportation as follows:

a. When the driver is at the vehicle's controls the copies shall be either:

(1) Within his immediate reach while he is restrained by the lap belt, or

KEY: Existing rules are printed in standard type face. Proposed additions to existing rules are printed in **boldface**, while proposed deletions from existing rules are printed within [single brackets]. Additions to proposed rules are **underlined and boldfaced**, while deletions from proposed rules are printed within [[double brackets]].

(2) Readily visible to a person entering the driver's compartment or in a folder that is mounted to the inside of the door on the driver's side of the vehicle.

b. When the driver is not at the vehicle's controls, the copies shall be displayed as follows:

(1) In a holder that is mounted to the inside of the door on the driver's side of the vehicle, or

(2) On the driver's seat in the vehicle.

11. The transporter shall comply with all applicable requirements of HW 8 relating to shipping papers.

C. Time in transit.

1. Any transporter who has a spill or leak of hazardous waste during transit shall comply with the provisions of HW 10.

2. In the event that a shipment of hazardous waste is not accepted by the facility operator within 48 hours after arrival at the destination or in the event the facility operator does not sign the hazardous waste shipping papers, the transporter shall immediately return the shipment of hazardous waste to the generator and the generator shall accept it. If the wastes of two or more generators have been comingled, each generator shall accept a portion of the hazardous waste equal to the generator's contribution to the total volume of waste.

D. Spills in transit.

1. Any transporter who has a spill or leak of hazardous waste during transit shall comply with the provisions of HW 10.

2. In the case of a spill or leakage of hazardous waste during transit, the amount spilled, the amount recovered, the location of the spill site, and the disposition of the spilled wastes and any contaminated material shall be noted on the hazardous waste shipping papers by the transporter.

3. The transporter shall notify the generator as soon as possible of any spill or leak during transit.

4. The generator shall maintain a written summary of all spills and leaks that occur during transit for a period of five years.

E. Registration of hazardous waste transporters. Any person who transports hazardous waste that originates in Minnesota or who transports hazardous waste to a location in Minnesota shall register with the Agency and obtain an identification number prior to transporting the hazardous waste. The transporter shall keep the Agency advised of his current address.

F. Transportation of waste crankcase oil. A transporter of waste crankcase oil shall maintain a log that shows the source and disposition of all waste crankcase oil. Upon the written request of the Director, the transporter shall submit any information from the log that the Director requests. The transporter shall retain all information for a period of two years.

HW 6 The hazardous waste facility permit program.

A. Applicability. This regulation governs the application procedures, the issuance, and the conditions of a Hazardous Waste Facility Permit. The provisions in this regulation and the Agency's Rules of Procedure, Minnesota Regulations MPCA 1-13, shall be construed to complement each other.

B. Other permits. Obtaining a Hazardous Waste Facility Permit pursuant to this regulation shall not exempt a person from any requirement to obtain any other applicable federal, state, and local permits.

C. Permit required. No person shall do any of the following without obtaining a Hazardous Waste Facility Permit from the Agency:

1. Establish, construct, operate, close, or abandon a hazardous waste facility;

2. Make any change in, addition to, or extension of a permitted hazardous waste facility or part thereof;

3. Effect any expansion, production increase, or process modification that results in new or increased capabilities of a permitted hazardous waste facility; or

4. Operate such a permitted hazardous waste facility, or part thereof, that has been changed, added to, or extended or that has new or increased capabilities.

D. Submission of hazardous waste facility permit application.

1. Any person who is operating a hazardous waste facility on the day these regulations take effect shall submit to the Agency a preliminary application for a hazardous waste facility permit within 180 days of the effective date of these regulations; except any person who, on the effective date of these regulations, is operating a hazardous waste containerized storage facility that is not in the same location as any other type of hazardous waste facility shall submit a preliminary application for a Hazardous Waste Facility Permit for such facility according to the following schedule:

The First Letter in the Name of Applicant	Application Due Date
L-N	10 months after effective date
A-C	12 months after effective date
D-G	14 months after effective date
T-Z	16 months after effective date
O-S	18 months after effective date
H-K	20 months after effective date

2. Any person who has submitted a preliminary application for a Hazardous Waste Facility Permit shall submit a final application after the person has received the Director's comments on the preliminary application.

3. In the event that a person operates hazardous waste facilities at more than one location, a separate application shall be filed by the person for each facility.

4. In the event that a person operates more than one type of hazardous waste facility at one location, then the person shall file a single application containing all the required information for each type of hazardous waste facility that will be at that location.

5. When the application is for a change, addition to, or extension of a permitted hazardous waste facility or part thereof or when the application is for new or increased capabilities at a permitted hazardous waste facility, the Agency may waive in writing the submission of plans and specifications or any parts thereof.

6. The Agency shall not accept a permit application unless the application contains all the information required by these regulations. If a permit application is incomplete or deficient, the Director shall advise the applicant of such incompleteness or deficiency. Further processing of the application may be suspended until the applicant has supplied the necessary information or otherwise corrected the deficiency.

E. Granting and reissuance of permits.

1. The Agency shall not grant or reissue a Hazardous Waste Facility Permit unless the Agency determines that the hazardous waste facility and its operation will comply with the requirements of applicable pollution control statutes and regulations.

2. The Agency shall not grant or reissue a Hazardous Waste Facility Permit until the permittee provides documentation of financial arrangements that are adequate to provide for:

a. The proper removal, transportation, and disposal of the total amount of hazardous waste that the facility has the capacity to store; and

b. The closure of the facility in accordance with these regulations and the conditions of the permit.

F. Review of permits.

1. Any person who wishes to continue to operate a hazardous waste facility shall, at least 180 days before his Hazardous Waste Facility Permit expires, submit a written request to the Agency for reissuance of the permit.

2. The Agency shall review the request for reissuance. In reviewing the request, the Agency shall consider:

a. Whether the permittee is in compliance with or has complied with terms, conditions, requirements, and schedules of compliance of the expiring permit, and with applicable pollution control statutes and regulations, including any additions, revisions or modifications thereto.

b. Whether there have been changes in the state of the art during the term of the permit.

c. Whether the Agency has up-to-date information on the nature of the facility, production levels, the operational practices and monitoring data.

d. Whether any modifications to the permit are necessary. In conducting the review, the Agency may require additional information to be submitted to aid the review.

G. Hazardous waste facility permit general conditions.

1. All Hazardous Waste Facility Permits shall have the following general conditions:

a. The permittee shall establish, construct, operate, and close the facility in accordance with:

(1) The plans, specifications, and reports identified in the permit;

KEY: Existing rules are printed in standard type face. Proposed additions to existing rules are printed in **boldface**, while proposed deletions from existing rules are printed within [single brackets]. Additions to proposed rules are **underlined and boldfaced**, while deletions from proposed rules are printed within [[double brackets]].

(2) The Agency's hazardous waste regulations; and

(3) The conditions of the permit issued by the Agency.

b. The permittee shall allow any authorized Agency employee or agent to enter upon any property — public or private — to have access to and copy any applicable records, to inspect the hazardous waste facility and its operations, to sample any waste, and otherwise to obtain necessary information pertaining to the construction, operation, and closure of the hazardous waste facility and the hazardous waste managed there.

c. The permittee shall, upon the request of any authorized Agency employee or agent, disclose the times at which any operation occurs.

d. The permittee shall not store volumes of hazardous wastes in excess of the volumes approved by the Agency in the permit.

e. The permittee shall manage only those types of hazardous waste that are approved by the permit.

f. The permit shall have a term not to exceed five years.

2. Hazardous Waste Facility Permits for facilities that existed prior to the effective date of these regulations may in addition provide interim dates for achievement of compliance with applicable regulations, other relevant laws and conditions of the permit.

3. Hazardous Waste Facility Permits for new facilities shall, in addition, have the following general conditions:

a. The permittee shall not begin operation of the hazardous waste facility until the permittee has submitted a certification by a registered professional engineer that the hazardous waste facility has been constructed according to the engineering plans and specifications as approved, with any modifications, by the permit.

b. The permittee shall construct and commence operation of the facility within the time schedule specified in the permit.

4. If the Hazardous Waste Facility Permit authorizes the permittee to accept hazardous waste from outside the State of Minnesota, the permittee shall advise the Director at least 30 days in advance of the intention to accept hazardous waste from outside the State of Minnesota. The permittee shall not accept the hazardous waste without written approval from the Director that the hazardous waste is consistent with those hazardous wastes that are specified in the permit.

H. Hazardous waste facility permit special conditions. The Agency may include special permit conditions to restrict the establishment, construction, operation, or closure of a hazardous waste facility whenever the Agency deems such special conditions necessary in order to perform its responsibilities and duties under its regulations and other relevant laws.

I. Exceptions.

1. A generator who establishes, constructs, operates, or closes an on-site hazardous waste resource recovery facility that is owned by the generator and is operated solely for the purpose of recycling hazardous waste produced by that generator shall not be required to obtain a Hazardous Waste Facility Permit for that facility.

2. The facility operator of a hazardous waste containerized storage facility with a capacity of less than 5,000 gallons (18,927 liters) that is not in the same location as any other types of hazardous waste facility shall not be required to obtain a Hazardous Waste Facility Permit for that facility.

3. The facility operator of a wastewater treatment works operated pursuant to a National Pollutant Discharge Elimination System Permit or State Disposal Permit shall not be required to obtain a Hazardous Waste Facility Permit for that facility.

HW 7 Contents of hazardous waste facility permit applications.

A. Applicability. This regulation establishes the information that must be submitted in an application for a Hazardous Waste Facility Permit.

B. Preliminary application.

1. All hazardous waste facilities. Any person who submits a preliminary application to the Agency for a Hazardous Waste Facility Permit, regardless of the kind of facility, shall provide the following information in the preliminary application:

a. All information required by Minn. Reg. MPCA 5.

b. An area plan having a scale and vertical contour intervals sufficient to show existing surrounding features to within one mile radius, and delineating the following:

(1) County, township, and municipal boundaries.

(2) A north arrow, town, range, and section number.

(3) Surface waters, floodplains, and wetlands.

(4) Boundaries of parks and wildlife refuges.

(5) Highways, roads, and rights of way for railroads, including a designation of the main access to the facility.

(6) Approximate daily utilization of each access route by vehicles transporting hazardous waste.

(7) Surface water drainage patterns and drainage divides with the direction of the drainage denoted by arrows.

(8) Land use patterns and zoning.

(9) Buildings within ¼ mile of the proposed facility and their apparent uses.

(10) Quarries and gravel pits (active and abandoned).

(11) Major rock outcroppings and fault zones.

(12) Sanitary landfills or dumps (active and abandoned).

(13) The location and surface elevations of all active and abandoned wells within ¼ mile of the facility.

(14) Any other applicable area features necessary to determine the suitability of the area for the hazardous waste facility.

c. A site plot plan of existing conditions at the location of the proposed facility, with the site plot plan having a scale and vertical contour interval acceptable to the Director, including all land within 1000 feet of the property lines of the proposed facility, and the following:

(1) County, township, and municipal boundaries.

(2) A north arrow, town, range, and section number.

(3) Zoning and land use patterns.

(4) Surface waters, floodplains, and wetlands.

(5) Highways, roads, and railroads (including rights of way of railroads), including a designation of those that will be utilized as main accesses to the facility.

(6) A conceptual layout of the facility.

(7) Existing and proposed drainage patterns of surface water runoff denoted by arrows.

(8) Sanitary and storm sewers, sewer connections, electric power lines, and underground gas lines serving the facility.

(9) The location and surface elevations of surrounding wells (active and abandoned), on-site soil borings, well installations, and piezometers, all of which shall be tied into a bench mark.

(10) All buildings and their uses.

(11) Existing ground cover vegetation.

(12) Rock outcroppings, sink holes and faults.

(13) The boundary lines and ownership of all property bordering the proposed site of the facility.

(14) Any other site features necessary to determine the suitability of the site for the hazardous waste facility.

2. Hazardous waste containerized storage facilities, hazardous waste transfer station facilities, and hazardous waste processing facilities. In addition to the information required by subparagraph 1 of this section, any person who submits a preliminary application for a Hazardous Waste Facility Permit for a hazardous waste containerized storage facility, a hazardous waste transfer station, or a hazardous waste processing facility shall submit the following additional information:

a. A report that summarizes the available information on the subsurface conditions at the proposed site for the facility and reviews dominant soil types, underlying bedrock, groundwater quality, and the location and depths of all wells within one thousand feet.

b. When required by the Director, a report that

KEY: Existing rules are printed in standard type face. Proposed additions to existing rules are printed in **boldface**, while proposed deletions from existing rules are printed within [single brackets]. Additions to proposed rules are **underlined and boldfaced**, while deletions from proposed rules are printed within [[double brackets]].

summarizes the subsurface field investigations conducted by the applicant to determine the feasibility of the proposed location.

c. An engineering report that conceptually assesses the construction of the facility and any existing construction proposed to be used at the facility.

d. A report that conceptually addresses the operation of the facility including when applicable:

(1) A general description of the waste types proposed to be brought to the facility describing the approximate chemical composition, the hazardous properties, and the estimated quantities that will be handled on a yearly basis.

(2) A discussion of the inventory control procedures to be utilized in managing each waste type at the facility.

(3) A description of any processing including, but not limited to, chemical precipitation, incineration, chemical fixation, blending, or repackaging that is proposed to occur at the facility.

(4) A delineation of the actual or proposed management of the hazardous waste that is brought to the facility and that is subsequently removed from the facility for management elsewhere.

(5) A description of the anticipated air emissions, wastewater effluents, hazardous wastes, and solid wastes that will be produced by the facility.

3. Hazardous waste noncontainerized storage facilities, hazardous waste land treatment facilities, and hazardous waste land disposal facilities. In addition to the information required by subparagraph 1 of this section, any person who submits a preliminary application for a Hazardous Waste Facility Permit for a hazardous waste noncontainerized storage facility, hazardous waste land treatment facility, or hazardous waste land disposal facility shall submit the following additional information:

a. A report on the subsurface conditions at the proposed facility based on a field investigation that includes a sufficient number of soil borings, groundwater monitoring wells, and piezometers to accurately investigate subsurface conditions. The location, placement and construction of the soil borings, monitoring wells, and piezometers shall be done in a manner that facilitates the preparation of plot plans and cross sections. The report shall include, unless otherwise specified by the Director:

(1) Logs of borings classified according to ASTM D 2487-69 and ASTM D 2488-69.

(2) A plot plan that delineates the surface of the underlying groundwater, the direction of groundwater flow, perched water tables, recharge and discharge areas, and the location of soil borings, groundwater monitoring wells and piezometers, and the dates of inspection and water levels recorded in establishing the groundwater information listed by each well and piezometer.

(3) The placement and construction of monitoring wells and piezometers.

(4) Cross sections prepared from the field investigation that illustrate soil profile, groundwater aquifers, vertical and horizontal direction of groundwater flow and other significant geological features, and, should the field investigation indicate the need for an investigation of the underlying bedrock, core samples or cuttings taken from borings and rock types adequately defined as to petrology and stratigraphy.

(5) A comparison of the findings of the field investigations with previous research and literature on the subsurface conditions at the site and an explanation of any discrepancies in the findings of the field investigation and previous research.

(6) An estimated water balance for the location of the proposed facility that considers precipitation, drainage, infiltration, exfiltration, percolation, evaporation and runoff.

(7) A section that addresses the porosity and permeability of major soil types that were encountered in the field investigation, including a description of the procedures used in the testing of the major soil types. The section shall discuss:

(a) The ability of the soil to attenuate the hazardous waste and the leachate thereof through ion exchange, absorption, adsorption, precipitation, and other such mechanisms.

(b) A review of the anticipated products from such mechanisms including both final and intermediate biochemical metabolites and chemical degradation products.

(c) An assessment of how effective the soil attenuation processes will be in providing treatment to the hazardous waste and leachate thereof.

(8) A section that addresses the seasonal fluctuation in groundwater levels, an approximation of the historic high groundwater levels expected based on field investigations, and influences on the groundwater levels by local wells, irrigation, or drainage ditches.

(9) A section on groundwater quality that delineates the natural quality, assesses the potential impact of the hazardous waste to be accepted at the facility and the leachate thereof on groundwater quality, and appraises whether this facility would preclude beneficial present and future uses of the groundwater.

b. An engineering report that conceptually addresses the design of the facility including:

(1) A description of the wastes to be managed at the facility, including the amount, general chemical composition, and properties of the waste.

(2) Any treatment processes that will be utilized to prepare the waste before land disposal, land treatment, or storage.

(3) A site plot plan that delineates the conceptual engineering plans for the facility.

(4) A section that describes and assesses as applicable:

(a) The preliminary specifications for the liners, the liners currently under consideration, and the individual liners' ability to meet those specifications.

(b) The preliminary specifications for the leachate collection system, the materials currently under consideration, and the ability of those materials to meet the specifications.

(c) The preliminary design criteria for any leachate treatment system being proposed.

(5) A conceptual discussion of the operation of the proposed facility.

c. A report that:

(1) Evaluates the expected effect of the vapors, gases and dusts from the wastes on the air quality at the actual site and in the immediate vicinity of the site.

(2) Appraises the expected subsurface migration of the vapors and gases from the wastes relative to conditions found in the subsurface investigations.

C. Final application.

1. All hazardous waste facilities. Any person who submits a final application to the Agency for a Hazardous Waste Facility Permit, regardless of the kind of facility, shall provide the following information:

a. Any information required to respond to the comments made by the Director on the preliminary application.

b. An engineering report that details the plans and specifications for the construction of the facility, which shall be referenced into the plot plans, including when applicable:

(1) A site plot plan that delineates the final engineering plans for the facility. If the facility involves progressive development of different parts of the area designated for the facility, the applicant shall submit a series of plot plans to illustrate the progressive development of the facility. All site plot plans shall be of sufficient detail, scale, and vertical contour interval to allow for actual construction from the plot plan. The site plot plan shall include:

(a) All information contained on the site plot plan submitted with the preliminary plans and specifications.

(b) A detailed layout of the facility as it is to be built, indicating buildings, fencing, utilities, storage areas, earthwork, and other applicable details.

(c) The location of any air quality, water quality or groundwater monitoring devices located or proposed to be located at the facility.

(d) Arrows delineating surface water drainage patterns after construction of the proposed facility, including the relationship of the drainage patterns to the runoff containment lagoons.

(2) Specifications for the construction of all storage areas and storage tanks, clearly delineating thickness of liners, liner material, grades, drains, sewer inlets, vehicle ramps, foundation construction, and storage tank construction.

(3) A section on the equipment that will be installed at the facility. The section shall include a discussion of underlying physical principles or chemical reactions, detailed drawings and specifications of all equipment, expected performance data, air emissions data, and the water quality of the wastewater discharge.

KEY: Existing rules are printed in standard type face. Proposed additions to existing rules are printed in **boldface**, while proposed deletions from existing rules are printed within [single brackets]. Additions to proposed rules are **underlined and boldfaced**, while deletions from proposed rules are printed within [[double brackets]].

(4) A section that delineates the design and specifications for the treatment of contaminated runoff or snow that would arise from the operation of the facility.

c. An operations manual that includes:

(1) A section that delineates procedures, methods, and maintenance that must be done at the facility on a daily or periodic basis to insure proper management of the waste at the facility.

(2) Inventory control procedures to be utilized at the facility to properly manage the waste in inventory, including:

(a) Locations for storage of each waste type, together with a clear delineation of which waste types are not compatible, the recommended maximum times of storage, and the methods for logging shipments into and out of inventory.

(b) Maintenance and inspection schedules for insuring that containers in storage are properly labeled and not leaking.

(3) A thorough description of the type and frequency of inspection or maintenance that shall be done on storage areas, dikes, storage tanks, liners, cover materials, leachate collection systems, any other construction and equipment at the proposed facility.

(4) A monitoring section that describes the procedures to be used and the parameters to be analyzed by the permittee to:

(a) Inventory and identify incoming hazardous waste.

(b) Conduct air and groundwater monitoring programs.

(c) Monitor the management of waste produced by the operation of the facility.

(5) A section on how to operate and manage holding basins for runoff or contaminated snow that arises from the operation of the facility.

(6) A description of the procedures that shall be employed by the facility personnel in responding to spills or other emergency situations that could arise during facility operation. Specific references shall be made to (a) the training or instruction that the facility personnel shall receive, (b) the on-site emergency and safety equipment, and (c) the arrangements for emergency services.

(7) A section outlining the specific management plan for all residuals and hazardous wastes that arise from the operation of the facility.

d. A closure manual describing the procedures and construction that will be used to close the facility, and the monitoring and maintenance required to be conducted at the facility after closure.

2. Hazardous waste noncontainerized storage facilities, hazardous waste land treatment facilities, and hazardous waste land disposal facilities. In addition to the information required by subparagraph 1. of this section, any person who submits a final application for a Hazardous Waste Facility Permit for a hazardous waste noncontainerized storage facility, hazardous waste land treatment facility, or a hazardous waste land disposal facility, shall submit the following additional information:

a. A report on the subsurface conditions at the proposed facility. The report shall review the results of continued monitoring of groundwater conditions and supplement the information developed in the preliminary application. The report shall review the subsurface facility construction, including the following:

(1) Cross sections that illustrate the design of the facility in relationship to soil profiles, bedrock profiles, groundwater contours, and other geological features and that delineate the proposed location of lysimeters and groundwater monitoring wells relative to vertical and horizontal groundwater flows.

(2) A section that describes the water balance of the facility and its impact on the existing water balance and quality in the site area, and that contains, when deemed necessary by the Director, a plot plan that delineates how the groundwater contours will be affected by development of the facility.

(3) A section that reviews the effect of contaminants should a a failure in the engineering design or construction occur. The section shall include an assessment of the ability of contaminants to pass through underlying soils, a description of the potential effect on the groundwater quality, and recommendations for remedial action should it be necessary.

b. A report that provides a detailed assessment of the specifications and design for liners, leachate collection systems, and leachate treatment systems.

c. A report on air and groundwater monitoring systems and other equipment that will be installed at the proposed facility and on the proposed monitoring procedures. The report shall include the location of

monitoring wells and air monitoring stations, plans and specifications for the construction of the monitoring wells in accordance with requirements of the Minnesota Department of Health, plans and specifications for the construction of air monitoring stations, the procedures for sampling, the frequency of sampling, the kind of analyses to be performed, the provisions that will be made for monitoring after the facility is closed (unless otherwise specified by the Director after completion of the review of the preliminary report), and a description of the financial arrangements made to insure monitoring at the site as long as the waste is present there.

d. A closure report and plot plan that delineates the finished construction of the facility after closure and discusses long term maintenance and monitoring. The report and plan shall include the following:

(1) A site plot plan of the proposed final conditions at the facility. The plot plan shall have a scale and vertical contour interval acceptable to the Director and shall include:

(a) Original contours.

(b) Proposed final contours.

(c) Original surface water drainage patterns.

(d) Proposed final surface water drainage patterns.

(e) Layout of the leachate collection system.

(f) Layout of gas vents, gas migration barriers, and other such gas controls.

(g) Access roads.

(h) Finished landscaping.

(2) Cross sections that delineate each finished cell and cross sections that delineate the disposal or storage of each major waste type. The cross sections shall depict liners, leachate collection systems, the waste, cover materials, and other applicable details.

(3) A section that provides specifications for any construction or materials to be used in closing the facility.

(4) A section that discusses long term maintenance of liners, cover material, leachate collection systems, gas controls, and other applicable construction.

(5) A section that discusses operation of the leachate collection and treatment systems, gas controls, and runoff retention basins after closure.

(6) A section that discusses the continued sampling and analysis of monitoring wells, leachate collection systems, emitted gases, and surface water runoff.

(7) A section that discusses the techniques for removal of chemical wastes from cells in case the waste poses a threat or has created a threat to air, land, or water resources of the state, or to public health and safety, regardless of the cause of that threat.

(8) A financial plan that proposes how to provide funds for long term maintenance, operation, and monitoring of the facility and funds for remedial actions in the case that any of the wastes poses a threat or has created a threat to air, land, and water resources of the state, or to public health or safety.

D. Waiver. Any person who submits a preliminary application or final application to the Agency for a Hazardous Waste Facility Permit shall not be required to submit that information which the Director informs the person in writing is not pertinent to a particular application.

HW 8 Hazardous waste shipping papers.

A. Applicability. This regulation establishes requirements for the preparation of hazardous waste shipping papers by generators. This regulation also establishes requirements for the handling, signing and submission of hazardous waste shipping papers by generators, transporters, and facility operators.

B. Hazardous waste shipping papers required. No person shall release, transport, or accept a hazardous waste that is not accompanied by hazardous waste shipping papers.

C. Preparation of hazardous waste shipping papers.

1. Each generator shall prepare hazardous waste shipping papers for each shipment of hazardous waste.

2. The generator shall prepare an original and a

KEY: Existing rules are printed in standard type face. Proposed additions to existing rules are printed in **boldface**, while proposed deletions from existing rules are printed within [single brackets]. Additions to proposed rules are **underlined and boldfaced**, while deletions from proposed rules are printed within [[double brackets]].

sufficient number of copies of the hazardous waste shipping papers so that all persons who are going to participate in the management of the hazardous waste will be able to comply with the provisions of this regulation.

3. The hazardous waste shipping papers shall include the following information.

a. The names and addresses of the generator, transporters, and hazardous waste facilities to which the hazardous waste is to be transported.

b. An identifying shipment number.

c. The amount of hazardous waste being transported.

d. The approximate chemical composition of the waste.

e. The hazardous properties of the waste.

f. The dates during which the hazardous waste was produced.

g. The names and telephone numbers of persons and agencies to notify or consult with in case of spillage during handling or transportation.

h. The transporters' Agency identification numbers.

i. The names of other generators whose hazardous wastes are to be comingled with the generator's shipment of hazardous waste.

j. Procedures for handling spills, fires, and other emergencies.

k. The signature of the generator.

l. Any other information the generator deems important.

4. The hazardous waste shipping papers shall include a place for the signature of each transporter and facility operator who accepts possession of the shipment of hazardous waste and a place for the signature of the facility operator who is responsible for ultimate disposition of the hazardous waste.

D. Preparation of supplemental cover sheet. Each transporter or facility operator who comingles or consolidates more than one shipment of hazardous waste shall prepare a supplemental cover sheet. The supplemental cover sheet shall provide procedures for handling spills, fires, and other emergencies and shall accompany the hazardous waste shipping papers for each individual shipment of hazardous waste until ultimate disposition.

E. Signing and submission of hazardous waste shipping papers.

1. Each generator, transporter, and facility operator who relinquishes possession of a shipment of hazardous waste shall obtain the signature of the transporter or facility operator who accepts the shipment of hazardous waste on the original and each copy of the hazardous waste shipping papers. The generator shall retain one copy of the hazardous waste shipping papers. The transporter or facility operator shall obtain two copies of the hazardous waste shipping papers and, within two days after relinquishing possession, return one copy to the generator.

2. Each transporter or facility operator who accepts a shipment of hazardous waste shall sign the hazardous waste shipping papers.

3. The facility operator of a hazardous waste processing facility, a hazardous waste land disposal facility, or a hazardous waste land treatment facility shall sign the hazardous waste shipping papers a second time upon ultimate disposition of the hazardous waste and return the original to the generator within two days of ultimate disposition.

4. The generator of a shipment of hazardous waste shall maintain the original of the hazardous waste shipping papers for a period of five years after it is returned. Each transporter and facility operator who accepted the shipment of hazardous waste shall maintain a copy of the hazardous waste shipping papers for a period of five years after accepting the hazardous waste.

5. Upon the request of the Director any generator, transporter, or facility operator shall submit the original or a copy of hazardous waste shipping papers to the Agency at the time and in the manner specified by the Director. If the request requires the generator to inform all transporters and facility operators managing the hazardous waste of the request, the generator shall so inform the transporters and facility operators, and the generator, transporters and facility operators shall comply with the Director's request.

F. Exemptions.

1. A generator who manages the hazardous waste at an on-site hazardous waste processing facility, hazardous waste land disposal facility, or hazardous waste land treatment facility is not required to comply with the

requirements of this regulation with respect to those wastes on-site.

2. Generators and transporters of waste crankcase oil are not required to have hazardous waste shipping papers accompany the waste crankcase oil that they generate or transport unless the waste crankcase oil has mixed with other wastes.

3. Persons who release or accept hazardous waste that is discharged directly to a sewer system operated pursuant to an NPDES permit or State Disposal System Permit are exempted from the requirements of this regulation with respect to such a discharge.

HW 9 County regulation of hazardous waste management.

A. Applicability. This regulation establishes procedures for Agency review of county actions pertaining to hazardous waste management and the procedures for submission of documents in the event the county ordinance is approved by the Agency.

B. Review of county ordinances.

1. A county that seeks Agency approval of a hazardous waste ordinance shall submit a copy of the ordinance to the Agency. The Agency shall advise the county in writing whether the ordinance is approved.

2. If a metropolitan county submits notification of county hazardous waste regulations or hazardous waste ordinance to the Agency pursuant to Minn. Stat. § 473.811, subd. 5, the procedure established inuubparagraph 1 of paragraph D shall be followed. Any action by the Agency pursuant to such notification shall not be deemed to be Agency approval of such regulations or ordinance, unless such approval is explicit and is in writing.

C. Certifications, disclosures and shipping papers.

1. A person producing a waste shall not be required to submit a certification to the Agency, unless specifically requested in writing by the Director to do so, if the following is the case:

a. The person evaluates the waste, determines that it is not a hazardous waste, and submits a certification to the county in accordance with the requirements of the county ordinance; and

b. The certification contains the same information required by these regulations; and

c. The county ordinance has been approved in writing by the Agency.

2. A generator shall not be required to submit the disclosure to the Agency, unless specifically requested in writing by the Director to do so, if the following is the case:

a. The generator submits a disclosure to the county in accordance with the requirements of the county ordinance; and

b. The disclosure contains the same information required by these regulations; and

c. The county ordinance has been approved in writing by the Agency.

3. Each generator shall submit the required copies of the hazardous waste shipping papers to the county as required by the county ordinance for each shipment of hazardous waste that is transported.

4. All persons shall comply with all other requirements of these regulations.

D. Duties of counties.

1. A county shall submit to the Agency written notification of all actions concerning hazardous waste licenses and permits by the county during the previous month. The notification shall be submitted to the Agency on the fifteenth day of each month. Upon the request of the Director, the county shall provide the Agency with a copy of all the information that it considered in reaching its decision. The Agency shall place the matter on the agenda of the next regularly scheduled meeting of the Agency, which will be on the fourth Tuesday of the month. The Agency may amend, modify, suspend, or reverse the action of the county. The action of the Agency in reviewing the county decision to grant the license or permit shall not affect the Agency's consideration of a Hazardous Waste Facility Permit for the same facility under these regulations.

2. A county shall submit to the Director, upon his request, a copy of any disclosure or certification that has been submitted to the county.

KEY: Existing rules are printed in standard type face. Proposed additions to existing rules are printed in **boldface**, while proposed deletions from existing rules are printed within [single brackets]. Additions to proposed rules are **underlined and boldfaced**, while deletions from proposed rules are printed within [[double brackets]].

3. A county shall submit to the Agency a yearly summary of hazardous waste management in the county. The yearly summary shall be submitted by March 1 for the year that ended on the previous December 31. The summary shall contain:

a. The name and license number of each generator in the county.

b. The total number of hazardous waste shipments.

c. The total quantities shipped for each type of hazardous waste.

d. The registration numbers and names of the transporters used.

e. Facilities at which the waste was stored, processed, or disposed.

f. Number of spills and accidents.

g. Any other information requested by the Director.

HW 10 Spillages and leakages of hazardous waste.

A. Duty to report and recover. Any person who owns, has possession of, or otherwise has control of a hazardous waste that spills, leaks, or otherwise escapes from a container, vehicle tank, storage tank, portable tank, or other containment system, including its associated piping, shall immediately notify the Agency. The person shall use, when applicable, the Agency's 24 hour telephone notification service. The person shall recover the hazardous waste as rapidly and as thoroughly as possible and shall immediately take such other action as may be reasonably possible to protect human life and health and minimize or abate pollution of the water, air or land resources of the state caused thereby.

B. Open burning. No person shall undertake open burning of such hazardous waste unless the open burning has been approved in writing by the Director. The Director may approve open burning of the following substances:

1. Distilled petroleum products.

2. Crude oil, if it is not possible to recover the crude oil. The Director shall consider the location of such hazardous waste and the wind conditions and may approve such open burning only if there will be no adverse effect on residential areas or on traffic conditions.

Appendix A

AMERICAN NATIONAL STANDARD ANSI/ASTM D 3243 - 76

Standard Test Method for FLASH POINT OF AVIATION TURBINE FUELS BY SETAFLASH CLOSED TESTER[1]

This Standard is issued under the fixed designation D 3243; the number immediately following the designation indicates the year of original adoption or, in the case of revision, the year of last revision. A number in parentheses indicates the year of last reapproval.

1. Scope

1.1 This method describes a procedure for the determination of the flash point, by a Setaflash Tester, of aviation turbine fuels. The procedure may be used to determine whether a fuel will or will not flash at a specified temperature (go-no-go flash) or the actual flash point temperature.

1.2 Results by using the Setaflash Tester have been shown to be comparable in magnitude to those obtained by using the Tag Closed-Cup procedure as described in Method D 56.

1.3 *This standard should be used solely to measure and describe the properties of materials, products, or systems in response to heat and flame under controlled laboratory conditions and should not be considered or used for the description, appraisal, or regulation of the fire hazard of materials, products, or systems under actual fire conditions.*

2. Applicable Documents

2.1 *ASTM Standards:*

D 56 Test for Flash Point by Tag Closed Tester[2]

E 1 Specification for ASTM Thermometers[3]

3. Summary of Method

3.1 By means of a syringe, 2 ml of sample is introduced through a leakproof entry port into the tightly closed Setaflash Tester that has been brought to within about 5°F (3°C) below the expected flashpoint. After 1 min, to allow the sample to come to the same temperature as the aluminum alloy body of the tester, in which the thermometer is inserted, the temperature of the apparatus is raised to the "expected" flash point temperature. A test flame is applied inside the cup and note is taken as to whether the test sample flashes or not.

3.2 As a go-no-go test, the "expected" flash point temperature is a specification or other operating target value. For a finite flash measurement, the temperature is moved through the anticipated temperature range, the test flame being applied at 2°F (1.0°C) intervals until a flash is observed; a second trial is made using the first value as the "expected" flash point temperature, this time making tests at 1°F (0.5°C) intervals.

4. Apparatus

4.1 *Flash cup and operating mechanism*, illustrated in Fig. 1 and dimensioned in detail in Annex A1. Fasten electrical heaters to the cup in such a way so as to provide for efficient transfer of heat. Provide a variable heater control device with a scaled dial and a visible signal indicating when energy is or is not being applied. Energy may be supplied from a 115 or 230-V a-c main service (for stationary use) or by a 12-V d-c battery service (for field use).

4.2 *Test Flame and Pilot Flame*—Regulatable test flame, for dipping into the test cup to try for flash, and a pilot flame to maintain the test flame, are required. These flames may be fueled by piped gas service (fixed location) or by a self-contained tank (4.2.1) of LP gas lighter fluid (for portability). Provide a gage ring, 1/8 in. (4 mm) in diameter, mounted on a post near the test flame against which the size of the flame may be judged.

4.2.1 Never recharge the gas tank with the pilot or test flames alight, nor in the vicinity of other naked flames.

---

[1] This method is under the jurisdiction of ASTM Committee D-2 on Petroleum Products and Lubricants.

Current edition approved Aug. 27, 1976. Published November 1976. Originally published as D 3243 - 73 T. Last previous edition D 3243 - 73 T.

[2] *Annual Book of ASTM Standards*, Part 23.

[3] *Annual Book of ASTM Standards*, Parts 25 and 44.

for a flash at the cup opening.

7.3.5 The sample is deemed to have flashed only if a comparatively large blue flame appears and propagates itself over the surface of the sample. Occasionally, particularly near the temperature of the actual flash point, the application of the test flame will cause a halo, which should be ignored.

7.3.6 Record the test result as flash (or no flash) at the temperature and the barometric pressure. Make a barometric pressure correction, if necessary (9.1).

7.4 *Test Procedure for Actual Flash Point:*

7.4.1 When a finite flash point is to be determined, make a trial test beginning at about 10°F (6°C) below the expected value. If no flash is observed, continue heating and test for flash at each 2°F (1°C); the rate of temperature rise may be as rapid as can be conveniently followed when watching both the thermometer and the test flame. When a flash is observed, use it as the expected flash point value in setting the test cup temperature for the finite flash point.

7.4.2 After cleaning the test cup, adjust the temperature so that it is stable at about 5°F (3°C) below the expected flash point (7.3); charge the syringe with a fresh test sample and transfer the sample to the fitting orifice (Fig. 1) taking care not to lose any sample. Then discharge the sample into the test cup by depressing the syringe plunger to its lowest position.

NOTE 3—The test cup temperature is stable when the signal light slowly cycles ON/OFF.

7.4.3 Move the 1-min timing device by rotating its knob clockwise to the required setting. In the meantime, open the gas control valve, and light the pilot and test flames. Adjust the test flame size with the pinch valve so as to match the size of the $\frac{1}{8}$ in. (4 mm) diameter of the gage.

7.4.4 After 1 min has elapsed, turn the heater control toward FULL ON. Apply the test flame at each 1°F (0.5°C) interval by slowly and uniformly opening the slide fully and closing completely over a period of approximately $2\frac{1}{2}$ s. Watch for a flash at each application of the test flame.

7.4.5 When the flash point (7.3.5) is observed, record the flash point temperature and barometric pressure. If the barometric pressure differs from 760 mm (101.3 kPa), make necessary corrections according to 9.1.

7.4.6 Turn off pilot and test flames and clean the testing apparatus.

7.4.7 Never make a repeat flash point determination using the same sample; always use a fresh portion of sample for each new test.

8. Clean-Up of Apparatus

8.1 To prepare for the next test, unlock the lid assembly of the tester and raise to the hinge stop. Soak up sample with an absorbent paper tissue. Clean the underside of the lid and the filling orifice; a pipe cleaner may be of assistance in cleaning the latter.

8.1.1 Any further cleaning necessary may be carried out by complete removal of the lid and shutter assembly. Disconnect the silicone rubber gas tube and slide the lid assembly to the right to remove. If warm, handle gingerly.

8.2 After the cup has been cleaned, its temperature may be rapidly reduced to some stand-by value by turning the temperature control dial to an appropriate point.

8.2.1 It is convenient to hold the test cup at some stand-by temperature (depending on planned usage) to conserve time in bringing the cup within the test temperature range. The cup temperature may be quickly lowered by placing an ice cube in the cup, sopping up the water before it spills over the edge. A neater operation is possible by inserting the aluminum cooling block (4.6) which has been kept in an ice-water bath.

8.3 The syringe is easily cleaned by filling with acetone twice, discharging each time, and allowing to air dry with the plunger removed. Replace the plunger, and pump several times to replace any acetone vapor with air.

9. Correction for Barometric Pressure

9.1 When the barometric pressure differs from 760 mm Hg (101.3 kPa), calculate the flash temperature by means of the following equation:

$$\text{Calculated flash point} = T_F + 0.06\,(760 - P)$$
$$= T_C + 0.03\,(760 - P)$$

where:

T_F, T_C = observed flash point, °F or °C, and
P = barometric pressure, mm Hg

10. Precision

10.1 The following criteria should be used

4.3 *1-min Audible Signal*, a desirable accessory.

4.4 *Thermometer*, conforming to specifications given in Annex A2; test to determine that the scale error does not exceed 0.5°F (1.25°C). The use of a magnifying lens significantly assists in making temperature observations.

4.5 *Syringe*, a 2 ± 0.05-ml capacity at 77°F (25°C), is needed for selecting a uniform size sample. Check the capacity by discharging water into a beaker and weighing. Adjust plunger stop if necessary.

NOTE 1—A unit[4] meeting all of the requirements described above is shown in Fig. 2.

4.6 *Aluminum Alloy Cooling Block (with knob handle)*, that fits snugly within the test cup and is about 2½ times the volume of the cup, is a useful accessory for rapid cooling of the sample cup between tests.

5. Sample

5.1 The size of sample required for each test is 2 ml. Obtain at least a 25-ml sample at the bulk test site and store in a tight screw cap clean glass container.

5.2 Erroneously high flash points may be obtained if precautions are not taken to avoid the loss of volatile material. Do not open sample containers unnecessarily and do not transfer sample unless its temperature is at least 20°F (11°C) below the expected flash point. Discard samples in leaky containers.

6. Preparation of Apparatus

6.1 After thermometer removal or replacement, fix in place in its pocket (Fig. 1) with a good heat transfer paste.

6.2 Before initial use, determine the relationship between the temperature control dial and thermometer readings at intervals not exceeding 10°F (6°C) throughout the scale range of the heater. This calibration is useful in making the desired settings to establish a desired test temperature during a test.

6.3 As nearly as possible, place the tester in a position where it is not exposed to disturbing drafts. Provide a shield if necessary.

6.4 Read the manufacturers operating and maintenance instructions on the care and servicing of the tester, and for specific suggestions on the operation of its various controls.

7. Procedure

7.1 Inspect the inside of the test cup, lid and shutter mechanism for cleanliness and freedom from contamination. Use an absorbent paper tissue to wipe clean, if necessary. Put cover in place and lock securely.

7.2 To use the tester, switch the instrument on and turn the heater dial to a position corresponding to the desired test temperature.

NOTE 2—A calibration curve of Temperature Control Dial setting *versus* Sample Well Temperature is furnished with each instrument. If such a calibration is not available, one should be prepared from observations of test cup temperature for each dial setting as this will be useful in making desired temperature settings.

7.3 *Procedure for Go-No-Go Flash Point:*

7.3.1 Switch the instrument ON and turn the heater dial fully clockwise (FULL ON) causing the heater signal light to glow. When the thermometer reaches a temperature of about 5°F (3°C) below the expected or target flash point temperature (7.3.1.1) reduce the heat input to the test cup by turning the heater control dial, counterclockwise to the point at which the signal light is just extinguished.

7.3.1.1 When the tester is used in the go-no-go configuration, the specification or target value is the expected flash point.

7.3.1.2 When the correct temperature can be dialed on the temperature controller (6.2), the elapsed time to reach it may be greater than when turned to FULL ON, but less attention will be required in the intervening period.

7.3.2 When the test temperature is reached and the signal light is just extinguished, charge the syringe with a sample of the fuel to be tested and transfer the charge to the filler orifice. Discharge the test sample into the test cup by fully depressing the plunger of the syringe and then removing the syringe.

7.3.3 Move the 1-min timing device by rotating the knob clockwise to its stop. Open the gas control valve and light the test and pilot control flames. Adjust the pilot flame with the pinch valve to conform to the size of the 5/32-in. (4-mm) gage.

7.3.4 After 1 min has elapsed, apply the test flame by slowly and uniformly opening the slide valve and then closing it completely over a period of approximately 2½ s. Watch closely

[4] A Setaflash Low Temperature Tester, Model SFLA 1374, as shown in Fig. 2 is manufactured by Stanhope-Seta, Ltd., Egham, Surrey, England, and available in the U.S. from Erdco Engineering Corp., 136 Official Rd., Addison, Ill., 60101.

for judging the acceptability of results (95% confidence):

10.1.1 *Repeatability*[5]—Duplicate results by the same operator should be considered suspect if they differ by more than the following amounts:

Range	Repeatability
70 to 200°F (21 to 94°C)	2°F (1.1°C)

10.1.2 *Reproducibility*[5]—The results submitted by each of two laboratories should not be considered suspect unless they differ by more than the following amounts:

Range	Reproducibility
70 to 200°F (21 to 94°C)	7°F (3.9°C)

[5] The results of the co- ve test program, from which these values have been derived, are filed at ASTM Headquarters as Research Report No. RR-1008; D-2.

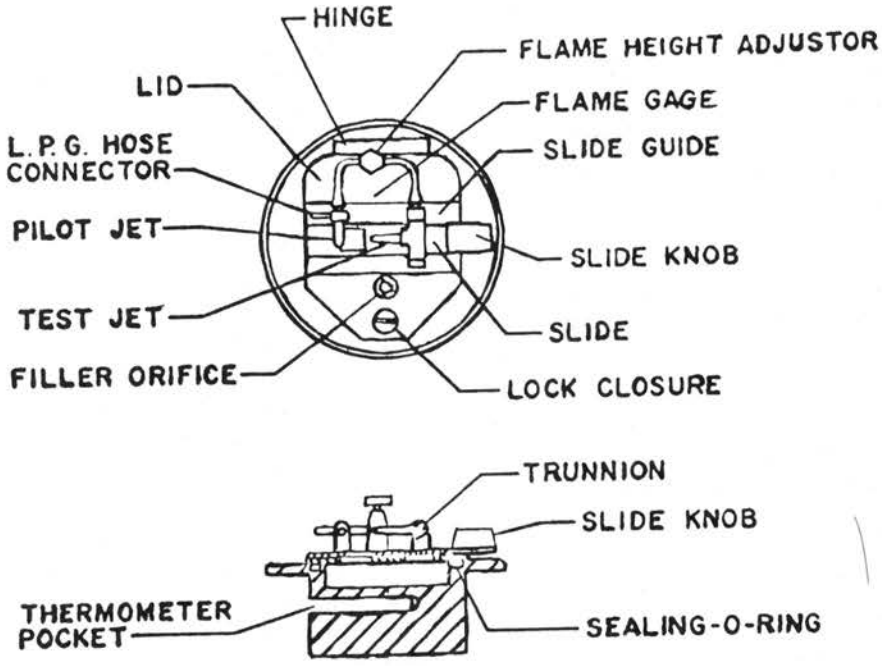

FIG. 1 Setaflash Cup Unit.

Appendix B

Designation: D 56 – 70 (Reapproved 1975)

American National Standard Z11.24-1971
Approved Aug. 17, 1971
By American National Standards Institute
Method 1101—Federal Test
Method Standard No. 791b
Replaces Method 4291 of Federal Test
Method Standard No. 141A

AMERICAN SOCIETY FOR TESTING AND MATERIALS
1916 Race St., Philadelphia, Pa., 19103

Reprinted from the Annual Book of ASTM Standards, Copyright ASTM
If not listed in the current combined Index, will appear in the next edition.

Standard Method of Test for
FLASH POINT BY TAG CLOSED TESTER[1]

This Standard is issued under the fixed designation D 56; the number immediately following the designation indicates the year of original adoption or, in the case of revision, the year of last revision. A number in parentheses indicates the year of last reapproval.

1. Scope

1.1 This method covers the determination of the flash point, by Tag closed tester, of liquids with a viscosity of below 45 SUS at 100 F (37.8 C) and a flash point below 200 F (93 C) except cut-back asphalts and those liquids which tend to form a surface film under test conditions.

NOTE 1—For the closed cup flash point of liquids with a viscosity of 45 SUS or more at 100 F (37.8 C) or a flash point of 200 F or higher, and those liquids which tend to form a surface film under test conditions use ASTM Method D 93, Test for Flash Point by Pensky-Martens Closed Tester.[2] For cut-back asphalts refer to ASTM Method D 1310, Test for Flash Point of Liquids by Tag Open-Cup Apparatus.[2]

NOTE 2—The U. S. Department of Transportation (OHM)[3] and U. S. Department of Labor (OSHA) have established that liquids with a flash point under 100 F (37.8 C) are flammable as determined by this method for those liquids which have a viscosity less than 45 SUS at 100 F (37.8 C) or do not contain suspended solids or do not have a tendency to form a surface film while under test. Other classification flash points have been established by these Departments for liquids using this test.

Liquids having viscosities more than 45 SUS at 100 F (37.8 C) and contain suspended solids or have a tendency to form a surface film while under test are regulated in accordance with Method D 93.

Coast Guard and Consumer Product Safety Commission Regulations are required by law to define flammable liquids as those having a flash point under 80 F (26.7 C) by an Open Cup Method (Method D 1310).

1.2 *This standard should be used solely to measure and describe the properties of materials, products, or systems in response to heat and flame under controlled laboratory conditions and should not be considered or used for the description, appraisal, or regulation of the fire hazard of materials, products, or systems under actual fire conditions.*

2. Summary of Method

2.1 The sample is placed in the cup of the tester and, with the lid closed, heated at a specified constant rate. A small flame of specified size is directed into the cup at regular intervals. The flash point is taken as the lowest temperature at which application of the test flame causes the vapor above the sample to ignite.

3. Apparatus

3.1 *Tag Closed Tester*—The apparatus is shown in Fig. 1 and described in detail in Appendix A1: Refer to Appendix A2 for directions for checking the condition and operation of the tester.

3.2 *Shield*—A shield 18 in. (460 mm) square and 24 in. (610 mm) high, open in front, is recommended.

3.3 *Thermometers*—For the test cup thermometer, use one as prescribed in Table 1. For the bath thermometer, any convenient type which has an adequately open scale covering the required range may be used; it is often convenient to use the same type of thermometer as used in the test cup.

---

[1] This method is under the joint jurisdiction of ASTM Committee D-1 on Paint, Varnish, Lacquer, and Related Products, and Committee D-2 on Petroleum Products and Lubricants.

Current edition effective Sept. 11, 1970. Originally issued 1918. Replaces D 56 – 64.

[2] *Annual Book of ASTM Standards*, Part 29.

[3] For information on U.S. Department of Transportation's regulations, see Codes of U.S. Regulations 49 CFR Chapter I and for information on U.S. Department of Labor's regulations see Code of U.S. Regulations 29 CFR Chapter XVII. Each of these items are revised annually and may be procured from the Superintendent of Documents, Government Printing Office, Washington, D.C. 20402.

NOTE 3—Whenever thermometers complying with ASTM requirements are not available, thermometers complying with the requirements for The Institute of Petroleum thermometer IP 15F PM-Low may be used.

NOTE 4—There are automatic flash point testers available and in use which may be advantageous in the saving of testing time, permit the use of smaller samples, and other factors which may merit their use. If automatic testers are used, the user must be sure that all of the manufacturer's instructions for calibrating, adjusting, and operating the instrument are followed. In any cases of dispute, the flash point as determined manually shall be considered the referee test.

4. Sample

4.1 Erroneously high flash points may be obtained if precautions are not taken to avoid the loss of volatile material. Containers shall not be opened unnecessarily and transfers shall not be made unless the sample temperature is at least 20 F (11 C) below the expected flash point. Samples in leaky containers shall be discarded.

5. Preparation of Apparatus

5.1 Support the tester on a level steady table. Unless tests are made in a draft-free room or compartment, surround the tester on three sides by the shield for protection from drafts. Tests made in a laboratory draft hood or near ventilators are not to be relied upon.

5.2 Gas is recommended for the test flame. If gas is not available, insert a wick of cotton in the burner tip, place small quantity of cotton waste in the chamber to which the burner tip is attached, and fill the chamber with signal, sperm, or lard oil.

6. Procedure

6.1 For flash points below 55 F (13 C) or above 140 F (60 C), use as bath liquid a 1 + 1 mixture of water and ethylene glycol. For flash points between 55 F (13 C) and 140 F (60 C), either water or water-glycol mixture may be used as bath liquid (Note 4). The temperature of the liquid in the bath shall be at least 20 F (11 C) below the expected flash point at the time of introduction of the sample into the test cup. Do not cool the bath liquid by direct contact with carbon dioxide or "dry ice." Place the test cup in position in the bath.

NOTE 5—Due to possible difficulty in maintaining the prescribed rate of temperature rise and due to the formation of ice on the lid, results by this method for samples having flash points below 32 F (0 C) may be somewhat unreliable. Trouble due to ice formation on the slide may be minimized by carefully lubricating the slide shutter with high-vacuum silicone lubricant.

6.2 Using a graduate and taking care to avoid wetting the cup above the final liquid level, measure 50 ± 0.5 ml of the sample into the cup, both the sample and graduate being precooled, if necessary, so that the sample temperature at the time of measurement will be 80 ± 10 F (27 ± 5.6 C) or at least 20 F (11 C) below the expected flash point, whichever is lower. It is essential that the sample temperature be maintained at least 20 F (11 C) below the expected flash point during the transfers from the sample container to the graduate and from the graduate to the test cup. Destroy air bubbles on the surface of the sample. Wipe the inside of the cover with a clean cloth or absorbent tissue paper; then attach the lid, with the thermometer in place, to the bath collar.

6.3 Light the test flame, adjusting it to the size of the small bead on the cover. Operate the mechanism on the cover in such a manner as to introduce the test flame into the vapor space of the cup, and immediately bring it up again. The time consumed for the full operation shall be about 1 s, or the time required to pronounce distinctly the words "thousand and one." Avoid any jerkiness in the operation of depressing and raising the test flame.

6.4 *Flash Points Below 140 F (60 C)*—If the flash point of the sample is known to be below 140 F (60 C), apply and adjust the heat so that the temperature of the sample will rise at a rate of 2 F (1 C)/min ± 6 s. When the temperature of the sample in the test cup is 10 F (5.6 C) below its expected flash point, apply the test flame in the manner just described in 6.3, and repeat the application of the test flame after each 1 F (0.6 C) rise in temperature of the sample.

6.5 *Flash Points at or above 140 F (60 C)*—If the flash point of the sample is known to be 140 F or higher, apply and adjust the heat so that the temperature of the sample will rise at a rate of 5 F (3 C)/min ± 6 s. When the temperature of the sample in the test cup is 10 F (5.6 C) below its expected flash point, apply the test flame in the manner described in 6.3, and repeat the application of the test flame after each 2 F (1 C) rise in temperature of the sample, at each temperature reading

that is a multiple of 2 F (1 C).

6.6 When the test flame application causes a distinct flash in the interior of the cup, observe and record the temperature of the sample as the flash point. Do not confuse the true flash with the bluish halo which sometimes surrounds the test flame at applications immediately preceding the actual flash.

6.7 Discontinue the test and remove the source of heat. Lift the lid and wipe off the thermometer bulb. Remove the sample cup, empty, and wipe dry.

6.8 If, at any time between the first introduction of the test flame and the observation of the flash point, the rise in temperature of the sample is not within the specified rate or if the actual flash point differs from the expected flash point by an amount greater than 4 F (2 C), discard the result and repeat the test, adjusting the source of heat to secure the proper rate of temperature rise and/or using a modified "expected flash point," as required.

NOTE 6—Never make a repeat test on the same portion of sample once used; always take a fresh portion of sample for each test.

7. Correction for Barometric Pressure

7.1 Observe and record the barometric pressure at the time of the test. Make a correction on the following basis: for each 25 mm (1 in.) below 760 mm (29.92 in.) barometric reading, add 0.9 C (1.6 F) to the observed flash point; for each 25 mm (1 in.) above 760 mm (29.92 in.) barometric reading, subtract 0.9 C (1.6 F) from the observed flash point. After applying the correction, round the value obtained to the nearest whole number.

8. Precision

8.1 The following criteria should be used for judging the acceptability of results (95 percent probability).[4]

8.1.1 *Repeatability*—Duplicate results by the same operator should not be considered suspect unless they differ by more than the following amounts:

Flash Point	Repeatability
Below 140 F (60 C)	2 F (1.1 C)
140 F (60 C) to 199 F (93 C)	3 F (1.7 C)

8.1.2 *Reproducibility*—The results submitted by each of two laboratories should not be considered suspect unless the two results differ by more than the following amounts:

Flash Point	Reproducibility
Below 55 F (13 C)	6 F (3.3 C)
55 F (13 C) to 139 F (59 C)	4 F (2.2 C)
140 F (60 C) to 199 F (93 C)	6 F (3.3 C)

[4] Supporting data for this method have been filed at ASTM Headquarters as RR: D-2-1003.

[5] *Annual Book of ASTM Standards*, Part 25.

TABLE 1 Thermometers

For Tests	Below 40 F (4 C)	At 40 to 120 F (4 to 49 C)	Above 120 F (49 C)
Use ASTM Thermometer[a]	57F or 57C	9F or 9C 57F or 57C	9F or 9C

[a] Complete specifications for these thermometers are given in ASTM Specification E 1, for ASTM Thermometers.[5]

KEY: Existing rules are printed in standard type face. Proposed additions to existing rules are printed in **boldface**, while proposed deletions from existing rules are printed within [single brackets]. Additions to proposed rules are **underlined and boldfaced**, while deletions from proposed rules are printed within [[double brackets]].

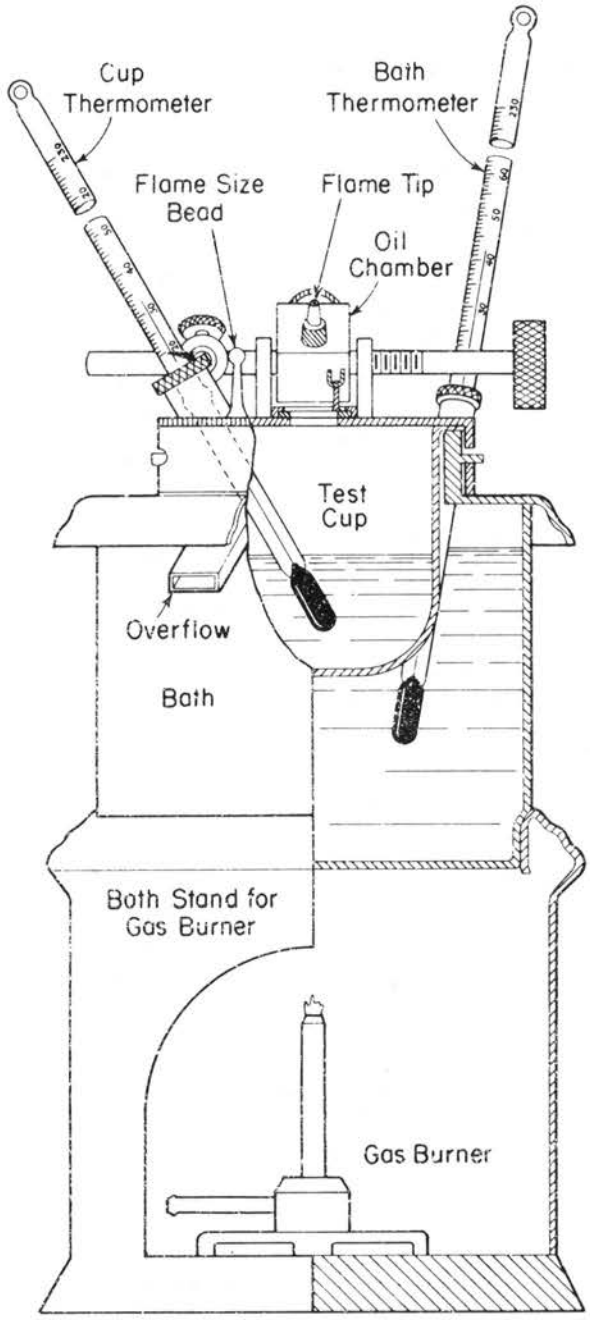

FIG. 1 Tag Closed Flash Tester.

APPENDIXES

A1. APPARATUS

A1.1 The Tag closed tester shall consist of the test cup, lid with test flame, and liquid bath conforming to the following requirements:

A1.1.1 *Test Cup*, of brass or other nonrusting metal of equivalent heat conductivity, conforming to dimensional requirements prescribed in Table A1. It shall weigh 68 ± 1 g.

A1.1.2 *Lid:*

A1.1.2.1 The lid comprises a circle of nonrusting metal with a rim projecting downward about 5/8 in. (15.9 mm), a slide shutter, a device which simultaneously opens the shutter and depresses the tip of the tube which carries fuel through to the test flame, and a slanting collar in which the cup-thermometer ferrule is inserted. Figure A1 gives a diagram of the upper surface of the lid, showing di-

mensions and positions of the three holes opened and closed by the shutter, and the size and position of the opening for the cup thermometer.

A1.1.2.2 The rim shall fit the collar of the liquid bath with a clearance not exceeding 0.002 in. (0.05 mm) and shall be slotted in such a manner as to press the lid firmly down on the top of the cup when the latter is in place in the bath. When this requirement is not met, the vertical position of the cup in the bath shall be suitably adjusted, as by placing a thin ring of metal under the flange of the cup.

A1.1.2.3 The shutter shall be of such size and shape that it covers the three openings in the lid when in the closed position and uncovers them completely when in the open position. The nozzle of the flame-exposure device shall conform to the dimensions given in Table A1. The device shall be designed and constructed so that opening the shutter depresses the tip to a point approximately 0.08 in. (2 mm) to the right of the horizontal center of the middle opening of the lid. (Refer to lower part of Fig. A2.) This will bring the test flame to the approximate center of the opening. The plane of the underside of the lid shall be between the top and bottom of the opening in the tip of the flame-exposure device when the latter is fully depressed.

A1.1.2.4 The collar for the cup-thermometer ferrule shall be set at an angle which permits placement of the thermometer with its bulb approximately in the horizontal center of the cup, at a depth prescribed in Table A1.

A1.1.3 *Liquid Bath*, conforming to the limiting or minimum dimensions shown in Fig. A2. It shall be of brass, copper, or other noncorroding metal of substantial construction. Sheet metal of about No. 20 B & S gage (0.812 mm) is satisfactory. It may, if desired, be lagged with heat-insulating material to facilitate control of temperature.

A1.1.4 *Heater*, of any type (electric, gas, alcohol, etc.) capable of controlling temperature as required in Section 6. An external electric heater, controlled by a variable voltage transformer, is recommended.

A1.1.5 *Bath Stand*—For electric heating, any type of stand may be used. For alcohol lamp or gas burner, a stand, as illustrated in Fig. 1, to protect the flame from air currents (unless tests can be made in a draft-free room) is required.

A2. CHECKING CONDITION AND OPERATION OF TAG CLOSED TESTERS

A2.1 Material

A2.1.1 *p-Xylene*,[6] conforming to the following requirements:

Specific gravity (60/60 F) (15.6/15.6 C), 0.860 min, 0.866 max.

Boiling range.....2 C max from start to dry point, when tested by ASTM Method D 850, Test for Distillation of Industrial Aromatic Hydrocarbons and Related Materials,[2] or Method D 1078, Test for Distillation Range of Volatile Organic Liquids.[2] The range shall include the boiling point of pure *p*-xylene, which is 138.35 C (281.03 F).

Freezing point .....11.23 C, min (95 percent molal purity) as determined by ASTM Method D 1015, Test for Freezing Points of High-Purity Hydrocarbons.[7]

A2.2 Procedure

A2.2.1 Determine the flash point of the *p*-xylene, following the directions in Sections 4 to 7. When the tester is operating properly, a value of 81 ± 1 F (27.2 ± 0.6 C) will be obtained.

A2.2.2 If the flash point obtained on *p*-xylene is not within the limits stated in A2.2.1, check the condition and operation of the apparatus to ensure conformity with the details listed in Appendix A1, especially with regard to tightness of the lid (A1.1.2.2), the action of the shutter and the position of the test flame (A1.1.2.3), and the angle and position of the thermometer (A1.1.2.4). After adjustment, if necessary, repeat the test, with special attention to procedural details prescribed in Section 6.

A3. MANUFACTURING STANDARDIZATION

A3.1 The cup thermometer, which conforms also to the specifications for the low-range thermometer used in the Pensky-Martens flash tester, Method D 93, is frequently supplied by the thermometer manufacturer with a metal ferrule intended to fit the collar on the lid of the flash tester. This ferrule is frequently supplemented by an adapter which is used in the larger-diameter collar of the Pensky-Martens apparatus. Differences in dimensions of these collars, which are immaterial in their effect on the results of tests, are a source of considerable unnecessary trouble to manufacturers and suppliers of instruments, as well as to users.

A3.2 Subcommittee 21 on Metalware Laboratory Apparatus, of ASTM Committee E-1 on Methods of Testing, has studied this problem and has established some dimensional requirements which are shown, suitably identified, in Figs. A1, A3, and A4. Conformity to these requirements is not mandatory but is desirable to users as well as suppliers of Tag closed testers.

---

[6] Available as Flash Point Check Fluid (*p*-xylene) from Special Products Div., Phillips Petroleum Co., Bartlesville, Okla.

[7] *Annual Book of ASTM Standards*, Part 23.

TABLE A1 Dimensional Requirements

Depth of bath liquid surface below top of test cup	1.094 ± 0.016 (27.8 ± 0.4 mm)
Depth of sample surface below top of test cup	1.156 + 0.031 in. (29.4 ± 0.8 mm)
Depth of bottom of bulb of test thermometer below top of cup when in place	1.77 ± 0.03 in. (45.0 ± 0.8 mm)
Inside diameter of test cup at top	2.125 ± 0.005 in. (54.0 ± 0.1 mm)
Diameter of bead on top of cover	0.156 ± 0.031 in. (4.0 ± 0.8 mm)
Diameter of opening in tip of test flame nozzle	0.049 ± 0.010 in. (1.2 ± 0.3 mm)
Outside diameter of tip of test flame nozzle	0.079 in. max (2.0 mm max)

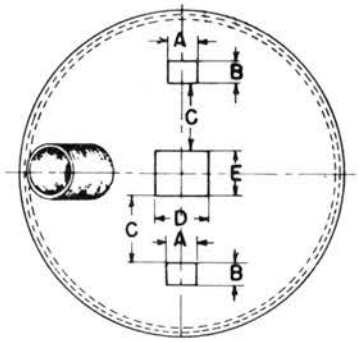

A – 0.281"
B – 0.188"
C – 0.594"
D – 0.469"
E – 0.406"

Note:

All dimensions ±0.005" unless otherwise shown.

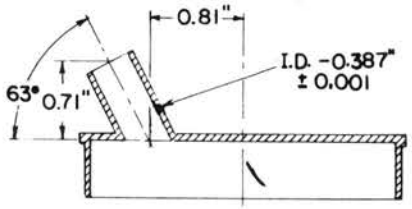

TOP OF LID SHOWING POSITION AND DIMENSIONS OF OPENINGS

Metric Equivalents

in.	mm	in.	mm
0.001	0.03	0.406	10.32
0.005	0.13	0.469	11.92
0.188	4.78	0.594	15.10
0.281	7.15	0.71	18.0
0.387	9.84	0.81	20.6

NOTE—Dimensions relating to the size and position of the thermometer collar are recommended but not mandatory.

FIG. A1 Top of Lid Showing Position and Dimensions of Openings

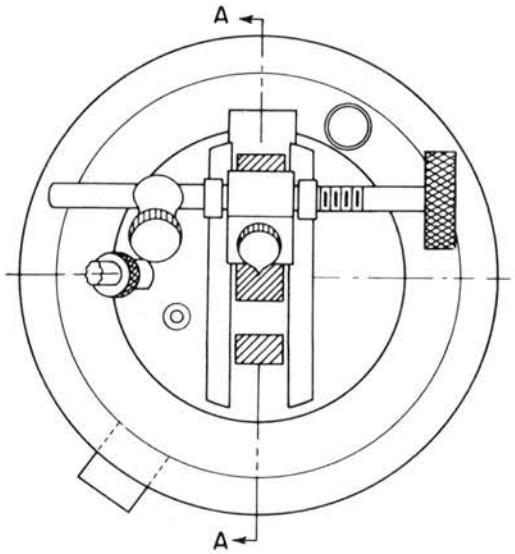

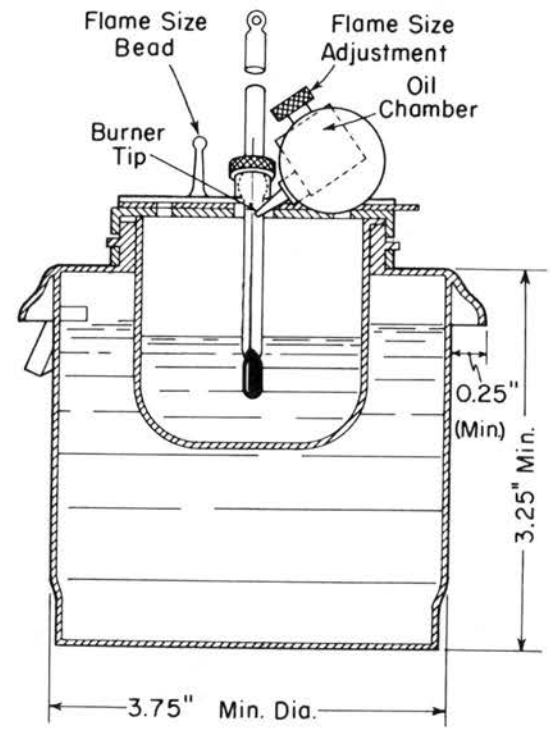

Metric Equivalents

in.	0.25	3.25	3.75
mm	6.4	82.6	95.3

FIG. A2 Section of Liquid Bath and Cup. Metric Equivalents

Appendix C

Designation: D 3278 – 73

AMERICAN SOCIETY FOR TESTING AND MATERIALS

1916 Race St., Philadelphia, Pa., 19103

Reprinted from the Annual Book of ASTM Standards, Copyright ASTM

Standard Methods of Test for FLASH POINT OF LIQUIDS BY SETAFLASH CLOSED TESTER[1]

This Standard is issued under the fixed designation D 3278; the number immediately following the designation indicates the year of original adoption or, in the case of revision, the year of last revision. A number in parentheses indicates the year of last reapproval.

1. Scope

1.1 This method covers the determination of the flash point, by Setaflash® Closed Tester, of paints, enamels, lacquers, varnishes, and related products and their components having flash points, between 32 and 230°F (0 to 110°C) having a viscosity lower than 150 stokes at 77°F (25°C).[2]

NOTE 1—Tests at higher or lower temperatures are possible.

1.2 The procedure may be used to determine whether a material will or will not flash at a specified temperature or to determine the finite temperature at which a material will flash.

1.3 The results from this method are comparable to those obtained by the Tag Closed Tester procedure described in Method D 563 and the Pensky-Martens Tester method described in Method D 93.

2. Applicable Documents

2.1 *ASTM Standards:*

D 56 Test for Flash Point by Tag Closed Tester[2]

D 93 Test for Flash Point by Pensky-Martens Closed Tester[2]

D 850 Test for Distillation of Industrial Aromatic Hydrocarbons and Related Materials[2]

D 1015 Test for Freezing Points of High-Purity Hydrocarbons[3]

D 1078 Test for Distillation Range of Volatile Organic Liquids[2]

3. Summary of Method

3.1 By means of a syringe, 2 ml of sample is introduced through a leakproof entry port into the tightly closed Setaflash Tester or directly into the cup that has been brought to within 5°F (3°C) below the expected flash point. As a flash/no flash test, the *expected* flash point temperature may be a specification or other operating requirements. The temperature of the apparatus is raised to the precise temperature of the expected flash point by slight adjustment of the temperature dial. After 1 min, a test flame is applied inside the cup and note is taken as to whether the test sample flashes or not. If a repeat test is necessary, a fresh sample should be used.

3.2 For a finite flash measurement, the temperature is sequentially increased through the anticipated range, the test flame being applied at 9°F (5°C) intervals until a flash is ovserved. A repeat determination is then made using a fresh sample, starting the test at the temperature of the last interval before the flash point of the material and making tests at increasing 1°F (0.5°C) intervals.

4. Apparatus

4.1 *Setaflash Tester*[4], shown in Fig. X1, and described in Appendix X1.

4.2 *Thermometers*[5] conforming to specifica-

---

[1] These methods are under the jurisdiction of ASTM Committee D-1 on Paint, Varnish, Lacquer, and Related Products.

Current edition approved Oct. 29, 1973. Published December 1973.

[2] *1974 Annual Book of ASTM Standards*, Part 29.

[3] *1973 Annual Book of ASTM Standards*, Part 18.

[4] Unit shown in Fig. X1 is manufactured by Stanhope-Seta Ltd., Park Close, Egham, Surrey, England. It is available in the USA from Erdco Engineering Corp., 136 Official Road, Addison, Ill. 60101, or from Paul N. Gardner Co., Station 9, P. O. Box 6633, Fort Lauderdale, Fla. 33316.

[5] Thermometers may be obtained from the suppliers of the Setaflash.

tions given in Table X1. Test to determine that the scale error does not exceed 0.5°F (0.25°C). The use of a magnifying lens significantly assists in making temperature observations.

4.3 *Glass Syringe*, 2 ± 0.1-ml capacity at 77°F (25°C), to provide a means of taking a uniform sample. Check the capacity by discharging water into a weighing bottle and weighing. Adjust plunger if necessary. A disposable syringe of equal precision may be used.

4.4 *Cooling Block*, aluminum (described in Appendix X2) which fits snugly within the test cup for rapid cooling of the sample cup.

4.5 *Barometer.*

5. Reagents and Materials

5.1 *p-Xylene*[6]—Reference standard for checking the Setaflash Tester.

5.2 *Cooling Mixture* of ice water or dry ice (solid CO_2) and acetone.

5.3 *Liquefied Petroleum Gas.*

5.4 *Heat Transfer Paste*[7]

6. Sampling

6.1 The sample size for each test is 2 ml. Obtain at least a 25-ml sample from the bulk source and store in a nearly full tightly closed clean glass container or in other container suitable for the type of liquid being sampled.

6.2 Erroneously high flash points may be obtained if precautions are not taken to avoid loss of volatile material. Do not open sample containers unnecessarily and do not transfer the sample to the cup unless its temperature is at least 20°F (10°C) below the expected flash point. Discard samples in leaky containers.

7. Preparation of Apparatus

7.1 Prior to initial use or after removal of the thermometer, insert the thermometer into its pocket, Fig. X2, with a good heat transfer paste.

7.2 To help in making the necessary settings during a test, determine the relationship between the temperature control dial and thermometer readings at intervals not over 10°F (5°C) throughout the scale range of heater before the initial use.

7.3 Place the tester in a subdued light and in a position where it is not exposed to disturbing drafts. Provide a black-coated shield, if necessary.

7.4 Read the manufacturer's operating and maintenance instructions on the care and servicing of the tester. Observe the specific suggestions regarding the operation of its various controls.

7.5 Check the accuracy of the tester by determining the flash point of the *p*-xylene reference standard in duplicate (Appendix X3). The average of the results should be 81 ± 1.5°F (27.2 ± 0.8°C). If not, remove the thermometer and observe whether sufficient heat transfer paste surrounds the thermometer to provide good heat transfer from the cup to the thermometer.

METHOD A—FLASH/NO FLASH

8. Procedure—Ambient to 230°F (110°C)

8.1 Inspect the inside of the test cup, lid, and shutter mechanism for cleanliness and freedom from contamination. Use an absorbent tissue to wipe clean, if necessary. Lock the cover lid tightly in place.

8.2 Switch the tester on, if not already at stand-by. To rapidly approach the specification flash temperature of the charged sample, turn the heater dial fully clockwise (Note 2) causing the heater signal (red) light to glow. When the thermometer indicates a temperature of about 5°F (3°C) below the specification or target flash point temperature, reduce the heat input to the test cup by slowly turning the heater control dial counter clockwise until the signal light goes out (Note 3).

NOTE 2—When the correct temperature is dialed on the temperature controller, the elapsed time to reach it may be greater than when turned Full On, but less attention will be required in the intervening period.

NOTE 3—The test cup temperature is stable when the signal light slowly cycles on and off.

8.3 Determine the barometric pressure to determine the corrected specification temperature at that barometric pressure (see 13.2).

8.4 After the test cup temperature has stabilized at the specification or target flash point, charge the syringe with the sample to be tested and transfer the syringe to the filling orifice

[6] *P*-xylene is available as "Flash Point Check Fluid" from Special Products Div., Phillips Petroleum Co., Bartlesville, Okla.

[7] Heat transfer paste is available from the supplies of the Setaflash Tester. Dan Corning also can supply a similar paste as their no 340 silicone.

(Fig. X2) taking care not to lose any sample. Discharge the sample into the test cup by depressing the syringe plunger to its lowest position, then remove the syringe. If the sample has a viscosity greater than 45 SUS at 100°F (37.8°C) or equivalent of 9.5 cSt at 77°F (25.0°C), discharge the contents of the syringe directly into the cup. Immediately close tightly the lid and shutter assembly.

8.5 Set the 1-min timing device by rotating its knob clockwise to the required setting. In the meantime, open the gas control valve and light the pilot and the test flames. Adjust the test flame size with the pinch valve so as to match the size of the 5/32 in. (4-mm) diameter flame gage.

8.6 After 1 min has elapsed, observe the temperature. If at the specification temperature (accounting for the differences of the barometer reading from 760 mm), apply the test flame by slowly and uniformly opening the slide fully and closing completely over a period of approximately 2½ s. Watch for a flash.

NOTE 4—The sample is considered to have flashed only if a comparatively large blue flame appears and propagates itself over the surface of the liquid. Occasionally, particularly near the actual flash point temperature, application of the test flame may give rise to a halo; this should be ignored.

8.7 Turn off the test and the pilot flame. Clean the apparatus in preparation for the next test.

9. Procedure—32°F (0°C) to Ambient

9.1 If the specification or target flash point is at or below ambient temperature, cool the sample to 10 to 20°F (5 to 10°C) below that point by some convenient means.

9.2 Cool the tester to approximately the temperature of the sample by inserting the cooling block (Appendix X1.2) filled with a cooling mixture (Notes 5 and 6) into the sample well. Dry the cup with a paper tissue to remove any collected moisture prior to adding the sample.

NOTE 5: **Caution**—Be careful in handling the cooling mixture and cooling block; wear gloves and goggles. Mixtures such as dry ice and acetone can produce severe frost bite.

NOTE 6: **Caution**—Be careful in inserting the cooling block into the tester cup to prevent damage to the cup.

9.3 Introduce the sample as in 8.4. Allow the temperature to rise under ambient conditions or increase the temperature of the cup by rotating the heater controller clockwise slowly until the specification temperature adjusted for barometric pressure is reached. Determine whether the sample flashes as in 8.5 and 8.6.

9.4 Turn off the test and pilot flames. Clean up the apparatus.

METHOD B—FINITE FLASH POINT

10. Procedure—Ambient to 230°F (110°C)

10.1 *Preliminary or Trial Test*—Follow steps 8.1 to 8.5 omitting the barometric reading and using an estimated finite flash point instead of a specification flash point temperature.

10.2 After 1 min has elapsed, observe the temperature, apply the test flame by slowly and uniformly opening the slide fully and closing completely over a period of 2½ s. Watch for a flash (Note 3).

10.3 *Finite Flash Point*—If a flash is observed proceed as below.

10.3.1 Using a temperature of 9°F (5°C) lower than the temperature observed in 10.2, repeat 10.1 and 10.2 (Note 6). If a flash is still observed, repeat at 9°F (5°C) lower intervals until no flash is observed.

NOTE 7—Never make a repeat test on the same sample. Always take a fresh portion for each test.

10.3.2 Repeat 10.1 and 10.2 with a new sample, stabilizing the test cup temperature at the temperature at which no flash occurred previously. Observe if a flash occurs at this temperature. If no flash occurs, increase the temperature at 1°F (0.5°C) intervals by making small incremental adjustment to the temperature controller and allowing 1-min intervals between each increment and the flash point test. Record the temperature at which the flash acutally occurs. Record the barometric pressure. Turn off pilot and test flames and clean up tester.

10.4 *Finite Flash Point*—If no flash point is observed in 10.2, proceed as follows:

10.4.1 Using a test temperature of 9°F (5°C) higher than the temperature observed in 10.2, repeat steps 10.1 and 10.2 (Note 7). If no flash is observed, repeat at 9°F (5°C) higher intervals until a flash is observed.

10.4.2 Repeat step 10.3.2 with a new sample.

11. Procedure—32°F (0°C) to Ambient Temperature

11.1 *Preliminary or Trial Test*—Cool the sample to 5 to 10°F (3 to 5°C) below the expected flash point.

11.2 Cool the tester to approximately the temperature of the sample by inserting the cooling block filled with a cooling medium, into the sample well (Notes 4 and 5).

11.3 Insert the sample as in 8.4. Set the 1-min timing device. After 1 min, apply the test flame by slowly and uniformly opening the slide fully and closing completely over a period of approximately 2½ s. Observe for a flash (Note 3). Record the temperature.

11.4 *Finite Flash Point*—If a flash is observed, proceed as follows:

11.4.1 Cool a new sample and the sample cup to 9°F (5°C) below the previous temperature (11.3). After 1 min, check for a flash as in 11.3. If the sample flashes, repeat test at 9°F (5°C) lower intervals until no flash is observed.

11.4.2 Repeat with a new sample, cooling both sample and tester to the temperature at which the sample did not flash. After 1 min, observe if a flash occurs at this temperature, if not, increase the temperature at 1°F (0.5°C) intervals by making small incremental adjustments to the temperature controller, allowing 1 min between each increment and the test for the flash point. Record the temperature at which the flash actually occurs. Record the barometric pressure.

11.5 *Finite Flash Point*—If no flash point is observed proceed as follows:

11.5.1 Using a test temperature of 9°F (5°C) higher than the temperature observed in 11.3, repeat step 11.3 (Note 6). If no flash is observed, repeat at 9°F (5°C) higher intervals until flash is observed.

11.5.2 Using a new sample, repeat 11.4.2 until a flash occurs. Record the temperature at which the flash occurs and the barometric pressure.

12. Clean Up Of Apparatus and Preparation for Next Test

12.1 To prepare for the next test, unlock the lid assembly of the tester and raise to the hinge stop. Soak up liquid samples with an absorbent paper tissue and wipe dry. Clean the underside of the lid and filling orifice. A pipe cleaner may be of assistance in cleaning the orifice.

12.2 If the sample is a viscous liquid or contains dispersed solids, after soaking up most of the sample, add a small amount of a suitable solvent for the sample to the cup and then soak up the solvent and wipe clean the interior surfaces of the cup with an absorbent tissue paper.

NOTE 8—If necessary to remove residual high boiling solvent residues, moisten tissue with acetone and wipe clean.

NOTE 9—If any further cleaning is necessary, remove the lid and shutter assembly. Disconnect the silicone rubber hose and slide the lid assembly to the right to remove. If warm, handle carefully.

12.3 After the cup has been cleaned, its temperature may be rapidly increased to some stand-by value by turning the temperature control dial to an appropriate point.

NOTE 10—It is convenient to hold the test cup at some stand-by temperature (depending on planned usage) to conserve time in bringing the cup within the test temperature range. The cup temperature may be quickly lowered by inserting the aluminum cooling block filled with an appropriate cooling mixture into the cup.

12.4 The syringe is easily cleaned by filling it several times with acetone or any compatible solvent, discharging the solvent each time, and allowing the syringe to air dry with the plunger removed. Replace the plunger, and pump several times to replace any solvent vapor with air.

13. Correction for Barometric Pressure

13.1 When the barometric pressure differs from 760 mm Hg (101.3 kPa), calculate the flash point temperature by means of the following equations:

$$\text{Calculated flash point} = F + 0.06\,(760 - P)$$
$$= C + 0.03\,(760 - P)$$

where:

F, C = observed flash point, °F (or °C), and
P = barometric pressure, mm Hg.

13.2 Likewise determine the corrected specification flash point by the following equation:

$$F = S - 0.06\,(760 - P)$$
$$C = S - 0.03\,(760 - P)$$

where:

F, C = flash point to be observed to obtain the specification flash point at standard pressure (S),
S = specification flash point.

14. Report

14.1 When using the flash/no flash method, report whether the sample flashed at the required flash point and that the flash/no flash method was used.

14.2 If an actual flash point was determined, report the average of duplicate runs to nearest 1°F (0.5°C) provided the difference between the two values does not exceed 2°F (1°C).

15. Precision[8]

15.1 The following criteria should be used for judging the acceptability of results (95 % confidence):

15.1.1 Liquids at or below 45 SUS at 100°F or equivalent viscosity measurements.

15.1.1.1 *Repeatability*—The average of duplicate results obtained by the same operator on different days should be considered suspect if they differ by more than 3°F (1.7°C).

15.1.1.2 *Reproducibility*—The average of duplicate results, obtained by each of two laboratories should not be considered suspect unless they differ by more than 6°F (3.3°C).

15.1.2 Viscous liquids above 45 SUS at 100°F or liquids with dispersed solids.

15.1.2.1 *Repeatability*—Duplicate results obtained by the same operator on different days should be considered suspect if they differ by more than 6°F (3.3°C).

15.1.2.2 *Reproducibility*—The average of duplicate results obtained by each of two laboratories should not be considered suspect unless they differ by more than 9°F (5°C).

[8] Supporting data for this method has been filed at ASTM Headquarters RR 0-1-1000 and reported in Journal of Paint Technology, Vol 45, No. 581 Page 44.

APPENDIXES

X1. APPARATUS SPECIFICATIONS

X1.1 A typical apparatus is shown in Fig. X1 and X2. Electrical heaters are fastened to the cup in such a way so as to provide for efficient transfer of heat. The tester includes a variable heater control device with a scaled dial and a visible signal to indicate when energy is or is not being applied. Energy may be supplied from a 115 or 230-V a-c main service (for stationary use) or by a 12-V d-c battery service (for field use). A regulatable test flame and a pilot flame to maintain the test flame, are provided. These flames may be fueled by piped gas service (fixed location) or by a self-contained tank of liquefied petroleum gas (5.3) (for portability). A test flame, $\frac{1}{32}$ in. (4 mm) in diameter, is provided against which the size of the flame may be judged. Never recharge the gas tank with the pilot or test flames lighted, nor in the vicinity of other naked flames. A 1-min audible signal is a desirable accessory.

X2. COOLING BLOCK

X2.1 The cooling block with dimensions as shown in Fig. X3, is made of aluminum and covered with pipe insulation.

X3. SPECIFICATIONS FOR *P*-XYLENE REFERENCE STANDARD

X3.1 *Specific Gravity (60/60°F) (15.6/15.6°C)*—0.860 min, 0.866 max.

X3.2 *Boiling Range*—2°C max from start to dry point, when tested by Method D 850 or Method D 1078. The range shall include the boiling point of pure *p*-xylene, which is 138.35°C (281.03°F).

X3.3 *Freezing Point*—11.23°C min (95 % molal purity) as determined by Method D 1015.

KEY: Existing rules are printed in standard type face. Proposed additions to existing rules are printed in **boldface**, while proposed deletions from existing rules are printed within [single brackets]. Additions to proposed rules are **underlined and boldfaced,** while deletions from proposed rules are printed within [[double brackets]].

TABLE X1 Setaflash® Thermometers

ASTM No., Name	XXF (XXC), Setaflash Medium	XXF (XXC) Setaflash Low
Range	32 to 230°F (0 to 110°C)	−10°C + 160° (−23 to 70°C)
Immersion	44.5 ± 1 mm	44.5 ± 1 mm
Graduations:		
Subdivisions	1 ± F (1°C)	1°F (1°C)
Long lines at each	10°F (10°C)	10°F (10°C)
Number at each[a]	10°F (10°C)	10°F (10°C)
Scale error, max	0.5°F (0.25°C)	0.5°F (0.25°C)
Expansion chamber, for heat to[b]	248°F (120°C)	176°F (80°C)
Total length	204 ± 3 mm	204 ± 3 mm
Stem, OD	6 to 7 mm	6 to 7 mm
Bulb:		
Length	11.7 to 13.7 mm	11.7 to 13.7 mm
OD	4.7 to 5.7 mm	4.7 to 5.7 mm
Scale location:		
Bottom of bulb to 32°F (0°C)	49 to 51 mm	
Bottom of bulb to −10°F (−23°C)	...	59 mm to 61 mm
Bottom of bulb to 230°F (110°C)	163 to 176 mm	...
Bottom of bulb to 160°F (71°C)	...	183 to 185 mm

[a] Number so that figures are read from right to left in a horizontal plane.
[b] Expansion bulb to be nitrogen filled for horizontal operation.

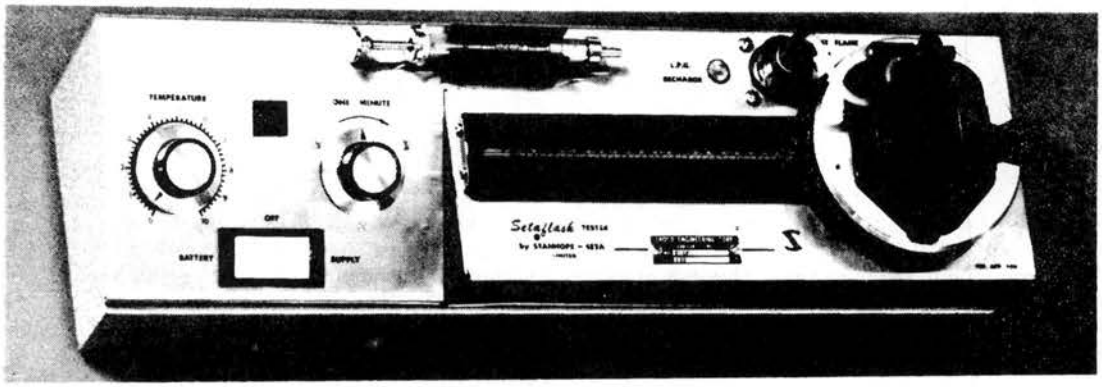

FIG. X1 Setaflash Tester.

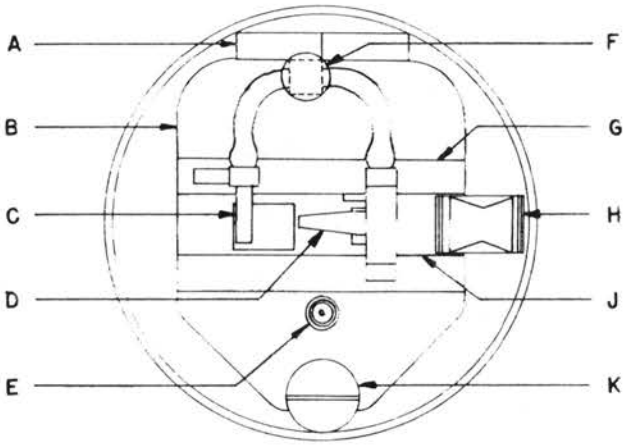

A - HINGE
B - LID
C - PILOT JET
D - TEST JET
E - FILLER ORIFICE
F - GAS CONTROL SCREW
G - SLIDE GUIDE
H - SLIDE KNOB
J - SLIDE
K - LOCK CLOSURE
L - SEALING O-RING
M - THERMOMETER
N - SAMPLE BLOCK
P - THERMOMETER POCKET

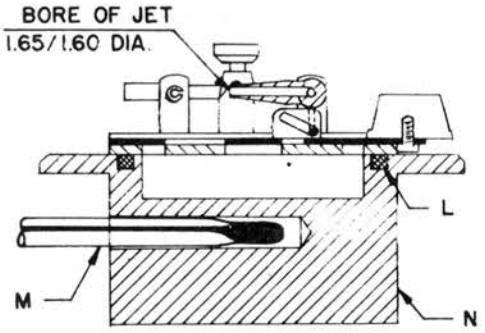

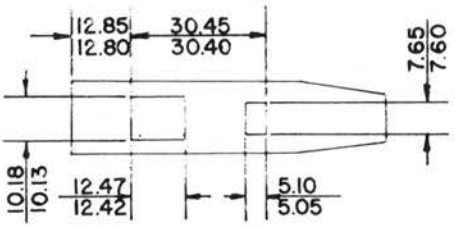

SLIDE (1.22 THICK APPROX.)

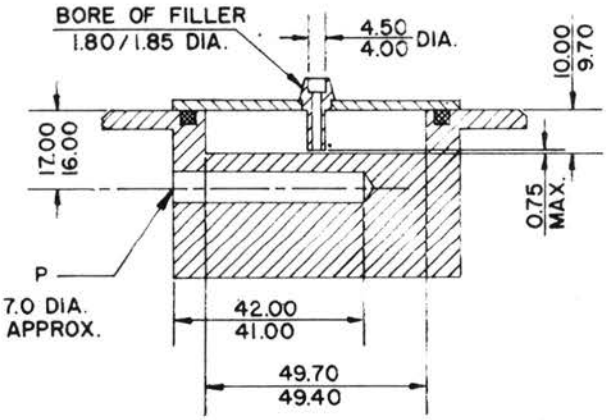

SAMPLE BLOCK

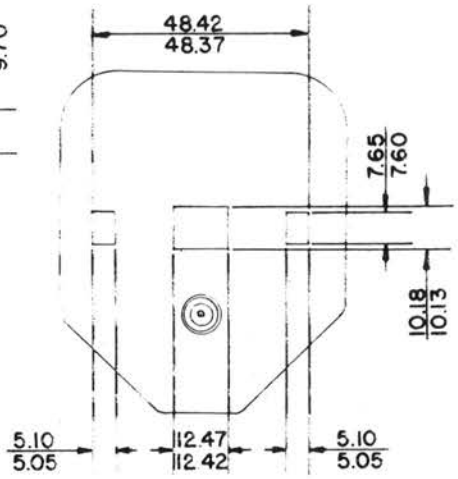

LID (2.00 THICK APPROX.)

FIG. X2 Setaflash Unit.

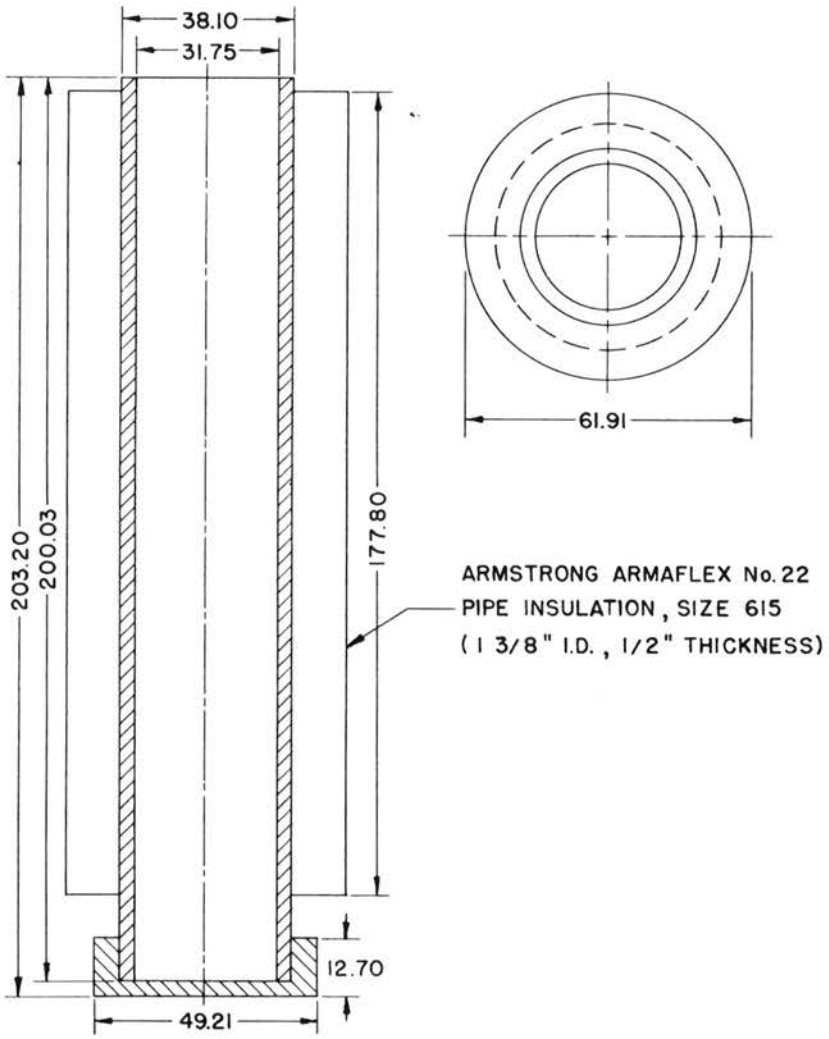

FIG. 3 Cooling Block

Appendix D

Designation: D 93 – 73 **IP Designation: 34/71**

AMERICAN SOCIETY FOR TESTING AND MATERIALS
1916 Race St., Philadelphia, Pa., 19103
Reprinted from the Annual Book of ASTM Standards, Copyright ASTM
If not listed in the current combined Index, will appear in the next edition

American National Standard Z11.7
American National Standards Institute
Method 1102—Federal Test
Method Standard No. 791b
Federation of Societies for
Paint Technology Standard No. Dt-5-66
British Standard 2839

Standard Method of Test for FLASH POINT BY PENSKY-MARTENS CLOSED TESTER[1]

ADOPTED (as method GO-7), 1924; LAST REVISED, 1971

This Standard of the American Society for Testing and Materials is issued under the fixed designation D 93; the number immediately following the designation indicates the year of original adoption or, in the case of revision, the year of last revision. A number in parentheses indicates the year of last reapproval. This is also a standard of the Institute of Petroleum issued under the fixed designation IP 34. The final number indicates the year of last revision.

This method was adopted as a joint ASTM-IP Standard in 1967.

1. Scope

1.1 This method covers the determination of the flash point by Pensky-Martens Closed Cup Tester of fuel oils, lube oils, suspensions of solids, liquids that tend to form a surface film under test conditions, and other liquids. For the determination of the flash point of drying oils and solvent-type waxes refer to Note 1.

NOTE 1—The flash point of drying oils may be determined using Method D 1393 and the flash point of solvent-type liquid waxes may be determined using Method D 1437.

NOTE 2—This method may be employed for the detection of contamination of lubricating oils by minor amounts of volatile materials.

2. Applicable Documents

2.1 *ASTM Standards:*

D 56 Test for Flash Point by Tag Closed Tester[2]

D 1310 Test for Flash Point of Liquids by Tag Open-Cup Apparatus[3]

D 1393 Test for Flash Point of Drying Oils[2]

D 1437 Test for Flash Point of Solvent-Type Liquid Waxes[4]

E 1 Specification for ASTM Thermometers[5]

3. Summary of Method

3.1 The sample is heated at a slow, constant rate with continual stirring. A small flame is directed into the cup at regular intervals with simultaneous interruption of stirring. The flash point is the lowest temperature at which application of the test flame causes the vapor above the sample to ignite.

4. Apparatus

4.1 *Pensky-Martens Closed Flash Tester*, as described in Appendix A1.

NOTE 3—There are automatic flash point testers available and in use which may be advantageous in the saving of testing time, permit the use of smaller samples, and have other factors which may merit their use. If automatic testers are used, the user must be sure that all of the manufacturer's instructions for calibrating, adjusting, and operating the instrument are followed. In any cases of dispute, the flash point as determined manually shall be considered the referee test.

4.2 *Thermometers*—Two standard thermometers shall be used with the ASTM Pensky-Martens tester, as follows:

4.2.1 For tests in which the indicated reading falls within the limits 20 to 200 F (−7 to +93 C), inclusive, an ASTM Pensky-Martens Low Range or Tag Closed Tester Thermometer having a range from 20 to 230 F (−5 to +110 C) and conforming to the requirements for Thermometers 9F (9C) and as prescribed in ASTM Specification E 1 or IP Thermometer 15F (15C) conforming to specifications given in Appendix A3, shall be used.

3.2.2 For tests in which the indicated reading falls within the limits 230 to 700 F (110 to 371 C), an ASTM Pensky-Martens High

[1] This method is under the jurisdiction of ASTM Committee D-2 on Petroleum Products and Lubricants.

Current edition approved Aug. 27, 1973. Published October 1973. Originally published as D 93 – 21 T. Last previous edition D 93 – 72.

In the IP, this method is under the jurisdiction of the Standardization Committee.

In 1971 the scope was revised.

[2] *Annual Book of ASTM Standards*, Part 20.

[3] *Annual Book of ASTM Standards*, Part 11.

[4] *Annual Book of ASTM Standards*, Part 22.

[5] *Annual Book of ASTM Standards*, Parts 18 and 30.

Range Thermometer having a range from 200 to 700 F (90 to 370 C) and conforming to the requirements for Thermometers 10F (10C) as prescribed in Specification E 1 or IP Thermometer 16F (16C) conforming to specifications given in Appendix A3, shall be used.

4.2.3 For the range 200 to 230 F (93 to 110 C) either thermometer may be used.

5. Preparation of Apparatus

5.1 Support the tester on a level, steady table. Unless tests are made in a draft-free room or compartment, it is good practice, but not required, to surround the tester on three sides with a shield, each section of which is about 18 in. (46 cm) wide and 24 in. (61 cm) high.

6. Preparation of Sample

6.1 Samples of very viscous materials may be warmed until they are reasonably fluid before they are tested. However, no sample should be heated more than is absolutely necessary. It shall never be heated above a temperature of 30 F (16 C) below its expected flash point.

6.2 Samples containing dissolved or free water may be dehydrated with calcium chloride or by filtering through a qualitative filter paper or a loose plug of dry absorbent cotton. Warming the sample is permitted, but it shall not be heated for prolonged periods or above a temperature of 30 F (16 C) below its expected flash point.

NOTE 4—If the sample is suspected of containing volatile contaminants, the treatment described in 6.1 and 6.2 should be omitted.

7. Procedure

7.1 Thoroughly clean and dry all parts of the cup and its accessories before starting the test, being sure to remove any solvent which had been used to clean the apparatus. Fill the cup with the sample to be tested to the level indicated by the filling mark. Place the lid on the cup and set the latter in the stove. Be sure to have the locating or locking device properly engaged. Insert the thermometer. Light the test flame and adjust it to $^{5}/_{32}$ in. (4 mm) in diameter. Supply the heat at such a rate that the temperature as indicated by the thermometer increases 9 to 11 F (5 to stirring in a downward direction.

7.2 If the sample is known to have a flash point of 220 (104 C) or below, apply the test flame when the temperature of the sample is from 30 F (17 C) to 50 F (28 C) below the expected flash point and thereafter at a temperature reading that is a multiple of 2 F (1 C). Apply the test flame by operating the mechanism on the cover which controls the shutter and test flame burner so that the flame is lowered into the vapor space of the cup in 0.5 s, left in its lowered position for 1 s, and quickly raised to its high position. Do not stir the sample while applying the test flame.

7.3 If the sample is known to have a flash point above 220 F (104 C) apply the test flame in the manner just described at each temperature that is a multiple of 5 F (3 C), beginning at a temperature of 30 F (17 C) to 50 F (28 C) below the expected flash point.

NOTE 5—When testing materials to determine if volatile contaminants are present, it is not necessary to adhere to the temperature limits for initial flame application as stated in 7.2 and 7.3.

7.4 Record as the flash point the temperature read on the thermometer at the time the test flame application causes a distinct flash in the interior of the cup. Do not confuse the true flash point with the bluish halo that sometimes surrounds the test flame at applications preceding the one that causes the actual flash.

DETERMINATION OF FLASH POINT OF SUSPENSIONS OF SOLIDS

8. Procedure

8.1 Bring the material to be tested and the tester to a temperature of 60 ± 10 F (15 ± 5 C) or 20 F (11 C) lower than the estimated flash point, whichever is lower. Completely fill the air space between the cup and the interior of the air bath with water at the temperature of the tester and sample. Turn the stirrer 250 ± 10 rpm, stirring in a downward direction. Raise the temperature throughout the duration of the test at a rate of not less than 2 nor more than 3 F (1 to 1.5 C)/min. With the exception of these requirements for rates of stirring and heating, proceed as prescribed in Section 7.

NOTE 6—Solid carbon dioxide (CO_2) (dry ice) shall in no case be used to obtain the proper rate of temperature rise, since CO_2 has a blanketing effect which leads to a false flash point.

9. Calculation and Report

9.1 Observe and record the barometric pressure at the time of the test. When the pressure differs from 760 mm Hg, correct the flash point by means of the following equations:

$$\text{Corrected flash point} = F + 0.06\,(760 - P)$$

or

$$\text{Corrected flash point} = C + 0.03\,(760 - P)$$

where:

F = observe flash point, deg F.
C = observe flash point, deg C.
P = barometric pressure, mm Hg.

9.2 Record the corrected flash point to the nearest 1 F or 0.5 C.

9.3 Report the recorded flash point as the Pensky-Martens Closed Cup Flash Point, ASTM D 93 - IP 34, of the sample tested.

10. Precision

10.1 The following criteria should be used for judging the acceptability of results (95 percent probability):

10.1.1 *Repeatability*—Duplicate results by the same operator should be considered suspect if they differ by more than the following amounts:

Material	Flash Point Range	Repeatability
Suspensions of solids	95 to 110 F (35 to 43.3 C)	4 F (2.0 C)
All others	220 F (104.4 C) and under	4 F (2.0 C)
	Above 220 F (104.4 C)	10 F (5.5 C)

10.1.2 *Reproducibility*—The results submitted by each of two laboratories should be considered suspect if the two results differ by more than the following amounts:

Material	Flash Point Range	Reproducibility
Suspensions of solids	95 to 110 F (35 to 43.3 C)	6 F (3.5 C)
All others	220 F (104.4 C) and under	6 F (3.5 C)
	Above 220 F (104.4 C)	15 F (8.5 C)

10.2 The following criteria should be used for judging the acceptability of results (95 percent confidence) obtained on viscous and/or heavily pigmented (paint or varnish) materials which tend to form a surface film:

10.2.1 *Repeatability*—The average of two tests by the same operator on the same day compared to two tests on another day should be considered suspect if they differ by more than 9 F (5 C).

10.2.2 *Reproducibility*—The average of two tests by an operator on the same day compared to the average of two tests by another operator (or another laboratory) on any one day should be considered suspect if they differ by more than 18 F (10.0 C).

10.2.3 The definition of Repeatability and Reproducibility given here represents different parameters of the variance of the method; those given in 10.1 are derived from standards of ASTM Committee D-2 and the Institute of Petroleum, while those in 10.2 are from ASTM Committee D-1.

APPENDIXES

A1. Apparatus Specifications

A1.1 A typical assembly of the apparatus, gas heated, is shown in Fig. A1. The apparatus shall consist of a test cup, cover, and stove conforming to the following requirements:

A1.1.1 *Cup*—The cup shall be of brass, or other nonrusting metal of equivalent heat conductivity, and shall conform to the dimensional requirements in Fig. A2. The flange shall be equipped with devices for locating the position of the cup in the stove. A handle attached to the flange of the cup is a desirable accessory. The handle shall not be so heavy as to tip over the empty cup.

A1.1.2 *Cover:*

A1.1.2.1 *Cover Proper*—The cover shown in Fig. A3 shall be of brass (A1.1.1.1), and shall have a rim projecting downward almost to the flange of the cup. The rim shall fit the outside of the cup with a clearance not exceeding 0.014 in. on the diameter. There shall be a locating or locking device, or both engaging with a corresponding device on the cup. The four openings in the cover, *A*, *B*, *C*, and *D*, are shown in Fig. A3. The upper edge of the cup shall be in close contact with the inner face of the cover throughout its circumference.

A1.1.2.2 *Shutter*—The cover shall be equipped with a brass (Section 3) shutter (Fig. A4), approximately $^{3}/_{32}$ in. thick, operating on the plane of the upper surface of the cover. The shutter shall be so shaped and mounted that it rotates on the axis of the horizontal center of the cover

between two stops, so placed, that when in one extreme position, the openings *A*, *B*, and *C* in the cover are completely closed, and when in the other extreme position, these openings are completely opened. The mechanism operating the shutter should be of the spring type and constructed so that when at rest the shutter shall exactly close the three openings. When operated to the other extreme, the three cover openings shall be exactly open and the tip of the exposure tube shall be fully depressed.

A1.1.2.3 *Flame-Exposure Device*—The flame-exposure device (Fig. A4) shall have a tip with an opening 0.027 to 0.031 in. in diameter. This tip shall be made preferably of stainless steel, although it may be fabricated of other suitable metals. The flame-exposure device shall be equipped with an operating mechanism which, when the shutter is in the "open" position, depresses the tip so that the center of the orifice is between the planes of the under and upper surfaces of the cover proper at a point on a radius passing through the center of the larger opening A (Fig. A3).

A1.1.2.4 *Pilot Flame*—A pilot flame shall be provided for automatic relighting of the exposure flame. A bead $^{5}/_{32}$ in. in diameter may be mounted on the cover so that the size of the test flame can be regulated by comparison. The tip of the pilot flame shall have an opening the same size as the tip of the flame exposure device (0.027 to 0.031 in. in diameter).

A1.1.2.5 *Stirring Device*—The cover shall be equipped with a stirring device (Fig. A4) mounted in the center of the cover and carrying two 2-bladed metal propellers. A stirrer shaft may be coupled to the motor by a flexible shaft or a suitable arrangement of pulleys.

A1.1.3 *Stove*—Heat shall be supplied to the cup by means of a properly designed stove which is equivalent to an air bath. The stove shall consist of an air bath and a top plate on which the flange of the cup rests.

A1.1.3.1 *Air Bath*—The air bath shall have a cylindrical interior and shall conform to the dimensional requirements in Fig. A1. The air bath may be either a flame or electrically heated metal casting (Note A1), or an electric-resistance element (Note A2). In either case, the air bath must be suitable for use at the temperatures to which it will be subjected without deformation.

NOTE A1—If the heating element is a flame or electrically heated metal casting, it shall be so designed and used that the temperatures of the bottom and the walls are approximately the same. On this account it should be not less than $^{1}/_{4}$ in. in thickness. The casting shall be designed so that products of combustion of the flame cannot pass up and come into contact with the cup.

NOTE A2—If the air bath is of the electric-resistance heated type, it shall be constructed so that all parts of the interior surface are heated uniformly. The wall and bottom of the air bath shall be not less than $^{1}/_{4}$ in. in thickness.

A1.1.3.2 *Top Plate*—The top plate shall be of metal, and shall be mounted with an air gap between it and the air bath. It may be attached to the air bath by means of three screws and spacing bushings. The bushings should be of proper thickness to define an air gap of $^{3}/_{16}$ in., and they shall be not more than $^{3}/_{8}$ in. in diameter.

A2. Manufacturing Standardization of Thermometer and Ferrule

A2.1 The low-range thermometer, which conforms also to the specification for the cup thermometer in the Tag closed tester (Method D 56) and which frequently is fitted with a metal ferrule intended to fit the collar on the cover of the Tag flash tester, can be supplemented by an adapter (Fig. A5) to be used in the larger diameter collar of the Pensky-Martens apparatus. Differences in dimensions of these collars, which do not affect test results, are a source of unnecessary trouble to manufacturers and suppliers of instruments, as well as to users.

A2.2 Subcommittee 21 on Metalware Laboratory Apparatus, of ASTM Committee E-1 on Methods of Testing, has studied this problem and has established some dimensional requirements which are shown in Fig. A5. Conformity to these requirements is not mandatory, but is desirable to users as well as suppliers of Pensky-Martens Testers.

A3. THERMOMETER SPECIFICATIONS

TABLE A1 IP Thermometer Specifications

NOTE—The stem shall be made with an enlargement having a diameter of 1.5 to 2.0 mm greater than the stem and a length of 3 to 5 mm, the bottom of the enlargement being 64 to 66 mm from the bottom of the bulb. These dimensions shall be measured with the test gage shown in Fig. 1 of Specification E 1.[8]

Name	IP 15F	IP 15C	IP 16F	IP 16C
	Pensky-Martens Low		Pensky-Martens High	
Range	20 to 230 F	−7 to +110 C	200 to 700 F	90 to 370 C
Graduation	1 F	0.5 C	5 F	2 C
Immersion, mm	57	57	57	57
Over-all length ±10 mm	280	280	280	280
Stem diameter, mm	5.5 to 8.0	5.5 to 8.0	5.5 to 8.0	5.5 to 8.0
Bulb shape	cylindrical	cylindrical	cylindrical	cylindrical
Bulb length, mm	9 to 13	9 to 13	10 max	10 max
Bulb diameter, mm	not less than 5.5 and not greater than stem	not less than 5.5 and not greater than stem	not less than 5.5 and not greater than stem	not less than 5.5 and not greater than stem
Length of graduated portion, mm	143 to 177	143 to 177	143 to 177	143 to 177
Distance bottom of bulb to, mm	20 F 75 to 90	−7 C 75 to 90	200 F 75 to 90	90 C 75 to 90
Longer lines at each	5 F	1 C and 5 C	25 F	10 and 20 C
Figured at each	10 F	5 C	50 F	20 C
Expansion chamber	Required	Required	Required	Required
Top finish	Ring	Ring	Ring	Ring
Scale error not to exceed ±	1 F	0.5 C	2.5 to 500 C 3.5 F above 500 F	1 to 260 C 2 C above 260 C
See notes	1 and see table for emergent stem temperatures	1 and see table for emergent stem temperatures	1 and see table for emergent stem temperatures	1 and see table for emergent stem temperatures

TABLE A3 Standardization Temperatures

NOTE—The emergent column temperatures are those attained when using the thermometers in the test equipment for which the thermometers were originally designed. In some cases these temperatures are markedly different from those realized during standardization.

Temperature	Average Temperature of Emergent Column	Temperature	Average Temperature of Emergent Column
Thermometer 9F (20 to 230 F)		Thermometer 9C (−5 to +100 C)	
32 F	66 F	0 C	19 C
100 F	86 F	35 C	28 C
160 F	106 F	70 C	40 C
220 F	123 F	105 C	50 C
IP 15F (20 to 230 F)		IP 15C (−7 to 110 C)	
32 F	66 F	0 C	19 C
70 F	70 F	20 C	20 C
100 F	86 F	40 C	31 C
150 F	104 F	70 C	40 C
212 F	118 F	100 C	48 C

Temperature	Average Temperature of Emergent Column	Temperature	Average Temperature of Emergent Column
Thermometer 10F (200 to 700 F)		Thermometer 10C (90 to 370 C)	
212 F	141 F	100 C	61 C
390 F	159 F	200 C	71 C
570 F	180 F	300 C	87 C
700 F	220 F	370 C	104 C
IP 16F (20 to 700 F)		IP 16C (90 to 370 C)	
200 F	140 F	100 C	61 C
300 F	149 F	150 C	65 C
400 F	160 F	200 C	71 C
500 F	175 F	250 C	78 C
600 F	195 F	300 C	87 C
700 F	220 F	350 C	99 C

(Table A2 on next page)

TABLE A2 Specifications for ASTM Thermometers
All dimensions are in millimeters.
See Table A3 for Standardization Temperatures.

ASTM No. and Name	Range	For Test at	Immersion	Graduations			Scale Error max	Special Inscription	Expansion Chamber
				Subdivisions	Long Lines at Each	Number at Each			Permit Heating to
9C – 62 Pensky-Martens, Low Range Tag Closed Tester	−5 to +110 C		57	0.5 C	1 C	5 C	0.5 C	ASTM 9C or 9F 57 MM IMM	160 C
9F – 62	20 to 230 F			1 F	5 F	10 F	1 F		320 F
10C – 62 Pensky-Martens, High Range	90 to 370 C		57	2 C	10 C	20 C	[a]	ASTM 10C or 10F 57 MM IMM	
10F – 62	200 to 700 F			5 F	25 F	50 F	[b]		

[a] Scale error: 1 C up to 260 C; 2 C over 260 C.
[b] Scale error: 2.5 F up to 500 F; 3.5 F over 500 F.
[c] An expansion chamber is provided for relief of gas pressure to avoid distortion of the bulb at higher temperatures. It is not for the purpose of joining mercury separations; and under no circumstances should the thermometer be heated above the highest temperature reading.

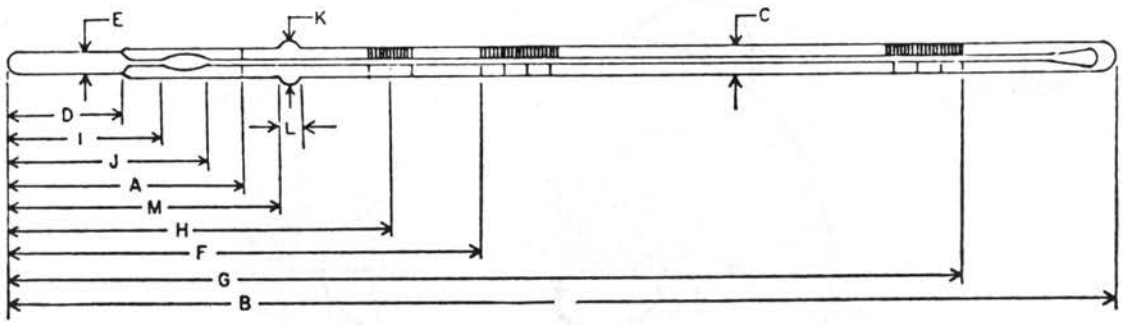

		Bulb		Scale Location				Ice Point Scale		Contraction Chamber		Stem Enlargement		
Total Length, ±5	Stem OD	Length	OD	Bottom of Bulb to Line at	Distance	Bottom of Bulb to Line at	Distance	Range	Bottom of Bulb to Ice Point	Distance to Bottom, min	Distance to Top, max	OD	Length	Distance to Bottom
B	C	D	E		F		G	H		I	J	K	L	M
				0 C		100 C								
	6.0	9.0	≯		85		221					7.5	2.5	64
287	to	to	stem		to		to					to	to	to
	7.0	13			98		237					8.5	5.0[d]	66
				32 F		212 F								
				110 C		360 C								
	6.0	8.0	4.5		86		227					7.5	2.5	64
287	to	to	to		to		to					to	to	to
	7.0	10	6.0		99		245					8.5	5.0[d]	66
				230 F		680 F								

[d] The length of the enlargement, and the distance from the bottom of the enlargement to the bottom of the bulb shall be measured with the test gage shown in Fig. A6.

KEY: Existing rules are printed in standard type face. Proposed additions to existing rules are printed in **boldface**, while proposed deletions from existing rules are printed within [single brackets]. Additions to proposed rules are **underlined and boldfaced**, while deletions from proposed rules are printed within [[double brackets]].

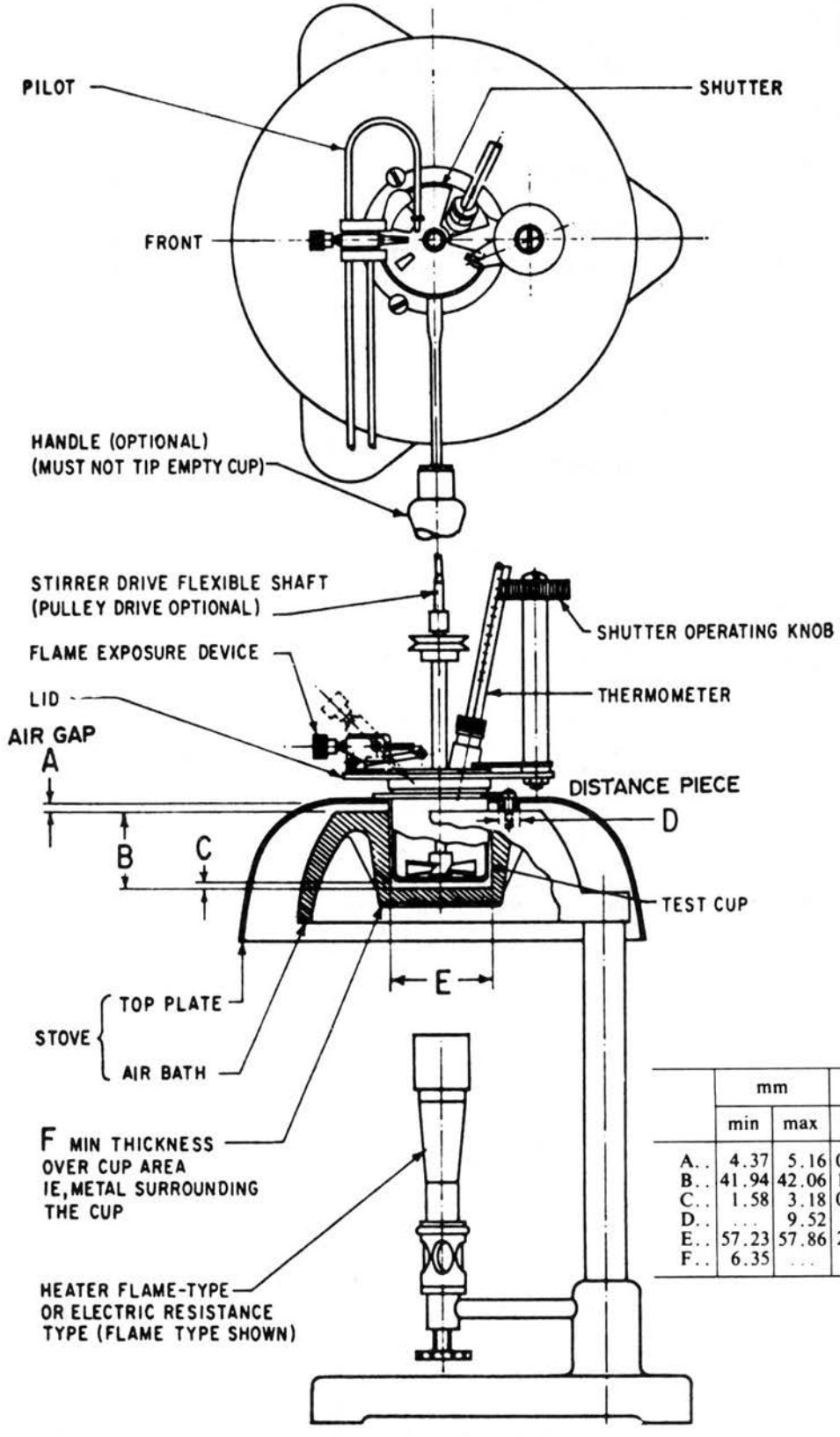

	mm		in.	
	min	max	min	max
A..	4.37	5.16	0.172	0.203
B..	41.94	42.06	1.651	1.656
C..	1.58	3.18	0.062	0.125
D..	...	9.52	...	0.375
E..	57.23	57.86	2.253	2.278
F..	6.35	...	0.25	...

NOTE—Lid assembly may be positioned either right or left-handed.

FIG. A1 Pensky-Martens Closed Flash Tester.

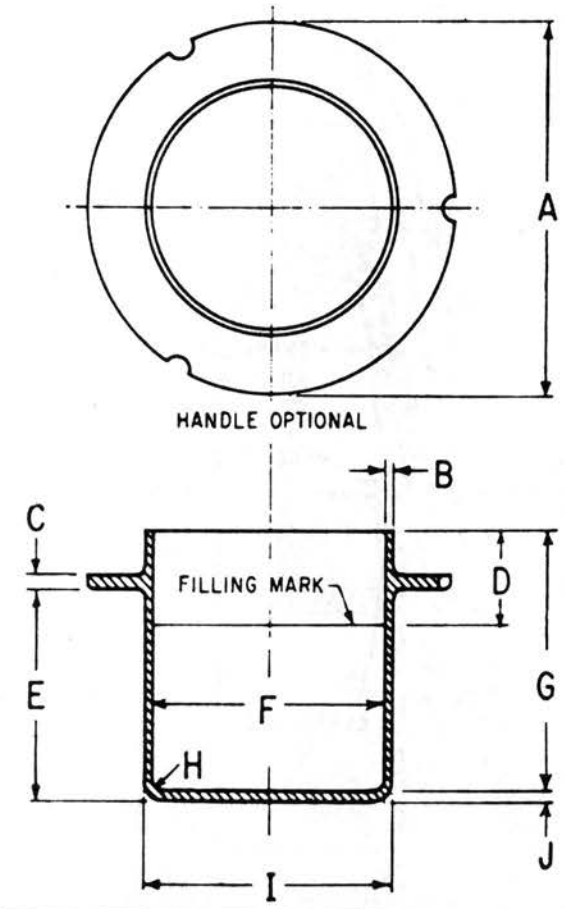

	mm		in.	
	min	max	min	max
A	79.0	79.8	3.11	3.14
B	1.0	...	0.04	...
C	2.8	3.6	0.11	0.14
D	21.72	21.84	0.855	0.860
E	45.47	45.72	1.790	1.800
F	50.72	50.85	1.997	2.002
G	55.75	56.00	2.195	2.205
H	3.8	4.0	0.15	0.16
I	53.90	54.02	2.122	2.127
J	2.29	2.54	0.090	0.100

FIG. A2 Test Cup.

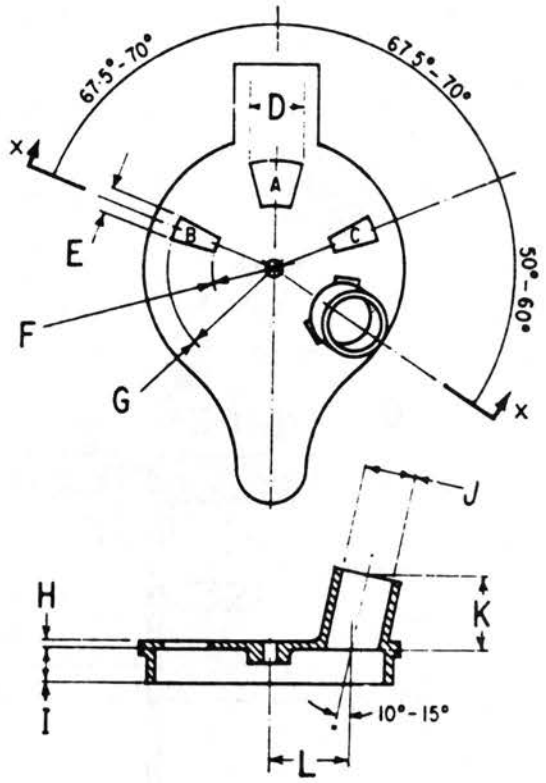

	mm		in.	
	min	max	min	max
D	12.7	13.5	0.50	0.53
E	4.8	5.6	0.19	0.22
F	13.5	14.3	0.53	0.56
G	23.8	24.6	0.94	0.97
H	1.2	2.0	0.05	0.08
I	7.9	...	0.31	...
J	12.27	12.32	0.483	0.485
K	16.38	16.64	0.645	0.655
L	18.65	19.45	0.734	0.766

FIG. A3 Cover Proper.

KEY: Existing rules are printed in standard type face. Proposed additions to existing rules are printed in **boldface**, while proposed deletions from existing rules are printed within [single brackets]. Additions to proposed rules are **underlined and boldfaced**, while deletions from proposed rules are printed within [[double brackets]].

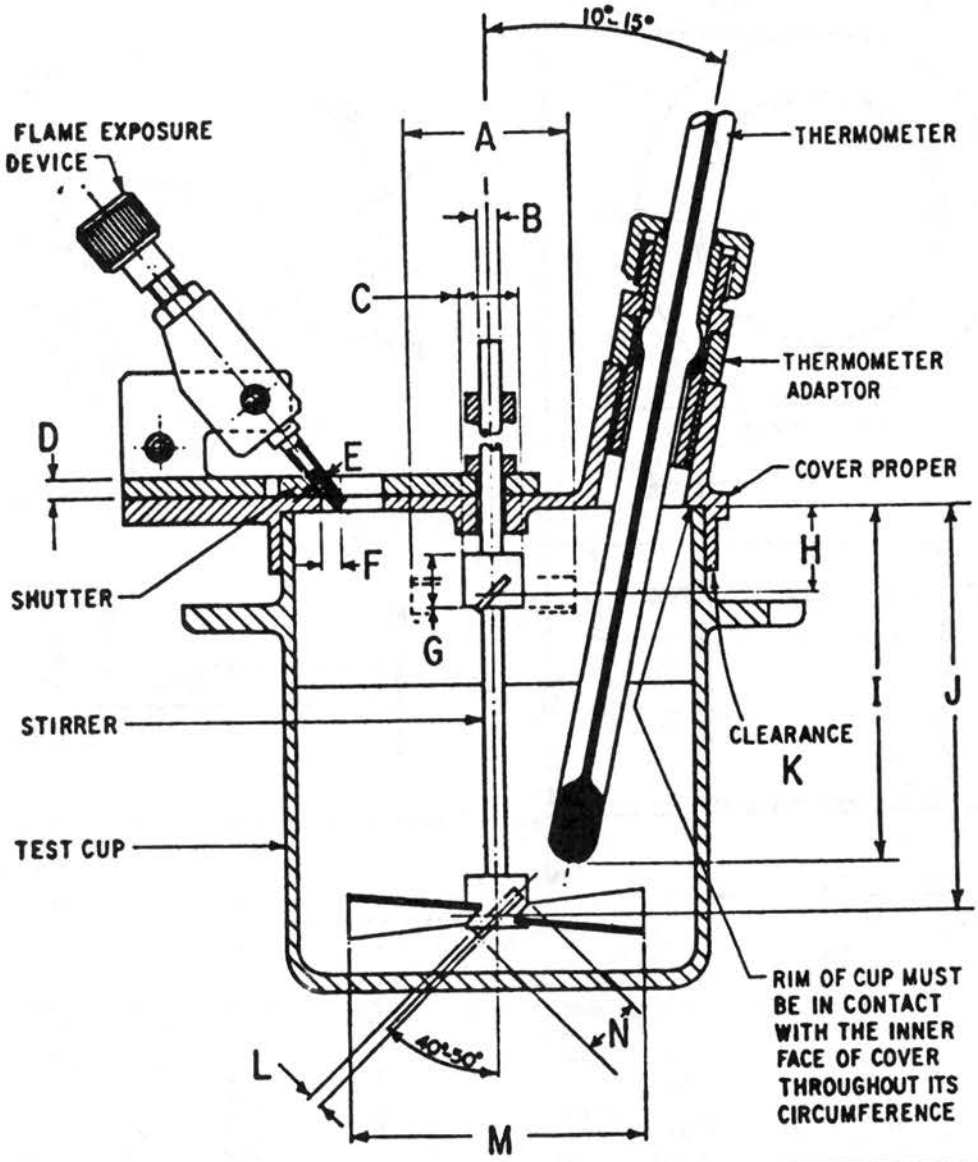

	mm		in.	
	min	max	min	max
A	18.3	19.8	0.72	0.78
B	2.38	3.18	0.094	0.125
C	7.6	8.4	0.30	0.33
D	2.0	2.8	0.08	0.11
E	0.69	0.79	0.027	0.031
F	2.0	2.8	0.08	0.11
G	6.4	10.4	0.25	0.41
H	9.6	11.2	0.38	0.44
I[a]	43.0	46.0	1.69	1.81
J	50.0	51.6	1.97	2.03
K	...	0.36	...	0.014
L	1.22	2.06	0.048	0.08
M	31.8	44.4	1.25	1.75
N	7.6	8.4	0.30	0.33

[a] Includes tolerance for length of thermometer given in ASTM Specification E 1,[5] ASTM Thermometers.

FIG. A4 Test Cup and Cover Assembly.

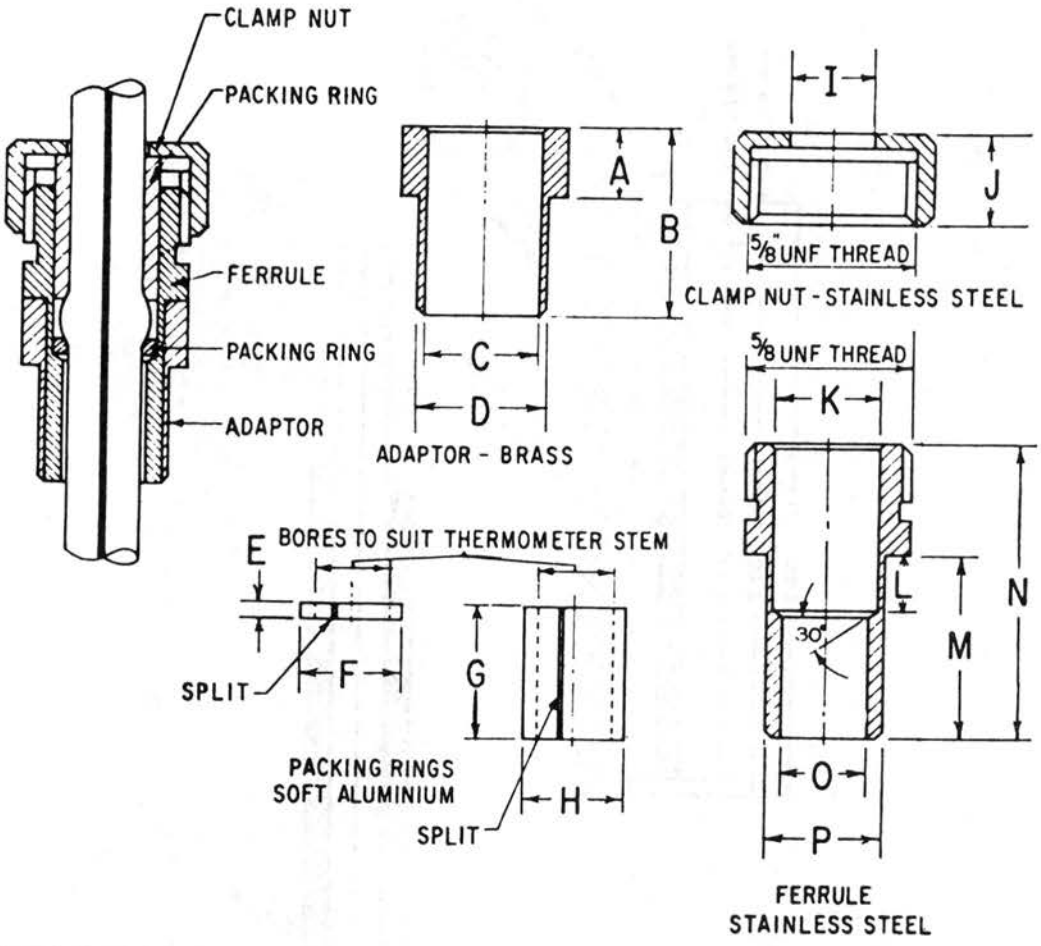

	mm		in.	
	min	max	in.	max
A	6.20	6.50	0.244	0.256
B	17.0	18.0	0.67	0.71
C	9.80	9.85	0.386	0.388
D	12.19	12.24	0.480	0.482
E	1.40	1.65	0.055	0.065
F	8.56	8.61	0.337	0.339
G	12.4	13.0	0.49	0.57
H	8.56	8.61	0.337	0.339
I	8.1	8.6	0.32	0.34
J	9.9	10.7	0.39	0.42
K	8.64	8.69	0.340	0.342
L	5.1	5.6	0.20	0.22
M	17.0	17.5	0.67	0.69
N	27.4	28.2	1.08	1.11
O	7.11	7.16	0.280	0.282
P	9.73	9.78	0.383	0.385

FIG. A5 Dimensions for Thermometer Adaptor, Ferrule, and Packing Ring.

KEY: Existing rules are printed in standard type face. Proposed additions to existing rules are printed in **boldface**, while proposed deletions from existing rules are printed within [single brackets]. Additions to proposed rules are **underlined and boldfaced**, while deletions from proposed rules are printed within [[double brackets]].

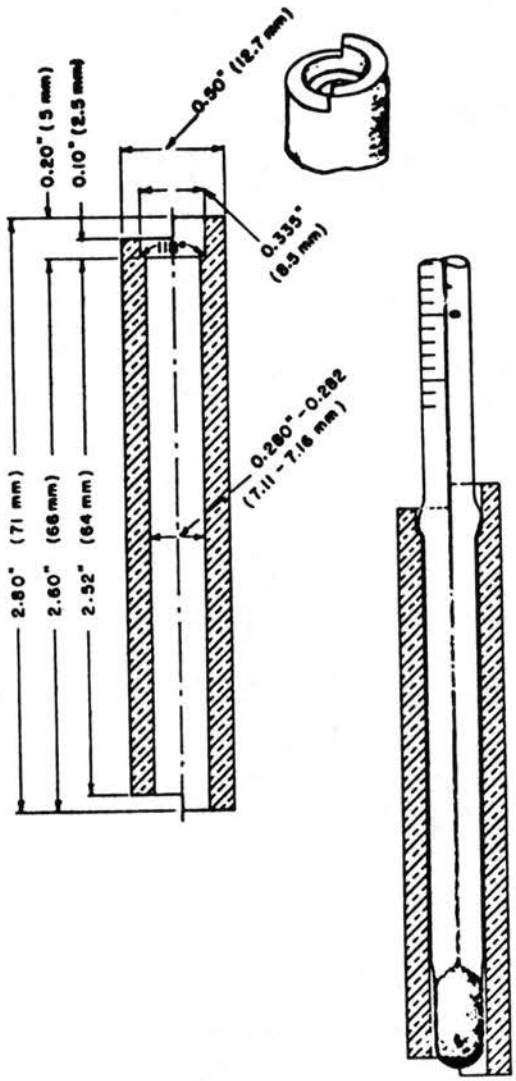

FIG. A6 Test Gage for Checking Enlargements on Thermometers.

By publication of this standard no position is taken with respect to the validity of any patent rights in connection therewith, and the American Society for Testing and Materials does not undertake to insure anyone utilizing the standard against liability for infringement of any Letters Patent nor assume any such liability.

Appendix E

AMERICAN SOCIETY FOR TESTING AND MATERIALS

1916 Race St., Philadelphia, Pa. 19103

Reprinted from the Annual Book of ASTM Standards Copyright ASTM

THIS

Standard Method for

CLASSIFICATION OF SOILS FOR ENGINEERING PURPOSES[1]

ASTM Designation: D 2487 – 69

This Standard of the American Society for Testing and Materials is issued under the fixed designation D 2487; the number immediately following the designation indicates the year of original adoption or, in the case of revision, the year of last revision. A number in parentheses indicates the year of last reapproval.

1. Scope

1.1 This method describes a system for classifying mineral and organo-mineral soils for engineering purposes based on laboratory determination of particle-size characteristics, liquid limit, and plasticity index, and shall be used when precise classification is required.

NOTE 1—This method provides qualitative data only. When quantitative information is required for detailed designs of important structures, this method must be supplemented by laboratory tests or other quantitative data to determine performance characteristics of the soil under expected field conditions.

NOTE 2—This method may also be used as an aid in training personnel in the use of ASTM Recommended Practice D 2488, for Description of Soils (Visual-Manual Procedure).[2]

2. Apparatus

2.1 *Apparatus for Preparation of Samples*—See Method D 421, for Dry Preparation of Soil Samples for Grain-Size Analysis and Determination of Soil Constants[2] or ASTM Method D 2217, for Wet Preparation of Soil Samples for Grain Size Analysis and Determination of Soil Constants.[2]

2.2 *Apparatus for Liquid Limit Test*—See ASTM Method D 423, Test for Liquid Limit of Soils.[2]

2.3 *Apparatus for Plastic Limit Test*—See ASTM Method D 424, Test for Plastic Limit and Plasticity Index of Soils.[2]

2.4 *Apparatus for Particle Size Analysis*—See 2. Apparatus, of ASTM Method D 422, for Grain-Size Analysis of Soils,[2] ASTM Method D 1140, Test for Amount of Materials in Soils Finer than the No. 200 Sieve,[2] and the classification chart (Fig. 1).

3. Sampling

3.1 Sampling shall be conducted in accordance with ASTM Method D 1452, for Soil Investigation and Sampling by Auger Borings,[2] ASTM Method D 1586, for Penetration Test and Split-Barrel Sampling of Soils,[2] ASTM Method D 1587, for Thin-Walled Tube Sampling of Soils,[2] or another standard accepted procedure.

[1] Under the standardization procedure of the Society, this method is under the jurisdiction of the ASTM Committee D-18 on Soil and Rock for Engineering Purposes. A list of members may be found in the ASTM Yearbook.

Current edition effective Nov. 14, 1969. Originally issued 1966. Replaces D 2487 – 66 T.

[2] *Annual Book of ASTM Standards*, Part 11.

3.2 The sample shall be carefully identified as to origin by a boring number and sample number in conjunction with a job number, a geologic stratum, a pedologic horizon or a location description with respect to a permanent monument, a grid system or a station number and offset with respect to a stated centerline.

3.3 The sample should also be described in accordance with ASTM Recommended Practice D 2488.

NOTE 3—A soil which is composed primarily of undecayed or partially decayed organic matter and has a fibrous texture, dark brown to black color, and organic odor should be designated as a *highly organic soil*, PT, and not subjected to the classification procedures described hereafter.

4. Test Sample

4.1 Test samples shall represent that portion of the field sample finer than the 3-in. (76-mm) sieve and shall be obtained as follows:

4.1.1 Air dry the field sample,

4.1.2 Weigh the field sample,

4.1.3 Separate the field sample into two fractions on a 3-in. (76-mm) sieve, and

4.1.4 Weigh the fraction retained on the 3-in. (76-mm) sieve. Compute the percentage of plus 3-in. (76-mm) material in the field sample, and note this percentage as auxiliary information.

4.1.5 Thoroughly mix the fraction passing the 3-in. (76-mm) sieve and select test samples.

5. Preliminary Classification Procedure

5.1 Procedure for the determination of percentage finer than the No. 200 sieve.

5.1.1 From the material passing the 3-in. (76-mm) sieve select a test sample and determine the percentage of the test sample finer than the No. 200 sieve in accordance with Method D 1140.

NOTE 4—Step 5.1.1 may be omitted if the soil can obviously be classified as fine-grained by visual inspection (see 5.3).

5.2 Classify the soil as *coarse-grained* if more than 50 per cent of the test sample is retained on the No. 200 sieve and follow 6, Procedure for Classification of Coarse-Grained Soils.

5.3 Classify the soil as *fine-grained* if 50 per cent or more of the test sample passes the No. 200 sieve and follow 7, Procedure for Classification of Fine-Grained Soils.

6. Procedure for Classification of Coarse-Grained Soils (More than 50 per cent retained on No. 200 Sieve).

6.1 Select test samples from the material passing the 3-in. (76-mm) sieve for the determination of particle-size characteristics, liquid limit, and plasticity index in accordance with ASTM Method D 421 or ASTM Method D 2217.

6.2 Determine the cumulative particle-size distribution of the fraction coarser than the No. 200 sieve in accordance with ASTM Method D 422.

6.3 Classify the sample as *gravel*, G, if 50 per cent or more of the coarse fraction (plus No. 200 sieve) is retained on the No. 4 sieve.

6.4 Classify the sample as *sand*, S, if more than 50 per cent of the coarse fraction (plus No. 200 sieve) passes the No. 4 sieve.

6.5 If less than 5 per cent of the test sample passed the No. 200 sieve as determined in 5.1.1, compute the coefficient of uniformity, C_u, and coefficient of curvature, C_z as given in Equations 1 and 2.

$$C_u = \frac{D_{60}}{D_{10}} \quad (1)$$

$$C_z = \frac{(D_{30})^2}{D_{10} \times D_{60}} \quad (2)$$

MAJOR DIVISIONS			GROUP SYMBOLS	TYPICAL NAMES
COARSE-GRAINED SOILS More than 50% retained on No. 200 sieve*	GRAVELS 50% or more of coarse fraction retained on No. 4 sieve	CLEAN GRAVELS	GW	Well-graded gravels and gravel-sand mixtures, little or no fines
			GP	Poorly graded gravels and gravel-sand mixtures, little or no fines
		GRAVELS WITH FINES	GM	Silty gravels, gravel-sand-silt mixtures
			GC	Clayey gravels, gravel-sand-clay mixtures
	SANDS More than 50% of coarse fraction passes No. 4 sieve	CLEAN SANDS	SW	Well-graded sands and gravelly sands, little or no fines
			SP	Poorly graded sands and gravelly sands, little or no fines
		SANDS WITH FINES	SM	Silty sands, sand-silt mixtures
			SC	Clayey sands, sand-clay mixtures
FINE-GRAINED SOILS 50% or more passes No. 200 sieve*	SILTS AND CLAYS Liquid limit 50% or less		ML	Inorganic silts, very fine sands, rock flour, silty or clayey fine sands
			CL	Inorganic clays of low to medium plasticity, gravelly clays, sandy clays, silty clays, lean clays
			OL	Organic silts and organic silty clays of low plasticity
	SILTS AND CLAYS Liquid limit greater than 50%		MH	Inorganic silts, micaceous or diatomaceous fine sands or silts, elastic silts
			CH	Inorganic clays of high plasticity, fat clays
			OH	Organic clays of medium to high plasticity
Highly Organic Soils			PT	Peat, muck and other highly organic soils

* Based on the material passing the 3-in. (76-mm) sieve.

FIG. 1—Soil Classification Chart.

CLASSIFICATION CRITERIA		
Classification on basis of percentage of fines Less than 5% Pass No. 200 sieve GW, GP, SW, SP More than 12% Pass No. 200 sieve GM, GC, SM, SC 5% to 12% Pass No. 200 sieve Borderline Classification requiring use of dual symbols	$C_u = D_{60}/D_{10}$ Greater than 4 $C_z = \frac{(D_{30})^2}{D_{10} \times D_{60}}$ Between 1 and 3	
	Not meeting both criteria for GW	
	Atterberg limits plot below "A" line or plasticity index less than 4	Atterberg limits plotting in hatched area are borderline classifications requiring use of dual symbols
	Atterberg limits plot above "A" line and plasticity index greater than 7	
	$C_u = D_{60}/D_{10}$ Greater than 6 $C_z = \frac{(D_{30})^2}{D_{10} \times D_{60}}$ Between 1 and 3	
	Not meeting both criteria for SW	
	Atterberg limits plot below "A" line or plasticity index less than 4	Atterberg limits plotting in hatched area are borderline classifications requiring use of dual symbols
	Atterberg limits plot above "A" line and plasticity index greater than 7	

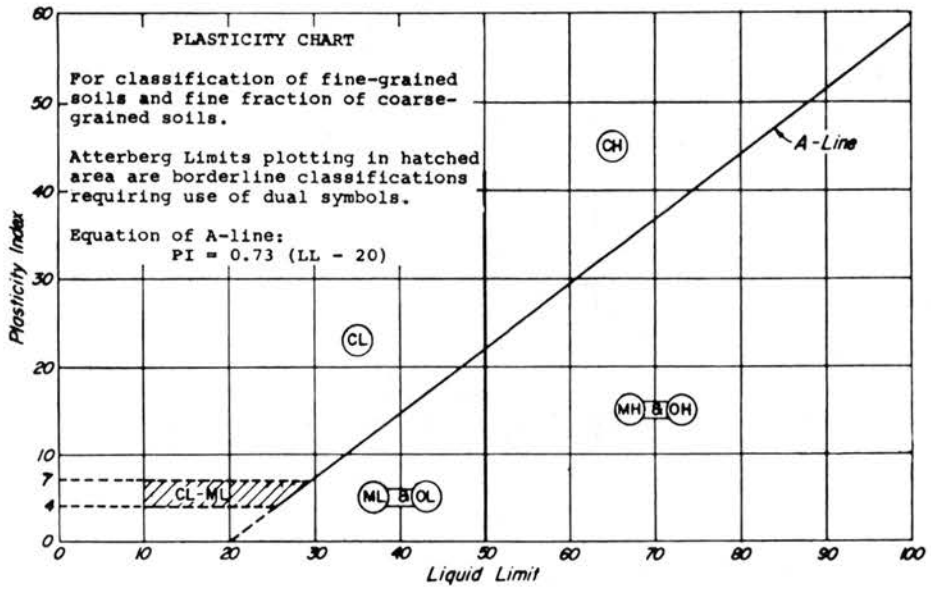

Visual-Manual Identification, See ASTM Designation D 2488.

FIG. 1—*Continued.*

in which D_{10}, D_{30}, and D_{60} are the particle-size diameters corresponding respectively to 10, 30, and 60 per cent passing on the cumulative particle-size distribution curve.

6.5.1 Classify the sample as *well-graded gravel*, GW or *well-graded sand*, SW, if C_u is greater than 4 for gravel and 6 for sand, and C_z is between 1 and 3.

6.5.2 Classify the sample as *poorly graded gravel*, GP, or *poorly graded sand*, SP, if either the C_u or the C_z criteria for well-graded soils are not satisfied.

6.6 If more than 12 per cent of the test sample passed the No. 200 sieve as determined in 5.1.1 determine the liquid limit and the plasticity index of a portion of the test sample passing the No. 40 sieve in accordance with ASTM Method D 423 and ASTM Method D 424.

6.6.1 Classify the sample as *silty gravel*, GM, or *silty sand*, SM if the results of the limits tests show that the fines are silty, that is, the plot of the liquid limit versus plasticity index falls below the "A" line (see Plasticity Chart, Fig. 1) or the plasticity index is less than 4.

6.6.2 Classify the sample as *clayey gravel*, GC, or *clayey sand*, SC, if the fines are clayey, that is, the plot of liquid limit versus plasticity index falls above the "A" line and the plasticity index is greater than 7.

6.6.3 If the fines are intermediate between silt and clay, that is, the plot of liquid limit versus plasticity index falls on or practically on the "A" line or falls above the "A" line but the plasticity index is in the range of 4 to 7, the soil should be given a borderline classification, such as GM-GC or SM-SC.

6.7 If 5 to 12 per cent of the test sample passed the No. 200 sieve, the soil should be given a borderline classification based on both its gradation and limit test characteristics, (see 6.6) such as GW-GC or SP-SM.

NOTE 5—In doubtful cases, the rule is to favor the less plastic classification. Example: a gravel with 10 per cent fines, a C_u of 20, a C_z of 2.0, and a plasticity index of 6 would be classified as GW-GM rather than GW-GC.

7. Procedure for Classification of Fine-Grained Soils (50 per cent or more passing No. 200 sieve)

7.1 From the material passing the 3-in. (76-mm) sieve, select a test sample for the determination of the liquid limit and plasticity index in accordance with ASTM Method D 421 or ASTM Method D 2217.

NOTE 6—It is recommended that the method for wet preparation be used for soils containing organic matter or irreversible mineral colloids.

7.2 Determine the liquid limit and the plasticity index of a portion of the test sample passing the No. 40 sieve in accordance with ASTM Method D 423, and ASTM Method D424.

7.3 Classify the soil as *inorganic clay*, C, if the plot of liquid limit versus plasticity index falls above the "A" line and the plasticity index is greater than 7.

7.3.1 Classify the soil as *inorganic clay of low to medium plasticity*, CL, if the liquid limit is less than 50 and the plot of liquid limit versus plasticity index falls above the "A"-line and the plasticity index is greater than 7. See area identified as CL on the Plasticity Chart, Fig. 1.

7.3.2 Classify the soil as *inorganic clay of high plasticity*, CH, if the liquid limit is greater than 50 and the plot of liquid limit versus plasticity index falls above the "A"-line. See area identified as CH on the Plasticity Chart, Fig. 1.

NOTE 7—In cases where the liquid limit exceeds 100 or the plasticity index exceeds 60, the plasticity chart may be expanded by maintaining the same scales on both axes and extending the A-line at the indicated slope.

7.4 Classify the soil as *inorganic silt*, M, if the plot of liquid limit versus plas-

ticity index falls below the "A" line or if the plasticity index is less than 4, unless it is suspected that organic matter is present in sufficient amounts to influence the soil properties, then tentatively classify the soil as *organic silt or clay*, O.

7.4.1 If the soil has a dark color and an organic odor when moist and warm, a second liquid limit test should be performed on a test sample which has been oven-dried at 110 ± 5 deg C for 24 hr.

7.4.2 Classify the soil as *organic silt or clay*, O, if the liquid limit after oven drying is less than three-fourths of the liquid limit of the original sample determined before drying. (See ASTM Designation D 2217, Procedure B).

7.4.3 Classify the soil as *inorganic silt of low plasticity*, ML, or as *organic silt or silt-clay of low plasticity*, OL, if the liquid limit is less than 50 and the plot of liquid limit versus plasticity index falls below the "A"-line or the plasticity index is less than 4. See area identified as ML and OL on the Plasticity Chart, Fig. 1.

7.4.4 Classify the soil as *inorganic silt of medium to high plasticity*, MH, or as *organic clay or silt-clay of medium to high plasticity*, OH, if the liquid limit is more than 50 and the plot of liquid limit versus plasticity index falls below the "A"-line. See area identified as MH and OH on the Plasticity Chart, Fig. 1.

7.5 In order to indicate their borderline characteristics, some fine-grained soils should be classified by dual symbols.

7.5.1 If the plot of liquid limit versus plasticity index falls on or practically on the "A" line or above the "A" line where the plasticity index is in the range of 4 to 7, the soil should be given an appropriate borderline classification such as CL-ML or CH-OH.

7.5.2 If the plot of liquid limit versus plasticity index falls on or practically on the line liquid limit = 50, the soil should be given an appropriate borderline classification such as CL-CH or ML-MH.

NOTE 8—In doubtful cases, the rule for classification is to favor the more plastic classification. Example: a fine-grained soil with a liquid limit of 50 and a plasticity index of 22 would be classified as CH-MH rather than CL-ML.

Appendix F

AMERICAN SOCIETY FOR TESTING AND MATERIALS

1916 Race St., Philadelphia, Pa. 19103

Reprinted from the Annual Book of ASTM Standards Copyright ASTM

Recommended Practice for

THIS

DESCRIPTION OF SOILS[1] (VISUAL-MANUAL PROCEDURE)



ASTM Designation: D 2488 – 69

This Recommended Practice of the American Society for Testing and Materials is issued under the fixed designation D 2488; the number immediately following the designation indicates the year of original adoption or, in the case of revision, the year of last revision. A number in parentheses indicates the year of last reapproval.

1. Scope

1.1 This recommended practice describes a procedure for the identification and description of soils for engineering purposes based on visual examination and simple manual tests.

NOTE 1—It does not conflict with other methods of soil identification or classification and in fact the user is encouraged to supplement the descriptions recommended herein with geologic, pedologic or local terms of description. On the other hand, when precise classification of soils for engineering purposes are required ASTM Method D 2487, for Classification of Soils for Engineering Purposes,[2] should be employed.

1.2 This recommended practice is intended to be used not only for identification of soils in the field but also in the office or in the laboratory or wherever soil samples are inspected and described.

1.2.1 The practice has particular value in grouping similar soil samples so that only a minimum number of laboratory tests need be run for positive soil classification.

NOTE 2—The ability to identify soils correctly is learned more readily under the guidance of experienced personnel, but it may also be acquired systematically by comparing numerical laboratory test results for typical soils of each type with their visual and manual characteristics while performing the identification procedures.

2. Definitions and Description of Terms

2.1 The definitions of the soil components, boulders, cobbles, gravel, sand fines (silt and clay), organic soil, and peat are in accordance with ASTM Definitions D 653, Terms and Symbols Relating to Soil Mechanics.[2]

3. Equipment

3.1 *Required Equipment:*

3.1.1 Small supply of water and

3.1.2 Pocket knife or small spatula.

3.2 *Useful Auxiliary Equipment:*

3.2.1 Small bottle of dilute hydrochloric acid,

3.2.2 Small test tube and stopper,

3.2.3 Munsell Soil Color Chart or Rock Color Chart,

[1] Under the standardization procedure of the Society, this recommended practice is under the jurisdiction of the ASTM Committee D-18 on Soil and Rock for Engineering Purposes. A list of members may be found in the ASTM Year Book.

Current edition effective Dec. 19. 1969. Originally issued 1966. Replaces D 2488 – 66 T.

[2] *Annual Book of ASTM Standards,* Part 11.

3.2.4 Small hand lens, and

3.2.5 Pocket penetrometer or shear gauge.

4. Sampling

4.1 The sample shall be considered to be representative of the stratum from which it was obtained by an appropriate accepted or standard procedure.

NOTE 3—Preferably the sampling procedure should be identified as having been conducted in accordance with ASTM Method D 1452, for Soil Investigation and Sampling by Auger Borings,[2] ASTM Method D 1586, for Penetration Test and Split-Barrel Sampling of Soils,[2] ASTM Method D 1587 for Thin-Walled Tube Sampling of Soils,[2] etc.

4.2 The sample shall be carefully identified as to origin.

NOTE 4—The sample identification may take the form of a boring number and sample number in conjunction with a job number, a geologic stratum, a pedologic horizon or a location description with respect to a permanent monument, a grid system or a station number and offset with respect to a stated centerline.

5. General Procedure for Identification

5.1 On the basis of an examination of the characteristics of the particles which make up a soil sample it is possible to assign it to one of three primary groups. Although most soils have components representative of two or more groups it is usually possible to discern the most important component and assign the sample to that group. A most important distinction is made on the basis of size. Individual particles visible to the naked eye make up the *coarse* fraction and those too small to be seen individually make up the *fine* fraction or the *fines*. The *organic* component of soils may consist of undecayed or partially decayed twigs, leaves, needles, stems, roots, etc. which impart a woody or fibrous texture to the soil or it may also be so finely divided that it can only be identified by its dark brown, dark gray or black color and distinctive organic odor.

5.1.1 *Coarse-grained soils* are those in which more than half (by weight) of the particles are visible to the naked eye. In making this estimate, particles coarser than 3 in. (76 mm) in diameter should be excluded. However, where such very coarse particles can be observed in surface soils or in exposure in the walls of test pits an estimate of the percentage of a large volume of soil which is occupied by cobbles and boulders should be made. This percentage should be recorded independently of the description of the material smaller than 3 in. (76 mm) in diameter.

5.1.2 *Fine-grained soils* are those in which more than half (by weight) of the particles are so fine that they cannot be seen by the naked eye. They are partly subdivided on the basis of simple manual tests. They are also subidivded as *inorganic* or *organic* on the basis of the presence or absence of a significant quantity of organic matter. Inorganic soils are usually characterized by their bright or light colors.

5.1.3 *Organic soils* are those which contain significant quantities of organic matter. *Highly organic soils* can readily be recognized by the presence of decayed roots, leaves, grasses and other fibrous vegetable matter in various stages of decay. When moist, they have a dark brown, very dark gray or black color and a soft spongy feel. If the samples are fresh, a distinctive odor of rotting organic matter can usually be noted. Many soils are only *partly organic* and are in fact composed predominantly of inorganic material. Such soils, however, behave differently from typical inorganic soils and the presence of relatively small amounts of organic matter should be noted wherever possible. Any soil which has a dark brown, dark gray or black color probably contains some finely divided organic material. The identification as an organic soil can usually be

completed by carefully noting the organic odor of fresh samples. If the sample is dry it should be moistened and warmed in the hand which may help to bring out the distinctive odor.

5.1.4 *Mixed-grained soils* are those inorganic or partly organic soils which contain materials representative of both the coarse and fine soil fractions. A high percentage of natural soils are mixed-grained. In many of these, however, one fraction predominates to such an extent that for practical purposes the soil may be identified as that fraction and the presence of the other noted as an appropriate fraction. As nearly as possible, the relative proportion of coarse and fine fraction should be estimated for all mixed-grained soils.

5.2 *Color* is an important property in identifying organic soils and within a given locality it may also be useful in identifying materials of similar geologic origin. Although qualitative color names are somewhat helpful, positive color identifications obtained by comparison with a standard color chart are even more useful. If the sample contains layers or patches of varying colors, this should be noted and all representative colors should be described. If possible, color should be described for moist samples.

NOTE 5—Charts especially prepared for describing the colors of soil and rock are available respectively. Such charts give typical descriptive names for the color chips and the correct Munsell color notation in terms of hue, value and chroma. Example: *Pink* (Moderate orange pink), *5 YR 8/4.*

5.3 Soils containing a significant amount of organic material usually have a distinctive odor of decaying vegetation This is especially apparent in fresh samples, but if the samples are dried the odor may often be revived by heating a moistened sample. If the soil is dark colored, the odor should be described as *organic*, *earthy*, or *none.*

5.4 Whenever intact samples are described an estimate of the *moisture condition* should be noted. *Dry* materials require the addition of considerable moisture to attain optimum for compaction. *Moist* materials are near the optimum moisture content. *Wet* soils require drying to attain optimum moisture content and *saturated* (very wet) soils come from below the water table.

TABLE 1—IDENTIFICATION OF CONSISTENCY OF FINE-GRAINED SOILS FROM MANUAL TESTS.

Consistency	Identification Procedure	Shear Strength, tons/ft² or kg/cm²
Soft	Easily penetrated several inches by thumb	Less than 0.25
Firm (medium)	Penetrated several inches by thumb with moderate effort	0.25 to 0.50
Stiff	Readily indented by thumb, but penetrated only with great effort	0.50 to 1.00
Very stiff	Readily indented by thumb nail	1.00 to 2.00
Hard	Indented with difficulty by thumbnail	over 2.00

5.5 The *structural* characteristics of intact soil samples provide important clues to their performance as foundation materials. Whenever such samples are available or when the soil profile may be inspected during sampling from a pit, the structural characteristics should be described. *Stratified* materials consist of alternating layers of varying types (or color). If the layers are less than about $\frac{1}{4}$ in. (6 mm) thick, it may be described as *laminated* (or *varved*, if mostly fine-grained). *Fissured* materials break along definite planes of fracture with little

resistance to fracturing. If the fracture planes appear polished or glossy, they should be described as *slickensided*. If a cohesive soil can be easily broken into small angular lumps which resist further breakdown, the structure may be described as *blocky*. A *lensed* structure is indicated by the inclusion of small pockets of different texture, such as small lenses of sand scattered through a mass of clay. The presence of special structural characteristics such as *root holes*, or *porous* openings should also be noted. If no structural characteristics are apparent, the soil may be described as *nonstratified* or *homogeneous*.

5.6 Some soils show definite evidence of *cementation* in the intact state. Where this is noted, the degree of cementation may be described as *weak* or *strong*. Since calcium carbonate is the most common cementing agent a report of its presence on the basis of the reaction with dilute hydrochloric acid is important. The intensity of the HCl reaction should be described as *none*, *weak*, or *strong*.

5.7 The degree of compactness or natural density of cohesionless soils and the consistency of cohesive soils are also important in foundation problems. Whenever undisturbed materials are examined either in field pits or from sealed samples, estimates of these properties should be noted. Usually the process of sampling disturbs cohesionless soils to such an extent that the natural density may only be determined in place. In *dense* cohesionless soil it is difficult to drive a 2 by 2 in. (5 by 5 cm) wooden stake more than a few inches; however, such a stake can easily be driven into *loose* material. Obviously, this simple method cannot be used to determine the relative density of *cemented* soils.

5.7.1 The consistency of cohesive soils may be determined in place or on

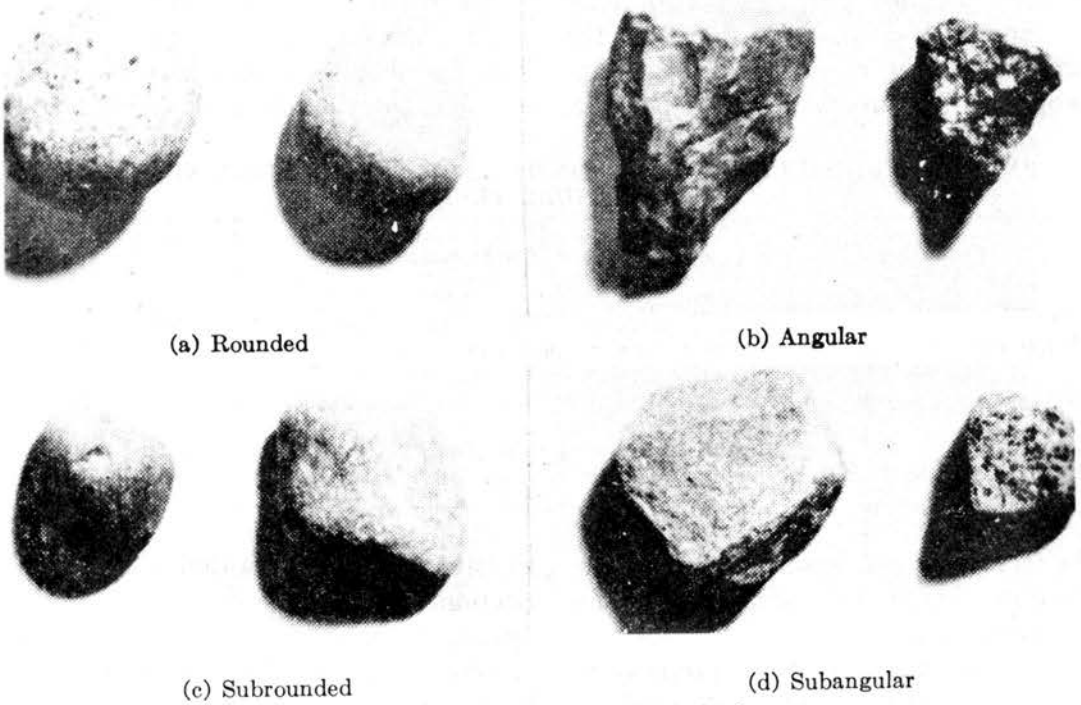

(a) Rounded (b) Angular

(c) Subrounded (d) Subangular

FIG. 1—Typical Shapes of Bulky Grains.

undisturbed samples in accordance with the identification procedure given in Table 1. The quantitative measure of the shear strength is given as a basis for correlation with values obtained from pocket penetrometers or shear gauges, which are often used to estimate consistency.

5.8 It is often desirable to add an estimate of the classification of the soil in accordance with the groups used for engineering classification (Fig. 1 of ASTM Method D 2487[2]). The group symbol should be placed in parentheses at the end of the description in order to indicate that the classification has been estimated.

Nominal Maximum Diameter	Minimum Sample Size
2–2½ in. (50–65 mm)	8 lb (3.6 kg)
1–1½ in. (25–38 mm)	4 lb (1.8 kg)
¼–½ in. (6–12 mm)	1 lb (0.45 kg)
less than ⅛ in. (3 mm)	¼ lb (0.11 kg)

TABLE 2—CHECK LIST FOR DESCRIPTION OF COARSE-GRAINED SOILS.

1. *Typical Name* Boulders Cobbles Gravel Sand
   Add descriptive adjectives for minor constituents.
2. *Gradation* Well graded Poorly graded (Uniformly graded or Gap-graded)
   Describe range of particle sizes or predominant size or sizes as coarse, medium, or fine sand or gravel.
3. *Maximum Particle Size* Note per cent boulders and cobbles
4. *Size Distribution* Approximate per cent gravel, sand and fines in fraction finer than 3 in. (76 mm). Indicate plasticity of fines (See 7.5).
5. *Grain Shape* Angular Subangular Subrounded Rounded
6. *Mineralogy* Rock type for gravel, predominant minerals in sand.
   Note especially presence of mica flakes, shaly particles and organic material.
7. *Color* Use Munsell notation, if possible
8. *Odor* None Earthy Organic
   May be neglected except for dark colored soils.
9. *Moisture content* Dry Moist Wet Saturated
10. *Natural Density* Loose Dense
11. *Structure* Stratified Lensed Nonstratified
12. *Cementation* Weak Strong
    Note reaction with HCl as none, weak or strong.
13. *Local or Geologic Name*
14. *Group Symbol* Estimate if desired. See Classification Chart, Fig. 1, ASTM Designation D 2487.

6. Procedure for Coarse-Grained Soils

6.1 Select a representative sample of the soil material finer than 3 in. (76 mm) sieve, spread it out for examination and follow identification procedures.

6.1.1 For accurate identification, the minimum amounts of sample should be in accordance with the following schedule:

6.2 Estimate the percentage of the coarse fraction larger than the No. 4 sieve (about ¼ in. or 5 mm).

6.2.1 Identify the soil as *gravel* if 50 per cent or more is larger.

6.2.2 Identify the soil as *sand* if less than 50 per cent is larger.

6.3 Estimate the percentage of fines.

6.3.1 Identify the soil as *clean gravel* or *clean sand* if the fines content is about 5 per cent or less.

6.3.1.1 Identify the soil as *well graded* if it has a wide range in grain size and substantial amounts of most intermediate particle sizes.

6.3.1.2 Identify the soil as *poorly graded* if it consists predominantly of one size (*uniformly graded*) or has a wide range of sizes with some intermediate sizes obviously missing (*gap-graded*).

6.3.2 Identify the soil as *gravel with fines* or *sand with fines* if the fines content is more than about 12 per cent.

6.3.2.1 Identify the soil as borderline *clean* to *with fines* if the fines content is between about 5 and 12 per cent.

6.3.2.2 Describe the fines as *silty* or *clayey* in accordance with identification procedures given under fine-grained soils.

6.4 Describe the grain shape of the sand and gravel portions of the coarse fraction as *angular*, *subangular*, *subrounded*, or *rounded*, (see Fig. 1).

6.4.1 *Angular* particles have sharp edges and relatively plane sides with unpolished surfaces.

6.4.2 *Subangular* particles are similar to angular but have somewhat rounded edges.

6.4.3 *Subrounded* particles exhibit nearly plane sides but have well-rounded corners and edges.

6.4.4 *Rounded* particles have smoothly curved sides and no edges.

6.5 Add appropriate descriptive notes regarding maximum size, size distribution, per cent cobbles and boulders, mineralogy, color, odor, moisture condition, natural density, structure, cementation, local or geologic name, and group symbol. Follow check list, Table 2.

NOTE 6—A complete description of a river valley sample estimated to contain about 20 per cent gravel, 65 per cent sand and 15 per cent silt could take the form of this example: *Silty Sand* well-graded gravelly. Maximum size, 8 in. (203 mm), about 5 per cent cobbles. About 20 per cent subrounded igneous gravel, 65 per cent subrounded to subangular quartz sand, and 15 per cent low plasticity fines. Light brown (7.5 YR 6/4). Moist. Dense. Stratified. No reaction to HCl. Alluvial sand (SM).

7. Procedure for Fine-Grained and Organic Soils

7.1 Select a representative sample of the material for examination. See 6.1.1.

7.2 Describe the color of the moist soil.

7.3 Describe the odor of the moist soil (warming if necessary to intensify the odor).

7.4 Identify the soil as *organic* if it has a black, dark brown or dark gray color (Munsell value 4 or less, chroma 3 or less) and a distinctive organic odor.

TABLE 3—IDENTIFICATION OF FINE-GRAINED SOIL FRACTIONS FROM MANUAL TESTS.

Typical Name	Dry Strength	Dilatancy Reaction	Toughness of Plastic Thread	Plasticity[a] Description
Sandy Silt	None—Very Low	Rapid	Weak—Soft	None—Slight
Silt	Very Low—Low	Rapid	Weak—Soft	None—Slight
Clayey Silt	Low—Medium	Rapid—Slow	Medium Stiff	Slight—Medium
Sandy Clay	Low—High	Slow—None	Medium Stiff	Slight—Medium
Silty Clay	Medium—High	Slow—None	Medium Stiff	Slight—Medium
Clay	High—Very High	None	Very Stiff	High
Organic Silt	Low—Medium	Slow	Weak—Soft	Slight
Organic Clay	Medium—Very High	None	Medium Stiff	Medium—High

[a] The term low may be substituted for slight in the description of plasticity.

7.4.1 Identify the soil as *highly organic* if it has predominantly a woody or fibrous texture resulting from a composition of partially decayed leaves, twigs, needles, stems, roots, etc. Further identification is unnecessary.

7.4.2 Identify the soil as *partly organic* if it does not have a fibrous texture and appears to be predominantly mineral in character. Proceed with identification procedure for fine-grained soils.

7.5 From the representative sample, select enough material to provide two cubes approximately $\frac{1}{2}$ in. (13 mm) in size after the gravel and coarse sand fraction has been removed. Use these

samples to perform the dry strength, dilatancy and plasticity tests.

7.5.1 *Dry Strength*—Mold one of the samples until it has the consistency of putty, adding a small amount of water if necessary, and form into a cube or ball. Allow the sample to dry completely in the sun, air or oven at a temperature not exceeding 110 C. Test the strength of the dry sample by crushing between the fingers.

NOTE 7—If the soil sample contains dry lumps, an experienced operator can determine the dry strength without preparing a pat for this particular purpose. The process of molding and drying usually produces higher strengths than are found in natural aggregates of soil. The presence of high-strength water-soluble cementing materials, such as calcium carbonates, may cause exceptionally high dry strengths but this can usually be detected from the intensity of the reaction with dilute hydrochloric acid (see 5.6).

7.5.1.1 Describe as *very low* or *none* if the dry sample crumbles with the mere pressure of handling.

7.5.1.2 Describe as *low* if the dry sample crumbles to powder with little finger pressure.

7.5.1.3 Describe as *medium* if considerable finger pressure is required to powder the sample. Usually, when the soil has medium dry strength a smear of powder can be easily rubbed off the smooth surface of the sample.

7.5.1.4 Describe as *high* if the sample cannot be crushed to powder by finger pressure, even though it may be broken. Usually, when the sample has high dry strength it is not even possible to rub off a smear of powder from a smooth surface of the dry sample.

7.5.1.5 Describe as *very high* if the sample cannot be broken between the thumb and a hard surface.

7.5.2 *Dilatancy*—Add sufficient water, if necessary, to the other one of the samples to produce a soft, but not sticky, consistency. Smooth the soil pat in the palm of one hand with the blade of a knife or small spatula, shake horizontally, and strike the back of the hand vigorously against the other hand several times. Note reaction. Squeeze the sample by closing the hand and note reaction.

7.5.2.1 Describe the reaction as *rapid* if water appears on the surface during shaking and disappears quickly upon squeezing. The presence or absence of the free water can be noted by the shiny or dull appearance of the surface.

7.5.2.2 Describe the reaction as *slow* if vigorous tapping is required to bring water to the surface and squeezing causes little change in appearance.

7.5.2.3 Describe the reaction as *none* if the test produces no visible change in the sample.

7.5.3 *Plastic Thread*—Following the completion of the dilatancy test the sample is shaped into an elongated pat and rolled by hand on a smooth surface or between the palms into a thread about $\frac{1}{8}$ in. (3 mm) in diameter. (If the sample is too wet to roll easily it should be spread out into a thin layer and allowed to lose some water by evaporation.) Fold the sample threads and reroll repeatedly until the thread crumbles at a diameter of about $\frac{1}{8}$ in. (3 mm). The thread will crumble near the *plastic limit*. Note the pressure required to roll out the thread especially near the plastic limit; also note the strength of the thread. After the thread crumbles, the pieces should be lumped together and kneaded until the lump crumbles. Note the toughness of the material during kneading.

7.5.3.1 Describe the thread as *weak and soft* if, near the plastic limit, only slight pressure is required to roll it, the thread has little or no strength and after crumbling the thread pieces cannot be formed into a coherent mass.

7.5.3.2 Describe the thread as *medium stiff* if, near the plastic limit, medium

pressure is required to roll it, the thread will support its own weight when a few inches long, and after crumbling the thread pieces can be molded into a lump which crumbles with slight kneading.

7.5.3.3 Describe the thread as *very stiff* if, near the plastic limit, considerable pressure is required to roll it, the thread will easily support its own weight when several inches long, and after crumbling the thread pieces can be molded into a lump which is coherent and tough.

7.6.1 *Sandy silt* has very low dry strength or none, a reaction to the dilatancy test of rapid, a plastic thread which is weak and soft, and a significant sand content which can be noted by a gritty feel. It can be described as having slight plasticity or none.

7.6.2 *Silt* has very low to low dry strength, a reaction to the dilatancy test of rapid, and a plastic thread which is weak and soft. It can be described as having slight plasticity or none.

TABLE 4—CHECK LIST FOR DESCRIPTION OF FINE-GRAINED AND PARTLY-ORGANIC SOILS.

1. *Typical Name*	Sandy Silt, Silty Clay, Silt, Clay, Clayey Silt, Organic Silt, Sandy Clay, Organic Clay
2. *Maximum Particle Size*	Note percentage of boulders and cobbles
3. *Size Distribution*	Approximate per cent gravel, sand and fines in fraction finer than 3 in. (76 mm)
4. *Dry Strength*	None, Very Low, Low, Medium, High, Very High
5. *Dilatancy*	None, Slow, Rapid
6. *Plastic Thread*	Weak and Soft, Medium Stiff, Very Stiff
7. *Plasticity of Fines*	None, Slight (low), Medium, High
8. *Color*	Use Munsell notation, if possible. Note presence of mottling or banding.
9. *Odor*	None, Earthy, Organic. May be neglected except for dark-colored soils.
10. *Moisture Content*	Dry, Moist, Wet, Saturated
11. *Consistency*	Soft, Firm (Medium), Stiff, Very Stiff, Hard
12. *Structure*	Stratified, Laminated (Varved), Fissured, Slickensided, Blocky, Lensed, Homogeneous (Nonstratified)
13. *Cementation*	Weak, Strong. Note reaction with dilute hydrochloric acid as none, weak or strong.
14. *Local or Geologic Name*	
15. *Group Symbol*	Estimate if desired. See Classification Chart, Fig. 1, ASTM Method D 2487

7.5.4 *Plasticity*—On the basis of its dry strength, dilatancy and toughness describe the overall plasticity as shown in Table 3.

7.6 Identify the soil as *silt* or *clay* with appropriate adjectives. See Table 3.

NOTE 8—The relative percentage of coarse and fine-grained material may be estimated by thoroughly shaking a mixture of soil and water in a test tube and then allowing the mixture to settle. The coarse particles will fall to the bottom and successively finer particles will be deposited with increasing time; the sand sizes will fall out of suspension in 20 to 30 sec. The relative proportions can be estimated from the relative volume of each size separate.

7.6.3 *Clayey silt* has low to medium dry strength, a reaction to the dilatancy test of rapid to slow, and a medium stiff plastic thread. It can be described as having slight or medium plasticity.

7.6.4. *Sandy clay* has low to high dry strength, a reaction to the dilatancy test of slow to none, and a medium stiff plastic thread which may break prematurely because of the presence of sand grains. It can be described as having slight or medium plasticity.

7.6.5 *Silty clay* has medium to high dry strength, a reaction to the dilatancy test of very slow to none, and a medium

stiff plastic thread. It can be described as having slight or medium plasticity.

7.6.6 *Clay* has a high to very high dry strength, no reaction to the dilatancy test and a very stiff plastic thread. It can be described as having high plasticity.

7.6.7 *Organic silt* has low to medium dry strength, a slow reaction to dilatancy test, and a weak and soft plastic thread It can be described as having slight plasticity.

7.6.8 *Organic clay* has medium to very high dry strength, a reaction to the dilatancy test of very slow to none, and a medium stiff plastic thread. It can be described as having medium or high plasticity.

7.7 Add appropriate descriptive notes regarding maximum size, size distribution, per cent cobbles and boulders, plasticity of fines, color, odor, moisture condition, consistency, structure, cementation, local or geologic name and group symbol. Follow check list, Table 4.

NOTE 9—A complete description of an undisturbed sample of a windblown silt could take the form of this example: *Clayey silt*, some fine sand. Maximum size about 0.1 mm. About 10 per cent fine sand, 90 per cent slightly plastic fines. Yellowish brown (10 YR 5/6 dry). Dry. Firm. Nonstratified, but with numerous vertical root holes. Strong reaction to HCl. Loess (ML).

KEY: Existing rules are printed in standard type face. Proposed additions to existing rules are printed in **boldface**, while proposed deletions from existing rules are printed within [single brackets]. Additions to proposed rules are **underlined and boldfaced**, while deletions from proposed rules are printed within [[double brackets]].

Appendix G



NACE Standard TM-01-69

Test Method

Laboratory Corrosion Testing of Metals for the Process Industries

Approved March, 1969
National Association of Corrosion Engineers
2400 West Loop South
Houston, Texas 77027
713/622-8980

The National Association of Corrosion Engineers issues this Standard in conformity to the best current technology regarding the specific subject. This Standard represents minimum requirements and should in no way be interpreted as a restriction on the use of better procedures or materials. Neither is this Standard intended to apply in any and all cases relating to the subject. Numerous external factors may negate the usefulness of this Standard in specific instances.

This Standard may be used in whole or in part by any party without prejudice if recognition of the source is included. The National Association of Corrosion Engineers assumes no responsibility for the interpretation or use of this Standard.

Nothing contained in this Standard of the National Association of Corrosion Engineers is to be construed as granting any right, by implication or otherwise, for manufacture, sale, or use in connection with any method, apparatus, or product covered by Letters Patent, nor as indemnifying or protecting anyone against liability for infringement of Letters Patent.

Foreword

Unit Committee T-5A ("Corrosion in Chemical Processes") of the National Association of Corrosion Engineers issues this Standard with a dual purpose.

The first purpose is to standardize, as much as possible, simple immersion corrosion studies. In this sense, this Standard is reasonable and effective without imposing inflexible requirements as to apparatus, conditions or techniques. The actual conditions of test will be determined by the problem at hand and limited only by the ingenuity of the individual investigator.

The second purpose of this Standard is to present to the user a consensus on the best current technology in this field of laboratory corrosion testing. As such, this Standard enumerates and discusses the many factors which must be considered, controlled, and reported in order to aid in correlation or reproducibility of such studies.

The techniques described permit the investigator to reproduce to a considerable extent in the laboratory, through judicious experimental design, the process conditions which govern corrosion mechanisms. The tests are not to be construed as "accelerated" tests, which are generally unreliable. The methods described are also applicable to materials qualification tests for quality control. However, the latter require more rigid definition of apparatus, conditions, and technique.

The ultimate purpose is better correlation of results in the future and the reduction of conflicting reports through a more detailed recording of meaningful factors and conditions.

TEST METHOD

Laboratory Corrosion Testing of Metals for the Process Industries

CONTENTS

1. General 2

2. Specimen Preparation 2

3. Equipment and Apparatus 3

4. Test Conditions 4

5. Methods of Cleaning Specimens After the Test 7

6. Evaluation of Results 8

7. Calculating Corrosion Rates 9

8. Reporting the Data 10

References 10

1. General

1.1 This Standard describes the factors which influence laboratory tests. These factors include specimen preparation, apparatus, test conditions (solution composition, temperature, velocity, aeration, volume, method of supporting specimens, duration of test), methods of cleaning specimens, evaluation of results, and calculation of corrosion rates. This Standard also emphasizes the importance of recording all pertinent data and provides a check list for reporting test data.

1.2 Experience has shown that all metals and alloys do not respond alike to the many factors that control corrosion and that "accelerated" corrosion tests give indicative results only. Consequently, it is impractical to propose an inflexible standard laboratory corrosion testing procedure for general use except for material qualification tests, where standardization is obviously required.

1.3 In designing any corrosion test, consideration must be given to the various factors discussed in this test method because these factors have been found to affect greatly the results obtained.

2. Specimen Preparation

2.1 In laboratory tests, corrosion rates of duplicate specimens are usually within ± 10% under the same test conditions. Occasional exceptions, in which a large difference is observed, can occur under conditions of borderline passivity of metals or alloys that depend on a passive film for their resistance to corrosion. Therefore, at least duplicate specimens should be exposed in each test.

2.2 If the effects of corrosion are to be determined by changes in mechanical properties, untested duplicate specimens should be preserved in a non-corrosive environment for comparison with the corroded specimens. The mechanical property commonly used for comparison is the tensile strength. The procedure for determining this value is shown in detail in ASTM Standard E-8-66.

2.3 The size and the shape of specimens will vary with the purpose of the test, nature of the materials, and apparatus used. A large surface-to-mass ratio and a small ratio of edge area to total area are desirable. These ratios can be achieved through the use of square or circular specimens of minimum thickness. Circular specimens should be cut preferably from sheet and not bar stock to minimize the exposed end grain.

2.3.1 A circular specimen of about 1 1/2-inch diameter is a convenient shape for laboratory corrosion tests. With a thickness of approximately 1/8 inch and a 5/16 or 7/16-inch diameter hole for mounting, these specimens will readily pass through a 45/50 ground glass joint of a distillation kettle. The total surface area of a circular specimen is given by the following equation:

$$A = \frac{\pi}{2} (D^2 - d^2) + t\pi D + t\pi d$$

where t = thickness, D = diameter of the specimen, and d = diameter of the mounting hole. If the hole is completely covered by the mounting support, the last term ($t\pi d$) in the equation is omitted.

2.3.2 Strip coupons (2 x 1 x 1/16 or 1/8 inch) may be preferred as corrosion specimens, particularly if interface or liquid line effects are to be studied by the laboratory test, but such effects are beyond the scope of this Standard.

2.3.3 All specimens should be measured carefully to permit accurate calculation of the exposed areas. An area calculation accurate to plus or minus 1% is usually adequate.

2.4 More uniform results may be expected if a substantial layer of metal is removed from the specimens to eliminate variations in condition of the original metallic surface. This can be done either by chemical treatment (pickling), electrolytic removal, or by grinding with a coarse abrasive paper or cloth, such as No. 50, using care not to work harden the surface (see Section 2.7). At least 0.0001 inch or 10 to 15 milligrams per square inch should be removed. If clad alloy specimens are to be used, special attention must be given to insure that excessive metal is not removed. After final preparation of the specimen surface, the specimens should be stored in a desiccator until exposure if they are not used immediately.

2.5 Exposure of sheared edges should be avoided unless the purpose of the test is to study effects of the shearing operation. It may be desirable to test a surface representative of the material and metallurgical condition used in practice.

2.6 The specimen can be stamped with an appropriate identifying mark.

2.6.1 The stamp, besides identifying the specimen, introduces stresses and cold work in the specimen, that could be responsible for localized corrosion and/or stress corrosion cracking.

2.6.2 Stress corrosion cracking at the identifying mark is a positive indication of susceptibility to such

corrosion; however, the absence of cracking should not be interpreted as indicating resistance. Additional tests should be run to study specifically the effects of stress.

2.7 Final surface treatment of the specimens should include finishing with No. 120 abrasive paper or cloth, or the equivalent, unless the surface is to be used in the mill-finished condition. This resurfacing may cause some surface work-hardening to an extent which will be determined by the vigor of the surfacing operation but is not ordinarily significant.

2.7.1 Coupons of different alloy compositions should never be ground on the same cloth.

2.7.2 Wet grinding should be used on alloys which work harden quickly, such as the austenitic stainless steels.

2.8 The specimens should be finally degreased by scrubbing with bleach-free scouring powder, followed by thorough rinsing in water and in a suitable solvent (such as acetone, methanol, or a mixture of 50% methanol and 50% ether) and air dried. For relatively soft metals such as aluminum, magnesium, and copper, scrubbing with abrasive powder is not always needed and can mar the surface of the specimen. The use of towels for drying may introduce an error through contamination of the specimens with grease or lint.

2.9 The dried specimens should be weighed on an analytical balance to an accuracy of plus or minus 0.5 milligram.

2.10 The method of specimen preparation should be described when reporting tests results to facilitate interpretation of data by other persons.

2.10.1 Reports should include trade name or composition of specimens in the following order of preference: (a) chemical composition determined by analysis, (b) approximate or nominal chemical composition, and (c) trade name or grade and specification (if bought to MIL, ASTM, etc.)

2.10.2 Metallurgical condition of the specimens including the degree of hot or cold working and heat treatment, should be described as completely as possible.

2.11 The use of welded specimens is often desirable because some welds may be cathodic or anodic to the base metal and may affect the corrosion.

2.11.1 The heat-affected zone is also of importance but should be studied separately because welds on coupons do not faithfully reproduce heat input or size effects of full-size vessels.

2.11.2 Corrosion of a welded coupon is best reported by description and thickness measurements rather than a mils-per-year rate because the attack is normally localized and not representative of the entire surface.

2.11.3 A complete discussion of corrosion testing of welded coupons or the effect of heat treatment on the corrosion resistance of a metal is not within the scope of this Standard.

3. Equipment and Apparatus

3.1 A versatile and convenient apparatus should be used, consisting of a kettle or flask of suitable size (usually 500 to 5000 milliliters), a reflux condenser with atmospheric seal, a sparger for controlling atmosphere or aeration, a thermowell and temperature regulating device, a heating device (mantle, hot plate, or bath), and a specimen support system. If agitation is required, the apparatus can be modified to accept a suitable stirring mechanism such as a magnetic stirrer. A typical resin flask set up for this type test is shown in Figure 1.

3.2 These suggested components can be modified, simplified, or made more sophisticated to fit the needs of a particular investigation. The suggested apparatus is basic, and the apparatus is limited only by the judgment and ingenuity of the investigator.

3.2.1 A glass reaction kettle can be used where configuration and size of specimens will permit entry through the narrow kettle neck.

3.2.2 In some cases, a wide mouth jar with a suitable closure is sufficient when simple immersion tests at ambient temperatures are to be investigated.

3.2.3 Open beaker tests should not be used because of evaporation and contamination.

3.2.4 In more complex tests, provisions might be needed for continuous flow or replenishment of the corrosive liquid while simultaneously maintaining a controlled atmosphere.

4. Test Conditions

4.1 Selection of the conditions for a laboratory corrosion test will be determined by the purpose of the test.

4.1.1 If the test is to be a guide for the selection of a material for a particular purpose, the limits of controlling factors in service must be determined. These factors include oxygen concentration, temperature, rate of flow, pH value, and other important characteristics of the solution.

4.2 An effort should be made to duplicate all service conditions in the corrosion test.

4.3 It is important that test conditions be controlled throughout the test in order to ensure reproducible results.

4.4 The spread in corrosion rate values for duplicate specimens in a given test probably should not exceed ± 10% of the average when the attack is uniform.

4.5 Composition of solution.

4.5.1 Test solutions should be prepared accurately from chemicals conforming to the Standards of the Committee on Analytical Reagents of the American Chemical Society,[1] and distilled water, except in those cases where naturally occurring solutions or those taken directly from some plant process are used.

4.5.2 The composition of the test solution should be controlled to the fullest extent possible and should be described as completely and as accurately as possible when the results are reported.

4.5.2.1 Minor constituents should not be overlooked because they often affect corrosion rates.

4.5.2.2 Chemical content should be reported as percentage by weight of the solution. Molarity and normality are also helpful in defining the concentration of chemicals in the test solution.

4.5.3 The composition of the test solution should be checked by analysis at the end of the test to determine the extent of change in composition, such as might result from evaporation.

4.5.4 Evaporation losses should be controlled by a constant level device or by frequent additions of appropriate solution to maintain the original volume within ± 1%.

4.5.5 In some cases, composition of the test solution may change as a result of catalytic decomposition or by reaction with the test coupon. These changes should be determined if possible. Where required, the exhausted constituents should be added or a fresh solution provided, during the course of the test.

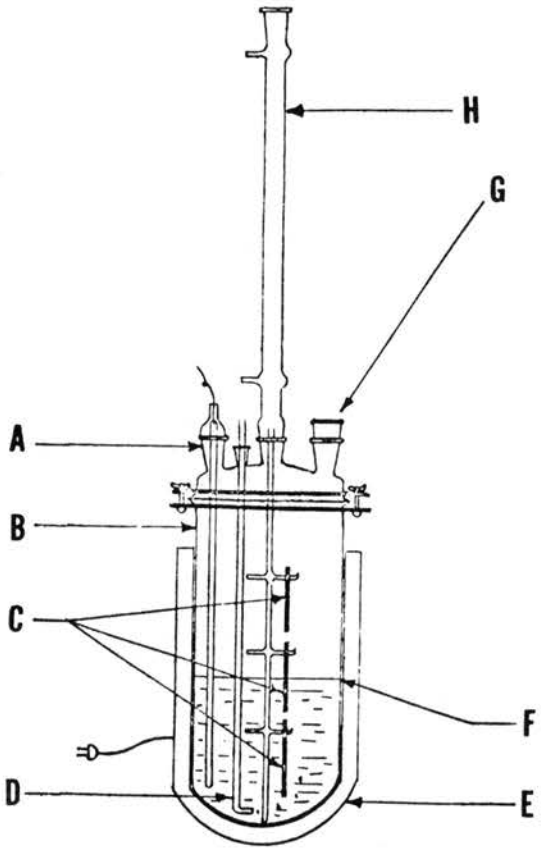

Figure 1 – Typical resin flask that can be used as a versatile and convenient apparatus to conduct simple immersion tests. Configuration of the flask top is such that more sophisticated apparatus can be added as required by the specific test being conducted. A = thermowell, B = resin flask, C = specimens hung on supporting device, D = gas inlet, E = heating mantle, F = liquid interface, G = opening in flask for additional apparatus that may be required, and H = reflux condenser.

4.5.6 When possible, only one type of metal should be exposed in a given test. If several different metals are exposed in the same solution, the corrosion products from one metal may affect the rate of attack on another metal. For example, copper corrosion products can reduce corrosion of stainless steel and titanium but can accelerate corrosion of aluminum.

4.6 Temperature of solution.

4.6.1 Temperature of the corroding solution should be controlled within ± 1 C (± 1.8 F) and must be stated in the report of test results.

4.6.2 If no specific temperature, such as boiling, is required or if a temperature range is to be investigated, the selected temperatures used in the test must be reported.

4.6.3 For tests at ambient temperatures, the tests should be conducted at the highest temperature anticipated for stagnant storage in summer months. This temperature may be as high as 40 to 45 C (104 to 113 F) in some areas. The variation in temperature should be reported also (e.g., 40 C ± 2 C).

4.7 Aeration of solution.

4.7.1 Unless specified, the solution should not be aerated. Most tests related to process equipment should be run with the natural atmosphere inherent in the process, such as the vapors of the boiling liquid.

4.7.2 If aeration is used, the specimens should not be located in the direct air stream from the sparger. Extraneous effects can be encountered if the air stream impinges on the specimens.

4.7.3 If complete exclusion of dissolved oxygen is necessary, specific techniques are required such as prior heating of the solution and sparging with an inert gas (usually nitrogen). A liquid atmospheric seal is required on the test vessel to prevent further contamination.

4.7.4 If oxygen saturation of the test solution is desired, this can best be achieved by sparging. For other degrees of aeration, the solution should be sparged with synthetic mixtures of air or oxygen with an inert gas.

4.8 Solution velocity.

4.8.1 The effect of velocity is not usually determined in normal laboratory tests although specific tests have been designed for this purpose. However, for the sake of reproducibility, some velocity control is desirable.

4.8.2 Tests at the boiling point should be conducted with minimum possible heat input, and boiling chips should be used to avoid excessive turbulence and bubble impingement.

4.8.3 In tests conducted below the boiling point, thermal convection generally is the only source of liquid velocity.

4.8.4 In test solutions with high viscosities, supplemental controlled stirring with a magnetic stirrer is recommended.

4.9 Volume of test solution.

4.9.1 The volume of the test solution should be large enough to avoid any appreciable change in its corrosiveness either through exhaustion of corrosive constituents or accumulation of corrosion products that might affect further corrosion.

4.9.2 A suitable volume-to-area ratio is 125 milliliters of solution per square inch of specimen surface. This corresponds to the recommendation of ASTM Standard A262-64T for the Huey Test.

4.9.3 The preferred volume-to-area ratio is 250 milliliters of solution per square inch of specimen surface as stipulated in ASTM Standard A-279-63 on "Total Immersion Corrosion Test of Stainless Steels."

4.9.4 When the test objective is to determine the effect of a metal or alloy on the characteristics of the test solution (for example, to determine the effects of metals on dyes), it is desirable to reproduce the ratio of solution volume to exposed metal surface that exists in practice. The actual time of contact of the metal with the solution also must be taken into account. Any necessary distortion of the test conditions must be considered when interpreting the results.

4.10 Method of supporting specimens.

4.10.1 The supporting device and container should not be affected by or cause contamination of the test solution.

4.10.2 The method of supporting specimens will vary with the apparatus used for conducting the test but should be designed to insulate the specimens from each other physically and electrically and to insulate the specimens from any metallic container or supporting device used with the apparatus.

4.10.3 Shape and form of the specimen support should assure free contact of the specimen with the corroding solution, the liquid line, or the vapor phase as shown in Figure 1. If clad alloys are exposed, special procedures will be required to insure that only the cladding is exposed unless the purpose is to test the ability of the cladding to protect cut edges in the test solution.

4.10.4 Some common supports are glass or ceramic rods, glass saddles, glass hooks, fluorocarbon plastic strings, and various insulated or coated metallic supports.

4.11 Duration of test.

4.11.1 Although duration of any test will be determined by the nature and purpose of the test an

excellent procedure for evaluating the effect of time on corrosion of the metal and also on the corrosiveness of the environment in laboratory tests has been presented by Wachter and Treseder.[2] This technique is called the "Planned Interval Test," and the procedure and evaluation of results are given in Table I. Other procedures that require the removal of solid corrosion products between exposure periods will not measure accurately the normal changes of corrosion with time.

4.11.2 Materials which experience severe corrosion generally do not need lengthy tests to obtain accurate corrosion rates. Although this assumption is valid in many cases, there are cases where it is not valid. For example, lead exposed to sulfuric acid corrodes at an extremely high rate at first while building a protective film, then the rates decrease considerably so that further corrosion is negligible. The phenomenon of forming a protective film is observed with many corrosion resistant materials, and therefore short tests on such materials would indicate a high corrosion rate and would be completely misleading.

4.11.3 Short time tests also can give misleading results on alloys that form passive films, such as stainless steels. With borderline conditions, a prolonged test may be needed to permit breakdown of the passive film and subsequently more rapid attack. Consequently, tests run for long periods are considerably more realistic than those conducted for short durations. This statement must be qualified by stating that corrosion should not proceed to the point where the original specimen size or the exposed area is drastically reduced or where the metal is perforated.

4.11.4 If anticipated corrosion rates are moderate or low, the following equation[2] gives a suggested test duration:

$$\text{Duration of test (hr)} = \frac{2000}{\text{corrosion rate (mpy)}}$$

Examples: Where the corrosion rate is 10 mpy, the test should run for at least 200 hours. If the rate is 1 mpy, the duration should be at least 2000 hours.

4.11.4.1 This method of estimating test duration is useful only as an aid in deciding, after a test has been made, whether or not it is desirable to repeat the test for a longer period. The most common testing periods are 48 to 168 hours (2 to 7 days).

4.11.5 In some cases, it may be necessary to know the degree of contamination caused by the products of corrosion; this can be accomplished by analysis of

TABLE 1 - Planned Interval Test[2]

(Reprinted by permission from "Chemical Engineering Progress," June, 1947.)

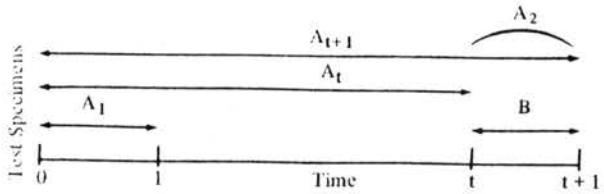

Identical specimens all placed in the same corrosive fluid. Imposed conditions of the test kept constant for entire time t + 1. Letters, A_1, A_t, A_{t+1}, B, represent corrosion damage experienced by each test specimen. A_2 is calculated by subtracting A_t from A_{t+1}.

Occurrences During Corrosion Test		Criteria
Liquid corrosiveness	unchanged	$A_1 = B$
	decreased	$B < A_1$
	increased	$A_1 < B$
Metal corrodibility	unchanged	$A_2 = B$
	decreased	$A_2 < B$
	increased	$B < A_2$

Combinations of Situations

Liquid Corrosiveness	Metal Corrodibility	Criteria
1. unchanged	unchanged	$A_1 = A_2 = B$
2. unchanged	decreased	$A_2 < A_1 = B$
3. unchanged	increased	$A_1 = B < A_2$
4. decreased	unchanged	$A_2 = B < A_1$
5. decreased	decreased	$A_2 < B < A_1$
6. decreased	increased	$A_1 > B < A_2$
7. increased	unchanged	$A_1 < A_2 = B$
8. increased	decreased	$A_1 < B > A_2$
9. increased	increased	$A_1 < B < A_2$

Example of Planned Interval Corrosion Test

Conditions: Duplicate strips of low-carbon steel, each 3/4 by 3 in., immersed in 200 ml of 10% $AlCl_3$ - 90% $SbCl_3$ mixture through which dried HCl gas was slowly bubbled at atm. pressure. Temperature 90 C.

	Interval, days	Wt. Loss, mg	Penetration, mils	Apparent Corrosion Rate, mils/yr
A_1	0-1	1080	1.69	620
A_t	0-3	1430	2.24	270
A_{t+1}	0-4	1460	2.29	210
B	3-4	70	0.11	40
A_2	calc. 3-4	30	0.05	18

$A_2 < B < A_1$
$0.05 < 0.11 < 1.69$

Therefore, liquid markedly decreased in corrosiveness during test, and formation of partially protective scale on the steel was indicated.

the solution after corrosion has occurred. The corrosion rate can be calculated from the concentration of the matrix metal found in the solution, and it can be compared to that determined from the weight loss of the specimens. However, some of the corrosion products usually adhere to the specimen as a scale, and the corrosion rate calculated from the metal content in the solution is not always correct.

5. Methods of Cleaning Specimens After the Test

5.1 Before specimens are cleaned, their appearance should be observed and recorded. Location of deposits, variations in types of deposits, or variations in corrosion products are extremely important in evaluating localized corrosion, such as pitting and concentration cell attack.

5.2 Cleaning specimens after the test is a vital step in the corrosion test procedure and, if not done properly, can cause misleading results.

5.2.1 Generally, the cleaning procedure should

TABLE 2–Methods for Chemical Cleaning of Corrosion Test Specimens After Exposure

Material	Chemical	Time	Temperature	Remarks
Aluminum and Aluminum Alloys	70% HNO_3	2-3 min	Room	Follow by light scrub.
	or			
	2% CrO_3, 5% H_3PO_4, Soln	10 min	175-185 F (79-85 C)	Used when oxide film resists HNO_3 treatment. Follow by 70% HNO_3 treatment previously described.
Copper and Copper Alloys	15-20% HCl	2-3 min	Room	Follow by light scrub.
	or			
	5-10% H_2SO_4	2-3 min	Room	Follow by light scrub.
Lead and Lead Alloys	1% acetic acid	10 min	Boiling	Follow by light scrub. Removes PbO.
	or			
	5% ammonium acetate	5 min	Hot	Follow by light scrub. Removes PbO and/or $PbSO_4$.
	or			
	80 g/l NaOH, 50 g/l mannitol, 0.62 g/l hydrazine sulfate	30 min, or until clean	Boiling	Follow by light scrub.
Iron and Steel	20% NaOH, 200 g/l zinc dust	5 min	Boiling	---
	or			
	conc. HCl, 50 g/l $SnCl_2$ + 20 g/l $SbCl_3$	Until clean	Cold	---
Magnesium and Magnesium Alloys	15% CrO_3, 1% $AgCrO_4$ Soln.	15 min	Boiling	---
Nickel and Nickel Alloys	15-20% HCl	Until clean	Room	---
	or			
	10% H_2SO_4	Until clean	Room	---
Stainless Steel	10% HNO_3	Until clean	140 F (60 C)	Avoid contamination with chlorides
Tin and Tin Alloys	15% Na_3PO_4	10 min	Boiling	Follow by scrubbing.
Zinc	10% NH_4Cl	5 min	Room	Follow by light scrubbing.
	followed by			
	5% CrO_3, 1% $AgNO_3$ Soln.	20 sec	Boiling	---
	or			
	Saturated ammonium acetate	Until clean	Room	Follow by light scrub.
	or			
	100 g/l NaCN	15 min	Room	---

remove all corrosion products from specimens with a minimum removal of sound metal.

5.2.2 Set rules cannot be applied to specimen cleaning because procedures will vary depending on the type of metal being cleaned and on the degree of adherence of corrosion products.

5.3 Cleaning methods can be divided into three general categories: mechanical, chemical, and electrolytic.

5.3.1 Mechanical cleaning includes scrubbing, scraping, brushing, mechanical shocking, and ultrasonic procedures. Scrubbing with a bristle brush and mild abrasive is the most popular of these methods; the others are used principally as a supplement to remove heavily encrusted corrosion products before scrubbing. Care should be used to avoid the removal of sound metal.

5.3.2 Chemical cleaning implies the removal of material from the surface of the specimen by dissolution in an appropriate chemical solution. Solvents such as acetone, carbon tetrachloride, and alcohol, are used to remove oil, grease, or resin and are usually applied prior to other methods of cleaning. Chemicals are chosen for application to a specific material. Some of these treatments in general use are outlined in Table 2.

5.3.3 Electrolytic cleaning should be preceded by scrubbing to remove loosely adhering corrosion products. One method of electrolytic cleaning that has been found to be useful for many metals and alloys is as follows:

Solution	5% (by weight) H_2SO_4
Anode	Carbon or lead
Cathode	Test specimen
Cathode C.D.	20 amp/dm^2 (129 amp/sq in)
Inhibitor	2 cc organic inhibitor per liter
Temperature	74 C (165 F)
Exposure period	3 minutes

5.3.3.1 Precautions must be taken to insure good electrical contact with the specimen, to avoid contamination of the solution with easily reducible metal ions, and to insure that inhibitor decomposition has not occurred. Instead of using 2 milliliters of any proprietary inhibitor, 0.5 gram per liter of inhibitors such as diorthotolyl thiourea or quinoline ethiodide can be used.

5.4 Whatever treatment is used to clean specimens after a corrosion test, its effect in removing metal should be determined, and the weight loss should be corrected accordingly. A "blank" specimen should be weighed before and after exposure to the cleaning procedure to establish this weight loss.

5.4.1 Following removal of all scale, the specimen should be treated as discussed in Section 2.8.

5.4.2 A description of the cleaning method should be included with the data reported.

6. Evaluation of Results

6.1 After corroded specimens have been cleaned, they should be reweighed with an accuracy corresponding to that of the original weighing. The weight loss during the test period can be used as the principal measure of corrosion.

6.2 After the specimens have been reweighed, they should be examined carefully for the presence of pits. If there are pits, the average and maximum depths of pits are determined after measurement with a pit gauge or a calibrated microscope which can be focused first on the edge and then on the bottom of the pit. An excellent discussion of pitting corrosion has been published.[3]

6.2.1 Pit depths should be reported in millimeters or thousandths of an inch for the test period and not interpolated or extrapolated to millimeters per year or thousandths of an inch per year or any other arbitrary period because rarely, if ever, is the rate of initiation or propagation of pits uniform.

6.2.2 The size, shape, and distribution of pits should be noted. A distinction should be made between those occurring underneath the supporting devices (concentration cells) and those on surfaces that were freely exposed to the test solution.

6.3 If the material being tested is suspected of being subject to dealloying forms of corrosion such as dezincification, or to intergranular attack, a cross section of the specimen should be microscopically examined to determine the type and depth of such attack.

6.4 The specimen may be subjected to simple bending tests to determine whether any embrittlement has occurred.

6.5 It may be desirable to make quantitative mechanical tests to compare the exposed specimens with uncorroded specimens reserved for the purpose, as described in Section 2.2.

7. Calculating Corrosion Rates

7.1 The calculation of corrosion rates requires several pieces of information and several assumptions.

7.1.1 The use of corrosion rates implies that all weight loss has been due to general corrosion and not to localized corrosion, such as pitting or sensitized areas on welded coupons. Localized corrosion is reported separately.

7.1.2 The use of corrosion rates also implies that the material has not been internally attacked as by dezincification or intergranular corrosion.

7.1.3 Internal attack can be expressed as a corrosion rate if desired. However, the calculations must not be based on weight loss, which is usually small, but on microsections which show depth of attack.

7.2 Assuming that localized or internal corrosion is not present or are recorded separately in the report, the corrosion rate expressed as mils penetration per year (mpy) or millimeters per year (mmpy) can be calculated by the equations:

$$\text{mpy} = \frac{\text{wt loss} \times 534}{(\text{area})(\text{time})(\text{metal density})}$$

$$\text{mmpy} = \frac{\text{wt loss} \times 13.56}{(\text{area})(\text{time})(\text{metal density})}$$

where weight loss is in milligrams, area is square inches of metal surface exposed, and time is hours exposed.

Metal density of many common alloys (expressed in grams per cubic centimeter) is listed in Table 3. The density for new or unlisted alloys can be obtained from the producer or from various metal handbooks.

TABLE 3 – Density of Common Metals for Use in Corrosion Rate Calculations[9]

Alloy	Density, g/cc
Aluminum	
99.0 + Al	2.71
Al, 1.2 Mn	2.73
Al, 1.0 Mg, 0.6 Si, 0.25 Cr	2.70
Brass	
85 Cu, 15 Zn	8.75
71 Cu, 28 Zn, 1 Sn	8.53
65 Cu, 35 Zn	8.47
60 Cu, 39.25 Zn, 0.75 Sn	8.41
Bronze	
95 Cu, 5 Sn	8.86
90 Cu, 10 Sn	8.78
85 Cu, 5 Sn, 5 Zn, 5 Pb	8.80
94.8 Cu, 3 Si	8.53
95 Cu, 5 Al	8.17
85-90 Cu, 10 Al	7.58
Copper	
99.90 Cu, 0.01 P	8.91
Cupro-Nickel	
90 Cu, 10 Ni	8.93
70 Cu, 30 Ni	8.94
Iron	
94 Fe, 3.5 C, 2.5 Si	7.00
96 Fe, 3.0 C	7.60
99.94 Fe, 0.025 S, 0.017 Mn, 0.012 C, 0.005 P	7.86
84.3 Fe, 14.5 Si, 0.35 Mn, 0.85 C	7.00
Lead	
99.90 + Pb	11.34
Nickel	
99.4 Ni + Co	8.89
67 Ni, 30 Cu	8.84
62 Ni, 30 Mo, 5 Fe	9.24
58 Ni, 17 Mo, 15 Cr, 5 W, 5 Fe	8.94
80 Ni, 14 Cr, 6 Fe	8.51
Steel	
0.20 C, Mn, P, S	7.85
Stainless Steel	
11.50-13.50 Cr, 0.15 C	7.75
14.00-18.00 Cr, 0.12 C	7.70
18.00-20.00 Cr, 8.00-12.00 Ni, 0.08 C	7.93
16.00-18.00 Cr, 10.00-14.00 Ni, 2.00-3.00 Mo, 0.08 C	7.98
17.00-19.00 Cr, 9.00-12.00 Ni, 0.08 C, Ti	8.02
17.00-19.00 Cr, 9.00-12.00 Ni, 0.08 C, Cb	8.02
19.00-21.00 Cr, 24.00-30.00 Ni, 2.00-3.00 Md, 3.00-4.00 Cu	8.00
Tantalum	16.60
Tin	7.30
Titanium	4.54
Zirconium	6.53

8. Reporting the Data

8.1 The importance of reporting all data as completely as possible cannot be overemphasized.

8.2 Expansion of the testing program in the future or correlating the results with tests of other investigators will be possible only if all pertinent information is properly recorded.

8.3 The following checklist is a recommended guide for reporting all important information and data:

8.3.1 Corrosive media and concentration (changes during test).

8.3.2 Volume of test solution.

8.3.3 Temperature (maximum, minimum, average).

8.3.4 Aeration (describe conditions or technique).

8.3.5 Agitation (describe conditions or technique).

8.3.6 Type of apparatus used for test.

8.3.7 Duration of each test.

8.3.8 Chemical composition or trade name of metals tested.

8.3.9 Form and metallurgical conditions of specimens.

8.3.10 Exact size, shape, and area of specimens.

8.3.11 Treatment used to prepare specimens for test.

8.3.12 Number of specimens of each material tested, and whether specimens were tested separately or which specimens were tested in the same container.

8.3.13 Method used to clean specimens after exposure and the extent of any error expected by this treatment.

8.3.14 Actual weight losses for each specimen.

8.3.15 Evaluation of attack if other than general, such as crevice corrosion under support rod, pit depth and distribution, and results of microscopic examination or bend tests.

8.3.16 Corrosion rates for each specimen expressed as mils per year.

8.4 Minor occurrences or deviations from the proposed test program often can have significant effects and should be reported if known.

8.5 Statistics can be a valuable tool for analyzing the results from test programs designed to generate adequate data and should be used wherever possible. Excellent references for the use of statistics in corrosion studies include References 4 through 8.

References

1. Joseph Rosin. Reagent Chemicals and Standards, Fifth Edition. D. Van Nostrand Co., Inc., 120 Alexander St., Princeton, N. J., 1966.
2. A. Wachter and R. S. Treseder. Corrosion Testing Evaluation of Metals for Process Equipment. *Chemical Engineering Progress*, 43, 315-326 (1947) June.
3. N. D. Greene and M. G. Fontana. A Critical Analysis of Pitting Corrosion. *Corrosion*, 15, 25t (1959) January.
4. Harold S. Mickley, Thomas K. Sherwood, and Charles E. Reed (editors). Applied Mathematics in Chemical Engineering, (second edition). McGraw-Hill, New York, N. Y., 1957.
5. D. M. Douglas. Are You Using or Abusing Data? Paper presented at the Northeast-North Central Region Conference, National Association of Corrosion Engineers, October 4-6, 1965, Pittsburgh, Pa.
6. W. J. Youden. Experimentation and Measurement. National Science Teachers Association, Washington, D. C., 1962.
7. F. F. Booth and G. E. G. Tucker. Statistical Distribution of Endurance in Electrochemical Stress-Corrosion Tests. *Corrosion*, 21, 173 (1965) May.
8. Compilation of Examples of Applying Statistics to Corrosion Problems. Report of ASTM Committee G-1 on Corrosion of Metals, prepared by Subcommittee III on Statistics. ASTM, 1916 Race St., Philadelphia, Pa.
9. Metals Handbook, American Society for Metals, Metals Park, Novelty, Ohio, 8th Edition, Volume 1, 1961.

Appendix H

Title 10 C.F.R. Waste Disposal

§ 20.301 General requirement.

No licensee shall dispose of licensed material except:

(a) By transfer to an authorized recipient as provided in the regulations in Part 30, 40, or 70 of this chapter, whichever may be applicable; or

(b) As authorized pursuant to § 20.302; or

(c) As provided in § 20.303 or § 20.304, applicable respectively to the disposal of licensed material by release into sanitary sewerage systems or burial in soil, or in § 20.106 (Radioactivity in effluents to unrestricted areas).

[25 FR 10914, Nov. 17, 1960, as amended at 39 FR 27121, July 25, 1974]

§ 20.302 Method for obtaining approval of proposed disposal procedures.

(a) Any licensee or applicant for a license may apply to the Commission for approval of proposed procedures to dispose of licensed material in a manner not otherwise authorized in the regulations in this chapter. Each application should include a description of the licensed material and any other radioactive material involved, including the quantities and kinds of such material and the levels of radioactivity involved, and the proposed manner and conditions of disposal. The application should also include an analysis and evaluation of pertinent information as to the nature of the environment, including topographical, geological, meteorological, and hydrological characteristics; usage of ground and surface waters in the general area; the nature and location of other potentially affected facilities; and procedures to be observed to minimize the risk of unexpected or hazardous exposures.

(b) The Commission will not approve any application for a license to receive licensed material from other persons for disposal on land not owned by the Federal government or by a State government.

(c) The Commission will not approve any application for a license for disposal of licensed material at sea unless the applicant shows that sea disposal offers less harm to man or the environment than other practical alternative methods of disposal.

[25 F.R. 10914, Nov. 17, 1960, as amended at 26 F.R. 352, Jan. 18, 1961; 36 F.R. 23138, Dec. 4, 1971]

§ 20.303 Disposal by release into sanitary sewage systems.

No licensee shall discharge licensed material into a sanitary sewerage system unless:

(a) It is readily soluble or dispersable in water; and

(b) The quantity of any licensed or other radioactive material released into the system by the licensee in any one day does not exceed the larger of subparagraphs (1) or (2) of this paragraph:

(1) The quantity which, if diluted by the average daily quantity of sewage released into the sewer by the licensee, will result in an average concentration equal to the limits specified in Appendix B, Table I, Column 2 of this part; or

(2) Ten times the quantity of such material specified in Appendix C of this part; and

(c) The quantity of any licensed or other radioactive material released in any one month, if diluted by the average monthly quantity of water released by the licensee, will not result in an average concentration exceeding the limits specified in Appendix B, Table I, Column 2 of this part; and

(d) The gross quantity of licensed and other radioactive material released into the sewerage system by the licensee does not exceed one curie per year.

Excreta from individuals undergoing medical diagnosis or therapy with radioactive material shall be exempt from any limitations contained in this section.

§ 20.304 Disposal by burial in soil.

No licensee shall dispose of licensed material by burial in soil unless:

(a) The total quantity of licensed and other radioactive materials buried at any one location and time does not exceed, at the time of burial, 1,000 times the amount specified in Appendix C of this part; and

(b) Burial is at a minimum depth of four feet; and

(c) Successive burials are separated by distances of at least six feet and not more than 12 burials are made in any year.

§ 20.305 Treatment or disposal by incineration.

No licensee shall treat or dispose of licensed material by incineration except as specifically approved by the Commission pursuant to §§ 20.106(b) and 20.302.

[29 FR 14435, Oct. 21, 1964]

§ 20.106 Radioactivity in effluents to unrestricted areas.

(a) A licensee shall not possess, use, or transfer licensed material so as to release to an unrestricted area radioactive material in concentrations which exceed the limits specified in Appendix "B", Table II of this part, except as authorized pursuant to § 20.302 or paragraph (b) or this section. For purposes of this section concentrations may be averaged over a period not greater than one year.

(b) An application for a license or amendment may include proposed limits higher than those specified in paragraph (a) of this section. The Commission will approve the proposed limits if the applicant demonstrates:

(1) That the applicant has made a reasonable effort to minimize the radioactivity contained in effluents to unrestricted areas; and

(2) That it is not likely that radioactive material discharged in the effluent would result in the exposure of an individual to concentrations of radioactive material in air or water exceeding the limits specified in Appendix "B", Table II of this part.

(c) An application for higher limits pursuant to paragraph (b) of this section shall include information demonatrating that the applicant has made a reasonable effort to minimize the radioactivity discharged in effluents to unrestricted areas, and shall include, as pertinent:

(1) Information as to flow rates, total volume of effluent, peak concentration of each radionuclide in the effluent, and concentration of each radionuclide in the effluent averaged over a period of one year at the point where the effluent leaves a stack, tube, pipe, or similar conduit;

(2) A description of the properties of the effluents, including:

(i) chemical composition:

(ii) physical characteristics, including suspended solids content in liquid effluents, and nature of gas or aerosol for air effluents;

(iii) the hydrogen ion concentrations (p^H) of liquid effluents; and

(iv) the size range of particulates in effluents released into air.

(3) A description of the anticipated human occupancy in the unrestricted area where the highest concentration of radioactive material from the effluent is expected, and, in the case of a river or stream, a description of water uses downstream from the point of release of the effluent.

(4) Information as to the highest concentration of each radionuclide in an unrestricted area, including anticipated concentrations averaged over a period of one year:

(i) In air at any point of human occupancy;

or

(ii) In water at points of use downstream from the point of release of the effluent.

(5) The background concentration of radionuclides in the receiving river or stream prior to the release of liquid effluent.

(6) A description of the environmental monitoring equipment, including sensitivity of the system, and procedures and calculations to determine concentrations of radionuclides in the unrestricted area and possible reconcentrations of radionuclides.

(7) A description of the waste treatment facilities and procedures used to reduce the concentration of radionuclides in effluents prior to their release.

(d) For the purpose of this section the concentration limits a Appendix "B", Table II of this part shall apply at the boundary of the restricted area. The concentration of radioactive material discharged through a stack, pipe or similar conduit may be determined wih respect to the point where the material leaves the conduit. If the conduit discharges within the restricted area, the concentration at the boundary may be determined by applying appropriate factors for dilution, dispersion, or decay between the point of discharge and the boundary.

(e) In addition to limiting concentrations in effluent streams, the Commission may limit quantities of

KEY: Existing rules are printed in standard type face. Proposed additions to existing rules are printed in **boldface**, while proposed deletions from existing rules are printed within [single brackets]. Additions to proposed rules are **underlined and boldfaced**, while deletions from proposed rules are printed within [[double brackets]].

radioactive materials released in air or water during a specified period of time if it appears that the daily intake of radioactive material from air, water, or food by a suitable sample of an exposed population group, averaged over a period not exceeding one year, would otherwise exceed the daily intake resulting from continuous exposure to air or water containing one-third the concentration of radioactive materials specified in Appendix "B", Table II of this part.

(f) The provisions of this section do not apply to disposal of radioactive material into sanitary sewerage systems, which is governed by § 20.303.

[29 F.R. 14434, Oct. 21, 1964]

Appendix I

Title 16 C.F.R.

§ 1500.41 Method of testing primary irritant substances.

Primary irritation to the skin is measured by a patch-test technique on the abraded and intact skin of the albino rabbit, clipped free of hair. A minimum of six subjects are used in abraded and intact skin tests. Introduce under a square patch, such as surgical gauze measuring 1 inch by 1 inch and two single layers thick, 0.5 milliliter (in the case of liquids) or 0.5 gram (in the case of solids and semisolids) of the test substance. Dissolve solids in an appropriate solvent and apply the solution as for liquids. The animals are immobilized with patches secured in place by adhesive tape. The entire trunk of the animal is then wrapped with an impervious material, such as rubberized cloth, for the 24-hour period of exposure. This material aids in maintaining the test patches in position and retards the evaporation of volatile substances. After 24 hours of exposure, the patches are removed and the resulting reactions are evaluated on the basis of the designated values in the following table:

Skin reaction	Value[1]
Erythema and eschar formation:	
No erythema	0
Very slight erythema (barely perceptible)	1
Well-defined erythema	2
Moderate to severe erythema	3
Severe erythema (beet redness) to slight eschar formations (injuries in depth)	4
Edema formation:	
No edema	0
Very slight edema (barely perceptible)	1
Slight edema (edges of area well defined by by definite raising)	2
Moderate edema (raised approximately 1 millimeter)	3
Severe edema (raised more than 1 millimeter and extending beyond the area of exposure)	4

[1]The "value" recorded for each reading is the average value of the six or more animals subject to the test.

Readings are again made at the end of a total of 72 hours (48 hours after the first reading). An equal number of exposures are made on areas of skin that have been previously abraded. The abrasions are minor incisions through the stratum corneum, but not sufficiently deep to disturb the derma or to produce bleeding. Evaluate the reactions of the abraded skin at 24 hours and 72 hours, as described in this paragraph. Add the values for erythema and eschar formation at 24 hours and at 72 hours for intact skin to the values on abraded skin at 24 hours and at 72 hours (four values). Similarly, add the values for edema formation at 24 hours and at 72 hours for intact and abraded skin (for values). The total of the eight values is divided by four to give the primary irritation score; for example:

Skin reaction	Exposure time (hours)	Evaluation value
Erythema and eschar formation:		
Intact skin	24	2
Do	72	1
Abraded skin	24	3
Do	72	2
Subtotal		8
Edema formation:		
Intact skin	24	0
Do	72	1
Abraded skin	24	1
Do	72	2
Subtotal		4
Total		12

Thus, the primary irritation score is $12 \div 4 = 3$.

Appendix J

Title 49 C.F.R.

§ 173.50 An explosive.

(a) For the purpose of Parts 170-189 of this subchapter an explosive is defined as any chemical compound, mixture, or device, the primary or common purpose of which is to function by explosion, i.e., with substantially instantaneous release of gas and heat, unless such com-

pound, mixture, or device is otherwise specifically classified in Parts 170-189 of this subchapter.

§ 173.300 Definitions.

For the purpose of Parts 170-189 of this chapter, the following terminology is defined:

(a) *Compressed gas*. The term "compressed gas" shall designate any material or mixture having in the container an absolute pressure exceeding 40 p.s.i. at 70°F. or, regardless of the pressure at 70°F., having an absolute pressure exceeding 104 p.s.i. at 130°F.; or any liquid flammable material having a vapor pressure exceeding 40 p.s.i. absolute at 100°F. as determined by ASTM Test D-323.

(b) *Flammable compressed gas*. Any compressed gas as defined in paragraph (a) of this section shall be classified as "flammable compressed gas" if any one of the following occurs:

(1) Either a mixture of 13 percent or less (by volume) with air forms a flammable mixture or the flammable range with air is wider than 12 percent regardless of the lower limit. These limits shall be determined at atmospheric temperature and pressure. The method of sampling and test procedure shall be acceptable to the Bureau of Explosives.

(2) Using the Bureau of Explosives' Flame Projection Apparatus (see Note 1), the flame projects more than 18 inches beyond the ignition source with valve opened fully, or the flame flashes back and burns at the valve with any degree of valve opening.

(3) Using the Bureau of Explosives' Open Drum Apparatus (see Note 1) there is any significant propagation of flame away from the ignition source.

(4) Using the Bureau of Explosives' Closed Drum Apparatus (see Note 1), there is any explosion of the vapor-air mixture in the drum.

(c) *Non-liquefied compressed gas*. A "non-liquefied compressed gas" is a gas, other than gas in solution, which under the charged pressure is entirely gaseous at a temperature of 70°F.

(d) *Liquefied compressed gas*. A "liquefied compressed gas" is a gas which, under the charged pressure, is partially liquid at a temperature of 70°F.

(e) *Compressed gas in solution*. A "compressed gas in solution" is a non-liquefied compressed gas which is dissolved in a solvent.

(f) *Flammable range*. The term "flammable range" shall designate the difference between the minimum and maximum volume percentages of the material in air that forms a flammable compressed gas.

(g) *Filling density*. The term "filling density" shall designate the percent ratio of the weight of gas in a container to the weight of water that the container will hold at 60°F. (One pound of water equals 27.737 cubic inches at 60°F.) For example, for a liquefied petroleum gas of 0.504/0.510 specific gravity, a 100-pound cylinder holds 238.1 pounds of water and the filling density is 42 percent; therefore the amount of gas permitted is 0.42×238.1 or 100 pounds.

(h) *Service pressure*. The term "service pressure" shall designate the authorized pressure marking on the container. For example, for cylinders marked "DOT 3A1800", the service pressure is 1800 psig (pounds per square inch gauge).

[29 F.R. 18743, Dec. 29, 1964, as amended by Amdt. 173-16, 34 F.R. 18248, Nov. 14, 1969; Amdt. 173-54, 36 F.R. 18469, Sept. 15, 1971]

§ 173.300 Definitions.

(b) *Flammable compressed gas*. Any compressed gas as defined in paragraph (a) of this section shall be classed as "flammable gas" if any one of the following occurs:

§ 177.824 Retesting and inspection of cargo tanks.

(a) *General*. In accordance with § 173.33 of this chapter (cargo tank use authorization) every cargo tank and every compartment of a cargo tank authorized as a qualified container, except those cargo tanks having a capacity of 3,000 gallons or less used exclusively for the transportation of flammable liquids, must fulfill the applicable requirements as set forth in this section.

(1) Each cargo tank, except specifications MC 330 and MC 331 cargo tanks, must be in compliance with the testing requirements prescribed in paragraphs (a), (b),

NOTE 1: A description of the Bureau of Explosives' Flame Projection Apparatus, Open Drum Apparatus. Closed Drum Apparatus, and method of tests may be procured from the Bureau of Explosives.

KEY: Existing rules are printed in standard type face. Proposed additions to existing rules are printed in **boldface**, while proposed deletions from existing rules are printed within [single brackets]. Additions to proposed rules are **underlined and boldfaced**, while deletions from proposed rules are printed within [[double brackets]].

(c), and (d) of this section. Each cargo tank must be in accordance with the marking requirement of paragraph (h) of this section.

(2) Every cargo tank whether constructed in accordance with DOT specifications or being operated as a novel tank under special permit authorization shall not continue in service unless it has successfully fulfilled the testing requirements as set forth in this section.

(b) *Visual inspection requirements*. Every cargo tank shall receive an external visual inspection at least once in ever 2-year period. The first such inspection shall be required at the time the next hydrostatic retest is due or prior to January 31, 1969, whichever comes first. This inspection shall be made by a responsible and experienced inspector who shall record the condition of the items set forth below. The inspection record shall be approved and signed by an authorized representative of the owner or operator. A written report of each inspection shall be retained in carrier's or owner's files for a period of 2 years after the date of inspection. Where insulation precludes external visual inspection, the cargo tank shall receive a visual internal inspection for corroded areas, defects in welds or tank sheets. Where visual inspection is precluded by both internal coating and external insulation or when the cargo tank is not equipped with a manhole, the tank shall be hydrostatically tested at 5-year intervals except as otherwise provided in paragraph (c) of this section. The tank shall not be placed in or returned to service if evidence of any unsafe condition is discovered and until such condition has been corrected. Inspection shall consist of the following items:

(1) The tank shall be inspected for: Corroded areas, bad dents, and defects in welds; defects in piping, valves, and gaskets; and other conditions, including leakage, which indicate weakness in the tank that might render it unsafe for transportation service.

(2) Devices for tightening manhole covers must be operative and leakage at manhole covers and gaskets must be corrected.

(3) Spring-loaded safety-relief valves rated in excess of 7 p.s.i.g. shall be removed from the cargo tank and tested.

(4) All emergency devices and valves must be free from corrosion, distortion, and any damage which will prevent their normal operation.

(5) Missing or loose bolts or nuts on any flanged connection or blank flange must be replaced or tightened.

(6) Required markings on the tank shall be legible.

(7) The entire vehicle shall be inspected for and comply with the Motor Carrier Safety Regulations, Part 393, Chapter III, of this title.

(c) *Hydrostatic or pneumatic testing requirements*. In addition to the visual inspection requirements as contained in paragraph (b) of this section, hydrostatic or pneumatic testing of cargo tanks (or compartments) is required to be conducted in accordance with the provisions contained in paragraph (d) of this section to qualify as an authorized container if:

(1) The cargo tank has been out of service (transporting dangerous articles) 1 year or more, or

(2) The cargo tank has been involved in an accident in which it may have been dented, torn, or otherwise damaged so as to affect its product retention integrity, or

(3) The shell of the cargo tank as originally manufactured has been modified, or

(4) The cargo tank is operating under special permit authorization. Such tanks shall be hydrostatically tested once every calendar year unless otherwise provided for in the special permit, and shall successfully fulfill the requirements set forth in paragraph (d) of this section. No two such required tests shall be closer than 6 months.

(d) *Hydrostatic or pneumatic testing procedure*. The requalification as an authorized container of cargo tanks (or compartments) required to be hydrostatically or pneumatically tested in accordance with paragraph (a) of this section shall be based on successfully meeting the requirements of this paragraph.

(1) *General*. (i) If a cargo tank is compartmented each compartment shall be similarly tested with the adjacent compartment empty and at atmospheric pressure.

(ii) All closures shall be in place while the test is being made. During the test all relief devices shall be clamped, plugged or otherwise rendered inoperative. Relief devices shall be returned to their operative condition immediately after the tests are completed.

(iii) The tank or compartment must hold the prescribed pressure for at least 10 minutes. All tank valves, piping, and other accessories in communication with the lading must be pressure tested and proven tight at the tank design pressure.

(iv) All pressure bearing portions of the heating system of a cargo tank (or compartment) employing such media as steam or hot water for heating the lading shall be tested under hydrostatic pressure and proven to be tight at 14.06 kg./sq. cm (200 psig). Systems employing flues for

heating the lading shall be suitably tested to insure against product leakage into the flues or into the atmosphere.

(2) *Hydrostatic test*. For Hydrostatic testing, the tank (including its domes, if any) must be completely filled with water or a liquid having a viscosity similar to water. Pressure must be gauged at the top of the tank applied in accordance with Table I following paragraph (d)(3) of this section.

(3) *Pneumatic test*. Pneumatic pressure must be applied in accordance with Table I of this paragraph. During the pneumatic test the entire surface of all joints under pressure must be coated with a solution of soap and water, heavy oil, or other materials suitable for the purpose of foaming or bubbling to indicate the presence of leaks. Other methods equally sensitive for determining leaks may be used.

TABLE I

Container type:	*Test pressure KG/SQ. CM.*
MC 300, 301, 302, 303, 305, 306	0.2109 (3 psig)
MC 304, 307	1.76[1] (25[1] psig)
MC 310, 311, 312	0.2109[1] (3[1] psig)

[1]Or 1½ times design pressure whichever is greater.

(4) *Required results*. A cargo tank (or compartment) required to be hydrostatically or pneumatically tested in accordance with paragraph (a) of this section may not be returned to service as a specification cargo tank unless it has successfully retained the applicable test pressure (see Table I in paragraph (d) (3) of this section) without leakage, undue distortion, excessive permanent expansion, or evidence of impending failure. The suitability of any repairs shall be determined by the same method of test.

(i) Cargo tanks (or compartments) with heating systems shall successfully withstand the hydrostatic pressure and examination specified in paragraph (d) (1) (iv) of this section.

(e) *Compressed gas cargo tanks, specifications MC 330 and MC 331*. Each cargo tank constructed in compliance with specification MC 330 or MC 331 (§ 178.337 of this subchapter) must be inspected and tested in accordance with § 173.33 of this subchapter.

(f) *Reporting requirements*. Each motor carrier shall file with the Director, Bureau of Motor Carrier Safety, Federal Highway Administration, Department of Transportation, Washington, D.C. 20590, a written listing of all MC 330 and MC 331 cargo tanks he has in service. Each motor carrier, upon placing in service or withdrawing from service any MC 330 and MC 331 cargo tank (other than a cargo tank used in interchange service which is reported upon by another carrier), shall file a supplemental report with the Bureau.

(1) The initial listing and each subsequent report must include the following information:

(i) The carrier's name, address, and telephone number.

(ii) One of the following statements: "Cargo tank placed in service" or "Cargo tank withdrawn from service," as appropriate, followed by the date of placement or removal;

(iii) The carrier's equipment number, manufacturer's name, manufacturer's serial number, specification MC 330 or MC 331, and "QT" (quenched and tempered) or "NQT" (not quenched and tempered).

(2) A copy of each report required by this paragraph must be retained by the carrier at its principal place of business during the period the tank is in the carrier's service and for 1 year thereafter. However, upon a written request to, and with the approval of, the Director, Regional Motor Carrier Safety Office, for the region in which a motor carrier has his principal place of business, the carrier may maintain the reports at a regional or terminal office.

(g) *Special testing required by the Department*. Upon the showing of probable cause of the necessity for retest, the Department may require any cargo tank to be retested at any time in accordance with the requirements prescribed for its periodic retest.

(h) *Test date markings*. The month and year of the last test must be durably and legibly marked on the tank in letters not less than 1¼ inches high, on the right side near the front. These markings must be near the metal certification plate, except on any tank having the plate other than on the right side near the front.

(i) *Withdrawal of certification*. If, as the result of an accident or for any other reason a cargo tank no longer meets the applicable specification, the carrier shall remove the metal certification plate or make it illegible (see § 173.24(c)(1)(v) of this subchapter). The details of the conditions necessitating withdrawal of the certification must be recorded and signed on the written certificate for that cargo tank. The vehicle owner shall retain the certificate for at least 1 year after withdrawal of the certification.

KEY: Existing rules are printed in standard type face. Proposed additions to existing rules are printed in **boldface**, while proposed deletions from existing rules are printed within [single brackets]. Additions to proposed rules are **underlined and boldfaced**, while deletions from proposed rules are printed within [[double brackets]].

Subpart C—Loading and Storage Chart of Hazardous Materials

§ 177.848 Loading and storage chart of hazardous materials.

(a) Hazardous materials must not be loaded, transported or stored together, except as provided in the Loading and Storage Chart of Hazardous Materials shown in this section.

The following table shows the hazardous materials which must not be loaded or stored together.

The letter X at an intersection of horizontal and vertical columns shows that these articles must not be loaded or stored together, for example: Detonating fuzes class A, with or without radioactive components g horizontal column must not be loaded or stored with high explosives or propellant explosives, class A b vertical column.

		a	b	c	d	e	f	g	1	2	3	4	5	6	7	8	9	10	11	12	13	14	15
	CLASS A EXPLOSIVES																						
	Low explosives or black powder	(*)		X							X												
	High explosives or propellant explosive, class A	(*)		X	*X			X			X						X	X	X	X	X	X	*X
	Initiating or priming explosives, wet: Diazodinitrophenol, fulminate of mercury, guanyl nitrosamino guanylidene hydrazine, lead azide, lead																						

(a) Hazardous materials must not be loaded, transported or stored together, except as provided in the Loading and Storage Chart of Hazardous Materials shown in this section.

| | | |

Subpart C—Loading and Storage Chart of Hazardous Materials—Continued

§ 177.848 Loading and storage chart of hazardous materials—Continued

The following table shows the hazardous materials which must not be loaded or stored together. The letter X at an intersection of horizontal and vertical columns shows that these articles must not be loaded or stored together, for example: Detonating fuzes class A, with or without radioactive components g horizontal column must not be loaded or stored with high explosives or propellant explosives, class A b vertical column.		Low explosives or black powder	High explosives or propellant explosives, class A	Initiating or priming explosives, wet: Diazodinitrophenol, fulminate of mercury, guanyl nitrosamino guanylidene hydrazine, lead azide, lead styphnate, nitro mannite, nitrosoguanidine, pentaerythrite tetranitrate, tetrazene, lead mononitroresorcinate	Blasting caps, with or without safety fuse (including electric blasting caps), detonating primers	Ammunition for cannon with explosive projectiles, gas projectiles, smoke projectiles, incendiary projectiles, illuminating projectiles, or ammunition for small arms with explosive bullets, or ammunition for small arms with explosive projectiles, or rocket ammunition with explosive projectiles, gas projectiles, smoke projectiles, incendiary projectiles, illuminating projectiles; and boosters (explosive), bursters (explosive), or supplementary charges (explosive) without detonators [4] [5]	Explosive projectiles, bombs, torpedoes, or mines, rifle or hand grenades (explosive), jet thrust units (jato), explosive, class A or igniters, jet thrust (jato), explosive, class A [6]	Detonating fuzes, class A, with or without radioactive components	Ammunition for cannon with empty, inert-loaded or solid projectiles, or without projectiles, or rocket ammunition with empty projectiles, inert-loaded or solid projectiles or without projectiles	Propellant explosives, class B, jet thrust units (jato), class B, igniters, jet thrust (jato), class B, or starter cartridges, jet engines, class B	Fireworks, special or railway torpedoes	Small arms ammunition, or cartridges, practice ammunition	Primers for cannon or small arms, empty cartridge bags, empty powder igniters, empty cartridge cases, primed, empty grenades, primed, combination primers or percussion caps, toy caps, explosive cable cutters, explosive rivets	Percussion fuzes, tracer fuzes or tracers	Time, combination or detonating fuzes, class C	Cordeau detonant fuse, safety squibs, fuse lighters, fuse igniters, delay electric igniters, electric squibs, instantaneous fuse or igniter cord	Fireworks, common	Flammable liquids or compressed flammable gases, red label	Flammable solids or oxidizing materials, yellow label	Acids or corrosive liquids, white label	Compressed nonflammable gases, green label	Poisonous gases or liquids in tank car tanks, cylinders, projectiles or bombs, poison gas label	Radioactive materials
		a	b	c	d	e	f	g	1	2	3	4	5	6	7	8	9	10	11	12	13	14	15
CLASS C EXPLOSIVES																							
Small arms ammunition, or cartridges, practice ammunition	4			X																			
Primers for cannon or small arms, empty cartridge bags—black powder igniters, empty cartridge cases, primed, empty grenades, primed, combination primers or percussion caps, toy caps, explosive cable cutters, explosive rivets	5			X																			
Percussion fuzes, tracer fuzes or tracers	6			X																			

Time, combination or detonating fuzes, class C	7			X																				
Cordeau detonant fuse, safety squibs, fuse lighters, fuse igniters, delay electric igniters, electric squibs, instantaneous fuse or igniter cord	8			X																				
Fireworks, common	9	X	X	X	[a]X	X	X	X															X	
OTHER DANGEROUS ARTICLES																								
Flammable liquids or flammable gases; Flammable liquid or flammable gas label	10	X	X	X	[a]X	X	X	X															X	
Flammable solids or oxidizing materials; Flammable solid, oxidizer, or organic peroxide label	11	X	[e]X	X	[a e]X	X	X	X													[b]X		X	
Corrosive liquids; Corrosive label	12	X	X	X	[a]X	X	X	X	[b]X	[b]X											[b]X		X	
Nonflammable gases; Nonflammable gas label	13	X	X	X	[a]X	X	X	X																
Poisonous gases or liquids in tank car tanks, cylinders, projectiles or bombs, poison gas label	14	X	X	X	X	X	X	X	X	X	X							X	X	X	X			
Radioactive materials	15	[f]X	[f]X	[f]X	[f]X	[f]X	[f]X	[f]X																

[a] Blasting caps or electric blasting caps in quantities not exceeding 1,000 caps may also be loaded and transported with articles named in vertical and horizontal columns 3, 9, 10, 11, 12, and 13. Loading and transportation of blasting caps or electric blasting caps except as prescribed in § 177.835, in any quantity, with articles named in vertical or horizontal columns b, c, e, or f is prohibited.

[b] Corrosive liquids must not be loaded above or adjacent to flammable solids, oxidizing materials, ammunition for cannon with or without projectiles, or propellant explosives, except that shippers loading truckload shipments of corrosive liquids and flammable solids or oxidizing materials packages and who have obtained prior approval from the Department may load such materials together when it is known that the mixture of contents would not cause a dangerous evolution of heat or gas.

[c] Explosives, class A and explosives, class B must not be loaded or stored with chemical ammunition containing incendiary charges or white phosphorus either with or without bursting charges.

[d] Bursters (explosive), boosters (explosive), or supplementary charges (explosive) without detonators when shipped by, to or for the Departments of the Army, Navy, and Air Force of the United States Government may be loaded with any of the articles named except those in columns c, d, 3, 9, 10, 11, 12, 13, 14, and 15.

[e] Does not include nitro carbo nitrate or ammonium nitrate, fertilizer grade, which may be loaded, transported or stored with high explosives or with blasting caps or electric blasting caps, and detonating primers.

[f] Normal uranium, depleted uranium, and thorium metal in solid form may also be loaded and transported with articles named in vertical and horizontal columns a, b, c, d, e, f, and g.

NOTE 1: Charged electric storage batteries must not be loaded in the same vehicle with explosives, class A.

NOTE 2: Cyanides or cyanide mixtures must not be loaded or stored with acids or corrosive liquids.

NOTE 3: Gas identification sets may be loaded and transported with all articles named except those in column c.

NOTE 4: Nitric acid, when loaded in the same motor vehicle with other acids or other corrosive liquids in carboys, must be separated from the other carboys. A 2 by 6 inch plank, set on edge, should be nailed across the motor vehicle floor at least 12 inches from the nitric acid carboys, and the space between the plank and the carboys of nitric acid should be filled with sand, sifted ashes, or other incombustible absorbent material.

NOTE 5: Smokeless powder for small arms in quantities not exceeding 100 pounds net weight in one motor vehicle shall be classed as a flammable solid for purposes of transportation when approved for such classification by the Bureau of Explosives.

Rules as Proposed

SW 1 (12)

(12) [Hazardous] **Special** Infectious Waste. Waste originating from the diagnosis, care or treatment of a person or animal that has been or may have been exposed to a contagious or infectious disease. [Hazardous] **special** infectious waste includes, but is not limited to,

(a) All wastes originating from persons placed in isolation for control and treatment of an infectious disease.

(b) Bandages, dressings, casts, catheters, tubing, and the like, which have been in contact with wounds, burns, or surgical incisions and which are suspect or have been medically identified as hazardous.

(c) All anatomical waste, including human and animal parts or tissues removed surgically or at autopsy.

(d) Laboratory and pathology waste of an infectious nature which has not been autoclaved.

(e) Any other waste, as defined by the State Board of Health, which, because of its [hazardous] **infectious** nature, requires handling and disposal in a manner prescribed for (a) through (d).

SW 1 (13)

[(13) Hazardous Wastes. Waste materials that are (a) toxic or poisonous; (b) corrosive; (c) irritating or sensitizing; (d) radioactive; (e) hazardous infectious; (f) explosive; or (g) flammable and that present a significant hazard to human health and the environment. They include, but are not limited to, those materials and concentrations of materials that are determined to be toxic by the U.S. Secretary of Health, Education, and Welfare pursuant to Section 10.6, of the Occupational Safety and Health Act of 1970 (Public Law 91-596).]

SW-2 (4)

[(4) Toxic or hazardous wastes shall be stored in the proper containers which are adequately labeled in a safe location and in compliance with the regulations of federal, state and local governments, and their regulatory agencies.]

SW 3 (4)

[(4) Vehicles and containers used for the collection and transportation of toxic or hazardous wastes shall be durable, enclosed and leakproof and shall be constructed, loaded, moved and unloaded in a safe manner and in compliance with the regulations of federal, state and local governments and their regulatory agencies.]

SW 4 Intermediate and Final Disposal of Solid Waste

Open burning is prohibited at all intermediate and final solid waste disposal sites, except as shall be allowed by any regulations of the Agency now or hereafter adopted.

Solid waste shall not be deposited at any intermediate or final solid waste disposal site in such a manner that material or leachings therefrom may cause pollution of ground or surface waters.

A person shall make an intermediate or final disposal of any solid waste, only at a site or facility for which a permit has been issued by the Agency unless otherwise provided by these regulations. Permits shall not be required for sites used for the disposal of solid waste from only a single family or household, a member of which is the owner, occupant or lessee of the property, under these regulations, but these shall be operated and maintained in a nuisance-free, pollution-free and aesthetic manner consistent with the intent of these regulations.

[Disposal of toxic and hazardous wastes shall be in a safe and pollution-free manner and in compliance with the regulations of federal, state and local governments and their regulatory agencies.]

SW 6 (2) (r)

(r) A permanent sign, identifying the operation and showing the permit number of the site, and indicating the hours and days the site is open for public use, rates, [hazardous wastes information,] the penalty for nonconforming dumping, and other pertinent information, shall be posted at the site entrance.

SW 6 (2) (v)

(v) The following shall not be acceptable for deposit in sanitary landfills except in amounts normal in household waste:

(i) Liquids

(ii) Any of the following: digested sewage sludges, lime sludges, grit chamber cleanings, bar screenings and other sludges, unless approved by the Director. Approval will be based on consideration of such factors as chemical composition, free moisture content and workability.

(iii) In no case will **special infectious waste,** raw sewage sludge, raw animal manure or septic tank pumpings be acceptable.

[(iv) Hazardous wastes as identified by the Agency.]

(v) Other substances that may be deemed unacceptable by the Agency.

Sw 6 (2) (w)

[(w) A storage area for hazardous wastes shall be provided at the sanitary landfill.]

SW 6 (3) (c) (ii)

(ii) A Development Plan of the site and immediately adjacent area showing dimensions, contours, at contour intervals of two feet or less, soil boring locations with surface elevations and present and planned pertinent features, including but not limited to roads, screening, buffer zone, fencing, gate, shelter and equipment buildings, surface water diversion and drainage, **and** water monitoring system [and the hazardous wastes storage area]. The development plan shall show progressive development of trench and/or area fills and any phase construction. The scale of the development plan shall not be greater than 200 feet per inch.

The development plan shall include consideration of the ultimate land use, for example, pre-planned building islands, not to be used for landfilling or refuse.

SW 7 Incineration (First Paragraph)

This regulation applies only to existing and new incinerators having a capacity greater than 6,000 pounds per hour [and those for the incineration of toxic or hazardous wastes]: All incinerators shall be designed and operated in a manner to conform to emission limitations of Regulation APC 7 and other Air Pollution Control Regulations of the Agency now or hereafter adopted. All incinerators shall have adequate disposal of liquid wastes. Any discharge to surface or ground waters of the state must meet the Agency's regulations of water quality or effluent standards now or hereafter adopted. Residue from all incinerators must be disposed of in conformance with these regulations.

Department of Public Welfare

Proposed Rules Governing Welfare Per-Diem Rates for Nursing Home Providers

Notice of Hearing

Notice is hereby given that a public hearing in the above-entitled matter will be held in the State Office Building Auditorium, Wabasha Street (between Aurora and Fuller), St. Paul, Minnesota, on Friday, October 21, 1977, commencing at 8:30 A.M. and continuing until all persons have had an opportunity to be heard.

All interested or affected persons will have an opportunity to participate. Statements may be made orally and written materials may be submitted at the hearing. In addition, written materials may be submitted by mail to Robert Herr, 308 Washington Square, White Bear Lake, Minnesota, 55110, telephone number: 612-426-1661, either before the hearing or within five working days after the public hearing ends, or for a longer period not to exceed 20 days if ordered by the hearing examiner.

Present Rule 49 establishes the criteria by which welfare rates for nursing homes are established. The proposed amendments to Rule 49 implement Laws of Minnesota 1977, chs. 326 and 453 pertaining to the allowability of depreciation expense or fixed assets, interest expense, investment allowance, rate limits, and to the conditions of participation in the Medical Assistance Program. The proposed amendments also clarify areas determined to be unclear as either the result of the appeal hearing process or agency rate discussions with nursing home providers and/or their representatives. Copies of the proposed rule are now available and one free copy may be obtained by writing to Jacqueline Bovaird, Department of Public Welfare, 1st Floor, Centennial Office Building, St. Paul, MN 55155. Additional copies will be available at the door on the date of the hearing. The agency's authority to promulgate the proposed rule is contained in Minn. Stat. ch. 15, 246, 253A, 256 and 257. A "statement of need" explaining why the agency feels the proposed rule is necessary and a "statement of evidence" outlining the testimony they will be introducing will be filed with the Hearing Examiners Office at least 25 days prior to the hearing and will be available there for public inspection.

Please be advised that Minn. Stat. ch. 10A, requires each lobbyist to register with the Ethical Practices Board within five days after he commences lobbying. Lobbying includes attempting to influence rulemaking by communicating or urging others to communicate with public officials. A lobbyist is generally any individual who spends more than $250 per year for lobbying or any individual who is engaged for pay or authorized to spend money by another individual or association and who spends more than $250 per year or five hours per month at lobbying. The statute provides certain exceptions. Questions should be directed to the Ethical Practices Board, 41 State Office Building, St. Paul, Minnesota 55155, phone 612-296-5615.

Edward J. Dirkswager, Jr.
Acting Commissioner

KEY: Existing rules are printed in standard type face. Proposed additions to existing rules are printed in **boldface**, while proposed deletions from existing rules are printed within [single brackets]. Additions to proposed rules are **underlined and boldfaced**, while deletions from proposed rules are printed within [[double brackets]].

Rules as Proposed

DPW 49 Regulations for determining welfare per-diem rates for nursing-home providers under the title XIX medical assistance program.

A. Applicability and purpose.

1. Authority. This regulation is enacted pursuant to the statutory authority vested in the Commissioner of Public Welfare pursuant to Minn. Stat. § 256b.27 to require reports, information and audits, and pursuant to Minn. Stat. § 256B.14, subd. 2, to promulgate rules and regulations for carrying out and enforcing the provisions of Minn. Stat. ch. 256B. This regulation is further promulgated pursuant to the procedures set our in Minn. Stat. § 15.0412, of the Minnesota Administrative Procedures Act.

2. Objectives. The procedures embodied herein define a system for the determination of a per-diem welfare rate for all nursing homes participating in the Medical Assistance Program and board and care licensed facilities participating in the Minnesota Supplemental Aid Program that promotes efficiency and economy and treats all providers of nursing home care on a uniform basis. Facilities that provide care to other than nursing patients must comply with these regulations if nursing-home patients account for 50 percent or more of the facility population.

Procedures have been defined to satisfy the State Plan for Medical Assistance and HEW Medical Services Administration Program Regulation Guide 19, which prescribe reasonable charges/cost-related rate-setting methods. The rate-setting procedures have also been defined to comply with the state statute that requires that cost differences between individual providers be recognized (Minn. Stat. § 256B.04, subd. 2) while at the same time establishing cost limitations to satisfy federal requirements that the welfare rates be consistent with efficiency, economy, and quality of care.

The welfare rate-setting procedures include herein also recognize required level and quality of care as defined by all governmental entities (including, but not limited to federal, state and local entities), establish effective accountability over the disbursement of Medical Assistance appropriations, and provide for a regular review mechanism for rate changes.

While the rate-setting procedures are intended to compensate the provider for the reasonable cost incurred by prudent management, including a return of capital through depreciation, they are not intended to provide funds for financing working capital needs or purchase of facilities. It is not intended that the regulations provide for reimbursement of actual cost through retroactive settlement.

B. Rate determination.

1. Method of calculating per diem rate.

a. Historical rate. The method of calculating the nursing-home provider per-diem rate for skilled, ICF I, and ICF II facilities will be to determine reasonable costs for the most current fiscal year and divide by adjusted patient days according to reasonable cost provisions of D. and cost-reporting regulations contained in C.

b. Incentive factor. In no case will the historical rate so determined under B.1.a. be less than the historical rate calculated for the previous year minus one-half of the difference. This provision shall not apply for rates for newly established providers under B.3.a. rates set by applying exceptions provided by D.8.d. and flat rates established under B.3.e. For multi-level providers this provision will be applied to the facilities average historical rate.

c. Allowance for known cost changes.

(1) Future cost increases or decreases that are in accordance with the reasonable cost principles of D.1 known as of the report filing date, must be added to or deducted from the historical rate determined according to B.1.a. and b. Such adjustment will be restricted to the elements defined in B.1.c.(1)(a) through (h) and shall be the annualized cost effect of such cost changes exclusive of any portion of the cost change included in the historical rate.

(a) Salary and wage changes to occur during the effective period of the welfare rate:

(i) Future changes according to labor contracts, board resolutions, written policies, or minimum wage laws.

(ii) Changes that are in effect as of the end of the fiscal period covered by the historical cost portion of the welfare per-diem rate.

(b) Changes in facilities or equipment.

(c) The annualized cost effect of complying with federal, state, or local laws and regulations and Department of Public Welfare announced policies on care or facilities.

(d) All taxes except for income taxes.

(e) Interest.

(f) Depreciation.

(g) Utilities and insurance.

(h) Rental payments pursuant to a written lease.

(i) Raw food cost increase computed initially by multiplying $1.20 times one-half the percentage increase

in the wholesale price index for raw food during calendar 1973. The initial increase is $.14. For reports covering periods ending December 31, 1974 or later, this cost increase shall be calculated as follows:

(i) Calculate the percentage increase in the wholesale price index for raw food for the period December through November.

(ii) If the increase is greater than that computed for the prior year, add the difference to (i).

(iii) If the increase is less than that computed for the prior year, subtract the difference from (i).

(iv) Multiply one-half of the resulting figure times the sum of $1.20 plus all of the annual increases allowed pursuant to this section.

(j) Unidentified cost increases equal to changes in the annual percentage increase in the consumer price index in Minneapolis-St. Paul as published by the Bureau of Labor and Statistics, using the October indices (new series index 1976 equals 100) as applied to the historical cost portion of the facilities previous year's cost less those costs relating to areas where the facility is seeking specific allowances for known cost changes. In no case may the increase be applied against the historical cost of salaries, changes in facilities or equipment, property taxes, interest, depreciation, rental payments or food costs.

(2) Cost changes determined under this provision must be based upon facts and commitments in existence as of the original filing date of the report C.1.e.1. If the provider cannot substantiate that such facts and commitments did exist as of the filing date, the welfare rate will be subject to adjustment according to B.2.c. If known cost changes calculated under (a) through (h) above do not in fact occur, the welfare rate will similarly be subject to adjustment under B.2.c. If actual cost increases exceed the known cost changes determined under (a) through (i) above, no adjustment in welfare rate will be made.

2. Effective date, notifications and adjustments.

a. Effective date. A new per-diem rate determined by the Department will be effective the first day of the month following the provider's normal fiscal year-end except in instances in which penalty provisions of regulation C.1.f. are applicable. If the new rate results in a lower rate than the previous rate, the provider has 120 days from the original filing date in which to pay back any difference received during the period the new rate was to be effective. If the new rate results in a higher rate than the previous rate, payment shall be made to the provider within 45 days after receiving notification of the rate adjustment.

b. Rate notifications. A temporary rate notification consisting of the previous year's allowed historical cost per patient day plus 80% of the indicated allowed known cost changes per patient day will be issued and paid on receipt of the report. The temporary rate shall be limited by all maximums contained in Rule 49. Individual as well as overall maximums apply. The Commissioner will notify the provider in writing and the respective county welfare boards of the final rate determined under these regulations and the effective date of such rate. Included in the notification will be a detailed statement of the reason for any difference between the rate requested by the provider and the rate determined.

c. Adjustments for errors or omissions. All rates determined according to DPW Rule 49 may be subject to adjustment as a result of errors or omissions determined through audit of the provider's accounting and statistical records or by amended reports as provided by C.1.i. Such adjustments are limited to the three complete fiscal years preceding the date an audit commences. If the adjustment results in a payment from the provider to the county welfare board(s), the provider will have up to 120 days from the date the provider receives written notification of the adjustment. If the adjustment results in a payment to the provider, payment shall be made within 45 days after the date of receiving written notice of the adjustment.

3. Special rate setting procedures.

a. Newly constructed facilities.

(1) Required reports. Providers with newly constructed facilities may request an interim welfare rate. Providers who increase the facility's capacity by at least 50% may at their option be considered in this classification. The provider must submit reports as required in C.1.a. for the immediate future fiscal year forecast results.

(2) Report compliance. Reports will comply with all applicable sections of these regulations governing cost finding, reporting, and allowable costs to the extent feasible in the individual circumstances. Noncompliance with any provision of these regulations must be so stated together with the reason why the provider cannot comply.

(3) Interim rate establishment. The Commissioner will establish an interim rate in accordance with regu-

KEY: Existing rules are printed in standard type face. Proposed additions to existing rules are printed in **boldface**, while proposed deletions from existing rules are printed within [single brackets]. Additions to proposed rules are **underlined and boldfaced**, while deletions from proposed rules are printed within [[double brackets]].

lations B.1. retroactive to the first day a Medical Assistance recipient is placed in the home. Such rate shall be subject to retroactive upward or downward adjustment in accordance with all provisions of DPW Rule 49 except B.1.b. on the basis of first cost report covering actual results for the period in which the rate has been applied. Adjustments to the interim rate will be in accordance with B.2.a. and C.1.i.

b. Rates for lesser care levels in facilities without certification classification. Providers who provide care to welfare recipients requiring less care than the care level to which the provider is certified will receive a per diem rate as follows:

(1) ICF I care per diem rate in a skilled nursing-care facility will not exceed 85 per cent of the established skilled nursing-care rate for that facility except that facilities whose skilled rates are affected by B.4.c.(2) shall receive up to 85% of what their skilled rate would have been without application of B.4.c.(2).

(2) ICF II care per diem rate in an ICF I facility will not exceed 60 per cent of the established ICF I rate for that facility.

(3) ICF II care per diem rate in a skilled nursing-care facility will not exceed 50 per cent of the established skilled nursing-care rate for that facility.

This provision shall be applied in conjunction with C.3.c.(2).

c. Private room rate. A private room rate of 115 per cent of the established welfare per diem rate for the applicable care level in an individual home shall be allowed for a Medical Assistance recipient when deemed a medical or other necessity for the individual patient or as the patient's condition affects others; such condition must be determined by the attending physician and approved by the county welfare board. This provision, together with the provisions of D.8.d. shall apply only to facilities applying for a Certificate of Need after August 15, 1972.

d. Care classification additions. Providers who add certified care classifications may file an amended report under C.1. that includes known cost changes associated with care classification additions to obtain a welfare per diem rate for care not previously provided. At the provider's option he may accept the lesser care rates under B.3.b. in lieu of filing reports according to this provision.

e. Election of flat rate for small providers. Providers with a capacity of less than 30 licensed beds may annually elect to receive a flat per diem rate for providing required care of welfare patients by filing a flat rate report in lieu of receiving a rate complying with reporting requirements of C.1. and otherwise being subject to provisions of DPW Rule 49. The flat rate for skilled, ICF I, and ICF IIfor each region or group of regions as defined in B.4.b. shall be the regional average rates as determined from filed reports before the maximum rate limitation and excluding rates for providers electing the flat rate. These rates will be adjusted annually through policy bulletins.

Such an election must be filed within reporting deadline provided by C.1.e. or be subject to penalty provisions of C.1.f. Such rates elected by providers will be in effect for one year.

f. Incidental welfare rate. Providers may elect to receive a flat rate under B.3.e. for care of welfare recipients if welfare recipients account for less than twenty per cent of the certified capacity of the home.

4. Rate limitations.

a. Limitation based on private pay rates or relevant federal or state laws and regulations. Notwithstanding any other provisions of these regulations, the established provider rates for nursing-home care will not exceed the normal provider's rate charged private patients for comparable nursing-care services. This rate limitation shall be applied when the welfare rate is anticipated to exceed the private pay rate for a comparable time period. Welfare rates may further be limited to federal **and state** laws or regulations that affect the Medical Assistance Program.

[b. Maximum rate. Individual welfare rates will be subject to a maximum of 125 per cent of regional average costs plus known cost changes exclusive of this limitation and flat rates under B.3.e. Regions will be those areas designated by the Governor for regional planning and economic-development purposes. Regions may be combined when deemed appropriate by the Commissioner as announced through policy bulletins. The regional averages will be calculated separately for proprietary, nonproprietary and hospital-attached facilities except the regional average costs for hospital-attached facilities shall be included in the regional average calculation for nonproprietary free-standing facilities. The maximum-rate limitations will be adjusted annually through policy bulletins. The regional averages will be determined by the Commissioner, using all available information from reports that indicate a fiscal-year end during a calendar year and will be applied to rates that become effective during the second succeeding calendar year. Facilities that have a noncalendar-year end and have been previously subject to the maximum rates may adjust the rates to the new maximum rates if previously justified by the reports.]

b. Maximum rate. Notwithstanding any other section of the rule which establishes allowable costs, welfare rates for each level of care in individual facilities will be subject to separate overall limitations on the cost

for items which directly relate to the provision of patient care to residents of nursing homes and those which do not directly relate to the provision of care. The initial overall limitations will be calculated on the basis of 125 per cent of regional average costs plus known cost changes in each of these categories exclusive of these limitations and flat rates under B.3.e. Cost of depreciation, real estate taxes, investment or capital allowance, interest, rent, and those costs reported as general administration on rule 49 cost reports shall be included in the maximum relative to indirect costs. All other cost items are included in the direct care maximum calculations.

Separate rate limits will be calculated for regions 11 and 3 as if they were one region and for all other regions as if they were one region. Regions will be those areas designated by the Governor for regional planning and economic-development purposes. The regional averages will be calculated separately for proprietary, non-proprietary and hospital-attached facilities except the regional average cost for hospital-attached facilities shall be included in the regional average calculation for non-proprietary free-standing facilities. The maximum-rate limitations will be adjusted effective January 1 of each year as determined by the Commissioner using all available information from reports that indicate a fiscal year end during a calendar year and will be applied to rates that become effective during the second succeeding calendar year.

Facilities which have a non-calendar year-end and have been previously subject to the maximum rates may adjust rates to the new maximum rates upon computation of new maximum rates each year, if justified by cost reports previously filed. This provision of the rule is effective for rates paid on the first day of the month following adoption of the provision.

c. Maximum rate exceptions.

(1) Welfare per diem rates in excess of the maximum rate limitation will be allowed in the initial year to the extent that the welfare rate requested includes cost increase required to increase wages to the minimum standards of federal or state wage laws.

(2) Provision B.4.b. will not apply to homes that qualify for exception under D.8.i.(3) or facilities licensed under DPW Rule 80.

(3) Provision B.4.b. will not apply to providers with newly constructed facilities or providers who increase the facility's capacity by 50 per cent for the first two immediate fiscal years.

(4) A welfare per-diem rate component in excess of either of the maximum rate limitations contained in B.4.b. will be allowed to the extent of 85 percent of the first $2.00 per patient day over the maximum welfare rate when total allowable costs are divided by actual patient days or 93 percent of total capacity patient days, whichever is greater provided that in no event shall this section affect a per-diem rate by more than $1.70.

(5) Provision B.4.b. will not apply to those salary cost changes which exceed 6% of the historical salaries if the salary cost changes are reasonable and are required to bring facility salaries to the salary range of comparable facilities. The salary cost changes for top management compensation are excluded from this exception.

d. Minimum rate. The minimum welfare per diem rates will be 75 percent of the regional average as defined in B.4.b.

5. Appeals procedures.

a. Scope of appeals procedures. These procedures describe the manner by which unresolved individual provider or county welfare board disputes that may arise concerning application of these regulations excluding regulation B.5. will be settled. Unresolved disputes are defined as those disagreements which cannot be resolved informally between the provider and the Department staff normally assigned responsibility for administration, or the provider and a county welfare board.

b. Time limit. The provider, or the county, has 30 days to appeal from the date of the Department's notification of the new per-diem rate. Appeals will be heard by a Hearing Examiner of the Office of Hearing Examiners and will be according to rules of that office in addition to the provision of this rule.

[c. Effective date of resolved disputes. If the dispute is related to a change in the provider's rate, the new per-diem rate will prevail until final determination according to these appeal procedures is made. The total dollar amount due the provider or the Department resulting from the resolved disputes will be subject to payment provision of B.2.c.]

c. Effective date of resolved disputes. If the dispute is related to a charge in the provider's rate when

KEY: Existing rules are printed in standard type face. Proposed additions to existing rules are printed in **boldface**, while proposed deletions from existing rules are printed within [single brackets]. Additions to proposed rules are **underlined and boldfaced**, while deletions from proposed rules are printed within [[double brackets]].

determined according to desk audit and rate notification of section B.2.b., the new per-diem rate with retroactive adjustment for the prior issuance of a temporary rate of section B.2.b. or the interim rate of section C.1.c. will be effected prior to final determination according to these appeal procedures. If the dispute is related to a change in the provider's rate(s) as the result of field audit according to sections B.2.c. and C.1.g. or as the result of a lack of implementation of known cost changes according to section B.1.c.(2)., the total dollar amount due the program or the provider resulting from the resolution of the appeal will be subject to the payment provision of section B.2.c.

C. Reports.

1. General reporting requirements and submittal procedures.

a. Required reports. Except as provided by B.3.e. and f. to receive a per diem rate for providing care to welfare recipients, the provider must submit reports covering the provider's normal fiscal year conforming to the uniform accounting system defined in forms supplied by the Department. Reports, supporting documentation, and worksheets will consist of the following:

(1) General provider information and statistical data.

(2) Financial statements consisting of a comparative balance sheet, statement of changes in equity, and comparative statement of earnings or operations.

(3) Reports of historical costs and known cost changes together with supporting calculations and worksheets.

(4) Rate-determination worksheets.

(5) Other relevant data may be required by the Commissioner to support a welfare rate request. If such data are not provided within 30 days, the Commissioner must calculate a rate, making whatever assumptions deemed appropriate to arrive at the rate in the absence of the requested data.

(6) A complete statement of fees and charges.

(7) The names of all persons other than mortgage companies owning any interest in the facility including stockholders with an ownership of ten percent or more of the facility.

(8) Required reports will include audited balance sheet and statement of revenues and expenses. This provision of the rule is effective for the cost reporting period ending on the last day of the month during which this provision of the rule is adopted.

Specific report formats and preparation instructions will be contained in a provider manual prepared and revised periodically by Department personnel. Copies of said manual will be made available to all interested parties through the Documents Section of the Department of Administration. Newly established providers or providers who change their fiscal year must file short-period reports if the period covered is more than five months.

b. Method of accounting. The accrual basis of accounting in accordance with generally accepted accounting principles shall be the only method acceptable for purposes of satisfying reporting requirements. In a unique situation, such as the use of government providers, the use of the accrual basis of accounting may not be applicable. In such an instance, the Commissioner may permit the provider to use a cash or modified cash basis of accounting if the provider can establish that no difference in rate would result.

c. Records. The provider, [where applicable,] will maintain statistical and accounting records to support information in no less detail than that required by C.1.a. required reports **for at least three years following submission of a cost report.** The provider shall also make available federal and state income tax returns upon request of Department personnel.

d. Report certification.

(1) Reports required in regulation C.1.a. will be accompanied by a certification of (a) the majority owner defined as the person having over 50 percent effective ownership, or the chief financial officer if there is no majority owner, and (b) the administrator or the chief operating executive. If reports have been prepared by someone other than the above individual, a separate statement signed by the preparer shall be included stating the terms of the preparer's employment.

(2) If the provider has either audited or unaudited financial statements prepared by an independent public accountant, such statements must be submitted as a part of reports required by C.1.a.

e. Reporting deadlines and extensions.

(1) Deadlines. Required reports shall be submitted directly to the Department within three calendar months after the close of the provider's normal fiscal year. A final rate will be established within 30 days of receipt by the Department of complete and accurate reports and required documentary information.

(2) Inadequate reports. The Department may re-

ject any report that is incomplete or inaccurate within 30 days of receipt. In such case, the Department will establish a temporary rate in accordance with B.2.b. to be paid until the information is completely and accurately filed.

(3) Report deadlines exceptions. The Commissioner may grant exceptions to the reporting deadline for just cause. A routine extension of 60 days will be granted when a written request is received by the Department prior to the reporting deadline.

f. Penalties.

(1) Report preparation and submittal. The penalty for non-compliance with Regulation C.1.a. and C.1.e. will be to reduce the reimbursement rate to 80 percent of the rate then in effect on the first day of the fourth calendar month after the close of the provider's normal fiscal year. This penalty is not to apply for minor errors and omissions on reports. If the required reports are subsequently submitted, retroactivity of the established rate will be limited to the first day of the month following the month in which acceptable reports are received, unless retroactivity to a prior date is otherwise designated by the Commissioner.

(2) False reports. Incorrect or false information supplied by the provider on required reports resulting in overpayments to the provider will result in one or more of the following:

(a) Immediate adjustment of the welfare rate, along with retroactive recovery by the county welfare board of funds incorrectly paid to the provider.

(b) Termination of the provider contractual agreement.

(c) Prosecution under applicable federal and Minnesota statutes.

g. Audits. All reports will be subjected to desk audit and **at least every three years will** [may] be subjected to field examination of supporting records and compliance with regulations by state and federal auditors or auditing firms under contract to the state. If such audits reveal inadequacies in provider record keeping and accounting practices, the Commissioner may require that the provider engage competent professional assistance to properly prepare required reports. Penalties of C.1.f.(1) or (2) may be applied to ensure compliance with this provision.

h. Application of reasonable cost principles. Reports required by C.1.a. must be prepared in accordance with reasonable cost principles in Section D.

i. Amended reports. Except as provided in B.1.c.(2) providers may file amendments to previously filed reports when errors or omissions are uncovered or when federal or state minimum wage laws changes occur unexpectedly or when long term labor contracts expire and are renegotiated subsequent to the reporting deadline in C.1.e.(1). The cost change omissions to comply with minimum wage law changes or labor contracts will be limited to the wage increases required to meet the minimum standards of federal or state wage laws or reasonable labor agreements. Such changes in the welfare per diem rate must result in at least a five cent per patient day or $2,000 adjustment, whichever is less, for each annual period. The payment and period covered by this provision are governed by B.2.c.

2. Special provisions for multi-home providers and providers involved in other activities.

a. Reporting exceptions. Providers who operate several homes or who are engaged in activities other than nursing care may not be able to comply with the required reports referred to in C.1.a. In that case, the provider must indicate reasons for noncompliance.

b. Charges from related organizations. Cost applicable to services, facilities, and supplies furnished to the provider by organizations related to the provider by common ownership or control are includable in the allowable cost of the provider at the cost to the related organization. If the related organization in the normal course of business sells services, facilities or supplies to the outsider, the cost to the provider shall be the outsider's price; however, sales to outsiders must constitute at least 25 per cent of its sales.

c. Cost allocation of top-management salaries and management fees. The allocated portion of compensation for the chairman of the board, directors, presidents, or other similarly titled individuals allocated to an individual nursing home shall be subject to the limitation provided in regulation D.3.a. Other corporate charges or costs allocated to a nursing home must represent the cost of services actually rendered and be identified as to the type of service provided.

3. Definitions.

a. Care definitions. The following care classifications are used in cost reporting required by these regulations. The definitions of these terms included in DPW

KEY: Existing rules are printed in standard type face. Proposed additions to existing rules are printed in **boldface**, while proposed deletions from existing rules are printed within [single brackets]. Additions to proposed rules are **underlined and boldfaced**, while deletions from proposed rules are printed within [[double brackets]].

Rule 47 and appropriate federal regulations governing Title XIX are hereby adopted.

(1) Skilled Nursing Home (Skilled)

(2) Intermediate-Care Facility I (ICF I)

(3) Intermediate-Care Facility II (ICF II)

b. Cost categories. Costs used for rate-setting purposes and related to patient care are to be grouped according to major cost categories used in required reports. Such categories are defined as follows:

(1) Nursing. All directly identifiable costs associated with nursing care defined in Section C.3.a. In general, these include bedside care; administration of medications, irrigations, and catheterizations; application of medications, dressings, or bandages; rehabilitative nursing techniques; and definition of modified diets, as well as other treatments prescribed by a physician that require professional or technical knowledge, skills, and judgment as possessed by a professional nurse. Included are comfort medications, medical supplies, devices, and other routine supplies not separately reimbursed as listed in Regulation C.3.b.(8). Personnel costs to be included in nursing are the salaries of the director of nursing, supervision nurses, registered professional nurses, licensed practical nurses, nurses aides, orderlies, and attendants (ICF II care only). The salaries or fees of physicians performing consulting services not reimbursed by separate fee schedule are also to be included in this cost category.

(2) Dietary. All directly identifiable costs of normal and special diet food including food preparation and serving. Personnel costs to be included in dietary are the salaries of dieticians, chefs, cooks, dishwashers, and all other employees assigned to the kitchen and dining room.

(3) Laundry and linen. All directly identifiable costs of linen and bedding, laundering, and laundry supplies. Personnel costs to be included in laundry are the salaries of laundry employees, seamstresses, laundrymen, and ironers.

(4) Housekeeping. All directly identifiable costs of housekeeping, including cleaning and lavatory supplies. Personnel costs to be included are the salaries of housekeepers, maids, and other cleaning personnel.

(5) Plant operation and maintenance. All directly identifiable costs for maintenance and operation of the buildings and grounds, including fuel, electricity, water, supplies and parts to repair and maintain equipment and facilities, and tools. Personnel costs to be included are the salaries of engineers, painters, heating-plant employees, plumbers, electricians, carpenters, and watchmen.

(6) Other care-related services. All directly identifiable costs of other services, such as recreational activities, religion, rehabilitation, arts and crafts, and social services.

(7) General and administration. All directly identifiable costs for administering over-all activities of the facility, including business-office functions, travel expense, motor vehicle operating expense, telephone charges, office supplies, advertising, licensing fees, and professional services. Personnel costs are the salaries of administrators, assistant administrators, accounting personnel, and all clerical personnel. Also included in administration are fringe benefit costs of all employees, such as employment taxes, health insurance, pensions, and life insurance; also included are other costs not otherwise classified under definitions in C.3.b.

(8) Miscellaneous nonreimbursable services and expenses.

(a) All directly identifiable costs of functions normally reimbursed by charges to patients, employees, or outsiders, such as the operating costs of a pharamcy, beauty shop, or coffee and gift shop are included here.

(b) Also included are specific costs that may be incurred by the provider and reimbursed separately according to a fee schedule. These include but are not limited to the following:

(i) Services provided by licensed medical, therapeutic, or rehabilitative practitioners.

(ii) Oxygen at prevailing prices.

(iii) Wheel-chair alterations for specific Medical Assistance recipients.

(c) Also included in this section will be costs associated with operating activities financed by gifts or grants from private or public funds.

(d) All costs classified in C.3.b.(8) are *not* allowable for purposes of determining a per diem rate under these regulations.

c. Patient days.

(1) General definition. For purposes of determining a per diem rate, a patient day is defined as a day for which full and normal billings were rendered.

(2) Special care rates. Facilities that provide care to a patient requiring less care than the care level to which the facility is certified may adjust lesser-care patient days for rate-calculation purposes as follows:

Level of Care Provided	Cerification	
	Skilled	ICF I
Skilled	1.00	N/A
ICF I	.85	1.00
ICF II	.50	.60

The lesser care patient day adjustment cannot exceed 15 per cent of actual patient days. This limitation may be waived temporarily to accommodate a transition period during which the provider obtains the proper facility certification.

4. Cost allocation procedures.

a. General provisions for all providers.

(1) Costs will be classified in accordance with categories defined in Regulation C.3.b. and, if applicable, by care level defined in Regulation C.3.a.

(2) Classification of costs to cost categories C.3.b. will involve one or more of the following steps;

(a) Direct identification, without allocation, which will be accomplished in the routine classification of transactions when costs are recorded in the books and records of the provider.

(b) In instances in which individuals have multiple duties, the person's salary cost will be allocated to categories C.3.b. on the basis of management's estimate of time spent on various activities. This procedure will not be applied to administrators or other chief executives' salaries in facilities with 60 or more licensed beds.

(c) Other costs that cannot be classified to cost categories through use of procedure C.4.a.(2)(a) and C.4.a.(2)(b) will be classified in the administrative category.

(3) Adjustments for costs otherwise reimbursed. Recorded costs will be reduced for costs related to other activities not subject to rate determination as defined in Regulation C.3.b.(8).

(4) Non-allowable cost adjustments. Recorded costs will be adjusted when such costs exceed reasonable cost principles defined in section D of these regulations. All adjustments will be footnoted with the applicable regulation number. Costs previously excluded by C.3.b.(8) will not require further adjustment.

b. Specific care level allocation procedures for multi-level providers. Cost allocation procedures are necessary to determine costs among different care level facilities. Allocation procedures are defined in the following sections and will be applied in the order stated except where noted otherwise. Regardless of method selected, a reasonable identification of costs to care level must result.

(1) Nursing care. Any combination of allocation procedures (a), (b), and (c) below can be used as long as the result is a reasonable approximation of actual costs incurred by care level.

(a) Direct identification (without allocation) in the routine classification of transactions when costs are recorded in the books and records of the provider (e.g., invoice and time record account classifications).

(b) Cost allocation on the basis of regularly validated time or cost studies.

(c) Remaining costs (e.g., nursing supervisor, supplies, etc.) not classified under methods (a) or (b) above will be allocated on the ratio of costs identified to care levels (using (a) and/or (b) above), one care level to another.

(d) If methods (a), (b), or (c) above cannot be used, costs will be allocated on the basis of actual patient days weighted by the ratio of maximum allowable nursing care and attendant hours as defined in Regulation D.2.

(2) Dietary.

(a) Cost allocation on the basis of regularly validated time or cost studies.

(b) Cost allocation based on the number of meals served.

(c) Cost allocation based on the actual patient days.

(3) Laundry and linen, housekeeping, and plant operation and maintenance. The following allocation procedures can be applied to individual department costs or the combination of these three departments at the option of the provider.

(a) Same as C.4.b.(1)(b), time or cost studies.

(b) Allocation on the ratio of square feet of floor space devoted directly to each care level.

(c) Same as C.4.b.(1)(c), patient days.

KEY: Existing rules are printed in standard type face. Proposed additions to existing rules are printed in **boldface**, while proposed deletions from existing rules are printed within [single brackets]. Additions to proposed rules are **underlined and boldfaced**, while deletions from proposed rules are printed within [[double brackets]].

(4) Other care related services.

(a) Same as C.4.b.(1)(b), time or cost study.

(b) Same as C.4.b.(1)(c), patient days.

(5) General and administration. Cost allocation and the ratio of the combined cost by care level determined for categories C.4.b.(1) through (4) and (6).

(6) Depreciation, interest and real estate and personal property taxes.

(a) Location of equipment when determinable.

(b) Same as C.4.b.(3)(b), square feet.

(c) Same as C.4.b.(2)(c), patient days. This allocation procedure must be used if actual patient days in any care level exceeds certified capacity patient days.

(7) Earnings allowance. Cost allocation on the ratio of the combined cost by care level determined for categories C.4.b.(1) through (4) and (6).

c. Hospital attached facilities. The nursing care limitation under D.2.a. and the investment per bed limitation under D.4.b.(1) will be waived when the Medicare cost allocation factors result in these limitations being exceeded. Costs between hospitals and attached facilities must be allocated by the "Medicare Worksheet B" using Medicare allocation factors for the following three cost groups:

(1) All expense classifications without depreciation, administration and general.

(2) Depreciation.

(3) Administration and general.

D. Reasonable cost principles.

1. General provisions.

a. Reasonable costs. Costs to be allowable for rate setting purposes must satisfy the following over-all criteria:

(1) They must be necessary and ordinary costs related to patient care.

(2) They must be costs that prudent and cost-conscious management would pay for a given item or service.

b. Costs not allowable. Costs that relate to management inefficiency, unnecessary care or facilities, and activities not common and accepted in the nursing care field are not allowable.

c. Reasonable compensation. Reasonable compensation of individuals employed in the facility is an allowable cost, provided the services are actually performed in a necessary function and the costs reported are actually incurred. To be reasonable the compensation allowance must be such an amount as would ordinarly be paid for comparable services by comparable facilities. To be necessary the function must be such that had the individual not rendered the services, the facility would have had to employ another person to perform the services. The function must also be pertinent to the operation and conduct of the facility. Where the services are rendered on less than a full-time basis, the allowable compensation should reflect an amount proportionate to a full-time basis. Compensation shall include payment to individuals as well as to organizations of non-paid workers that have arrangements with the provider for the performance of services by non-paid workers.

d. Substance over form. The cost effect of transactions that are conceived for the purpose of circumventing the regulations contained in DPW Rule 49 will be disallowed under the principle that the substance of the transaction shall prevail over form.

e. Costs due to changes in federal or state requirements. Costs incurred to comply with changes in federal or state laws and regulations on increased care and improved facilities are allowable costs for purposes of determining a historical per-diem rate under B.1.a.

f. Reduction in costs. Purchase discounts, allowances, and refunds are a reduction of the cost of whatever was purchased.

g. Annual review of cost limitations. The Commissioner shall review annually the dollar limitations for top management compensation limitation D.3.a. and depreciation basis limitation D.4.b. and adjust the limitations accordingly if justified by current data. The data used as a basis for this determination shall be made available to all providers.

h. Application of principles and specific limits. The reasonable cost principles defined in D.1. apply to all reported costs and have been specifically defined for certain cost elements in D.2. through D.8.

2. Nursing care and attendant limitations.

a. Nursing care. Nursing care costs will be limited by a maximum number of nursing hours per patient day as follows:

Skilled: 2.9 hours
ICF I: 2.3 hours

If the actual average nursing hours per patient day exceed the above limit, the reasonable cost limitation will be calculated by multiplying the ratio of the above stated limit to the average actual nursing hours per patient day for the year times the actual cost per patient day. This limitation will not apply to facilities that qualify for exception under D.8.d.(3), or facilities licensed under DPW Rule 80, **or facilities mandated by a correction order from the Department of Health to provide additional nursing care.**

b. Attendants (ICF II facilities only). Reasonable costs for attendants in ICF II faciliites will be limited to one hour per patient day. If the actual average attendant hours per patient day exceeds this limit, the reasonable cost limitation will be calculated by multiplying the ration of the stated limit to the average actual attendant hours per patient day for the year times the actual cost per patient day.

3. General and administrative expenses.

Reasonable cost criteria for general and administrative expenses are as follows:

a. Top management compensation limitation. Top management compensation includes that of owners, administrators, president, chairman of the board, board members, or other individuals receiving compensation as executives but not performing duties of a department head. Compensation includes the costs of non-cash compensation such as residences, salaries, and deferred compensation except IRS qualified pension or profit sharing plans. The average annual cost limitation for rate-setting purposes on compensation is determined according to the average number of combined licensed nursing-home and boarding-care beds according to the following schedule:

Number of Beds	Cumulative Annual Compensation Per Bed Limitation
First 50	$264
Next 51-100	132
Over 100	66

The minimum compensation limitation is $10,000 or actual compensation, whichever is less, and the maximum shall be $35,000. For each full percentage point increase in the consumers price index in Minneapolis-St. Paul as published by the Bureau of Labor and Statistics for the months October, 1973, and October, 1974, new series index (1967=100), the accumulation annual compensation per paid limitation listed above shall be increased by one percent. The increase, if any, generated by this formula shall be effective in January 1, 1975. Similar calculations shall be made for each successive year using the October indices for two successive years with the increases beginning effective the following January.

b. Assistant administrator. Reasonable compensation of assistant administrators is not subject to the limitation in D.3.a.

c. Other management services. The costs of other directors' fees, unidentified management fees, and physician compensation for performing administrative functions are allowable to the extent that such costs together with compensation of top management do not exceed the limitations defined in D.3.a.

d. Other general and administrative costs.

(1) Owners life insurance. The costs of premiums are not allowable.

(2) Personal expenses. Personal expenses of owners or employees, such as homes, boats, airplanes, vacation expenses, etc., are not allowable costs. The costs of residences for administrators and key staff are allowable costs if such costs together with other compensation do not exceed the limitations of D.1.c. and D.3.1.

(3) Professional, technical, or business-related organizations. These costs are allowable if their function and purposes can be reasonably related to the development and operation of nursing facilities, patient-care facilities, and programs for the rendering of patient-care services.

(4) Social, fraternal, and other organizations. Cost incurred in connection with membership in all organizations not included in D.8d.(3) are not allowable.

(5) Travel and automobile. These expenses are not an allowable expense unless they are related to activities of managing the nursing home.

(6) Entertainment. These expenses are not allowable costs.

(7) Pension and profit-sharing plans. Contributions to either an Internal Revenue Service approved pension or profit-sharing plan, but not both, are allowable costs.

(8) Employee education costs, orientation, and on-the-job training. Costs relating to providing improved patient care or, where required by state law, are allowable

KEY: Existing rules are printed in standard type face. Proposed additions to existing rules are printed in **boldface**, while proposed deletions from existing rules are printed within [single brackets]. Additions to proposed rules are **underlined and boldfaced**, while deletions from proposed rules are printed within [[double brackets]].

costs. If part or all of these costs are reimbursed by private or public funds, only the excess of cost over reimbursed funds are allowable costs. All such costs should be included in respective cost categories, C.3.b. unless not identifiable.

(9) Training programs for non-employees. Costs of training programs conducted for non-employees other than for volunteers are not allowable.

(10) Telephone, television, and radio service. These are allowable costs where furnished to the general patient population in areas of provider day rooms, recreation rooms, lounges, etc. The cost of these services when located in a patient accommodation is not allowable.

(11) Noncompetitive agreement. Costs of these agreements are not allowable.

(12) Pre-opening costs. One time pre-opening costs of new facilities incurred prior to admittance of patients must be capitalized as a deferred charge. Costs in the form of amortization will be recognized as allowable costs over a period no less than 120 consecutive months beginning with the month in which the first patient is admitted for care. Examples of these costs are wages paid prior to the opening of the facility. Construction financing, feasibility studies, and other costs related to construction must be depreciated over the life of the building.

(13) Bad debts. Amounts considered to be uncollectible patient accounts are not allowable costs.

(14) Fund-raising costs. Costs incurred for such purposes including advertising, promotional, or publicity costs are not allowable in the year in which they are incurred except in the form of amortization as allowed by D.6.a.

(15) Charitable contributions. These are not allowable costs.

(16) Other general and administrative costs. As provided in Minn. Stat. § 256B.47, subd. 2, the following shall not be recognized as allowable costs **unless otherwise noted**:

(a) Political contributions. **Political contributions made by a health care facility or institution shall not be recognized as allowable.**

[(b) Salaries or expenses of a lobbyist as defined in Minn. Stat. § 10A.01, subd. 11, for lobbying activities.]

(B) Salary of a lobbyist. The salary of an individual in the employ of a facility shall be allowed for lobbying activities as defined in Sec. 10A.01, Subd. 11 only if the lobbying activity is incidental to the individual's job functions and if such lobbying directly relates to the licensed functions of the facility.]

[(c) Advertising designed to encourage potential residents to select a particular home.]

(c) Advertising. Reasonable Yellow Pages listings, brochures, flyers, newsletters and other similar items which are primarily designed to describe the services, licensure, accreditation, staffing, and other similar matters concerning the facility are allowable costs.

(d) Assessments levied by the Health Department for uncorrected violations. **Assessments levied and collected by the Minnesota Health Department shall not be recognized as allowable costs.**

[(e) Legal fees for unsuccessful challenges to decisions by state agencies.]

(e) Legal fees. Fees incurred in unsuccessful legal challenges where a government agency is a party to the suit are not directly related to patient care and will not be allowed. A legal action is unsuccessful to the extent that the nursing home does not demonstrate it clearly prevailed on the issues litigated. Legal challenges include, but are not limited to, appeals regarding rates, licensure, and certification at all levels as well as direct court challenges.

[(f) Due paid to a nursing home or hospital association.]

(f) Association dues. Association dues are allowable only if they directly relate to patient care. For purposes of this section, directly related to patient care means activity which the nursing home clearly demonstrates is a necessary part of the licensed or certified function of the nursing home or directly leads to improved quality of care or improved administrative operations.

Each association for which dues are claimed as an allowable cost must file annually with the department a statement summarizing its activities, its revenues generated by dues and its expenditures of funds received from dues payments. The percentage (up to 100%) of dues revenue which the association expends for direct care purposes as defined above will be allowed during the next year. The statement must be filed within 30 days of the end of the association's fiscal year except that in order for dues to be allowable effective September 1, 1977 each association must file such a statement by October 1, 1977 covering its most recently completed fiscal year. No expenditures by an association which would be unallowable for rate setting purposes will be considered

directly related to patient care. This provision of the rule is effective for rates paid on September 1, 1977.

4. Depreciation.

a. Basis for depreciation calculation.

(1) Cost. Historical cost of nursing facilities shall be the basis for calculating depreciation as an allowable cost, except as provided by D.4.a.(2).

(2) Change in ownership of facilities. In a case in which a change in ownership of a nursing-home facility occurs, and the new owner's investment is greater than the old owner's investment, if a bona fide sale is established by the new owner, the basis for depreciation will be adjusted as follows:

(a) In the case of a complete change in ownership, the basis for calculating depreciation will be the lower of:

(i) The portion of the purchase price properly allocable to depreciable nursing home facilities; or

(ii) The appraised value of the depreciable nursing home facilities calculated under the replacement cost, depreciated method.

(b) In the case of a partial change in ownership, as defined below, the basis for calculating depreciation shall be determined according to provision of D.4.a.(2)(a) the case of a complete change in ownership except that all relevant figures will be placed on a scale proportionate to the percentage of ownership change. For purposes of this provision, a partial change in ownership occurs only in the case of an organization with ten or fewer owners, after the change in ownership, and when the ownership change exceeds 20 per cent. Any increase allowed by this section will then be adjusted according to section D.4.a.(6).

(3) Redemption of ownership interests. In a case in which the remaining owners establish the fact that a bona fide redemption of an ownership interest has occurred, the basis for calculating depreciation will be increased by the excess, if any, of the redemption price over the former owner's investment. The adjusted basis shall be determined by applying the provision of D.4.a.(2)(b).

(4) Donated assets. The basis of donated assets, except for donations between providers or related parties, shall be fair market value defined as the price that an able buyer would pay a willing seller in an arms-length sale or appraised value defined in D.4.a.(2)(a)(ii) whichever is lower. An asset is considered donated when the provider acquires the asset without making any payment for it in the form of cash, property, or services. In the instance of the exception stated, the net book value to the donor shall be the basis for the donee.

(5) Subsequent acquisitions. The basis for calculating depreciation may be increased for the actual cost of equipment additions or facility modification or renovation.

(6) Recapture of depreciation resulting from sale of facility. The sale of depreciable nursing home property, or substantial portion thereof, at a price in excess of the cost of the property as reduced by accumulated depreciation calculated in accordance with D.4 indicates the fact that depreciation used for purposes of computing allowable costs was greater than the actual economic depreciation.

(a) The amount of the recapture will be determined as follows:

(i) The gross recapture amount will be the lesser of the actual gain on the sale or the depreciation after the effective date of DPW Rule 49 (November 1, 1972).

(ii) The gross recapture amount as determined in (i) above shall be allocated to fiscal periods from November 1, 1972, through the date of sale. The gross recapture amount shall be allocated to each fiscal period in the same ratio as depreciation amounts claimed under DPW Rule 49. The amount allocated to each period shall be divided by the total actual patient days in that period, thereby determining a patient-day cost for the period. The total net recapture shall then be determined by multiplying the actual welfare days times the patient-day cost for each fiscal period.

(iii) The total net recapture amount determined according to (ii) above will be reduced by one per cent for each month of ownership since the date of acquisition of the facility. The net recapture paid to the State of Minnesota is includable in the new owner's basis for depreciation subject to the provisions of D.4.a.(2).

(b) The net recapture amount so determined in (iii) above will be paid by the new owner to the State of Minnesota within a time period agreed to by the Commissioner and the new owner. The time period should effectuate an orderly payment schedule and must not exceed two years after the date of sale.

(7) Gains and losses on disposition of equipment. Gains and losses on the sale or abandonment of equipment

KEY: Existing rules are printed in standard type face. Proposed additions to existing rules are printed in **boldface**, while proposed deletions from existing rules are printed within [single brackets]. Additions to proposed rules are **underlined and boldfaced**, while deletions from proposed rules are printed within [[double brackets]].

can be included in computing allowable costs. A gain shall be an offset to depreciation expense to the extent that such gain resulted from depreciation reimbursed under these regulations. Gains or losses on trade-ins should be reflected in the asset basis of the acquired asset. Losses will be limited to five cents per patient day annually; however, any excess over this limitation can be carried forward to future years.

b. Limitations.

(1) The total basis of depreciable nursing facility assets shall not exceed an average of $13,000 per bed for licensed beds in two or more beds per room and $19,500 per bed for licensed private rooms built or purchased after January 1, 1974. This limitation will be adjusted annually beginning January 1, 1975 according to a construction index as determined by the Commissioner. The depreciable basis for licensed beds built or purchased prior to January 1, 1974 shall not exceed an average of $11,000 per bed for licensed beds in two or more beds per room and $16,500 per bed for licensed private room which satisfy the certificate of need provision of B.3.c. However, the depreciable basis for licensed private rooms built prior to August 15, 1972 shall not exceed an average of $16,500 per bed for a maximum of 5% of licensed beds.

(2) In no instance can accumulated depreciation calculated in accordance with D.4 exceed the basis defined in section D.4.a.

(3) Accumulated depreciation as of the beginning of the first fiscal year covered by this regulation shall be calculated retroactively using the useful life concept defined in sections D.4.c. and D.4.d.

(4) Regardless of the applicability of the limitation stated in D.4.b.(a) above, depreciation on investments in facility modifications and new equipment will be allowed if they were required by governmental requirements.

c. Depreciation rates for new facilities and equipment. Depreciation shall be calculated using the basis determined under section D.4.a. applying one of the "useful life" schedules defined in section D.4.c.(1) or D.4.c.(2)

(1) Building: 35 years

Major building improvements (depreciated over the remaining life of the principal asset or useful life, but not less than 15 years).

Land improvements: 20 years

Equipment: 10 years

Vehicle: 4 years

(2) American Hospital Association depreciation guidelines.

(1) Depreciation rates for used facilities and equipment. The useful life shall be assigned by the provider considering the individual circumstances; however, the useful life will not be shorter than one-half of the useful life provided by sections D.4.c.(1) or D.4.c.(2).

(2) Leasehold improvements. The useful life of the improvement or the remaining term of the lease, including renewal periods, shall be used, whichever is shorter.

e. Depreciation method. The straight-line method of depreciation should be used except, at the option of the provider when the principal payments on capital indebtedness (as defined in section D.6.a.(1) exceed the total depreciation allowance calculated in accordance with section D.4. In such instances, depreciation may be increased to equal principal payments on capital indebtedness amortized over actual amortization periods; however, the amortization period cannot be less than 20 years for building and six years for equipment. Accumulated depreciation cannot exceed the basis defined in section D.4.a. Depreciation on any new construction or expansion of facilities commenced on or after January 1, 1977, other than governmentally owned facilities, shall be on a basis of not less than 30 years. For facilities constructed or expanded prior to January 1, 1977, and for facilities purchased after January 1, 1977, presently existing depreciation rules will apply.

f. Facilities financed by public funds. Depreciation will not be allowed on the portion of facilities financed by federal, state or local appropriations or grants unless the intent of such appropriation or grant was that to be repaid through operating revenue of the facility. **This limitation will not apply to governmentally owned nursing homes.**

g. Non-depreciable assets. Nursing facility assets that are not depreciable include but are not restricted to:

(1) Land. Includes the land owned and used in provider operations included in the cost of land and the costs of permanent roadways and grading of a non-depreciable nature, the cost of curbs and sidewalks whose replacement is not the responsibility of the provider, and other land expenditures of a non-depreciable nature.

(2) Goodwill. Includes amounts that result from purchase of property or stock in excess of determinable value as determined in D.4.a.(2).

h. Capitalization vs. expense. Expenditures for equipment that has a useful life of more than one year shall be capitalized except that the provider may show as expenses small equipment purchases normally capitalized if

such items do not exceed two cents per patient-day annually.

5. Leased facilities or equipment.

a. Rental charges. Reasonable rental charges incurred by a provider through a lease entered into an arms length transaction are includable in allowable costs. Unless:

(1) Rental charges result from a sale, lease-back arrangement, or lease with option to buy at a price less than anticipated value.

(2) Rental charges are paid to a related or controlled organization. If either D.5.a.(1) or (2) exists, the provisions of D.5.b. will be applied.

b. If rental charges are not allowed, the rate of the provider will be determined as for any other provider as though the lease did not exist. In this case allowable costs would include both costs of the lessor and the lessee.

c. Limitation. Allowable rental charges are subject to the investment per bed limitations of D.6.b.(1)(a) determined by calculating the present value of lease payments exclusive of real and personal property taxes and other costs assumed by the lessor. Interest rates used in capitalizing lease payments shall be the mortgage rate of the lessor or, if the mortgage rate is not available, 2.15 percentage points above the interest rate of Federal Hospital.

Insurance Fund obligations as of the effective date of the lease. The formula for determination of this provision is as follows:

Present value of lease = Lease payment per period $\times$ present value factor per period

Investment per bed = Present value of lease $\div$ Licensed Beds

The present value factor can be determined from annuity tables according to the present worth of $1 per period for the term of the lease.

6. Cost of capital.

a. Interest.

(1) Except as provided in section D.6.a.(6) interest is an allowable cost for non-proprietary facilities only and will be classified as follows:

(a) Interest on capital indebtedness includes amortization of bond premium and discount and related financing costs. Capital indebtedness is defined as any loan that is applied to purchase fixed assets related to providing nursing care as defined in D.6.b.(1)(a). The form of indebtedness will include mortgages, bonds, notes, and debentures, when the principal is repaid over a period in excess of one year.

(b) Other interest for working capital and operating needs that directly relate to providing nursing care is an allowable cost. The form of indebtedness will include, but is not limited to, notes, advances, and various types of receivable financing the principal of which will be generally repaid within one year.

(2) Interest income will be a deduction from interest allowable under provision D.6.a.(1)(a) or D.6.a.(1)(b). Interest income on restricted funds will not be deducted from interest expense. Restricted funds are defined as all unexpended donated funds carried by the institution that are restricted for other than operating costs. The operating or building funds cannot be included as part of restricted funds for this purpose.

(3) Interest rate. The interest rate incurred must not be in excess of what a borrower would have had to pay in an arms-length transaction in the money market when the loan was made. When a non-proprietary provider borrows from its own restricted fund, interest paid by the general fund to the restricted fund is allowable at a rate not to exceed the interest rate the fund is currently earning. Interest on liens between operating and building funds is not allowable.

(4) Construction interest. Interest cost incurred during and related to construction must be capitalized as a part of the cost of the facility. The period of construction is considered to extend to the date the facility is put into use for patient care.

(5) After the first three years that a non-proprietary or governmentally owned nursing home has been owned by its current owners, the state agency shall not recognize as an allowable cost the expense of interest on net debt for any indebtedness and loans which exceed 100 percent of the net asset value of the facility. **Effective July 1, 1977, interest expense on indebtedness incurred prior to April 13, 1976, is exempted from this provision if the expense is allowable according to section D.6.a.(1).**

[(6) A proprietary nursing home which pays

KEY: Existing rules are printed in standard type face. Proposed additions to existing rules are printed in **boldface**, while proposed deletions from existing rules are printed within [single brackets]. Additions to proposed rules are **underlined and boldfaced**, while deletions from proposed rules are printed within [[double brackets]].

interest on capital indebtedness at an interest rate in excess of nine percent may be reimbursed for one-half of its interest expenses in excess of the nine percent up to 12 percent if (a) the proceeds of the indebtedness are used for the purchase or operation of the nursing home and (b) the interest rate is not in exces sof what a borrower would have had to pay in an arms-length transaction at the time the loan was made.]

(6) Interest expense for a proprietary nursing home will be allowable on capital indebtedness which has a rate of interest in excess of nine percent, but no more than twelve percent, if the indebtedness relates directly to the purchase of the facility or to working capital for the operation of the facility and if the rate of interest does not exceed a rate which a prudent and cost-conscious borrower would incur in an arms-length transaction.

b. Investment allowance.

(1) Determination of allowance. [Proprietary homes where cost reports are received after January 1, 1977, shall receive an investment allowance of nine percent of the original value of the facility for depreciation purposes. Non-proprietary homes whose fiscal year begins after June 30, 1977, shall receive an investment allowance of two percent of the original value.]

Proprietary homes where cost reports are received after January 1, 1977 shall receive an investment allowance of nine percent of the original value of the facility for depreciation purposes of section D.4.b.(1) plus one percent of the nine percent for each year of ownership not to exceed 11.25 percent of the original facility value. Non-proprietary homes shall receive effective July 1, 1977 an investment allowance of two percent of the original facility value plus one percent of the two percent for each year of ownership not to exceed 2.5 percent of the original facility value. Where additional beds are added to an existing bed complement according to section D.4.a.(2)(b), a separate computation for the ownership incentive will be required either for the additional beds with ownership years accruing from the date of licensure of those new beds or for the additional investment in fixed assets with ownership years accruing from the date of the change in ownership. The ownership incentive is effective for rates paid on August 1, 1977.

(2) For purposes of this section the following terms shall have the meaning given to them.

(a) Facility means the nursing home building and all permanent fixtures attached to it. **Fixtures mean property which is actually attached to the building so as to constitute a part thereof.** Facility does not include the land or any supplies and equipment which are not fixtures.

(b) Original value means the lesser of purchase price or appraised value at the time of purchase. Appraisals at the time of purchase shall be on the depreciated replacement cost basis. If a nursing home expands its facility or makes any other capital expenditure which increases the value of the facility, the cost of the expansion or capital expenditure shall be added to the original value. If the Department disputes the cost of the expansion or capital expenditure it may request an appraisal and use the appraised value as the allowed cost.

(3) Allowance for leased facilities. Leased facilities shall receive an investment allowance not to exceed the greater of $.35 per the facility's 93% capacity patient days or the investment allowance of section D.6.b.(1) for those fixed assets owned by the lessee facility.

7. Welfare. All directly identifiable costs associated exclusively with the welfare program and benefiting welfare patients exclusively will be calculated in a manner that results in an assignment of the incremental costs stated above wholly to welfare patients. Such costs may include reasonable expenditures for utilization review, preparation and processing of a cost statement under these regulations.

8. Facility utilization incentives.

[a. Capacity limitation. The allowable cost amount per patient day depreciation, interest, property taxes, administration and earnings allowance will be calculated by dividing such allowable costs by 93 percent of total capacity patient days for licensed beds. Facilities qualifying for the special care rate of III.C.3.b. may adjust the capacity limitation by the same formula. The capacity limitation cannot be reduced below 90 percent of total capacity patient days for licensed beds.]

a. Capacity limitation. The allowable cost amount per patient day for depreciation, interest, property taxes, administration and investment allowance will be calculated by dividing such allowable costs by 93 percent of total capacity patient days for licensed beds or actual patient days, whichever is greater. Facilities qualifying for the special care rate of C.3.c.(2) may adjust the capacity limitation by the same formula. The capacity limitation cannot be reduced below 90 percent of total capacity days for licensed beds. This provision of the rule is effective for rates paid on the first day of the month following adoption of the provision.

b. Calculation of patient days. For purposes of calculating patient days at 93 per cent of licensed capacity and to assign a greater proportion of costs to private rooms, a

factor of 1.5 times the number of licensed private beds will be used in determining the number of patient days. This provision shall apply only to facilities applying for a Certificate of Need after August 15, 1972.

c. Licensed bed capacity. Useable or operable bed capacity may be used for purposes of the calculation required by D.8.a. and b. if the provider can justify in writing, to the satisfaction of the Commissioner that licensed beds is an inappropriate measure of capacity.

d. Waiver of limitation. Providers may apply for a waiver of the provisions of D.8.a. and b. in the following instances:

(1) For new facilities or facilities with major changes in capacity, that are applying for a certificate of need after the effective date of these regulations, the Commissioner may grant a waiver of this capacity calculation and allow a rate based on anticipated actual patient days for the period through the end of the first full fiscal year.

(2) In cases of extreme hardship, nursing homes not covered by D.8.d.(1) and having over 65 per cent welfare patient days may be granted an annual waiver by the Commissioner of this capacity calculation and be allowed a rate based on actual patient days. ''Extreme hardship'' will include a financial situation in which projected cash flow indicates the fact that debt and operating obligations cannot be met.

[(3) Skilled care facilities which have a patient population with an annual average length of stay of 180 days or less may be granted an annual waiver by the Commissioner of this capacity calculation and be allowed a rate based on actual patient days. The average length of stay is determined by dividing the actual patient days for the historical fiscal year by the total discharges for the historical fiscal year.]

(3) Skilled care facilities which have a patient population with an average length of stay of 180 days or less may be granted an annual waiver by the Commissioner of this capacity calculation and be allowed a rate based on actual patient days. The average length of stay is determined by dividing the total discharge patient days for all years by the total discharges for the historical fiscal year. This provision of the rule is effective for the cost reporting period ending on the last day of the month during which this provision of the rule is adopted.

E. Implementation procedures.

1. Effective date of DPW Rule 49 revisions.

[a. Unless noted otherwise, all changes are effective for rates set for cost reports received by the Department of Public Welfare after January 1, 1977. Changes in the cost-of-capital allowance for non-proprietary facilities other than non-proprietary lease facilities are effective July 1, 1977.]

a. Unless noted otherwise, all changes are effective for rates paid August 1, 1977 and subsequent.

F. Severable provisions.

1. If any provisions of the rule as adopted by Commissioner of Public Welfare are found to be unreasonable or not supported by the evidence, the remaining provisions shall remain valid.

Department of Public Welfare

Proposed Rules Governing Merit System Classification Specifications and Related Salaries

Notice of Hearing

Notice is hereby given that a public hearing in the above entitled matter will be held in Room A, fourth floor, Centennial Office Building, 658 Cedar Street, St. Paul, Minnesota on Friday, October 21, 1977 commencing at 9:30 A.M., and continuing until all representatives or other interested groups or persons have had an opportunity to be heard.

All interested or affected persons will have an opportunity to participate. Statements may be made orally and written materials may be submitted at the hearing. In addition, written materials may be submitted by mail to Mr. Steve Mihalchick, Office of Hearing Examiner, 1745 University Avenue, St. Paul, Minnesota, 55104, either before the hearing or within 5 working days after the close of the hearing or for a longer period not to exceed 20 days if so ordered by the hearing examiner.

Several counties, either singly or in conjunction with other counties have recently implemented Human Service

KEY: Existing rules are printed in standard type face. Proposed additions to existing rules are printed in **boldface**, while proposed deletions from existing rules are printed within [single brackets]. Additions to proposed rules are **underlined and boldfaced**, while deletions from proposed rules are printed within [[double brackets]].

Boards. The federal Social Security Act of 1939 as amended mandates that federally funded grant-in-aid agencies, such as county Human Service Boards, have an approved merit system for their personnel. To date, all of the Human Service Boards have opted to receive merit system coverage from the Minnesota Merit System. Current Minnesota Rules of the Department of Public Welfare for the Minnesota Merit System do not contain all the various types of classification specifications necessary to employ persons under a human service jurisdiction. In addition, some of the existing classification specifications are not broad enough to encompass the various functions of persons in these classes who are employed in a human service agency.

New classification specifications are proposed for the following classes: Director of Assessment Systems (Minnesota Rule DPW 125 O.); Human Services Director I, II, III (DPW 125 S., T., U.); Assistant Human Services Director (DPW 125 V.); Policy/Program Analyst (DPW 125 W.); Community Health Services Supervisor (DPW 126 E.); Human Services Supervisor I (DPW 126 H.); Developmental Achievement Center Director (DPW 126 N.); Transportation Coordinator (DPW 126 U.); Assistant Residential Facility Operator(s) (DPW 128 R.); Psychologist II and IV (DPW 128 W. and X.); Senior Citizen's Aide (DPW 128 Y.); Chemical Dependency Coordinator (DPW 128 Z.); Developmental Achievement Center Teacher (DPW 128 A.A.); Developmental Achievement Center Instructor (DPW 128 B.B.); Developmental Disabilities Coordinator (DPW 128 C.C.); Mental Health Worker (DPW 128 D.D.); Physical Therapist (DPW 130 A.); Home Maker/Home Health Aide (DPW 130 D.); Director of Business Management I (DPW 131 I.); Information System Specialist (DPW 132 N.); and Bus Driver (DPW 135 G.).

Revisions to existing class specifications are proposed for the following classes: Chemical Dependency Counselor [retitled from Counselor on Alcoholism] (DPW 138 H.); Residential Facility Operator(s) [retitled from Group Home Parents] (DPW 128 I.); Home Health Aide (DPW 130 F.); and Director of Business Management II [retitled from Director of Business Management] (DPW 131 H.).

Amendments to DPW 140, which is the compensation schedule, are proposed to provide a salary rate for each of the new job classes.

There is no estimate of cost of these proposed rule changes as the decision to employ or not employ persons in these classifications is solely at the discretion of the local agency.

The proposed effective date of these new and revised rule changes is the effective date of the promulgation of these rules.

Copies of the proposed new and revised classification specifications and the proposed compensation schedule are available and one free copy may be obtained by writing to the Merit System Supervisor, Minnesota Merit System, fourth floor, Centennial Office Building, St. Paul, Minnesota 55155. Additional copies will be available at the door on the date of the hearing. The agency's authority to promulgate the proposed rules is contained in Minn. Stat. § 393.07 subd. 5. A "Statement of Need" explaining why the agency feels the proposed rules are necessary and a "Statement of Evidence" outlining the testimony, they will be introducing will be filed with the Hearing Examiner's Office at least 25 days prior to the hearing and will be available there for public inspection.

Please be advised that Minn. Stat. ch. 10A, requires each lobbyist to register with the Ethical Practices Board within five days after he commences lobbying. Lobbying includes attempting to influence rulemaking by communicating or urging others to communicate with public officials. A lobbyist is generally any individual who spends more than $250 per year for lobbying or any individual who is engaged for pay or authorized to spend money by another individual or association and spends more than $250 per year or five hours per month at lobbying. The statute provides certain exceptions. Questions should be directed to the Ethical Practices Board, 41 State Office Building, St. Paul, Minnesota 55155, phone (612) 296-5615.

Edward J. Dirkswager
Acting Commissioner

DPW 125 Welfare administrative group.

O. Director of assessment systems.

1. Kind of work. Under the direction of the county welfare (or human services) director, designs, implements, and maintains evaluation systems for assessing program effectiveness and employee performance and performs related work as assigned.

2. Examples of work (illustrative only). Formulates quantitative and qualitative standards and criteria for assessing service delivery. Develops and recommends mechanisms for identifying and recording program effectiveness and employee performance. Advises on the means of conducting qualitative evaluations of effectiveness performance, including those requiring subjective judgment. Advises, or secures advice from external sources, on means and methods to improve effectiveness and performance. Participates in development of strategies conducive to agency acceptance and use of evaluation methods as an indispensable aid to increased managerial effectiveness and for employee self-improvement. Prepares consolidated reports for management and employees, as required for internal and external use, including effectiveness and/or performance reports to local, state and federal agencies or organiza-

tions. Reviews evaluation findings and translates them for administrative consideration. Evaluates management systems and organizational structures, and suggests improvements.

3. Knowledges and abilities required.

a. Knowledge of evaluation systems theory and practice. Knowledge of public administration theory and practice. Knowledge of functions and objectives of federal, state, and local welfare (human services) programs.

b. Ability to establish and maintain effective professional and public relations. Ability to write clear, concise and effective reports. Ability to verbally communicate ideas and interpretations.

4. Minimum qualifications of education and experience.

a. Master's degree from a recognized school in social work, public health, public administration, business administration, psychology or a closely related field and two years of full-time experience in a highly responsible pertinent supervisory or administrative capacity.

OR

b. A bachelor's degree from an accredited four year college with a major in a related field and four years of full-time experience in a highly responsible, pertinent supervisory or administrative capacity.

DPW 125 Welfare administrative group.

S. Human services director I.

1. Kind of work. Coordinates the development, implementation, and evaluation of human services program and activities in a human service agency, under the administrative direction of a Human Services Board and the technical supervision of the State Departments of Public Welfare, Health and Corrections. Provides leadership for the development of the annual comprehensive human services plan and budget and supervises the central office of the Human Services Board. Work is reviewed through monthly progress reports to the Human Services Board and annual review by committee and Human Services Board of objectives achieved and effectiveness of services delivery. Performs related work as required.

2. Examples of work (illustrative only). Prepares and recommends policy regarding the operation of the human services agency, carries out Board decisions and administers Human Services Board programs. Plans, implements or coordinates programs for the most effective and efficient service to clients and the community. Interprets federal, state and county administrative policies and procedures to the staff, Board and community through conferences, staff meetings and consultation. Organizes the material to be presented at meetings of the Board, analyzes budget and financial statements and makes regular and periodic reports on human services activities. Coordinates the preparation of the annual budget including the comprehensive program plan with other department heads and presents to the Board. Meets with professional groups, employers and vendors for discussion of fee schedules, financing and employment and explains human services problems to them and enlists their cooperation. Supervises the preparation of statistical, financial and activity reports for interested county, state and federal authorities. Confers with County Attorney(s) about legal aspects of human services problems. Administers fund raising activities for human services activities, including acquisition of federal and state grant funding. Supervises the central office of Human Services and directs the purchase of all supplies and equipment. Administers the purchase-of-service contracting and monitoring of program affiliates and other contracted services. Directs various committee projects and demonstration projects in selected problem areas. Establishes and maintains working relationships with the community, local, county, state and federal levels of government and with private service agencies.

3. Knowledges and abilities required.

a. Knowledge of state and federal laws and regulations relating to human services. Knowledge of principles and practices of public administration. Knowledge of principles, methods and procedures of human services administration. Knowledge of organizational theory and effective management practices. Knowledge of organization and functions of federal, state and local agencies in the human services fields. Knowledge of social conditions in rural areas and small urban centers. Knowledge of community structure and resources including those aspects of political, economic and social activities capable of lending support to human services programs. Knowledge of public budgeting and accounting.

b. Ability to develop and implement short and

KEY: Existing rules are printed in standard type face. Proposed additions to existing rules are printed in **boldface**, while proposed deletions from existing rules are printed within [single brackets]. Additions to proposed rules are **underlined and boldfaced**, while deletions from proposed rules are printed within [[double brackets]].

long-range administrative objectives. Ability to achieve coordination of separate operating functions. Ability to plan and organize work effectively. Ability to establish and maintain effective working relationships with employees, citizens and community officials. Ability to work with others in a consulting capacity. Ability to speak and write clearly and interestingly.

4. Minimum qualifications of education and experience.

a. A master's degree from a recognized school in human services administration, public administration, business administration, social work, public health, psychology, or a closely related field and one year of experience as a Social Service Supervisor I, Human Services Supervisor I, Administrative Assistant I, Welfare Director I, or equivalent level of experience in a supervisory or administrative position.

OR

b. A bachelor's degree from an accredited four-year college in public administration, business administration, social work, public health, psychology, or a closely related field and two years of experience as a Social Service Supervisor I, Human Services Supervisor I, Administrative Assistant I, Welfare Director I, or equivalent level of experience in a supervisory or administrative position.

OR

c. When taking this examination on a promotional basis, completion of any four-year degree from an accredited college will substitute for the bachelor's degree requirement listed above.

DPW 125 Welfare administrative group.

T. Human services director II.

1. Kind of work. This is professional and administrative work with primary responsibility for directing the human services programs of a county agency. Under the administrative policy direction of a Human Services Board and the technical supervision of the State Department of Public Welfare, a Human Services Director II provides leadership in developing, implementing, coordinating and evaluating human services programs and activities. The employee directs development of the comprehensive human services plan and budget and directs and coordinates all activities of the professional staff. Work is reviewed through monthly progress reports to the Human Services Board and annual review by committee and Human Services Board of objectives achieved and effectiveness of services delivery. Performs related work as required.

2. Examples of work (illustrative only). Prepares and recommends policy regarding the operation of the human services agency, carries out Board decisions and administers Human Services Board programs. Plans, implements and coordinates programs for the most effective and efficient service to clients and the community. Develops organization and operational procedures for providing services to meet established objectives. Interprets federal, state and county administrative policies and procedures to the staff, board and community through conferences, staff meetings and consultation. Acquires personnel, assigns work and directs staff development and performance appraisal according to prescribed personnel policies. Organizes the material to be presented at meetings of the Board, analyzes budget and financial statements and makes regular and periodic reports on human services activities. Directs preparation of the annual budget including the comprehensive program plan and presents to Board. Meets with professional groups, employers and vendors for discussion of fee schedules, financing and employment and explains human services problems to them and enlists their cooperation. Assumes appropriate management role as it pertains to labor-management relations. Supervises the preparation of statistical, financial and activity reports for interested county, state and federal authorities. Confers with County Attorney about legal aspects of human services problems. Administers fund raising activities for human services activities, including acquisition of federal and state grant funding. Directs the purchase of all supplies and equipment. Administers the purchase of services contracting and monitoring of program affiliates and other contracted services. Promotes and participates in various committee projects and demonstration projects in selected problem areas. Establishes and maintains working relationships with the community, local, county, state and federal levels of government and with private service agencies. Participates in public education by speaking before various community and civic groups.

3. Knowledges, skills and abilities required.

a. Knowledge of state and federal laws and regulations relating to human services. Knowledge of principles and practices of public administration. Knowledge of principles, methods and procedures of human services administration. Knowledge of organizational theory and effective management practices. Knowledge of organization and functions of federal, state and local agencies in the human services fields. Knowledge of social conditions in rural areas and small urban centers. Knowledge of community structure and resources including those aspects of political, economic and social activities capable of lending support to human services programs. Knowledge of public budgeting and accounting.

b. Ability to develop and implement short and long-range administrative objectives. Ability to plan and organize work effectively and to achieve coordination of operating programs. Ability to establish and maintain effective working relationships with other county officials, employees, community officials and the public. Ability to work with others in a consulting capacity. Ability to speak and write clearly and interestingly.

4. Minimum qualifications of education and experience.

a. A master's degree from a recognized school in Human Services Administration, Public Administration, Business Administration, Social Work, Sociology, Public Health, Psychology or a closely related field and two years of experience as a Human Services Director I, Welfare Director II, Administrative Assistant II, Social Service Supervisor II or equivalent level of experience in a supervisory or administrative position.

OR

b. A bachelor's degree from an accredited four-year college in Public Administration, Business Administration, Social Work, Sociology, Public Health, Psychology or a closely related field and three years of experience as Welfare Director II, Human Services Director I, Administrative Assistant II, Social Service Supervisor II or equivalent level of experience in a supervisory or administrative position.

OR

c. A bachelor's degree from an accredited four-year college in Public Administration, Business Administration, Social Work, Sociology, Public Health, Psychology or a closely related field and four years of experience as an Administrative Assistant I, Social Service Supervisor I, Welfare Director I, Director of Public Health Nursing I or equivalent level of experience in a supervisory or administrative capacity. One year of graduate training in a recognized school of social work may be substituted for one year of the required supervisory or administrative experience.

OR

d. When taking this examination on a promotional basis, completion of any four-year degree from an accredited college will substitute for the bachelor's degree requirement listed above.

DPW 125 Welfare administrative group.

U. Human services director III.

1. Kind of work. This is professional and administrative work with primary responsibility for directing the programs of a human service agency. Under the administrative direction of a Human Services Board and the technical supervision of the State Departments of Public Welfare, Human Services, Health, and Corrections, a Human Services Director III provides leadership in developing, implementing, integrating and evaluating human services programs and activities. The employee is responsible for the annual comprehensive human services plan and budget and for the management of personnel and physical resources. Work is reviewed through monthly progress reports to the Human Services Board and annual review by committee and Human Services Board of objectives achieved and effectiveness of services delivery. Performs related work as required.

2. Examples of work (illustrative only). Prepares and recommends policy regarding the operation of the human services agency, carries out Board decisions and formulates standards for and administers Human Services Board programs. Plans, develops and implements programs for the most effective and efficient service to clients and the community. Develops organization, systems and methods for providing services to meet established objectives within the authorized resources and according to existing laws and regulations. Interprets federal, state and county administrative policies and procedures to the staff, Board and community through conferences, staff meetings and consultation. Prepares and presents to Board staffing plan for effective delivery of services, acquires personnel, assigns work and directs staff development and performance evaluation according to prescribed personnel policies. Organizes the material to be presented at meetings of the Board, analyzes budget and financial statements and makes regular and periodic reports on human services activities. Directs preparation of the annual budget including comprehensive program and staffing plans and presents to Board. Assumes active leadership in a variety of community enterprises, serves as a community resource and explains human service programs to the community. Meets with professional groups, employers and vendors for discussion of fee schedules, financing and employment and explains human service problems to them and enlists their cooperation. Assumes appropriate management role as it pertains to labor management negotiations. Supervises the preparation of statistical, financial

KEY: Existing rules are printed in standard type face. Proposed additions to existing rules are printed in **boldface**, while proposed deletions from existing rules are printed within [single brackets]. Additions to proposed rules are **underlined and boldfaced**, while deletions from proposed rules are printed within [[double brackets]].

and activity reports for interested county, state and federal authorities. Confers with County Attorney(s) or agency attorney about legal aspects of human services problems. Administers fund raising activities for human services activities, including acquisition of federal and state grant funding. Analyzes and evaluates human services and administrative policies and procedures through conferences, staff meetings and consultation. Directs the purchasing of all supplies and equipment. Administers the purchase-of-service contracting and monitoring of program affiliates and other contracted services. Directs various committee projects and demonstration projects in selected problem areas. Establishes and maintains working relationships directly, or by delegation, with the community, local, county, state and federal levels of government, with other service agencies and consumers.

3. Knowledges and abilities required.

a. Knowledge of state and federal laws and regulations relating to human services. Knowledge of principles and practices of public administration. Knowledge of organizational theory and effective management practices. Knowledge of organization and functions of federal, state and local agencies in the human services fields. Knowledge of community structure and resources including those aspects of political, economic and social activities capable of lending support to human services programs. Knowledge of public budgeting, accounting and programming.

b. Ability to develop and implement short and long-range administrative objectives. Ability to plan and organize work effectively by function. Ability to establish and maintain effective working relationships with other country officials, employees, professional societies, civic and community groups and the general public. Ability to work with others in a consulting capacity. Ability to write and speak effectively on human services subjects and all aspects of the programs.

4. Minimum qualifications of education and experience.

a. A master's degree from a recognized school in human services administration, public administration, business administration, social work, sociology, public health, psychology, or a closely related field and three years of experience as an Assistant Human Services Director, Welfare Director III, Administrative Assistant III, Social Services Supervisor III or equivalent level of experience in a supervisory or administrative position.

OR

b. A bachelor's degree from an accredited four-year college in public administration, business administration, social work, sociology, public health, psychology or a closely related field and four years of experience as an Assistant Human Services Director, Welfare Director III, Human Services Director II, Administrative Assistant III, Social Services Supervisor III or equivalent level of experience in a supervisory or administrative position.

OR

c. A bachelor's degree from an accredited four-year college in public administration, business administration, social work, sociology, public health, psychology or a closely related field and six years of full-time experience as an Administrative Assistant II, Social Service Supervisor II, Human Services Director I, Welfare Director II, Director of Public Health Nursing II, or equivalent level of experience in a supervisory or administrative position. One year of graduate training in a recognized school of social work may be substituted for one year of the required supervisory or administrative experience.

OR

d. When taking this examination on a promotional basis, completion of any four-year degree from an accredited college will substitute for the bachelor's degree requirement listed above.

DPW 125 Welfare administrative group.

V. Assistant human service director.

1. Kind of work. Under the general supervision of the Human Service Director, assumes responsibility for the accomplisment of established program objectives of the service and/or financial delivery systems in a large human service agency; assists the Director in planning, supervising, directing and coordinating the activities of the agency; assumes final responsibility for functions delegated by the Director; confers with and advises the Director on recommended policy for the Human Service Board's approval and performs related work as assigned.

2. Examples of work (illustrative only). Integrates, coordinates and supervises activities and personnel assigned to the various programs. Directs supervisors to assure that they understand and follow the objectives, methods and standards established within the resources available to accomplish program objectives. Conducts planning sessions with supervisors to secure their recommendations as to objectives, methods and resource requirements for the annual plan. Participates in the development of the annual plan and recommends objectives, standards, budgets and staffing requirements for programs to the Director for Human Service Board ap-

proval. Recommends changes to the Director in policies, programs, plans and budgets as needed. Establishes administrative practices and procedures; develops manuals needed to facilitate the accomplishment of the program objectives and as necessary, consults with other agency staff. Reviews and evaluates accomplishment of program objectives using both quality and quantity measures and utilizes expertise of specialized resources to assist in the evaluation and implementation of programs as needed, and reports to the Director. Establishes corrective actions to resolve delinquencies in meeting the standards and/or exceed the standards. Conducts performance appraisal of supervisors and recommends salary increases. Reviews recommended salary increases made by supervisors for their subordinate staff. Establishes and conducts process for communication and understanding of organizational plans and programs by employees, consumers and/or external agencies. Hears and discusses suggestions or complaints from employees which the supervisors have been unable to resolve and recommends action to the Director as to resolution of complaints. Attends and participates in county, regional and state meetings, conferences, and workshops to keep informed on current developments in human service and work methods. Takes minor staff disciplinary action and recommends major disciplinary actions to Director. Recruits personnel and recommends their employment. Prepares and submits reports to the Director, other agency staff and federal and state agency staff as needed. Conducts staff meetings.

3. Knowledges and abilities required.

a. Knowledge of the functions, procedures, organization and governing laws and regulations of the agency. Knowledge of the principles and practices of public administration. Knowledge of federal and state welfare, health and corrections laws and a broad understanding of the objectives and functions of a human service program. Knowledge of the functions and resources of other private, local, state and federal agencies.

b. Ability to do original work in the formulation of policies and procedures. Ability to analyze problems and make prompt and sound decisions. Ability to motivate and direct others. Ability to establish and maintain effective professional and public relations. Ability to direct the work of professional staff. Ability to plan work according to predicted needs of the agency.

4. Minimum qualifications of education and experience.

a. A master's degree from a recognized school in public administration, business administration, social work, public health, psychology or a closely related field and two years of full-time experience as an Administrative Assistant II, Social Service Supervisor II, Welfare Director II, Director of Public Health Nursing II or equivalent level of experience in a supervisory or administrative position.

OR

b. A bachelor's degree from an accredited four-year college in public administration, business administration, social work, sociology, public health, psychology, or a closely related field and three years of full-time experience as an Administrative Assistant II, Social Service Supervisor II, Welfare Director II, Director of Public Health Nursing II or equivalent level of experience in a supervisory or administrative position.

OR

c. A bachelor's degree from an accredited four-year college in public administration, business administration, social work, sociology, public health, psychology, or a closely related field and five years of full-time experience as an Administrative Assistant I, Social Service Supervisor I, Welfare Director I, Director of Public Health Nursing I or equivalent level of experience in a supervisory or administrative position. One year of graduate training in a recognized school of social work may be substituted for one year of the required supervisory or administrative experience.

OR

d. When taking this examination on a promotional basis, completion of any four-year degree from an accredited college will substitute for the bachelor's degree requirement listed above.

DPW 125 Welfare administrative group.

W. Policy/Program analyst.

1. Kind of work. Under the general direction of a county welfare director or human services director designs, implements, and maintains evaluation systems for assessing program effectiveness and employee performance; assists with program planning and gathers citizen input for Board review, and performs related work as assigned.

KEY: Existing rules are printed in standard type face. Proposed additions to existing rules are printed in **boldface**, while proposed deletions from existing rules are printed within [single brackets]. Additions to proposed rules are **underlined and boldfaced**, while deletions from proposed rules are printed within [[double brackets]].

2. Examples of work (illustrative only). Formulates quantitative and qualitative standards and criteria for assessing service delivery. Develops sources of citizen input for the Board's review. Develops and recommends mechanisms for identifying and recording program effectiveness and employee performance. Advises on the means of conducting qualitative evaluations of effectiveness performance, including those requiring subjective judgment. Assists program supervisors with the design of effective planning models. Participates in development of strategies conducive to agency acceptance and use of evaluation methods as an aid to increased managerial effectiveness and for employee self-improvement. Designs and maintains a variety of approaches to community needs assessment. Develops and implements a data bank of information for use by the staff and the community. Reviews evaluation findings and translates them for administrative consideration. Evaluates management systems and organizational structures, and suggests improvements.

3. Knowledges and abilities required:

a. Knowledge of evaluation systems theory and practice. Knowledge of the principles and practices of public planning. Knowledge of public administration theory and practice. Knowledge of functions and objectives of federal, state, and local welfare and human services programs.

b. Ability to establish and maintain effective professional and public relations. Ability to perceive and interact with community requests. Ability to write clear, concise and effective reports. Ability to verbally communicate ideas and interpretations.

4. Minimum qualifications.

a. Master's degree from a recognized school in social work, public health, public administration, business administration, psychology or a closely related field and two years of full-time experience in a highly responsible pertinent supervisory or administrative capacity.

OR

b. A bachelor's degree from an accredited four-year college with a major in a related field and four years of full-time experience in a highly responsible, pertinent supervisory or administrative capacity.

DPW 126 Welfare supervisory group.

E. Community health services supervisory (Human Services).

1. Kind of work. An employee in this class is responsible for supervision and coordination of all public health services which guard and improve the general health of residents in an assigned area or district. The work includes coordination of education activities of public health programs with other health education activities in the community. A Community Health Services Supervisor evaluates public health program needs of the community, assures that standards are being maintained and supervises professional staff in providing needed services. Work is performed under the general direction of an Assistant Human Services Director or Human Services Director and professional consultation of the State Department of Health, but with considerable latitude for the exercise of independent judgment. Work is reviewed through conferences, written reports and objectives achieved. Performs related work as required.

2. Examples of work (illustrative only). Promotes, maintains and coordinates the public health, nursing and environmental health programs. Conducts continuous assessment of community health needs. Evaluates county and/or multi-county health programs and assists in implementing needed program revisions or new programs. Confers with and advises program coordinators in the development of new programs and the solution of problems encountered. Prepares and proposes the annual budget including the annual community health services plan. Recruits, interviews and recommends additions to staff and assignment of personnel. Identifies staff training needs and plans and supervises a program or orientation, in-service training and staff development. Supervises and participates in the preparation, selection, evaluation and distribution of health education materials to local communities. Participates in continuing education programs for health educations. Establishes and maintains working relationships with local health providers, health educators and related volunteer organizations. Attends various civic and community group meetings to explain and promote community health services. Attends state, regional and local professional conferences and seminars to keep informed on current developments in the field. Maintains related records and provides reports as needed.

3. Knowledges, skills and abilities required.

a. Knowledge of the principles and practices of public health nursing and environmental sanitation. Knowledge of the principles, practices and objectives of public health nursing administration. Knowledge of public health laws and ordinances. Knowledge of methods of effective delivery of community health services. Knowledge of measures and techniques used in the prevention of communicable diseases. Knowledge of the principles and techniques of community health education. Knowledge of the sociological aspects of commu-

nity life. Knowledge of the functions of related health and social agencies.

b. Ability to interpret and explain public health laws and regulations. Ability to establish and maintain effective relationships with members of other disciplines, the public, and with the professional and lay staff. Ability to make independent decisions. Ability to communicate effectively both orally and in writing.

4. Minimum qualifications of education and experience.

a. A master's degree in public health nursing, health or a closely related field; eligible for certification as a public health nurse in Minnesota; three years of experience in public health nursing, teaching, public health, or community health, including one year supervisory, consultative, teaching and/or field placement supervision and/or administrative experience in an agency or college offering generalized public health nursing programs.

OR

b. A baccalaureate degree from a school of nursing accredited by the National League for Nursing, certification as a public health nurse in Minnesota, six years of full-time public-health nursing experience, including two years of successful, supervisory, consultative and/or administrative experience in an agency offering generalized public-health nursing service, certification as a public-health nurse in Minnesota.

DPW 126 Welfare supervisory group.

H. Human services supervisor I.

1. Kind of work. Under general administrative supervision, is responsible for the program administration and direct supervision of one or more human service activities; plans and directs administrative procedures; coordinates agency activities with other human service units; compiles reports and surveys, performs appropriate liaison work with other agencies and the community; and performs related work as assigned.

2. Examples of work (illustrative only). Assigns work to staff. Recruits, interviews and recommends additions to staff and assignment of personnel. Prepares administrative reports depicting the activity of one or more human service programs. Develops new procedures for recording and tabulating agency activity. Coordinates special projects and implements administrative procedures as required. Represents the agency at public meetings and conferences. Plans, organizes and conducts orientation programs for new employees. Evaluates staff's performance and recommends appropriate action. Reports to the Board on matters concerning one or more program areas. Prepares budgets for one or more human service activities. Develops fiscal goals, objectives and controls as required. Justifies deviations from the budget when they occur. Coordinates fiscal activities with other units and departments. Monitors and reviews purchase-of-service and contracts and drafts new contracts using established guidelines. Conducts staff meetings and agency information meetings. Completes forms and correspondence as required. Identifies staff training needs and plans and organizes a program of in-service training and staff development.

3. Knowledge and abilities required.

a. Knowledge of the functions, procedures, organization and governing rules of the human service activities involved. Knowledge of the use of budgeting, fiscal controls and generally accepted accounting principles. Knowledge of the principles, techniques and practices of supervision. Knowledge of acceptable office procedures, practices and equipment. Knowledge of the principles and practices of public administration. Knowledge of the functions and resources of other private, local, state and federal agencies.

b. Ability to design and administer a budget. Ability to supervise and direct the work of others. Ability to write and present reports. Ability to coordinate a variety of administrative services. Ability to recruit and select qualified personnel. Ability to formulate methods and procedures. Ability to establish and maintain effective professional and public relationships. Ability to explain and uphold regulatory provisions. Ability to understand and effectively carry out complex oral and written instructions.

4. Minimum qualifications of education and experience.

a. Graduation from an accredited four-year college with a major in a pertinent field; and four years of related experience.

OR

b. When taking a promotional examination for

KEY: Existing rules are printed in standard type face. Proposed additions to existing rules are printed in **boldface**, while proposed deletions from existing rules are printed within [single brackets]. Additions to proposed rules are **underlined and boldfaced**, while deletions from proposed rules are printed within [[double brackets]].

this position, a permanent employee may substitute two years of related experience for one year of college for up to two years of the required college education.

DPW 126 Welfare supervisory group.

N. Developmental achievement center director.

1. Kind of work. Under general supervision, plans, supervises and administers a learning program for the mentally retarded; and performs related work as required.

2. Examples of work (illustrative only). Plans, directs, and supervises a curriculum for the care, training, and education of the mentally retarded. Supervises the records, evaluations, progress reports, and program plans for program participants. Plans, supervises, and administers a program of parental counseling. Consults with other professionals on needs of participants. Assists in selecting adequate personnel for the center. Trains new staff. Evaluates staff performance and recommends appropriate action. Identifies and documents developmental achievement center program funding needs and assists in preparation of the budget for the center. May make presentations to the Board on the needs of the center and the participants. Answers correspondence relating to center and participants. Maintains contact with the public and other resource agencies as required.

3. Knowledges and abilities required.

a. Knowledge of developmental achievement center program, operations, policies and procedures. Knowledge of mental retardation and learning problems. Knowledge of resources available to serve the mentally retarded. Knowledge of state laws relating to mentally retarded and developmental achievement centers. Knowledge of budgeting.

b. Ability to plan, direct and administer curriculum, and implement schedule of activities. Ability to communicate effectively orally and in writing. Ability to supervise and give direction to staff. Ability to plan and conduct meetings, evaluations, and in-service training. Ability to plan, direct and participate in counseling sessions. Ability to keep and maintain records as required.

4. Minimum qualifications of education and experience. A bachelor's degree from an accredited four-year college with a major in early childhood education, special education, social work, psychology, nursing, or a closely related area.

DPW 126 Welfare supervisory group.

U. Transportation coordinator.

1. Kind of work. Under general supervision, plans, supervises and administers a transportation and communication program which may consist of paid employees and/or volunteer workers; recruits, selects, orients, and trains volunteers; assigns activities to employees and volunteers; and performs related work as required.

2. Examples of work (illustrative only). Works with civic, church, and other community groups to develop and maintain interest and participation in transportation and communication programs. Interviews persons interested in performing volunteer services. Conducts periodic individual conferences and group meetings with employees and volunteer workers to discuss programs and problems. Consults with agency staff about the need for transportation and/or communication check for clients. Assigns volunteer workers to regular and/or special assignments. Evaulates employee and volunteer worker performance. Establishes standards for volunteer services within the transportation and communication areas. Maintains time records for employees and volunteers. Oversees maintenance of agency vehicles on regular basis. Balances cash receipts for transportation of clients, and completes proper reports. Attends meetings as required. Makes regular or special reports as required. May serve as an auxiliary driver.

3. Knowledges and abilities required.

a. Knowledge of human behavior. Knowledge of community activities and resources. Some knowledge of volunteer services programs.

b. Ability to maintain good working relationships with community groups, agency staff, and volunteer workers. Ability to exercise good judgment in determining assignments of volunteers. Ability to train and supervise employees and/or volunteers. Ability to express ideas clearly, both orally and in writing. Ability to handle financial records. Ability to determine need for regular or special servicing of agency vehicles.

4. Minimum qualifications of education and experience. Graduation from high school or its equivalent and three years of successful experience in public service work; this may include work as an automobile driver, bus driver or related activity.

Note: If employee in this class will drive a van, mini-bus, and/or bus, a valid Minnesota Class B driver's license will be required.

DPW 128 Auxiliary-Services group.

H. [Counselor on alcoholism] Chemical dependency counselor.

1. Kind of work. Under general supervision, assists in a program designed for the recovery of [alcoholics] **chemically dependent clients, advises and counsels spouses, families and interested groups concerning treatment of the chemically dependent;** and performs related work as assigned.

2. Examples of work (illustrative only). Confers with the professional staff about the general approach to individual treatment plans. Establishes an understanding and cooperative relationship with clients. Meets with clients individually and in groups to work out ways to combat reversion tendencies. [Arranges for membership of] **Provides information to** clients [in] **concerning** local Alcoholics Anonymous chapters, **treatment centers, and half way houses, and makes referrals as client needs dictate.** Provides counseling to [alcoholics and problem drinkers] **the chemically dependent and chemical abusers,** as well as to their families. Provides follow-up and emergency services. Maintains records on clients and prepares reports on the program. Establishes and maintains liaison and good relations with other local agencies and groups in the community. Participates in educational presentation to community groups and makes public speaking presentations for interpretation and understanding of the [alcoholism program] **chemically dependent, chemical abusers and their families. Refers clients to appropriate financial, legal and marital counseling as required.**

3. Knowledges and abilities required. [Thorough] Knowledge of the habits, **traits,** and actions of [alcoholics] **those who are chemically dependent.** [Thorough] Knowledge of the techniques employed in [Alcoholics Anonymous] **treatment**-type programs of recovery techniques. Knowledge of a comprehensive program for recovery of [alcoholics] **the chemically dependent and those that are chemical abusers.** Knowledge of interviewing and recording techniques. Ability to establish rapport with [alcoholics] **clients** under treatment. Ability to understand and carry out directions. [from the professional staff.] Ability to organize and carry out a program to fit individual or group needs. Ability to observe behavior and reactions of clients and to make reports. Ability to establish and maintain effective working relationships with staff members, public and private agencies, employers, community leaders, and the general public.

4. Minimum qualifications of education and experience. [Graduation from a standard high school or its equivalent], Three consecutive years of sobriety, **if chemically dependent,** and successful completion of **an** [Counselor on Alcoholism] **approved chemical dependency** training program accredited by the Department of Public Welfare.

DPW 128 Auxiliary-Service group.

I. [Group home parents] Residential facility operator(s).

1. Kind of work. The **person or** couple in this class is responsible for the daily care and management of a group of [children] **participants** living in a county-operated [foster home] **facility.** [Responsibility extends to particiption in] **They provide** guidance, [and] **supervision and** counseling [of] **to** the [children] **residents,** [in addition to] **do** the housekeeping, budgeting, meal planning, and custodial [functions] **work** involved in the actual operation of the home; **and perform other related duties as assigned.** Supervision is [received] **provided** in matters of planning and over-all programming [from] **by** the social [welfare] **service** supervisor, **human service supervisor** [or] **and/or** a [case] **social** worker, **mental health worker or corrections worker**.

2. Examples of work (illustrative only). Helps [child] **residents** adjust in home, school, and community **environments** and guides and counsels [him] **them** in solving problems that arise. Administers rules [about] **concerning** discipline and personal habits and provides protective limits and firm control over destructive behavior. Helps [children] **residents** learn [good] **socially acceptable** values and at the same time [leaves them] **permits them** [freedom] to become independent persons able to make their own choices and decisions. Supervises and controls leisure-hour activities. Observes and reports orally and/or in writing to the [case] worker **concerning** [about] behavior and counsels [with him about] **with the worker regarding** correct procedures to follow in problem areas. Attends agency meetings and takes part in discussions of plans for and progress of individual [children] **residents** in the [group home] **facility** and in such decisions as those involving intake, grouping, and discharge. Helps [children to feel they are a part of] **residents adjust to** a group living **experience** [and belonging together] and fosters tolerance and acceptance of one another. [Handles visits, calls, etc. of disturbed parents of children.] **Handles problems which may arise from visits and calls by parents or relatives of residents. Plans and coordinates leisure time activities. Counsels residents concerning part-time employment opportunities.** Participates in helping [children separate from foster parents] **residents in the separation process** when they are returning to their own family, becoming a member of a large institution, or setting up independent

KEY: Existing rules are printed in standard type face. Proposed additions to existing rules are printed in **boldface**, while proposed deletions from existing rules are printed within [single brackets]. Additions to proposed rules are **underlined and boldfaced**, while deletions from proposed rules are printed within [[double brackets]].

living arrangements. Cooperates with school officials in dealing with school problems. Observes health of [children] **residents** and reports need for medical attention to [case] worker. [Takes child to] **Provides transportation to school and recreational activities**, medical center or dentist, **or other appropriate destinations**. Assigns [children] **residents** household chores and encourages neatness and orderliness. Orders groceries and prepares well-balanced meals within the amount budgeted. Makes appropriate use of supplies and equipment. Maintains grounds and makes general repairs in house. Keeps adequate records. Participates in training programs as assigned by agency. [Performs related duties as required.]

3. Knowledge and abilities required.

a. [Extensive] Knowledge of [children and their problems, behavior, and development] **behavior problems and individual development**. [Considerable] Knowledge of household management including cleaning, food service, and household supplies. Knowledge of simple group dynamics. Knowledge of health and safety precautions in group environment. Knowledge of family budgeting methods. **Knowledge of simple household repair methods.**

b. Ability to share [parental] **family** role and to help [child] **resident** understand the responsibility of the [case] **social** worker, the foster parents, and [his own] **natural** parents. Ability to recognize and support the strengths in each [child] **resident. Ability to teach** [children] **residents** appropriate ways to behave and standards of good conduct and to provide consistent external controls without hostility. Ability to cooperate with and utilize supervision from professional staff who are working with the [children] **residents** assigned to the [home] **facility**. [Ability to participate in P.T.A. and other local organizations.] Ability to effectively interpret [group foster home] **facility** program to the community. Ability to maintain appropriate housekeeping standards. Ability to keep records and prepare reports. **Ability to perform household tasks quickly and efficiently**.

4. [Desirable] **Minimum** qualifications [of education and experience]. [Graduation from high school. At least one member of the couple must have a high school diploma.] **Demonstrated** maturity and [considerable experience in supervising children either gained from raising own children or from working with children in activities and organizations, plus] experience in houshold management.

Note: This classification may be used either for one person or for a couple, whichever is designated by the appointing authority.

DPW 128 Auxiliary-Service group.

R. Assistant residential facility operator(s).

1. Kind of work. Performs relief duty in the absence of the Residential Facilities Operators in a county facility and during such times provides guidance and counseling to the residents living in the facility. Attends to the housekeeping, meal planning and custodial functions involved in the operation of the facility and/or assists the Residential Facilities Operators while they are on duty and performs assigned functions similar to those performed while on relief duty. Supervision is received in matters of planning and overall programming from the social service supervisor, human service supervisor and/or a social worker, mental health worker or correctional worker. Matters concerning daily resident care, housekeeping, meal planning and custodial functions are assigned by the Residential Facilities Operators.

2. Examples of work (illustrative only). Counsels and guides residents in problems which arise in home, school and community. Administers rules concerning discipline and personal habits and provides protective limits and firm control over destructive behavior. Supervises and controls leisure-hour activities. Observes and reports orally and/or in writing to the Group Home Parents and/or worker concerning behavior and problem areas. Attends agency meetings as required. Helps residents to feel they are a part of a group living and belonging together and fosters tolerance and acceptance of one another. Handles problems which may arise from visits and calls by parents or relatives of residents. May cooperate with school officials in dealing with school problems. Observes health of residents and reports need for medical attention to worker. Provides transportation to school and recreational activities, to medical center, dentist, or other assigned destinations. Assigns residents household chores and encourages neatness and orderliness. Prepares well-balanced meals and may, within the amount budgeted, order groceries. Makes appropriate use of supplies and equipment. Maintains grounds and makes general repairs in house. Keeps adequate records. Participates in training programs as assigned by agency.

3. Knowledges and abilities required.

a. Knowledge of behavior problems and individual development. Knowledge of household management including cleaning, food service, and household supplies. Knowledge of simple group dynamics. Knowledge of health and safety precautions in group environment. Knowledge of family budgeting methods. Knowledge of simple household repair methods.

b. Ability to recognize and support the strengths

in each resident. Ability to teach residents appropriate ways to behave and standards of good conduct and to provide consistent external controls without hostility. Ability to cooperate with and utilize supervision from professional staff who are working with the residents assigned to the home. Ability to effectively interpret facility program to the community. Ability to maintain appropriate housekeeping standards. Ability to keep records and prepare reports. Ability to perform household tasks quickly and efficiently.

4. Minimum qualifications. Demonstrated maturity and experience in household management. Note: This classification may be used either for one person or for a couple, whichever is designated by the appointing authority.

DPW 128 Auxiliary-Services group.

W. Psychologist III.

1. Kind of work. Under general administrative supervision, provides direct psychological counseling services to clients; serves as a consultant to professional and administrative staff in the agency and/or to other county agencies in areas of psychology and psychological techniques; performs crisis intervention work in a psychological setting; handles psychological testing and evaluation of clients; provides community education related to psychological services; and performs related work as required. The employee uses great latitude for independent judgment in carrying out assigned duties and responsibilities.

2. Examples of work (illustrative only). Plans, develops and recommends procedures for a program of prevention and rehabilitation in accordance with agency policies and program objectives. Advises staff of resources available to maximize a client's progress, and assists them in determining the best alternatives based on availability of services. Selects and evaluates techniques to facilitate counseling and work with clients concerning treatment plan. Explains the objectives and findings of psychological services to professional and administrative staff. Develops and conducts in-service training for agency staff. Administers and interprets psychological tests. Conducts psychotherapeutic counseling services to individuals, groups and families. Prepares reports as necessary or required. Assesses and responds appropriately to crisis situations.

3. Knowledges and abilities required.

a. Knowledge of psychological procedures and techniques in rehabilitation and guidance. Knowledge of current developments and trends in the field of psychology. Knowledge of mental hygiene and the factors involved in diagnosis and treatment. Knowledge of the methods and procedures used in the administration of psychological examinations. Knowledge of community resources and agency organization and services. Knowledge of agency goals. Knowledge of the principles and methods of social case work.

b. Ability to manage a caseload. Ability to establish and maintain good professional relationships with the agency staff and community. Ability to plan and conduct appropriate research. Ability to explain psychological services and findings to clients and families, agency staff and community. Ability to use appropriate psychological techniques. Ability to prepare clear, concise reports.

4. Minimum qualifications of education and experience. A doctoral degree in psychology from a recognized school.

DPW 128 Auxiliary-Services group.

X. Psychologist IV.

1. Kind of work. Under general administrative supervision provides direct psychological counseling services to clients; serves as a consultant to professional and administrative staff in the agency and/or to other county agencies in areas of psychology and psychological techniques; performs crisis intervention work in a psychological setting; handles psychological testing and evaluation of clients; provides community education related to psychological services; and performs related work as required. The employee uses great latitude for independent judgment in carrying out assigned duties and responsibilities.

2. Examples of work (illustrative only). Plans, develops and recommends procedures for a program of prevention and rehabilitation in accordance with agency policies and program objectives. Advises staff of resources available to maximize a client's progress, and assists them in determining the best alternatives based on availability of services. Selects and evaluates techniques to facilitate counseling and work with clients concerning treatment plan. Explains the objectives and findings of psychological services to professional and administrative staff. Develops and conducts in-service

KEY: Existing rules are printed in standard type face. Proposed additions to existing rules are printed in **boldface**, while proposed deletions from existing rules are printed within [single brackets]. Additions to proposed rules are **underlined and boldfaced**, while deletions from proposed rules are printed within [[double brackets]].

training for agency staff. Administers and interprets psychological tests. Conducts psychotherapeutic counseling services to individuals, groups and families. Prepares reports as necessary or required. Assesses and responds appropriately to crisis situations.

3. Knowledges and abilities required.

a. Thorough knowledge of psychological procedures and techniques in rehabilitation and guidance. Thorough knowledge of current developments and trends in the field of psychology. Thorough knowledge of mental hygiene and the factors involved in diagnosis and treatment. Thorough knowledge of the methods and procedures used in the administration of psychological examinations. Knowledge of community resources and agency organization and services. Knowledge of agency goals. Some knowledge of the principles and methods of social case work.

b. Ability to manage a caseload. Ability to establish and maintain good professional relationships with the agency staff and community. Ability to plan and conduct appropriate research. Ability to explain psychological services and findings to clients and families, agency staff and community. Ability to use appropriate psychological techniques. Ability to prepare clear, concise reports.

4. Minimum qualifications of education and experience. A doctoral degree in psychology, and licensure by the Minnesota Board of Examiners of Psychologists as a Licensed Consulting Psychologist. (Note: This certification requires two years of supervised experience.)

DPW 128 Auxiliary-Services group.

Y. Senior citizen's aide.

1. Kind of work. Under general supervision, organizes recreational and educational activities for senior citizens and may participate in such duties as assisting in planning special activities, providing special services, attendance at senior citizen's center executive meetings and maintenance of center supplies and records.

2. Examples of work (illustrative only). Organizes recreational and educational activities at the center. Works directly with senior citizens or groups as may be required. Informs senior citizens of pertinent human service programs. May provide special services to senior citizens such as assistance in completion of income tax return forms. Advises senior citizens of special programs and county-wide recreational activities. Participates in center Board meetings to plan and evaluate activities. Attends informational meetings as required. Maintains supplies and records of a senior citizen's center. Arranges transportation for senior citizens. Assists in carrying out a program of tele-care to senior citizens.

3. Knowledges and abilities required.

a. Knowledge of human behavior. Knowledge of services and programs offered by the agency.

b. Ability to organize work efficiently. Ability to establish and maintain good working relationships with individuals, groups, and co-workers. Ability to communicate orally. Ability to follow instructions. Ability to learn agency procedures and community resources.

4. Minimum qualifications. Two years of experience working with the public in a paid or voluntary capacity.

DPW 128 Auxiliary-Service group.

Z. Chemical dependency coordinator.

1. Kind of work. Under general supervision develops, maintains, coordinates and evaluates the full continuum of care programs for the chemically department; trains and provides coordination for chemically dependency counselors and staff; works in areas of alcohol/drug rehabilitation programs with groups or individuals in assisting them to recover from alcohol or drug-related problems. Specialized direction is available from social work, medical and psychological staff personnel. Considerable latitude is permitted in working out relations with clients and methods to be employed in anticipating and avoiding the use of chemical dependent substances. Works unusual hours as required by client and/or community. Performs related work as required.

2. Examples of work (illustrative only). Meets individually and collectively with clients to encourage them to discuss their chemical dependency problems and ways to avoid them as a mode of behavior. Associates closely with clients and establishes an understanding and cooperative relationship with them. Intervenes in client crisis situations. Determines present resources available and needs to be met for a chemical dependency program. Works with area, regional and state committees and offices regarding chemical dependency. Meets with professional staff to discuss recovery potential and treatment plans. Provides coordination, consultation and in-service training to agencies such as law enforcement agencies, the courts, schools and hospitals, and other community care-providing agencies. Trains and coordinates the work of area mental health chemical dependency counselors and staff. Develops and coordinates informal communication and meetings with community chemical dependency programs, including those not funded through the area board. Participates with

school authorities in the development of educational programs in chemical use and abuse. Coordinates development and maintenance of follow-up services related to mental health. Evaluates chemical dependency programs. Encourages and assists industries and employers in developing policies and programs designed to assist chemically dependent employees and their families.

3. Knowledges and abilities required.

a. Knowledge of the methods, procedures and practices relating to treatment programs for the chemically dependent. Knowledge of the habits, traits, and actions of chemically dependent persons. Knowledge of resources available to chemically dependent persons. Knowledge of available comprehensive programs for recovery of the chemically dependent and those that are chemical abusers.

b. Ability to express ideas clearly, both orally and in writing. Ability to establish a good personal relationship with persons under treatment. Ability to understand and carry out directions of professional staff. Ability to plan, develop, budget, and evaluate chemical dependency programs. Ability to work and communicate effectively with personnel in other political, economic and social agencies and various community groups.

4. Minimum qualifications of education and experience.

a. Master's degree from a recognized school in social work the behavioral sciences, three years sobriety if chemically dependent, and equivalent of completion of the chemical dependency training program accredited by the Department of Public Welfare.

OR

b. Graduation from an accredited four-year college in social work or the behavioral sciences, three consecutive years of sobriety if chemically dependent, successful completion of a chemical dependency training program accredited by the Department of Public Welfare, and two years of experience in chemical dependency field.

OR

Relevant experience may be substituted for the college education requirement on a year-for-year basis.

DPW 128 Auxiliary services group.

AA. Developmental achievement center teacher.

1. Kind of work. Under general supervision, plans curriculum for the care, training, and education of the mentally retarded; teaches self-care and/or other special skills to developmental achievement center participants, consults with other professionals in the field, participates in periodic evaluations of participants, and performs related work as assigned.

2. Examples of work (illustrative only). Plans a curriculum for the care, training, and education of the mentally retarded, in conjunction with the developmental achievement center director. Teaches self-care and/or other special skills. Assists director in administering a program of parental counseling. Participates in conferences with parents. Consults with other professionals on needs of participants. Attends in-service meetings, parent meetings, staff meetings, and workshops. Maintains records on center participants. May supervise developmental achievement center instructors.

3. Knowledges and abilities required.

a. Knowledge of developmental achievement center program, operations, policies, and procedures. Knowledge of mental retardation and learning problems. Knowledge of resources available to serve the mentally retarded.

b. Ability to plan and administer curriculum, and implement schedule of activities. Ability to relate to mentally retarded and their needs in learning process. Ability to maintain good working relationships with co-workers and supervisory staff. Ability to provide training in self-care and other areas of specialized learning. Ability to communicate orally and in writing.

4. Minimum qualifications of education and experience. Bachelor's degree from an accredited four-year college with a major in early childhood education, special education, social work, psychology, nursing, or a closely related field plus possession of a valid Minnesota teaching certificate.

DPW 128 Auxiliary-Services group.

BB. Developmental achievement center instructor.

1. Kind of work. Under general supervision,

KEY: Existing rules are printed in standard type face. Proposed additions to existing rules are printed in **boldface**, while proposed deletions from existing rules are printed within [single brackets]. Additions to proposed rules are **underlined and boldfaced**, while deletions from proposed rules are printed within [[double brackets]].

teaches self-care and/or other special skills to developmental achievement center participants, maintains records on participants on regular basis, consults with other disciplines and resources, participates in periodic evaluations of participants, and performs related work as assigned.

2. Examples of work (illustrative only). Assists in planning curriculum for pre-school and adult center participants. Plans and prepares daily schedule of activities and individual programs. Prepares and implements discipline guidelines. Teaches self-care and/or other special skills. Maintains records on center participants on a regular basis. Maintains informal and formal contact with parents. Participates in conferences with parents. Attends all meetings as required (in-service meetings, parent meetings, staff meetings, workshops). Escorts participants to and from classrooms and/or transportation as required.

3. Knowledges and abilities required.

a. Knowledge of day activity center program, operations, policies and procedures. Knowledge of mental retardation and learning problems. Knowledge of resources available to serve the mentally retarded.

b. Ability to plan curriculum and implement schedule of activities. Ability to provide required discipline. Ability to relate to the mentally retarded and their needs in learning process. Ability to maintain good working relationships with co-workers and supervisory staff. Ability to provide training in self-care and other areas of specialized learning. Ability to communicate orally and in writing. Ability to chart, maintain records, and prepare reports as required.

4. Minimum qualifications of education and experience.

a. High school diploma, or the equivalent, and four years experience in supervising children, either gained from raising own children or from working with children in activities and organizations.

OR

b. High school diploma, or the equivalent and two years of experience working with the mentally retarded.

Note: Where, under the supervision of physicians and registered nurses, administering medication to all participants and keeping records of schedule and type of medication is involved, LPN certification is required, and selective certification will be made on the basis of possession of this certificate.

DPW 128 Auxiliary-Services group.

CC. Developmental disabilities coordinator.

1. Kind of work. An employee in this class is responsible for planning, coordinating and service delivery of the mental retardation/development disabilities program in an assigned area or district. The work includes assessing the needs of mentally retarded/developmentally disabled population, involving those interested in or associated with the mental retardation/developmental disabilities fields in problem solving and coordinating these efforts with related agencies and organizations. Work is performed under the supervision of a Human Services Supervisor and administrative direction of the Human Services Director, but considerable latitude is allowed for the exercise of independent judgment. Work is reviewed through conferences, written reports and results obtained. Performs related work as required.

2. Examples of work (illustrative only). Coordinates, plans and implements the county mental retardation programs and community based service delivery systems to pre-school, school age, adult and elderly mentally retarded individuals. Develops community awareness and support for and exerts leadership in promoting and improving services to the mentally retarded/developmentally disabled population. Assesses the needs of the mentally retarded/developmentally disabled population, in cooperation with involved professionals and concerned citizens and coordinates efforts to meet the needs. Assists other agencies, organizations and committees to meet their needs in mental retardation and in developing supplemental programs they have identified as needed. Provides consultation to public and private agencies in the district, professionals, residential facilities managers for mentally retarded individuals, State Hospitals, and Human Service Centers. Works with public and private groups and professionals to develop residential facilities, foster home placements and sheltered employment for mentally retarded. Evaluates programs with a client-centered approach to insure that programs are providing individualized services. Performs casefinding activities, identifying mentally retarded children and adults and assisting them in receiving needed services. Advises clients and their families of local and statewide resources and provides consultation and assistance with placement, behavior and developmental problems. Plans and supervises a program of in-service training and staff development of mental health workers involved in mental retardation/development disabilities services. Attends state, regional and local professional conferences and seminars to keep informed of current developments in the field. Compiles statistics concerning mentally retarded/developmentally disabled population and prepares periodic activity reports.

3. Knowledges and abilities required.

a. Knowledge of the principles and practices of treatment of mentally retarded/developmentally disabled persons. Ability to plan and coordinate the mental retardation/developmental disabilities program and service delivery functions with available resources and involved professionals and lay persons. Knowledge of community structure including those aspects of political, economic and social activities capable of lending support to or participating in a comprehensive program of services to the mentally retarded.

b. Ability to understand developmental disabilities and their significance to the individual and the community. Ability to understand the diverse and distinct differences in needs of developmentally disabled persons and to relate to them without bias. Ability to work with and effectively enlist the cooperation and support in individuals and groups engaged in mental retardation services and related activities. Ability to design and carry out a program for the systematic collection, analysis, organization and presentation of information relative to community activities relating to mental retardation/developmental disabiliites. Ability to make independent decisions. Ability to communicate effectively, both orally and in writing.

4. Minimum qualifications of education and experience. Bachelor's degree from an accredited four-year college in sociology, psychology, social work, early childhood education or related field, and two years of related experience.

DPW 128 Auxiliary-Services group.

DD. Mental health worker.

1. Kind of work. An employee in this class is responsible for professional level psychological counseling and consultation services. The Mental Health Worker administers and interprets specialized psychological tests and makes psychological assessments of client's mental health. Although policies and procedures are outlined by a supervisor, the employee works with considerable independence in direct client work. Work is reviewed through conferences, written reports and results obtained. Performs related work as required.

2. Examples of work (illustrative only). Conducts individual family and group counseling and psychotherapy to children and adults to resolve current psychological problems or dysfunction. Conducts marriage counseling to modify psychologically the interaction of couples. Consults with human services professionals to determine the need or obtain guidance in the psychological study of specific clients. Performs psychological assessments of clients and individuals assigned by courts, social service workers, police, schools and other agencies as required. Administers psychological projective and psychometric tests and observes client to determine neuro-psychological state or pathological condition. Interprets the test results in terms of the purpose of the study and prepares written reports and makes recommendations on the basis of psychological findings. Conducts psychotherapy and case management of mentally ill patients on provisional or permanent discharge from state psychiatric hospitals. Intervenes in client crisis situations. Coordinates activities with social service agencies and other organizations and makes necessary arrangements for the utilization of these resources by clients. May conduct training workshops concerning mental illness. Consults with social service workers, physicians, teachers, ministers, other concerned professionals, lay persons and students to explain and promote mental health services and to obtain individual and public cooperation. May give testimony in connection with court cases. Attends regular staff conferences and in-service training sessions. Maintains a log of therapy sessions and client's progress and records essential information on client's records.

3. Knowledges and abilities required.

a. Knowledge of the principles, methods, procedures, and current trends and developments in psychological counseling. Knowledge of individual and group treatment techniques. Knowledge of methods and procedures used in the administration of psychological examinations. Knowledge of standard psychological tests. Knowledge of mental hygiene and the factors involved in assessment and treatment of psychological disorders.

b. Ability to communicate the findings of psychological examinations to clients, professional associates and other interested persons. Ability to establish and maintain effective relationships with other professional personnel, clients and the public. Ability to communicate effectively, both orally and in writing. Ability to keep detailed records and to make comprehensive reports.

4. Minimum qualifications of education and ex-

KEY: Existing rules are printed in standard type face. Proposed additions to existing rules are printed in **boldface**, while proposed deletions from existing rules are printed within [single brackets]. Additions to proposed rules are **underlined and boldfaced**, while deletions from proposed rules are printed within [[double brackets]].

perience. Possession of a master's degree from a recognized school in social work, clinical psychiatric nursing, counseling/clinical psychology or related field.

DPW 130 Medical nursing services group.

A. Physical therapist.

1. Kind of work. Under general nursing supervision, is responsible for providing fully-skilled physical therapy services to patients in their homes or in other areas where the agency offers services. A physical therapist assists the physician in evaluating patient's function through application of diagnostic and prognostic muscle, nerve, joint, and ability tests; counsels and teaches nurses, other health team members and family regarding physical therapy procedures and supportive activities aimed toward making the patient as self-sufficient as possible. Performs related work as required.

2. Examples of work (illustrative only). Visits homes to evaluate and perform physical therapy procedures on patients with disorders such as fractures, sprains, neurological disorders, cerebral, vascular and cardiac conditions according to patient's needs as prescribed by a physician. Assesses patient's progress and recommends a therapy program to the physician, including long and short term goals. Gives exercises to patients using various physical therapy procedures designed to correct muscular and neurological disorders. Teaches physical therapy procedures and supportive activities to patients and their families to be performed between visits. Improvises prosthetic and orthotic devices to aid patient. Confers with attending physician regarding patient's progress and treatment. Instructs other health team personnel working with patients, including Home Health Aides, in certain phases of physical therapy and in good body mechanics procedures. Provides advisory and consultative services to allied professional workers who share in responsibility for patient care. Interprets physical therapy to lay and professional groups through in-service talks and technique demonstrations. Participates in continuing education activities in the physical therapy field. Maintains patient's records and prepares reports on the patient's condition, reaction to therapy, and other information pertinent to the patient's care.

3. Knowledges, skills and abilities required.

a. Knowledge of the principles and methods used in the field of physiotherapy. Knowledge of the various types of mental and physical abnormalities.

b. Skill in using a wide variety of physiotherapeutic methods and apparatus. Skill in adapting available materials into practical prosthetic and orthotic equipment.

c. Ability to work with mentally and physically handicapped patients. Ability to recommend a physical therapy program based on patient needs. Ability to stimulate the interest of patients in the therapy program. Ability to evaluate the results of therapy. Ability to give instructions and supervise others in applying physical therapy techniques. Ability to maintain effective working relationships with physicians, staff members and patients and their families. Ability to maintain accurate records and prepare reports. Ability to communicate effectively, both orally and in writing.

4. Minimum qualifications of education and experience. Current licensure as a physical therapist in the State of Minnesota.

DPW 130 Medical nursing services group.

D. Homemaker/Home health aide.

1. Kind of work. Under supervision, instructs families in their homes in household skills and management; performs personal health care services in the home; works closely with the social worker or public health nurse in determining and evaluating the plan for care of clients, patients and their families; and performs related work as assigned. This work is performed under the supervision of a public health hurse or home health aide coordinator and/or a social worker, a social service supervisor, or a homemaker coordinator. Work requiring nursing judgment must be under the supervision of a nurse.

2. Examples of work (illustrative only). Plans menus, purchases food, and prepares and serves meals including special diets as required. Assists in budgeting and expense planning. Provides personal care to children and/or aged or disabled household members including bathing, dressing, feeding, personal hygiene, medication, and therapy as prescribed by the health staff. Teaches and instructs clients/patients in homemaking, child care, and personal care skills. Performs light housekeeping services including cleaning, washing, ironing, and mending of clothes and linens. Transports and escorts children and adults to schools, clinics, libraries, doctor's offices, and recreational facilities. Reports any changes in patient's or family's condition and prepares monthly progress reports on patient/family activities.

3. Knowledges and abilities required.

a. Knowledge of the principles of home management. Knowledge of elements of nutrition and meal planning. Knowledge of personal health care practices

and principles. Knowledge of first-aid and home safety. Knowledge of child-care methods. Knowledge of the process of aging and behavior of the aged. Knowledge of emotional problems accompanying illness. Knowledge of budgeting.

b. Ability to adapt to a variety of home and personal situations. Ability to maintain an interest in and project a sympathetic and cheerful attitude in caring for the sick at home. Ability to follow written and oral instructions. Ability to accept and profit by supervision. Ability to retain confidentiality of home conditions and situations. Ability to exercise tact and good judgment in working with children and adults.

4. Minimum qualifications of education and experience. Five years of successful nurses aid, child care, or homemaking experience. Note: The following may be required by county welfare and human service agencies:

1. Satisfactory physical condition as evidenced by a physical examination immediately prior to employment;

2. Completion of a training program for Home Health Aides prior to appointment to this class as set forth by the Social Security Act.

3. Possession of a valid Minnesota driver's license.

DPW 130 Medical nursing services group.

F. Home health aide.

1. Kind of work. Under the direction of a professional nurse or a Home-Health-Aide Coordinator, performs personal health-care services in home case situations not requiring nursing judgment or competence; performs such light housekeeping services as are essential for helping a [patient and his] family in a health crisis maintain a healthful, safe environment; and performs related work as assigned. [by a professional nurse.]

2. Examples of work (illustrative only). Performs household services necessary to patient's health care. Helps patient with activities of daily living, which may include bathing, toileting, feeding, dressing, and care of mouth and hair, and with communications, such as speech and writing skills. Changes patient's bed linen. Administers back rubs. Encourages patient's participation in and helps with prescribed exercises and activities. Helps patient follow through on use of special equipment. Assists with oral medication that can be self-administered. Reports any changes in the patient's mental or physical condition to the nurse and shares with the nurse and/or Home-Health-Aid Coordinator [her] **his/her** observations about the home situation.

3. Knowledges and abilities required.

a. Knowledge of personal health-care practices and principles. **Knowledge of child-care methods.** Knowledge of housekeeping skills. Knowledge of home management. Knowledge of elements of nutrition and meal planning. Knowledge of the process of aging and behavior of the aged. Knowledge of emotional problems accompanying illness.

b. Ability to maintain an interest in and project a sympathetic and cheerful attitude in caring for the sick at home. Ability to follow oral and written instructions. Ability to communicate **effectively** orally and in writing. [With patients and staff members.] Ability to accept and utilize supervision. Ability to adapt to a variety of home and personal situations. Ability to establish good working relationships with children and adults. Ability to retain confidenciality of home conditions and situations. Ability to exercise tact and good judgment in working with children and adults.

4. [Desirable] **Minimum** qualifications of education and experience. [Ability to read and write.]

a. Five years of successful [homemaking or] nurses aid, **child care, or homemaking** experience.

[Note 1: Some agencies may require completion of a basic training program for Home Health Aides as set forth by the Federal Health Insurance for the Aged prior to appointment to this class.]

b. Note: The following may be required by some agencies:

aa. Satisfactory physical condition as evidenced by a physical examination immediately prior to employment;

bb. Completion of a training program for Home Health Aides prior to appointment to this class as set forth by the Social Security Act.

cc. Possession of a valid Minnesota driver's license.

KEY: Existing rules are printed in standard type face. Proposed additions to existing rules are printed in **boldface**, while proposed deletions from existing rules are printed within [single brackets]. Additions to proposed rules are **underlined and boldfaced**, while deletions from proposed rules are printed within [[double brackets]].

DPW 131 Fiscal group.

H. Director of business management **II.**

1. Kind of work. Under broad administrative direction of the welfare director, plans, develops and directs a fiscal management program involving a large and complex system of accounts; directs the accounting, budgeting, and disbursing functions for all departments and institutions; and plans, develops, and directs the support services to include: plant maintenance purchasing, communications, supportive clerical needs, and performs related work as assigned.

2. Examples of work (illustrative only). Formulates and recommends policies and procedures to increase the effectiveness of the agency's fiscal management practices and other support services. Establishes and administers procedures for the accounting and machine processing of information. Directs the preparation and maintenance of the fiscal records of the agency. Plans and directs a program of periodic reporting of the fiscal position of the agency. Supervises preparation of the budget projections and assesses the fiscal impact of program changes. Plans and directs the installation and maintenance of fiscal control procedures. Confers with the director and department heads on the establishment of adequate fiscal and support services procedures and services to operating depatments. Plans and recommends studies for improving the fiscal management program and agency's support services. Recommends changes in the organization and staffing of business management division. Plans, installs, and directs the policies or procedures required for a coordinated program of fiscal management in all institutions and departments. Establishes performance standards and evaluates individual performance.

3. Knowledges and abilities required.

a. Thorough knowledge of the modern principles and practices of business management in a large-scale governmental agency. Thorough knowledge of accounting theory and approved methods of handling a wide variety of problems of business management. Thorough knowledge of the principles and practices of effective administration. Thorough knowledge of office procedures, methods and equipment. Knowledge of the uses and practical application of data processing equipment. Knowledge of the scope and purpose of departmental operations. Knowledge of the source of public funds and the principles of public finance. Knowledge of the principles of economics.

b. Ability to do original work in developing and maintaining a complex accounting system. Ability to coordinate the fiscal management functions of the several institutions and departments. Ability to plan, assign, and coordinate the work of a large number of employees. Ability to evaluate the work of others and to develop staff. Ability to establish good working relationships with staff members, other departments and agencies, and the public.

4. Minimum qualifications of education and experience. Graduation from an accredited four-year college, with a major in accounting, business administration, or mathematics, and five years of highly responsible supervisory accounting experience.

DPW 131 Fiscal group.

I. Director of business management I.

1. Kind of work. Under administrative direction, an employee in this class is responsible for directing a fiscal management program involving a system of accounts in a multi-county agency. A Director of Business Management I performs responsible professional accounting work which involves directing the accounting, budgeting and disbursing functions for all human services programs. The employee provides technical and supervisory financial support to carry out policies and programs established by the Human Services Board. Work is performed under the administrative direction of a Human Services Director, with considerable latitude for developing, implementing and administering financial methods and procedures. Work is reviewed through conferences, written reports and objectives achieved. Performs related work as required.

2. Examples of work (illustrative only). Formulates and recommends policies and procedures to increase the effectiveness of the agency's fiscal management practices and other support services. Directs all business management and accounting functions of the agency so that adequate financial records and fiscal controls are maintained. Plans, installs and directs the policies and procedures required for a coordinated program of fiscal management. Confers with the director and program managers on the establishment of adequate fiscal and support services procedures. Organizes, assigns and establishes objectives of the work of the fiscal section and supervises section personnel. Recruits, interviews and recommends additions to staff and assignment of personnel. Evaluates performance of staff assigned to section. Prepares and administers the annual budget, conferring with the Director and program supervisors on projected needs. Provides fiscal assistance and guidance to the Director on a continuing basis to ensure efficient and effective fiscal management. Provides coordination with county, state and federal agencies relating to financial matters to keep informed on matters pertaining to policies, procedures and programs which may have an effect on the financial operation of the agency. Develops and maintains accounting and statistical procedures which satisfy county, state and federal auditing and reporting requirements. Prepares program cost studies

and analysis. Plans and directs a program of periodic reporting of fiscal position of the agency.

3. Knowledges, skills and abiliites required.

a. Knowledge of modern business management and accounting principles and practices. Knowledge of state and federal government accounting, auditing and reporting requirements. Knowledge of the source of public funds and the principles of public finance. Knowledge of principles and practices of effective administration. Knowledges of office procedures, methods and equipment. Knowledge of data-processing techniques.

b. Ability to develop and implement procedures to increase the efficiency and effectiveness of the fiscal program. Ability to prepare and interpret complex fiscal records and reports, recognize problems and effect solutions. Ability to plan, assign and direct the work of accounting employees. Ability to communicate effectively both orally and in writing.

4. Minimum qualifications of education and experience. Graduation from an accredited four-year college with a major in accounting or business administration and four years of full-time paid professional experience as an accountant or auditor, at least one of which must have been in a supervisory capacity.

DPW 132 Clerical group.

N. Information system specialist.

1. Kind of work. Under general supervision, performs varied clerical tasks relating to electronic data computer reporting systems which require some independent judgment; and performs related work as assigned.

2. Examples of work (illustrative only). Reviews accuracy of activity sheets of staff before computer input. Sets up new codes for new programs being put into computer. Orientates new employees on completion of reports for computer. Arranges meetings with staff members to review errors in their reports and methods of correction. Makes corrections of reports before computer input. Operates management information system, including regular update of data base. Programs regular state aid local reports. Reviews master report for accuracy. Maintains card catalog and other file systems. Maintains correspondence as necessary. Attends meetings to coordinate program to computer reporting system. Reviews bills for accuracy where computer system is purchased. May keypunch for input into computer system.

3. Knowledges and abilities required.

a. Knowledge of office procedures, practices and equipment. Knowledge of computer reporting systems.

b. Ability to communicate both orally and in writing. Ability to maintain good working relationships with co-workers and supervisory staff. Ability to reduce complex assignments to an orderly system of procedures.

4. Minimum qualifications of education and experience.

a. High school diploma or the equivalent and two years of experience in responsible and difficult clerical work requiring latitude for independent judgment.

b. Completion of two years of study at an accredited two or four-year college or similar institution. When keypunching is essential as a job responsibility, selective certification will be made on the basis of possession of this ability.

DPW 135 Maintenance and trades group.

G. Bus driver.

1. Kind of work. Operates a vehicle carrying ten or more passengers to and from designated locations, may also transport meals and materials as required, maintains a cash supply and makes change for passengers, and may be responsible for having the vehicle serviced on a regular basis, performs related work as required.

2. Examples of work (illustrative only). Transports passengers. Maintains schedule of arrivals and departures. Accepts cash fares and makes change for fares as required. Keeps vehicle filled with gas and oil. Has vehicle serviced on regular maintenance basis. Transports meals to non-ambulatory clients. Assists passengers into and out of vehicle. Performs related work as required.

3. Knowledges and abilities required.

a. Working knowledge of laws and regulations relating to the operation of vehicle within the State of

KEY: Existing rules are printed in standard type face. Proposed additions to existing rules are printed in **boldface**, while proposed deletions from existing rules are printed within [single brackets]. Additions to proposed rules are **underlined and boldfaced**, while deletions from proposed rules are printed within [[double brackets]].

Minnesota. Knowledge of area of operation and familiarity with roads and highways.

b. Ability to drive vehicle assigned. Ability to make correct change and balance fares and cash at end of day. Ability to understand and carry out simple instructions.

4. Minimum qualifications. Ability to read and write English. Possession of a valid Minnesota Class B license. (Class B license covers all vehicles transporting 10 or more passengers *except* school buses where an endorsement is necessary.) Ability to make simple arithmetic computations.

Sub-Chapter D — Compensation Plan

Approximate Monthly Salaries

DPW 140 Compensation plan.

A. Professional.

1. Plan A*.

a. Class of positions.

	1	2	3	4	5	6	7	8	9	10
Accountant I	1008	1055	1102	1150	1203	1261	1319	1377		
Accountant II	1079	1126	1177	1232	1290	1348	1409	1472	1538	
Adm. Asst. I	1102	1150	1203	1261	1319	1377	1440	1503	1572	1646
Adm. Asst. II	1203	1261	1319	1377	1440	1503	1572	1646	1720	1799
Adm. Asst. III	1409	1472	1538	1609	1683	1760	1839	1923	2013	
Adm. Services Director	1538	1609	1683	1760	1839	1923	2013	2105	2200	
Asst. Human Services Dir.	**1538**	**1609**	**1683**	**1760**	**1839**	**1923**	**2013**	**2105**	**2200**	
Asst. Welfare Director	1760	1839	1923	2013	2105	2200	2297	2398	2503	
Assoc. M./&-P. Analyst	902	944	987	1032						
Auditor	1126	1177	1232	1290	1348	1409	1472	1538	1609	1683
Chemical Dependency Coord.	**1032**	**1179**	**1126**	**1177**	**1232**	**1290**	**1348**	**1409**	**1472**	**1538**
Collection Services Supr. II	1102	1150	1203	1261	1319	1377	1440	1503	1572	1646
Comm. Health Serv. Supvr.	**1079**	**1126**	**1177**	**1232**	**1290**	**1348**	**1409**	**1472**	**1538**	
Community-Rela. Spec.	1079	1126	1177	1232	1290	1348	1409	1472	1538	
Computer Programmer	902	944	987	1032	1079	1126	1177	1232		
Day-Care-Center Supr.	1126	1177	1232	1290	1348	1409	1472	1538	1609	
Dev. Achieve. Center Dir.	**944**	**987**	**1032**	**1079**	**1126**	**1177**	**1232**	**1290**	**1348**	**1409**
Dev. Achieve. Center Teacher	**906**	**947**	**991**	**1036**	**1084**	**1133**	**1182**	**1236**	**1294**	**1355**
Dev. Disabilities Coord.	**944**	**987**	**1032**	**1079**	**1126**	**1177**	**1232**	**1290**	**1348**	**1409**
Dir. of Assessment Systems	**1203**	**1261**	**1319**	**1377**	**1440**	**1503**	**1572**	**1646**	**1720**	**1799**
Dir. of Business Mgmt. I	**1377**	**1440**	**1503**	**1572**	**1646**	**1720**	**1799**	**1878**		
Dir. of Bus. Mgmt. **II**	1538	1609	1683	1760	1839	1923	2013	2105	2200	
Director of Finan. Assist.	1538	1609	1683	1760	1839	1923	2013	2105	2200	
Director of Planning	1538	1609	1683	1760	1839	1923	2013	2105	2200	
Dir. of Pub.-Hlth. Nurs. I	1079	1126	1177	1232	1290	1348	1409	1472	1538	
Dir. of Soc. Serv.	1538	1609	1683	1760	1839	1923	2013	2105	2200	
Dir. of Support Services	1538	1609	1683	1760	1839	1923	2013	2105	2200	
Education Supervisor	1079	1126	1177	1232	1290	1348	1409	1472	1538	
Emp. Guid. Couns. I	863	902	944	987	1032	1079	1126	1177	1232	
Emp. Guid. Couns. II	902	944	987	1032	1079	1126	1177	1232	1290	
Emp. Guid. Couns. III	944	987	1032	1079	1126	1177	1232	1290	1348	
Home Care Coordinator	987	1032	1079	1126	1177	1232	1290	1348		
Home Maker Coordinator II	987	1032	1079	1126	1177	1232	1290	1348		
Home Maker Supervisor	1079	1126	1177	1232	1290	1348	1409	1472	1538	
Human Services Dir. I	**1319**	**1377**	**1440**	**1503**	**1572**	**1646**	**1720**	**1799**	**1878**	**1968**
Human Services Dir. II	**1538**	**1609**	**1683**	**1760**	**1839**	**1923**	**2013**	**2105**	**2200**	
Human Services Dir. III	**1683**	**1760**	**1839**	**1923**	**2013**	**2105**	**2200**	**2297**	**2398**	
Human Services Supvr. I	**1102**	**1150**	**1203**	**1261**	**1319**	**1377**	**1440**	**1503**	**1572**	**1646**
Marriage Counselor	1126	1177	1232	1290	1348	1409	1472	1538	1609	
Med.-Care Advisor	944	987	1032	1079	1126	1177	1232	1290	1348	1409
Med.-Serv. Adm.	1538	1609	1683	1760	1839	1923	2013	2105	2200	2297
Mental Health Worker	**1032**	**1079**	**1126**	**1177**	**1232**	**1290**	**1348**	**1409**	**1472**	
Meth.-&-Proc. Analyst	1032	1079	1126	1177	1232	1290	1348	1409	1472	1538
Meth.-&-Proc. Supvr.	1232	1290	1348	1409	1472	1538	1609	1683	1760	
Nursing Care Advisor	944	987	1032	1079	1126	1177	1232	1290	1348	
Occupa. Supvr.-Inst. I	826	863	902	944	987	1032	1079	1126	1177	1232

*The salary steps herein shall not include any amounts paid by any county welfare board under the provisions of Minnesota Statutes, Section 471.61.

Occupa. Supvr.-Inst. II	944	987	1032	1079	1126	1177	1232	1290	1348	1409
Officer Manager	863	902	944	987	1032	1079	1126	1177	1232	
Personnel Officer I	863	902	944	987	1032	1079	1126	1177	1232	1290
Personnel Officer II	1203	1261	1319	1377	1440	1503	1572	1646	1720	
Physical Therapist	**902**	**944**	**987**	**1032**	**1079**	**1126**	**1177**			
Policy/Program Analyst	**1203**	**1261**	**1319**	**1377**	**1440**	**1503**	**1572**	**1646**	**1720**	**1799**
Programmer Analyst	1032	1079	1126	1177	1232	1290	1348	1409		
Psychologist I	1032	1079	1126	1177	1232	1290	1348	1409	1472	
Psychologist II	1232	1290	1348	1409	1472	1538	1609	1683	1760	
Psychologist III	**1440**	**1503**	**1572**	**1646**	**1720**	**1799**	**1878**	**1968**		
Psychologist IV	**1572**	**1646**	**1720**	**1799**	**1878**	**1968**	**2057**	**2152**		
Public Health Nurse	902	944	987	1032	1079	1126	1177			
Pub.-Hlth. Nurs. (Team Leader)	944	987	1032	1079	1126	1177	1232			
Registered Nurse										
A.A. degree or 3 yr. Dip.	826	863	902	944	987	1032	1079			
B.S. degree	863	902	944	987	1032	1079				
Senior Public Health Nurse	987	1032	1079	1126	1177	1232	1290			
Social Worker I	863	902	944	987						
Social Worker II	944	987	1032	1079	1126	1177	1232	1290	1348	1409
Social Worker III	1032	1079	1126	1177	1232	1290	1348	1409	1472	1538
Social Worker Trainee	789									
Soc.-Serv. Supvr. I	1102	1150	1203	1261	1319	1377	1440	1503	1572	1646
Soc.-Serv. Supvr. II	1203	1261	1319	1377	1440	1503	1572	1646	1720	1799
Soc.-Serv. Supvr. III	1409	1472	1538	1609	1683	1760	1839	1923	2013	
Soc.-Serv. Supvr. Trainee	1055	1102	1150	1203	1261	1319				
Staff-Trng. Supvr. I	1177	1232	1290	1348	1409	1472	1538	1609	1683	
Staff-Trng. Supvr. II	1290	1348	1409	1472	1538	1609	1683	1760	1839	
Student Soc. Worker (Intern)	Rate proposed by appointing authority.									
Student Soc. Worker (SWEP)	2 yrs. college $2.60/hour; 3 yrs. college $2.85/hour.									
Systems Prog.-Analyst	1177	1232	1290	1348	1409	1472	1538	1609		
Trainee	Rate proposed by appointing authority and approved by the Merit System Supervisor and the Commissioner of Public Welfare.									
Vol.-Serv. Coord. I	863	902	944	987	1032	1079	1126	1177	1232	
Vol.-Serv. Coord. II	1079	1126	1177	1232	1290	1348	1409	1472	1538	
Welfare Director I	1203	1261	1319	1377	1440	1503	1572	1646	1720	1799
Welfare Director II	1319	1377	1440	1503	1572	1646	1720	1799	1878	1968
Welfare Director III	1538	1609	1683	1760	1839	1923	2013	2105	2200	
Welfare Director IV	1683	1760	1839	1923	2013	2105	2200	2297	2398	
Welfare Director V	2297	2398	2503	2616	2734	2857	2986	3127	3268	
Work-Exp. & Trng. Spec.	1079	1126	1177	1232	1290	1348	1409	1472	1538	

2. Plan B*

a. Class of positions	1	2	3	4	5	6	7	8	9	10
Accountant I	1008	1055	1102	1150	1203	1261	1319	1377		
Accountant II	1126	1177	1232	1290	1348	1409	1472	1538	1609	
Adm. Asst. I	1150	1203	1261	1319	1377	1440	1503	1572	1646	1720
Adm. Asst. II	1261	1319	1377	1440	1503	1572	1646	1720	1799	1878
Adm. Asst. III	1472	1538	1609	1683	1760	1839	1923	2013	2105	
Adm. Services Director	1609	1683	1760	1839	1923	2013	2105	2200	2297	
Asst. Human Services Dir.	**1538**	**1609**	**1683**	**1760**	**1839**	**1923**	**2013**	**2105**	**2200**	
Asst. Welfare Director	1839	1923	2013	2105	2200	2297	2398	2503	2616	
Assoc. M.-&-P. Analyst	944	987	1032	1079						
Auditor	1177	1232	1290	1348	1409	1472	1538	1609	1683	1760
Chemical Dependency Coord.	**1079**	**1126**	**1177**	**1232**	**1290**	**1348**	**1409**	**1472**	**1538**	**1609**
Collection Services Supr. II	1150	1203	1261	1319	1377	1440	1503	1572	1646	1720
Comm. Health Serv. Supvr.	**1126**	**1177**	**1232**	**1290**	**1348**	**1409**	**1472**	**1538**	**1609**	
Community-Rela. Spec.	1126	1177	1232	1290	1348	1409	1472	1538	1609	
Computer Programmer	944	987	1032	1079	1126	1177	1232	1290		
Day-Care-Center Supvr.	1177	1232	1290	1348	1409	1472	1538	1609	1683	
Dev. Achieve. Center Dir.	**987**	**1032**	**1079**	**1126**	**1177**	**1232**	**1290**	**1348**	**1409**	**1472**
Dev. Achieve. Center Teacher	**947**	**991**	**1036**	**1084**	**1133**	**1182**	**1236**	**1294**	**1355**	**1415**
Dev. Disabilities Coord.	**987**	**1032**	**1079**	**1126**	**1177**	**1232**	**1290**	**1348**	**1409**	**1472**

*The salary steps herein shall not include any mounts paid by any county welfare board under the provisions of Minnesota Statutes, Section 471.61.

KEY: Existing rules are printed in standard type face. Proposed additions to existing rules are printed in **boldface**, while proposed deletions from existing rules are printed within [single brackets]. Additions to proposed rules are **underlined and boldfaced**, while deletions from proposed rules are printed within [[double brackets]].

Dir. of Assessment Systems	**1261**	**1319**	**1377**	**1440**	**1503**	**1572**	**1646**	**1720**	**1799**	**1878**
Dir. of Business Mgmt. I	**1377**	**1440**	**1503**	**1572**	**1646**	**1720**	**1799**	**1878**		
Dir. of Business Mgmt. **II**	1609	1683	1760	1839	1923	2013	2105	2200	2297	
Director of Finan. Assist.	1609	1683	1760	1839	1923	2013	2105	2200	2297	
Director of Planning	1609	1683	1760	1839	1923	2013	2205	2200	2297	
Dir. of Pub.-Hlth. Nurse I	1126	1177	1232	1290	1348	1409	1472	1538	1609	
Dir. of Soc. Serv.	1609	1683	1760	1839	1923	2013	2105	2200	2297	
Dir. of Support Services	1609	1683	1760	1839	1923	2013	2105	2200	2297	
Education Supervisor	1126	1177	1232	1290	1348	1409	1472	1538	1609	
Emp. Guid. Couns. I	902	944	987	1032	1079	1126	1177	1232	1290	
Emp. Guid. Couns. II	944	987	1032	1079	1126	1177	1232	1290	1348	
Emp. Guid. Couns. III	987	1032	1079	1126	1177	1232	1290	1348	1409	
Home Care Coordinator	1032	1079	1126	1177	1232	1290	1348	1409		
Home Maker Coordinator II	1032	1079	1126	1177	1232	1290	1348	1409		
Home Maker Supervisor	1126	1177	1232	1290	1348	1409	1472	1538	1609	
Human Services Dir. I	**1319**	**1377**	**1440**	**1503**	**1572**	**1646**	**1720**	**1799**	**1878**	**1968**
Human Services Dir. II	**1538**	**1609**	**1683**	**1760**	**1839**	**1923**	**2013**	**2105**	**2200**	
Human Services Dir. III	**1683**	**1760**	**1839**	**1923**	**2013**	**2105**	**2200**	**2297**	**2398**	
Human Services Supvr. I	**1150**	**1203**	**1261**	**1319**	**1377**	**1440**	**1503**	**1572**	**1646**	**1720**
Marriage Counselor	1177	1232	1290	1348	1409	1472	1538	1609	1683	
Med.-Care Advisor	987	1032	1079	1126	1177	1232	1290	1348	1409	1472
Med.-Serv. Adm.	1609	1683	1760	1839	1923	2013	2105	2200	2297	2398
Mental Health Worker	**1079**	**1126**	**1177**	**1232**	**1290**	**1348**	**1409**	**1472**	**1538**	
Meth.-&-Proc. Analyst	1079	1126	1177	1232	1290	1348	1409	1472	1538	1609
Meth.-&-Proc. Supvr.	1290	1348	1409	1472	1538	1609	1683	1760	1839	
Nursing Care Advisor	987	1032	1079	1126	1177	1232	1290	1348	1409	
Occupa. Supvr.-Inst. I	863	902	944	987	1032	1079	1126	1177	1232	1290
Occupa. Supvr.-Inst. II	987	1032	1079	1126	1177	1232	1290	1348	1409	1472
Office Manager	902	944	987	1032	1079	1126	1177	1232	1290	
Personnel Officer I	920	944	987	1032	1079	1126	1177	1232	1290	1348
Personnel Officer II	1261	1319	1377	1440	1503	1572	1646	1720	1799	
Physical Therapist	**944**	**987**	**1032**	**1079**	**1126**	**1177**	**1232**			
Policy/Program Analyst	**1261**	**1319**	**1377**	**1440**	**1503**	**1572**	**1646**	**1720**	**1799**	**1878**
Programmer Analyst	1079	1126	1177	1232	1290	1348	1409	1472		
Psychologist I	1079	1126	1177	1232	1290	1348	1409	1472	1538	
Psychologist II	1290	1348	1409	1472	1538	1609	1683	1760	1839	
Psychologist III	**1503**	**1572**	**1646**	**1720**	**1799**	**1878**	**1968**	**2057**		
Psychologist IV	**1646**	**1720**	**1799**	**1878**	**1968**	**2057**	**2152**	**2247**		
Public Health Nurse	944	987	1032	1079	1126	1177	1232			
Pub.-Hlth. Nurse (Team Leader)	987	1032	1079	1126	1177	1232	1290			
Registered Nurse										
A.A. degree or 3 yr. Dip.	863	902	944	987	1032	1079	1126			
B.S. degree	902	944	987	1032	1079	1126				
Senior Public-Health Nurse	1032	1079	1126	1177	1232	1290	1348			
Social Worker I	902	944	987	1032						
Social Worker II	987	1032	1079	1126	1177	1232	1290	1348	1409	1472
Social Worker III	1079	1126	1177	1232	1290	1348	1409	1472	1538	1609
Social Worker Trainee	789									
Soc.-Serv. Supvr. I	1150	1203	1261	1319	1377	1440	1503	1572	1646	1720
Soc.-Serv. Supvr. II	1261	1319	1377	1440	1503	1572	1646	1720	1799	1878
Soc.-Serv. Supvr. III	1472	1538	1609	1683	1760	1839	1923	2013	2105	
Soc.-Serv. Supvr. Trainee	1102	1150	1203	1261	1319	1377				
Staff-Trng. Supvr. I	1232	1290	1348	1409	1472	1538	1609	1683	1760	
Staff-Trng. Supvr. II	1348	1409	1472	1538	1609	1683	1760	1839	1923	
Student Soc. Worker (Intern)	Rate proposed by appointing authority.									
Student Soc. Worker (SWEP)	2 yrs. College $2.60/hour; 3 yrs. college $2.85/hour.									
Systems Prg. Analyst	1232	1290	1348	1409	1472	1538	1609	1683		
Trainee	Rate proposed by appointing authority and approved by the Merit System Supervisor and the Commissioner of Public Welfare.									
Vol. Serv. Coord. I	902	944	987	1032	1079	1126	1177	1232	1290	
Vol. Serv. Coord. II	1126	1177	1232	1290	1348	1409	1472	1538	1609	
Welfare Director I	1203	1261	1319	1377	1440	1503	1572	1646	1720	1799
Welfare Director II	1319	1377	1440	1503	1572	1646	1720	1799	1878	1968
Welfare Director III	1538	1609	1683	1760	1839	1923	2013	2105	2200	
Welfare Director IV	1683	1760	1839	1923	2013	2105	2200	2297	2398	
Welfare Director V	2297	2398	2503	2616	2734	2857	2986	3127	3268	
Work-Exp. & Trng. Spec.	1126	1177	1232	1290	1348	1409	1472	1538	1609	

*The salary steps herein shall not include any amounts paid by any county welfare board under the provisions of Minnesota Statutes, Secion 471.61.

3. Plan C*

c. Class of positions	1	2	3	4	5	6	7	8	9	10
Accountant I	1008	1055	1102	1150	1203	1261	1319	1377		
Accountant II	1177	1232	1290	1348	1409	1472	1538	1604	1683	
Adm. Asst. I	1203	1261	1319	1377	1440	1503	1572	1646	1720	1799
Adm. Asst. II	1319	1377	1440	1503	1572	1646	1720	1799	1878	1968
Adm. Asst. III	1538	1609	1683	1760	1839	1923	2013	2105	2200	
Adm. Services Director	1683	1760	1839	1923	2013	2105	2200	2297	2398	
Asst. Human Services Dir.	**1538**	**1609**	**1683**	**1760**	**1839**	**1923**	**2013**	**2105**	**2200**	
Asst. Welfare Director	1923	2013	2105	2200	2297	2398	2503	2616	2734	
Assoc. M-&-P. Analyst	987	1032	1079	1126						
Auditor	1232	1290	1348	1409	1472	1538	1609	1683	1760	1839
Chemical Dependency Coord.	**1126**	**1177**	**1232**	**1290**	**1348**	**1490**	**1472**	**1538**	**1609**	**1683**
Collection Serv. Supvr. II	1203	1261	1319	1377	1440	1503	1572	1646	1720	1799
Comm. Health Serv. Supr.	**1177**	**1232**	**1290**	**1348**	**1409**	**1472**	**1538**	**1609**	**1683**	
Community-Rela. Spec.	1177	1232	1290	1348	1409	1472	1538	1609	1683	
Computer Programmer	987	1032	1079	1126	1177	1232	1290	1348		
Day-Care-Center Supr.	1232	1290	1348	1409	1472	1538	1609	1683	1760	
Dev. Achieve. Center Dir.	**1032**	**1079**	**1126**	**1177**	**1232**	**1290**	**1348**	**1409**	**1472**	**1538**
Dev. Achieve. Center Teacher	**991**	**1036**	**1084**	**1133**	**1182**	**1236**	**1294**	**1355**	**1415**	**1479**
Dev. Disabilities Coord.	**1032**	**1079**	**1126**	**1177**	**1232**	**1290**	**1348**	**1409**	**1472**	**1538**
Dir. of Assessment Systems	**1319**	**1377**	**1440**	**1503**	**1572**	**1646**	**1720**	**1799**	**1878**	**1968**
Dir. of Business Mgmt. I	**1377**	**1440**	**1503**	**1572**	**1646**	**1720**	**1799**	**1878**		
Dir. of Business Mgmt. **II**	1683	1760	1839	1923	2013	2105	2200	2297	2398	
Director of Finan. Assist.	1683	1760	1839	1923	2013	2105	2200	2297	2398	
Director of Planning	1683	1760	1839	1923	2013	2105	2200	2297	2398	
Dir. of Pub.-Hlth. Nurse I	1177	1232	1290	1348	1409	1472	1538	1609	1683	
Dir. of Soc. Services	1683	1760	1839	1923	2013	2105	2200	2297	2398	
Dir. of Support Services	1683	1760	1839	1923	2013	2105	2200	2297	2398	
Education Supervisor	1177	1232	1290	1348	1409	1472	1538	1609	1683	
Emp. Guid. Couns. I	944	987	1032	1079	1126	1177	1232	1290	1348	
Emp. Guid. Couns. II	987	1032	1079	1126	1177	1232	1290	1348	1409	
Emp. Guid. Couns. III	1032	1079	1126	1177	1232	1290	1348	1409	1472	
Home Care Coordinator	1079	1126	1177	1232	1290	1348	1409	1472		
Home Maker Coordinator II	1079	1126	1177	1232	1290	1348	1409	1472		
Home Maker Supervisor	1177	1232	1290	1348	1409	1472	1538	1609	1683	
Human Services Dir. I	**1319**	**1377**	**1440**	**1503**	**1572**	**1646**	**1720**	**1799**	**1878**	**1968**
Human Services Dir. II	**1538**	**1609**	**1683**	**1760**	**1839**	**1923**	**2013**	**2105**	**2200**	
Human Services Dir. III	**1683**	**1760**	**1839**	**1923**	**2013**	**2105**	**2200**	**2297**	**2398**	
Human Services Supvr. I	**1203**	**1261**	**1319**	**1377**	**1440**	**1503**	**1572**	**1646**	**1720**	**1799**
Marriage Counselor	1232	1290	1348	1409	1472	1538	1609	1683	1760	
Med.-Care Advisor	1032	1079	1126	1177	1232	1290	1348	1409	1472	1538
Med.-Serv. Adm.	1683	1760	1839	1923	2013	2105	2200	2297	2398	2503
Mental Health Worker	**1126**	**1177**	**1232**	**1290**	**1348**	**1409**	**1472**	**1538**	**1609**	
Meth.-&-Proc. Analyst	1126	1177	1232	1290	1348	1409	1472	1538	1609	1683
Meth.-&-Proc. Supvr.	1348	1409	1472	1538	1609	1683	1760	1839	1923	
Nursing Care Advisor	1032	1079	1126	1177	1232	1290	1348	1409	1472	
Occupa. Supvr.-Inst. I	902	944	987	1032	1079	1126	1177	1232	1290	1348
Occupa. Supvr.-Inst. II	1032	1079	1126	1177	1232	1290	1348	1409	1472	1538
Office Manager	944	987	1032	1079	1126	1177	1232	1290	1348	
Personnel Officer I	944	987	1032	1079	1126	1177	1232	1290	1348	1409
Personnel Officer II	1319	1377	1440	1503	1572	1646	1720	1799	1878	
Physical Therapist	**1008**	**1055**	**1102**	**1150**	**1203**	**1261**	**1319**			
Policy/Program Analyst	**1319**	**1377**	**1440**	**1503**	**1572**	**1646**	**1720**	**1799**	**1878**	**1968**
Programmer Analyst	1126	1177	1232	1290	1348	1409	1472	1538		
Psychologist I	1126	1177	1232	1290	1348	1409	1472	1538	1609	
Psychologist II	1348	1409	1472	1538	1609	1683	1760	1839	1923	
Psychologist III	**1572**	**1646**	**1720**	**1799**	**1878**	**1968**	**2057**	**2152**		
Psychologist IV	**1720**	**1799**	**1878**	**1968**	**2057**	**2152**	**2247**	**2347**		
Public Health Nurse	1008	1055	1102	1150	1203	1261	1319			
Pub.-Hlth. Nurse (Team Leader)	1055	1102	1150	1203	1261	1319	1377			

*The salary steps herein shall not include any amounts paid by any county welfare board under the provisions of Minnesota Statutes, Section 471.61.

KEY: Existing rules are printed in standard type face. Proposed additions to existing rules are printed in **boldface**, while proposed deletions from existing rules are printed within [single brackets]. Additions to proposed rules are **underlined and boldfaced**, while deletions from proposed rules are printed within [[double brackets]].

Registered Nurse										
A.A. degree or 3 yr. Dip.	923	965	1008	1055	1102	1150	1203			
B.S. degree	965	1008	1055	1102	1150	1203				
Senior Public-Health Nurse	1102	1150	1203	1261	1319	1377	1440			
Social Worker I	944	987	1032	1079						
Social Worker II	1032	1079	1126	1177	1232	1290	1348	1409	1472	1538
Social Worker III	1126	1177	1232	1290	1348	1490	1472	1538	1609	1683
Social Worker Trainee	789									
Soc.-Serv. Supvr. I	1203	1261	1319	1377	1440	1503	1572	1646	1720	1799
Soc.-Serv. Supvr. II	1319	1377	1440	1503	1572	1646	1720	1799	1878	1968
Soc.-Serv. Supvr. III	1538	1609	1683	1760	1839	1923	2013	2105	2200	
Soc.-Serv. Supvr. Trainee	1150	1203	1261	1319	1377	1440				
Staff-Trng. Supvr. I	1290	1348	1409	1472	1538	1609	1683	1760	1839	
Staff-Trng. Supvr. II	1409	1472	1538	1609	1683	1760	1839	1923	2013	
Student Soc. Worker (Intern)	Rate proposed by appointing authority.									
Student Soc. Worker (SWEP)	2 yrs. college $2.60/hour; 3 yrs. college $2.85/hour.									
Systems Prog.-Analyst	1290	1348	1409	1472	1538	1609	1683	1760		
Trainee	Rate proposed by appointing authority and approved by the Merit System Supervisor and the Commissioner of Public Welfare.									
Vol. Serv. Coord. I	944	987	1032	1079	1126	1177	1232	1290	1348	
Vol. Serv. Coord. II	1177	1232	1290	1348	1409	1472	1538	1609	1683	
Welfare Director I	1203	1261	1319	1377	1440	1503	1572	1646	1720	1799
Welfare Director II	1319	1377	1440	1503	1572	1646	1720	1799	1878	1968
Welfare Director III	1538	1609	1683	1760	1839	1923	2013	2105	2200	
Welfare Director IV	1683	1760	1839	1923	2013	2105	2200	2297	2398	
Welfare Director V	2297	2398	2503	2616	2734	2857	2986	3127	3268	
Work Exp. & Trng. Spec.	1177	1232	1290	1348	1409	1472	1538	1609	1683	

B. Support Personnel

1. Plan A*

a. Class of positions

	1	2	3	4	5	6	7	8	9
Accounting Officer I	755	789	826	863	902	944	987	1032	1079
Accounting Officer II	826	863	902	944	987	1032	1079	1126	1177
Accounting Officer III	944	987	1032	1079	1126	1177	1232	1290	1348
Asst. Resid. Facil. Opr.(s)	**517**	**538**	**564**	**590**	**617**	**644**	**675**	**707**	
Case Aide	631	660	691	723	755	789			
Collection Services Supvr. I	1008	1055	1102	1150	1203	1261	1319	1377	
Comm.-Service Aide	396	412	433	454	475	496	517		
Coord. of Aging	644	675	707	739	771	807	844	881	
Counselor on Alcoholism	826	863	902	944	987	1032			
Dev. Achieve. Center Instr.	**538**	**564**	**590**	**617**	**644**	**675**			
Financial-Asst. Specialist	807	844	881	923	965	1008	1055	1102	
Financial-Asst. Supvr. I	881	923	965	1008	1055	1102	1150	1203	1261
Financial-Asst. Supvr. II	1008	1055	1102	1150	1203	1261	1319	1377	
Financial Worker I	631	660	691	723	755	789			
Financial Worker II	707	739	771	807	844	881	923	965	1008
Group Home Parents	538	564	590	617	644	675	707	739	
Home Health Aide	496	517	538	564	590	617	644		
Home Health Aide Coord.	707	739	771	807	844	881	923		
Home Maker Coordinator I	707	739	771	807	844	881	923		
Homemaker/Home Health Aide	**496**	**517**	**538**	**564**	**590**	**617**	**644**		
Housekeepr	Hourly rate proposed by appointing authority and approved by the Merit System Supervisor and the Commissioner of Public Welfare, and not less than $2.10/hour.								
Home Maker I	496	517	538	564	590	617	644		
Home Maker II	538	564	590	617	644	675	707	739	
Licensed Practical Nurse	644	675	707	739	771				
Resources Examiner I	789	826	863	902	944	987	1032	1079	1126
Resources Examiner II	1008	1055	1102	1150	1203	1261	1319		
Resources Examiner III	1102	1150	1203	1261	1319	1377	1440		
Senior Case Aide	707	739	771	807	844	881	923	965	1008
Senior Citizen's Aide	**396**	**412**	**433**	**454**	**475**	**496**	**517**		
Transportation Coordinator	**660**	**691**	**723**	**755**	**789**	**826**	**863**	**902**	

B. Support personnel.

2. Plan B*

a. Class of positions.

Accounting Officer I	755	789	826	863	902	944	987	1032	1079

*The salary steps herein shall not include any amounts paid by any county welfare board under the provisions of Minnesota Statutes, Section 471.61.

Accounting Officer II	826	863	902	944	987	1032	1079	1126	1177
Accounting Officer III	944	987	1032	1079	1126	1177	1232	1290	1348
Asst. Resid. Facil. Opr.(s)	**538**	**564**	**590**	**617**	**644**	**675**	**707**	**739**	
Case Aide	660	691	723	755	789	826			
Collection Services Supvr. I	1055	1102	1150	1203	1261	1319	1377	1440	
Comm.-Service Aide	412	433	454	475	496	517	538		
Coord. of Aging	675	707	739	771	807	844	881	923	
Counselor on Alcoholism	863	902	944	987	1032	1079			
Dev. Achieve. Center Instr.	**564**	**590**	**617**	**644**	**675**	**707**			
Financial-Asst. Specialist	844	881	923	965	1008	1055	1102	1150	
Financial-Asst. Supvr. I	923	965	1008	1055	1102	1150	1203	1261	1319
Financial-Asst. Supvr. II	1055	1102	1150	1203	1261	1319	1377	1440	
Finaical Worker I	660	691	723	755	789	826			
Financial Worker II	739	771	807	844	881	923	965	1008	1055
Group Home Parents	564	590	617	644	675	707	739	771	
Home Health Aide	517	538	564	590	617	644	675		
Home Helath Aide Coord.	739	771	807	844	881	923	965		
Home Maker Coordinator I	739	771	807	844	881	923	965		
Homemaker/Home Health Aide	**517**	**538**	**564**	**590**	**617**	**644**	**675**		
Housekeeper	Hourly rate proposed by appointing authority and approved by the Merit System Supervisor and the Commissioner of Public Welfare, and not less than $2.10/hour.								
Home Maker I	517	538	564	590	617	644	675		
Home Maker II	564	590	617	644	675	707	739	771	
Licensed Practical Nurse	675	707	739	771	807				
Resources Examiner I	826	863	902	944	987	1032	1079	1126	1177
Resources Examiner II	1055	1102	1150	1203	1261	1319	1377		
Resources Examiner III	1150	1203	1261	1319	1377	1440	1503		
Senior Case Aide	739	771	807	844	881	923	965	1008	1055
Senior Citizen's Aide	**412**	**433**	**454**	**475**	**496**	**517**	**538**		
Transportation Coordinator	**691**	**723**	**755**	**789**	**826**	**863**	**902**	**944**	

B. Support personnel.

3. Plan C*

a. Class of positions.

	1	2	3	4	5	6	7	8	9
Accounting Officer I	755	789	826	863	902	944	987	1032	1079
Accounting Officer II	826	863	902	944	987	1032	1079	1126	1177
Accounting Officer III	944	987	1032	1079	1126	1177	1232	1290	1348
Asst. Resid. Facil. Opr.(s)	**564**	**590**	**617**	**644**	**675**	**707**	**739**	**771**	
Case Aide	691	723	755	789	826	863			
Collections Services Supvr. I	1102	1150	1203	1261	1319	1377	1440	1503	
Comm.-Services Aide	433	454	475	496	517	538	564		
Coord. of Aging	707	739	771	807	844	881	923	965	
Counselor on Alcoholism	902	944	987	1032	1079	1126			
Dev. Achieve. Center Instr.	**590**	**617**	**644**	**675**	**707**	**739**			
Financial-Asst. Specialist	881	923	965	1008	1055	1102	1150	1203	
Financial-Asst. Supvr. I	965	1008	1055	1102	1150	1203	1261	1319	1377
Financial-Asst. Supvr. II	1102	1150	1203	1261	1319	1377	1440	1503	
Financial Worker I	691	723	755	789	826	863			
Financial Worker II	771	807	844	881	923	965	1008	1055	1102
Group Home Parents	590	617	644	675	707	739	771	807	
Home Health Aide	538	564	590	617	644	675	707		
Home Health Aide Coord.	771	807	844	881	923	965	1008		
Home Maker Coordinator I	771	807	844	881	923	965	1008		
Homemaker/Home Health Aide	**538**	**564**	**590**	**617**	**644**	**675**	**707**		
Housekeeper	Hourly rate proposed by appointing authority and approved by the Merit System Supervisor and the Commissioner of Public Welfare, and not less than $2.10/hour.								
Home Maker I	538	564	590	617	644	675	707		
Home Maker II	590	617	644	675	707	739	771	807	
Licensed Practical Nurse	707	739	771	807	844				
Resources Examiner I	863	902	944	987	1032	1079	1126	1177	1232
Resources Examiner II	1102	1150	1203	1261	1319	1377	1440		
Resources Examiner III	1203	1261	1319	1377	1440	1503	1572		

*The salary steps herein shall not include any amounts paid by any county welfare board under the provisions of Minnesota Statutes, Section 471.61.

KEY: Existing rules are printed in standard type face. Proposed additions to existing rules are printed in **boldface**, while proposed deletions from existing rules are printed within [single brackets]. Additions to proposed rules are **underlined and boldfaced**, while deletions from proposed rules are printed within [[double brackets]].

Senior Case Aide	771	807	844	881	923	965	1008	1055	1102
Senior Citizen's Aide	**433**	**454**	**475**	**496**	**517**	**538**	**564**		
Transportation Coordinator	**723**	**755**	**789**	**826**	**863**	**902**	**944**	**987**	

C. Clerical.

1. Plan A*

a. Class of positions.	1	2	3	4	5	6	7	8	9
Bkkp.-Mach. Operator	454	473	494	515	536	557	578	601	627
Clerical Supervisor	601	627	654	681	710	741	773	805	839
Clerk I	389	406	422	438	454	473	494	515	536
Clerk II	454	473	494	515	536	557	578	601	627
Clerk III	536	557	578	601	627	654	681	710	741
Clerk-Typist I (1)	406	422	438	545	473	494	515	536	557
Clerk-Typist II	454	473	494	515	536	557	578	601	627
Clerk-Typist III	536	557	578	601	627	654	681	710	741
Clerk-Specialist	627	654	681	710	741	773	805	839	876
Clerk-Steno I	422	438	454	473	494	515	536	557	578
Clerk-Steno II	494	515	536	557	578	601	627	654	681
Clerk-Steno III	536	557	578	601	627	654	681	710	741
Information Systems Spec.	**578**	**601**	**627**	**654**	**681**	**710**	**741**	**773**	
Key-Punch Operator	438	454	473	494	515	536	557	578	601
Swbd. Operator I	422	438	454	473	494	515	536	557	578
Swbd. Operator II	454	473	494	515	536	557	578	601	627

(1) Employees in this class assigned on a full-time basis to transcribing machine operation may be paid within the county range for Clerk-Stenographer I.

C. Clerical.

2. Plan B*

a. Class of positions.	1	2	3	4	5	6	7	8	9
Bkkp.-Mach. Operator	473	494	515	536	557	578	601	627	654
Clerical Supervisor	627	654	681	710	741	773	805	839	876
Clerk I	406	422	438	454	473	494	515	536	557
Clerk II	473	494	515	536	557	578	601	627	654
Clerk III	557	578	601	627	654	681	710	741	773
Clerk-Typist I (1)	422	438	454	473	494	515	536	557	578
Clerk-Typist II	473	494	515	536	557	578	601	627	654
Clerk-Typist III	557	578	601	627	654	681	710	741	773
Clerk Specialist	654	681	710	741	773	805	839	876	913
Clerk-Steno I	438	454	473	494	515	536	557	578	601
Clerk-Steno II	515	536	557	578	601	627	654	681	710
Clerk-Steno III	557	578	601	627	654	681	710	741	773
Information Systems Spec.	**601**	**627**	**654**	**681**	**710**	**741**	**773**	**805**	
Key-Punch Operator	454	473	494	515	536	557	578	601	627
Swbd. Operator I	438	454	473	494	515	536	557	578	601
Swbd. Operator II	473	494	515	536	557	578	601	627	654

(1) Employees in this class assigned on a full-time basis to transcribing machine operation may be paid within the county range for Clerk-Stenographer I.

C. Clerical.

3. Plan C*

a. Class of positions.	1	2	3	4	5	6	7	8	9
Bkkp.-Mach. Operator	494	515	536	557	578	601	627	654	681
Clerical Supervisor	654	681	710	741	773	805	839	876	913
Clerk I	422	438	454	473	494	515	536	557	578
Clerk II	494	515	536	557	578	601	627	654	681
Clerk III	578	601	627	654	681	710	741	773	805
Clerk-Typist I (1)	438	454	473	494	515	536	557	578	601
Clerk-Typist II	494	515	536	557	578	601	627	654	681
Clerk-Typist III	578	601	627	654	681	710	741	773	805
Clerk-Specialist	681	710	741	773	805	839	876	913	952
Clerk-Steno I	454	473	494	515	536	557	578	601	627
Clerk-Steno II	536	557	578	601	627	654	681	710	741
Clerk-Steno III	578	601	627	654	681	710	741	773	805
Information Systems Spec.	**627**	**654**	**681**	**710**	**741**	**773**	**805**	**839**	
Key-Punch Operator	473	494	515	536	557	578	601	627	654
Swbd. Operator I	454	473	494	515	536	557	578	601	627
Swbd. Operator II	494	515	536	557	578	601	627	654	681

(1) Employees in this class assigned on a full-time basis to transcribing machine operation may be paid within the county range for Clerk-Stenographer I.

*The salary steps herein shall not include any amounts paid by any county welfare board under the provisions of Minnesota Statutes, Section 471.61.

C. Clerical.

4. Plan D*

a. Class of positions.	1	2	3	4	5	6	7	8	9
Bkkp.-Mach. Operator	515	536	557	578	601	627	654	681	710
Clerical Supervisor	681	710	741	773	805	839	876	913	952
Clerk I	438	454	473	494	515	536	557	578	601
Clerk II	515	536	557	578	601	627	654	681	710
Clerk III	601	627	654	681	710	741	773	805	839
Clerk-Typist I (1)	454	473	494	515	536	557	578	601	627
Clerk-Typist II	515	536	557	578	601	627	654	681	710
Clerk-Typist III	601	627	654	681	710	741	773	805	839
Clerk-Specialist	710	741	773	805	839	876	913	952	994
Clerk-Steno I	473	494	515	536	557	578	601	627	654
Clerk-Steno II	557	578	601	627	654	681	710	741	773
Clerk-Steno III	601	627	654	681	710	741	773	805	839
Information Systems Spec.	**654**	**681**	**710**	**741**	**773**	**805**	**839**	**876**	
Key-Punch Operator	494	515	536	557	578	601	627	654	681
Swbd. Operator I	473	494	515	536	557	578	601	627	654
Swbd. Operator II	515	536	557	578	601	627	654	681	710

(1) Employees in this class assigned on a full-time basis to transcribing machine operation may be paid within the county range for Clerk-Stenographer I.

C. Clerical.

5. Plan E*.

a. Class of positions	1	2	3	4	5	6	7	8
Bkkp.-Mach. Operator	557	578	601	627	654	681	710	741
Clerical Supervisor	741	773	805	839	876	913	952	994
Clerk I	473	494	515	536	557	578	601	627
Clerk II	557	578	601	627	654	681	710	741
Clerk III	654	681	710	741	773	805	839	876
Clerk-Typist I (1)	494	515	536	557	578	601	627	654
Clerk-Typist II	557	578	601	627	654	681	710	741
Clerk-Typist III	654	681	710	741	773	805	839	876
Clerk-Specialist	773	805	839	876	913	952	994	1037
Clerk-Steno I	515	536	557	578	601	627	654	681
Clerk-Steno II	601	627	654	681	710	741	773	805
Clerk-Steno III	654	681	710	741	773	805	839	876
Information Systems Spec.	**710**	**741**	**773**	**805**	**839**	**876**	**913**	**952**
Key-Punch Operator	536	557	578	601	627	654	681	710
Swbd. Operator I	515	536	557	578	601	627	654	681
Swbd. Operator II	557	578	601	627	654	681	710	741

(1) Employees in this class assigned on a full-time basis to transcribing machine operation may be paid within the county range for Clerk-Stenographer I.

C. Clerical.

6. Plan F*.

a. Class of positions.	1	2	3	4	5	6	7	8
Bkkp.-Mach. Operator	578	601	627	654	681	710	741	773
Clerical Supervisor	773	805	839	876	913	952	944	1037
Clerk I	515	536	557	578	601	627	654	681
Clerk II	578	601	627	654	681	710	741	773
Clerk III	681	710	741	773	805	839	876	913
Clerk-Typist I (1)	536	557	578	601	627	654	681	710
Clerk-Typist II	578	601	627	654	681	710	741	773
Clerk-Typist III	681	710	741	773	805	839	876	913
Clerk Specialist	805	839	876	913	952	994	1037	1082
Clerk-Steno I	557	578	601	627	654	681	710	741
Clerk-Steno II	627	654	681	710	741	773	805	839
Clerk-Steno III	681	710	741	773	805	839	876	913
Information Systems Spec.	**741**	**773**	**805**	**839**	**876**	**913**	**952**	**994**
Key-Punch Operator	578	601	627	654	681	710	741	773
Swbd. Operator I	536	557	578	601	627	654	681	710
Swbd. Operator II	578	601	627	654	681	710	741	773

(1) Employees in this class assigned on a full-time basis to transcribing machine operation may be paid within the county range for Clerk-Stenographer I.

*The salary steps herein shall not include any amounts paid by any county welfare board under the provisions of Minnesota Statutes, Section 471.61.

KEY: Existing rules are printed in standard type face. Proposed additions to existing rules are printed in **boldface**, while proposed deletions from existing rules are printed within [single brackets]. Additions to proposed rules are **underlined and boldfaced**, while deletions from proposed rules are printed within [[double brackets]].

D. Maintenance & trades.

1. Plan A*.

A. Class of positions.

	1	2	3	4	5	6	7
Auto Driver	515	536	557	578	601	627	654
Bus Driver	**557**	**578**	**601**	**627**	**654**	**681**	**710**
Janitor (1)	557	578	601	627	654	681	710
Laborer	$3.20/hour						
Maintenance Worker	578	601	627	654	681	710	741

(1) Employees who are required to work for a period of at least five hours after 6 p.m. on a regular scheduled basis may be paid a shift differential in the amount of one salary step above their normal day-work rate.

2. Plan B*

a. Class of positions.

	1	2	3	4	5	6	7
Auto Driver	654	681	710	741	773	805	839
Bus Driver	**681**	**710**	**741**	**773**	**805**	**839**	**876**
Janitor (1)	654	681	710	741	773	805	839
Laborer	$3.91/hour						
Maintenance Worker	710	741	773	805	839	876	913

(1) Employees who are required to work for a period of at least five hours after 6 p.m. on a regular scheduled basis may be paid a shift differential in the amount of one salary step above their normal day-work rate.

*The salary steps herein shall not include any amounts paid by any county welfare board under the provisions of Minnesota Stautes, Section 471.61.

Office of the State Treasurer

Proposed Temporary Rules Governing Minnesota Unclaimed Property Act

Chapter One: General

TRE 1 Purpose and statutory authority. The rules and regulations contained in this subchapter are for the purpose of implementing provisions of the Unclaimed Property Law and are authorized by Minn. Stat. § 345.56.

TRE 2 Service charges. The term ''service charges'' means any type of charge deducted by a holder (as defined in subdivision 5 of Minn. Stat. § 345.31) from property subject to the Uniform Disposition of Unclaimed Property Act (Minn. Stat. §§ 345.31-345.60 inclusive, Minnesota Laws of 1977, ch. 137), including, but not limited to charges imposed by virtue of the inactivity, dormancy, or abandonment of property such as service charges, handling charges, and administrative costs.

TRE 3 Property. The term ''property'' means any property that is reportable to the State Treasurer under the Uniform Disposition of Unclaimed Property Act, or would be reportable if service charges had not been deducted therefrom.

TRE 4 Inactivity. The term ''inactivity'' means nonoccurrence of any of the events or acts described in (1), (2), (3), (4) or (5) of Minn. Stat. § 345.32(a) or (1), (2), (3) or (4) of Minn. Stat. § 345.32(b).

TRE 5 Deducted. The term ''deducted'' shall also be deemed to mean ''excluding''.

Chapter Two: Service Charges Lawfully Withheld

TRE 6 Authority for service charges. Service charges shall not be deducted from property unless:

A. Expressly permitted by provisions of the Uniform Disposition of Unclaimed Property Act; and

B. Authorized by a statute other than the Uniform Disposition of Unclaimed Property Act or by a valid, enforceable contract which expressly provides for such charges and the terms of which are not inconsistent with the provisions of the Uniform Disposition of Unclaimed Property Act.

TRE 7 Contracted service charges. For purposes of Minn. Stat. §§ 345.32(a), (b), and (c), 345.39, and rule TRE 6 B. hereof, an agreement in order to constitute a ''contracted service charge'', ''charges that may lawfully be withheld'', or ''valid enforceable contract'' must satisfy the following conditions:

A. The agreement must be in writing and executed by the customer.

B. The agreement shall expressly provide on the face thereof the specific amount or method by which such service charges shall be calculated and in no event shall the terms thereof be unreasonable or unconscionable.

C. Any modification or supplement, or amendment to an agreement otherwise satisfying these regulations must be assented to in writing by the customer.

D. Such agreement shall otherwise comply with all Minnesota Statutes and Federal Statutes and regulations to which holders are subject.

TRE 8 Substantiation of deductions. If service charges are deducted from property, a holder shall include or attach as part of the report filed pursuant to Minn. Stat. § 345.41:

A. The citation of the statute or a copy of the form of contract authorizing such service charges.

B. The value or amount of each item of property, before any service charges are deducted therefrom.

C. The amount of service charges deducted from each item and the date or dates on which such service charges were deducted.

D. Such other information or documentation as the State Treasurer may require after review of the report to substantiate the deduction of service charges.

TRE 9 Waiver or non-enforcement of right. Service charges may not be deducted from property pursuant to a contract or statute if the holder would not have deducted such charges in the event the property has been claimed by the owner prior to being reported or remitted to the State Treasurer.

Chapter Three: Interest or Dividends

TRE 10 Authority for discontinuance. If payment of interest or dividends on property subject to Minn. Stat. §§ 345.32 (a) and (b) is discontinued at any time during the period of inactivity, the holder shall include or attach as part of the report filed pursuant to Minn. Stat. § 345.41:

A. A copy of the form of a valid, enforceable contract which authorized such discontinuance of payment of interest or dividends; or

B. The citation of the statute which authorized such discontinuance of payment of interest or dividends.

TRE 11 Non-Enforcement of right. A contract or statute shall not be considered as authorizing discontinuance of payment of interest or dividends if such payment would not have been discontinued, or would otherwise have accrued to the benefit of the owner, in the event the property had been claimed by the owner prior to being reported or remitted to the State Treasurer.

Chapter Four: Miscellaneous

TRE 12 Escheat period. The provisions of Minn. Stat. §§ 345.32(a) (4) and (5) and (b) (4) are effective as of July 1, 1977. Unless such sections are satisfied subsequent to said date the property shall be reportable to the State Treasurer.

TRE 13 Receipt of statement. For purposes of Minn. Stat. §§ 345.32(a) (4) and (b) (4), a tax report or regular statement of deposit shall be deemed to be "the statement" referred to in said sections.

TRE 14 Negative property report. A holder who has no property which is reportable pursuant to the Uniform Disposition of Unclaimed Property Act shall report that fact if so requested in writing by the State Treasurer.

OFFICIAL NOTICES

State Arts Board

Notice of Public Hearing on Grants Program for Art Organizations

MSAB will conduct a public hearing on Friday, September 23, 1977 from 2-5:00 PM in Room 83, State Office Building, St. Paul.

The Minnesota State Arts Board is seeking public comment on its subsidy grant distribution program, which was recently completed for 1977-78.

The purpose of this hearing is to review the 1977-78 process and to provide the Board with guidance in developing its distribution process for subsidy grants to major arts organizations next fiscal year 1978-79.

The Board uses a citizen advisory panel to make recommendations on the distribution of subsidy grants. The hearing will be conducted by this advisory panel, which is chaired by Dr. Emily Hannah.

Any member of the public and representatives of interested arts organizations may speak at the hearing. The advisory panel is interested in all views on the following topics:

1. Eligibility criteria for subsidy and requirements for applicants to demonstrate their eligibility.

2. Criteria and methods for allocating subsidy grants to organizations determined to be eligible, as well as requirements for applicants to demonstrate their qualifications.

3. Comments will also be invited on the opinions of the public on the issue of project grants versus general program support grants, such as subsidy grants.

The advisory panel will take into account comments and recommendations made by the public as well as other available information and observations. Panel recommendations for guidelines for the 1978-79 grant distribution will then be submitted to a sub-committee of the Board and to the full Board for final consideration.

Advance registration to speak at the hearing is required, although time remaining unscheduled at the end of the hearing will be available to those who have not signed up to speak. Presentations are limited to ten minutes per person and *must* be limited to the topics of the hearing. Persons may indicate their desire to speak by calling the State Arts Board office at (612) 874-1335 until 4:30 PM on Thursday, September 22. Requests received after that time will not be accepted and those persons may be recognized at the hearing only if time remains after scheduled speakers have been heard.

In addition to the public hearing, the advisory panel is soliciting written comments and suggestions. These should be addressed to the Subsidy Advisory Panel, c/o Minnesota State Arts Board, 314 Clifton Avenue, Minneapolis, MN 55403. Written comments may address the subjects proposed for the hearing, as well as any others the writers feel are important to the subsidy process.

Subsidy grants to major arts organizations were authorized by the Legislature for the current biennium at $1.6 million, divided into annual amounts of $700,000 and $900,000. The full biennial budget of the Minnesota State Arts Board, including state and Federal funds is approximately $4.8 million. Subsidy is only one of several grant categories, including project grants to arts organizations, grants to sponsors of arts programs and grants to individual artists. In addition, the Board's budget provides for professional staff services in consultation and technical assistance which are available statewide, through its program of regional development, as well as grant application processing.

Mary Salerud
Public Information Coordinator

Pollution Control Agency

Notice of Hearing on Bemidji's Municipal Wastewater Treatment Facility

It is hereby ordered and notice is hereby given that a public hearing concerning the above-entitled matter will be held by the Minnesota Pollution Control Agency (MPCA) pursuant to Minn. Stat. § 115.03 subd. 1(h) and Minnesota Rule WPC 36(k) on October 27, 1977, at the Ballroom, Bemidji State University, Bemidji, Minnesota, commencing at 9:30 a.m., and on October 28, 1977, at the Cass Lake American Legion, Cass Lake, Minnesota, commencing at 9:30 a.m. An evening session will also be held at 7 p.m. on October 27, 1977, at the Ballroom, Bemidji State University, Bemidji, Minnesota, for the purpose of providing an opportunity to speak to those who cannot attend during the day. The purpose of the hearing will be to consider interim improvements, including interim phosphorus removal, to be included in the proposed permits for the Bemidji Wastewater Treatment Facility. The purpose of the proposed interim phosphorus limitation is to improve the water quality of the lakes affected by the discharge. The MPCA does not intend to influence the choice of the ultimate wastewater treatment facility, currently the subject of an environmental impact statement process, by imposing interim phosphorus limitations.

Notice is hereby given that the above-named applicant, City of Bemidji, City Hall, Bemidji, Minnesota 56601, has applied for a state disposal system permit and a NPDES permit.

The applicant operates a treatment facility for wastewater from normal domestic and municipal sources. Discharge 001 consists of treated wastewater flowing continuously from a trickling filter type facility which is designed to treat up to 1,300,000 gallons per day. The discharge is to the Mississippi River at a point approximately 700 feet downstream from Lake Bemidji. Grit Chamber Bypass (Discharge 002) is designed to discharge untreated wastewater to the Mississippi River at a point approximately 500 feet upstream of Lake Bemidji, but no discharge has been recorded. Treatment Facility overflow (Discharge 003) occasionally discharges treated wastewater to the Mississippi River at a point approximately 600 feet upstream of Lake Bemidji, when the effluent pumping station becomes overloaded.

In accordance with Federal and State law, the Minnesota Pollution Control Agency proposes to issue the NPDES permit and a State Disposal System permit for this facility. The permits will be issued for a term of approximately 5 years.

The determination to issue the permits is tentative. Interested persons are invited to submit written comments to the MPCA in regard to application and/or the determination to issue the permits. Comments should be submitted in person or by mail by October 26, 1977. These comments should be delivered or mailed to:

Ms. Terry Mader
Minnesota Pollution Control Agency
1936 West County Road B2
Roseville, Minnesota 55113

The number PCA-78-005-HK should appear next to the above address on the envelope and on each page of any submitted comments. Any written comments received will be offered to the Hearing Examiner as part of the hearing record.

The application, proposed permits, fact sheet, comments received and other documents may be inspected and copied, at the address noted above, any time between 9:30 a.m. and 3:30 p.m., Monday through Friday. A copy of the fact sheet or draft permits will be mailed to any interested person upon written request. Further information regarding the application or proposed permits may be obtained by contacting:

Don Abrams
Minnesota Pollution Control Agency
1935 West County Road B2
Roseville, Minnesota 55113
Telephone: ((612) 296-7229)

A Regional Office of the Minnesota Pollution Control Agency is located at 403 South Union Avenue, Fergus Falls, Minnesota 56537 (218-736-2235), where information may also be obtained concerning the application and proposed permits.

The hearing of this matter will be held before Howard Kaibel, 1745 University Avenue, St. Paul, Minnesota 55104 ((612) 296-8107), a Hearing Examiner appointed by the Chief Hearing Examiner of the State of Minnesota. The hearing will be conducted pursuant to the contested case procedures set out in Minn. Stat. § 15.0411 through 15.052, Minnesota Regulation HE 201 through 222 and the MPCA Rules of Procedure 1 through 13, to the extent the latter rules do not conflict with HE 201-222. These procedural rules are available at the Office of Hearing Examiners and the Minnesota Pollution Control Agency, or may be purchased from the Documents Section of the Department of Administration, 140 Centennial Building, St. Paul, Minnesota 55155 ((612) 296-2874). They provide generally for the procedural rights of parties, including: the right to advance notice of witnesses and evidence, the right to a prehearing conference, the right to present evidence and to cross-examine witnesses, and the right to purchase a record or transcript. Parties may be entitled, pursuant to Minn. Stat. § 15.052, subd. 4, to issuance of subpoenas requiring the attendance and testimony of witnesses and the production of documents relevant to any matter involved in the hearing.

All parties have the right to be represented by legal counsel or any other representative of their choice throughout the proceeding. Any person who desires to become a party to this matter must submit a timely **petition to intervene** to the Hearing Examiner pursuant to Minnesota Rule HE 210, showing how the person's legal rights, duties and privileges may be determined or affected by the decision in this case. The petition must also set forth the grounds and purposes for which intervention is sought.

All parties are advised that, if a party intends to appear at the hearing, the Notice of Appearance form enclosed with this Order must be completed and returned to the Hearing Examiner at least ten (10) days before the hearing date.

Interested persons may speak at the hearing without becoming parties and without submitting a Notice of Appearance. However, such persons may not cross-examine witnesses or exercise other rights of parties.

If persons have good reason for requesting a delay of the hearing, the request must be made in writing to the Hearing Examiner at least five (5) days prior to the hearing. A copy of the request must be served on the Agency and any other parties.

Questions concerning the issues raised in this Order or concerning informal disposition or discovery may be directed to Marlene Senechal, Attorney General's staff, Minnesota Pollution Control Agency, 1935 West County Road B2, Roseville, Minnesota 55113 ((612) 296-7708).

Sandra S. Gardebring
Executive Director

STATE OF MINNESOTA
OFFICE OF THE STATE REGISTER
95 Sherburne, Suite 203
St. Paul, Minnesota 55103

SUBSCRIPTION ORDER FORM

$110.00—annual subscription to the *State Register*—53 issues (non-refundable)

SAVE MONEY ON ADDITIONAL SUBSCRIPTIONS:

$85.00—second subscription and additional subscriptions (each)

I would like _____ subscriptions at a total cost of $_____. I have enclosed that amount in a check or money order made out to: "Minnesota State Treasurer."

Name of Company or Organization _____

Attention to: _____

Street _____

City _____ State _____ Zip _____

Telephone _____

NOW AVAILABLE:
STATE REGISTER BINDERS

3½ Inch Durable Plastic Self-locking Binders

STATE OF MINNESOTA
OFFICE OF THE STATE REGISTER
95 Sherburne, Suite 203
St. Paul, Minnesota 55103

BINDER ORDER FORM

State Register Binder $5.00 + $.20 sales tax, for a total of $5.20, or include your tax exempt no._____

I would like _____ binder(s), at a total cost of $_____. I have enclosed that amount in a check or money order made out to: "Minnesota State Treasurer."

Name of Company or Organization _____

Attention to: _____

Street _____

City _____ State _____ Zip _____

Telephone _____

STATE OF MINNESOTA
OFFICE OF HEARING EXAMINERS

FOR THE POLLUTION CONTROL AGENCY

RECEIVED
AUG 04 1978
MPCA
ATTORNEY GENERAL

IN THE MATTER OF THE PROPOSED ADOPTION OF RULES GOVERNING THE IDENTIFICATION, LABELLING, CLASSIFICATION, STORAGE, COLLECTION, TRANSPORTATION AND DISPOSAL OF HAZARDOUS WASTES AND OF AMENDMENTS TO MINNESOTA REGULATIONS SW 1, 2, 3, 4, 6 AND 7.

REPORT AND MEMORANDUM OF THE CHIEF HEARING EXAMINER

The above-entitled matter was submitted to the Chief Hearing Examiner for review pursuant to the provisions of Minn. Stat. § 15.052, Subd. 4, and Minn. Rule HE 107, on Wednesday, July 26, 1978. This review is limited to ensuring compliance with Minn. Stat. § 15.0412, Subd. 4, and to determine whether or not the rules as finally adopted are substantially different from those proposed prior to hearing.

Based upon a review of the record, the Chief Hearing Examiner makes the following:

FINDINGS OF FACT

1. A Notice of Hearing was published in the State Register and mailed to all persons who had registered with the Secretary of State at least 30 days prior to the first day of hearing.

2. The full text of the proposed rule and amendments to existing rules were published at least 30 days prior to the first day of hearing.

3. All documents required to be filed prior to the hearing pursuant to Minn. Rule HE 103 were filed more than 25 days prior to the hearing.

4. The Pollution Control Agency (hereinafter "PCA") amended the proposed rules during the hearing process and all interested persons in attendance had an opportunity to comment on the amendments during the hearing and following the hearing for 20 calendar days, the final version of the amended rules being filed with the Hearing Examiner on March 9, 1978. The

Hearing Examiner wrote his report solely on the basis of the March 9 rules as amended submission.

5. The Hearing Examiner issued his report on May 25, 1978, and the PCA adopted the rules on July 25, 1978, adopting in part the Hearing Examiner's report as its Order and issued its own Findings of Fact on July 25, 1978.

6. Neither the PCA's Order Adopting Rules nor their Findings of Fact and Conclusions indicate that any of the rules were further amended or changed in any way from those submitted on March 9, 1978, with one exception being HW-2.H.2.

7. There have been at least 13 separate changes made in the rules between the issuance of the Hearing Examiner's report and the date of adoption of the rules by the PCA not mentioned in their Findings. The changes and the results are as follows:

S.C. X HW-1.G. The language has been changed to speak solely to preemption by federal law. The original language (added during the hearing process) was much broader in that it related to any act required or prohibited by the United States Code or any duly adopted and valid regulation thereunder. The change has the effect of narrowing considerably an exception which was discussed extensively at public hearing. The Chief Hearing Examiner agrees with the PCA, as did the Hearing Examiner (see Hearing Examiner report Finding 35), that the new language is a correct statement of the law; nevertheless, it changes the rule without providing an opportunity for public discussion.

X HW-2.C.12. In this rule, the word "may" has been changed to "shall" which has the effect of removing some agency discretion. Such a change would probably have been required by the Attorney General upon review. The change affects only the agency and would probably have been supported by all persons at the hearing.

X HW-4.C.1.d. Language has been added to this rule which has the effect of clarifying the rule by stating the criteria which the agency uses in determining when to approve a site monitoring system. The addition does not alter the meaning of the rule or affect any persons as the rule as a whole (HW-4) consis-

tently speaks of the effects of such facilities on the soil, groundwater and air.

S.C. X HW-4.C.3.f.(2) In this rule, the agency has deleted a provision which had been put in the rules at public hearing and which remained in the rules as submitted to the Hearing Examiner on March 9, 1978. The provison would have exempted used crankcase oil storage tanks of less than 5,000 gallons (18,927 liters) from the requirement of equipping the tanks with a vapor recovery system. This exemption was discussed at hearing during the testimony of James Kinsey on February 3, 1978, (see Transcript at page 2973) and the exact language was proposed and put into the record that day by Kinsey (see Transcript at page 2981). The exemption was aimed at those persons participating in the oil recycling program.

X HW-5.B.12. In its final submission to the Hearing Examiner, agency staff amended this rule by deleting the words "transported or". The rule as adopted puts the words back into the rule. As this rule pertains to the loading of hazardous wastes, as adopted, it fails to recognize the problem that is pointed out in the staff submission received March 9, 1978. Also, the change was also included in the final rule submission alluded to in Finding 4 above.

X HW-5.E.5. In this rule, the words "in the event the transporter does not" have now been added to the rule for the first time. This particular rule places responsibility for cleaning spills on the transporter and the generator. The added language may appear to be for purposes of clarification but may have a substantial effect on the liability of the transporter to the generator. As there is no finding by the PCA nor any record to rely on, it cannot be stated with certainty what effect this could cause. This could only be determined at the present time by those involved in generating or transporting hazardous wastes, and at a public hearing.

X HW-6.E.2.c. Language has been added to this rule for obvious clarity and uniformity much as was found in HW-4.C.1.d. and would have the same effect.

HW-6.H. In this rule, as in HW-2.C.12., a "may" has become "shall" and would have the same effect.

HW-8.C.3.d. The change in this rule gives the Director of the PCA authority to designate a "waste code number" which number could then replace the requirement that the shipping papers include "The approximate chemical composition of the waste." Again, the Chief Hearing Examiner is unable to find anything in the record even mentioning a "waste code number". In reading the rules as a whole, it is evident that in the case of a "spill", people must know immediately the composition of the chemical in order to clean it up. As there is no provision relating to how or where these "waste codes" will be published or kept or how one would get access to them in an emergency situation, the ramifications of such a rule should be obvious. As the provision was not discussed or previously proposed, groups such as environmentalists have not had an opportunity to react.

HW-8.E.6. This rule is entirely new and was not proposed in any submissions prior to the time the final rules were adopted by the PCA Board. HW-9.C.2. assumes, by its language, that a county ordinance will provide for shipping papers. However, nowhere is there a rule which requires it. This rule again assumes that the ordinance will contain those provisions. The Chief Hearing Examiner has been unable to find any discussion either in the hearing record or in written submissions relating to this particular rule.

Tied up w/ agency failure to est stds. for approval of cty ord.

HW-9.A. This "Applicability" rule has been changed to give specific authority to the PCA Board for reviewing, denying, suspending and reversing county action. It has such implied authority in following rules. While it adds nothing new, it was never discussed prior to final adoption.

HW-9.D.1. In this rule, language has been stricken and new words inserted. The language originally published was never amended during the hearing process and would seemingly

require counties to report "all actions" relating to hazardous waste licenses and permits to the PCA. This could include all routine inspections and other investigations. As presently before the Chief Hearing Examiner, the rule relates solely to reports relating to the approval or review of licenses or permits. As this change was never raised before, there has been no testimony in the record by any potential interest groups who may favor a more complete reporting by the counties.

HW-9.D.3. The changes made in this rule are clarifying amendments and do make the rule consistent with the rest of the rules.

8. The original Notice of Hearing and rules were first published at 2 State Register 521. Subsequently the PCA published three notices of continuation of the hearing at 2 State Register 986, 2 State Register 1272 and 2 State Register 1412. At no time were the amendments which were presented by the PCA at the February 3 hearing published.

9. Amendments proposed to HW-2.B.2. did two things. First, "Arsenic and its compounds", and "Chromium and its compounds" were added to the list of components which, if contained in a waste, would cause the waste to be labeled as a hazardous waste; thus, requiring the generator to comply with these rules. Second, the allowable concentration limits for Aldrin, Chlordane, DDT, PCB and Toxaphene were lowered. In the first instance, persons discharging waste containing any of the two added compounds would have had no reason to attend the hearings for the original rules as published did not contain them. The same can be said for persons whose wastes contained concentrations of the chemicals within the published limits but now exceeding the amended limits.

10. There were originally very stringent requirements in HW-2.D. relating to evaluation of wastes. Amendments to HW-2.D.2. and 4. have lessened these requirements considerably without any showing, on the record, other than 15 lines of transcribed

testimony of Mr. Kinsey (see, Transcript at page 2928), of the need or reasonableness of the lesser requirements. Again, groups which supported the more stringent requirements would have no notice of the proposed change unless they had sat through all 28 days of hearing. In reviewing the transcripts, the only persons appearing on the record at the February 3 hearing other than PCA personnel, the Hearing Examiner and the court reporter were representatives of industry.

11. The amendments proposed at the February 3 hearing to rule HW-3. primarily reflect the amendments discussed in Finding 10 above as they relate to the lessening of the evaluation requirements. Again, groups supporting the more stringent requirements would have had no notice.

12. The only presentation by the PCA supporting the amendments proposed at the February 3 hearing is contained in Exhibit 43, which was read into the record by Mr. Kinsey. This statement contains little, if any, facts showing either the need for or the reasonableness of the proposed amendments. Rather, it is merely a statement which tells what the amendments do and what will result from their adoption.

Based upon the foregoing Findings of Fact, the Chief Hearing Examiner makes the following:

CONCLUSIONS

1. The Pollution Control Agency has failed to comply with the provisions of Minn. Stat. § 15.0412, subd. 4, in that it did not, at the hearing, make an affirmative presentation of facts establishing the need for and reasonableness of the amendments proposed on February 3, 1978, nor of the amendments discussed in Finding 7 above.

2. Of the amendments added by the PCA after the record closed and as discussed in Finding 7 above, the amendments to rules HW-1.G., HW-4.C.3.f.(2)., HW-5.E.5., HW-8.C.3.d., HW-8.E.6., and HW-9.D.1. are substantially different from the rules which were proposed at the public hearing in that they affect classes of persons who had no opportunity to comment on the amendments as

they were never raised at any hearing, they make major substantive changes without allowing an opportunity for reaction at any hearing and in certain instances, result in a rule fundamentally different from those contained in the Notice of Hearing.

3. The amendments to rule HW-2.B.2. discussed in Finding 9 above, result in a rule substantially different from the rule as originally proposed in that it affects classes of persons not represented at the previous hearing.

4. The amendment proposed to rules HW-2.D.2. and 4., and HW-3., as discussed in Findings 10 and 11 above, result in rules which are substantially different from the rule as originally proposed in that they affect classes of persons not represented at the hearing, make major substantive changes that were not raised by the original Notice of Hearing in such a way as to invite reaction at the hearing and result in rules fundamentally different from that contained in the Notice of Hearing.

NOW, THEREFORE, pursuant to the provisions of Minn. Stat. § 15.052, subd. 4, and Minn. Rule HE 108, the Pollution Control Agency shall either withdraw the proposed final rules discussed in the Conclusions above or reconvene the rule hearing.

Dated: August 3, 1978.

Duane R. Harves

DUANE R. HARVES
Chief Hearing Examiner

M E M O R A N D U M

Rules adopted by state agencies must be based upon the record of a public hearing at which the agency must make an affirmative presentation of facts establishing the need for and reasonableness of the rule proposed for adoption. Prior to the public hearing, the agency must give notice of its intended action. The agency must afford all affected interests an opportunity to participate. (See, Minn. Stat. § 15.0412, subd. 4.)

The record of the hearing must support the rules as adopted [see, Minn. Rule Atty Gen 303(c)]. Findings of Fact must contain that which the agency finds to be fact which supports the reasons or need for the rules adopted [see, Minn. Rule Atty Gen 302(h)].

The record in this case shows that there was strong opposition to the originally proposed rules. During the hearing process, the PCA and participating industry came to an agreement whereby industry would withdraw its opposition if the PCA made certain amendments. The PCA proposed these amendments at hearing on February 3, 1978, through a prepared statement read into the record by Mr. Kinsey. The statement, for the most part, merely explains the changes, but gives no facts to support the need or reasonableness of the changes.

The rulemaking process in Minnesota has been established to provide for the exact "give and take" which occurred in this hearing. However, merely reaching an agreement with the public does not relieve the agency from its burden of making an affirmative presentation of facts at the hearing.

The public and the Hearing Examiner relied on the PCA's March 9, 1978, submission of the amended rules in preparing comments and the Hearing Examiner's report. Where the Hearing Examiner recommended changes to that submission, he made specific findings. The PCA spoke to those same changes in its findings. PCA Staff prepared proposed findings for the Board which were

evidently sent to those persons who actively particiated in the hearing process and to the Hearing Examiner, as the Hearing Examiner received a copy of a response to those proposed findings. Nowhere in the proposed findings is there any findings relating to the 13 changes made in the rules and which were discussed in Finding 7 above. As examples, one of the changes, the "waste control number", is an entirely new concept which could not be found anywhere in the record by the Chief Hearing Examiner. One deletion, the exemption from the requirement of having a vapor recovery system on 5,000 gallon used crankcase oil storage tanks, was part of the agreement which led industry to withdraw its objection. In other words, the PCA continued to change its rules, after the record closed, and based on no evidence or facts to support the changes, and gave no notice to anyone, in violation of the Minnesota Administrative Procedure Act and the rules of the Attorney General.

When creating the Office of Hearing Examiners in 1975, the legislature directed the Chief Hearing Examiner to adopt procedural rules which were to specifically include provisions relating to recessing and reconvening new hearings when the proposed final rule of an agency is substantially different from that which was proposed (see, Minn. Stat. § 15.052, subd. 4). That section, together with the notice and other requirements of Minn. Stat. § 15.0412, subd. 4, are clear indications of the legislature's intent that state agencies may not legislate through rulemaking unless and until they have given notice to the public of their intentions and have provided an opportunity for the public to be heard. The record shows that the PCA was fully aware of these provisions (see, Transcript Volume XXIV), but has chosen not to follow them. This was an unusual hearing in that the final rules submitted on March 9, some of which contained substantial changes, were the result of a negotiated agreement, but they were relied upon by those members of the public who participated throughout. As to them, any substantial changes to

the amended rules, such as the significant deletion mentioned above, would clearly be to their detriment.

Lastly, while it is outside the purview of the Chief Hearing Examiner's review, it should be pointed out that the term "regulation", as used throughout these rules, was stricken from the Minnesota Administrative Procedure Act in 1975, in favor of the term "rule".

D.R.H.

STATE OF MINNESOTA

COUNTY OF RAMSEY

MINNESOTA POLLUTION

CONTROL AGENCY

In the Matter of the Proposed Adoption of Rules Governing the Identification, Labelling, Classification, Storage, Collection, Transportation and Disposal of Hazardous Wastes and of Amendments to Minnesota Regulations SW 1, 2, 3, 4, 6 and 7.

NO. PCA-78-003-WS

MEMORANDUM OF MINNESOTA POLLUTION CONTROL AGENCY IN SUPPORT OF ADOPTION OF RULES

On July 25, 1978, the Minnesota Pollution Control Agency (hereinafter "Agency") adopted a comprehensive set of hazardous waste rules, HW 1-10. On July 26, 1978, pursuant to Minn. Stat. §15.052 subd. 4 (Supp. 1977) the Agency submitted the rules to the Chief Hearing Examiner for his review. On August 3, 1978, the Chief Hearing Examiner issued his Report in the above-entitled matter, declaring that the Agency "shall either withdraw the proposed final rules discussed in the Conclusions above or reconvene the rule hearing." Report of Chief Hearing Examiner at 7. This declaration was based on the Chief Hearing Examiner's determination that the Agency had failed to demonstrate the need for and reasonableness of certain language in the rules and that certain language resulted in rules substantially different from those which had originally been proposed. For the reasons set forth herein, the Agency believes that the Chief Hearing Examiner's determinations in this regard are erroneous. The Agency also believes that the Chief Hearing Examiner's determination is advisory only, and accordingly, the Agency is submitting the rules to the Attorney General for his review pursuant to Minn. Stat. §15.0412 subd. 4 (Supp. 1977).

THE CHIEF HEARING EXAMINER'S DETERMINATION

It is necessary at the outset to focus exactly on what the Chief Hearing Examiner determined. The Chief Hearing Examiner discussed in Finding 7 several changes in the rules that were made by the Agency on July 25, 1978, when the rules were adopted. He did not discuss all the changes that were made by the Agency on that date, 1/ nor did he reject all the changes he did discuss. 2/ In the Agency's view the Chief Hearing Examiner rejected amendments in the following provisions as not being supported by the record and as constituting substantial changes: HW 1.G., HW 4.C.3.f.(2), HW 5.B.12., HW 5.E.5., HW 8.C.3.d., HW 8.E.6., and HW 9.D.1.

The Chief Hearing Examiner's problems with several of these amendments can be rectified immediately and will need no further discussion. First, the Chief Hearing Examiner was incorrect when he said that the Agency deleted an exemption from vapor recovery devices for used crankcase oil storage tanks in HW 4.C.3.f.(2). This exemption was included in the rules on July 25 when adopted by the Agency. Unfortunately, the draft of the rules used by the Chief Hearing Examiner in his review had mistakenly deleted this language. The exemption is in the rules and appears in the final draft.

1/ See HW 2.H.2. and HW 4.E.2.g.

2/ Conclusion 1 by the Chief Hearing Examiner could be read to indicate that the Chief Hearing Examiner found problems with all the changes discussed in Finding 7, but the Agency does not read it that way because Finding 7 itself identifies some changes as only clarifying amendments or amendments made for consistency sake or to fulfill requirements imposed by the Attorney General. The amendments thus accepted are in HW 2.C.12., HW 4.C.1.d., HW 6.E.2.c., HW 6.H., HW 9.A., and HW 9.D.3.

Second, the Chief Hearing Examiner discovered two mistakes in the rules that were caused by an oversight in proofreading the final version of the rules typed from the automatic typewriter. Language in HW 5.B.12. and HW 5.E.5. that should have been deleted was inadvertently included in the July 25 draft. This problem was corrected by Resolution of the Agency on August 29, 1978, that eliminated this language. These two amendments will not be discussed further either.

The Chief Hearing Examiner also discussed what he called the February 3 amendments. During a recess in the course of the hearing, the Agency staff met with all interested parties in an effort to resolve objections with certain portions of the proposed rules. The result of these meetings was the introduction by the Agency staff of numerous proposed amendments to the rules. These amendments were introduced into the record on February 3, 1978, as PCA Exhibit 42 and were supported by the staff. See PCA Exhibit 43. The Chief Hearing Examiner has now determined that some of these amendments -- the listing of arsenic and chromium in List 2, HW 2.B.2., the change of concentrations in List 2, and the amendment of certain evaluation requirements in HW 2.D.2. and 4. and HW 3. -- were not supported by the record and resulted in substantial changes in the rules as proposed. The Chief Hearing Examiner did not reject any other amendments included in the February 3 package and no others will be discussed. 3/

3/ While Finding 12 and Conclusion 1 by the Chief Hearing Examiner could be read to reject all amendments introduced on February 3, the Agency does not believe the Chief Hearing Examiner meant to reject every single amendment in one fell swoop when all he specifically discussed and gave reasons for rejecting were those amendments identified in HW 2. and HW 3.

ARGUMENT

I. THE DETERMINATION OF THE CHIEF HEARING EXAMINER IS ADVISORY ONLY AND IS NOT BINDING ON THE AGENCY

Minn. Stat. §15.052 subd. 4 (Supp. 1977) provides in part that the Office of Hearing Examiners shall establish a procedure whereby "the proposed final rule of an agency shall be reviewed by the Chief Hearing Examiner to determine whether or not a new hearing is required because of substantial changes or failure of the agency to meet requirements of section 15.0412, subdivision 4." (Emphasis added.) The question then is whether this determination is binding on the Agency.

Under Minn. Stat. §15.052 subd. 3 (1976), the Hearing Examiner has the power to issue a report and to recommend a course of action to the Agency. Notwithstanding the fact that the Hearing Examiner alone has heard all of the evidence, the Hearing Examiner has power to issue only an advisory opinion as to whether the burden of proof has been sustained by the Agency. The Agency may accept, modify, or reject the recommendations of the Hearing Examiner in whole or in part. Cf. Minn. Reg. MPCA 9(q)(4)(1973)(setting forth the Agency's power in contested cases). If the Chief Hearing Examiner, following Agency action, has power to reweigh the evidence and determine which aspects of the Agency's decision are supported by or not supported by the evidence, he has a veto authority which usurps

the Agency's decisionmaking power. Under such a scheme, the Chief Hearing Examiner would be in a position to determine the content of all rules adopted by all agencies in the State of Minnesota. The Agency respectfully submits that the legislature could not have intended and did not intend that the Chief Hearing Examiner would play such a role, and that Minn. Stat. §15.052 subd. 4 (Supp. 1977) cannot be read so broadly as to give him that power.

The present case demonstrates the impropriety of such broad veto powers over the Agency's substantive decisions. Without the participation of any person or group, and without the assistance of briefs or other arguments by the participants who had spent months in the rulemaking proceedings, involving thirty days of hearings, and without any assurance that ex parte contacts did not occur, the Chief Hearing Examiner has, in effect, reversed portions of several of the Findings of Fact made by the Hearing Examiner and ratified by the Agency Board. The Chief Hearing Examiner's conclusion that the need for and reasonableness of the February 3 amendments has not been shown cannot be squared with the Hearing Examiner's Findings Nos. 9, 13, 14, 16, 27, 30, 33, 38, 39, 40, 41, 42 and 43.

Judicial review resulting in a reversal of Agency action can only be accomplished under strict procedural rules affording opportunities to file briefs and submit argument. See, e.g., Special Rule of Practice of Fourth Judicial District 4(d)(1977); Minn. R. Civ. P. 56. Similarly, the Attorney General's review under Minn. Stat. §15.0412 subd. 4 (Supp. 1977) is accompanied by strict procedural protections allowing all interested persons to be fully

heard by the Attorney General. See Minn. Reg. Atty. Gen. 305(c) (1971). The Chief Hearing Examiner's review activities afford no procedural protections whatsoever.

The Attorney General's interpretation of his own power under Minn. Stat. §15.0412 subd. 4 (Supp. 1977) to review the substantive contents of rules is far less intrusive of Agency decisionmaking authority than the powers claimed by the Chief Hearing Examiner in this case. Minn. Reg. Atty. Gen. 305(b)(2)(1971) provides:

> Regarding legality, the rule shall be disapproved if it:
>
> (aa) Exceeds the statutory authority conferred or the required conditions [of statute] have not been met.
>
> (bb) Conflicts with the governing statute or other relevant law.
>
> (cc) Has no reasonable relationship to statutory purposes.
>
> (dd) Is unconstitutional, arbitrary or unreasonable.

Significantly, the Attorney General has not interpreted his review power to include authority to reweigh the evidence to determine whether it demonstrates the need for and reasonableness of the rules; at most, the Attorney General can disapprove of the rules when he affirmatively determines that the rules are, in fact, unreasonable. The Agency respectfully submits that the Attorney General's interpretation of his own review power is proper and that the Chief Hearing Examiner's conclusion that his power of review under the statute significantly exceeds that of the Attorney General is erroneous. The Chief Hearing Examiner's sweeping exercise of his limited review powers in the present case has profoundly and impermissibly usurped the decisionmaking power of the Agency charged with responsibility for promulgating these rules.

Furthermore, the legislature knows how to make the report of the hearing examiner binding on the agency and the phrase "to determine" as is used in Minn. Stat. §15.052 subd. 4 (Supp. 1977) is not the way it is done. In Minn. Stat. §363.071 subd. 1 (1976), involving hearings by the Department of Human Rights, the legislature said "the report of the hearing examiner shall be binding on all parties to the proceedings." (Emphasis added.) In Minn. Stat. §15.0412 subd. 4 (Supp. 1977) the legislature said that if the Attorney General does not approve a rule, "the rule shall not be filed." In the Agency's view the statutory authority of the Chief Hearing Examiner to review a rule, after the hearing examiner has made only a recommendation and after the agency has made its decision and before the Attorney General conducts his review, and determine whether there is compliance with applicable procedures, is not authority to make a binding decision on the Agency.

The Agency realizes that the rules of the Office of Hearing Examiners, old HE 108 and new HE 111, could be read to require the Agency to reconvene the hearings whenever the Chief Hearing Examiner so demanded. However, the authority of the Chief Hearing Examiner can be no broader than that given to him in the statutes. See State, by Spannaus, v. Lloyd A. Fry Roofing Co., 246 N.W.2d 696 (Minn. 1976). The statutes do not justify such a reading of the rules.

It should be pointed out that a conclusion that the Chief Hearing Examiner's determination is only advisory and not binding would not allow the Agency to ignore the Chief Hearing Examiner. The Attorney General must still conduct his review and if the Attorney General agrees with the Chief Hearing Examiner that substantial

changes have been made or that the Agency has not complied with the applicable procedures, the Attorney General will not file the rule and it will not become effective. On the other hand, if the Chief Hearing Examiner's determination were binding, the Attorney General would be usurped of his review because the Agency could not send the rule to the Attorney General until the Agency had complied with the Chief Hearing Examiner's directive.

The Agency has acted properly in considering the Chief Hearing Examiner's determination only advisory. The Attorney General should now proceed to determine whether the Agency has complied with all rulemaking requirements, and in so doing, determine whether the Chief Hearing Examiner or the Agency is correct on the merits.

II. THE RECORD ESTABLISHES THAT THE RULES ADOPTED BY THE AGENCY ARE NEEDED AND ARE REASONABLE

A. The Chief Hearing Examiner Has Misconstrued the Obligation of the Agency to Make an Affirmative Presentation of Facts

The Agency agrees that it has an obligation to make an affirmative presentation of facts establishing the need and reasonableness of the rules. See Minn. Stat. §15.0412 subd. 4 (Supp. 1977). However, the Chief Hearing Examiner seems to express the view in his Report that each amendment made to the proposed rules requires a discussion in an individual finding of the reasons for the change. See Findings 6 and 7 at page 2 and Memorandum at page 9 of his Report. The correct test is not whether the findings explain why an amendment was made, but whether the final language is reasonable. In adopting rules an agency engages in many policy choices based on legislative facts in the record. As the Hearing Examiner said, "There is no one right answer -- there are only reasonable answers." Finding 9 at page

8 of the Hearing Examiner's Report. The original proposal may be reasonable, other choices may be reasonable, but the question is whether the adopted language is reasonable. Whether language in a final rule is the result of an amendment and was in the proposed rule initially is of no consequence. Therefore, the Attorney General should review the entire rules as adopted to determine whether the rules are supported by the record.

B. The Agency Has Demonstrated the Need for and Reasonableness of the Rules as Adopted

Before focusing on the specific provisions that the Chief Hearing Examiner found were not supported by the record, the Agency would like to emphasize that in its view the Agency has made an affirmative presentation of facts establishing the need and reasonableness of the entire rules. See Conclusion 4 at page 19 of the Agency's Findings of Fact and Conclusions. The Hearing Examiner also found that the rules were needed, Findings 7 and 8 at pages 4-6 of the Hearing Examiner's Report, and his Report contains numerous findings on the reasonableness of the rules. See, e.g., Finding 13 at page 13, Finding 14 at page 14, Findings 19, 20 and 21 at page 22, Finding 28 at page 27, Finding 30 at page 29, Findings 39, 40, 41 and 42 at page 53, and Finding 47 at page 55. The Agency does not believe it is necessary to set forth citations to the record where each of the provisions in the rules is supported but many of these citations can be found in the staff's submissions to the Hearing Examiner on March 9, 1978, and in the staff's memorandum to the Agency Board on July 7, 1978, and in PCA Exhibit 43. It is necessary, however, to discuss those provisions of the rules that the Chief Hearing Examiner said were not supported by the record.

1. February 3 Amendments - HW 2.B.2., HW 2.D.2., HW 2.D.4., and HW 3.

The need for and reasonableness of the February 3 changes to HW 2.B.2. are not only supported, but compelled by the record. Mr. Kinsey's statement of February 3, 1978, set forth in Exhibit 43 at page 4 and in the Transcript at 2923-24, amply demonstrates that adherence to the concentrations in List 2 in HW 2.B.2. as originally proposed would have required the Agency to ignore the revision of the evidence supporting those concentrations. The original concentrations in List 2 were directly based on a publication prepared by the U.S. Environmental Protection Agency in 1973 entitled Water Quality Criteria. In 1976 EPA revised its data in a new report commonly referred to as the Red Book. The Red Book is in the record as PCA Exhibit 20. The February 3 changes in the concentration levels for aldrin, chlordane, DDT, PCB and toxaphene were made to be consistent with the revised data in the Red Book.

The Chief Hearing Examiner also rejected the inclusion of chromium and arsenic and their compounds in List 2, although he seems more concerned about the inclusion being a substantial change than being unreasonable. Finding 9 at page 5 of the Chief Hearing Examiner's Report. In any event, their inclusion is reasonable. As Mr. Kinsey explained, PCA Exhibit 43 at page 4 and Tr. at 2923-24, the inclusion was based on the recognition that these substances are carcinogens for which the U.S. EPA has developed water quality criteria. Hence, it is possible to establish a level for these substances in leachate which conforms to judgments made by federal pollution control authorities.

In the Agency's view, it was reasonable to reject concentrations that were based on a source that had become obsolete and to rely on the newer data and it was reasonable to rely on EPA water quality data for known carcinogens. The Hearing Examiner not suprisingly agreed. The Hearing Examiner expressly found that the designation of "hazardous wastes" in HW 2.B.2., including the February 3 amendments, "is a reasonable implementation of the policy decisions which the Pollution Control Agency must make and that the record contains an affirmative presentation of facts which shows the reasonableness thereof." Finding 27 at page 27 of the Report of Hearing Examiner. He specifically found that "[i]t was reasonably established that all substances specified in List Two [HW 2.B.2.] are bioconcentrative and detrimental." Finding 16 at page 15. The Agency even made specific findings that these provisions were reasonable. Findings of Fact and Conclusions at page 2.

The Hearing Examiner and the Agency also expressly found that the Agency had demonstrated the need for and reasonableness of the February 3 amendments to HW 2.D.2., HW 2.D.4., and HW 3., with respect to evaluation of wastes. The Hearing Examiner specifically noted the improvements wrought by those amendments:

> These provisions are reasonable requirements for evaluating a waste. They do not require expensive carcinogenic and bioconcentrative tests. They relieve a waste producer from evaluating a waste against all of the criteria for a particular hazardous property once he has determined that a waste is hazardous under one of the criteria. The rules do not require needless tests, but allow the use of literature, data and experience in the evaluation of a waste. They allow the use of a less expensive method of testing for lethal doses and concentrations. They allow the use of only a single evaluation for similar wastes.

Finding 38 at page 53 of the Hearing Examiner's Report.

The Chief Hearing Examiner, however, thought that the evaluation requirements had been made less stringent and that there was no showing of reasonableness for these lesser requirements. Finding 10 at pages 5-6 of the Chief Hearing Examiner's Report. In order to review the reasonableness of these provisions one must understand the evaluation procedure. First, every person who produces a waste in Minnesota or who wants to dispose of a waste in Minnesota, unless it is an exempt waste (and no one contested the reasonableness of the exemptions, see Finding 28 at page 27 of the Hearing Examiner's Report), must evaluate the waste to determine whether it is hazardous. That requirement was in the rules as proposed and is in the rules as adopted. Any person then, who after evaluation of his waste finds that his waste has the properties of a hazardous waste, must file what is called a disclosure with the Agency. That requirement, too, was in the rules originally and is in there now.

The changes the Chief Hearing Examiner found were less stringent and not supported by a showing of reasonableness relate to whether a waste producer has the necessary information to evaluate his waste. The Agency submits that any changes in the rules that clarify that a waste producer need not conduct duplicative reviews or needless tests of his waste are only less stringent in the sense that the economic burden to the waste producer is reduced. The requirement that each waste be evaluated to determine whether it has hazardous properties is still in the rules; the changes merely reduce the economic burden in making that determination.

The Agency suggests that simply describing the kinds of changes made in the evaluation procedure, which the staff thought were

mainly clarifying changes, belies the Chief Hearing Examiner's finding that the record does not support them. For example, the new language in HW 2.D.4. that the Chief Hearing Examiner rejected provides that the results of the evaluation of one waste may be used to evaluate a second waste if the data from the first evaluation identifies the properties of the second waste. A second example is the change in HW 3.D.1.e., which clarifies that it may not be necessary to conduct actual tests to evaluate a waste. It would be senseless to analytically determine the flashpoint of benzene, for instance, when that temperature can be found in a chemical handbook. The other changes are further described and supported in PCA Exhibit 43 at pages 8 and 13.

A review of the evaluation and disclosure requirements in the rules indicates that the Chief Hearing Examiner was incorrect in finding that the need for and reasonableness of these provisions are not supported by the record. The Agency urges the Attorney General to so determine.

2. July 25 Amendments - HW 1.G., HW 8.C.3.d., HW 8.E.6., and HW 9.D.1.

HW 1.G. concerns preemption by federal law. The Chief Hearing Examiner concluded that the final version of this provision is "a correct statement of the law." Finding 7 at page 2 of the Chief Hearing Examiner's Report. Nevertheless, the Chief Hearing Examiner reached the extraordinary conclusion that this "correct statement of the law" is not supported by evidence in the record. The Agency submits that a correct statement of a legal doctrine is reasonable.

The Chief Hearing Examiner rejected the language in HW 8.C.3.d.

regarding economics are considered by the Hearing Examiner to be a "close call", the way in which he examines the issue is particularly set forth.

In deciding to what degree the Pollution Control Agency has a substantive burden to establish the economic impact of the proposed rules, the Hearing Examiner looked to the following statutes for guidance:

> In exercising all its powers the Pollution Control Agency shall give due consideration to the establishment, maintenance, operation and expansion of business, commerce, trade, industry, traffic and other economic factors and other material matters affecting the feasibility and practicability of any proposed action, including, but not limited to, the burden on a municipality of any tax which may result therefrom, and shall take or provide for such action as may be reasonable, feasible, and practical under the circumstances. Minn. Stat. § 116.07, subd. 6 (1976). [Emphasis added]

The Hearing Examiner also looked to Minn. Stat. § 15.0412, subd. 4 (1976) which reads, in part:

> No rule shall be adopted by any agency unless the agency first holds a public hearing thereon, affording all affected interests an opportunity to participate. . . .At the public hearing the agency shall make an affirmative presentation of facts establishing the need for and reasonableness of the rule proposed for adoption and fulfilling any relevant substantive or procedural requirements imposed on the agency by law or rule. . . . [Emphasis added]

The issue then is whether the agency must make an affirmative presentation of facts establishing the economic reasonableness of the proposed rules or whether the agency merely has to show that it reasonably gave "due consideration" to the economic impact of the proposed rules. The latter standard or burden of proof is obviously less stringent than the former.

In determining which standard to apply, the Hearing Examiner considered both the Environmental Rights Act and the Environmental Policy Act, wherein the Minnesota Legislature said that economic considerations alone shall not justify a material adverse effect on the environment. Minn. Stat. §§ 116B.09, subd. 2 and 116D.04, subd. 6 (1976).

After examining the issue, it is found that the Pollution Control Agency need only make a reasonable showing that it has given "due consideration" to the economic impact of the proposed rules.

then a waste? Would it depend on whether or not the utility pays a fee for having the by-product removed; receives a fee from the parties desiring the by-product; or merely gives the by-product to the party desiring its use? During the hearings, witnesses for the Pollution Control Agency indicated that such by-product is a waste.

Consider for a moment an oil refinery. The principal objective of an oil refinery may be to produce gasoline and fuel oils. A natural by-product resulting from the necessary distilling process may be asphalt. The oil refinery is not specifically designed nor is it in business specifically to produce asphalt. However, when the crude product is distilled, leaving nothing but asphalt, should this by-product be considered a waste?

Many situations comparable to the above examples can be envisioned. The proposed rules do not adequately address the issue as to when something becomes a waste. This determination should not be left to the visceral reaction of individuals employed by the Agency.

Accordingly, it is found that the proposed rules should be made more specific so as to at least establish guidelines for the determination of when something is or is not a waste.

30. With the exceptions mentioned, the above Findings support the proposition the proposed rules, as finally submitted, amended and supported by PCA Staff, are reasonable from a technological point of view.

The next determination of reasonableness is whether or not the proposed rules are economically reasonable.

31. Before making Findings concerning the reasonableness of the economics involved in the proposed rules, the Hearing Examiner feels that it is necessary to specify the way in which he applied the reasonableness test. It is important because the determinations of reasonableness regarding the economics are not as clear cut as, for example, was the case when determining the reasonableness of what is or is not hazardous waste under the rules as finally proposed. Because the determinations made

The above-quoted originally proposed rule is ambiguous and it can be argued that the original proposal addressed not only what would normally be considered "waste"; but brought within its purview substances contained in both raw materials and the final product.

The definition of "waste" in the proposed rules comports with the definition of hazardous waste found in Minn. Stat. § 116.06, subd. 13 (1976). The proposed definition of waste is:

> Any discarded material including, but not limited to solids, semi-solids, sludges, liquids, gases, and their vapors, mists, or dusts.

A key phrase in the definition of "waste" is" discarded material". It cannot be reasonably argued that discarded material should be interpreted to include raw materials or materials in a finished product. Thus, HW 2.B.1., as originally proposed, exceeded the ambit of hazardous waste subject matter. The rules as finally proposed by PCA Staff amended the improprieties of HW 2.B.1.

Based on the rules as finally proposed by PCA Staff, it is found that the express use of the word "waste" in the rules is reasonable. However, a similar finding could not be made if the Hearing Examiner only considered the rules as originally Noticed for Hearing and proposed.

Notwithstanding the finding of reasonableness as to the manner in which the word "waste" is expressly utilized in the proposed rules, a determination must be made as to the way in which the Pollution Control Agency intends to interpret the word in situations of doubt. For example, when is a particular substance a waste? When should the Pollution Control Agency regard an entity as having "discarded" a particular substance or material?

A coal-fired electric generating plant has as its principal purpose a conversion of energy stored in coal to electric energy for end-use customers. Flyash and bottom ash results naturally from this process. The utility may have no further use of such by-product. However, part of the by-product may be utilized for building roadways and highways. Is such by-product

it is noted that the State paid substantial sums of money for the research conducted by Battelle in creating the technical report. In the future, when contracts for a consultant services are executed by the State, it would be wise to use all practical means of avoiding an end product which contains exculpatory language of the type involved in this matter.

27. With the exception of HW 2.B.5., it is found that the designation of those wastes which are classified as "hazardous" and the criteria for determining whether a waste is hazardous under the proposed rules is a reasonable implementation of the policy decisions which the Pollution Control Agency must make and that the record contains an affirmative presentation of facts which shows the reasonableness thereof. The determination of reasonableness specifically applies to the rules as finally proposed by PCA Staff.

28. In addition to establishing which wastes are "hazardous", the proposed rules exempt certain wastes from being regulated as "hazardous wastes". The exemptions in the rules as finally proposed by PCA Staff are found to be reasonable.

The exemptions include wastes that could not administratively be regulated by the Pollution Control Agency such as normal refuse from households. Other exempt wastes include wastes which cannot technically and economically fall under the purview of the proposed rules and wastes which are already regulated through such vehicles as NPDES Permits or State Disposal System Permits.

29. After having considered the reasonableness of what is or is not classified as a hazardous substance under the proposed rules, one should consider whether the determination of what is and is not a "waste" is reasonable under the proposed rules.

For example, HW 2.B.1. as originally Noticed for Hearing and proposed, set forth a list (List One) of substances to be regulated as hazardous waste and specified that:

> A waste that contains a component specified in List 1 is a hazardous waste if the concentration of that component in any part of the waste at any time during or after its production exceeds 0.1% by weight. [Emphasis added]

During the hearing process, the "LEGAL NOTICE" was referred to as the Battelle disclaimer. Although issues concerning said disclaimer were raised and later dropped by members of the public participating in the hearing process, the Hearing Examiner determines that at least one principal issue raised by the so-called disclaimer must be addressed. The issue is whether such disclaimer is a fatal defect. The issue becomes cogent because statute requires the Agency to make an affirmative presentation of facts establishing the reasonableness of the proposed rules. Thus, is it reasonable to bottom proposed rules on a scientific/technical report which states on its face that it: ". . . makes [no] warranty or representation, express or implied, with respect to the accuracy, completeness, or usefulness of the information contained in [the] report. . . ."

The Hearing Examiner finds that in this particular proceeding, the so-called disclaimer is not a fatal defect. Aside from the report issued by Battelle, there is other supporting evidence in the record of the within proceedings for the selection of many of those wastes which are regulated as hazardous and for the criteria established to determine whether or not a particular waste falls under the purview of the proposed rules.

It was apparent to the Hearing Examiner that the so-called disclaimer was designed to limit any liability that may befall Battelle. The so-called disclaimer was, in fact, an exculpatory clause wherein Battelle implied that they had the expertise to deal with the subject matter at hand but desired to exculpate themselves where the expertise was exercised in good faith.

The subject matter addressed in PCA Exhibit 26 was the subject of intensive questioning by the public. Neither such questioning nor any rebuttal testimony convinced the Hearing Examiner that the body of text of PCA Exhibit 26 was anything other than reasonable scientific and technical data, conclusions and recommendations. On its face, the technical report appears logical and well-reasoned and contains substantial supporting references.

Notwithstanding the Findings contained in this Paragraph,

lated party to waive public hearing and thereby become bound by the Agency decision. Such waiver would cause the waste to be considered hazardous for purposes of the entire regulation.

As HW 2.B.5. has been finally proposed, it allows an unreasonable amount of discretion for the Agency to classify and regulate a waste as hazardous thereby evoking a rule with force and effect of law without the benefit of public rulemaking procedures.

25. Not every waste which could have logically been classified as "hazardous waste" falls under the impact of the within considered proposed rules. Some such wastes are not currently regulated; are already regulated by existing rules of such agencies as the Pollution Control Agency and the Department of Health; or will be the subject of regulatory control under rules that will be proposed in the future by the Pollution Control Agency.

The fact that the proposed rules do not cover all waste substances that may be considered "hazardous waste" is not unreasonable. Classification and regulation may take one step at a time, addressing itself to those phases of a problem which can be reasonably administered by the agency and seem most acute to the regulatory body.

26. Selection of those wastes which are classified as "hazardous" in the within considered proposed rules and the criteria applied to determine whether or not a particular waste is hazardous was, in large part, based upon a report issued by Battelle Pacific Northwest Laboratories entitled, "Toxicological Criteria for Defining Hazardous Wastes". The report is PCA Exhibit 26.

The Battelle Report contains the following "LEGAL NOTICE" on its inside front cover:

> This report was prepared by Battelle as an account of sponsored research activities. Neither Sponsor nor Battelle nor any person acting on behalf of either: (a) makes any warranty or representation, express or implied, with respect to the accuracy, completeness, or usefulness of the information contained in this report, or that the use of any information, apparatus, process, or composition disclosed in this report may not infringe privately owned rights; or (b) assumes any liabilities with respect to the use of, or for damages resulting from the use of, any information, apparatus, process, or composition disclosed in this report.

classified as hazardous under its provisions.

It is found that the Board of the Pollution Control Agency should consider revising proposed HW 2.B.5. to allow for public hearing before a waste becomes permanently classified as hazardous under the provisions of this rule. In other words, because protection of the environment may necessitate immediate but temporary action on behalf of the Director, the Agency must be allowed to act swiftly to classify an otherwise nonhazardous waste as hazardous but provision should be made thereafter for a public hearing process before such classified hazardous waste is permanently classified as hazardous.

Such suggested amendment would eliminate arguments that the proposed rule allows too much discretion by the Agency.

The federal government and most states do not provide for the structured type of rulemaking hearing that is found in Minnesota. Only a few states, including Iowa, Massachussetts, Minnesota, Nebraska, Ohio, Virginia and Wisconsin have structured rulemaking hearings wherein legislation mandates rigid procedural requirements. Minnesota has quite rigid procedural requirements including publication of notice of intent to solicit outside information, prior published notice of the public hearings, full and complete public participation in the form of verbal and written comments, questioning of agency witnesses, a formal review by the Minnesota Chief Hearing Examiner on the issue of "substantial change", the proposing agency has a statutory burden to affirmatively show the need and reasonableness of the proposed rules, and there is a formal review by the Office of the Minnesota Attorney General. The foregoing shows a strong legislative intent in Minnesota for all forms of rulemaking to encompass full and complete public participation under structured conditions. Proposed HW 2.B.5. would better comport with apparent legislative intent if it allowed the Agency to make an emergency-type determination that a particular waste is hazardous; followed by a public hearing on this issue of whether such waste should be permanently considered hazardous waste. The Agency Board might also consider making provision for the regu-

Agency reasonably classified oxidative materials as hazardous. Oxidative materials are reasonably defined as those materials with the property to readily supply oxygen to a reaction in the absence of air. Specific oxidative materials are set forth but the list is reasonably nonexclusive in that materials not listed may also be classified as oxidative.

23. [Generic Category Criteria] Both petroleum waste and used crankcase oil is classified under the proposed rules as being hazardous. This classification is reasonable based in large part on the fact that oils present special waste management problems in that they are persistent and have historically shown a tendency to damage fishing resources when present in water resulting from the tainting of fish flesh. Furthermore, these hazardous materials could contain a myriad of harmful and hazardous components.

Additionally, the Pollution Control Agency classifies as hazardous waste that is a mixture of small amounts of unrelated chemicals such that the description of any sample or set of samples is not representative of the total waste.

24. [Generic Category Criteria] The last classification of wastes which are proposed to be regulated as hazardous is found in HW 2.B.5. The proposed rule is very general and provides that any other waste not specified as hazardous under other provisions of the rules may be classified as "hazardous waste" if the Director of the Pollution Control Agency (see HW 2.H.2.) determines that the waste has one or more of the properties of a hazardous waste or because the waste cannot be handled by routine waste management techniques because it poses a substantial or potential hazard to human health or other living organisms.

Under the rationale used in this Report to determine "reasonableness", the Hearing Examiner finds this proposed rule is not a reasonable policy decision by the Agency.

Furthermore, HW 2.B.5. is unreasonable in that the Agency has not shown nor can it show that it considered the possible economic impacts associated with this proposed rule because there is no way of determining what wastes, if any, would be

HW 1 p. 3

area to the groundwater aquifer. However, groundwater, as it enters surface water, will once again be diluted and credit for that dilution must be made.

There are springs which receive this entire supply from groundwater aquifers, and therefore would evidence no dilution upon entering of the leachate. However, it is more often the case that groundwater at any one point in the surface water will constitute less than one percent of the total flow in that water volume. It is reasonable to select the more conservative estimate and thereby credit the surface water with an additional dilution of 100 to 1. Thus, movement from a landfill to surface water which would sustain a viable aquatic community results in leachate diluted by a factor of 10,000. The National Academy of Sciences has suggested that viable aquatic communities cannot be mainted if the pH level falls below 6.5 or is greater than 8.5. Instituting the 10,000 to 1 dilution factor, it is reasonable to conclude that a material would be a hazardous waste if it has a pH value of less than 2.5 or greater than 12.5.

Considering the above scenarios, the Agency appropriately elected to define the criteria for hazardous waste as those materials having a pH value of less than three or greater than 12.

20. [Test Value Criteria Approach] The Pollution Control Agency also considered flammability in determining which materials were to be classified as hazardous. The Agency reasonably concluded to combine the distinction made by the Federal Department of Transportation as between materials that are flammable and materials that are combustible. The Pollution Control Agency also included the definition used by the Federal Department of Transportation of a flammable solid.

21. [Generic Category Criteria Approach] The Pollution Control Agency reasonably clasified as hazardous, explosive materials including, but not limited to, explosives as defined in 49 C.F.R. § 173.50 (1976), and compressed gas as defined in 49 C.F.R. § 173.300 (1976).

22. [Generic Category Criteria] The Pollution Control

products in bulk commerce that are shipped across the ocean.

18. [Test Value Criteria Approach] The Pollution Control Agency also examined the irritative properties of noncorrosive materials. Concern was with the ability of a waste when in direct contact with a disposal site operator or other individuals to provide reversible injury to a biological membrane at the site of contact. The proposed rule reasonably adopts criteria based on practical experience of resulting first and second degree burns and criteria set forth in 16 C.F.R. § 1500.41 (1977). Materials meeting the criteria are considered hazardous under the proposed rules.

19. [Test Value Criteria Approach] The Agency also considered the parameter of acidity or basicity from a corrosive standpoint. Accordingly, there are three reasonable scenarios; the first being direct contact. It was reasonably determined that primary irritation can be obtained from a substance which evidences a pH of less than 2.5 or greater than 11.5. However, it is noted that those levels are determined with tests on corneal membranes, which apply to the eye as opposed to contact with the epidermis or outside skin.

A second scenario is the potential for pH contamination of groundwater subsequently used for domestic or recreational purposes. Once again, it is reasonable to have considered an effective dilution of 100 to 1. The National Academy of Sciences recommended that water used for domestic use or bathing purposes not have a pH value of less than five or greater than nine. Accordingly, instituting the dilution factor of 100, suggests that a material is hazardous if in its present form prior to leaching into the groundwater it has a pH of less than three or greater than 11.

The third scenario reasonably considered was the possibility that acid or base properties of a hazardous waste could evidence effects on aquatic communities exposed via contamination of an aquifer which subsequently fed surface waters. It now becomes necessary to extend the scenario beyond the effective dilution of 100 to 1 for movement of leachate from a landfill

safety factor for extrapolation of acute data to chronic or sublethal effects, materials with an LC_{50} value as a dust of 2,000 milograms per cubic meter or less, must be considered as hazardous wastes.

In looking at substances which are exposed as a vapor rather than a dust, it was reasonably decided to use the National Academy of Sciences' definition that materials with a TLV (an acceptable limit concentration in air for exposure over an eight-hour period of working personnel to a substance) value of 100 ppm or less should be considered as toxic substances. It should be noted that there is already a safety factor involved in that TLV value. The threshhold limit value is established by looking at the LC_{50} data, looking at lethal concentrations, applying the appropriate safety factors, and then setting the threshhold limit value as that value that is acceptable under work conditions for an eight-hour day.

The National Academy says that materials with a TLV of 100 ppm or less should be considered toxic. Again, looking at shorter exposure periods and higher concentrations, it is logical to institute a constant product of exposure time and concentration and reason that a criteria level of 1,000 ppm or less for vapors to be considered as hazardous waste.

The Agency also looked into aquatic toxicity. Once again, due to difficulty in implementing chronic exposure criteria, it was reasonably decided to select the use of acute data. Specifically, the use of 96 hours LC_{50} data. The scenario considered leachate movement into the groundwater and subsequent entry to the surface water where a viable aquatic community may exist. Once again, using the reasonable dilution factor of 10,000 to 1 and reasonably determining that the threshhold should be 100 ppm; a waste should be considered hazardous if it exhibits a 96-hour LC_{50} of 100 ppm or less. Use of the 100 ppm puts Minnesota Rules in compliance with Grades 3 and 4 of the National Academy of Sciences' categorization which are defined as toxic and moderately toxic substances, and also categories A, B and C of the IMCO categorization system which is applied to

Consequently, it was recommended to use 1,000 as criteria for determining a substance to be hazardous if it has a dermal toxicity at that level or less.

The problem of determining acceptable toxicity limits was appropriately considered by the Pollution Control Agency. Although lethality was used as a end-point in the evaluation of wastes, it is obviously essential to select toxicity limits so as to ensure not only protection from the lethal effects of substances so far as exposed persons are concerned, but also from substantial potential or present acute non-lethal effects. Furthermore, it is reasonable and necessary that toxicity limits offer protection from chronic or long-term effects of exposure to hazardous materials.

A variety of toxicity limits are used by federal regulatory agencies for the toxicological evaluation of wastes. It is found that such limits may be inadequate so far as hazardous wastes are concerned. For example, an oral LD_{50} of 50 milograms per kilogram body weight is used by some agencies. This means that about five grams or a teaspoon of the material ingested by a 100-kilogram man may be expected to produce severe or even fatal poisoning. Consideration of hazardous waste exposure scenarios suggests that such an exposure could occur in the handling of wastes.

Thus, in setting toxicity limits, one must consider both conditions and probability of exposure. In this context, it is reasonable and necessary that the toxicity limit must be higher than the probable exposure in order to provide an adequate safety factor to ensure protection from non-lethal effects.

In addition to oral and dermal toxicity, the Agency considered toxicity via the inhalation route. Once again, when considering whether to deal with chronic or acute data, it was reasonably decided to deal with acute data. Using an LC_{50} criteria, it was reasonably determined that if a material was toxic at 100 milograms per cubic meter, the operator of a disposal site suffering such exposure could receive lethal effects. Utilizing a safety factor of 20, which is the minimum recommended

In the direct dousing scenario, a 100-kilogram man was considered. This man would be threatened with lethality if the substance was toxic at 1,000 milograms per kilogram body weight or less. This, in essence, is one-tenth of a percent of his body weight.

The second scenario dealt with direct exposure to contaminated groundwater for the purposes of bathing and washing. Standard usage rates in the American home run from three to seven times the water used for bathing and washing than is used for potable water used on a daily basis. Consequently, if a material was toxic via the dermal exposure route, an individual using contaminated water would be exposed to three to seven times the water he would be exposed to if it were toxic only through the drinking, consumptive route. However, the dermal route is less efficient than the oral route.

Consequently, nontoxic materials from an acute oral standpoint should be defined as those with an LD_{50} of greater than 5,000 milograms per kilogram body weight. Nontoxic materials from a dermal exposure route are those with an LD_{50} value of 2800 milograms per kilogram body weight, suggesting the efficiency is half that of oral dosing. Therefore, the three to seven times water use for contact purposes as opposed to potable water supply are, in effect, one and one-half to three and one-half times. Existing criteria proposed by the United States Environmental Protection Agency for defining hazardous substances uses limits for dermal toxicity four times the limit established for oral toxicity. Thus, they define as a hazardous substance a material with an oral LD_{50} of 50 milograms per kilogram body weight or less. They define as a hazardous substance materials from a dermal toxicity standpoint as those with an LD_{50} of 200 milograms per kilogram body weight or less. As stated above, the oral toxicity scenario developed was a criteria level of 250 milograms per kilogram of body weight which was adjusted to 500. The same multiplier of four used by the EPA on the 250, result in the same value one would derive with the direct dosing, that is 1,000 milograms per kilogran body weight.

eter at levels above 10,000 parts per million, and therefore a conservative estimate is to assume an equivalent dilution of 100 to 1.

Referring to a 100- kilogram man, he is consuming two and one/half liters of water each day, both in direct consumption and in the cooking of his meals. Consequently, the material would have to be toxic at 250 milograms per kilogram on an oral LD_{50} basis to threaten that individual with lethal effects from one day's consumption of groundwater contaminated by leachate from the hazardous waste landfill.

Dealing with lethal effects and dealing on the edge of lethal effects does not provide ample safety for these types of proposed rules, and there there is likelihood that small children will be using the potable water well, there is also a great likelihood that sublethal effects would be evidenced at much lower doses.

Additionally, there are other classification systems which use 500 milograms per kilogram body weight as criteria for defining materials as toxic. Consequently, the Pollution Control Agency adjusts the 250 criteria to 500 milograms per kilogram of body weight.

The use of such criteria levels is reasonable and justified because the exposure route, via potentially contaminated groundwater in potable water wells, is a more insidious type of exposure than the direct spill into a surface water wherein the event is known and reported so that the downstream user can be notified. The potential for leaching into groundwater does not come with such warning and therefore a measure of safety is justified.

In addition to considering oral toxicity, parameters were considered dealing with dermal toxicity. Again, a common measure utilized was the LD_{50} value.

The two scenarios considered regarding dermal toxicity were direct dosing of the operator or individuals at a hazardous waste site, and potential leachate contamination of groundwater subsequently used for bathing and washing purposes.

microgram or one-millionth of a gram per kilogram of body weight; this amounts to about one-15 millionth of an ounce per pound of body weight. Alternatively, large amounts of other chemicals may be required to produce toxicity; for example, it is well known that common table salt, if injected in large enough quantity may be toxic or even lethal if consumed in large quantities.

A second fundamental principle is that the harmful effects of substances are dose-dependent; which means that the effects will depend on the amount of the substance absorbed into the body. Thus, as the dose or intensity of the exposure is increased, the degree of damage is also increased. For example, small doses of alcohol produce a mild degree of central nervous system depression in human beings; ingestion of a larger dose produces a more profound degree of nervous system depression so that a person may walk or speak with difficulty; and a much larger dose may produce unconsciousness or even death. The first parameter of toxicity considered was oral toxicity. Efforts were reasonably focused on examining acute toxicity as opposed to chronic exposure. The value selected was the use of an oral LD_{50}. There were two reasonable scenarios considered under which materials were foreseen to present acute oral toxicity hazards on the public via operators of waste management sites.

First, the direct dosing type of hazard where a container of hazardous waste could lose its integrity and essentially subject a waste management site operator to direct intake of the material.

Using a standard intake of 10 cubic centimeters, a 100-kilogram man is exposed to materials which would be toxic to him if they had an oral LD_{50} of 100 milograms per kilogram body weight.

The second scenario considered was the potential of burial of hazardous waste in a landfill site, subsequent leaching of the material to an aquifer, movement down the aquifer to a well used for potable water supply.

Historically, leachate does not reach a half- mile perim-

List Two of proposed HW 2. B.2. which specifies specific wastes as hazardous, is a result of consideration of bioconcentrative materials. The compounds shown in List Two are those identified by the United States Environmental Protection Agency as being hazardous because of the potential for bioconcentration. The end result of bioconcentration is that as one examines the food chain, a hazardous substance can become concentrated to a higher degree in each succeeding organism participating in the food chain. It is also known that the toxic effects or the primary toxic effects occur in the species residing at the top of the food chain which can lead to the reduction or extinction of the living organism at the top of any particular food chain examined.

There is no simple test adequate to evaluate the bioconcentrative potential of wastes. Much of what is known about bioconcentration has been derived from actual field experience and this knowledge has been used by the United States Environmental Protection Agency in identifying bioconcentrative chemicals. It was reasonably established that all substances specified in List Two are bioconcentrative and detrimental.

17. A major parameter considered was toxicity. Toxicology can be defined as the science of poisons; it is concerned with for example, the actions of poisons on living systems; the identification and quantitive estimation of toxic materials in tissues, body fluids, foods, air, water, etc.; antidotes and other remedial measures employed to counteract the effects of poison and, finally, the establishment of safe limits of exposure to potentially toxic materials. A substance may be considered a poison when it gains access to a living system in sufficient quantities so that it consistently and adversely alters the function of that system.

Two principles of toxicology are particularly relevant. The first is that the toxicity of chemicals is known to vary widely. In some cases, exposure to extremely small amounts of a chemical may prove harmful. For example, tetrachlorodioxin is toxic to some animal species in doses of less than one

The Pollution Control Agency reasonably and properly took an approach to develop reasonable scenarios for the management of wastes to determine the range in which the hazardous criteria should fall, then to look at existing definitions, existing criteria by other agencies within that range, and adjust the criteria accordingly so that the generator of the waste, the transporter of the waste and the disposer of the waste will have the maximum opportunity afforded them of dealing with consistent sets of criteria and categorizations.

15. Generally, the proposed hazardous waste rules classify hazardous wastes according to three different categories.

The first category (See Paragraph No. 16) is two lists of substances that are regulated to provide protection against possible neoplastigenic, teratogenic and mutagenic wastes in List one and biocentrative effects of wastes in List Two.

The second category (See Paragraphs No. 17, 18, 19 and 20) that provides for test value criteria is designed to regulate and protect against possible toxic, irritative, corrosive, and flammable effects of wastes.

The third category (See Paragraph No. 21), the generic category criteria, is designed to regulate and protect against possible explosive, oxidative and general health hazards created by unregulated waste disposal.

16. [List Approach] List One in proposed HW 2.B.1. which specifies specific wastes as hazardous is the result of consideration, in part, of carcinogens which are basically treated under a list approach. The chemicals shown in list one are those regulated by OSHA and those recommended for regulation by NIOSH as carcinogens. Although the number of suspected carcinogens is very large, the compounds listed are those for which a strong case for carcinogenicity and, therefore, inclusion in this list can be made. Furthermore, it is important to note that there is no simple accepted test currently available for the evaluation of the carcinogenic potential of wastes. There is also inadequate dose response data available at this time to determine a safe level of exposure to a carcinogen.

analysis of a specific waste to determine whether it does or does not qualify by the criteria established.

13. The proposed rules reasonably utilize a combination of the list and criteria approaches. An advantage of a combination of a list and criteria approach is that it allows consideration of compounds which are difficult to test because of costs, or availability, or lack of availability of testing procedures. Another advantage of the combination is that it applies the best of each system while attempting to minimize the disadvantages of each.

14. Having selected a combination list and criteria approach, one is faced with two possible alternatives for generating criteria.

The first alternative is to consider compatibility with existing regulations and definitions. There are numerous categories of hazardous substances, hazardous materials, toxic pollutants, toxic substances, etc. defined by Federal Law, state law and the various regulatory agencies. It is possible to select criteria and a definition for hazardous wastes based simply on the desire to have levels that are compatible with existing definitions. In so doing, however, one accepts the rationale and the methodology employed by that agency for materials which are used in commerce or exposed to the public in a manner that might be different than what would be expected from normal waste management practices. In other words, waste materials will be processed and managed in a unique set of circumstances, and if a hazard is not appropriate for that set of circumstances, use of criteria based on that hazard would not be equitable.

Therefore, it is found that the second approach is preferable. The second approach being the development of scenarios or the probable sequence of events which could occur during normal management of wastes and the determination of how toxic a material would have to be before it would present a hazard under those circumstances.

12. There are two basic approaches utilized in selecting methodologies for identification of criteria to be used in defining hazardous wastes.

The first approach is a listing wherein materials are listed as hazardous. Any waste then found to come under the generic heading found in the list is ipso facto determined to be hazardous. This approach is found to have several strengths and several weaknesses. The strengths include the fact that it is very easily implemented in that at any one time the generators of waste have before them a specific list. Simply by determining the generic origin of their waste, a generator could determine whether the waste is held to be hazardous or nonhazardous. The disadvantage of this type of approach is its inflexibility and its inequity in that wastes, while coming under a single generic classification, are not by any means similar in their intrinsic properties. There may be many wastes which are defined as operating waste, industrial sludges, and so forth which vary greatly in their properties. Consequently, there is a great deal of equity lost when an entire category is classified as hazardous or nonhazardous.

Similarly, a listing approach is somewhat inflexible to the continuing development of new chemicals and new waste streams as processes are modified and products are generated.

Finally, one cannot establish a listing approach at the outset because it is first necessary to decide how the list will be generated. Typically, a list would be generated through the use of the second type of approach in defining hazardous wastes. And that is the use of criteria.

The criteria approach depends upon the selection of threshhold values for specific characteristics of waste material, such that any waste at any time can be submitted to a series of tests, the results of which would thereby be compared with the criteria, defining whether the waste falls within or without the category definition.

There are disadvantages to the criteria approach in that it can be expensive to implement because it could require the

catalytic converters. Amoco Oil Co. v. EPA, 501 F.2d 722, 6 E.R.C. 1481 (D.C. Cir. 1974).

Another leading case in this area, and one relied on by the Ethyl court, is Industrial Union Department, AFL-CIO v. Hodgson, 499 F.2d 467 (D.C. Cir. 1974), involving a review of asbestos regulations promulgated by the Secretary of Labor. There the court said:

> From extensive and often conflicting evidence, the Secretary in this case made numerous factual determinations. With respect to some of those questions, the evidence was such that the task consisted primarily of evaluating the data and drawing conclusions from it. The court can review that data in the record and determine whether it reflects substantial support for the Secretary's findings. But some of the questions involved in the promulgation of these standards are on the frontiers of scientific knowledge, and consequently as to them insufficient data is presently available to make a fully informed factual determination. Decision making must in that circumstance depend to a greater extent upon policy judgments and less upon purely factual analysis.

Id. at 474 (footnote omitted).

10. Note must be taken that during the hearing process and before the close of the record, the Pollution Control Agency made various amendments to the proposed rules as originally published for hearing.

One of the principal benefits of a public hearing process is that it gives the administrator the benefit of criticisms and suggestions from representatives of the industries that will be regulated. It was just such a give-and-take process that prompted the Pollution Control Agency to amend the rules as finally proposed for adoption.

Because of such amendments, it will be necessary during certain portions of this Report, to specify whether an examination of the "reasonableness" of the proposed rules is being examined in light of the original proposal or the rules as finally proposed for adoption.

11. In determining the issue of "reasonableness", this Report will first examine the reasonableness of the wastes regulated by reason of being designated as "hazardous" pursuant to the proposed rules.

> us, when technological "advances" present dangers unappreciated--or unrevealed--by their supporters. Such agencies, unequipped with crystal balls and unable to read the future, are nonetheless charged with evaluating the effects of unprecedented environmental modifications, often made on a massive scale. Necessarily, they must deal with predictions and uncertainty, with developing evidence, with conflicting evidence, and, sometimes, with little or no evidence at all. Today we address the scope of the power delegated one such watchdog, the Environmental Protection Agency (EPA). We must determine the certainty required by the Clean Air Act before EPA may act to protect the health of our populace from the lead particulate emissions of automobiles.
>
> * * *
>
> . . .We find that deletion of the findings requirement for action under Section 211(c)(1)(a) [of the Clean Air Act] was a recognition by Congress that a determination of endangerment to public health is necessarily a question of policy that is to be based on an assessment of risks and that should not be bound by either the procedural or the substantive rigor proper for questions of fact.
>
> * * *
>
> . . .The Administrator may apply his expertise to draw conclusions from suspected, but not completely substantiated, relationships between facts, from trends among facts, from theoretical projections from imperfect data, from probative preliminary data not yet certifiable as "fact", and the like. We believe that a conclusion so drawn--a risk assessment--may, if rational, form the basis for health-related regulations. . . .
>
> All of this is not to say that Congress left the Administrator free to set policy on his own terms. To the contrary, the policy guidelines are largely set, both in the statutory term "will endanger" and in the relationship of that term to other sections of the Clean Air Act. These prescriptions direct the Administrator's actions. Operating within the prescribed guidelines, he must consider all the information available to him. Some of the information will be factual, but much of it will be more speculative--scientific estimates and "guesstimates" of probable harm, hypotheses based on still-developing data, etc. Ultimately he must act, in part on "factual isues", but largely "on choices of policy, on an assessment of risks, [and] on predictions dealing with matters on the frontiers of scientific knowledge . . . ." Amoco Oil Co. v. EPA, supra 163 U.S. App. D. C. at 181, 501 F.2d at 741. A standard of danger--fear of uncertain or unknown harm--contemplates no more.

Id. at 6, 24, and 28, 8 E.R.C. at 1786, 1801, and 1804-1805. The Amococase cited in Ethyl was another case by D. C. Circuit in which the court upheld for the most part regulations of EPA prohibiting use of leaded gasoline in automobiles fitted with

An example of a federal agency acting on legislative facts is Mourning v. Family Publications Service, Inc., 411 U.S. 356 (1973), where the U.S. Supreme Court upheld regulations of the Federal Reserve Board governing credit transactions of more than four installments. Professor Davis' discussion of the Mourning case is helpful:

> [T]he Supreme Court had no power to change "four" to three or five, because Congress had delegated that power to the Board and the Board had made its determination. On the question of what the number should be, the Court could do no more than determine whether "four" was arbitrary, capricious, an abuse of discretion, or otherwise not in accordance with law.

K. Davis, Administrative Law of the Seventies, 206 (Cumulative Supp. 1977).

Dry Color Manufacturers' Ass'n v. Department of Labor, 486 F.2d 98 (3rd Cir. 1973), involved temporary emergency standards of the Department of Labor intended to prevent exposure to 14 chemicals found to be carcinogens. In striking down the regulations, the Court essentially said the Department did not have sufficient reasons for the regulations. Davis, however, is critical of the Court's decision:

> If carcinogenicity of the chemicals in humans can be neither proved nor disproved by scientific evidence, the problem for rulemakers is not one of fact; it is one of making a legislative choice of policy in light of the absence of evidence. When an agency is assigned the task of making rules that are in the public interest, it seldom can prove with evidence what is in the public interest; it has to use its policy preferences when proof is lacking.

K. Davis, Administrative Law of the Seventies, 674 (1976).

Some of the recent cases involving rulemaking by federal agencies in the environmental and health areas indicate the kind of latitude agencies have in making these legislative policy decisions. A leading example is Ethyl Corp. v. EPA, 541 F.2d 1, 8 E.R.C. 1785 (D.C. Cir. 1976), where the Court upheld regulations of the EPA requiring a reduction of lead in gasoline.

> Man's ability to alter his environment has developed far more rapidly than his ability to foresee with certainty the effects of his alterations. It is only recently that we have begun to appreciate the danger posed by unregulated modification of the world around us, and have created watchdog agencies whose task it is to warn us, and protect

> . . .[H]owever, rate allocation is not a judicial or quasi-judicial function. Once revenue requirements have been determined it remains to decide how, and from whom, the additional revenue is to be obtained. It is at this point that many countervailing considerations come into play. The commission may then balance factors such as cost of service, ability to pay, tax consequences, and ability to pass on increases in order to achieve a fair and reasonable allocation of the increase among consumer classes. . . .It is clear that when the commission acts in this area it is operating in a legislative capacity, as the above cases have stated. The careful balancing of public policies and private needs is not a matter for the courts, unless statutory authority has been exceeded or discretion abused. . . .In ascertaining whether or not the statute has been contravened, the district court must give wide latitude to the commission in allowing it to consider many factors which might not ordinarily be considered by a court, as we have explained above. This is so because, while the court is qualified to review agency findings when an agency acts in a quasi-judicial manner in factual matters, it is not so qualififed to review legislative judgments when social policies must be weighed in the balance.

Id. at 356-357.

In the within considered rulemaking proceeding, many of the facts are legislative facts --policy decisions and judgments. A dermal toxicity value that distinguishes a hazardous waste from a nonhazardous waste is a legislative fact. There is no one right answer--there are only reasonable answers.

In another Public Service Commission ratemaking case, Northwestern Bell Telephone Co. v. State, 253 N.W.2d 815 (Minn. 1977), the Minnesota Supreme Court distinguished the two kinds of facts involved in exercising a legislative function. There the Court said:

> In determining the extent of the allowable adjustment, it appears that the PSC was acting in both a judicial and a legislative capacity. In finding as a fact the amount of the 1974 impact of the contract, the PSC's decision was amply supported by the evidence. In deciding to limit the adjustment to a one-year period, the PSC determined as a matter of public policy that changes occurring more than one year beyond the test year would best be considered in proceedings taking into account all of the facts necessary to accurately set Bell's rates. This determination cannot be said to be arbitrary or unjust. . . .

Id. at 822. See also, Northwestern Bell Telephone Co. v. State, 299 Minn. 1, 216 N.W.2d 841 (1974) and Reserve Mining Co. v. Herbst, 256 N.W.2d 808 (Minn. 1977).

Although the federal rulemaking process differs from that of Minnesota, it would be helpful to examine the federal system.

cious standard can be defined as follows:

> That standard [arbitrary and capricious] is a narrow one, to be applied only where administrative action "is not supportable on any rational basis" or where it is "willfull and unreasoning action, without consideration and in disregard of the facts or circumstances of the case."

Greenhill v. Bailey, 519 F.2d 5, 10 (8th Cir. 1975). Reasonableness, then, means to have a rational basis for the action.

In setting forth the findings that establish the rational basis for adoption of these hazardous waste rules, the Agency is not limited to only those facts that are supported by substantial evidence in the record. Rulemaking is a legislative function; it is not an adjudicatory function like a contested case is. There is a difference between the kind of facts relied on in a rulemaking hearing and the kind of facts relied on in an adjudication. Professor Kenneth Culp Davis identifies this difference:

> Two main elements in rulemaking are (1) facts, and (2) ideas about policies. The two are generally interwoven in such a degree that in some parts of the whole problem of what to do, they are inseparable. Even so, a main element in rulemaking is necessarily the policy choice that the administrator must make. Adoption of a rule may require some understanding of facts, but it always requires legislating. Courts must leave administrators free to legislate, within the limits of rationality. And legislating inevitably involves the addition of something to the facts in the rulemaking record.

K. Davis, Administrative Law of the Seventies, (Cumulative Supp. 1977) (emphasis in original).

The Minnesota Supreme Court has recognized the difference between legislative facts and adjudicatory facts and has identified the support needed to uphold the two kinds of facts. In St. Paul Area Chamber of Commerce v. Minnesota Public Service Comm'n., 251 N.W.2d 350 (Minn. 1977), the Court said:

> [T]he substantial evidence test of § 15.0425 [is] applicable to commission decisions only when it is acting in a quasi-judicial manner, in a role similar to that of a trial judge sitting without a jury. In cases where the commission acts primarily in a judicial capacity, that is, hearing the views of opposing sides presented in the form of written and oral testimony, examining the record, and making findings of fact, the administrative process is best served by allowing the district court to apply the substantial evidence standard on review. . . .

of the residues. Not actually equipped to handle waste disposal, the St. Louis firm contracted with the Bliss Waste Oil Company to remove the material. The Company is owned and operated by Russel Bliss, who deals in waste oil, lubricants, organic solvents, and transformer oils generated by automobile service stations and industrial sources. For many years, Mr. Bliss had been spraying the nonrefinable grades of waste oils on horse arenas as a means of dust control.

From February to October, 1971, the Bliss Waste Oil Company transferred six truckloads (approximately 18,000 gallons) of industrial residues containing about 300 ppm dioxin from the original storage tank to its own storage tanks in eastern Missouri. Three horse arenas and a farm road on Mr. Bliss's own property are known to have received the dioxin-contaminated oil. The dioxin concentration of the soil in the most serious affected horse arena was analyzed at about 30 ppm. The overall toll in the four disposal areas can be summarized as follows: Ten persons developed toxic symptons (two children became seriously ill), and at least 63 horses died along with 6 dogs, 12 cats, 70 chickens, hundreds of birds, numerous rodents and insects. In addition, there were 26 known abortions and six birth abnormalities among the horses.

Two lawsuits, for a total of $954,000 in compensatory and punitive damages, had been filed by the former owners of one of the horse arenas against Bliss Waste Oil Company, et al. Also, a lawsuit for $60,000 has been filed by several horse owners against one of the other two horse arenas. The estimated total financial loss, based on filed lawsuits (excluding punitive damages), is close to $500,000.

8. Having determined that there is a need for rules to regulate hazardous waste, this Report will address the issue of whether the proposed rules are reasonable.

9. In determining the reasonableness of the within considered hazardous waste rules, the Examiner applied the following meaning to the word "reasonableness": "Reasonableness" is the opposite of arbitrariness and caprice. An arbitrary and capri

Tr. pp. 73-165, PCA Exhibit No. 6 and PCA Exhibit No. 26 at Appendix A.

Numerous case histories of the mismanagement of hazardous waste are cited in the record. For illustrative purposes, one such case will be described hereinbelow as a general example.

In August, 1971, a six-year old girl was admitted to a Missouri children's hospital with severe bladder pain, urinary urgency, and inability to pass urine. She was listless, had been bleeding from the nose, and had diarrhea and a headache. Over a period of several hours, she gradually was able to void in small amounts, but her urine was grossly bloody. Her case was diagnosed as acute hemorrhagic cystitis with signs of focal pyelonephritis.

A significant clue in this case was that the child lived on a farm where many animals had recently died. Following the spraying of the farm's horse arena in late May with waste oil for dust control, numerous birds, cats, dogs, and horses developed a mysterious fatal illness. The child was known to have played frequently in the soil of the horse arena during the summer. At the time the child was allowed to play in the arena, no one had yet associated the oil used for dust control with the mysterious fatal illnesses falling on the abovementioned animals.

Analysis of soil samples taken from the arena initially identified a complex mixture of organic compounds and the toxic agent responsible for the outbreak of poisonings was ultimately identified as dioxin, one of the most toxic chemicals known. Based on animal studies, both the oral and the dermal lethal dose for humans have been established in the range of micrograms per kilogram body weight.

Residues containing a high concentration of the dioxin which eventually ended up in the horse arena were emptied for about one and one-half years into a large storage tank on a site in Missouri.

Periodically, the residues were hauled away by a disposal company to Louisiana for incineration. In 1971, a contract was executed with a St. Louis, Missouri firm for $4,625 to dispose

a generator who evaluates his wastes and finds them to be hazardous; address criteria for the location, operation and closure of a hazardous waste facility; provide for the proper transporting of hazardous wastes and methods to keep track of a generator's hazardous waste from storage through disposal; application, review and issuance procedures for the permitting of hazardous waste facilities; specify that the counties within the metropolitan Twin City area must participate in the hazardous waste program and establish procedures for Pollution Control Agency review of the hazardous waste programs of other counties which elect to participate in the program; and specify the requirements for reporting hazardous waste spills to the Pollution Control Agency and require recovery as soon as safely possible.

6. Based on an industrial waste survey jointly conducted by the Minnesota Pollution Control Agency and the Minnesota Association of Commerce and Industry, an estimated 150,000 tons of potentially hazardous waste are generated yearly in Minnesota. The major wastes reported in the survey were waste sludges, which accounted for 43 percent of the total; oils which were 20 percent of the total; solvents which accounted for 13 percent of the total; flammables which accounted for 8 percent; and oxidizers, 7 percent. A great deal of the reported disposal was environmentally unacceptable or questionable. For example, 28 percent of the reported waste disposal was by land filling. Disposal of hazardous waste at sanitary landfills is prohibited by existing regulations of the Minnesota Pollution Control Agency.

Such mismanagement may result in dangerous, harmful and/or costly incidents.

7. The PCA Staff met its burden of making an affirmative presentation of facts establishing the need for rules to regulate hazardous wastes.

The record of the within considered proceedings adequately documented incidents of the mismanagement of hazardous wastes and the dreadful results of incidents which might have been avoided had adequate regulatory control existed. See, for example,

FINDINGS OF FACT

1. On September 29, 1977, the Executive Director of the Minnesota Pollution Control Agency filed the following documents with the Chief Hearing Examiner which were accepted as proper and correct as to form and content:

(a) Order for Hearing;
(b) Notice of Hearing;
(c) Affidavit of Receipt of the Secretary of State's list;
(d) Affidavit of Mailing;
(e) Statement of Need;
(f) Materials received pursuant to a notice of public meetings published in the State Register on July 13, 1976, at 1 State Register 23; and
(g) Statement of Evidence, including the names of agency personnel to appear on behalf of the agency.

All documents were available for inspection at the Minnesota Office of Hearing Examiners from the date of filing to the date of hearing.

On September 19, 1977, a Notice of Hearing and a copy of the proposed rules were published at 2 State Register 521, et seq.

2. All other relevant, substantive and procedural requirements of statute or rule have been complied with for the purpose of establishing jurisdiction of the subject matter to proceed to public hearing pursuant to law.

3. The authority of the Minnesota Pollution Control Agency to propose and adopt hazardous waste regulations and to amend Minn. Reg. SW 1, 2, 3, 4, 6 and 7 is set forth in Minn. Stat. §§ 115.03, 116.06, 116.07, subds. 2, 4 and 4a., 116.101, and 473.823, subds. 1 and 3 (1976).

4. The proposed regulations are designed to monitor and regulate hazardous wastes from the time that they are generated until their final disposal at an appropriate site including interim storage and transportation. This "cradle to grave" approach is designed to minimize or eliminate the dangers inherent with the disposal of hazardous waste.

5. The proposed hazardous waste rules contain provisions which: Define terms used in the rules; provide conditions under which a variance may be granted; establish the criteria for determining whether a waste is hazardous; proscribe the duties of

In addition to the above specifically named participants, all interested persons, representatives of individuals or associations, and other interested groups present at the hearing had an opportunity to present evidence and question witnesses.

The record of proceedings remained open through the 9th day of March, 1978. Pursuant to Minn. Stat. § 15.0412, subd. 4 (1977 Supp.), the Hearing Examiner's Report is to be completed within 30 days after the close of the hearing record unless the Chief Hearing Examiner, upon written request of the agency and the Hearing Examiner, orders an extension. Written requests for an extension of the 30-day period were filed with the Chief Hearing Examiner by the Minnesota Pollution Control Agency and the Hearing Examiner. Such extension was granted in writing by the Chief Hearing Examiner.

Pursuant to Minn. Stat. § 15.0412, subd. 4 (1976), this Report shall be available for review to all affected individuals upon request for at least five days. The Minnesota Pollution Control Agency shall, if it proposes to adopt the rules as originally proposed or amended, submit the complete hearing record, including its Findings and Order to the Chief Hearing Examiner no earlier than ten days subsequent to the receipt of this Report. Such submission shall also clearly indicate any changes made to the rules as originally proposed, preferably in the format that will be submitted to the State Register for publication. The Chief Hearing Examiner shall complete his review and submit his Report to the Minnesota Pollution Control Agency on the issue of substantial changes, if any, in the proposed rules within ten calendar days after receipt of the Findings and Order of the Board of the Minnesota Pollution Control Agency. Thereafter, the Minnesota Pollution Control Agency shall be responsible for filing the rules with the Attorney General.

The Hearing Examiner, upon all records, files, evidence, arguments of counsel, and written comments filed before the close of the record, hereby makes and issues the following Findings of Fact, Conclusions and Recommendations:

PCA-78-003-WS

STATE OF MINNESOTA
OFFICE OF HEARING EXAMINERS

FOR THE POLLUTION CONTROL AGENCY

In the Matter of the Proposed Adoption of Rules Governing the Identification, Labelling, Classification, Storage, Collection, Transportation and Disposal of Hazardous Wastes and of Amendments to Minnesota Regulations SW 1, 2, 3, 4, 6 and 7.

REPORT OF HEARING EXAMINER

The above-entitled matter came duly on for hearing before William Seltzer, Hearing Examiner, on the 24th day of October, 1977, in the Board Room of the Minnesota Pollution Control Agency, 1935 West County Road B-2, Roseville, Minnesota, commencing at approximately 9:30 a.m. Said hearing was duly recessed and reconvened at various times and locations specifically set forth in "Attachment 1", attached hereto and made a part hereof.

Alan Mitchell and James Early, Special Assistant Attorneys General, appeared for and on behalf of the Minnesota Pollution Control Agency Staff (hereinafter sometimes referred to as "PCA Staff"), in support of the within considered proposed rules.

In addition to participation by the general public, appearances were duly noted for the record by the following individuals that participated in all or the majority of hearings: G. Robert Johnson and Robert S. Burk, of the firm of Popham, Haik, Schnobrich, Kaufman and Doty, Attorneys at Law, IDS Center, Minneapolis, Minnesota, for and on behalf of Ashland Oil Company, Continental and Koch Refining Company; Richard Gleason, Attorney at Law, 176 South Fifth Street, Saint Paul, Minnesota, for and on behalf of Burlington Northern, Inc.; James T. Shields, Director of Environmental Affairs, Minnesota Association of Commerce and Industry, Hanover Building, 480 Cedar Street, Saint Paul, Minnesota, for and on behalf of the Minnesota Association of Commerce and Industry; and Bradley C. Sweet, Attorney at Law, Office of General Counsel, 3M Center, Saint Paul, Minnesota, for and on behalf of Minnesota Mining and Manufacturing Company.

STATE OF MINNESOTA

COUNTY OF RAMSEY

MINNESOTA POLLUTION

CONTROL AGENCY

In the Matter of the Proposed Adoption of Regulations for Identification, Labeling, Classification, Storage, Collection, Transportation and Disposal of Hazardous Waste and of Amendments to Minnesota Regulations SW 1, 2, 3, 4, 6 and 7

NO. PCA 78-003-WS

ORDER ADOPTING RULES

The above-entitled matter came duly on for hearing before William Seltzer, Hearing Examiner, on the 24th day of October, 1977, at the Board Room of the Minnesota Pollution Control Agency (hereinafter MPCA), 1935 W. County Road B2, Roseville, Minnesota, commencing at approximately 9:30 a.m. Said hearing was duly recessed and reconvened at the following locations at the following approximate times: Room 83, State Office Building, St. Paul, Minnesota, on October 25, 1977, commencing at 9:30 a.m.; Board Room of the MPCA on October 26, 1977, commencing at 9:30 a.m.; Board Room of the MPCA on October 27, 1977, commencing at 9:30 a.m.; Board Room of the MPCA on October 28, 1977, commencing at 10:00 a.m.; Central Lecture Hall, Duluth Area Vocational Technical Institute, Duluth, Minnesota, on October 31, 1977, commencing at 9:30 a.m.; Lecture Hall of the Science and Health Building, Fergus Falls Community College, Fergus Falls, Minnesota, on November 2, 1977, commencing at 10:00 a.m.; Auditorium of the Rochester Public Library, Rochester, Minnesota, on November 4, 1977, commencing at 9:30 a.m.; Board Room of the MPCA on November 28, 1977, commencing at 10:00 a.m.; Board Room of the MPCA on November 30, 1977,

commencing at 9:30 a.m.; Board Room of the MPCA on December 5, 1977, commencing at 10:00 a.m.; Room 311, Centennial Office Building, St. Paul, Minnesota, on December 6, 1977, commencing at 10:00 a.m.; Board Room of the MPCA on December 7, 1977, commencing at 9:30 a.m.; Room 311, Centennial Office Building, St. Paul, Minnesota, on December 8, 1977, commencing at 10:00 a.m.; Board Room of the MPCA on December 9, 1977, commencing at 10:00 a.m.; Board Room of the MPCA on December 12, 1977, commencing at 9:30 a.m.; Board Room of the MPCA on December 13, 1977, commencing at 10:00 a.m.; Board Room of the MPCA on December 14, 1977, commencing at 9:00 a.m.; Board Room of the MPCA on December 15, 1977, commencing at 9:15 a.m.; Board Room of the MPCA on December 16, 1977, commencing at 9:30 a.m.; Board Room of the MPCA on January 16, 1978, commencing at 9:30 a.m.; Board Room of the MPCA on February 1, 1978, commencing at 9:30 a.m.; Board Room of the MPCA on February 2, 1978, commencing at 8.45 a.m.; Board Room of the MPCA on February 3, 1978, commencing at 9:30 a.m.; Board Room of the MPCA on February 7, 1978, commencing at 1:00 p.m.; Basement Conference Room of the MPCA on February 8, 1978, commencing at 11:00 a.m.; Basement Conference Room of the MPCA on February 9, 1978, commencing at 9:30 a.m.; Board Room of the MPCA on February 10, 1978, commencing at 9:45 a.m.; and Board Room of the MPCA on February 17, 1978, commencing at 9:45 a.m., after proper notice required by Minnesota Statutes §15.0412 (1976) was served upon all persons, associations and other interested groups registered with the Secretary of State for that purpose, and after proper publication

of the proposed rules and amendments in the September 19, 1977, State Register.

After affording all interested persons an opportunity to present written and oral data, statements, and arguments, having considered alll the testimony, having considered all evidence adduced and upon the records, files, and proceedings herein, and having confirmed the need for the above-captioned rulles and amendments:

NOW, THEREFORE, IT IS ORDERED that the hazardous waste rules, as adopted on the 25th day of July, and amended on the 29th day of August, 1978, are hereby further amended in the following respects:

1. HW 1.B.29 is amended to read:

29. Pesticides: any substance or mixture of substances intended for preventing, destroying, repelling, or mitigating any pest, and any substance or mixture of substances intended for use as a plant regulator, defoliant, or dessicant.

2. H.W.2.D.1. is amended to read:

1. ASTM D3243-76 (Appendix A).

3. A new section HW 1.D.11. is added to read:

11. United States Department of Interior inland fresh water wetland types 3, 4, and 5 (Appendix K).

4. HW 1.F. is amended to read:

F. Variances. Any person may apply for a variance from any requirement of these hazardous waste rules. Such variance shall be applied for and acted upon by the Agency in accordance with Minn. Stat. §116.07 subd. 5 and other applicable statutes and rules.

5. The last sentence in section HW 2.H.2. is amended to read:

The Agency shall hold a contested case hearing pursuant to Minnesota Statutes §§15.0418 et seq. upon request of the person producing the waste.

6. The ASTM Test Method in HW 2.E.4.b. is amended to read

(ASTM D3243-76).

7. HW 8.C.3.d. is amended to read:

d. The approximate chemical composition of the waste.

8. A new sentence is added to HW 9.B.1. to read as follows:

The Agency shall approve a county ordinance that embodies the standards and requirements set forth in these hazardous waste rules.

9. Appendix K is added to read as follows:

APPENDIX K

TYPE 3 - INLAND SHALLLOW FRESH MARSHES. The soil is usually waterlogged during the growing season; often it is covered with as much as 6 inches or more of water. Vegetation includes grasses, bulrushes, spikerushes, and various other marsh plants such as cattails, arrowheads, pickerelweed, and smartweeds. Common representatives in the North are reed, whitetop, rice cutgrass, carex, and giant burreed. In the Southeast, maidencane, sawgrass, arrowhead, and pickerelweed are characteristic. These marshes may nearly fill shallow lake basins or sloughs, or they may border deep marshes on the landward side. They are also common as seep areas on irrigated lands.

Marshes of this type are used extensively as nesting and feeding habitat in the pothole country of the North Central States and elsewhere. In combination with deep fresh marshes (Type 4), they constitute the principal production areas for waterfowl. Florida and Georgia are the only States where the majority of the shallow fresh marshes are considered to be of lesser importance to waterfowl. Florida alone contains more than 2 million acres of this type.

Flyway area:	Acres
1. Pacific north	33,700
2. Pacific south	64,100
3. Central north	817,600
4. Central south	84,600
5. Mississippi north	758,500
6. Mississippi south	15,300
7. Atlantic north	35,900
8. Atlantic south	2,159,900

TYPE 4 - INLAND DEEP FRESH MARSHES. The soil is covered with 6 inches to 3 feet or more of water during the growing season. Vegetation includes cattails, reeds, bulrushes, spikerushes, and wildrice. In open areas, pondweeds, naiads, coontail, watermilfoils, waterweeds, duckweeds, waterlilies, or spatterdocks may occur. Waterhyacinth and waterprimroses form surface mats in some localities in the Southeast. These deep-marshes may almost completely fill shallow lake basins, potholes, limestone sinks, and sloughs, or they may border open water in such depressions.

Deep fresh marshes constitute the best breeding habitat in the country, and they are also important feeding places. In the Western States they are heavily used by migrating birds, especially diving ducks. Florida and Texas are the only States in which the vast majority of these marshes are not rated as being of primary importance to waterfowl.

Flyway area:	Acres
1. Pacific north	92,500
2. Pacific south	62,500
3. Central north	686,500
4. Central south	46,800
5. Mississippi north	427,700
6. Mississippi south	21,500
7. Atlantic north	25,700
8. Atlantic south	984,100

TYPE 5 - INLAND OPEN FRESH WATER. Shallow ponds and reservoirs are included in this type. Water is usually less than 10 feet deep and is fringed by a border of emergent vegetation. Vegetation (mainly at water depths of less than 6 feet) includes pondweeds, naiads, wildcelery, coontail, watermilfoils, muskgrasses, waterlilies, spatterdocks, and (in the south) water-hyacinth.

In the pothole country of the North Central States, Type 5 areas are used extensively as brood areas when, in midsummer and late summer, the less permanent marshes begin to dry out. The borders of such areas are used for nesting throughout the Northern States. Where vegetation is plentiful, they are used in all sections of the country as feeding and resting areas by ducks, geese, and coots, especially during the migration period.

Flyway area:	Acres
1. Pacific north	40,500
2. Pacific south	51,900
3. Central north	676,800
4. Central south	87,100
5. Mississippi north	1,000,200
6. Mississippi south	186,500
7. Atlantic north	12,000
8. Atlantic south	541,500

With these further amendments to the hazardous waste rules adopted on July 25, 1978, and amended on August 29, 1978, HW 1-10 are hereby adopted this 3rd day of October, 1978, pursuant to authority vested in the Minnesota Pollution Control Agency by Minnesota States §§116.07 subds. 2, 4, and 4a and 473.823 subds. 1 and 3.

MINNESOTA POLLUTION CONTROL AGENCY

Joseph F. Grinnell
Chairman

Sandra S. Gardebring
Executive Director

Dated: October 3, 1978

HW 1 GENERAL APPLICABILITY, DEFINITIONS, ABBREVIATIONS, INCORPORATIONS, SEVERABILITY, AND VARIANCES

A. General Applicability. The provisions of these regulations govern the identification, classification, storage, labeling, transportation, treatment, processing, and disposal of hazardous waste by any person and the issuance of permits for the construction, operation, and closure of a hazardous waste facility for the protection of the environment.

B. Definitions. As used in these hazardous waste regulations the following words shall have the meanings defined herein:

1. Agency: the Minnesota Pollution Control Agency.

2. Chemical composition: any of the following:

a. A standard chemical nomenclature such as those adopted by the International Union of Pure and Applied Chemistry or the Chemical Abstracts' Service.

b. Common chemical name when it is documented to the Director that the number of isomers, related compounds of similar chemical structure and property, etc., make chemical analysis or delineation impractical.

c. Common chemical name of a mixture of components with similar properties, but not including a trade name.

3. Components of the waste: chemical elements, chemical compounds, and ions that constitute the waste and those that may form during the management of the waste from chemical reactions among the components or as biological products of microbial action.

4. Container: any packaging or containment unit, excluding portable tanks and storage tanks.

5. Corrosive material: a material that has any one of the following properties:

a. a pH that is greater than 12 or less than 3 for an aqueous material;

b. the ability to cause a visible destruction or irreversible alteration of skin tissues at the site of contact following an exposure period of four hours or less when tested by the technique described in 16 C.F.R. §1500.41 (1977);

c. a corrosion rate of 0.250 inch per year or more on Society of Automotive Engineers' 1020 Steel when tested in accordance with the minimum requirements described in the National Association of Corrosive Engineers' Standard TM-01-69, at a test temperature of 130°F (54.4°C).

6. Demolition debris: concrete, blacktop, bricks, stone facing, concrete block, stucco, glass, structural metal, and wood from demolished structures.

7. Director: the Executive Director of the Minnesota Pollution Control Agency.

8. Explosive material: a material that has the property either to evolve large volumes of gas that are dissipated in a shock wave or to heat the surrounding air so as to cause a high pressure gas that is dissipated in a shock wave. Explosive

materials include, but are not limited to, explosives as defined in 49 C.F.R. §173.50 (1976) and compressed gases as defined in 49 C.F.R. §173.300 (1976).

9. Facility operator: any person who owns, leases, operates, controls, supervises, closes, or abandons a hazardous waste facility.

10. Flammable material: any material that:

a. has a flash point below 200°F (93.3°C), except the following:

(1) a material comprised of miscible components having one or more components with a flash point of 200°F (93.3°C), or higher, that make up at least 99% of the total volume of the mixture;

(2) A material that has a flash point greater than 100°F (37.8°C) and that when heated to 200°F (93.3°C) will not support combustion beyond the flash;

(3) an explosive material;

b. may ignite without application of a flame or spark including, but not limited to, nitro cellulose, certain metal hydrides, alkali metals, some oily fabrics, some processed meals and acidic anhydrides.

c. is capable of spontaneously producing temperatures in excess of 200°F (93.3°C).

11. Flash point: the minimum temperature at which a material gives off vapor within a test vessel in sufficient concentration to form an ignitable mixture with air near the surface of the

material.

12. Floodplain: as defined in Minnesota Statutes, §104.02 subd. 3.

13. Garbage: discarded material resulting from the handling, processing, storage, preparation, serving and consumption of food.

14. Generator: a person who produces a hazardous waste within the State of Minnesota or a person who produces a hazardous waste outside the State of Minnesota that is transported to a hazardous waste facility within the State of Minnesota.

15. Groundwater: the water contained below the surface of the earth in the saturated zone including, without limitation, all waters whether under confined, unconfined or perched conditions, in near surface unconsolidated sediment or regolith, or in rock formations deeper underground. The term groundwater shall be synonymous with underground water.

16. Hazardous property: any property of a waste that requires the waste to be classified as a hazardous waste.

17. Hazardous waste: as defined in Minnesota Statutes, §116.06 subd. 13.

18. Hazardous waste facility: real or personal property that is used or is constructed to be used for the management of hazardous waste including, but not limited to the following:

a. Hazardous waste containerized storage facility: a hazardous waste facility that is designed or operated for the on-site storage of hazardous waste that is in containers, portable

tanks, or storage tanks.

b. Hazardous waste noncontainerized storage facility: a hazardous waste facility that is designed or operated for the storage of hazardous waste in lagoons, basins, ponds, vaults, or similar bulk storage other than containers or tanks.

c. Hazardous waste transfer station: a hazardous waste facility that receives wastes from one or more generators and is designed or operated for the purpose of intermediate storage of wastes prior to transportation of the waste to another hazardous waste facility.

d. Hazardous waste processing facility: a hazardous waste facility that is designed and operated to modify the chemical composition or chemical, physical, or biological properties of a hazardous waste by means such as incineration, reclamation, distillation, precipitation, or other similar processes.

e. Hazardous waste land disposal facility: a hazardous waste facility that is designed or operated for the purpose of disposing of, or storing for a period greater than one year, hazardous waste in the subsurface of the land.

f. Hazardous waste land treatment facility: a hazardous waste facility that is designed or operated for the purpose of utilizing the surface of the land as the medium by which biological, physical, or chemical processes can provide treatment of hazardous waste.

19. Hazardous waste management: the total system for the identification, storage, collection and removal of hazardous waste from public or private property, the transportation of the waste to a hazardous waste facility, and the ultimate processing or disposal of the waste by approved methods in accordance with these regulations. Any reference to hazardous waste being managed shall refer to the foregoing.

20. Incompatible wastes: wastes that when in contact with each other pose a threat to human health and safety that does not exist when they are separate, including, but not limited to, wastes that pursuant to 49 C.F.R. §177.848 (1976) cannot be stored or transported together.

21. Irritative material: a noncorrosive material which has the property to cause a local reversible injury to a biological membrane at the site of contact as determined by either of the following:

a. Practical experience with the waste where short term exposures have caused first degree burns and where long term exposure may cause second degree burns;

b. Skin irritation of an empirical score of five or more as determined pursuant to 16 C.F.R. §1500.41 (1977).

22. Leachate: a liquid that is released from, or percolated through, a waste as a result of conditions that arise during storage, land disposal, or land treatment.

23. Median lethal concentration (LC_{50}): the calculated concentration at which a material kills 50% of a group of test

animals within a specified time.

a. Aquatic LC_{50}: the LC_{50} determined by a test in which the specified time is 96 hours, the test animals are at least 10 fathead minnows, and the route of adminstration follows accepted static or flow through bioassay techniques.

b. Inhalation LC_{50}: the LC_{50} determined by a test in which the specified time is 14 days, the group of the test animals is a least ten white laboratory rats of 200 to 300 grams each, half of which are male and half of which are female, and the route of administration is continuous respiratory exposure for a period of one hour.

24. Median lethal dose (LD_{50}): the calculated dose at which a material kills 50% of a group of test animals within a specified time.

a. Oral LD_{50}: the LD_{50} determined by a test in which the specified time is 14 days, the group of test animals is at least ten white laboratory rats of 200 to 300 grams each, half of which are male and half of which are female, and the route of administration is a single oral dose.

b. Dermal LD_{50}: the LD_{50} determined by a test in which the specified time is 14 days, the group of test animals is ten or more white rabbits, half of which are male and half of which are female, and the route of administration is a 24 hour exposure with continuous contact on bare skin.

25. On-site management: the handling of a hazardous waste after generation without transporting such hazardous waste by

public thoroughfare.

26. Open burning: the burning of any matter whereby the resultant combustion products are emitted directly to the atmosphere without passing through an adequate stack, duct, or chimney.

27. Oxidative material: any material with the property to readily supply oxygen to a reaction in the absence of air. Oxidative materials include, but are not limited to, oxides, organic and inorganic peroxides, permanganates, perrhenates, chlorates, perchlorates, persulfates, nitric acid, organic and inorganic nitrates, iodates, periodates, bromates, perselenates, perbromates, chromates, dichromates, ozone, and perborates. Bromine, chlorine, fluorine, and iodine react similarly to oxygen under some conditions and are therefore also oxidative materials.

28. Person: as defined in Minnesota Statutes §116.06 subd. 8.

29. Pesticide: a material that is labeled, represented, or intended for use as an economic poison in accordance with the Federal Insecticide, Fungicide, and Rodenticide Act. (7 U.S.C.A. §136-§136y (1977).)

30. Petroleum waste: an oily waste generated by petroleum storage, petroleum refining and petroleum refinery products storage.

31. Resource recovery: as defined in Minnesota Statutes, §473.121 subd. 31c.

32. Routine waste management: the total system for the handling of a waste by one of the following methods:

a. Storage, collection, and removal of waste from public or private property, its transportation to intermediate or final disposal facilities, and its ultimate disposal at a sanitary landfill permitted by the Agency.

b. Discharge into a sewer system and subsequent treatment at a wastewater treatment works operated pursuant to a National Pollutant Discharge Elimination System Permit or State Disposal Permit.

c. Discharge into the atmosphere as an air contaminant or emission emitted pursuant to an Emission Facility Operating Permit.

d. A wastewater discharge pursuant to a National Pollutant Discharge Elimination System Permit or a State Disposal System Permit.

33. Rubbish: discarded paper, cardboard, scrap metal, yard clippings, crop residues, brush, wood, glass, bedding, crockery or litter.

34. Sanitary landfill: a land disposal site employing an engineered method of disposing of solid waste on land in a manner that minimizes environmental hazards by spreading the solid waste in thin layers, compacting the solid waste to the smallest practical volume, and applying cover material at the end of each operating day, or at intervals as may be required by the Agency.

35. Saturated zone: that part of the earth's crust in which all the voids, large and small, are ideally filled with water under pressure greater than atmospheric.

36. Sewage: as defined in Minnesota Statutes §115.01 subd. 2.

37. Sewer system: as defined in Minnesota Statutes §115.01 subd. 6.

38. Shoreland: as defined in Minnesota Statutes §105.485 subd. 2.

39. Tank: any packaging or containment unit having a capacity of 100 gallons or greater that is used to confine and hold a material. Tanks that are anchored, fixed, or attached to one location are storage tanks, and those that are not are portable tanks.

40. Toxic material: a material with any one of the following properties:

a. An oral LD_{50} less than 500 milligrams of material per kilogram of body weight of test animal.

b. A dermal LD_{50} less than 1000 milligrams of material per kilogram of body weight of test animal.

c. An inhalation LC_{50} (when the material or a component is in a form that may be inhaled) less than:

(1) 2000 milligrams of material as dust or mist per cubic meter of air, or

(2) 1000 parts per million of material as gas or vapor.

d. An aquatic LC_{50} less than 100 milligrams of material per liter of water.

41. Waste: any discarded material including, but not limited to solids, semisolids, sludges, liquids, gases, and their vapors, mists, or dusts.

42. Waters of the State: as defined in Minnesota Statutes §115.01 subd. 9.

43. Water table: the surface of the ground water at which the pressure is atmospheric. Generally this is the top of the saturated zone.

44. Wetland: A natural marsh where water stands near, at or above the soil surface during a significant portion of most years, and which is eligible for classification as an inland fresh water wetland type 3, 4 or 5 under U.S. Department of Interior classifications.

C. Abbreviations. The abbreviations used in these hazardous waste regulations have the following meanings:

1. A.S.T.M.: American Society for Testing and Materials.
2. C.F.R.: Code of Federal Regulations.
3. LC_{50}: median lethal concentration.
4. LD_{50}: median lethal dose.
5. NPDES: National Pollutant Discharge Elimination System.

D. Incorporations. The following are contained in the indicated appendices at the end of this regulation and are hereby incorporated and made a part of these regulations and shall apply as indicated within these regulations:

1. ASTM D3243-73 (Appendix A).

2. ASTM D56-70 (Appendix B).

3. ASTM D3278-73 (Appendix C).

4. ASTM D93-73 (Appendix D).

5. ASTM D2487-69 (Appendix E).

6. ASTM D2488-69 (Appendix F).

7. National Association of Corrosion Engineers' Standard TM-01-69 (Appendix G).

8. 10 C.F.R. §20.301 (1977) (Appendix H).

9. 16 C.F.R. §1500.41 (1977) (Appendix I).

10. 49 C.F.R. §§173.50, 173.300, 177.824 and 177.848 (1976) (Appendix J).

E. Severability. If any provision of these regulations or the application thereof to any person or circumstance is held to be invalid, such invalidity shall not affect other provisions of these regulations that can be given effect without the invalid provision or application. To this end, the provision of all regulations and the various applications thereof are declared to be severable.

F. Variances. The Agency may grant a variance pursuant to Minnesota Regulations MPCA 6 from any requirement in these hazardous waste regulations in order to avoid undue hardship and promote the effective and reasonable application and enforcement of these regulations. The Agency may prescribe such conditions and time limitations in a variance as it deems necessary for prevention, control, and abatement of pollution

in harmony with local, state, and federal law.

G. Other Standards. Nothing in these hazardous waste regulations shall relieve any person from any obligations or duties imposed by any other laws, statutes, regulations, standards, or ordinances of the federal, state or local governments or any agency thereof now in effect or which become effective in the future. In the event these hazardous waste regulations conflict with any such laws, statutes, regulations, standards, or ordinances, the more stringent shall apply. Nothing in these regulations shall be construed to require any person to comply with any portion of these regulations if that portion should at any time be preempted by federal law.

HW 2 CLASSIFICATION, EVALUATION, AND CERTIFICATION OF WASTE

A. Applicability. This regulation establishes the criteria for determining whether a waste is a hazardous waste.

B. Hazardous Wastes. The following wastes are hazardous wastes:

1. A waste that contains a component specified in List 1 is a hazardous waste if the concentration of that component in the waste exceeds the concentration listed.

List 1

Component	Concentration (ppm)
2-Acetylaminofluorene (2-AAF)	1000
4-Aminodiphenyl (4-ADP)	100
Arsenic and its Compounds	500
Benzene	100
Benzidine	100
Beryllium and its Compounds	20
Cadmium and its Compounds	500
Carbon Tetrachloride	100
Chloroform	100
bis-(Chloromethyl) ether (BCME)	100
Chloromethyl methyl ether (CMME)	100
Chromium and its Compounds (VI)	1000
3,3'-Dichlorobenzidine (DCB)	1000
4-Dimethylaminoazobenzene (DAB)	1000
Ethyleneimine (EI)	1000
Lead and its Compounds	600

4,4-Methylene-bis-2-Chloroaniline (MOCA)	100
α-Naphthylamine (1-NA)	1000
β-Naphthylamine (2-NA)	100
Nickel and its Compounds	10,000
4-Nitrobiphenyl (4-NBP)	100
n-Nitrosodimethylamine (DMN)	1000
Polychlorinated biphenyl (PCB)	500
β-Propiolactone (BPL)	1000
Vinyl Chloride (VCM)	100

2. A waste which contains a component specified in List 2 is a hazardous waste unless leachate from that waste does not contain that component at a concentration in excess of that specified in List 2.

List 2

Component	Concentration (ppm)
Aldrin	0.03
Arsenic and its Compounds	5.0
Cadmium and its Compounds	1.0
Chlordane	0.1
Chromium and its Compounds	5.0
DDT	0.01
Endrin	0.02
Heptachlor	0.01
Lead and its Compounds	3.0
Mercury and its Compounds	0.2
Methoxychlor	0.3

Mirex	0.01
Polychlorinated biphenyl (PCB)	0.01
Toxaphene	0.05

3. Any of the following wastes:

   a. An explosive material.

   b. A flammable material.

   c. An irritative material.

   d. A corrosive material.

   e. An oxidative material.

   f. A toxic material.

   g. Used crankcase oil.

   h. Petroleum waste.

4. A waste that is a mixture of small amounts of unrelated chemicals such that the description of any sample or set of samples is not representative of the total waste. Examples are discarded chemicals from a chemistry laboratory, wastes from pilot plant chemical reactions, and discarded prescription drugs.

5. Any other waste that is not a hazardous waste under any provision in HW 2 B.1. - 4., but that the Agency determines pursuant to HW 2 H.2. cannot be handled by routine waste management techniques because it poses a substantial present or potential hazard to human health or other living organisms.

C. Exempt Wastes. The following wastes may be stored, labeled, transported, treated, processed, and disposed of without complying with the requirements of these regulations:

1. Normal refuse from households.

2. Sewage.

3. Garbage, rubbish and demolition debris from nonhousehold sources.

4. Asbestos in taconite wastes.

5. Septic tank sludge from households.

6. An air contaminant or emission emitted pursuant to an Emission Facility Operating Permit.

7. Any composite wastewater that is formed in a sewer system by the combination of two or more individual wastes that have been discharged into the sewer system. This exemption does not include any of the individual wastes which form the composite wastewater.

8. Wastes discharged pursuant to an NPDES Permit or a State Disposal System Permit.

9. Municipal sewage sludge.

10. Radioactive waste that is produced pursuant to a permit issued under 10 C.F.R. Parts 30, 40 and 70 (1976) and that is disposed of in compliance with 10 C.F.R. §20.301 (1976).

11. A waste pesticide that is not in List 1 or List 2 or an unrinsed pesticide container that contained a pesticide that is not in List 1 or List 2.

12. The Director shall exempt wastes resulting from spills from all or any provision of these regulations if the exemption is necessary to expedite the proper management of the spilled material and to prevent, abate or control pollution.

D. Evaluation of Wastes.

1. Any person who produces any waste within the State of Minnesota or any person who produces a waste outside the State of Minnesota that is managed within the State of Minnesota, and which waste is not an exempt waste under subsection C, shall evaluate the waste to determine if it is hazardous. The person evaluating the waste shall compare the properties of the waste with the criteria for a hazardous waste in subsection B and determine whether the waste is hazardous, in accordance with the procedures set forth in this regulation.

2. The person shall reevaluate the waste whenever the person has reason to believe that the composition of the waste is altered so that the results of the previous evaluation are no longer representative of the waste.

3. This evaluation shall be of the individual waste prior to any mingling or combining with other wastes. If wastes are subsequently mingled or combined, except for wastes that are mingled or combined in a sewer system, the generator shall also evaluate the waste resulting from the mingling or combining.

4. A person who produces two or more wastes that are similar or are from similar processes such that one waste is representative of the other wastes may use one evaluation for all such wastes.

E. Comparison of Properties.

1. General. Any person evaluating a waste shall obtain such data as are necessary to determine whether the waste has any hazardous properties at any time during its management. The data

may be obtained from the literature, from experience with the waste, or from other sources, but if data is not available, then actual tests of a sample of the waste shall be conducted.

2. List 1 and List 2 Components. Whenever the person evaluating a waste knows or suspects that any of the components in List 1 or List 2 is in the waste, the person shall conduct a quantitative analysis to determine the concentration of each component in List 1 that is known or suspected to be in the waste and a leachate test for each component in List 2 that is known or suspected to be in the waste.

3. Other Hazardous Properties.

a. A person evaluating a waste shall determine whether the waste has any of the properties of an explosive material, a flammable material, an irritative material, a corrosive material, an oxidative material, and a toxic material. However, once the person determines that a waste has one of the properties of one of the classes of hazardous wastes described above, the person need not determine whether it has any of the other properties of the same class. For example, if a waste is a hazardous waste because of its oral LD_{50}, the dermal LD_{50} need not be determined, but the waste must be evaluated to determine whether it is also explosive, flammable, irritative, corrosive, or oxidative.

b. Generators of wastes comprised of small amounts of unrelated chemicals such that a description of any sample or set of samples is not representative of the total waste, generators of petroleum waste, and generators of used crankcase oil need not

STATE OF MINNESOTA

COUNTY OF RAMSEY

MINNESOTA POLLUTION

CONTROL AGENCY

In the Matter of the Proposed Adoption of Regulations for Identification, Labeling, Classification, Storage, Collection, Transportation and Disposal of Hazardous Waste and of Amendments to Minnesota Regulations SW 1, 2, 3, 4, 6 and 7

NO. PCA 78-003-WS

ORDER ADOPTING RULES

The above-entitled matter came duly on for hearing before William Seltzer, Hearing Examiner, on the 24th day of October, 1977, at the Board Room of the Minnesota Pollution Control Agency (hereinafter MPCA), 1935 W. County Road B2, Roseville, Minnesota, commencing at approximately 9:30 a.m. Said hearing was duly recessed and reconvened at the following locations at the following approximate times: Room 83, State Office Building, St. Paul, Minnesota, on October 25, 1977, commencing at 9:30 a.m.; Board Room of the MPCA on October 26, 1977, commencing at 9:30 a.m.; Board Room of the MPCA on October 27, 1977, commencing at 9:30 a.m.; Board Room of the MPCA on October 28, 1977, commencing at 10:00 a.m.; Central Lecture Hall, Duluth Area Vocational Technical Institute, Duluth, Minnesota, on October 31, 1977, commencing at 9:30 a.m.; Lecture Hall of the Science and Health Building, Fergus Falls Community College, Fergus Falls, Minnesota, on November 2, 1977, commencing at 10:00 a.m.; Auditorium of the Rochester Public Library, Rochester, Minnesota, on November 4, 1977, commencing at 9:30 a.m.; Board Room of the MPCA on November 28, 1977, commencing at 10:00 a.m.; Board Room of the MPCA on November 30, 1977,

commencing at 9:30 a.m.; Board Room of the MPCA on December 5, 1977, commencing at 10:00 a.m.; Room 311, Centennial Office Building, St. Paul, Minnesota, on December 6, 1977, commencing at 10:00 a.m.; Board Room of the MPCA on December 7, 1977, commencing at 9:30 a.m.; Room 311, Centennial Office Building, St. Paul, Minnesota, on December 8, 1977, commencing at 10:00 a.m.; Board Room of the MPCA on December 9, 1977, commencing at 10:00 a.m.; Board Room of the MPCA on December 12, 1977, commencing at 9:30 a.m.; Board Room of the MPCA on December 13, 1977, commencing at 10:00 a.m.; Board Room of the MPCA on December 14, 1977, commencing at 9:00 a.m.; Board Room of the MPCA on December 15, 1977, commencing at 9:15 a.m.; Board Room of the MPCA on December 16, 1977, commencing at 9:30 a.m.; Board Room of the MPCA on January 16, 1978, commencing at 9:30 a.m.; Board Room of the MPCA on February 1, 1978, commencing at 9:30 a.m.; Board Room of the MPCA on February 2, 1978, commencing at 8.45 a.m.; Board Room of the MPCA on February 3, 1978, commencing at 9:30 a.m.; Board Room of the MPCA on February 7, 1978, commencing at 1:00 p.m.; Basement Conference Room of the MPCA on February 8, 1978, commencing at 11:00 a.m.; Basement Conference Room of the MPCA on February 9, 1978, commencing at 9:30 a.m.; Board Room of the MPCA on February 10, 1978, commencing at 9:45 a.m.; and Board Room of the MPCA on February 17, 1978, commencing at 9:45 a.m., after proper notice required by Minnesota Statutes §15.0412 (1976) was served upon all persons, associations and other interested groups registered with the Secretary of State for that purpose, and after proper publication

of the proposed rules and amendments in the September 19, 1977, State Register.

After affording all interested persons an opportunity to present written and oral data, statements, and arguments, having considered all the testimony, having considered all evidence adduced and upon the records, files, and proceedings herein, and having confirmed the need for the above-captioned rules and amendments:

NOW, THEREFORE, IT IS ORDERED that the hazardous waste regulations, HW 1-10, and the amendments to the solid waste regulations, SW 1, 2, 3, 4, 6 and 7, are hereby adopted this 25th day of July, 1978, in the form attached to this Order, pursuant to authority vested in the Minnesota Pollution Control Agency by Minnesota Statutes §116.07 subds. 2, 4, and 4a and 473 subds. 1 and 3 (1976)

MINNESOTA POLLUTION CONTROL AGENCY

Joseph F. Grinnell
Chairman

Sandra S. Gardebring
Executive Director

Dated: July 25, 1978

2. Hazardous Waste Noncontainerized Storage Facilities, Hazardous Waste Land Treatment Facilities, and Hazardous Waste Land Disposal Facilities. In addition to the information required by subparagraph 1 of this section, any person who submits a final application for a Hazardous Waste Facility Permit for a Hazardous Waste Noncontainerized Storage Facility, Hazardous Waste Land Treatment Facility, or a Hazardous Waste Land Disposal Facility, shall submit the following additional information:

a. A report on the subsurface conditions at the proposed facility. The report shall review the results of continued monitoring of groundwater conditions and supplement the information developed in the preliminary application. The report shall review the subsurface facility construction, including the following:

(1) Cross sections that illustrate the design of the facility in relationship to soil profiles, bedrock profiles, groundwater contours, and other geological features and that delineate the proposed location of lysimeters and groundwater monitoring wells relative to vertical and horizontal groundwater flows.

(2) A section that describes the water balance of the facility and its impact on the existing water balance and quality in the site area, and that contains, when deemed necessary by the Director, a plot plan that delineates how the groundwater contours will be affected by development of the facility.

(3) A section that reviews the effect of contaminants should a failure in the engineering design or construction occur.

The section shall include an assessment of the ability of contaminants to pass through underlying soils, a description of the potential effect on the groundwater quality, and recommendations for remedial action should it be necessary.

b. A report that provides a detailed assessment of the specifications and design for liners, leachate collection systems, and leachate treatment systems.

c. A report on air and groundwater monitoring systems and other equipment that will be installed at the proposed facility and on the proposed monitoring procedures. The report shall include the location of monitoring wells and air monitoring stations, plans and specifications for the construction of the monitoring wells in accordance with requirements of the Minnesota Department of Health, plans and specifications for the construction of air monitoring stations, the procedures for sampling, the frequency of sampling, and the kind of analyses to be performed.

d. A closure report and plot plan that delineates the finished construction of the facility after closure. The report and plan shall include the following:

(1) A site plot plan of the proposed final conditions at the facility. The plot plan shall have a scale and vertical countour interval acceptable to the Director and shall include:

(a) Original contours.

(b) Proposed final contours.

(c) Original surface water drainage patterns.

(d) Proposed final surface water drainage patterns.

(e) Layout of the leachate collection system.

(f) Layout of gas vents, gas migration barriers, and other such gas controls.

(g) Access roads.

(h) Finished landscaping.

(2) Cross sections that delineate each finished cell and cross sections that delineate the disposal or storage of each major waste type. The cross sections shall depict liners, leachate collection systems, the waste, cover materials, and other applicable details.

(3) A section that provides specifications for any construction or materials to be used in closing the facility.

e. A report on the long term maintenance, monitoring and surveillance to be performed at the facility. For a Hazardous Waste Land Disposal Facility, the report shall include all of the following information. For a Hazardous Waste Noncontainerized Storage Facility and a Hazardous Waste Land Treatment Facility, the report shall include any of the following information that is applicable:

(1) A discussion of the long term maintenance of liners, cover material, leachate collection systems, gas controls, and other applicable construction after closure.

(2) A discussion of the operation of the leachate collection and treatment systems, gas controls, and runoff retention basins after closure.

(3) A discussion of the continued sampling and analysis of monitoring wells, leachate collection systems, emitted gases, and surface water runoff after closure.

(4) A discussion of the techniques for removal of chemical wastes from cells in case the waste poses a threat or has created a threat to air, land, or water resources of the state, or to public health or safety, after closure, regardless of the cause of that threat.

(5) A financial plan that indicates how the applicant will provide funds for maintenance, monitoring, and surveillance of the facility for thirty (30) years after closure, unless the Agency determines that a shorter period of time is adequate.

D. Waiver. Any person who submits a preliminary application or final application to the Agency for a Hazardous Waste Facility Permit shall not be required to submit that information which the Director informs the person in writing is not pertinent to a particular application.

Agency's consideration of a Hazardous Waste Facility Permit for the same facility under these regulations.

2. A county shall submit to the Director, upon request, a copy of any disclosure that has been submitted to the county.

3. A county shall submit to the Agency a yearly summary of hazardous waste management in the county. The yearly summary shall be submitted by March 1 for the year that ended on the previous December 31. The summary shall contain:

a. The name and identification numbers assigned by the county to each generator in the county.

b. The total number of hazardous waste shipments.

c. The total quantities shipped for each type of hazardous waste.

d. The identification numbers pursuant to HW 5 G. and names of the transporters used.

e. Facilities at which the waste was stored, processed, or disposed.

f. Number of spills and accidents.

g. Any other information requested by the Director.

HW 10 SPILLAGES AND LEAKAGES OF HAZARDOUS WASTE

A. Duty to report. Any person who owns, has possession of, or otherwise has control of a hazardous waste that spills, leaks, or otherwise escapes from a container, vehicle tank, storage tank, portable tank, or other containment system, including its associated piping, shall immediately notify the Agency if the hazardous waste may cause pollution of the air, land, or waters of the State. The person shall use, when applicable, the Agency's 24 hour telephone notification service.

B. Duty to Recover. Any person who owns, has possession of, or otherwise has control of a hazardous waste that spills, leaks, or otherwise escapes from a container, vehicle tank, storage tank, portable tank, or other containment system, including its associated piping, shall recover the hazardous waste as rapidly and as thoroughly as possible and shall immediately take such other action as may be reasonably possible to protect human life and health and minimize or abate pollution of the water, air or land resources of the state caused thereby.

C. Open Burning. No person shall undertake open burning of such hazardous waste unless the open burning has been approved in writing by the Director. The Director may approve open burning of the following substances:

1. Distilled petroleum products.

2. Crude oil, if it is not possible to recover the crude oil.

The Director shall consider the location of such hazardous waste and the wind conditions and may approve such open burning only if there will be no adverse effect on residential areas or on traffic conditions.

that would allow the generator of a hazardous waste to put a waste code number rather than the approximate chemical composition of the waste on the shipping papers after the Agency had assigned a number when the disclosure on the waste was filed. The Chief Hearing Examiner concluded that the need for and reasonableness of this change had not been demonstrated because he was "unable to find anything in the record even mentioning a 'waste code number.'" Finding 7 at page 4 of the Chief Hearing Examiner's Report.

During the course of the hearing the Agency attempted to gather regulations of other states regarding hazardous waste management. Introduced into the record were the Texas Water Quality Board Industrial Waste Shipping-Control Ticket, PCA Exhibit 39, and a document entitled "Shipping Control of Industrial Waste in Texas," PCA Exhibit 56. The Texas Shipping-Control Ticket contains as its first piece of information about an industrial waste, a waste code number. See PCA Exhibit 39 and PCA Exhibit 56 at pages 6-8. Texas found that:

> This scheme [waste code number] did not require the presumptive action of establishing waste categories or groups, was easily expandable, and provided an extensive capability for data retrieval. The waste code file could be built as the system was implemented, thereby avoiding possible delays. Also, a high degree of consistency in waste classification and coding could be achieved by assigning codes at the agency's central office.

Id. at page 8. In addition, the Metropolitan Inter-County Council testified that information from the shipping papers would be processed through a computerized information system. Tr. at 3161. These are all good reasons in the record for establishing a waste code numbering system as the information comes in. 4/

4/ The Chief Hearing Examiner's inability to find anything in the record even mentioning a waste code number is an example of the necessity of Minn. Reg. Atty. Gen. 305(c) providing for the submission of briefs to the Attorney General by those most familiar with the record.

The Chief Hearing Examiner expressed the concern that a person at the scene of a spill might not know how to respond if the chemical composition were replaced by a waste control number. See Finding 7 at page 4 of Chief Hearing Examiner's Report. This view fails to recognize that the shipping papers must contain instructions for handling an emergency spill. See HW 8.C.3.j. The person on the scene will take the first remedial steps on the basis of these instructions, not on the basis of a long list of chemical compounds. Also, the hazardous properties of the waste must be identified, see HW 8.C.3.e., and this information will also be relied on in reacting initially to the spill. For long range cleanup efforts, the person on the scene will call the generator and the Minnesota Pollution Control Agency, whose telephone numbers will be listed on the shipping papers. See HW 8.C.3.g. With computer assistance based on the waste code number, and with help from the generator and pollution control experts, the spill can be quickly and properly handled.

In addition to not endangering cleanup of spills, elimination of the chemical composition requirement, which could be quite lengthy for some chemical wastes, provides for a shorter, neater shipping paper, which was a matter of concern to several who testified at the hearing. See, e.g., Tr. at 2659-2676, 3184, 3191-3192, and 3203. The use of a waste code number, with the help of the computer, reduces the size of the shipping papers without reducing the effectiveness of the shipping papers, as elimination of some of the other information in HW 8.C.3. might do.

The Agency submits that the shipping paper format required by these rules provides a concise, reasonable, workable document. The Agency believes that the Chief Hearing Examiner is incorrect in rejecting the waste code number as not being supported by the record.

HW 8.E.6. merely provides that, if a county ordinance is approved pursuant to HW 9., those who handle a hazardous waste generated within that county or transported to a facility in that county shall sign and submit shipping papers as required by the ordinance. The Chief Hearing Examiner found that this innocuous provision must be withdrawn or renoticed by the Agency because it "assumes" that a county ordinance approved by the Agency would require shipping papers and "nowhere is there a rule which requires it." Finding 7 at page 4 of the Chief Hearing Examiner's Report.

Minn. Stat. §473.811 subd. 5 (1976), which requires each metropolitan county to adopt a hazardous waste ordinance, also provides that "[a]ny ordinance enacted under this subdivision shall embody regulations, standards, and requirements adopted by the [pollution control] agency." Minn. Stat. §400.161 (1976) imposes the same obligation on out-state counties who adopt hazardous waste ordinances. The Agency's reading of these statutes, and the counties' reading also, see Testimony of Metropolitan Inter-County Council, Tr. at 3159-3161, is that each county ordinance will be required to contain a requirement for handling shipping papers. Therefore, if a county ordinance is approved by the Agency, the ordinance will have a shipping paper requirement in it.

That is not to say, however, that each county will administratively handle shipping papers in the same manner as every other county, and that is the reason for HW 8.E.6. As the staff explained to the Agency Board in its memorandum:

> The staff also supports the addition of a new HW 8.E.6 to allow those in the hazardous waste management chain to handle shipping papers in accordance with applicable county ordinances. This change is recommended so that the counties may elect to require the handling of shipping papers in a slightly different manner than that required by the Agency. Specifically, the metropolitan counties may elect to not require intermediate transporters or transfer station operators to return a copy of the shipping papers to the generator, as is presently required by HW 8.E.1. This program is acceptable to the staff because the metropolitan counties have made significant progress in developing adequate management programs. . . .

approved in writing by the Agency:

1. Each generator who produces a hazardous waste within the county shall not be required to submit a disclosure to the Agency for that waste unless specifically requested in writing by the Director to do so.

2. Each generator shall submit the required copies of the hazardous waste shipping papers to the county as required by the county ordinance for each shipment of hazardous waste that is transported.

3. All persons shall comply with all other requirements of these regulations and all requirements of the county ordinance.

D. Duties of Counties.

1. A county shall submit to the Agency written notification of all hazardous waste generator licenses or permits approved or reviewed by the county during the previous month. The notification shall be submitted to the Agency on the fifteenth day of each month. Upon the request of the Director, the county shall provide the Agency with a copy of all the information that it considered in reaching its decision. The Agency shall place the matter on the agenda of the next regularly scheduled meeting of the Agency, which will be on the fourth Tuesday of the month. The Agency may amend, modify, suspend, or reverse the action of the county. The action of the Agency in reviewing the county decision to grant the license or permit shall not affect the

HW 8 HAZARDOUS WASTE SHIPPING PAPERS

A. Applicability. This regulation establishes requirements for the preparation of hazardous waste shipping papers by generators. This regulation also establishes requirements for the handling, signing and submission of hazardous waste shipping papers by generators, transporters, and facility operators.

B. Hazardous Waste Shipping Papers Required. No person shall release, transport, or accept a hazardous waste that is not accompanied by hazardous waste shipping papers.

C. Preparation of Hazardous Waste Shipping Papers.

1. Each generator shall prepare hazardous waste shipping papers for each shipment of hazardous waste.

2. The generator shall prepare an original and a sufficient number of copies of the hazardous waste shipping papers so that all persons who are going to participate in the management of the hazardous waste will be able to comply with the provisions of this regulation.

3. The hazardous waste shipping papers shall include the following information.

a. The names and addresses of the generator, transporters, and hazardous waste facilities to which the hazardous waste is to be transported.

b. An identifying shipment number.

c. The amount of hazardous waste being transported.

d. The approximate chemical composition of the waste, or the waste code number if one has been designated by the Director.

The Director may designate a waste code number for a waste that the generator has disclosed to the Agency.

e. The hazardous properties of the waste.

f. The dates during which the hazardous waste was produced.

g. The names and telephone numbers of persons and agencies to notify or consult with in case of spillage during handling or transportation.

h. The transporters' Agency identification numbers.

i. The names of other generators whose hazardous wastes are to be commingled with the generator's shipment of hazardous waste.

j. Procedures for handling spills, fires, and other emergencies.

k. The signature of the generator.

l. Any other information the generator deems important.

4. The hazardous waste shipping papers shall include a place for the signature of each transporter and facility operator who accepts possession of the shipment of hazardous waste and a place for the signature of the facility operator who is responsible for ultimate disposition of the hazardous waste.

D. Preparation of Supplemental Cover Sheet. Each transporter or facility operator who commingles or consolidates more than one shipment of hazardous waste shall prepare a supplemental cover sheet. The supplemental cover sheet shall provide procedures for handling spills, fires, and other emergencies

and shall accompany the hazardous waste shipping papers for each individual shipment of hazardous waste until ultimate disposition.

E. Signing and Submission of Hazardous Waste Shipping Papers.

1. Each generator, transporter, and facility operator who relinquishes possession of a shipment of hazardous waste shall obtain the signature of the transporter or facility operator who accepts the shipment of hazardous waste on the original and each copy of the hazardous waste shipping papers. The generator shall retain one copy of the hazardous waste shipping papers. The transporter or facility operator shall obtain two copies of the hazardous waste shipping papers and, within two days after relinquishing possession, return one copy to the generator.

2. Each transporter or facility operator who accepts a shipment of hazardous waste shall sign the hazardous waste shipping papers.

3. The facility operator of a Hazardous Waste Processing Facility, a Hazardous Waste Land Disposal Facility, or a Hazardous Waste Land Treatment Facility shall sign the hazardous waste shipping papers a second time upon ultimate disposition of the hazardous waste and return the original to the generator within two days of ultimate disposition.

4. The generator of a shipment of hazardous waste shall maintain the original of the hazardous waste shipping papers for a period of five years after it is returned. Each transporter and facility operator who accepted the shipment of hazardous waste

shall maintain a copy of the hazardous waste shipping papers for a period of five years after accepting the hazardous waste.

5. Upon the request of the Director any generator, transporter, or facility operator shall submit the original or a copy of hazardous waste shipping papers to the Agency at the time and in the manner specified by the Director. If the request requires the generator to inform all transporters and facility operators managing the hazardous waste of the request, the generator shall so inform the transporters and facility operators, and the generator, transporters and facility operators shall comply with the Director's request.

6. In the event that a county ordinance is approved pursuant to HW 9, the generator, transporter, and facility operator of a waste generated within that county or transported to a hazardous waste facility within that county shall sign and submit hazardous waste shipping papers as required by that ordinance.

F. Exemptions.

1. A generator who manages the hazardous waste at an on-site Hazardous Waste Processing Facility, Hazardous Waste Land Disposal Facility, or Hazardous Waste Land Treatment Facility is not required to comply with the requirements of this regulation with respect to those wastes on-site.

2. Generators and transporters of used crankcase oil are not required to have hazardous waste shipping papers accompnay the used crankcase oil that they generate or transport unless the used crankcase oil has been mixed with other wastes.

3. Persons who release or accept hazardous waste that is discharged directly to a sewer system operated pursuant to an NPDES permit or State Disposal System Permit are exempted from the requirements of this regulation with respect to such a discharge.

G. Mailing Shipping Papers. Any generator in Minnesota who ships his hazardous waste to a hazardous waste facility outside the State of Minnesota or any generator outside the State of Minnesota who ships his hazardous waste to a hazardous waste facility in Minnesota shall mail the required copies of the shipping papers to the hazardous waste facility if both of the following conditions are present:

1. A transporter that neither originates nor terminates a shipment in the State of Minnesota refuses to sign and carry the shipping papers, and

2. There is neither a federal law nor a state law of the state in which the shipping papers were proffered that requires the transporter to sign and carry similar shipping papers.

When the facility operator receives the shipment of hazardous waste, he shall then treat the shipping papers in the same manner as if they had physically arrived with the shipment of hazardous waste. In addition, the generator shall provide all persons who will be transporting the waste within the State of Minnesota with appropriate written information on the procedures for handling spills, fires and other emergencies.

H. Hazardous Waste Shipping Paper Format. Nothing in this regulation shall be construed to require the shipping paper to be a document that is separate from and in addition to other documents already being utilized for the transportation of hazardous wastes. A generator may use a bill of lading or any other such document to fulfill the requirements of this regulation so long as it contains all the required information and is handled as required by this regulation. The information shall, however, be in a format that will make it amenable to computerized data processing and that has been approved by the Agency.

I. Certified Bill of Lading. Any generator that gives a bill of lading to a transporter shall, prior to the execution of the bill of lading, determine whether the facility operator can and will accept the shipment of hazardous waste and whether the facility, if within Minnesota, has a Hazardous Waste Facility Permit. The generator shall certify on the bill of lading that the facility operator can and will accept the shipment of hazardous waste and that the facility has a Hazardous Waste Facility Permit.

HW 9 COUNTY REGULATION OF HAZARDOUS WASTE MANAGEMENT

A. Applicability. This regulation establishes procedures for submission of documents in the event the county ordinance is approved by the Agency. Issuing, denying, modifying, imposing conditions upon, or revoking hazardous waste generator licences or permits, and county hazardous waste regulations, shall be subject to review, denial, suspension, and reversal by the Agency.

B. Review of County Ordinances.

1. A county that seeks Agency approval of a hazardous waste ordinance shall submit a copy of the ordinance to the Agency. The Agency shall advise the county in writing whether the ordinance is approved.

2. If a metropolitan county submits a county hazardous waste ordinance to the Agency for approval pursuant to Minn. Stat. §473.811, subd. 5, the procedure established in subparagraph 1 of paragraph D for Agency review of county hazardous waste licenses and permits shall be followed. Any action by the Agency pursuant to such submission for Agency review of the county ordinance shall not be deemed to be Agency approval of such ordinance unless such approval is explicit and is in writing.

3. For the purposes of this regulation a metropolitan county is any one of the following counties: Anoka, Carver, Dakota, Hennepin, Ramsey, Scott, and Washington.

C. Effect of Agency Approval of County Ordinance. In the event that a county has adopted a hazardous waste ordinance that is

Staff Memorandum in Support of Proposed Findings of Fact and Conclusions (July 7, 1978) at 25-26. The Chief Hearing Examiner's conclusions with respect to inadequate record support for HW 8.E.6. are not warranted.

The final change rejected by the Chief Hearing Examiner, HW 9.D.1., modified a requirement that counties report "all actions" relating to hazardous waste licenses and permits to the Agency, a provision which the Metropolitan Inter-County Council understandably criticized during the public hearings as unreasonably broad. See Tr. at 3185-88.

As originally proposed, HW 9.A. spoke broadly of the Agency's power to review "county actions pertaining to hazardous waste management." The Metropolitan Inter-County Council correctly noted that the enabling legislation did not structure the Agency's review power so broadly. Minn. Stat. §473.811 subd. 5 (1976) provides, in relevant part, that:

> Issuing, denying, modifying, imposing conditions upon, or revoking hazardous waste permits or licenses, and county hazardous waste regualtions, shall be subject to review, denial, suspension, and reversal by the Agency.

See also Minn. Stat. §400.161 (1976). Accordingly, HW 9.A. was amended to use the statutory language cited above. To be consistent with this change, HW 9.D.1., which had similarly spoken broadly of "all county actions" was also changed to reflect those county actions which are properly subject to Agency review pursuant to Minn. Stat. §§473.811 subd. 5 and 400.161 (1976).

The Agency's reasoning was further explained in the Staff memorandum:

> In HW 9.C.1 the language is changed to clarify that it is county actions relating to decision on permits that are reviewable by the Agency. Other county decisions in the hazardous waste management area, like collection of fees, are not reviewable by the Agency. These changes are consistent with Minn. Stat. §§473.811 subd. 5 and 400.161 (1976) . . . .

Staff Memorandum in Support of Findings of Fact and Conclusions (July 7, 1978) at 26.

III. NONE OF THE CHANGES IN THE RULES IS A SUBSTANTIAL CHANGE THAT REQUIRES ANOTHER HEARING

A. Not All Changes in Proposed Rules Are Substantial Changes

One purpose of a rulemaking hearing is to determine whether changes in the proposed rules are warranted. An agency is entitled, indeed often required, to make changes in the rules in accordance with evidence in the record. The Hearing Examiner specifically recognized this:

> One of the principal benefits of a public hearing process is that it gives the administrator the benefit of criticisms and suggestions from representatives of the industries that will be regulated. It was just such a give-and-take process that prompted the Pollution Control Agency to amend the rules as finally proposed for adoption.

Finding 10 at page 11 of the Hearing Examiner's Report. While the Chief Hearing Examiner recognized in his Memorandum at page 8 of his Report that "[t]he rulemaking process in Minnesota has been established to provide for the exact "give and take" which occurred in this hearing," there are several statements in his Report that

deserve discussion initially, lest these statements be interpreted too broadly to require a new hearing for nonsubstantial changes.

On one occasion the Chief Hearing Examiner says that less stringent requirements in the evaluation procedures are substantial changes because "groups supporting the more stringent requirements would have had no notice." Finding 11 at page 6 of the Chief Hearing Examiner's Report. On the other hand the Chief Hearing Examiner complains that the more stringent concentrations in List 2 in HW 2.B.2. were made without notice to those favoring the higher concentrations. Finding 9 at page 5. The logical extension of this reasoning is that an agency may never make a change in either direction without reconvening the hearing. The Chief Hearing Examiner could not have meant such a result, and obviously whether a change is less stringent or more stringent than the original proposal is not what determines whether a change is substantial.

Another misconception that might be interpreted from the Chief Hearing Examiner's Report is the idea that an agency cannot adopt language that had not been discussed earlier. The Hearing Examiner certainly has the prerogative to recommend new language in the rules, as he did here, see Finding 36 at page 50 of the Hearing Examiner's Report, and the agency, as the final policymaker and decisionmaker, must maintain the same right. The fact that an agency has adopted language that was not suggested during the hearing does not alone make a change substantial.

What does make a change substantial are those qualities listed in the Hearing Examiner's Rule HE 108. A substantial change is one

that to some degree (1) affects classes of persons not represented at the hearing, (2) goes to a new subject matter of significant substantial effect, (3) makes a major substantive change that was not raised initially to invite reaction at the hearing, or (4) results in a fundamentally different rule. These are the qualities that will be focused on below, and not whether a change is less or more stringent or made by the Agency or someone else.

B. The Chief Hearing Examiner Made a Preliminary Determination that None of the Changes Introduced at the Hearing Was a Substantial Change

One of the most baffling aspects of the Chief Hearing Examiner's Report is his inexplicable failure to even acknowledge that he had previously reviewed these so-called "February 3 amendments" and determined that they would not result in rules substantially different from those which had originally been proposed. The record shows that he did review them and that, as a result of his review, two other suggested amendments which he found would substantially change the rules were withdrawn by the Agency at that time.

On the morning of February 1, 1978, after a several week recess, the Hearing Examiner made the following statement:

> [W]hile we were off the record, we held discussions concerning whether or not the new proposals will be a "substantial change". I indicated that the final determination will be made not by me but rather by Mr. Duane Harves, the Chief Hearing Examiner of the Minnesota Office of Hearing Examiners. As soon as we go back off the record, I will contact Mr. Harves to see if he is available today to review the new proposal. I know that if he is not available today he will be able to devote adequate time to reviewing the new proposal this evening so that we will have an answer in any event by tomorrow. So it's my intention to . . . continue this matter until the first thing tomorrow morning. At that time I will give

> an indication, or Mr. Harves himself might come and give an indication of his view as to whether or not there has been a substantial change with respect to the new proposals. If there has not been a substantial change in Mr. Harves' opinion, then obviously we will just proceed with the on-going hearing. . . .

Tr. at 2889. After a brief recess, the Hearing Examiner made the following announcement:

> While we were on break, I contacted Mr. Harves, the Chief Hearing Examiner. He indicates that . . . he can start reviewing it now if I bring back the amendments at this time and complete his review this evening at home. . . . [W]e will reconvene . . . tomorrow morning . . . and we will have the decision of the Chief Hearing Examiner.

Id. at 2891.

Following review of the proposed amendments by the Chief Hearing Examiner, the Hearing Examiner reported back on the following day:

> Yesterday after we recessed at about 10:30, I took the proposed amendments back to my office with, of course, the originally proposed amendments [sic] and they were reviewed by Mr. Duane Harves, who is the Minnesota Chief Hearing Examiner. His review was necessarily rather hasty because of the short time constraints we were operating under and, of course, his review did not have the benefit of a full record as would normally be the case when he reviews regulations . . . but in his preliminary investigations of the information he did have, he found that, in his opinion, applying the criteria of the regulations of the Minnesota Office of Hearing Examiners as to substantial change, he found that the proposed -- new proposed regulations primarily or basically do not have what he would consider substantial changes, except for two areas.

Tr. at 2897. (The two areas mentioned above as substantial changes are described at Tr. at 2897-2899. The Agency never indicated whether it agreed with the Chief Hearing Examiner or not, but these two amendments were never introduced.)

The Agency could understand -- although it would still disagree

with -- a forthright conclusion by the Chief Hearing Examiner that his prior determination with respect to the February 3 amendments was only preliminary and was wrong for one reason or another. But his failure to even acknowledge that determination is bewildering. Here, he has offered no reason for changing his mind on the issue, and he has not pointed to anything which was not before him on February 2, 1978, when he made his initial determination on the February 3 amendments.

C. The Public, Including Industry, Government, and Environmental Groups, Was Given Notice of the Broad Scope of the Hazardous Waste Rules

Before the rules were even proposed for adoption, the public was aware of the comprehensive set of rules that was being developed by the Agency for hazardous waste management and all members of the public were invited to participate. As early as July 13, 1976, notice was published in the State Register of public meetings that would be held to discuss hazardous waste management rules. See 1 S.R. 23. Many comments were submitted to the Agency regarding the drafting of these rules. See PCA Exhibit 3. The public has been aware from the start of the broad scope of these rules and has had an opportunity to participate from the beginning.

The original Notice of Hearing was mailed out to those on the Secretary of State's List on September 16, 1977, see PCA Exhibit 2, and was published in the State Register on September 19, 1977. The Notice indicated that the proposed rules would establish criteria for determining whether a waste is hazardous, would require producers of most wastes to evaluate their wastes, and would require handling

and disposal of all hazardous wastes in accordance with the proposed rules. The caption of the Notice, and all other documents in this matter, which was printed in bold, black letters in the State Register, said that the hearing would involve the identification, labeling, classification, storage, collection, transportation, and disposal of hazardous waste. The Notice cited the statutes under which the rules would be promulgated, and these statutes contain the same broad list of powers to regulate hazardous wastes.

The Hearing Examiner recognized the broad scope of this proceeding:

> The proposed regulations are designed to monitor and regulate hazardous wastes from the time they are generated until their final disposal at an appropriate site including interim storage and transportation. This "cradle to grave" approach is designed to minimize or eliminate the dangers inherent with the disposal of hazardous waste.

Finding 4 at page 3 of the Hearing Examiner's Report.

The changes made in the proposed rules must be evaluated in light of the notice that was given the public. In the Agency's judgment none of the changes went beyond what this proceeding was all about such that an additional hearing is necessary.

D. Additional Notice Was Given to the Public of Proposed Changes in the Rules

On December 14, 1977, during the nineteenth day of hearings on these rules, the Hearing Examiner announced that a recess in the hearings was mandated by his workload in other cases. Tr. at 2443-44. The hearings had, by then, become a more prolonged proceeding than everyone had anticipated. Id. at 2448. The Hearing Examiner urged that the recess period be put to a useful purpose,

stating that he was hopeful that the Agency staff would take advantage of the recess to do some rewriting work, if the staff felt that such rewriting were necessary. Id. at 2452. After counsel for the Agency staff indicated that the staff had no intention to engage in substantial changes which would require renoticing the rules, id. at 2452-53, the Hearing Examiner stressed that he did not have such changes in mind:

> [T]hat's not what I'm referring to. I'm referring to any corrective devices that you may see at this point that might be necessary to cure those faults in the regulations which are not of a substantial nature.

Id. at 2453. He further stated:

> I would like to see some of the time spent during the continuation period with those parties meeting with staff attorneys to see if they can come to some agreement at least to some of the points that have been in controversy. I see no reason why efforts can't be put forth during this period of time to accomplish some of these ends.

Id. at 2454.

In the ensuing pages of transcript, representatives of the industry, who had been probing the testimony of the Agency's witnesses through intense questioning over a period of several months, agreed to meet with the Agency staff's attorneys to discuss the contents of the rules and possible amendments thereto. Id. at 2455-58. At that point, Dr. Stephen Chapman, a respected, diligent, and outspoken environmental advocate, who took part in the hearings on behalf of Clear Air-Clear Water, suggested that any such meetings between industry representatives and representatives of the Agency should be open to the public and should be the subject of a public notice. Id. at 2459-60. In response to this suggestion, the Hearing Examiner suggested that, when publishing a formal notice

of the recess and resumption of the hearings, the Agency staff should also indicate that it would be receiving comments from the public during the recess. Id. at 2462. Various modes of notice were discussed, and the Agency staff agreed that publication in the State Register would be accomplished. Id. at 2463.

Dr. Chapman then remarked that any suggested changes in the rules should also be made available to the public for comment. Id. at 2468. The Hearing Examiner specifically stated that he did not believe that full publication of the proposed textual changes would be appropriate. Id. The Hearing Examiner explained his reasoning as follows:

> I'm talking of changes that wouldn't be substantial in nature, but changes that might be indicated because of what has transpired up to this point in time. I don't see that [i.e., republication of the proposed amended text] would be possible for the Pollution Control Agency staff, if they decide to make some minor changes, to put them together in written form and republish them up for comment again before we get back to the hearing process. I don't think it's legally required, number one, and number two to publish in the State Register it's a 30 or 35 day period. I am sure that everybody has learned something up to this point in time through the hearing process and it's only natural to assume that there is going to be some possible changes in the proposed regulations, if they are adopted, because that's the purpose of a public hearing process. I have never noted [sic] the Pollution Control Agency to be so rigid to say these are proposed regulations and we stick with them and when the hearing process is over, say we have been right and everybody else is wrong and we are going to stand on them. The hearing process is a learning event for everybody and at the conclusion of the public hearing there is some rewrite work that's done and sent into the Hearing Examiner as a post hearing submission and when those post hearing submissions do not include substantial changes and

> they are minor changes, they will be recommended for adoption with those minor changes. There is a purpose for the public hearing process and that's because it's a learning process and up to this point I hope everybody has learned a little something. I have learned a lot.

Id. at 2468-69 (emphasis supplied).

All who were present at the December 14, 1978, hearing session were aware that this reasonable approach to resolving differences over very complex but important rules would be employed in an effort to generate real progress during the recess. The Agency did, in fact, cause two public notices to be published in the State Register. The first notice, appearing at 2 S.R. 1272 (December 26, 1977), informed the public that the hearings were being continued and that comments could be submitted at the hearing and thereafter to the Hearing Examiner. The second notice, appearing in 2 S.R. 1412 (January 23, 1978), stated in part:

> Members of the Pollution Control Agency staff will be meeting with various members of the public while the public hearing is adjourned to discuss the regulations and possible amendments to the regulations as proposed. Any members of the public interested in participating in these discussions are encouraged to do so. For further information, contact Mr. Michael Kanner of the Pollution Control Agency staff at (612) 296-7352.

Both of these notices were also admitted into the record, as PCA Exhibits 41 and 44.

When the hearings resumed, counsel for the Agency staff discussed on the record the fact that there had been two meetings, and that the staff had drafted proposed amendments to the rules as a result of these meetings. Tr. at 2855-57. Mr. Mitchell then stated:

> I would like to adjourn the hearing until Wednesday morning at 9:30. The rest of today and tomorrow we will meet with whatever parties, whatever people want to attend to discuss some of these draft amendments that we have put together.

Id. at 2861. The Hearing Examiner, in an effort to provide the public with even more time to review the proposed amendments, decided to adjourn for a significantly longer period, stating:

> I am hopeful that some worthwhile negotiations took place during the interim thus far . . . . I am going to continue this matter. I do believe that the public is entitled to go back to their concerned clients and return again to the public hearing process to let us know as to what their opinions are with regard to the proposals.

Id. at 2880. The hearing was then adjourned until February 1, 1978.

As the foregoing narrative demonstrates, members of the public were afforded notice of pending negotiations and possible amendments to the rules to the maximum extent possible, which the Hearing Examiner determined to be reasonable under the circumstances. The Agency respectfully submits that the Hearing Examiner's conclusions in this regard were sensible and well-founded. In particular, the Hearing Examiner correctly assessed the governing law when he noted that members of the public have no right to expect that rules as originally proposed by an agency will remain immutable.

Even if (as is not the law) affected groups or persons had a justifiable right to rely on the immutable nature of the rules as originally proposed, the notice published in the State Register on January 23, 1978, provided full and ample warning to all such persons and groups that amendments to the rules were being contemplated, that

discussions with interested persons were being held, that anyone was welcome to attend these discussions, and that a simple telephone call to a named individual would result in the provision of any further information which they might need to protect their interests. Moreover, the notice stated that hearings would be resumed on a date certain, and any affected person or group had to know that the resumed hearings would address any proposed changes to the rules which had been drafted as a result of these discussions. The publication of this notice in the State Register had precisely the same breadth of distribution as would the publication in the State Register of the February 3 amendments, which the Chief Hearing Examiner now suggests. Any affected groups and persons who stayed away from the hearings under these circumstances and failed to make a single telephone call to ascertain a status report demonstrated sheer indifference to the developing progress and content of the rules. The Hearing Exmainer sensibly accepted this view of the matter, and found that all procedural rights had been adequately protected by the Agency.

The Agency submits that the January 23, 1978, notice was fully adequate to alert interested and affected persons and groups to the existence of impending amendments. It is not surprising that no environmental group or waste producer or any other person or group has claimed that the February 3 amendments improperly affect its interests without adequate notice.

Moreover, the public was given notice that the Agency would be considering adoption of the hazardous waste rules at its meeting on July 25, 1978. The agenda was prepared more than ten days before the meeting. The staff position in response to the Hearing Examiner's Report, including a recommendation on several amendments, was mailed out on July 7. At the July 25 meeting the rules were openly discussed and the action of the Agency in adopting the rules, with

certain amendments, was done at the open meeting. Several members of the public addressed the Agency and expressed their views. Similarly, the action of the Agency at the August 29 meeting was taken only after ten days notice to the public. This entire rulemaking process has been undertaken with complete knowledge and participation of all interested persons.

E. The February 3 Changes Objected to by the Chief Hearing Examiner Are Not Substantial Changes

1. HW 2.B.2.

In Conclusion 3 the Chief Hearing Examiner said that the inclusion of arsenic and chromium in List 2 in HW 2.B.2. and the reduction of the concentrations of certain chemicals in List 2 affected classes of persons not represented at the hearing. The classes of persons the Chief Hearing Examiner thought were not represented at the hearing were those generating wastes with arsenic and chromium and those generating wastes with aldrin, chlordane, DDT, PCB, and toxaphene at concentrations less than that proposed. Finding 9 at page 5 of the Chief Hearing Examiner's Report. The Agency disagrees emphatically with the Chief Hearing Examiner.

While, admittedly, it is difficult to define what a "class of persons" is, the Agency is disappointed that the Chief Hearing Examiner chooses to interpret that provision of HE 108 so minutely that persons generating wastes with cadmium or lead are in one class and persons with arsenic and chromium wastes are in another class, and persons with PCB-containing wastes in excess of one concentration are in one class and persons with PCB wastes below that concentration are in another class. In the Agency's view, all of these persons would be in the same class in this proceeding for purposes of HE 108. Rather than debate the semantics, however, it appears more worthwhile to the Agency to discuss this problem as the due process question that substantial change really is. With due process in

mind, the question is whether generators of arsenic and chromium wastes and PCB wastes of certain concentrations had notice that their interests would be affected in this proceeding. When that question is answered, then those generators can be placed in the same or separate classes.

From their inception, the proposed hazardous waste rules have required the evaluation of every waste (other than certain "exempt" wastes under HW 2.C., which is not relevant here) to determine if in fact they are hazardous. See HW 2.D.1. Any person who produces any non-exempt waste within the State or who produces such a waste outside the State which is transported to the State must conduct such an evaluation. All waste producers have thus been affected by the proposed rules since their publication in the State Register prior to the hearings. These persons have had adequate notice that their interests were being considered in this rulemaking hearing. No waste producer can be said to have "had no reason to attend the hearings." The rules as originally proposed and in their final form have never exempted from their coverage the waste producers on which the Chief Hearing Examiner has now focused.

Moreover, it would have been unrealistic and plainly unjustified for any person to examine the proposed rules and conclude that, because their wastes contained materials not included in List 1 or List 2, or at lower concentrations than proposed, they need not attend the hearing. From the beginning, these rules were intended to reach any and all wastes that have certain properties, including wastes which are not on the checklists in List 1 or List 2. The various subparts of HW 2.B. are not mutually exclusive categories of wastes, but are complementary and overlapping methods

for defining wastes which are, in fact, hazardous, because they "present a substantial present or potential hazard to human health or to other living organisms." Arsenic and chromium and their compounds are known carcinogens. See Finding 16 at page 14 of the Hearing Examiner's Report and Finding 16 at page 2 of the Agency's Findings of Fact and Conclusions. See also PCA Exhibits 13, 15, and 16. Aldrin, chlordane, DDT, PCB, and toxaphene are bioconcentrative, a characteristic that makes them hazardous at extremely low concentrations. See Finding 16 at page 15 of the Hearing Examiner's Report and Finding 16 at page 2 of the Agency's Findings of Fact and Conclusions. See also Anders, Tr. at 361-363. Generators of these carcinogenic and bioconcentrative wastes were well aware that their interests would be at stake in the hearing.

It must be mentioned, too, that producers of arsenic and chromium wastes have always been specifically affected by these rules. From the outset these wastes were contained in List 1 in HW 2.B.1. as a hazardous, carcinogenic waste. All that the February 3 amendment accomplished with respect to arsenic, chromium and their compounds was to add them to List 2 (HW 2.B.2.), while simultaneously retaining them in List 1 (HW 2.B.1.). Persons generating wastes containing these compounds had every reason to attend the hearings, because the rules as originally proposed clearly applied to these compounds (HW 2.B.1.) as well as to all wastes (Hw 2.D.1.).

The Agency submits that the changes made in HW 2.B.2. are not the kind of changes that affect a new class of persons. Producers of arsenic and chromium wastes and certain bioconcentrative wastes had notice that their interests would be affected by this proceeding.

2. Evaluation Procedures - HW 2.D. and HW 3.

In Conclusion 4 at page 7 of his Report, the Chief Hearing Examiner concludes that certain changes in the evaluation procedure are substantial changes in several respects. He says these changes affect classes of persons not represented at the hearing, make substantive changes that were not raised by the original Notice of Hearing, and result in a fundamentally different rule. The Agency, which, as described earlier, thinks these changes were mainly clarifying changes, could not disagree more.

The Chief Hearing Examiner puts groups who liked the old provisions in a separate class from those who like the changes. See Findings 10 and 11 at pages 5 and 6 of the Chief Hearing Examiner's Report. The Agency disagrees that a change in the language creates two groups -- one liking the old language and one liking the new. If this proposition were true, every change in the rules would create two classes of persons.

Proposed rules are routinely modified during the process of rulemaking proceedings and, as the Hearing Examiner noted at Finding 10 at page 11 of his Report, that is one of the strengths of the rulemaking process in this State. Interested and affected persons and groups must and surely do understand that the rules as originally proposed are always subject to possible modification during the rulemaking process. The process is not simply a forum for those who disagree with the rules and wish to change them; it is also a forum for those who support the rules and do not wish to see them changed in any respect. Any person or group which is affected by a rule as originally proposed (such as all persons who produce any

waste in this State) can remain aloof from the rulemaking process only at the peril of having their concerns unrepresented. The evaluation procedure has been a part of this proceeding from the beginning and there are no new groups that are affected by the changes made.

The Chief Hearing Examiner's conclusion that these changes were not raised by the original Notice is especially perplexing since the record is filled with discussions of the evaluation procedure. See e.g., Tr. at 1707-1744; 2370-2377. Apparently, the original Notice was sufficient to invite reaction on the evaluation requirements in the proposed rules.

Finally, the Chief Hearing Examiner claims that these changes result in fundamentally different rules. This statement is incredible and can only be explained by a microscopic reading of the rules. The hearing was on rules for the management of hazardous wastes, including the evaluation of wastes; that is what was proposed and that is what was adopted. No fundamental changes were made in HW 2.D. and HW 3.

F. The July 25 Changes Objected to by the Chief Hearing Examiner Also Are Not Substantial Changes

The Chief Hearing Examiner concluded that changes in HW 1.G., HW 8.C.3.d., HW 8.E.6., and HW 9.D.1. were substantial changes because they affect unrepresented classes of persons, they make major substantive changes without allowing for reaction, and in certain instances (which the Chief Hearing Examiner does not identify) they result in a fundamentally different rule. See

Conclusion 2 at pages 6-7 of the Hearing Examiner's Report. The Agency, of course, disagrees with this Conclusion and finds that these changes are such inconsequential changes that it hardly knows how to rebut the Chief Hearing Examiner other than to identify the change.

1. HW 1.G.

This change was merely the inclusion of the preemption doctrine, to provide that persons did not have to comply with any provisions of these rules that were preempted by federal law. The Chief Hearing Examiner found that the new language was a correct statement of law but that it narrowed considerably language that was discussed during the hearing. Finding 7 at page 2. There are three reasons why the Chief Hearing Examiner is incorrect in calling this a substantial change. One, he has mistakenly compared the final language with language discussed during the hearing, instead of with what was proposed initially. Initially, there was no preemption language at all in HW 1.G. In the Agency's view the courts would have applied the preemption doctrine whether it was written in the rules or not. Therefore, including specific language recognizing the preemption doctrine, while it may be helpful to those reading the rules, has no legal effect and cannot be a substantial change. Second, the Agency made it clear that it never intended even the language the Chief Hearing Examiner thought was considerably broader to be anything other than a statement of legal doctrine. See Finding 36 at page 6 of the Agency's Findings of Fact and Conclusions. The Agency's own specific interpretation of this language negates its substantiality. Third, if the discussion of this issue was as extensive as the Chief Hearing Examiner states, it surely was raised by the original Notice of Hearing and is not a substantial change.

For all these reasons the Agency asserts that a correct statement of the preemption doctrine is not a substantial change that requires a new hearing.

2. HW 8.C.3.d.

The Chief Hearing Examiner claimed the addition of a waste code number to the shipping papers was a substantial change. A shipping papers requirement was always part of the proposed rules and the public did have notice of it. A good deal of testimony was devoted to the shipping papers. See, e.g., Tr. at 2592-2602. It can hardly be said that this language involves a matter that was not reacted to at the hearing. The Chief Hearing Examiner was also concerned that elimination of the chemical composition requirement would upset environmental groups. As was discussed earlier, however, there is still ample data in the shipping papers to provide a quick, proper response to spills. In addition, generators of hazardous waste will still have to determine the chemical composition of their wastes and report that to the Agency. HW 3.D.1.b. Indeed, this information is necessary before a waste code number can be assigned. This change is not a substantial change.

3. HW 8.E.6.

This change has to do with the participation of counties in the management of hazardous wastes. Provisions have always been included in the rules for county participation, the public had notice of that, and this change is hardly a fundamental change.

4. HW 9.D.1.

The Chief Hearing Examiner is concerned that "potential interest groups" may favor a more complete reporting by the counties than is required by HW 9.D.1., which requires everything the statute allows. Again, the Agency can only state that to describe the change is to belie its substantiality. The public had notice that provisions would be included in the rules regarding county participation, the public actually did comment on it at the hearing, see Tr. at 3185-88, and the new language hardly changes the rule in a fundamental way. This change, too, is not a substantial change.

CONCLUSION

The Minnesota Pollution Control Agency asserts that the findings of the Chief Hearing Examiner regarding the legality of rules adopted by an agency are only advisory, and an agency maintains the right to disagree with the Chief Hearing Examiner and send the rules to the Attorney General for his review. The Agency urges the Attorney General to similarly hold and to review the record in this case and make his own judgments on the legality of the Agency's hazardous waste rules.

The Agency strongly disagrees with the Chief Hearing Examiner that certain provisions of the rules are not supported by the record and are substantially changed from what was proposed. The Agency has pointed out evidence in the record that supports each of the provisions rejected by the Chief Hearing Examiner as lacking support. In addi-

tion, the Chief Hearing Examiner has not correctly interpreted the issue of substantial change and has too narrowly applied the law to these rules. None of the changes rejected by the Chief Hearing Examiner is the kind of change that fundamentally changes the rules or affects unrepresented classes of people or is the kind of change for which the public was not on notice would be a subject of this hearing. The original Notice of Hearing and subsequent notice gave the public ample opportunity to scrutinize the rules and to be heard on all aspects of the rules, including the final changes thereto. If any such persons have not been represented in the process, it has been by their own choice, not because they had a justifiable expectation that their interests were not affected or that the rules as originally proposed would remain chiseled in stone.

It is time to bring these long proceedings to a close. The rules as adopted and submitted herewith to the Attorney General are amply supported by the record, have not been attacked by any of the numerous participants in the long rulemaking process or by any non-participant, and have not resulted in rules substantially different from those which were originally proposed. The Agency urges the Attorney General to file the rules with the Secretary of State.

Respectfully submitted,

ELDON G. KAUL
Assistant Attorney General

By Alan R. Mitchell
Alan R. Mitchell
Special Assistant
Attorney General

and John-Mark Stensvaag

John-Mark Stensvaag
Special Assistant
Attorney General

1935 W. County Road B2
Roseville, Minnesota 55113
Telephone: (612) 296-7342

Attorneys for the Minnesota
Pollution Control Agency

Dated: September 7, 1978

evaluate such wastes to determine whether they have any of the properties of an explosive material, a flammable material, an irritative material, a corrosive material, an oxidative material, and a toxic material. Such generators are also not required for such wastes to conduct a quantitative analysis to determine the concentration of each component in List 1 that is known or suspected to be in the waste nor a leachate test for each component in List 2 that is known or suspected to be in the waste.

4. Testing for Flammable Properties. Whenever the flash point of a waste is to be determined, one of the following test procedures shall be used. The test chosen shall be appropriate for the characteristics of the waste that is tested.

a. Standard Method of Test for Flash Point by Tag Closed Tester (ASTM D56-70).

b. Standard Method of Test for Flash Point of Aviation Turbine Fuels by Setaflash Closed Tester (ASTM D3243-73).

c. Standard Methods of Test for Flash Point of Liquids by Setaflash Closed Tester (ASTM D3278-73).

d. Standard Method of Test for Flash Point by Pensky-Martens Closed Tester (ASTM D93-73) or alternate tests authorized in this standard.

For any waste containing components with different volatilities and flash points and having a flash point higher than 200°F (93.3°C) according to the test procedure employeed, a second test shall be

conducted on a sample of the liquid portion of the material that remains after evaporation in an open beaker (or similar container), under ambient pressure and temperature (20 to 25°C) conditions, to 90 percent of original volume or for a period of four hours, whichever occurs first, with the lower flash point of the two tests being the flash point of the material.

5. Testing for Toxic Properties. Any person who is determining whether a waste is a toxic material may elect to use the following modification to the LC_{50} and LD_{50} test procedures if the actual LC_{50} or LD_{50} is unknown:

a. A single dosage or exposure level equivalent to the maximum dosage or exposure level in HW 1 B.37. which establishes that a material is a toxic material shall be administered to a test population of ten animals. The animals shall be the kind specified in the LC_{50} and LD_{50} test procedures. The animals are then observed for a period of 14 days or 96 hours whichever is applicable. If five or more of the test animals die, the waste shall be classified as a toxic material. If three or four of the test animals die, then either the waste shall be classified as a toxic material or additional dosage or exposure levels shall be tested and the actual LD_{50} or LC_{50} determined. If less than three of the ten test animals die, then the waste shall not be classified as a toxic material.

6. Testing for Corrosive Properties. Any person testing for corrosive properties may elect to use the following procedure for

a nonaqueous waste: The person may prepare an aqueous solution that contains equal parts of the waste and water and test it for pH. If the pH of the solution is greater than 12 or less than 3, the person may classify the waste as a corrosive waste in lieu of evaluating the waste for the criteria indicated by HW 1 B.5. If the person elects not to classify the nonaqueous waste as a corrosive waste or if the pH of the solution is not greater than 12 or less than 3, additional evaluation to determine corrosivity must be performed.

7. Sample Collection. In the event the person evaluating the waste must conduct tests to determine the properties of the waste, the person shall collect a representative sample of the waste. In an attempt to collect a sample at the time when the properties being measured pose the greatest hazard, the person shall consider the following variations in the waste composition and their causes in collecting a sample for evaluation:

a. Variations in the process by which the waste is produced.

b. Variations in chemical composition and physical state.

c. Any other variations indicated by past experience with the waste or similar wastes.

F. Results of Evaluation. If the person evaluating the waste determines that the waste has any properties of a hazardous waste, the person shall file a disclosure with the Agency and manage the waste in accordance with the requirements of these regulations.

G. Submission of Evaluation Results.

1. The Director may request at any time that a person producing a waste submit the results of the evaluation of the waste to the Agency. Upon such request by the Director, setting forth the reasons therefor, the person shall submit the following information:

a. The type of waste and the source or process from which it was produced.

b. The chemical composition of the waste and the anticipated fluctuations in its chemical composition.

c. The concentration of each component in List 1 that is known or suspected to be in the waste and the concentration in the leachate of each component in List 2 that is known or suspected to be in the waste. If the component is not detected in the waste or in the leachate, the level of detectability of the testing method used shall be reported.

d. The results of the evaluation to determine whether the waste has any of the properties of an explosive material, a flammable material, an irritative material, a corrosive material, an oxidative material, and a toxic material and the source of the data or information relied upon.

e. In the event any tests were conducted to evaluate the waste, the person shall submit the following;

(1) The sampling procedure and the reasons for determining that the sample is representative of the waste.

(2) The results of all tests conducted.

(3) A discussion of the accuracy and precision of any tests conducted.

2. If the person who is requested by the Director to submit the results of an evaluation of a waste fails to submit the required information within thirty (30) days after the request, the waste shall be managed as a hazardous waste and the person who produces the waste shall be considered a generator until the Agency has determined whether the waste is hazardous or not.

3. If the Director determines that the results of the evaluation are not adequate to determine whether or not the waste is hazardous, the Director may require the person to conduct an additional evaluation. The Director shall notify the person in writing of such determination, the reasons therefor, and the additional tests that must be run or additional data that must be obtained. If the results of the additional evaluation are not reported to the Agency within thirty (30) days of the request, the waste shall be managed as a hazardous waste and the person who produces the waste shall be considered a generator until the Agency has determined whether the waste is hazardous or not. The Director may grant up to an additional ninety (90) days where the person demonstrates such extension to be necessary.

H. Agency Determination That A Waste Is Hazardous.

1. The Agency or any member, employee, or agent thereof, when authorized by it, may enter upon the property of the person who produces any waste to take samples of the waste and may conduct tests, analyses, and evaluations to determine whether the waste is

a hazardous waste. The results of the tests, analyses, and evaluations shall be made available, upon request, to the person.

2. The Director may recommend to the Agency that a waste be classified as a hazardous waste because it has one or more of the properties of a hazardous waste or because the waste cannot be handled by routine waste management techniques because it poses a substantial or potential hazard to human health or other living organisms. The Director shall notify the person producing the waste in writing of the recommendation and the person shall have at least thirty (30) days to submit any additional material or written comments to the Agency before the Agency makes a determination. The Agency shall notify the person in writing of its decision. The Agency shall hold a public hearing upon request of the person producing the waste.

3. In the event the Director recommends that a waste be classified as a hazardous waste, the waste shall be managed as a hazardous waste and the person who produces the waste shall be considered a generator until the Agency has determined whether the waste is hazardous or until six months after the date of the Director's recommendation, whichever occurs first; provided, however, that the person shall not be required to obtain a Hazardous Waste Facility Permit for storage of the waste on-site during this time. Any such recommendation by the Director shall be considered by the Agency on an expeditious basis.

HW 3 GENERATION OF HAZARDOUS WASTE

A. Applicability. This regulation prescribes the duties of a generator.

B. Production of a Hazardous Waste. No person shall produce a hazardous waste within the State of Minnesota or produce a hazardous waste outside the State of Minnesota that is transported to a hazardous waste facility within the State of Minnesota unless that person has adequate financial resources to insure that the hazardous waste is disposed of, treated, or processed at a hazardous waste facility permitted to manage such waste. Nothing in this provision is intended to restrict or enlarge or affect in any way, any liability the generator may have to correct the mismanagement of the hazardous waste or pay for damages or alleviate any pollution caused by the mismanagement of the hazardous waste.

C. Preparation of a Disclosure. Each generator shall prepare a disclosure for each hazardous waste that he produces or transports, except used crankcase oil that is collected by a transporter registered pursuant to HW 5 E.

D. Contents of a Disclosure.

1. Each generator in its disclosure shall include the following information:

a. The type of waste and the source or process from which it is generated.

b. The chemical composition of the waste and the anti-

cipated fluctuations in the chemical composition that will occur during normal operations.

c. The concentration of each component in List 1 that is known or suspected to be in the waste and the concentration in the leachate of each component in List 2 that is known or suspected to be in the waste. If the component is not detected in the waste or in the leachate, the level of detectability of the testing method used shall be reported.

d. The hazardous properties of the waste and the source of the data or information used to identify the hazardous properties.

e. In the event any tests were conducted to evaluate the waste, the following information shall be included in the disclosure:

(1) The sampling procedure and the reasons for determining that the sample is representative of the waste.

(2) The results of all tests conducted.

(3) A discussion of the accuracy and precision of any tests conducted.

f. A list of special handling procedures, labels and safety equipment necessary for safe handling and storage of the hazardous waste.

g. The name, address, telephone numbers, and title of the individual at the generator's facility responsible for arranging for the management of the hazardous waste.

h. A copy of procedures for personnel to follow in the case of spills of the hazardous waste.

i. A summary of the following relating to the management of the hazardous waste for the year preceeding the filing of the disclosure or for the period since the last disclosure was filed if that filing was more than one year ago:

(1) The amount of the hazardous waste produced.

(2) The names and identification numbers of the transporters utilized.

(3) The names of the hazardous waste facilities utilized, and, as applicable:

(a) The numbers of the Hazardous Waste Facility Permits issued by the Agency for those facilities located in the State of Minnesota.

(b) The addresses of those facilities located outside the State of Minnesota.

(c) The name of the waste water treatment works to which a sewered hazardous waste was discharged.

(d) The NPDES or State Disposal Permit number for discharges to sewers other than a municipal sewer system.

(4) A summary taken from the shipping papers and other records of the generator of the amounts spilled, amounts recovered, and any resultant environmental or health damages from spills of the hazardous waste.

j. A prediction of the following relating to the management of the hazardous waste for the year immediately following the filing of the disclosure:

(1) The estimated amounts to be produced.

(2) The names and identification numbers of the transporters to be used.

(3) The frequency with which the hazardous waste is expected to be transported or discharged.

(4) The names of the hazardous waste facilities to be involved in the management of the hazardous waste and, as applicable:

(a) The numbers of the Hazardous Waste Facility Permits issued by the Agency for those facilities located in the State of Minnesota.

(b) The addresses of those facilities located outside the State of Minnesota.

k. A list of all nonexempt wastes of the generator that have been determined by the generator to be nonhazardous wastes. The list shall include the type of waste and the source or process from which the waste was produced. Examples of the information required are (1) salt solution from water softening, and (2) wash water from potato processing.

l. Any other information that the generator deems important.

2. Generators of wastes that are comprised of small amounts of unrelated chemicals such that a description of any sample or

set of samples is not representative of the total waste, generators of petroleum waste, and generators of used crankcase oil are not required to include in the disclosures for those wastes the items listed in subparts b, c, d, and e above, but these generators shall identify those components in List 1 or List 2 in HW 2 B. that the generator knows or suspects are in the waste.

3. No person shall make a false statement in a disclosure. The disclosure shall be submitted under oath.

E. Submission of a Disclosure to the Agency.

1. Existing Hazardous Waste. Each generator who is producing a hazardous waste in the State of Minnesota or who is producing a hazardous waste outside the State of Minnesota that is being transported to a hazardous waste facility within the State of Minnesota on the day these hazardous waste regulations take effect shall submit a disclosure to the Agency within one year after the effective date of these regulations. A generator who has produced a hazardous waste in the past and who anticipates producing that hazardous waste in the future may elect to file a disclosure on that hazardous waste under this provision. In such event, the generator shall not be required to file a disclosure under HW 3 E.2. for that waste.

2. New Hazardous Wastes.

a. Any generator who produces a hazardous waste in the State of Minnesota that is not being produced on the day these hazardous waste regulations take effect shall submit a disclosure to the Agency within ninety (90) days after first producing

the hazardous waste. The hazardous waste shall not be disposed of or change possession until at least thirty (30) days after the disclosure is filed with the Agency.

b. Any generator who produces a hazardous waste outside the State of Minnesota that is not being transported to a hazardous waste facility within the State of Minnesota on the day these regulations take effect shall file a disclosure with the Agency before the hazardous waste is transported to a hazardous waste facility within the State of Minnesota. The hazardous waste shall not be transported to a hazardous waste facility within the State of Minnesota until at least thirty (30) days after the disclosure is filed with the Agency.

3. Annual Resubmission of a Disclosure.

a. After submitting its first disclosure, each generator who is required to submit a disclosure pursuant to subparagraph 1 shall submit a subsequent disclosure according to the following schedule if any hazardous waste has been produced or managed since the first disclosure:

FIRST LETTER IN NAME OF GENERATOR	MONTH OF SUBMISSION (The disclosure shall be made the first time the indicated month occurs after the regulations have been in effect for a period of two years.)
L-N	January
A-C	March
D-G	May
T-Z	July
O-S	September
H-K	November

Each such generator shall submit a new disclosure within ten (10)

days of the anniversary date of the second disclosure if any hazardous waste has been produced or managed in the preceding year.

b. Any generator who is required to file a disclosure pursuant to subparagraph 2, shall submit a new disclosure within ten (10) days of the anniversary date of the first disclosure.

c. In submitting a new disclosure for a hazardous waste, the generator need not repeat any information required in a disclosure that has not changed from the previous disclosure, but may merely indicate that the information is the same.

d. Any generator who does not submit a disclosure because the hazardous waste was not produced or transported during the preceding period or year shall inform the Agency of such fact and shall comply with the requirements for submitting a disclosure for a new hazardous waste in the event a hazardous waste is again produced or transported.

F. Preparation of Hazardous Waste Shipping Papers. Each generator shall prepare hazardous waste shipping papers for each hazardous waste in accordance with HW 8.

G. Preparation of Hazardous Waste Labels.

1. Each generator shall attach a "Hazardous Waste" label to each container and portable tank containing hazardous waste in accordance with the following requirements:

a. The label shall not be smaller than 4" by 6 1/4". The letters, "HAZARDOUS WASTE," shall not be less than 3/4" high. Except for size and color, the label shall have the appearance

of the following design:

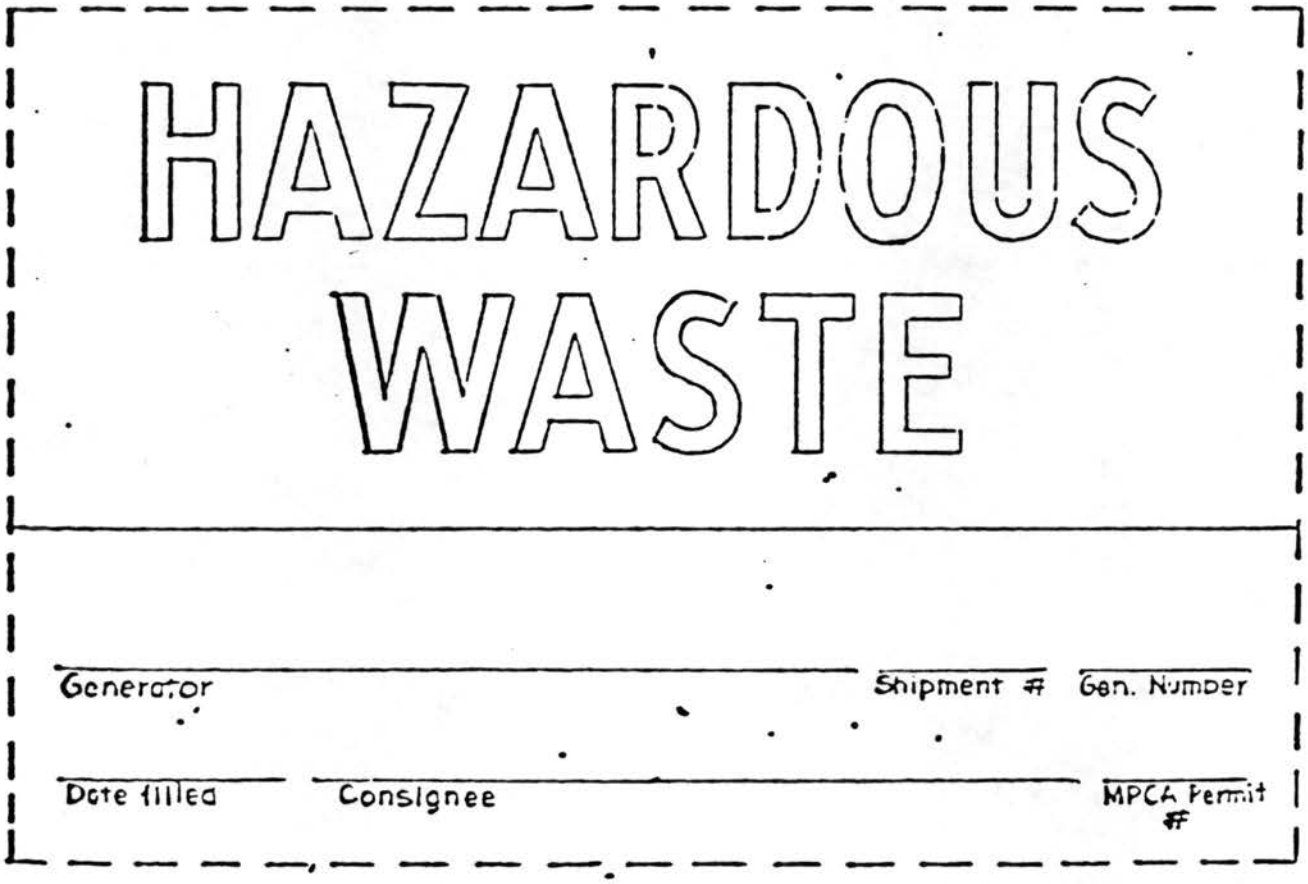

b. The lettering and lines of a "Hazardous Waste" label shall be black and the background color shall be a standard fluorescent pink.

c. In addition to the words, "Hazardous Waste", the label placed on portable tanks and containers shall contain the following information:

(1) The name of the generator.

(2) The identifying shipment number from the shipping papers required in HW 8.

(3) The date the container or portable tank was finally filled.

(4) The name of the hazardous waste facility that is responsible for the ultimate disposition of the hazardous waste and the permit number if that facility is licensed by the Agency pursuant to these regulations.

d. The "Hazardous Waste" label must be capable of withstanding open weather exposure for no less that thirty (30) days without substantial reduction in effectiveness.

2. The container or portable tank shall be labeled and marked in a manner that is suitable for interstate commerce.

3. Any generator or other person who maintains a storage tank containing hazardous waste shall attach a "Hazardous Waste" label to the storage tank in a legible and conspicuous manner. A "Hazardous Waste" label shall be plainly visible and legible to any person who may operate any outlet valve.

H. Containers and Tanks. Each generator shall put hazardous waste only into containers or tanks that comply with the requirements of HW 4 for storage of hazardous waste in containers and tanks at hazardous waste facilities.

I. Proper Hazardous Waste Management. No generator shall relinquish control of a hazardous waste when the generator has reason to believe that the hazardous waste is not being properly managed. Nothing in this regulation is intended to restrict or enlarge or affect in any way, any liability the generator may have to correct the mismanagement of the hazardous waste or pay

for damages or alleviate any pollution caused by the mismanagement of the hazardous waste.

HW 4 LOCATION, OPERATION, AND CLOSURE OF A HAZARDOUS WASTE FACILITY

A. Applicability.

This regulation establishes criteria for the location, operation, and closure of a hazardous waste facility. This regulation, however, does not apply to a waste water treatment works that is operated pursuant to an NPDES Permit or State Disposal Permit.

B. Hazardous Waste Facility Location.

1. No person shall establish, construct, or operate a hazardous waste facility in a wetland, in a floodplain, or within shoreland.

2. No person shall establish, construct, or operate a hazardous waste facility in a location where the topography, geology, hydrology, or soil is unsuitable for the protection of the groundwater and the surface water.

3. No person shall establish, construct or operate a hazardous waste facility in a location where such activity would result in emissions of air contaminants causing the violation of the ambient air quality standards established in Minn. Reg. APC 1.

C. Hazardous Waste Facility Operation.

1. General. No person shall operate a hazardous waste facility except in conformance with the following requirements:

a. The facility operator shall prepare procedures for personnel to follow in the case of spills of hazardous waste and in the case of fire and other emergencies. The facility operator shall post these procedures in a conspicuous place at the facility site.

b. The facility operator shall have safety equipment available at the facility site for use during spills, fires, and other emergencies.

c. The facility operator shall have available at all times written procedures for handling spills, fires, and other emergencies. The facility operator shall train and instruct all personnel at the facility site in these procedures. The facility operator shall maintain records of the training and instruction programs that are held.

d. The facility operator shall construct and begin operating a site monitoring system that is approved by the Agency as adequate to determine the effect of the facility on the soil, groundwater, and air before accepting or storing any hazardous waste at the facility.

e. The facility operator shall control access to the facility by the use of fences, gates, locks and other similar methods and allow access only to persons who are knowledgeable in the safety and emergency procedures needed for handling the hazardous waste. The facility operator shall provide security against unauthorized entry onto the site.

f. The facility operator shall have communication equipment available at the site for summoning aid in an emergency.

g. The facility operator shall maintain lighting at the facility in a manner sufficient to ensure safety and proper operation if the facility is operated during hours of darkness.

h. The facility operator shall not allow scavenging at the facility.

i. The facility operator shall prevent the discharge of hazardous waste from the facility to the surface waters or groundwaters of the State. The facility operator shall prevent hazardous waste from entering drains, sewer inlets, storm sewers, sanitary sewers, doorways, vents, tunnels, pipes, windows, or areas with permeable earth or soil floors.

j. The facility operator shall handle shipping papers as provided in HW 8.

k. The facility operator shall not accept waste from outside the State of Minnesota unless specifically authorized to do so by his Hazardous Waste Facility Permit and unless written approval is obtained from the Director. The Director shall approve the acceptance of the waste if the Director determines that:

(1) The hazardous waste is a waste that can be properly managed at the facility, and

(2) The generator has filed a disclosure with the Agency.

The Director shall act on the request as expeditiously as possible.

2. Acceptance of Hazardous Waste.

a. No facility operator shall accept a shipment of hazardous waste that does not meet the following requirements:

(1) The shipping papers are complete.

(2) Each container and portable tank containing hazardous waste is properly labeled.

(3) The shipping papers and the labels are consistent.

b. No facility operator shall accept a shipment of hazardous waste that the facility operator is not allowed to manage under the Hazardous Waste Facility Permit.

c. The facility operator shall schedule the arrival of hazardous waste in a manner that minimizes the potential problem of incompatible wastes coming in contact.

3. Storage of Hazardous Waste in Containers and Tanks.

a. The facility operator shall segregate incompatible wastes stored in containers and tanks to minimize the potential problem of incompatible wastes coming in contact during storage.

b. The facility operator shall regularly inspect all containers and tanks to determine if any leaks have occurred and in the event a leak has occurred, take necessary action pursuant to subparagraph 1.c.

c. The facility operator shall store hazardous waste in containers and tanks in a manner such that the facility operator can locate any shipment of hazardous waste and any hazardous waste from any particular generator stored on the site.

d. The facility operator shall store hazardous waste in containers and tanks that are located out-of-doors only within a liner and dike system which meets the following requirements:

(1) The liner and dike system shall have a permeability rate no greater than 10^{-7} centimeters per second when being subjected to a head of one foot of water and shall be of a composition that will not increase in permeability as a result of contact with the hazardous waste.

(2) The liner and dike system shall be constructed so as to hold a volume equal to the volume of the largest storage tank plus the total capacity of all containers and portable tanks plus one foot of freeboard.

(3) The interface between the dike and underlying liner shall be constructed so as to provide a seal against movement of hazardous waste or solutions thereof.

(4) The dike shall be constructed in a manner that provides necessary ramps for vehicles needing access to the storage areas.

e. The facility operator shall store hazardous waste in containers that are located out-of-doors in a manner that complies with the following requirements:

(1) The facility operator shall stack containers with a capacity of less than 45 gallons in rows no more than 30 feet in length, five feet in width, and six feet in height, unless otherwise stated in the Hazardous Waste Facility Permit.

(2) The facility operator shall store containers with a capacity of 45 gallons or more in rows no more than 30 feet in length and two containers in width and shall not stack the containers, unless otherwise stated in the Hazardous Waste Facility Permit.

(3) The facility operator shall maintain a minimum of five feet between rows of containers of hazardous waste.

(4) If exposure of the containers to moisture or direct sunlight will create a hazardous condition or adversely affect the containers' ability to contain the hazardous waste, the facility operator shall store containers in an area with overhead roofing or other covering that does not obstruct the visibility of the labels.

f. No facility operator shall store hazardous waste in containers and tanks unless the containers and tanks meet the following requirements:

(1) Containers and tanks shall be of sturdy, leak-proof construction. Containers shall be of adequate wall thickness, of adequate weld, hinge, and seam strength, and of sufficient material strength to withstand side and bottom shock, while filled, without impairment of the ability of the container or tank to fully contain the hazardous waste.

(2) Except during filling or emptying, the container or tank shall be securely closed. In the event that state or federal law requires a tank to be vented, the tank shall be equipped with a vapor recovery system; provided that persons who store used crankcase oil in tanks with a capacity of less than 5000 gallons (18,927 liters) shall not be required to equip such tanks with a vapor recovery system.

(3) Lids, caps, hinges, or other closure devices shall be of sufficient strength and construction so that when closed they will withstand dropping, overturning, or other shock without impairment of the container's or tank's ability to fully contain the hazardous waste. Gasketed closures shall be fitted with gaskets of material that is sufficient to prevent leakage and that will not be deteriorated by the contents.

(4) Containers, tanks, and their closures shall be constructed of materials or protected by a liner that will not undergo chemical reaction with the contained waste or with other substances that the container may foreseeably contact if such a reaction may impair the container's or tank's ability to contain the waste.

(5) Corroded or damaged containers or tanks shall not be used to contain hazardous wastes.

(6) Containers and portable tanks of hazardous waste shall be suitable for interstate transportation.

g. Hazardous waste shall not be stored in containers or tanks for more than one year.

4. Reuse of Hazardous Waste Containers.

The facility operator shall handle containers and tanks that have contained hazardous waste in one of the following manners:

a. Rinse, clean, and drain all hazardous waste from the containers and tanks prior to leaving the hazardous waste facility.

b. Manage the containers and tanks as a hazardous waste.

c. Reuse the containers or tanks without rinsing, cleaning, and draining if all of the following conditions are met:

(1) The containers and tanks be used to store or tranport one type of hazardous waste exclusively.

(2) The containers and tanks are closed until reuse.

(3) The containers and tanks be suitable for use in accordance with HW 4.

5. Disposal of Hazardous Waste.

a. The facility operator shall not discharge hazardous waste directly into the saturated zone by such means as injection wells or other devices used for the purposes of injecting materials.

b. The facility operator shall not dispose of hazardous waste by open burning.

c. The facility operator shall not engage in activities that would result in emissions of air contaminants causing the violation of the ambient air quality standards established in Minn. Reg. APC 1.

d. The facility operator shall not dispose of hazardous waste in a manner that contaminates the soil unless such disposal is authorized in a Hazardous Waste Facility Permit.

6. Records and Reports.

a. The facility operator shall submit the site monitoring results to the Agency on a quarterly basis.

b. The facility operator shall file a monthly summary with the Director that identifies the amount of hazardous waste managed, the names of the generators of the hazardous waste, and the identity of the types of hazardous waste managed; provided, however, that a facility operator who is also a generator and manages only its own waste at an on-site facility shall file this summary on a quarterly basis.

c. The facility operator shall maintain a log at the facility site that indicates the date that each shipment arrived, the shipment number, the name of the generator of the shipment, the name of the transporter who delivered the shipment, the location of the shipment at the facility, and the date that the hazardous waste was processed, disposed of, or transported from the facility. The facility operator shall submit the log to the Agency upon the request of the Director.

d. The facility operator shall submit to the Agency the records of personnel training and instruction in the procedures to follow in handling spills, fires, and other emergencies upon the request of the Director.

e. For Hazardous Waste Land Disposal Facilities, the facility operator shall maintain a ledger for each cell containing the names of the generators of the hazardous wastes, the dates of acceptance of each shipment of hazardous waste, the

amount in gallons or tons of each shipment, the shipment numbers, and the chemical composition of each shipment of hazardous waste. The facility operator shall submit the ledger to the Agency at the closure of each cell or upon the request of the Director.

D. Hazardous Waste Facility Closure Other Than Hazardous Waste Land Disposal Facilities.

1. The facility operator shall give the Agency a minimum of ninety (90) days written notice prior to the closing of the facility. The written notice shall include:

a. Anticipated last day of operation;

b. The existing inventory count and the inventory reduction schedule; and

c. A discussion of how conditions of the Hazardous Waste Facility Permit will be met.

2. The facility operator shall remove, before the facility is closed, all hazardous waste from the facility unless otherwise authorized by the Hazardous Waste Facility Permit.

3. The facility operator shall meet the conditions of the facility's Hazardous Waste Facility Permit for closing the facility. This provision shall apply even if the Permit has expired or has been suspended or revoked.

4. The facility operator shall submit certification to the Agency by a registered professional engineer that the facility has been closed in accordance with the requirements of this regulation and the Hazardous Waste Facility Permit.

E. Hazardous Waste Land Disposal Facility Closure.

1. The facility operator shall give the Agency a minimum of one hundred and eighty (180) days written notice prior to closing a Hazardous Waste Land Disposal Facility. The written notice shall include:

a. Anticipated last day of operation;

b. A discussion of how the requirements of this regulation shall be met; and

c. A discussion of how conditions of the Hazardous Waste Facility Permit shall be met.

2. The facility operator shall close the Hazardous Waste Land Disposal Facility in accordance with the following requirements:

a. The facility operator shall close access to the facility and prevent additional waste disposal.

b. The facility operator shall provide, construct, and maintain measures to protect groundwater and surface water and to control air emissions from the facility.

c. The facility operator shall cover the hazardous waste with an adequate amount of cover material to eliminate blowing of the hazardous waste and to minimize leachate production by the hazardous waste.

d. On all areas that have been covered with soil, the facility operator shall cover the area with adequate topsoil and provide vegetation that is sufficient to prevent erosion.

e. The facility operator shall establish and maintain a final grade that promotes surface water runoff without excessive

erosion and shall divert surface water drainage around and away from the disposal area.

f. The facility operator shall construct a groundwater monitoring system, a surface water monitoring system, and, if necessary, a gas monitoring system if such systems are not already installed.

g. The facility operator shall record a detailed description, including a plat, with the county recorder. The description shall include a statement that the site has been used for the disposal of hazardous wastes, the general types and location of wastes, depth of fill, and other information of interest to potential land owners.

h. The facility operator shall file with the Agency and with the appropriate county office a final plot plan and cross sections that delineate the location of each major type of waste disposed of at the facility.

3. The facility operator to whom a Hazardous Waste Facility Permit has been issued shall close the facility as required by the Permit. Such a facility operator shall submit certification to the Agency by a registered professional engineer that the Hazardous Waste Land Disposal Facility has been closed in accordance with the requirements of this regulation and the Hazardous Waste Facility Permit. This provision shall apply even if the Permit has expired or been suspended or revoked.

4. A facility operator who closes a Hazardous Waste Land Disposal Facility shall establish and continue in effect financial

arrangements that are adequate to finance the long-term maintenance, monitoring and surveillance required by this regulation.

F. Long Term Maintenance, Monitoring, and Surveillance of Hazardous Waste Facilities Other Than Hazardous Waste Land Disposal Facilities.

1. A facility operator who closes a hazardous waste facility other than a Hazardous Waste Land Disposal Facility shall conduct such long term maintenance, monitoring, and surveillance of the facility as is necessary to prevent pollution of the air, land, and water resources of the State.

2. The requirements of this regulation shall continue for as long as the hazardous waste poses a threat to the environment, unless the State of Minnesota or the United States agrees to assume responsibility for the long term maintenance, monitoring, and surveillance requirements described herein.

G. Hazardous Waste Land Disposal Facility Long Term Maintenance After Closure.

1. A facility operator who closes a Hazardous Waste Land Disposal Facility shall perform the following long term maintenance, monitoring, and surveillance of the facility:

a. Maintain the impervious liner and final cover.

b. Maintain surface water drainage in a manner that minimizes erosion.

c. Treat contaminated surface water runoff.

d. Collect and treat leachate.

e. Maintain a groundwater monitoring system and a surface

water monitoring system and, if necessary, a gas monitoring system.

f. Remove hazardous waste from the facility or otherwise alleviate the threat in the event the hazardous waste is a threat to air, land, or water resources of the state, or public health or safety. The facility operator shall remove the waste or otherwise alleviate the threat regardless of the cause of the threat.

2. The requirements of this regulation shall continue for as long as the hazardous waste poses a threat to the environment, unless the State of Minnesota or the United States agrees to assume responsibility for the long term maintenance, monitoring, and surveillance requirements described herein.

H. Closure of Unpermitted Hazardous Waste Facilities.

1. The facility operator of a hazardous waste facility that is in operation on the effective date of these regulations who does not apply for a Hazardous Waste Facility Permit pursuant to HW 6 shall close the facility in accordance with the requirements of this regulation.

2. A facility operator who closed or abandoned a Hazardous Waste Land Disposal Facility prior to the effective date of these regulations shall comply with the requirements of this regulation.

I. Small Hazardous Waste Containerized Storage Facilities. The facility operator of a Hazardous Waste Containerized Storage Facility with a capacity of less than 5,000 gallons (18,927 liters) of hazardous waste in containers and tanks shall not be required

to comply with the requirements of subparagraph 1 of paragraph B, of subparagraphs 1.d., 1.f., 2.b., 6.a., 6.b., 6.c., and 6.d. of paragraph C, and subparagraphs 1, 3 and 4 of paragraph D, provided no other hazardous waste facility is located at the same site.

HW 5 TRANSPORTATION OF HAZARDOUS WASTE

A. Applicability. This regulation establishes criteria for the loading and transportation of hazardous waste by any person to insure that hazardous wastes are loaded and transported in a manner which minimizes risks to human health and the environment.

B. Loading of Hazardous Wastes. No person shall load or unload hazardous waste onto or from any motor vehicle, railroad car, barge, airplane or other vehicle except in accordance with the following requirements:

1. All containers of hazardous waste shall be loaded so that they are reasonably secured against movement within the vehicle by which the hazardous waste is being transported.

2. Tank vehicles shall not be left unattended during the loading or unloading of a hazardous waste.

3. No tools or equipment likely to damage the effectiveness of the closure of any container or adversely affect the ability of a container to contain a hazardous waste shall be used for loading or unloading hazardous waste.

4. Hazardous waste and food or fiber intended for human or animal consumption or use shall not be loaded in the same vehicle.

5. Hazardous waste shall not be loaded in the same vehicle with incompatible wastes or other materials with which it is incompatible.

6. Broken or leaking containers of hazardous waste or containers with an outside surface that is contaminated with hazardous waste shall not be loaded or offered for transportation.

7. No container or tank containing hazardous waste shall be loaded on a vehicle unless the container or tank is properly labeled as required by HW 3.

8. No cargo tank or cargo tank compartment shall be loaded with hazardous waste unless it has been tested, inspected, and maintained to insure that there is no unintentional release or leakage of waste during transportation and unless it fulfills the applicable requirements set forth in 49 C.F.R. §177.824 (1976). The person loading the tank or compartment shall be considered to have complied with this provision if the person owning or leasing the cargo tank certifies that all requirements of this provision have been met.

9. No hazardous waste of a type or volume that is beyond the capability of the cargo tank shall be loaded in the cargo tank.

10. No cargo tank shall be loaded unless it is properly labeled as required by HW 3.

11. The hazardous wastes of two or more generators shall not be commingledunless such commingling is indicated on the shipping papers of all of the generators.

12. The hazardous waste shall be transported or given to a transporter as soon as possible after loading.

C. Transportation of Hazardous Waste.

1. The operator of a vehicle transporting hazardous waste shall maintain possession of the hazardous waste shipping papers during transportation as follows:

a. When the vehicle is a motor vehicle and the driver is at the vehicle's controls the shipping papers shall be either:

(1) Within his immediate reach while he is restrained by the lap belt, or

(2) Readily visible to a person entering the driver's compartment or in a folder that is mounted to the inside of the door on the driver's side of the vehicle.

b. When the vehicle is a motor vehicle and the driver is not at the vehicle's controls, the shipping papers shall be displayed as follows:

(1) In a holder that is mounted to the inside of the door on the driver's side of the vehicle, or

(2) On the driver's seat in the vehicle.

c. When the vehicle is a train, a member of the crew shall maintain the shipping papers in the caboose.

d. When the vehicle is other than a motor vehicle or train, the operator of the vehicle shall maintain the shipping papers in an accessible location determined by the operator.

e. If, pursuant to the provisions of HW 8 G., a vehicle operator does not have a copy of the shipping papers in his possession, as required by this section, then the transporter shall maintain the spill information given to him by the generator

pursuant to HW 8 G in such a manner that the information will be available to the vehicle operator as soon as he requests it, or in such other manner that is approved in writing by the Agency.

2. The transporter shall comply with all applicable requirements of HW 8 relating to shipping papers.

3. The transporter shall replace any labels required by HW 3 if they are destroyed, lost or detached.

D. Time in Transit

1. Any person who transports hazardous waste shall deliver the hazardous waste to its final destination as soon as possible after loading of the hazardous waste.

2. In the event that a shipment of hazardous waste is not accepted by the facility operator within 48 hours after arrival at the destination or in the event the facility operator does not sign the hazardous waste shipping papers, the transporter shall immediately return the shipment of hazardous waste to the generator and the generator shall accept it and pay for the return transportation. If the wastes of two or more generators have been commingled as provided in HW 5 B.11., each generator shall accept a portion of the hazardous waste equal to the generator's contributor to the total volume of waste.

E. Spills in Transit. These provisions shall apply to all spills of hazardous wastes while in transit within the State of Minnesota.

1. Any transporter who has a spill or leak of hazardous waste during transit shall comply with the provisions of HW 10.

2. In the case of a spill or leakage of hazardous waste during transit, the amount spilled, the amount recovered, the location of the spill site, and the disposition of the spilled wastes and any contaminated material shall be noted on or attached to the hazardous waste shipping papers by the transporter.

3. The transporter shall notify the generator as soon as possible of any spill or leak during transit.

4. The generator shall maintain a written summary of all spills and leaks that occur during transit for a period of five years.

5. If during the course of transportation, a container is discovered to be broken or leaking, the transporter shall remove the container to the nearest safe location and isolate it pending proper disposition in the safest and most expeditious manner possible. The generator shall render all reasonable assistance to the transporter in repackaging, packing, and cleaning up the waste so that the trip may be resumed. "All reasonable assistance" means providing the transporter with all necessary information about the waste and about procedures for repackaging, packing, and cleaning up the waste and in addition providing any physical assistance that the generator is uniquely suited to provide and that the transporter is willing to bear the costs of. Nothing in this provision is, however, intended to restrict or enlarge or affect in any way any liability the generator may have to

repackage, pack and clean up the waste in the event the transporter does not.

F. Delivery of Hazardous Waste. No person shall deliver hazardous waste to or give hazardous waste to a transporter for shipment to a hazardous waste facility located in the State of Minnesota, if the facility operator has not obtained a Hazardous Waste Facility Permit from the Agency. Nothing in this provision is intended to require the transporter to undertake any evaluation of a waste to determine whether it is hazardous.

G. Registration of Hazardous Waste Transporters. Any person who transports hazardous waste that originates or terminates in Minnesota shall register with the Agency and obtain an identification number prior to transporting the hazardous waste. The transporter may request a particular number when he registers and may obtain that number if it is satisfactory to the Agency. The transporter shall keep the Agency advised of his current address.

H. Transportation of Used Crankcase Oil. A transporter of used crankcase oil shall maintain a log that shows the source and disposition of all used crankcase oil. Upon the written request of the Director, the transporter shall submit any information from the log that the Director requests. The transporter shall retain all information for a period of two years.

HW 6 THE HAZARDOUS WASTE FACILITY PERMIT PROGRAM

A. Applicability. This regulation governs the application procedures, the issuance, and the conditions of a Hazardous Waste Facility Permit. The provisions in this regulation and the Agency's Rules of Procedure, Minnesota Regulations MPCA 1-13, shall be construed to complement each other.

B. Other Permits. Obtaining a Hazardous Waste Facility Permit pursuant to this regulation shall not exempt a person from any requirement to obtain any other applicable federal, state, and local permits.

C. Permit Required. No person shall do any of the following without obtaining a Hazardous Waste Facility Permit from the Agency:

1. Establish, construct, operate, close, or abandon a hazardous waste facility;

2. Make any change in, addition to, or extension of a permitted hazardous waste facility or part thereof;

3. Make any expansion, production increase, or process modification that results in new or increased capabilities of a permitted hazardous waste facility; or

4. Operate such a permitted hazardous waste facility, or part thereof, that has been changed, added to, or extended or that has new or increased capabilities.

D. Submission of Hazardous Waste Facility Permit Application.

1. Any person who is operating a hazardous waste facility on the day these regulations take effect shall submit to the Agency a preliminary application for a hazardous waste facility permit within 180 days of the effective date of these regulations;

except any person who, on the effective date of these regulations, is operating a Hazardous Waste Containerized Storage Facility that is not in the same location as any other type of hazardous waste facility shall submit a preliminary application for a Hazardous Waste Facility Permit for such facility according to the following schedule:

The First Letter in the Name of Applicant	Application Due Date
L-N	10 months after effective date
A-C	12 months after effective date
D-G	14 months after effective date
T-Z	16 months after effective date
O-S	18 months after effective date
H-K	20 months after effective date

2. Any person who has submitted a preliminary application for a Hazardous Waste Facility Permit shall submit a final application after the person has received the Director's comments on the preliminary application.

3. In the event that a person operates hazardous waste facilities at more than one location, a separate application shall be filed by the person for each facility.

4. In the event that a person operates more than one type of hazardous waste facility at one location, then the person shall file a single application containing all the required information for each type of hazardous waste facility that will be at that location.

5. When the application is for a change, addition to, or extension of a permitted hazardous waste facility or part thereof or when the application is for new or increased capabilities at a

permitted hazardous waste facility, the Agency may waive in writing the submission of plans and specifications or any parts thereof.

6. The Agency need not accept a permit application unless the application contains all the information required by these regulations. If a permit application is incomplete or deficient, the Director shall advise the applicant of such incompleteness or deficiency. Further processing of the application may be suspended until the applicant has supplied the necessary information or otherwise corrected the deficiency.

E. Granting and Reissuance of Permits.

1. The Agency shall not grant or reissue a Hazardous Waste Facility Permit unless the Agency determines that the hazardous waste facility and its operation will comply with the requirements of applicable pollution control statutes and regulations.

2. The Agency shall not grant or reissue a Hazardous Waste Facility Permit unless the applicant has established financial arrangements that are adequate to provide for:

a. The proper removal, transportation and disposal of the total amount of hazardous waste that the facility operator will be permitted to store; and

b. The closure of the facility in accordance with these regulations and the conditions of the permit.

c. The long term maintenance, monitoring, and surveillance requirements provided for in these regulations and the conditions of the permit for a Hazardous Waste Land Disposal Facility for a period of thirty (30) years after closure, unless the Agency

determines that a shorter period of time is adequate to determine the long term effect of the facility on the soil, groundwater, and air. Nothing in this regulation, however, shall limit the responsibility of the facility operator to provide maintenance, monitoring, and surveillance for a longer period of time in accordance with HW 4 F.

F. Review of Permits.

1. Any person who wishes to continue to operate a hazardous waste facility shall, at least 180 days before his Hazardous Waste Facility Permit expires, submit a written request to the Agency for reissuance of the permit.

2. The Agency shall review the request for reissuance. In reviewing the request, the Agency shall consider:

a. Whether the permittee is in compliance with or has complied with terms, conditions, requirements, and schedules of compliance of the expiring permit, and with applicable pollution control statutes and regulations, including any additions, revisions or modifications thereto.

b. Whether there have been changes in the state of the art during the term of the permit.

c. Whether the Agency has up-to-date information on the nature of the facility, production levels, the operational practices and monitoring data.

d. Whether any modifications to the permit are necessary. In conducting the review, the Agency may require additional information to be submitted to aid the review.

G. Hazardous Waste Facility Permit General Conditions.

1. All Hazardous Waste Facility Permits shall have the following general conditions:

a. The permittee shall establish, construct, operate, and close the facility in accordance with:

(1) The plans, specifications, and reports identified in the permit;

(2) The Agency's hazardous waste regulations; and

(3) The conditions of the permit issued by the Agency.

b. The permittee shall allow any authorized Agency employee or agent to enter upon any property -- public or private -- to have access to and copy any applicable records, to inspect the hazardous waste facility and its operations, to sample any waste, and otherwise to obtain necessary information pertaining to the construction, operation, and closure of the hazardous waste facility and the hazardous waste managed there.

c. The permittee shall, upon the request of any authorized Agency employee or agent, disclose the times at which any operation occurs.

d. The permittee shall not store volumes of hazardous wastes in excess of the volumes approved by the Agency in the permit.

e. The permittee shall manage only those types of hazardous waste that are approved by the permit.

f. The permit shall have a term not to exceed five years.

2. Hazardous Waste Facility Permits for facilities that existed prior to the effective date of these regulations may in addition, provide interim dates for achievement of compliance with applicable regulations, other relevant laws and conditions of the permit.

3. Hazardous Waste Facility Permits for new facilities shall, in addition, have the following general conditions:

a. The permittee shall not begin operation of the hazardous waste facility until the permittee has submitted a certification by a registered professional engineer that the hazardous waste facility has been constructed according to the engineering plans and specifications as approved, with any modifications, by the permit.

b. The permittee shall construct and commence operation of the facility within the time schedule specified in the permit.

4. If the Hazardous Waste Facility Permit authorizes the permittee to accept hazardous waste from outside the State of Minnesota, the permittee shall not accept the hazardous waste without written approval from the Director.

H. Hazardous Waste Facility Permit Special Conditions. The Agency shall include special permit conditions to restrict the establishment, construction, operation, or closure of a hazardous waste facility whenever the Agency deems such special conditions necessary in order to perform its responsibilities and duties

under its regulations and other relevant laws.

I. Exceptions.

1. A generator who establishes, constructs, operates, or closes an on-site hazardous waste resource recovery facility that is owned by the generator and is operated solely for the purpose of recycling hazardous waste produced by that generator shall not be required to obtain a Hazardous Waste Facility Permit for that facility.

2. The facility operator of a Hazardous Waste Containerized Storage Facility with a capacity of less than 5,000 gallons (18,927 liters) that is not in the same location as any other types of hazardous waste facility shall not be required to obtain a Hazardous Waste Facility Permit for that facility.

3. The facility operator of a waste water treatment works operated pursuant to a National Pollutant Discharge Elimination System Permit or State Disposal Permit shall not be required to obtain a Hazardous Waste Facility Permit for that facility.

4. No person shall be required to obtain a Hazardous Waste Facility Permit for receiving used crankcase oil from other persons for the purpose of supplying that oil to a recycler if the capacity of the facility is less than 5,000 gallons (18,927 liters) and if the used crankcase oil is not mixed with other wastes.

HW 7 CONTENTS OF HAZARDOUS WASTE FACILITY PERMIT APPLICATIONS

A. Applicability. This regulation establishes the information that must be submitted in an application for a Hazardous Waste Facility Permit.

B. Preliminary Application.

1. All Hazardous Waste Facilities. Any person who submits a preliminary application to the Agency for a Hazardous Waste Facility Permit, regardless of the kind of facility, shall provide the following information in the preliminary application:

a. All information required by Minn. Reg. MPCA 5.

b. An area plan having a scale and vertical contour intervals sufficient to show existing surrounding features to within one mile radius, and delineating the following:

(1) County, township, and municipal boundaries.

(2) A north arrow, town, range, and section number.

(3) Surface waters, floodplains, and wetlands.

(4) Boundaries of parks and wildlife refuges.

(5) Highways, roads, and rights of way for railroads, including a designation of the main access to the facility.

(6) Approximate daily utilization of each access route by vehicles transporting hazardous waste.

(7) Surface water drainage patterns and drainage divides with the direction of the drainage denoted by arrows.

(8) Land use patterns and zoning.

(9) Buildings within 1/4 mile of the proposed facility and their apparent uses.

(10) Quarries and gravel pits (active and abandoned).

(11) Major rock outcroppings and fault zones.

(12) Sanitary landfills or dumps (active and abandoned).

(13) The location and surface elevations of all active and abandoned wells within 1/4 mile of the facility.

(14) Any other applicable area features necessary to determine the suitability of the area for the hazardous waste facility.

c. A site plot plan of existing conditions at the location of the proposed facility, with the site plot plan having a scale and vertical contour interval acceptable to the Director, including all land within 1,000 feet of the property lines of the proposed facility, and the following:

(1) County, township, and municipal boundaries.

(2) A north arrow, town, range, and section number.

(3) Zoning and land use patterns.

(4) Surface waters, floodplains, and wetlands.

(5) Highways, roads, and railroads (including rights of way of railroads), including a designation of those that will be utilized as main accesses to the facility.

(6) A conceptual layout of the facility.

(7) Existing and proposed drainage patterns of surface water runoff denoted by arrows.

(8) Sanitary and storm sewers, sewer connections, electric power lines, and underground gas lines serving the facility.

(9) The location and surface elevations of surrounding wells (active and abandoned), on-site soil borings, well installations, and piezometers, all of which shall be tied into a bench mark.

(10) All buildings and their uses.

(11) Existing ground cover vegetation.

(12) Rock outcroppings, sink holes and faults.

(13) The boundary lines and ownership of all property bordering the proposed site of the facility.

(14) Any other site features necessary to determine the suitability of the site for the hazardous waste facility.

d. An estimate of the cost for:

(1) The proper removal, transportation, and disposal of the total amount of hazardous waste that the applicant has requested to store.

(2) The closure of the facility in accordance with these regulations.

2. Hazardous Waste Containerized Storage Facilities, Hazardous Waste Transfer Station Facilities, and Hazardous Waste Processing Facilities. In addition to the information required by subparagraph 1 of this section, any person who submits a preliminary application for a Hazardous Waste Facility Permit for a Hazardous Waste Containerized Storage Facility, a Hazardous Waste Transfer Station,

or a Hazardous Waste Processing Facility shall submit the following additional information:

a. A report that summarizes the available information on the subsurface conditions at the proposed site for the facility and reviews dominant soil types, underlying bedrock, groundwater quality, and the location and depths of all wells within one thousand feet.

b. When required by the Director, a report that summarizes the subsurface field investigations conducted by the applicant to determine the feasibility of the proposed location.

c. An engineering report that conceptually assesses the construction of the facility and any existing construction proposed to be used at the facility.

d. A report that conceptually addresses the operation of the facility including when applicable:

(1) A general description of the waste types proposed to be brought to the facility describing the approximate chemical composition, the hazardous properties, and the estimated quantities that will be handled on a yearly basis.

(2) A discussion of the inventory control procedures to be utilized in managing each waste type at the facility.

(3) A description of any processing including, but not limited to, chemical precipitation, incineration, chemical fixation, blending, or repackaging that is proposed to occur at the facility.

(4) A delineation of the actual or proposed management of the hazardous waste that is brought to the facility and that is subsequently removed from the facility for management elsewhere.

(5) A description of the anticipated air emissions, wastewater effluents, hazardous wastes, and solid wastes that will be produced by the facility.

3. Hazardous Waste Noncontainerized Storage Facilities, Hazardous Waste Land Treatment Facilities, and Hazardous Waste Land Disposal Facilities. In addition to the information required by subparagraph 1 of this section, any person who submits a preliminary application for a Hazardous Waste Facility Permit for a Hazardous Waste Noncontainerized Storage Facility, Hazardous Waste Land Treatment Facility, or Hazardous Waste Land Disposal Facility shall submit the following additional information:

a. A report on the subsurface conditions at the proposed facility based on a field investigation that includes a sufficient number of soil borings, groundwater monitoring wells, and piezometers to accurately investigate subsurface conditions. The location, placement and construction of the soil borings, monitoring wells, and piezometers shall be done in a manner that facilitates the preparation of plot plans and cross sections. The report shall include, unless otherwise specified by the Director:

(1) Logs of borings classified according to ASTM D 2487-69 and ASTM D 2488-69.

(2) A plot plan that delineates the surface of the underlying groundwater, the direction of groundwater flow, perched water tables, recharge and discharge areas, and the location of soil borings, groundwater monitoring wells and piezometers, and the dates of inspection and water levels recorded in establishing the groundwater information listed by each well and piezometer.

(3) The placement and construction of monitoring wells and piezometers.

(4) Cross sections prepared from the field investigation that illustrate soil profile, groundwater aquifers, vertical and horizontal direction of groundwater flow and other significant geological features, and, should the field investigation indicate the need for an investigation of the underlying bedrock, core samples or cuttings taken from borings and rock types adequately defined as to petrology and stratigraphy.

(5) A comparison of the findings of the field investigations with previous research and literature on the subsurface conditions at the site and an explanation of any discrepancies in the findings of the field investigation and previous research.

(6) An estimated water balance for the location of the proposed facility that considers precipitation, drainage, infiltration, exfiltration, percolation, evaporation and runoff.

(7) A section that addresses the porosity and permeability of major soil types that were encountered in the

field investigation, including a description of the procedures used in the testing of the major soil types. The section shall discuss:

(a) The ability of the soil to attenuate the hazardous waste and the leachate thereof through ion exchange, absorption, adsorption, precipitation, and other such mechanisms.

(b) A review of the anticipated products from such mechanisms including both final and intermediate biochemical metabolites and chemical degradation products.

(c) An assessment of how effective the soil attenuation processes will be in providing treatment to the hazardous waste and leachate thereof.

(8) A section that addresses the seasonal fluctuation in groundwater levels, an approximation of the historic high groundwater levels expected based on field investigations, and influences on the groundwater levels by local wells, irrigation, or drainage ditches.

(9) A section on groundwater quality that delineates the natural quality, assesses the potential impact of the hazardous waste to be accepted at the facility and the leachate thereof on groundwater quality, and appraises whether this facility would preclude beneficial present and future uses of the groundwater.

b. An engineering report that conceptually addresses the design of the facility including:

(1) A description of the wastes to be managed at the facility, including the amount, general chemical composition,

and properties of the waste.

(2) Any treatment processes that will be utilized to prepare the waste before land disposal, land treatment, or storage.

(3) A site plot plan that delineates the conceptual engineering plans for the facility.

(4) A section that describes and assesses as applicable:

(a) The preliminary specifications for the liners, the liners currently under consideration, and the individual liners' ability to meet those specifications.

(b) The preliminary specifications for the leachate collection system, the materials currently under consideration, and the ability of those materials to meet the specifications.

(c) The preliminary design criteria for any leachate treatment system being proposed.

(5) A conceptual discussion of the operation of the proposed facility.

c. A report that:

(1) Evaluates the expected effect of the vapors, gases and dusts from the wastes on the air quality at the actual site and in the immediate vicinity of the site.

(2) Appraises the expected subsurface migration of the vapors and gases from the wastes relative to conditions found in the subsurface investigations.

4. Hazardous Waste Land Disposal Facilities. In addition to the information required by subparagraphs 1 and 3 of this section, any person who submits a preliminary application for a Hazardous Waste Facility Permit for a Hazardous Waste Land Disposal Facility shall submit an estimate of the cost of maintenance, monitoring, and surveillance of the facility for a thirty (30) year period after closure of the facility, unless the Agency determines that a shorter period of time is adequate.

C. Final Application.

1. All Hazardous Waste Facilities. Any person who submits a final application to the Agency for a Hazardous Waste Facility Permit, regardless of the kind of facility, shall provide the following information:

a. Any information required to respond to the comments made by the Director on the preliminary application.

b. An engineering report that details the plans and specifications for the construction of the facility, which shall be referenced into the plot plans, including when applicable:

(1) A site plot plan that delineates the final engineering plans for the facility. If the facility involves progressive development of different parts of the area designated for the facility, the applicant shall submit a series of plot plans to illustrate the progressive development of the facility. All site plot plans shall be of sufficient detail, scale, and vertical contour interval to allow for actual construction from the plot plan. The site plot plan shall include:

(a) All information contained on the site plot plan submitted with the preliminary plans and specifications.

(b) A detailed layout of the facility as it is to be built, indicating buildings, fencing, utilities, storage areas, earthwork, and other applicable details.

(c) The location of any air quality, water quality, or groundwater monitoring devices located or proposed to be located at the facility.

(d) Arrows delineating surface water drainage patterns after construction of the proposed facility, including the relationship of the drainage patterns to the runoff containment lagoons.

(2) Specifications for the construction of all storage areas and storage tanks, clearly delineating thickness of liners, liner material, grades, drains, sewer inlets, vehicle ramps, foundation construction, and storage tank construction.

(3) A section on the equipment that will be installed at the facility. The section shall include a discussion of underlying physical principles or chemical reactions, detailed drawings and specifications of all equipment, expected performance data, air emissions data, and the water quality of the wastewater discharge.

(4) A section that delineates the design and specifications for the treatment of contaminated runoff or snow that would arise from the operation of the facility.

c. An operations manual that includes:

(1) A section that delineates procedures, methods, and maintenance that must be done at the facility on a daily or periodic basis to insure proper management of the waste at the facility.

(2) Inventory control procedures to be utilized at the facility to properly manage the waste in inventory, including:

(a) Locations for storage of each waste type, together with a clear delineation of which waste types are not compatible, the recommended maximum times of storage, and the methods for logging shipments into and out of inventory.

(b) Maintenance and inspection schedules for insuring that containers in storage are properly labeled and not leaking.

(3) A thorough description of the type and frequency of inspection or maintenance that shall be done on storage areas, dikes, storage tanks, liners, cover materials, leachate collection systems, any other construction and equipment at the proposed facility.

(4) A monitoring section that describes the procedures to be used and the parameters to be analyzed by the permittee to:

(a) Inventory and identify incoming hazardous waste.

(b) Conduct air and groundwater monitoring programs.

(c) Monitor the management of waste produced

by the operation of the facility.

(5) A section on how to operate and manage holding basins for runoff or contaminated snow that arises from the operation of the facility.

(6) A description of the procedures that shall be employed by the facility personnel in responding to spills or other emergency situations that could arise during facility operation. Specific references shall be made to (a) the training or instruction that the facility personnel shall receive, (b) the on-site emergency and safety equipment, and (c) the arrangements for emergency services.

(7) A section outlining the specific management plan for all residuals and hazardous wastes that arise from the operation of the facility.

d. A closure manual describing the procedures and construction that will be used to close the facility, and the monitoring and maintenance required to be conducted at the facility after closure.

e. A description of the financial arrangements the applicant has made to pay for the following:

(1) The proper removal, transportation, and disposal of the total amount of hazardous waste that the applicant has requested to store.

(2) The closure of the facility in accordance with these regulations.