

Minnesota Attorney General: Administrative Rules Proceedings

Copyright Notice:

This material may be protected by copyright law (U.S. Code, Title 17). Researchers are liable for any infringement. For more information, visit www.mnhs.org/copyright.

Version 3
August 20, 2018

#541 Public Safety / Minimum Standards for Wheel-Chair Securement Devices.

RULES REVIEW CHECKLIST

DATE RULES RECEIVED 9-11-79 Temporary Rule _____

Resubmitted and Received 10-5-79

DUE DATE 10/1/79 - 10-15-79

a. Returned to Agency w/o filing w/Secy of State 9/28
b. Approved 10/9 Date Sent Back to Agency 10/9

- -

1. Rules as Adopted ✓
2. Rules as Proposed ✓
3. Certificate of Board's Authorizing Resolution, where applicable N.A
4. Order for Hearing ✓
5. Notice of Hearing ✓
   (i) Sufficiency ✓
6. Secretary of State's List ✓
7. Certificate of Acquisition of Secretary of State's List ✓
8. Affidavit of Mailing ✓
   (i) At least 30 days prior to hearing ✓
9. Statement of Need and Evidence ✓
10. Hearing Examiner's Report ✓
11. Agency's Findings of Fact ✓
12. Certificate of Board's Resolution Adopting Rules, where applicable N.A
13. Order Adopting ✓
14. Report of Chief Hearing Examiner ✓
    (i) Finding of No Substantial Change ✓
    (ii) Permission to Incorporate by Reference, where applicable ✓
15. Certificate of Compliance with Rulemaking Procedures ✓
16. Copy of Notice of Intent to Solicit Outside Opinion, where applicable ✓
17. Petition by Public, where applicable N.A.

① Why was "invalid" dropped from "Scope" section? p.1 — duplication of stat. lang — crucial?

② p. 2 - F quotes stat. lang. — crucial?

Our File: 541

STATE OF MINNESOTA

DEPARTMENT: Attorney General

Office Memorandum

TO : John P. Sopsic
Commissioner of Public Safety

DATE: 10/9/79

Attn: Diane Hamilton

FROM : Lee E. Sheehy
Special Assistant
Attorney General

PHONE: 296-1238

SUBJECT: Rules as Approved In the Matter of the Proposed Adoption of Rules Governing Wheel Chair Securement Devices.

Enclosed herewith are the rules you have submitted for approval. These rules have been approved by this office and filed with the Secretary of State. Note that they have NOT been filed with the State Register; this must be done promptly by your agency.

Upon receipt and before transmittal to your agency, however, it is important that you recheck these rules as to:

1. Affixation of the stamps of the Attorney General and Secretary of State to the last page of the rules;

2. Coverage by these stamps of all rules submitted; and

3. Inclusion of all pages of the rules in the approved set.

Directly following the approved rules is a complete set of required documents and transcript which must be retained with the rules by you or your agency.

If you have any questions in this regard, please contact me.

LES/dw
Enclosure

cc: Duane Harves
Marshall Whitlock
Melvin Goldberg

w/c

A.G. Copy of Adopted

Department of Public Safety

Safety Administration Division

Adopted Rules

Chapter 21: Standard for Wheelchair Securement Devices

11 MCAR 1.0188 Purpose, ~~AND~~ authority and scope.

A. Purpose. The purpose of these rules is to establish minimum standards for approval of wheelchair securement devices in vehicles and approval of seat belt assemblies and anchorages used to protect persons in wheelchairs while transported in vehicles.

B. Authority. These rules are promulgated pursuant to the authority granted by Laws of 1978, Chapter 752.

C. Scope.

1. These rules apply to the transportation by motor vehicle of any sick, injured, incapacitated or handicapped person while occupying a wheelchair, which transportation is offered or provided by an operator to the public or to its employees or in connection with any other service offered by the operator including schooling or nursing homes, convalescent or child care services.

2. These rules do not apply to any school bus subject to regular school bus inspection pursuant to Minn. Stat. 169.451 nor do they apply to incidental transportation of an occupied wheelchair under circumstances other than as provided in Paragraph (1) above.

11 MCAR 1.0189 Definitions.

For the purpose of these rules, the following terms shall have the meanings ascribed to them:

A. Anchorage. The provision for transferring wheelchair securement loads to the vehicle structure.

B. Commissioner. The Commissioner of Public Safety or his duly authorized agent.

C. Interior Paneling. Material used to finish the interior of a vehicle, not including the floor.

D. Occupant Restraint. A seat belt assembly and/or upper torso restraint intended to hold the occupant of a wheelchair in a generally seated position during transportation by motor vehicle.

E. Wheelchair. A chair mounted on wheels to facilitate the mobility of a sick, injured, invalid or handicapped person in a generally seated position. The term includes a device generally recognized as a wheelchair even though equipped with reclining backrest or special apparatus. The term does not include any device not equipped with wheels, nor does it include an ambulance stretcher or cot whether equipped with wheels or not.

F. Operator. Any person, firm, partnership, corporation, service club, public or private agency, city, town or county.

~~D.~~ G. Wheelchair Securement Device or Securement Device. An apparatus installed in a motor vehicle for the purpose of securing an occupied wheelchair into a location in the vehicle.

11 MCAR 1.0190 Wheelchair securement.

A. An occupied wheelchair transported in a vehicle shall be secured with a securement device of sufficient strength to prevent forward, backward, lateral or vertical movement of the wheelchair when the device is engaged and the vehicle is in motion, accelerating or braking.

B. Each wheelchair securement device shall attach to the frame of the wheelchair without damaging the frame. "Damage" includes effects harmful to the strength, integrity or serviceableness of the wheelchair, but does not include minor dents, scratches or other cosmetic blemishes not materially affecting serviceableness.

In HE Rept.

C. A wheelchair securement device shall not be attached to a wheel of a wheelchair.

11 MCAR 1.0191 Minimum standards.

Each wheelchair securement device shall:

A. Attach to the wheelchair frame on at least three (3) points. The three (3) points of contact shall be spaced to provide effective securement. Alternatively, a securement device meeting all other requirements of these rules may attach to two widely spaced points on the wheelchair frame if the wheel tires or the wheelchair frame abuts an unyielding surface in a manner which meets the approval requirements of 11 MCAR 1.0192.

B. Consist of at least two (2) webbing - type belts described in clause (1) or at least two (2) all-metal devices described in clause (2) or one or more of each such device.

1. Webbing-type devices shall be assemblies that meet or exceed Type 2 pelvic restraint seat belt requirements as specified in Section S4.2 (2) (b) of Federal Motor Vehicle Safety Standard No. 209, 49 Code of Federal Regulations, Part 571.209 (1977 edition) or be certified by the manufacturer that such device meets or exceeds assembly strength of 5,000 pounds in loop fashion or 2,500 pounds on each anchorage leg.

12 HE Rept

a. Certification may be the specification listed in catalogs or publications by the manufacturer.

b. All new construction of such securement devices and repairs to webbing shall conform with standards established by the manufacturer of the webbing.

2. All metal securement devices shall be of a design and construction which provides wheelchair securement strength at least equal to the strength of a webbing-type device comprised of three separate attachments and anchorages.

C. Be free of sharp edges, corners and jagged projections to minimize injury to persons in the event of unintentional contact.

D. Be capable of retraction, and be readily removable or otherwise suitably storable when not in use.

E. Be anchored to the vehicle at not less than two separate points with bolts, nuts and lock washers or self-locking nuts.

1. Bolts used shall be not less than 3/8 inch in diameter and of National Fine Thread S.A.E. grade 5 designation or equivalent.
2. Where anchorage bolts do not pierce the vehicle frame, subframe, bodypost or equivalent metal structure, a metal reinforcement plate or washer not less than 1/16 inches thick by 2 1/2 inches in diameter is required.
3. In no event shall interior paneling constitute anchorage for a point of securement.
4. A metal track, rail or similar device permitting attachment of the securement device at optional points thereon may be used to anchor the securement device, provided:
   a. The track, rail or other device is secured to the vehicle in compliance with anchorage requirements of this rule.
   b. The attachment of the securement device to the anchor point is by means of a positive attachment metal fitting.

F. The method or device which provides attachment of the securement device to the wheelchair frame and the method or device locking the securement device in the load-holding mode shall each be of a strength and design which will assure performance of their intended function until the securement device is intentionally released.

G. Buckles, anchorage fittings and other components essential to the functioning of the securement device shall be integrated into the securement device in accordance with recognized practices and in a manner which preserves the overall strength of the securement device.

11 MCAR 1.0192 Approval procedure.

A. Application for approval of a wheelchair securement device shall be made to the Commissioner and shall be accompanied by the manufacturer's actual or proposed written installation instructions and photographs or drawings

clearly depicting the construction of the device and its physical characteristics, including all mounting hardware.

B. The applicant shall furnish a vehicle with the securement device installed therein and demonstrate the device by attaching it to a wheelchair furnished by the applicant. ~~The wheelchair shall not be modified to accomodate the securement device.~~ The Commissioner may load the wheelchair to 140 pounds and require the vehicle be accelerated, driven around corners and subjected to hard braking at speeds of thirty miles per hour or less. Movement of the wheelchair more than (1) inch in any direction, including vertically, during such test shall be grounds for refusal of approval. Measurement of movement shall be at the points where wheelchair wheels contact the floor. Damage to the wheelchair or any other property during such test shall be the responsibility of the applicant.

C. Upon determining that the securement device meets the requirements of these rules, the Commissioner shall issue a certificate of approval authorizing use of the device. ~~The approval shall expire five years from the date of issuance. A securement device installed in a vehicle during the life of the approval may be used throughout its useful life in any vehicle.~~

D. The Commissioner may revoke any approval granted hereunder upon a showing that the securement device does not meet a requirement of these rules.

E. Each wheelchair securement device shall be permanently labeled with the name, initials or trademark of the manufacturer and the model designation of the device. The label shall be readily visible and legible from the outside of the device when it is properly mounted to the vehicle and in use.

11 MCAR 1.0193 ~~Seat-belts~~ Occupant Restraint.

A. ~~Each-vehicle-equipped-with-a-wheelchair-securement-device-installed after-October-1,-1979,-shall-be-equipped-with-a-type-2-seat-belt-assembly with-a-detachable-upper-torso-portion-at-each-such-wheelchair-position-in the-vehicle.--The-seat-belt-assembly,-the-upper-torso-restraint,-and-the anchorages-for-both-shall-meet-the-requirements-of-applicable-Federal Motor-Vehicle-Safety-Standards.~~ Each vehicle equipped with a wheelchair securement device shall be equipped with a Type 2 seat belt assembly with a detachable upper torso portion at each wheelchair position in the vehicle or, in the alternative, shall be equipped with a Type 1 pelvic restraint assembly and a length of Type 1 or Type 2 seat belt webbing, with buckle, adequate to encircle the chest of the wheelchair occupant and the backrest of the wheelchair.

B. ~~Each-vehicle-equipped-with-a-securement-device-installed-prior-to-October-1, 1979,-shall-be-equipped-with-a-type-1-or-type-2-seat-belt-assembly-at-each such-wheelchair-position-in-the-vehicle.--The-seat-belt-assembly,-and the-upper-torso-restraint-if-so-equipped,-and-their-respective-anchorages shall-meet-the-requirements-of-applicable-Federal-Motor-Vehicle-Standards.~~ Type 1 and Type 2 seat belt assemblies shall meet the requirements of Sections S 1 through S 4.4 of Federal Motor Vehicle Safety Standard No. 209,49 Code of Federal Regulations, Part 571.209 (1977 edition).

C. Type 1 and Type 2 seat belt assemblies and the detachable upper torso restraint, if a detachable upper torso restraint is installed in lieu of using a length of seat belt webbing to encircle the chest of the occupant and the backrest of the wheelchair, shall be installed and anchored in accordance with Sections S 1 through S 4.3.2 of Federal Motor Vehicle Safety Standard No. 210, 49 Code of Federal Regulations, Part 571.210 (1977 edition).

11 MCAR 1.0194 Securement.

It shall be the responsibility of the driver of any vehicle equipped with a wheelchair securement device to:

A. Properly secure an occupied wheelchair prior to moving the vehicle unless the wheelchair occupant is capable of securing the device and does so.

B. Fasten the seat belt assembly, and upper torso restraint if so equipped, around the occupant of the wheelchair unless the occupant is capable of fastening same and does so. The driver shall not fasten the seat belt assembly or the upper torso restraint ~~if doing so would aggravate a physical condition of the occupant.~~ if the occupant or other responsible person advises the driver that to do so would aggravate a physical condition of the occupant. In the event the physical condition would be aggravated by the use of but one of the devices, the device which would have no effect on the physical condition shall be fastened in the required manner.

C. Retract, remove or otherwise store securement devices and seat belt assemblies when not in use to prevent tripping of persons and damage to devices.

11 MCAR 1.0195 Inspection.

The Commissioner may order the removal or ~~corrective action~~ correction of any securement device upon determining that ~~any wheelchair securement~~ the device, without regard to date of installation:

A. Is not capable of sustaining loads imposed thereon in restraining an occupied wheelchair, or

B. The securement device permits excessive movement of an occupied wheelchair.

11 MCAR 1.0196 Effective dates.

~~These rules apply to all securement devices installed in a vehicle after October 1, 1979, and to any securement devices used in any vehicle after December 31, 1980.~~

A. Wheelchair securement devices and occupant restraint systems installed in vehicles after December 31, 1979 must be of a type approved in accordance with these rules. After December 31, 1980, every vehicle included within the scope of these rules must be equipped with an approved wheelchair securement device and occupant restraint system at each wheelchair position.

B. From the effective date of these rules and until an approved wheelchair securement device is installed in a vehicle, no person shall transport an occupied wheelchair in a vehicle unless the wheelchair is secured to prevent forward, backward, lateral or vertical movement when the vehicle is in motion, accelerating or braking, and the occupant is restrained by at least one belt or strap.

APPROVED AS TO FORM AND LEGALITY
OCT. 9 1979 19
WARREN SPANNAUS, ATTORNEY GENERAL
BY
SPECIAL ASSISTANT ATTORNEY GENERAL

STATE OF MINNESOTA
DEPARTMENT OF STATE
FILED
OCT - 9 1979
Joan Anderson Growe
Secretary of State

3,457 M

STATE OF MINNESOTA
OFFICE OF HEARING EXAMINERS

FOR THE DEPARTMENT OF PUBLIC SAFETY

In the Matter of the Proposed Adoption of Rules of the State Department of Public Safety Governing Minimum Standards for Wheelchair Securement Devices.

AMENDMENT TO REPORT OF THE HEARING EXAMINER

ADD FINDING

17. Subsequent to receipt of the Hearing Examiner's Report on this matter, the Department amended 11 MCAR Sec. 1.0188 C.1. and Sec. 1.0189 F. by duplicating statutory language contained in Minn. Stat. Sec. 299A.11(c) and Sec. 299A.11(b), respectively. These amendments were made because of expressed confusion by the public at hearing as to the rule's applicability. As amended, these sections more clearly set forth the actual scope and coverage of the proposed rules. The Hearing Examiner finds that this duplication of statutory language is crucial to the ability of a person affected by the rule to comprehend its meaning and effect.

Dated: September 28, 1979.

Peter C. Erickson

PETER C. ERICKSON
Hearing Examiner

M E M O R A N D U M

Minn. Stat. Sec. 15.0412, subd. 1, states that, "No agency shall adopt a rule which duplicates language contained in Minnesota Statutes unless the Hearing Examiner determines that duplication of the language is crucial to the ability of a person affected by a rule to comprehend its meaning and effect." This statutory requirement assumes that as part of the hearing process and as part of the Hearing Examiner's Report, such a determination will be made based upon a set of proposed rules and public comment. Such was not the case herein.

As the additional Finding states, the Department did not propose the amended language at hearing or in written comments received after the hearing. The Department, upon its own initiative, sought to eliminate an area of confusion by duplicating statutory language in the proposed rules.

(See, Order Adopting Rules, Findings 1 and 2) Consequently, this Examiner had no opportunity to determine whether or not that duplication was "crucial" prior to the agency taking final action.

The result has been a resubmission to this Examiner after final agency action; after a finding of no substantial change by the Chief Hearing Examiner; and after submission to the Attorney General's Office for final review. Such a procedure is cumbersome. To avoid this problem in the future, perhaps a checklist should be devised so that an agency will be on notice if it amends its rules with language not considered at hearing that further action by the Hearing Examiner may be required (e.g., duplication of statutory language or incorporation by reference). This could all be handled when the adopted rules are submitted to the Chief Hearing Examiner for a no substantial change review.

P.C.E.

DPS-79-002-PE

STATE OF MINNESOTA
OFFICE OF HEARING EXAMINERS

FOR THE DEPARTMENT OF PUBLIC SAFETY

IN THE MATTER OF THE PROPOSED ADOPTION OF RULES OF THE STATE DEPARTMENT OF PUBLIC SAFETY GOVERNING MINIMUM STANDARDS FOR WHEELCHAIR SECUREMENT DEVICES.

REPORT OF THE CHIEF HEARING EXAMINER

WHEREAS, a hearing was held on May 17, 1979, before Peter C. Erickson, a Hearing Examiner of the State Office of Hearing Examiners, on the above-entitled matter in compliance with Minn. Stat. § 15.0412, subd. 4; and

WHEREAS, the Report of the Hearing Examiner made pursuant to Minn. Stat. § 15.052, subd. 3, was issued to the Department of Public Safety on June 25, 1979; and

WHEREAS, the Department of Public Safety has now determined to adopt rules pursuant to Minn. Stat. § 15.0412, subd. 4; and

WHEREAS, the Department of Public Safety has submitted said rules to the Chief Hearing Examiner for review pursuant to Minn. Stat. § 15.052, subd. 4, and 9 MCAR § 2.110; and

WHEREAS, the Chief Hearing Examiner finds that the final proposed rules are not substantially different from those proposed at the public hearing and that the Department of Public Safety has met all requirements of Minn. Stat. § 15.0412, subd. 4.

NOW, THEREFORE, upon receipt of this Report, the Department of Public Safety has the responsibility of submitting the complete hearing record and the rules as adopted by the Department to the Attorney General, notifying all persons who requested to be informed that the hearing record has been submitted to the Attorney General, and publishing in the State Register, all pursuant to Minn. Stat. § 15.0412, subd. 4.

Dated this 6th day of September, 1979.

Duane R. Harves

DUANE R. HARVES
Chief Hearing Examiner

ADMIN 1000 (Rev. 1/78)
SF-00006-01

STATE OF MINNESOTA

DEPARTMENT ATTORNEY GENERAL

Office Memorandum

TO : JOHN P. SOPSIC
Commissioner of Public Safety

DATE: 9/24/79

Attention: Diane Hamilton

FROM : LEE E. SHEEHY
Special Assistant
Attorney General

PHONE: 296-1288

SUBJECT: In the Matter of the Proposed Adoption of Rules Governing Wheel Chair Securement Devices.

The above-captioned rules have not been approved by this office for the below-enumerated reasons. After agency consideration of these reasons and appropriate action, if any, the rules may be returned to this office. At that time, please insure that the original of the Order Adopting and Rules as Adopted which are necessary to file with the Secretary of State are enclosed with the resubmitted documents.

The above-capeioned rules are not approved for the following reason:

Minn. Stat. § 15.0412, subd. 1, prohibits an agency from duplicating statutory language unless the hearing Examiner determines the duplication of languages "crutial to the ability of a person affected by the rule to comprehend its immediate effect." 11 MCAR 1.0188 C (1) duplicates statutory language with the exception of excluding the word "invalid" from the listing found in Minn. Stat. § 299 A. 11 (c). Such duplication of statutory language must be found to be "crutial" by the Hearing Examiner. A similar problem exists for 11 MCAR 1.0189 F.

If you have any questions, do not hesitate to contact me.

LES/bw
cc: John Murphy
Duane Harves
Marshall Whitlock
Melvin Goldberg

PRINTED ON RECYCLED PAPER

LCRAR

Marshall R. Whitlock
Executive Secretary

RECEIVED
MAY 7 1979
OFFICE OF HEARING
EXAMINERS

Legislative Commission to
Review Administrative Rules

May 4, 1979

Mr. Peter Erickson
Hearing Examiner
Office of Hearing Examiners
State of Minnesota
1745 University Avenue, Suite 300
St. Paul, Minnesota 55104

RE: PROPOSED RULES FOR THE DEPARTMENT OF PUBLIC SAFETY GOVERNING STANDARDS FOR WHEELCHAIR SECUREMENT DEVICES

The attached letter from my office to the State Highway Patrol deals with a number of issues relative to the proposed rules by the Department of Public Safety on wheelchair securement devices. Please enter that letter into the hearing record.

I will be attending the hearing so as to monitor the proposed rules as they are revised after the hearing, and to report back to Sen. Gunderson, Rep. Berkelman (the two chief authors of the bills delegating rule making authority to the Department of Public Safety in this area). At the hearing, I will be available if you or the department have any questions with regard to the substance of that April 3, 1979 letter.

Sincerely yours,

Marshall Whitlock

Marshall R. Whitlock
Executive Secretary,
Minnesota Legislative
Commission to Review
Administrative Rules

Room 433 SW, State Office Building • St. Paul, Minnesota 55155 • (612) 296-1143

LCRAR

RECEIVED
MAY 7 1979
OFFICE OF HEARING EXAMINERS

Legislative Commission to Review Administrative Rules

Marshall R. Whitlock
Executive Secretary

April 3, 1979

MEMORANDUM

TO: Major Richard Lueck
State Highway Patrol

FROM: Marshall R. Whitlock
Executive Secretary,
Legislative Commission
to Review Administrative Rules

RE: Standards for Wheelchair Securement Devices

Alan Williams, Senate Counsel, and I had an opportunity recently to review the draft rules of the Department of Public Safety governing wheelchair securement devices. After a discussion of the purposes of the rules and the language which was contained in your draft, it was clear that some elements needed clarification and further analysis. This memorandum has been prepared in an effort to give you some further direction as to subsequent revisions to that draft rule.

page 2: "each wheelchair securement device shall attach to the frame of the wheelchair without damaging the frame." It might be appropriate to define "damage" so as to prevent confusion and possible litigation over this subject. Does damage include scratching the frame, or does it involve bending the frame beyond a certain degree?

page 2: In part B (1) you refer to "federal regulations." This is ambiguous, and needs more specificity. When referring to federal regulations, cite the rule or rules in particular by their CFR number. Otherwise, the reference might be ruled as inappropriate by the hearing examiner and the attorney general's office.

page 5: "meet the requirements of applicable Federal Motor Vehicle Safety Standards." In order to meet the requirements of the hearing examiner's office and the attorney general's office, you must cite the standards by their date of issuance (i.e. Motor Vehicle Safety Standards, 1978 edition). If you can, be more specific as to the actual portions of those standards which should apply to seat belt assemblies.

page 6: Inspection section. This portion of the rule does not specify who will do the inspections and the timing of the inspections. Also, it is important to include detail on the notice aspects of inspections (i.e. how will permittees be informed of inspections, etc).

Do you plan on having potential applicants register the fact that they transport handicapped persons or others in wheelchairs at vehicle registration time? This might provide the department with the information on who should register their vehicles and who should be inspected for compliance with the law. It might be appropriate, therefore, to add a section on registration. This would serve to meet the intent of the law by providing the department with the means to assess compliance.

Also, it might be helpful if there are two types of certificates of approval. On page 4 of your draft, you include a certificate of approval authorizing use of the device. It might be appropriate and reasonable to require that each vehicle with a device approved by the department be issued a certificate label to be placed on the outside of the vehicle, similar to other types of certificates. This would give the patrol the ability to assess compliance during routine patrol duty and during safety inspections on the road. Thus, the permittee would have a certificate somewhere in his posession as well as a label on his vehicle.

On page 4 of the draft rule there is a section devoted to a certificate of approval "authorizing use of the device. The approval shall expire five years from the date of issuance." What is the renewal procedure? That should be included in the rule. Does the language of the rule imply that the device is not usable past five years, or does it mean that renewal approval is required, including re-inspection? The language is not clear, and should be re-drafted.

PHASING IN THE RULES

I have been in contact with Mr. Michael Miles, of the Attorney General's staff, with regard to the question of whether phasing in the rules, as described in your draft, is permissible. Also, we discussed the effective date of the required rules. While Mr. Miles could not give a guarantee as to his office granting the final approval to the rules, it is evident from our discussion that your draft appears to be reasonable and in keeping with legislative direction.

The Laws of Minnesota for 1978, chapter 753, Section 8 specifies that you must, "no later than July 1, 1979" adopt rules. It is my opinion, and one shared by Mr. Miles, that such language is directory only. Since the intent of the legislature was to demand quick action so as to get some rules implemented, it would not make sense to argue that the language "no later than July 1, 1979" mandates that rules be in effect on that date, and that if they are not, any rules developed after that date have no effect. Obviously the law does not allow the department to take an unreasonable length of time, such as three years, to develop such rules, however if you can get some rules implemented by August or soon after, it should meet the intent of the legislature.

Your draft indicates that the rules will apply to "all securement devices installed in a vehicle after October 1, 1979, and to any securement device used in any vehicle after December 31, 1980." I discussed this phasing in with Mr. Miles, and we agree that the language seems to be permissible. Since retrofitting will take some time, and since the law mandates a misdemeanor penalty, it appears to me that you can document the need for and reasonableness of allowing such a phase in approach. As long as you can establish the need for and reasonableness of the minimum standards as described on page 2, as having met legislative intent, then you should have no great problems with the approach you have taken.

If you need additional information on the points raised in this memorandum, or need additional direction, feel free to contact Mr. Williams or myself. If we can avoid problems at this stage by smoothing out any rough edges in the rules, then the rules should have a smoother time when it goes to public hearing.

cc: Sen. Gunderson
Alan Williams

PROPOSED RULES

MINNESOTA DEPARTMENT OF PUBLIC SAFETY
SAFETY ADMINISTRATION DIVISION

Chapter 21 : Standard For Wheelchair Securement Devices

11 MCAR 1.0188 PURPOSE AND AUTHORITY

A. Purpose: The purpose of these rules is to establish minimum standards for approval of wheelchair securement devices in vehicles and approval of seat belt assemblies and anchorages used to protect persons in wheelchairs while transported in vehicles.

B. Authority: These rules are promulgated pursuant to the authority granted by Laws 1978, Chapter 752.

11 MCAR 1.0189 DEFINITIONS

For the purpose of these rules, the following terms shall have the meanings ascribed to them:

A. Anchorage. The provision for transferring wheelchair securement loads to the vehicle structure.

B. Commissioner. The Commissioner of Public Safety or his duly authorized agent.

C. Interior Paneling. Material used to finish the interior of a vehicle, not including the floor.

D. Wheelchair Securement Device or Securement Device. An apparatus installed in a motor vehicle for the purpose of securing an occupied wheelchair into a location in the vehicle.

11 MCAR 1.0190 WHEELCHAIR SECUREMENT

A. An occupied wheelchair transported in a vehicle shall be secured with a securement device of sufficient strength to prevent forward, backward, lateral or vertical movement of

the wheelchair when the device is engaged and the vehicle is in motion, accelerating or braking.

B. Each wheelchair securement device shall attach to the frame of the wheelchair without damaging the frame.

C. A wheelchair securement device shall not be attached to a wheel of a wheelchair.

11 MCAR 1.0191 MINIMUM STANDARDS

Each wheelchair securement device shall:

A. Attach to the wheelchair frame on at least three (3) points. The three (3) points of contact shall be spaced to provide effective securement.

B. Consist of at least two (2) webbing - type belts described in clause (1) or at least two (2) all-metal devices described in clause (2) or one or more of each such device.

(1) Webbing type devices shall be assemblies that meet or exceed Type 2 pelvic restraint seat belt requirements as specified in federal regulations or be certified by the manufacturer that such device meets or exceeds assembly strength of 5,000 pounds in loop fashion or 2,500 pounds on each anchorage leg.

(a) Certification may be the specification listed in catalogs or publications by the manufacturer.

(b) All new construction of such securement devices and repairs to webbing shall conform with standards established by the manufacturer of the webbing.

(2) All-metal securement devices shall be of a design and construction which provides wheelchair securement strength

at least equal to the strength of a webbing type device comprised of three separate attachments and anchorages.

C. Be free of sharp edges, corners and jagged projections to minimize injury to persons in the event of unintentional contact.

D. Be capable of retraction, and be readily removable or otherwise suitably storeable when not in use.

E. Be anchored to the vehicle at not less than two separate points with bolts, nuts and lock washers or self-locking nuts.

(1) Bolts used shall be not less than 3/8 inch in diameter and of National Fine Thread SAE grade 5 designation or equivalent.

(2) Where anchorage bolts do not pierce the vehicle frame, subframe, bodypost or equivalent metal structure, a metal reinforcement plate or washer not less than 1/16 inches thick by 2 1/2 inches in diameter is required.

(3) In no event shall interior paneling constitute anchorage for a point of securement.

(4) A metal track, rail or similar device permitting attachment of the securement device at optional points thereon may be used to anchor the securement device, provided:

(a) The track, rail or other device is secured to the vehicle in complaince with anchorage requirements of this rule.

(b) The attachment of the securement device to the anchor point is by means of a positive attachment metal fitting.

11 MCAR 1.0192 APPROVAL PROCEDURE

A. Application for approval of a wheelchair securement device shall be made to the commissioner and shall be accompanied

by the manufacturer's actual or proposed written installation instructions and photographs or drawings clearly depicting the construction of the device and its physical characteristics, including all mounting hardware.

B. The applicant shall furnish a vehicle with the securement device installed therein and demonstrate the device by attaching it to a wheelchair furnished by the applicant. The wheelchair shall not be modified to accomodate the securement device. The commissioner may load the wheelchair to 140 pounds and require the vehicle be accelerated, driven around corners and subjected to hard braking at speeds of thirty miles per hour or less. Movement of the wheelchair more than one (1) inch in any direction, including vertically, during such test shall be grounds for refusal of approval. Measurement of movement shall be at the points where wheechair wheels contact the floor. Damage to the wheelchair or any other property during such test shall be the responsibility of the applicant.

C. Upon determining that the securement device meets the requirements of these rules, the commissioner shall issue a certificate of approval authorizing use of the device. The approval shall expire five years from the date of issuance. A securement device installed in a vehicle during the life of the approval may be used throughout its useful life in any vehicle.

D. The commissioner may revoke any approval granted hereunder upon a showing that the securement device does not meet a requirement of these rules.

E. Each wheelchair securement device shall be permanently labeled

with the name, initials, or trademark of the manufacturer and the model designation of the device. The label shall be readily visible and legible from the outside of the device when it is properly mounted to the vehicle and in use.

11 MCAR 1.0193 SEAT BELTS

A. Each vehicle equipped with a wheel chair securement deivce installed after October 1, 1979, shall be equipped with a type 2 seat belt assembly with a detachable upper torso portion at each such wheelchair position in the vehicle. The seat belt assembly, the upper torso restraint, and the anchorages for both shall meet the requirements of applicable Federal Motor Vehicle Safety Standards.

B. Each vehicle equipped with a securement device installed prior to October 1, 1979, shall be equipped with a type 1 or type 2 seat belt assembly at each such wheelchair position in the vehicle. The seat belt assembly, and the upper torso restraint if so equipped, and their respective anchorages shall meet the requirements of applicable Federal Motor Vehicle Standards.

11 MCAR 1.0194 SECUREMENT

It shall be the responsibility of the driver of any vehicle equipped with a wheelchair securement device to:

A. Properly secure an occupied wheelchair prior to moving the vehicle unless the wheelchair occupant is capable of securing the device and does so.

B. Fasten the seat belt assembly, and upper torso

restraint if so equipped, around the occupant of the wheelchair unless the occupant is capable of fastening same and does so. The driver shall not fasten the assembly if doing so would aggravate a physical condition of the occupant.

C. Retract, remove or otherwise store securement devices and seat belt assemblies when not in use to prevent tripping of persons and damage to devices.

11 MCAR 1.0195 INSPECTION

The commissioner may order the removal or corrective action upon determining that any wheelchair securement device without regard to date of installation.

A. Is not capable of sustaining loads imposed thereon in restraining an occupied wheelchair, or

B. The securement device permits excessive movement of an occupied wheelchair.

11 MCAR 1.0196 EFFECTIVE DATES

These rules apply to all securement devices installed in a vehicle after October 1, 1979, and to any securement device used in any vehicle after December 31, 1980.

The department of public safety amends the proposed Rules governing Minimum Standards for Wheelchair Securement Devices as follows: (Amended language is ~~stricken~~, new language is underlined.)

Rule 11 MCAR, Section 1.0190, Paragraph B is amended by adding a sentence to make Paragraph B read:

B. Each wheelchair securement device shall attach to the frame of the wheelchair without damaging the frame. "Damage" includes effects harmful to the strength, integrity or serviceableness of the wheelchair, but does not include minor dents, scratches or other cosmetic blemishes not materially affecting serviceableness.

Rule 11 MCAR, Section 1.019[redacted] is [redacted] amended by adding two paragraphs to read:

F. The method or device which provides attachment of the securement device to the wheelchair frame and the method or device locking the securement device in the load-holding mode shall each be of a strength and design which will assure performance of their intended function until the securement device is intentionally released.

G. Buckles, anchorage fittings and other components essential to the functioning of the securement device shall be integrated into the securement device in accordance with recognized practices and in a manner which preserves the overall strength of the securement device.

Rule 11 MCAR, Section 1.0191, Paragraph B, Subdivision 1 is amended to read:

1. Webbing type devices shall be assemblies that meet or exceed Type 2 pelvic restraint seat belt requirements as specified in ~~federal regulations~~ Section S4.2 (2)(b) of Federal Motor Vehicle Safety Standard No. 209, 49 Code of Federal Regulations, Part 571.209 (1977 edition) or be certified by the manufacturer that such device meets or exceeds assembly strength of 5,000 pounds in loop fashion or 2,500 pounds on each anchorage leg.
   a. Certification may be the specification listed in catalogs or publications by the manufacturer.
   b. All new construction of such securement devices and repairs to webbing shall conform with standards established by the manufacturer of the webbing.

Rule 11 MCAR, Section 1.0193, Paragraphs A and B are deleted and the following is inserted:

A. Each vehicle equipped with a wheelchair securement device shall be equipped with a Type 2 seat belt assembly with a detachable upper torso portion at each such wheelchair position in the vehicle or, in the alternative, shall be equipped with a Type 1 pelvic restraint assembly and a length of Type 1 or Type 2 seat belt webbing, with buckle, adequate to encircle the chest of the wheelchair occupant and the backrest of the wheelchair.

B. Type 1 and Type 2 seat belt assemblies shall meet the requirements of Sections S 1 through S 4.4 of Federal Motor Vehicle Safety Standard No. 209, 49 Code of Federal Regulations, Part 571.209 (1977 edition).

C. Type 1 and Type 2 seat belt assemblies and the detachable upper torso restraint, if a detachable upper torso restraint is installed in lieu of using a length of seat belt webbing to encircle the chest of the occupant and the backrest of the wheelchair, shall be installed and anchored in accordance with Sections S 1 through S 4.3.2 of Federal Motor Vehicle Safety Standard No. 210, 49 Code of Federal Regulations, Part 571.210 (1977 edition).

STATE OF MINNESOTA

BEFORE EDWARD G. NOVAK

COUNTY OF RAMSEY

COMMISSIONER OF PUBLIC SAFETY

In the matter of the Proposed Adoption
of Rules of the State Department of
Public Safety Governing Minimum Standards
for Wheelchair Securement Devices.

ORDER FOR HEARING

To effectively implement Laws 1978, Chapter 752, the Minnesota Commissioner of Public Safety deems it necessary to consider adoption of the proposed rules captioned above pursuant to the authority vested in me by Minn. Stat. 299A.01, subd. 6 (1978).

NOW, THEREFORE, IT IS ORDERED this 26th day of March, 1979, that a public hearing on the proposed rules captioned above be held in Room B-9 Transportation Building, St. Paul, Minnesota, on May 17, 1979, commencing at 9 a.m., and continuing until all representatives of associations or other interested groups or persons have had an opportunity to be heard.

IT IS FURTHER ORDERED, that a Notice of Hearing be mailed to all persons or representatives of associations or other interested groups who have registered their names with the Secretary of State for that purpose.

IT IS FURTHER ORDERED, that the Notice of Hearing be published in the State Register.

STATE OF MINNESOTA
DEPARTMENT OF PUBLIC SAFETY

Edw G Novak

COMMISSIONER OF PUBLIC SAFETY (Acting)

STATE OF MINNESOTA

BEFORE EDWARD G. NOVAK

COUNTY OF RAMSEY

COMMISSIONER OF PUBLIC SAFETY

In the matter of the Proposed Adoption of Rules of the State Department of Public Safety Governing Minimum Standards for Wheelchair Securement Devices.

NOTICE OF HEARING

Notice is hereby given that a public hearing in the above-entitled matter will be held in Room B-9 Transportation Building, John Ireland Blvd., St. Paul, Minnesota, on May 17, 1979, commencing at 9 a.m., and continuing until all persons have had an opportunity to be heard concerning adoption of the proposed rules captioned above.

All interested or affected persons or representatives of groups or organizations will have an opportunity to participate, by submitting either oral or written data, statement, or arguments. Written materials may be submitted by mail to Peter Erickson , Office of Hearing Examiners, 1745 University Avenue, St. Paul, MN, either before the hearing or within 5 days after the close of the hearing (or within 20 days if so ordered by the hearing examiner). The proposed rules are subject to change as a result of the rule hearing process. The department therefore strongly urges those who may potentially be affected by the substance of the proposed rules to participate in the hearing process.

The Commissioner proposes to adopt rules relating to strength, positioning, attachment and design of devices used to secure wheelchairs in vehicles during transport of persons in wheelchairs and standards for seat belts to be used by such persons. The proposed rules also include procedures for approval by the Commisisoner of such devices, issuance and revocation of certificates of approval, inspections, labeling requirements and responsibilities of drivers of vehicles equipped with securement devices.

The Department's authority to promulgate the proposed rules is contained in Laws 1978, Chapter 752. One free copy of the proposed rules is available and may be obtained by writing to Diane Hamilton, Room 210 Transportation Bldg., St. Paul, MN 55155. Additional copies will be available at the door on the date of the hearing.

Any person may request notification of the date on which the Hearing Examiner's Report will be available, after which date the agency may not take any final action on the rules for a period of five working days. Any person may request notification of the date on which the hearing record has been submitted (or resubmitted) to the Attorney General by the agency. If you desire to be so notified, you may so indicate at the hearing. After the hearing, you may request notification by sending a written request to the hearing examiner (in the case of the Hearing Examiner's Report), or to the agency (in the case of the agency's submission or resubmission to the Attorney General).

Notice is hereby given that 25 days prior to the hearing, a Statement of Need and Reasonableness will be available for review at the Department of Public Safety and at the Office of Hearing Examiners. The Statement of Need & Reasonableness will include a summary of all of the evidence which will be presented by the department at the hearing, justifying both the need for & reasonableness of the proposed rules. Copies of the Statement of Need & Reasonableness may be obtained from the Office of Hearing Examiners at a minimal charge.

Please be advised that Minnesota Statutes, Chapter 10A, requires each lobbyist to register with the State Ethical Practices Board within five days after he commences lobbying. Lobbying includes attempting to influence rule making by communicating or urging others to communicate with public officials. A lobbyist is generally any individual who spends more than $250 per year for lobbying or any individual who is engaged for pay or authorized to spend money by another individual or association and who spends more than $250 per year or five hours per month at lobbying. The statute provides certain exceptions. Questions should be directed to the Ethical Practices Board, 41 State Office Building, St. Paul, Minnesota 55155, phone (612) 296-5615.

STATE OF MINNESOTA
DEPARTMENT OF PUBLIC SAFETY

Edw J Novak
COMMISSIONER OF PUBLIC SAFETY (Acting)

3-27-79
DATE

STATE OF MINNESOTA

COUNTY OF RAMSEY

BEFORE EDWARD G. NOVAK

COMMISSIONER OF PUBLIC SAFETY

In the matter of the Proposed Adoption of Rules of the State Department of Public Safety Governing Standards for Wheelchair Securement Devices.

STATEMENT OF NEED AND REASONABLENESS

The above captioned rules are not amendments to existing rules of the Deparment of Public Safety, Safety Administration Division.

The need to adopt these rules arises because of the statutory mandate Minn. Stat. 299A.18(1978) that the Commissioner adopt rules pertaining to minimum standards for wheelchair securement devices used in motor vehicles. These rules are designed to promote the personal safety of persons confined to wheelchairs during periods of time when they are transported in a motor vehicle. The proposed rules prescribe minimum standards for both wheelchair securement devices and for seat belt assemblies used to secure wheelchair occupants.

The justification establishing the need for and reasonableness of the specific substantive provisions of the rules is as follows:

11 MCAR 1.0190. This section reiterates statutory requirements. It requires the securement of wheelchairs in motor vehicles in a manner which will prevent forward, backward or lateral movement of the occupied wheelchair. This requirement is necessary to prevent an occupied wheelchair from moving about the interior of a vehicle as the vehicle driver accelerates, brakes and performs other driving maneuvers. Since movement can occur in any direction, unrestrained movement of a wheelchair in a moving vehicle is dangerous to the safety of the person in the wheelchair and to the safety of other persons in the vehicle.

11 MCAR 1.0191. This section prescribes minimum standards for wheelchair securement devices, including requirements for attachment and anchoring, and specifications for metal and webbing type devices

Paragraph (A) requires attachment of the securement device to the wheelchair frame at three spaced points, to minimize movement of the wheelchair, to reduce the load acting on the wheelchair frame at individual points of attachment, and to prevent rotation of the chair about its vertical axis. While it is conceivable that attachment of securement devices to two points on a wheelchair frame could adequately restrain the wheelchair, an arrangement

of this type would necessarily impose greater loads at the two points of attachment than would normally be encountered with three spaced points of attachment.

Paragraph (B) specifies the requirements for metal and webbing type devices. Webbing type securement devices may be constructed of webbing meeting the requirements of Federal Motor Vehicle Safety Standard (FMVSS) No. 209, 49 code of Federal Regulations, Part 571.209, for Type 2 seat belts or be constructed of webbing with a tensile strength of at least 2500 pounds. Section S4.2 (2)(b) of the standard requires a minimum tensile strength of 6000 pounds for pelvic (lap) portion of the seat belt assembly. Alternatively webbing certified by the manufacturer as having a tensile strength of at least 2500 pounds may be used to construct webbing type devices. While webbing certified to be in compliance with FMVSS 209 is desirable because the certification indicates substantial resistance to abrasion, some webbing manufactured for other purposes is also suitably strong and resistant to abrasion.

No attempt is made to establish specific standards for all-metal securement devices except that they must be at least equal to the strength of webbing-type devices. In the absence of minimum standards based on research and testing, the department cannot properly adopt detailed specifications for all-metal devices and it is believed preferable to provide latitude in the rules to accommodate various designs which will accomplish the desired result.

Paragraphs (C) and (D) make requirements intended to provide safety to occupants of the vehicle containing the device. The device must be capable of retraction and removal for the purpose of storage when not in use. This is necessary to minimize the likelihood of damage to the device which could weaken it or render it unusable. Additionally, persons on foot in the vehicle could easily trip over unused devices lying on the floor of the vehicle.

Paragraph (E) requires anchoring of each securement device to the vehicle with SAE Standard J429 Grade 5 bolts or equivalent. This will assure that each securement device is anchored to the vehicle in a manner which will prevent the securement device from being torn loose at the anchor point in normal usage. Anchoring of securement devices to interior paneling is forbidden because interior paneling is primarily for appearance purposes and does not have sufficient strength to withstand the forces necessary to anchor a wheelchair. The use of metal track or rail is permitted to provide optional anchoring points in order to facilitate the securing of wheelchairs of various dimensions and designs. The use of a positive attachment metal fitting is necessary to assure that the securement device does not slide along the rail or detach from the track when negative load is momentarily imposed on the device while it is in use. Additionally, the metal fitting would resist abrasion at the point of attachment.

11 MCAR 1.0192. This section contains the procedures for obtaining approval of a wheelchair securement device, including test procedures, labeling requirements and revocation of approval. The approval procedure is intended

to reasonably reflect the adequacy of the securement device in actual use. A copy of the installation instructions is required to be submitted to the department for review as part of the approval process to assure that the purchasers of the device will receive sufficient information to make a proper installation. The installation instructions and illustrative drawings or photos will be retained in the files of the department.

Testing of the securement device will be by appointment with an agent of the Commissioner. The test will be conducted in the greater St. Paul-Minneapolis area. The location selected will be paved and free of other traffic. Sandbags or similar dead weight will be used to load the wheelchair to 140 pounds. The maximum of one inch movement in any direction during the test is necessary to demonstrate the effectiveness of the securement device. Excessive movement would permit larger shock forces to be imposed on the securement device, thereby increasing the likelihood of failure of the device. This could subject the wheelchair occupant to discomfort because the occupant is restrained by a seat belt attached to the vehicle independently from the wheelchair. Labeling or other marking of the device is necessary to permit identification of the manufacturer as may be necessary throughout the life of the device.

11 MCAR 1.0193. This section requires vehicles equipped with wheelchair securement devices to be equipped with seat belts at each wheelchair position. Seat belts complying with FMVSS 209 standard for seat belt assemblies will meet the requirements of this rule. This standard is based on extensive research and testing and compliance with the standard will assure effective passenger restraint.

The installing of a wheelchair securement device after October 1, 1979, (paragraph A) will require the simultaneous installation of a seat belt assembly at each wheelchair position. A Type 2 FMVSS 209 seat belt assembly with detachable upper torso restraint is required to provide maximum protection to the occupant of the wheelchair. However, for vehicles with securement devices installed prior to October 1, 1979, a Type 1 or a Type 2 FMVSS 209 seat belt assembly is required. The upper torso restraint is optional for these vehicles in order to accomodate existing installations which are difficult or impossible to modify.

11 MCAR 1.0194. The responsibility to properly secure the occupied wheelchair and fasten the passenger restraints about the occupant and to store the devices when not in use is assigned to the driver of the vehicle. This is necessary to assure that the devices are properly used. Performance of these tasks by an assistant accompanying the driver would be regarded as compliance with the requirement.

11 MCAR 1.0195. This section authorizes the Commissioner to order removal or corrective action of defective devices following detection of such condition. This is necessary, as an enforcement tool, to ensure that devices in use are functioning properly during the period of approval.

11 MCAR 1.0196. The effective date of October 1, 1979, is specified in order to allow time after approval of the rules for securement devices to

be approved and certified prior to their use in new installations. Securement devices installed in vehicles prior to October 1, 1979, would be permitted to remain in use through December 31, 1980, if they do not attach to wheelchair wheels, are of adequate strength and do not permit excessive movement of the occupied wheelchair.

STATE OF MINNESOTA
DEPARTMENT OF PUBLIC SAFETY

Edw R Novak
ACTING COMMISSIONER OF PUBLIC SAFETY

4-30-79
DATE

STATE OF MINNESOTA

COUNTY OF RAMSEY

In the matter of the Proposed Adoption of
Rules of the State Department of Public Safety
Governing Standards for Wheelchair Securement
Devices.

AFFIDAVIT OF RECEIPT OF SECRETARY OF STATE'S LIST

Diane Hamilton, being duly sworn on oath deposes and says:

1) That she is an employee of the Department of Public Safety of the State of Minnesota.

2) That on the 12th day of April, 1979, she went to the Secretary of State's office of the State of Minnesota and requested a current list of all representatives of associations or other interested groups or persons who had registered their names with the Secretary of State for the purpose of obtaining notices of public hearings relating to the promulgation of rules pursuant to Minn. Stat. 15.0412 (1978).

3) That on the 12th day of April, 1979, in response to the above request, the Secretary of State provided her with such a list, a copy of which is attached hereto and incorporated by reference.

Diane K. Hamilton

Subscribed and sworn to before me

this 20th day of April

19 79.

D. N. LEE
Notary Public, Hennepin County Mn.
MY COMMISSION EXPIRES
April 24 1981

STATE OF MINNESOTA

COUNTY OF RAMSEY

In the matter of the Proposed Adoption
of Rules of the State Department of
Public Safety Governing Standards for
Wheelchair Securement Devices.

CERTIFICATE

I hereby certify that the enclosed 2 sheets 587 general labels and Public Safety list constitute the complete list of persons, associations, and other interested groups who as of 4:10 o'clock P. M., this 12th day of April, 19 79, have requested pursuant to Minn. Stat. 15.0412, subd. 4 (1978), that their names be placed on file with the Secretary of State for the purpose of receiving notice of public hearing on proposed rules on the subject captioned above.

SECRETARY OF STATE

JOAN ANDERSON GROWE

Joan Anderson Growe

By Kathy Hyden

STATE OF MINNESOTA

COUNTY OF RAMSEY

In the matter of the Proposed Adoption of Rules of the State Department of Public Safety, Governing Standards for Wheelchair Securement Devices.

AFFIDAVIT OF MAILING

Diane Hamilton, being first duly sworn, deposes and says:

That on the 13th day of April, 1979, at the City of St. Paul, County of Ramsey, State of Minnesota, she served the Notice of Hearing to all persons on the Secretary of State's list by depositing in the United States mail at said City of St. Paul, a true and correct copy thereof, properly enveloped, with postage prepaid.

Diane K. Hamilton

Subscribed and sworn to before me this 20th day of April, 1979.

D. N. LEE
Notary Public, Hennepin County Mn.
MY COMMISSION EXPIRES
April 24 1981

STATE OF MINNESOTA
OFFICE OF HEARING EXAMINERS

FOR THE DEPARTMENT OF PUBLIC SAFETY

IN THE MATTER OF THE PROPOSED ADOPTION OF RULES OF THE STATE DEPARTMENT OF PUBLIC SAFETY GOVERNING MINIMUM STANDARDS FOR WHEELCHAIR SECUREMENT DEVICES.	ORDER OF THE CHIEF HEARING EXAMINER

WHEREAS, the above-captioned rules came on for hearing before Peter C. Erickson of the Office of Hearing Examiners on May 17, 1979, at 9:00 a.m. in Room B9 Transportation Building, St. Paul, Minnesota; and

WHEREAS, during the course of the hearing, it became apparent to the Hearing Examiner that the rules contained incorporation by reference of certain standards and federal law, which incorporation by reference had not been approved by the Chief Hearing Examiner pursuant to the provisions of Minn. Stat. § 15.0412, Subd. 4; and

WHEREAS, on the advice of the Hearing Examiner, the Department of Public Safety submitted a petition for incorporation by reference to the Chief Hearing Examiner, which was received on May 24, 1979, wherein they requested authority to incorporate by reference the Society of Automative Engineers Standard No. 429 (SAE 429) and certain provisions of 49 CFR, Part 571.209 (Sections S1 through S4.4) and Part 571.210 (Sections S1 through S4.3.2) (1977); and

WHEREAS, the Chief Hearing Examiner, having reviewed the above-referenced federal regulations and cited standard and has found them to be in excess of 3,000 words and has determined that they would exceed five pages of publication in the State Register; and

WHEREAS, the Department of Public Safety has indicated that the documents are available for review and copying in the office of the State Patrol Division of the Department of Public Safety, 107 Transportation Building, St. Paul, Minnesota 55155.

NOW, THEREFORE, IT IS ORDERED that the Department of Public Safety shall have the approval of the Chief Hearing Examiner to incorporate by reference in their proposed rules the above-referenced items.

Dated this 30th day
of May, 1979.

DUANE R. HARVES
Chief Hearing Examiner

STATE OF MINNESOTA

COUNTY OF RAMSEY

BEFORE JOHN P. SOPSIC

COMMISSIONER OF PUBLIC SAFETY

In the matter of the Proposed Adoption of Rules of the State Department of Public Safety Governing Minimum Standards for Wheelchair Securement Devices.

PETITION FOR INCORPORATION BY REFERENCE

The above captioned rules were heard before Peter Erickson of the Office of Hearing Examiners on May 17, 1979 at 9:00 a.m. in Room B9 Transportation Building, St. Paul, Minnesota. At the hearing amendments to the proposed rules were offered by the Department (Attachment 1). Reference is made in the proposed and amended rules to certain federal regulations and industry standards.

On the advice of the Hearing Examiner, and pursuant to Minn. Stat. 15.0412, subd 2 and Rule HE 108, the Department of Public Safety hereby petitions the Chief Hearing Examiner for approval to incorporate by reference the regulations and standards listed below.

A. Sections S1 through S4.4 of Federal Motor Vehicle Safety Standard No. 209, 49 CFR, Part 571.209 (1977). This federal regulation specifies the requirements for Type 1 and Type 2 safety belt assemblies. These sections are referred to in Rule 11 MCAR Sections 1.0191 paragraph B.1., and 1.0193 paragraph B, as amended. The full text of the referenced material is found in Attachment 2.

B. Sections S1 through S4.3.2 of Federal Motor Vehicle Safety Standard No. 210, 49 CFR, Part 571.210 (1977). This federal regulation specifies the installation and anchorage requirements of the Type 1 and Type 2 seat belt assemblies and upper torso restraints. These sections are referred to in Rule 11 MCAR Section 1.0193 paragraph C as amended. The full text of the referenced material is found in Attachment 3.

C. Society of Automative Engineers Standard No. 429 (SAE 429). This industry standard specifies the type and grade of bolt to be used in anchoring the securement device. This standard is referred to generally in the proposed Rule 11 MCAR Section 1.0191 Paragraph E and specifically in the Statement of Need and Reasonableness. (Specific reference to SAE 429 will be incorporated into this section of the adopted rules.) The full text of the referenced material is found in Attachment 4.

The above listed materials, sought to be incorporated by reference, are available for reviewing and copying in the office of the State Patrol Division of the Department of Public Safety, 107 Transportation Building, St. Paul, Minnesota 55155.

STATE OF MINNESOTA
DEPARTMENT OF PUBLIC SAFETY

COMMISSIONER OF PUBLIC SAFETY

May 24, 1979
DATE

ATTACHMENT 1.

Hearing Exhibit DPS 7

The department of public safety amends the proposed Rules governing Minimum Standards for Wheelchair Securement Devices as follows: (Amended language is ~~stricken~~, new language is underlined.)

Rule 11 MCAR, Section 1.0190, Paragraph B is amended by adding a sentence to make Paragraph B read:

B. Each wheelchair securement device shall attach to the frame of the wheelchair without damaging the frame. "Damage" includes effects harmful to the strength, integrity or serviceableness of the wheelchair, but does not include minor dents, scratches or other cosmetic blemishes not materially affecting serviceableness.

Rule 11 MCAR, Section 1.0190 is further amended by adding two paragraphs to read:

F. The method or device which provides attachment of the securement device to the wheelchair frame and the method or device locking the securement device in the load-holding mode shall each be of a strength and design which will assure performance of their intended function until the securement device is intentionally released.

G. Buckles, anchorage fittings and other components essential to the functioning of the securement device shall be integrated into the securement device in accordance with recognized practices and in a manner which preserves the overall strength of the securement device.

Rule 11 MCAR, Section 1.0191, Paragraph B, Subdivision 1 is amended to read:

1. Webbing type devices shall be assemblies that meet or exceed Type 2 pelvic restraint seat belt requirements as specified in ~~federal regulations~~ Section S4.2 (2)(b) of Federal Motor Vehicle Safety Standard No. 209, 49 Code of Federal Regulations, Part 571.209 (1977 edition) or be certified by the manufacturer that such device meets or exceeds assembly strength of 5,000 pounds in loop fashion or 2,500 pounds on each anchorage leg.

Petition paragraph a.

   a. Certification may be the specification listed in catalogs or publications by the manufacturer.

   b. All new construction of such securement devices and repairs to webbing shall conform with standards established by the manufacturer of the webbing.

Rule 11 MCAR, Section 1.0193, Paragraphs A and B are deleted and the following is inserted:

A. Each vehicle equipped with a wheelchair securement device shall be equipped with a Type 2 seat belt assembly with a detachable upper torso portion at each such wheelchair position in the vehicle or, in the alternative, shall be equipped with a Type 1 pelvic restraint assembly and a length of Type 1 or Type 2 seat belt webbing, with buckle, adequate to encircle the chest of the wheelchair occupant and the backrest of the wheelchair.

Petition paragraph a.

B. Type 1 and Type 2 seat belt assemblies shall meet the requirements of Sections S 1 through S 4.4 of Federal Motor Vehicle Safety Standard No. 209, 49 Code of Federal Regulations, Part 571.209 (1977 edition).

C. Type 1 and Type 2 seat belt assemblies and the detachable upper torso restraint, if a detachable upper torso restraint is installed in lieu of using a length of seat belt webbing to encircle the chest of the occupant and the backrest of the wheelchair, shall be installed and anchored in accordance with Sections S 1 through S 4.3.2 of Federal Motor Vehicle Safety Standard No. 210, 49 Code of Federal Regulations, Part 571.210 (1977 edition).

Petition paragraph b.

PROPOSED RULES

MINNESOTA DEPARTMENT OF PUBLIC SAFETY
SAFETY ADMINISTRATION DIVISION

Chapter 21 : Standard For Wheelchair Securement Devices

11 MCAR 1.0188 PURPOSE AND AUTHORITY

A. Purpose: The purpose of these rules is to establish minimum standards for approval of wheelchair securement devices in vehicles and approval of seat belt assemblies and anchorages used to protect persons in wheelchairs while transported in vehicles.

B. Authority: These rules are promulgated pursuant to the authority granted by Laws 1978, Chapter 752.

11 MCAR 1.0189 DEFINITIONS

For the purpose of these rules, the following terms shall have the meanings ascribed to them:

A. Anchorage. The provision for transferring wheelchair securement loads to the vehicle structure.

B. Commissioner. The Commissioner of Public Safety or his duly authorized agent.

C. Interior Paneling. Material used to finish the interior of a vehicle, not including the floor.

D. Wheelchair Securement Device or Securement Device. An apparatus installed in a motor vehicle for the purpose of securing an occupied wheelchair into a location in the vehicle.

11 MCAR 1.0190 WHEELCHAIR SECUREMENT

A. An occupied wheelchair transported in a vehicle shall be secured with a securement device of sufficient strength to prevent forward, backward, lateral or vertical movement of

the wheelchair when the device is engaged and the vehicle is in motion, accelerating or braking.

B. Each wheelchair securement device shall attach to the frame of the wheelchair without damaging the frame.

C. A wheelchair securement device shall not be attached to a wheel of a wheelchair.

11 MCAR 1.0191 MINIMUM STANDARDS

Each wheelchair securement device shall:

A. Attach to the wheelchair frame on at least three (3) points. The three (3) points of contact shall be spaced to provide effective securement.

B. Consist of at least two (2) webbing - type belts described in clause (1) or at least two (2) all-metal devices described in clause (2) or one or more of each such device.

(1) Webbing type devices shall be assemblies that meet or exceed Type 2 pelvic restraint seat belt requirements as specified in federal regulations or be certified by the manufacturer that such device meets or exceeds assembly strength of 5,000 pounds in loop fashion or 2,500 pounds on each anchorage leg.

(a) Certification may be the specification listed in catalogs or publications by the manufacturer.

(b) All new construction of such securement devices and repairs to webbing shall conform with standards established by the manufacturer of the webbing.

(2) All-metal securement devices shall be of a design and construction which provides wheelchair securement strength

at least equal to the strength of a webbing type device comprised of three separate attachments and anchorages.

C. Be free of sharp edges, corners and jagged projections to minimize injury to persons in the event of unintentional contact.

D. Be capable of retraction, and be readily removable or otherwise suitably storeable when not in use.

E. Be anchored to the vehicle at not less than two separate points with bolts, nuts and lock washers or self-locking nuts.

(1) Bolts used shall be not less than 3/8 inch in diameter and of National Fine Thread SAE grade 5 designation or equivalent.

Petition paragraph C.

(2) Where anchorage bolts do not pierce the vehicle frame, subframe, bodypost or equivalent metal structure, a metal reinforcement plate or washer not less than 1/16 inches thick by 2 1/2 inches in diameter is required.

(3) In no event shall interior paneling constitute anchorage for a point of securement.

(4) A metal track, rail or similar device permitting attachment of the securement device at optional points thereon may be used to anchor the securement device, provided:

(a) The track, rail or other device is secured to the vehicle in complaince with anchorage requirements of this rule.

(b) The attachment of the securement device to the anchor point is by means of a positive attachment metal fitting.

11 MCAR 1.0192 APPROVAL PROCEDURE

A. Application for approval of a wheelchair securement device shall be made to the commissioner and shall be accompanied

by the manufacturer's actual or proposed written installation instructions and photographs or drawings clearly depicting the construction of the device and its physical characteristics, including all mounting hardware.

B. The applicant shall furnish a vehicle with the securement device installed therein and demonstrate the device by attaching it to a wheelchair furnished by the applicant. The wheelchair shall not be modified to accomodate the securement device. The commissioner may load the wheelchair to 140 pounds and require the vehicle be accelerated, driven around corners and subjected to hard braking at speeds of thirty miles per hour or less. Movement of the wheelchair more than one (1) inch in any direction, including vertically, during such test shall be grounds for refusal of approval. Measurement of movement shall be at the points where wheechair wheels contact the floor. Damage to the wheelchair or any other property during such test shall be the responsibility of the applicant.

C. Upon determining that the securement device meets the requirements of these rules, the commissioner shall issue a certificate of approval authorizing use of the device. The approval shall expire five years from the date of issuance. A securement device installed in a vehicle during the life of the approval may be used throughout its useful life in any vehicle.

D. The commissioner may revoke any approval granted hereunder upon a showing that the securement device does not meet a requirement of these rules.

E. Each wheelchair securement device shall be permanently labeled

with the name, initials, or trademark of the manufacturer and the model designation of the device. The label shall be readily visible and legible from the outside of the device when it is properly mounted to the vehicle and in use.

11 MCAR 1.0193 SEAT BELTS

A. Each vehicle equipped with a wheel chair securement deivce installed after October 1, 1979, shall be equipped with a type 2 seat belt assembly with a detachable upper torso portion at each such wheelchair position in the vehicle. The seat belt assembly, the upper torso restraint, and the anchorages for both shall meet the requirements of applicable Federal Motor Vehicle Safety Standards.

B. Each vehicle equipped with a securement device installed prior to October 1, 1979, shall be equipped with a type 1 or type 2 seat belt assembly at each such wheelchair position in the vehicle. The seat belt assembly, and the upper torso restraint if so equipped, and their respective anchorages shall meet the requirements of applicable Federal Motor Vehicle Standards.

11 MCAR 1.0194 SECUREMENT

It shall be the responsibility of the driver of any vehicle equipped with a wheelchair securement device to:

A. Properly secure an occupied wheelchair prior to moving the vehicle unless the wheelchair occupant is capable of securing the device and does so.

B. Fasten the seat belt assembly, and upper torso

restraint if so equipped, around the occupant of the wheelchair unless the occupant is capable of fastening same and does so. The driver shall not fasten the assembly if doing so would aggravate a physical condition of the occupant.

C. Retract, remove or otherwise store securement devices and seat belt assemblies when not in use to prevent tripping of persons and damage to devices.

11 MCAR 1.0195 INSPECTION

The commissioner may order the removal or corrective action upon determining that any wheelchair securement device without regard to date of installation.

A. Is not capable of sustaining loads imposed thereon in restraining an occupied wheelchair, or

B. The securement device permits excessive movement of an occupied wheelchair.

11 MCAR 1.0196 EFFECTIVE DATES

These rules apply to all securement devices installed in a vehicle after October 1, 1979, and to any securement device used in any vehicle after December 31, 1980.

STATE OF MINNESOTA

COUNTY OF RAMSEY

BEFORE EDWARD G. NOVAK

COMMISSIONER OF PUBLIC SAFETY

In the matter of the Proposed Adoption of Rules of the State Department of Public Safety Governing Standards for Wheelchair Securement Devices.

STATEMENT OF NEED AND REASONABLENESS

The above captioned rules are not amendments to existing rules of the Deparment of Public Safety, Safety Administration Division.

The need to adopt these rules arises because of the statutory mandate Minn. Stat. 299A.18(1978) that the Commissioner adopt rules pertaining to minimum standards for wheelchair securement devices used in motor vehicles. These rules are designed to promote the personal safety of persons confined to wheelchairs during periods of time when they are transported in a motor vehicle. The proposed rules prescribe minimum standards for both wheelchair securement devices and for seat belt assemblies used to secure wheelchair occupants.

The justification establishing the need for and reasonableness of the specific substantive provisions of the rules is as follows:

11 MCAR 1.0190. This section reiterates statutory requirements. It requires the securement of wheelchairs in motor vehicles in a manner which will prevent forward, backward or lateral movement of the occupied wheelchair. This requirement is necessary to prevent an occupied wheelchair from moving about the interior of a vehicle as the vehicle driver accelerates, brakes and performs other driving maneuvers. Since movement can occur in any direction, unrestrained movement of a wheelchair in a moving vehicle is dangerous to the safety of the person in the wheelchair and to the safety of other persons in the vehicle.

11 MCAR 1.0191. This section prescribes minimum standards for wheelchair securement devices, including requirements for attachment and anchoring, and specifications for metal and webbing type devices

Paragraph (A) requires attachment of the securement device to the wheelchair frame at three spaced points, to minimize movement of the wheelchair, to reduce the load acting on the wheelchair frame at individual points of attachment, and to prevent rotation of the chair about its vertical axis. While it is conceivable that attachment of securement devices to two points on a wheelchair frame could adequately restrain the wheelchair, an arrangement

of this type would necessarily impose greater loads at the two points of attachment than would normally be encountered with three spaced points of attachment.

Paragraph (B) specifies the requirements for metal and webbing type devices. Webbing type securement devices may be constructed of webbing meeting the requirements of Federal Motor Vehicle Safety Standard (FMVSS) No. 209, 49 code of Federal Regulations, Part 571.209, for Type 2 seat belts or be constructed of webbing with a tensile strength of at least 2500 pounds. Section S4.2 (2)(b) of the standard requires a minimum tensile strength of 6000 pounds for pelvic (lap) portion of the seat belt assembly. Alternatively webbing certified by the manufacturer as having a tensile strength of at least 2500 pounds may be used to construct webbing type devices. While webbing certified to be in compliance with FMVSS 209 is desirable because the certification indicates substantial resistance to abrasion, some webbing manufactured for other purposes is also suitably strong and resistant to abrasion.

No attempt is made to establish specific standards for all-metal securement devices except that they must be at least equal to the strength of webbing-type devices. In the absence of minimum standards based on research and testing, the department cannot properly adopt detailed specifications for all-metal devices and it is believed preferable to provide latitude in the rules to accommodate various designs which will accomplish the desired result.

Paragraphs (C) and (D) make requirements intended to provide safety to occupants of the vehicle containing the device. The device must be capable of retraction and removal for the purpose of storage when not in use. This is necessary to minimize the likelihood of damage to the device which could weaken it or render it unusable. Additionally, persons on foot in the vehicle could easily trip over unused devices lying on the floor of the vehicle.

Petition paragraph C.

Paragraph (E) requires anchoring of each securement device to the vehicle with SAE Standard J429 Grade 5 bolts or equivalent. This will assure that each securement device is anchored to the vehicle in a manner which will prevent the securement device from being torn loose at the anchor point in normal usage. Anchoring of securement devices to interior paneling is forbidden because interior paneling is primarily for appearance purposes and does not have sufficient strength to withstand the forces necessary to anchor a wheelchair. The use of metal track or rail is permitted to provide optional anchoring points in order to facilitate the securing of wheelchairs of various dimensions and designs. The use of a positive attachment metal fitting is necessary to assure that the securement device does not slide along the rail or detach from the track when negative load is momentarily imposed on the device while it is in use. Additionally, the metal fitting would resist abrasion at the point of attachment.

11 MCAR 1.0192. This section contains the procedures for obtaining approval of a wheelchair securement device, including test procedures, labeling requirements and revocation of approval. The approval procedure is intended

to reasonably reflect the adequacy of the securement device in actual use. A copy of the installation instructions is required to be submitted to the department for review as part of the approval process to assure that the purchasers of the device will receive sufficient information to make a proper installation. The installation instructions and illustrative drawings or photos will be retained in the files of the department.

Testing of the securement device will be by appointment with an agent of the Commissioner. The test will be conducted in the greater St. Paul-Minneapolis area. The location selected will be paved and free of other traffic. Sandbags or similar dead weight will be used to load the wheelchair to 140 pounds. The maximum of one inch movement in any direction during the test is necessary to demonstrate the effectiveness of the securement device. Excessive movement would permit larger shock forces to be imposed on the securement device, thereby increasing the likelihood of failure of the device. This could subject the wheelchair occupant to discomfort because the occupant is restrained by a seat belt attached to the vehicle independently from the wheelchair. Labeling or other marking of the device is necessary to permit identification of the manufacturer as may be necessary throughout the life of the device.

11 MCAR 1.0193. This section requires vehicles equipped with wheelchair securement devices to be equipped with seat belts at each wheelchair position. Seat belts complying with FMVSS 209 standard for seat belt assemblies will meet the requirements of this rule. This standard is based on extensive research and testing and compliance with the standard will assure effective passenger restraint.

The installing of a wheelchair securement device after October 1, 1979, (paragraph A) will require the simultaneous installation of a seat belt assembly at each wheelchair position. A Type 2 FMVSS 209 seat belt assembly with detachable upper torso restraint is required to provide maximum protection to the occupant of the wheelchair. However, for vehicles with securement devices installed prior to October 1, 1979, a Type 1 or a Type 2 FMVSS 209 seat belt assembly is required. The upper torso restraint is optional for these vehicles in order to accomodate existing installations which are difficult or impossible to modify.

11 MCAR 1.0194. The responsibility to properly secure the occupied wheelchair and fasten the passenger restraints about the occupant and to store the devices when not in use is assigned to the driver of the vehicle. This is necessary to assure that the devices are properly used. Performance of these tasks by an assistant accompanying the driver would be regarded as compliance with the requirement.

11 MCAR 1.0195. This section authorizes the Commissioner to order removal or corrective action of defective devices following detection of such condition. This is necessary, as an enforcement tool, to ensure that devices in use are functioning properly during the period of approval.

11 MCAR 1.0196. The effective date of October 1, 1979, is specified in order to allow time after approval of the rules for securement devices to

be approved and certified prior to their use in new installations. Securement devices installed in vehicles prior to October 1, 1979, would be permitted to remain in use through December 31, 1980, if they do not attach to wheelchair wheels, are of adequate strength and do not permit excessive movement of the occupied wheelchair.

STATE OF MINNESOTA
DEPARTMENT OF PUBLIC SAFETY

Edw H Novak
ACTING COMMISSIONER OF PUBLIC SAFETY

4-20-79
DATE

ATTACHMENT 4

5 Steel Fasteners

MECHANICAL AND MATERIAL REQUIREMENTS FOR EXTERNALLY THREADED FASTENERS—SAE J429j

SAE Standard

Report of Iron and Steel Technical Committee approved January 1949 and last revised July 1977.

1. Scope—This SAE Standard covers the mechanical and material requirements for steel bolts, screws, studs, sems,[1] and U-bolts[2] used in automotive and related industries in sizes to $1\frac{1}{2}$ in, inclusive.

[1]Sems: Screw and washer assemblies.

[2]U-bolts covered by this SAE Standard are those used primarily in the suspension and related areas of vehicles. For specification purposes, this standard treats U-bolts as studs. Thus, wherever the word "studs" appears, "U-bolts" is also implied. (Designers should recognize that the "U" configuration may not sustain a load equivalent to two bolts or studs of the same size and grade; thus, actual load carrying capacity of U-bolts should be determined by saddle load tests.)

NOTE: Previous issues of this standard also covered nuts, now covered separately in SAE J995 (August, 1967).

2. Designations

2.1 Designation System—Grades are designated by numbers where increasing numbers represent increasing tensile strength, and by decimals of whole numbers where decimals represent variations at the same strength level. The grade designations are given in Table 1.

2.2 Grades—Bolts and screws are normally available only in Grades 1, 2, 5, 5.2, 7, 8, and 8.2. Studs are normally available only in Grades 1, 2, 4, 5, 8, and 8.1. Grade 5.1 is applicable to sems which are heat treated following

TABLE 1—MECHANICAL REQUIREMENTS AND IDENTIFICATION MARKING FOR BOLTS, SCREWS, STUDS, SEMS, AND U-BOLTS[i]

Grade Designation	Products	Nominal Size Dia, in	Full Size Bolts, Screws, Studs, Sems		Machine Test Specimens of Bolts, Screws, and Studs				Surface Hardness	Core Hardness		Grade Identification Marking[j]
			Proof Load (Stress), psi	Tensile Strength (Stress) Min, psi	Yield[a] Strength (Stress) Min, psi	Tensile Strength (Stress) Min, psi	Elongation[f] Min, %	Reduction of Area Min, %	Rockwell 30N Max	Rockwell Min	Rockwell Max	
1	Bolts, Screws, Studs	1/4 thru 1-1/2	33,000	60,000	36,000[b]	60,000	18	35	—	B70	B100	None
2	Bolts, Screws, Studs	1/4 thru 3/4[c]	55,000	74,000	57,000	74,000	18	35	—	B80	B100	
		Over 3/4 to 1-1/2	33,000	60,000	36,000[b]	60,000	18	35	—	B70	B100	None
4	Studs	1/4 thru 1-1/2	65,000	115,000	100,000	115,000	10	35	—	C22	C32	None
5	Bolts, Screws, Studs	1/4 thru 1	85,000	120,000	92,000	120,000	14	35	54	C25	C34	
		Over 1 to 1-1/2	74,000	105,000	81,000	105,000	14	35	50	C19	C30	
5.1[d]	Sems[h] Bolts Screws	No. 6 thru 5/8	85,000	120,000	—	—	—	—	59.5[g]	C25	C40[g]	
		No. 6 thru 1/2										
5.2	Bolts Screws	1/4 thru 1	85,000	120,000	92,000	120,000	14	35	56	C26	C36	
7[e]	Bolts Screws	1/4 thru 1-1/2	105,000	133,000	115,000	133,000	12	35	54	C28	C34	
8	Bolts, Screws, Studs	1/4 thru 1-1/2	120,000	150,000	130,000	150,000	12	35	58.6	C33	C39	
8.1	Studs	1/4 thru 1-1/2	120,000	150,000	130,000	150,000	10	35	—	C32	C38	None
8.2	Bolts Screws	1/4 thru 1	120,000	150,000	130,000	150,000	10	35	61	C35	C42	

[a]Yield strength is stress at which a permanent set of 0.2% of gage length occurs.
[b]Yield point shall apply instead of yield strength at 0.2% offset.
[c]Grade 2 requirements for sizes 1/4 through 3/4 in apply only to bolts and screws 6 in and shorter in length, and to studs of all lengths. For bolts and screws longer than 6 in, Grade 1 requirements shall apply.
[d]Grade 5 material heat treated before assembly with a hardened washer is an acceptable substitute.
[e]Grade 7 bolts and screws are roll threaded after heat treatment.
[f]See Table 6 for gage length.
[g]Hex washer head and hex flange products without assembled washers shall have a core hardness not exceeding Rockwell C38 and a surface hardness not exceeding Rockwell 30N 57.5.
[h]Sems and similar products without washers.
[i]See footnote 2 of text.
[j]Not applicable to studs or slotted and cross recess head products.

assembly of the washer on the screw, and to products without assembled washer.

3. Materials and Processes

3.1 Steel Characteristics—Bolts, screws, studs, and sems shall be made of steel conforming to the description and chemical composition requirements specified in Table 2 for the applicable grade.

3.2 Heading Practice—Methods other than upsetting and/or extrusion are permitted only by special agreement between purchaser and supplier.

Grade 1 bolts and screws may be hot or cold headed, at option of the manufacturer.

Grades 2, 5, 5.2, 7, 8, and 8.2 bolts and screws in sizes up to 3/4 in, inclusive, and in lengths up to 6 in, inclusive, shall be cold headed, except that by special agreement they may be hot headed. Larger sizes and longer lengths may be hot or cold headed, at option of the manufacturer.

Grade 5.1 bolts, screws, and sems shall be cold headed.

3.3 Threading Practice—Grades 2, 5, 5.2, 8, and 8.2 bolts and screws in sizes up to 3/4 in, inclusive, and lengths up to 6 in, inclusive, shall be roll threaded, except by special agreement. Grade 7 bolts and screws shall be roll threaded after heat treatment. Grade 5.1 bolts, screws, and sems shall be roll threaded. Threads of all sizes of Grade 1 bolts and screws, and Grades 2, 5, 5.2, 8, and 8.2 bolts and screws in sizes over 3/4 in and/or lengths longer than 6 in, may be rolled, cut, or ground, at option of the manufacturer. Threads of all grades and sizes of studs may be rolled, cut, or ground, at option of the manufacturer.

3.4 Heat Treatment Practice—Grade 1 bolts and screws and Grades 1 and 2 studs need not be heat treated. When specified by purchaser, Grade 2 cold headed bolts and screws shall be stress relieved at a minimum stress relief temperature of 875°F (468°C). Grades 4 and 8.1 studs are manufactured from pretreated material and the studs, as manufactured, need no further heat treatment. Grades 5 and 5.2 bolts, screws, and studs shall be heat treated, oil or water quenched, at option of manufacturer, and tempered at a minimum tempering temperature of 800°F (427°C). Grade 5.1 bolts, screws, and sems shall be heat treated, quenched, and tempered at a minimum tempering temperature of 650°F (343°C). For Grade 5.1 sems, quenchants whose principal constituent is water shall not be used, unless specifically approved by the user. Grades 7 and 8 bolts and screws and Grade 8 studs shall be heat treated, oil quenched, and tempered at a minimum tempering temperature of 800°F (427°C). Grade 8.2 bolts and screws shall be fully austenitized, quenched in oil or water, and tempered at a minimum temperature of 650°F (340°C).

3.5 Decarburization—Unless otherwise specified, Grades 5, 5.1, 5.2, 7, 8, and 8.2 bolts, screws, and studs shall conform to Class C unless Class B is specified as described in SAE J121 (September, 1969).

3.6 Surface Discontinuities—Grades 5, 5.1, 5.2, 7, 8, 8.1, and 8.2 bolts, screws, and studs in sizes up to 1 in inclusive, and lengths up to 6 in inclusive shall be in conformity with the requirements of SAE J1061 (September, 1973).

When the engineering requirements of the application necessitate that surface discontinuities of bolts, screws, and studs should be more closely controlled, the purchaser shall specify the applicable limits in the original inquiry and purchase order. For certain fasteners, this may be done by reference to SAE J123 (September, 1973).

4. Mechanical Requirements—Bolts, screws, studs, and sems shall be tested in accordance with the mechanical testing requirements for the applicable type, grade, size, and length of product as specified in Table 3, and shall meet the mechanical requirements specified for that product in Table 1.

In the case of U-bolts having thread length equal to 3D or longer, cut stud-like specimens from either leg of the "U" (utilizing the maximum available thread length) and test as shown for studs. Where thread length is less than 3D, test for hardness only as shown for "short studs." (Applicable mechanical tests are shown in Table 3 and requirements in Table 1.)

5. Methods of Test

5.1 Hardness—The hardness of bolts, screws, studs, and sems shall be determined at mid-radius of a transverse section through the threaded portion of the product taken at a distance of one diameter from the end of the product. The reported hardness shall be the average of four hardness readings located at 90 deg to one another. The preparation of test specimens and the performance of hardness tests shall be in conformity with the requirements of SAE J417 (January, 1946).

To meet the requirements of paragraph 4, the hardness shall not exceed the maximum hardness specified in Table 1 for the applicable grade. In addition, as required in paragraph 4 and Table 3, the hardness shall be not less than the minimum hardness specified in Table 1 for the applicable grade.

5.2 Surface Hardness—Tests to determine surface hardness conditions shall be conducted on the ends, hexagon flats, or unthreaded shanks which have been prepared by lightly grinding or polishing to insure accurate reproducible readings in accordance with SAE J417 (January, 1946). Proper correction factors shall be used when hardness tests are made on curved surfaces, per ASTM E 18.

Depending on the location and individual surface upon which the test is conducted, some increase in hardness above that specified in Table 1, when measured on the Rockwell 30N scale, may occur for reasons other than carburization. To insure that lots of products not considered acceptable for this cause are in fact carburized, the metallographic and hardness checking technique described in SAE J121 (September, 1969) shall be used.

In applying the J121 (September, 1969) procedure, a difference between Knoop and Rockwell 30N readings by conversion may occur. This difference is disregarded since the primary purpose of the Knoop traverse in J121 (September, 1969) is to establish the existence of carburization.

5.3 Proof Load—The proof load test consists of stressing the bolt, screw, stud, or sem with a specified load which the product must withstand without permanent set.

The overall length of the specimen shall be measured between conical or ball centers on the centerline of the specimen, using mating centers on the measuring anvils. The specimen shall be marked so that it can be placed in the measuring fixture in the same position for all measurements. The measurement instrument shall be capable of measurement to 0.0001 in. In the case of sems, the washer may be removed from the screw prior to assembly in the testing machine; however, for referee testing, the washer shall be removed. For bolts, screws, and sems, 3D or longer, the specimen shall be assembled in the fixture of the tensile machine so that six complete threads are exposed between the grips. This is obtained by freely running the nut or fixture to the thread runout of the specimen and then unscrewing the specimen six full turns. Short bolts, 2 1/4–3D in length, threaded to within 2 1/2 pitches of the bearing surface shall be assembled finger tight in the fixture and unscrewed two full turns. When proof load testing studs, one end of the stud shall be assembled in a threaded fixture to the thread runout. For studs having unlike threads, this shall be the end with the finer pitch thread. The other end of the stud shall likewise be assembled in a threaded fixture, as above for bolts. The bolt, screw, stud, or sem shall then be axially loaded to the proof load specified for the applicable size, thread series, and grade in Table 5, the load retained for a period of 10 s, the load removed, and the overall length again measured.

TABLE 2—CHEMICAL COMPOSITION REQUIREMENTS[a]

Grade	Material and Treatment	Element, %					
		C		Mn	P	S	B
		Min	Max	Min	Max	Max	Min
1	Low or medium carbon steel	—	0.55	—	0.048	0.058	—
2	Low or medium carbon steel	—	0.55	—	0.048	0.058[b]	—
4	Medium carbon cold drawn steel	—	0.55	—	0.048	0.058	—
5	Medium carbon steel, quenched and tempered	0.28	0.55	—	0.048	0.058[c]	—
5.1	Low or medium carbon steel, quenched and tempered[e]	0.15	0.30	—	0.048	0.058	—
5.2	Low carbon martensite steel, fully killed, fine grain, quenched and tempered	0.15	0.25	0.74	0.048	0.058	0.0005
7	Medium carbon alloy steel, quenched and tempered[d]	0.28	0.55	—	0.040	0.045	—
8	Medium carbon alloy steel, quenched and tempered[d]	0.28	0.55	—	0.040	0.045	—
8.1	Elevated temperature drawn steel—medium carbon alloy or SAE 1541 (formerly SAE 1041)	0.28	0.55	—	0.048	0.058	—
8.2	Low carbon martensite steel, fully killed, fine grain, quenched and tempered[f]	0.15	0.25	0.74	0.048	0.058	0.0005

[a] All values are for product analysis (percent by weight). For cast or heat analysis, use standard permissible variations as shown in SAE J409 (January, 1942).

[b] For studs only, sulfur content may be 0.33% max.

[c] For studs only, sulfur content may be 0.13% max.

[d] Steel shall be fine grain, with hardenability that will produce a minimum hardness of Rockwell C47 at the center of a transverse section one diameter from the threaded end of the bolt, screw, or stud after oil quenching (see SAE J407 (August, 1947)). Carbon steel may be used by agreement between producer and consumer, for sizes 1/4–3/4 in diameter products. SAE 1541 (1041) steel, oil quenched and tempered, may be used at the option of the producer for products 7/16 in nominal diameter and smaller.

[e] For sems only, sizes 7/16–5/8 in diameter, low carbon martensite steel (as specified for Grade 5.2) may be used.

[f] Steel with hardenability that will produce a minimum hardness of Rockwell C38 at the center of a transverse section one diameter from the threaded end of the bolt or screw after quenching.

TABLE 3—MECHANICAL TESTING REQUIREMENTS FOR BOLTS, SCREWS, STUDS, AND SEMS

Product	Grade	Specified Min Tensile Strength of Product, lb	Length of Product	Hardness[a]		Tests Conducted Using Full Size Products[a]			Tests Conducted Using Machine Test Specimens[a]			
				Max	Min	Proof Load	Wedge Tensile Strength	Axial Tensile Strength	Yield Strength	Axial Tensile Strength	Elongation	Reduction of Area
Short Bolts and Screws	1, 2, 5, 5.2, 7, 8, 8.2	All	Less than 2-1/4D[b]	*	*	—	—	—	—	—	—	—
Special Head Bolts and Screws	1, 2, 5, 5.2, 7, 8, 8.2	All	All	*	*	—	—	—	—	—	—	—
Square and Hex Bolts and Screws	1, 2, 5, 5.2, 7, 8, 8.2	100,000 and less	2-1/4D to 8D or 8 in, whichever is greater	*	—	*	*	—	—	—	—	—
			Over 8D or 8 in, whichever is greater, thru and including 12 in	*	—	Option A	*	—	Option B	Option B	Option B	Option B
			Over 12 in	*	—	Option A	Option A	—	Option B	Option B	Option B	Option B
		Over 100,000	2-1/4D and longer	*	—	Option A	Option A	—	Option B	Option B	Option B	Option B
All Other Bolts and Screws	1, 2, 5, 5.2, 7, 8, 8.2	100,000 and less	2-1/4 to 8D or 8 in, whichever is greater	*	—	*	—	*	—	—	—	—
			Over 8D or 8 in, whichever is greater	*	—	Option A	—	Option A	Option B	Option B	Option B	Option B
		Over 100,000	2-1/4D and longer	*	—	Option A	—	Option A	Option B	Option B	Option B	Option B
Short Studs	1, 2, 4, 5, 8, 8.1	All	Less than 3D	*	*	—	—	—	—	—	—	—
All Other Studs	1, 2, 4, 5, 8, 8.1	100,000 and less	3D to 8D or 8 in, whichever is greater	*	—	*	*	—	—	—	—	—
			Over 8D or 8 in, whichever is greater	*	—	Option A	Option A	—	Option B	Option B	Option B	Option B
		Over 100,000	3D and longer	*	—	Option A	Option A	—	Option B	Option B	Option B	Option B
Short Bolts, Screws, and Sems	5.1	All	Less than 2-1/4D	*	*	—	—	—	—	—	—	—
Hex Head Bolts, Screws, and Sems	5.1	All	2-1/4D and longer	*	—	*	*	—	—	—	—	—
Other Bolts, Screws, and Sems	5.1	All	2-1/4D and longer	*	—	*	—	*	—	—	—	—
Tests to be performed in accordance with paragraph				5.1		5.3	5.5	5.4	5.6			

[a] Asterisks (*) denote mandatory tests. Where options are indicated, all Option A tests (which apply to full size products) or all Option B tests (which apply to machined specimens) shall be performed. Option A tests shall be performed in case arbitration is necessary. Dashes (—) denote tests which are not required.

[b] D equals nominal diameter of the product.

[c] Special head bolts and screws are those with special configurations or with drilled heads which are weaker than the threaded section.

[d] For purposes of Table 3 requirements, "length of product" is the nominal length including point chamfer as defined in SAE J105 (June, 1911), and all special point products shall be measured from the bearing surface to the crest of the last complete thread form.

The speed of testing, as determined with a free running cross head, shall not exceed 0.12 in/min.

To meet the requirements of paragraph 4, the length of the bolt, screw, stud, or sem after loading shall be the same as before loading within a tolerance of ±0.0005 in allowed for measurement error.

Variables, such as straightness and thread alignment (plus measurement error), may result in apparent elongation of the fasteners when the proof load is initially applied. In such cases, the fastener may be retested using a 3% greater load, and may be considered satisfactory if the length after this loading is the same as before this loading (within the 0.0005 in tolerance for measurement error).

5.4 **Axial Tensile Strength**—Following proof load testing, the same bolt, screw, stud, or sem shall be reassembled in the testing machine per paragraph 5.3 and axial loading applied until failure. Typical fixturing is illustrated in Fig. 1. The speed of testing, as determined with a free running cross head, shall not exceed 1 in/min.

To meet the requirements of paragraph 4, the bolt, screw, stud, or sems shall not fracture before having withstood the minimum tensile load specified for the applicable size, thread series, and grade in Table 5. In addition, for bolts, screws, and sems with regular style heads, the ultimate failure location shall occur in the body or threaded section and not at the junction of the head and shank. (See footnote c under Table 3.)

5.5 **Wedge Tensile Strength**

5.5.1 BOLTS AND SCREWS—Following proof load testing, the same bolt or screw shall be assembled with a wedge inserted under the head, as illustrated in Fig. 2, installed in the testing machine and tensile tested to failure, as described in paragraph 5.3. The angle of the wedge for the bolt or screw size and grade is specified in Table 4. The wedge shall be so placed that no corner of the square or hexagon bolt or screw head takes the bearing load; that is, a flat of the head shall be aligned with the direction of uniform thickness of the wedge. The wedge shall have a thickness of one-half the bolt or screw diameter measured at the thin side of the hole. The hole in the wedge shall have the following clearance over the nominal size of the bolt or screw, and its top

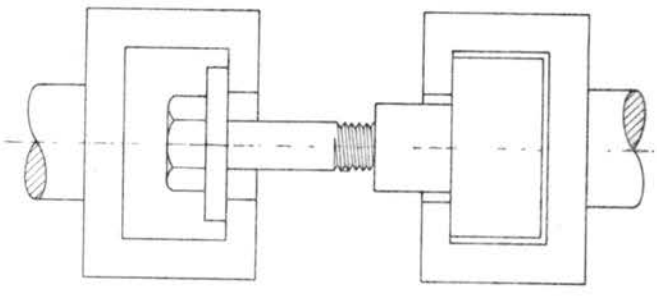

FIG. 1—TENSILE TESTING OF FULL SIZE BOLT OR SCREW

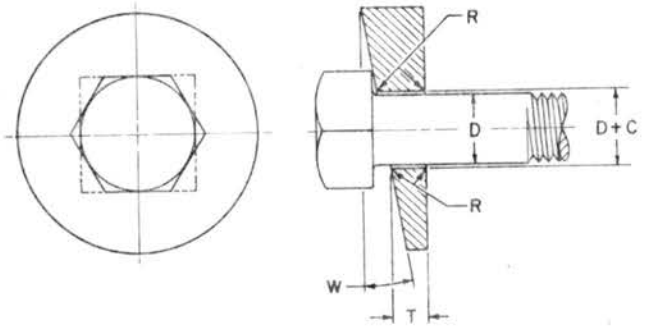

C = CLEARANCE OF HOLE (SEE PARA. 5.4.1.)
D = DIAMETER OF BOLT OR SCREW
R = RADIUS OR CHAMFER (SEE PARA. 5.4.1.)
T = THICKNESS OF WEDGE AT THIN SIDE OF HOLE EQUALS ONE HALF DIAMETER OF BOLT OR SCREW
W = WEDGE ANGLE (SEE TABLE 4)

FIG. 2—WEDGE TEST DETAILS—BOLTS AND SCREWS

and bottom edges shall be rounded or chamfered 45 deg to the following dimensions:

Nominal Bolt or Screw Size, in	Clearance in Hole, in	Radius or Depth of Chamfer, in
No. 6 thru 12	0.020	0.020
1/4 thru 1/2	0.030	0.030
9/16 thru 3/4	0.050	0.060
7/8 and 1	0.060	0.060
1-1/8 and 1-1/4	0.060	0.125
1-3/8 and 1-1/2	0.094	0.125

To meet the requirements of paragraph 4, the bolt, screw, stud, or sems shall not fracture before having withstood the minimum tensile load specified for the applicable size, thread series, and grade in Table 5. In addition, the ultimate failure location shall occur in the body or threaded section and not at the junction of the head and shank. (See footnote c under Table 3.)

ϕ 5.5.2 STUDS—Following proof load testing, the stud shall be assembled per paragraph 5.3 except with a threaded wedge, as illustrated in Fig. 3. The angle of the wedge for the stud size and grade shall be as specified in Table 4. The stud shall be assembled in the testing machine and tensile tested to failure, as described in paragraph 5.3.

The length of the threaded section of the wedge shall be equal to the diameter of the stud. To facilitate removal of the broken stud, the wedge shall be counterbored. The thickness of the wedge at the thin side of the hole shall equal the diameter of the stud plus the depth of counterbore. The supporting fixture, as shown in Fig. 3, shall have a hole clearance over the nominal size of

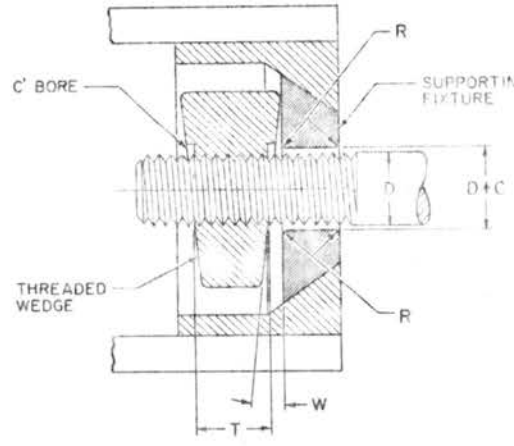

C = CLEARANCE OF HOLE (SEE PARA. 5.4.1.)
D = DIAMETER OF STUD
R = RADIUS OR CHAMFER (SEE PARA. 5.4.1.)
T = D PLUS DEPTH OF COUNTERBORE
W = WEDGE ANGLE (SEE TABLE 4)

FIG. 3—WEDGE TEST DETAILS—STUDS

TABLE 4—TENSILE TEST WEDGE ANGLES

Product	Grade	Nominal Size of Product, in	Wedge Angle, deg
Bolts and Screws	1, 2	1/4 thru 1	10
		Over 1 to 1-1/2	6
	5, 5.2, 7, 8, 8.2[a]	1/4 thru 1	10
	5, 7, 8[a]	Over 1 to 1-1/2	6
Hex Head Bolts Screws and Sems	5.1	No. 6 thru 5/8	6
Studs	1, 2, 5, 8, 8.1	1/4 thru 3/4	6
		Over 3/4 to 1-1/2	4

[a] For Grades 5, 5.2, 7, 8, and 8.2 bolts and screws which are threaded 1 dia and closer to the underside of head, wedge angle shall be 6 deg for sizes 1/4 through 3/4 in, and 4 deg for sizes over 3/4 in.

the stud, and shall have its top and bottom edges rounded or chamfered to the same limits specified for the hardened wedge in paragraph 5.5.1.

To meet the requirements of paragraph 4, the stud shall not fracture before having withstood the minimum tensile load specified for the applicable size, thread series, and grade in Table 5.

5.6 **Testing of Machined Test Specimens**—Where bolts, screws, and studs cannot be tested in full size for proof load and tensile strength requirements, tests shall be conducted using test specimens machined from the bolt, screw, or stud.

For $1\frac{1}{2}$ in diameter bolts, screws, and studs, a standard 0.500 in round 2 in gage length test specimen shall be turned from the bolt, screw, or stud with the axis of the specimen located midway between the center and outside surface of the bolt, screw, or stud shank, as shown in Fig. 4. Bolts, screws, and studs $\frac{3}{4}$ through $1\frac{3}{8}$ in diameter shall have their shanks machined to the dimensions of a standard 0.500 in round 2 in gage length test specimen concentric with the axis of the bolt, screw, or stud, leaving the bolt or screw head and threaded sections intact, as shown in Fig. 5. Bolts, screws, and studs $\frac{1}{4}$ through $\frac{5}{8}$ in diameter shall have their shanks machined to subsize specimens having dimensions shown in Fig. 5 and Table 6.

The test specimen shall be tensile tested as described in paragraph 5.3; and the yield strength, tensile strength, elongation, and reduction of area determined.

To meet the requirements of paragraph 4, the test specimen must have a yield strength, tensile strength, elongation, and reduction of area equal to or greater than the values for these properties specified for the applicable product size and grade in Table 1.

ϕ 5.7 **Common Test Fixture Details**—The grips of the tensile testing machine shall be self-aligning to avoid side thrust on the specimen.

The wedge shall have a minimum hardness of Rockwell C45.

The hole in the fixture or washer used under the head of bolts and screws during proof load and tensile testing shall have the same clearance as that specified for wedges (paragraph 5.5.1).

Wedges, nuts, and fixtures into which bolts, screws, and studs are threaded for proof load, tensile strength, and wedge tensile testing shall have threads which are of the same size, pitch, and tolerance class as the product being tested. For [illegible] (Class 2B tolerances are normally applicable.) For studs having [illegible] threads, wedges shall be threaded to provide a [illegible]

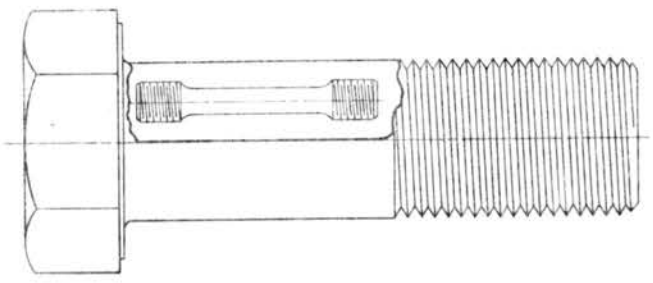

FIG. 4—LOCATION OF STANDARD ROUND 2 IN GAGE LENGTH TENSILE TEST SPECIMEN WHEN TURNED FROM LARGE SIZE BOLTS OR SCREWS

TABLE 5—PROOF LOAD AND TENSILE STRENGTH REQUIREMENTS[a]

Nominal Dia of Product and Threads per in	Stress Area, in²	Grade 1		Grade 2		Grade 4		Grades 5 and 5.2[b]		Grade 5.1		Grade 7		Grades 8, 8.1, 8.2[b]	
		Proof Load, lb	Tensile Strength Min, lb	Proof Load, lb	Tensile Strength Min, lb	Proof Load, lb	Tensile Strength Min, lb	Proof Load, lb	Tensile Strength Min, lb	Proof Load, lb	Tensile Strength Min, lb	Proof Load, lb	Tensile Strength Min, lb	Proof Load, lb	Tensile Strength Min, lb
Coarse Thread Series—UNC															
No. 6–32	0.00909	—	—	—	—	—	—	—	—	750	1,100	—	—	—	—
8–32	0.0140	—	—	—	—	—	—	—	—	1,200	1,700	—	—	—	—
10–24	0.0175	—	—	—	—	—	—	—	—	1,500	2,100	—	—	—	—
12–24	0.0242	—	—	—	—	—	—	—	—	2,050	2,900	—	—	—	—
1/4 –20	0.0318	1,050	1,900	1,750	2,350	2,050	3,650	2,700	3,800	2,700	3,800	3,350	4,250	3,800	4,750
5/16–18	0.0524	1,750	3,150	2,900	3,900	3,400	6,000	4,450	6,300	4,450	6,300	5,500	6,950	6,300	7,850
3/8 –16	0.0775	2,550	4,650	4,250	5,750	5,050	8,400	6,600	9,300	6,600	9,300	8,150	10,300	9,300	11,600
7/16–14	0.1063	3,500	6,400	5,850	7,850	6,900	12,200	9,050	12,800	9,050	12,800	11,200	14,100	12,800	15,900
1/2 –13	0.1419	4,700	8,500	7,800	10,500	9,200	16,300	12,100	17,000	12,100	17,000	14,900	18,900	17,000	21,300
9/16–12	0.182	6,000	10,900	10,000	13,500	11,800	20,900	15,500	21,800	15,500	21,800	19,100	24,200	21,800	27,300
5/8 –11	0.226	7,450	13,600	12,400	16,700	14,700	25,400	19,200	27,100	19,200	27,100	23,700	30,100	27,100	33,900
3/4 –10	0.334	11,000	20,000	18,400	24,700	21,700	38,400	28,400	40,100	—	—	35,100	44,400	40,100	50,100
7/8 – 9	0.462	15,200	27,700	15,200	27,700	30,000	53,100	39,300	55,400	—	—	48,500	61,400	55,400	69,300
1 – 8	0.606	20,000	36,400	20,000	36,400	39,400	69,700	51,500	72,700	—	—	63,600	80,600	72,700	90,900
1-1/8 – 7	0.763	25,200	45,800	25,200	45,800	49,600	87,700	56,500	80,100	—	—	80,100	101,500	91,600	114,400
1-1/4 – 7	0.969	32,000	58,100	32,000	58,100	63,000	111,400	71,700	101,700	—	—	101,700	127,700	116,300	145,400
1-3/8 – 6	1.155	38,100	69,300	38,100	69,300	75,100	132,800	85,500	121,300	—	—	121,300	153,600	138,600	173,200
1-1/2 – 6	1.405	46,400	84,300	46,400	84,300	91,300	161,600	104,000	147,500	—	—	147,500	186,900	168,600	210,800
Fine Thread Series—UNF															
No. 6–40	0.01015	—	—	—	—	—	—	—	—	850	1,200	—	—	—	—
8–36	0.01474	—	—	—	—	—	—	—	—	1,250	1,750	—	—	—	—
10–32	0.0200	—	—	—	—	—	—	—	—	1,700	2,400	—	—	—	—
12–28	0.0258	—	—	—	—	—	—	—	—	2,200	3,100	—	—	—	—
1/4 –28	0.0364	1,200	2,200	2,000	2,700	2,350	4,200	3,100	4,350	3,100	4,350	3,800	4,850	4,350	5,450
5/16–24	0.0580	1,900	3,500	3,200	4,300	3,750	6,700	4,900	6,950	4,900	6,950	6,100	7,700	6,950	8,700
3/8 –24	0.0878	2,900	5,250	4,800	6,500	5,700	10,100	7,450	10,500	7,450	10,500	9,200	11,700	10,500	13,200
7/16–20	0.1187	3,900	7,100	6,550	8,800	7,700	13,650	10,100	14,200	10,100	14,200	12,500	15,800	14,200	17,800
1/2 –20	0.1599	5,300	9,600	8,800	11,800	10,400	18,400	13,600	19,200	13,600	19,200	16,800	21,300	19,200	24,000
9/16–18	0.203	6,700	12,200	11,200	15,000	13,200	23,300	17,300	24,400	17,300	24,400	21,300	27,000	24,400	30,400
5/8 –18	0.256	8,450	15,400	14,100	18,900	16,600	29,400	21,800	30,700	21,800	30,700	26,900	34,000	30,700	38,400
3/4 –16	0.373	12,300	22,400	20,500	27,600	24,200	42,900	31,700	44,800	—	—	39,200	49,600	44,800	56,000
7/8 –14	0.509	16,800	30,500	16,800	30,500	33,100	58,500	43,300	61,100	—	—	53,400	67,700	61,100	76,400
1 –12	0.663	21,900	39,800	21,900	39,800	43,100	76,200	56,400	79,600	—	—	69,600	88,200	79,600	99,400
1 –14 uns	0.679	22,400	40,700	22,400	40,700	44,100	78,100	57,700	81,500	—	—	71,300	90,300	81,500	101,900
1-1/8 –12	0.856	28,200	51,400	28,200	51,400	55,600	98,400	63,300	89,900	—	—	89,900	113,800	102,700	128,400
1-1/4 –12	1.073	35,400	64,400	35,400	64,400	69,700	123,400	79,400	112,700	—	—	112,700	142,700	128,800	161,000
1-3/8 –12	1.315	43,400	78,900	43,400	78,900	85,500	151,200	97,300	138,100	—	—	138,100	174,900	157,800	197,200
1-1/2 –12	1.581	52,200	94,900	52,200	94,900	102,800	181,800	17,000	166,000	—	—	166,000	210,300	189,700	237,200

[a] Proof loads and tensile strengths are computed by multiplying the proof load stresses and tensile strength stresses given in Table 1 by the stress area of the thread.

The stress area of sizes and thread series not included in Table 5 may be computed from the formula: $A_s = 0.7854 \left[D - \frac{0.9743}{n} \right]^2$ where D equals nominal diameter in inch, and n equals threads per inch.

[b] Grades 5.2 and 8.2 applicable to sizes 1/4 through 1 in.

6. Marking—Unslotted bolts, screws, and hex head cems shall be marked with the grade identification symbol shown in Table 1. In addition, bolts and screws shall be marked with the manufacturer's identification symbol. Markings shall be located on the top of the head, and may be either raised or depressed, at option of the manufacturer.

Studs need not be marked.

7. Testing Requirements

7.1 **Manufacturer's Responsibility**—During the manufacture of products to the requirements of this specification, the manufacturer shall make periodic tests to ensure that the properties of the product are being maintained within specified limits. Such tests shall be conducted in accordance with a sampling plan, preferably the sampling plan given in paragraph 7.3, and the test results shall be recorded in a test report. When requested in writing by the purchaser, the manufacturer shall furnish a copy of the test report certified to be a report of the results of the last completed set of tests for the specific type, size, length, and grade of product.

Additional tests of products in individual shipments are not normally contemplated. Unless otherwise agreed at time of original inquiry and purchase order, individual heats of steel need not be identified in the finished product.

7.2 **Purchaser's Options**—If the purchaser requires that additional tests be performed by the manufacturer to determine that the properties of prod-

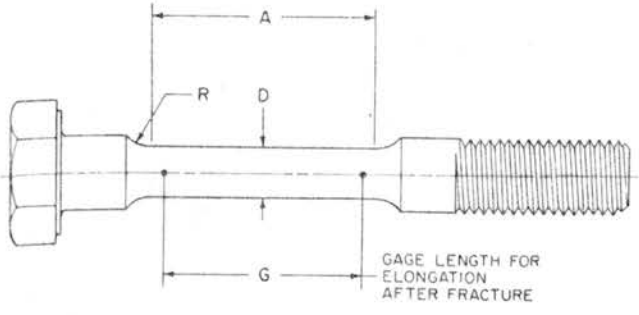

FIG. 5—TENSILE TEST SPECIMEN FOR BOLTS OR SCREWS WITH TURNED DOWN SHANK

TABLE 6—DIMENSIONS OF MACHINED TEST SPECIMENS (SEE FIG. 5 AND PARAGRAPH 5.5)

Nominal Dia of Product	Gage Length G	Dia Parallel Section, D	Length Parallel Section, Min, A	Fillet Radius, Min, R
3/4 thru 1-1/2	2.000 ± 0.005	0.500 ± 0.010	2.25	0.38[a]
1/4 thru 5/8	1.400 ± 0.005	0.350 ± 0.007	1.75	0.25
	1.000 ± 0.005	0.250 ± 0.005	1.25	0.19

[a] Minimum radius recommended 0.38 in; 0.12 minimum permitted.

ucts in an individual shipment are within specified limits, or if the purchaser requires that a sampling plan different from that given in paragraph 7.3 shall be used when determining the acceptability of a lot, or shipment, of products, the purchaser shall specify the complete testing requirements, including sampling plan and basis of acceptance, in the original inquiry and purchase order.

7.3 General—An acceptable sampling plan is outlined below:

Number of Pieces in Lot	Minimum Number of Specimens To Be Tested
50 and under	2
51 to 500	3
501 to 35,000	5
35,001 and over	8

A lot, for purposes of selecting test specimens, shall consist of all products offered for inspection and testing at one time that are of the same type, grade, size, length, and thread series and are manufactured essentially at one time and under the same process conditions.

The same test specimen may be used for different tests wherever practical.

When tested in accordance with this sampling plan, a lot shall be subject to rejection if any of the test specimens fail to meet the applicable test requirements. If the failure of a test specimen is due to improper preparation of the specimen or to incorrect testing technique, the specimen shall be discarded and another specimen substituted.

APPENDIX

(Relative to 150,000 psi tensile bolts and screws produced from low carbon martensite steels and designated as Grade 8.2)

Coverage for 150,000 psi tensile bolts and screws produced from low carbon martensite steels is included in SAE J429 (January, 1949) because several large steel and bolt producers and users have reported highly favorable results with such products over a period of more than three years. This coverage is designated by a separate grade number (Grade 8.2) to distinguish such fasteners from Grade 8 made of medium carbon and medium carbon alloy steels.

Limited data available concerning room temperature ductility and low temperature impact characteristics indicate that fasteners made to Grade 8.2 requirements may have advantages compared to alloy steels historically used for Grade 8 fasteners.

Heat treatment control for elements such as decarburization or carburization and quench cracking in heat treating are more critical for Grade 8.2 than for Grade 8 steels. Thus, more attention should be given to verification of the use of proved practices. (It is suggested that users initially require details of heat treatment practices from the fastener producer until a broad spectrum of suppliers are familiar with the closer controls necessary.)

Users should recognize the difference in stress relaxation characteristics of various steels between the temperature range of 650°F, minimum, specified for Grade 8.2 and 800°F, minimum, specified for Grade 8, when considering bolts and screws that may be exposed to such temperature range. The data available on elevated temperature properties of Grade 8.2 indicates that performance testing is desirable in applications where the operating temperature exceeds 500°F (as may also be the case with Grade 8 fasteners).

The requirements stated, herein, limit the use of steels to those which have been used on a production basis with highly favorable results. There is much evidence that other steels are satisfactory also, but these are excluded from the standard until more widespread experience is had with them.

MECHANICAL AND MATERIAL REQUIREMENTS FOR METRIC EXTERNALLY THREADED STEEL FASTENERS—SAE J1199

SAE Standard

Report of Iron and Steel Technical Committee approved February 1978.

1. Scope

1.1 This standard covers the mechanical and material requirements for eight property classes of steel, externally threaded metric fasteners in sizes M1.6 thru M36, inclusive, and suitable for use in automotive and related applications.

1.2 Products included are bolts, screws, studs, U-bolts, pre-assembled screw and washer assemblies (sems), and products manufactured the same as sems except without washer.

1.3 Products not covered are tapping screws, thread rolling screws, and self-drilling screws. Mechanical and material requirements for these products are covered in other SAE documents.

1.4 The term *stud* as referred to herein applies to a cylindrical rod of moderate length, threaded on either one or both ends or throughout its entire length. It does not apply to headed, collared, or similar products which are more closely characterized by requirements shown herein for bolts.

1.5 For specification purposes, this standard treats U-bolts as studs. Thus, wherever the word *studs* appears, *U-bolts* is also implied, U-bolts covered by this standard are those used primarily in the suspension and related areas of vehicles. (Designers should recognize that the *U* configuration may not sustain a load equivalent to two bolts or studs of the same size and grade; thus actual load carrying capacity of U-bolts should be determined by saddle load tests.)

2. Designations

2.1 Property classes are designated by numbers where increasing numbers generally represent increasing tensile strengths. The designation symbol consists of two parts:

(a) The first numeral of a two-digit symbol or the first two numerals of a three-digit symbol approximates $^1/_{100}$ of the minimum tensile strength in MPa.

(b) The last numeral approximates $^1/_{10}$ of the ratio expressed as a percentage between minimum yield stress and minimum tensile stress.

2.2 For specification purposes (on engineering drawings, purchase orders, etc.) all property class designations are used in combination with a single basic specification number as follows:

SAE J1199 (4.6)	SAE J1199 (9.8)
SAE J1199 (4.8)	SAE J1199 (10.9)
SAE J1199 (5.8)	SAE J1199 (12.8)
SAE J1199 (8.8)	SAE J1199 (12.9)

2.3 Property Classes

2.3.1 Machine screws are normally available only in classes 4.8 and 9.8; other bolts, screws, and studs are available in all classes within the specified product size limitations given in Table 1.

2.3.2 Screw and washer assemblies (sems) are covered by classes 4.8 and 9.8, and allowable deviations from normal 9.8 requirements are stated in footnotes throughout the standard.

2.3.3 At the option of the manufacturer, class 5.8 may be supplied when either class 4.6 or 4.8 is ordered, and class 4.8 may be supplied when class 4.6 is ordered.

2.4 Conversion Guidance

2.4.1 For guidance purposes only, to assist designers in selecting a property class:

(a) Class 4.6 is approximately equivalent to SAE J429, Grade 1 and ASTM A307, Grade A.

(b) Class 5.8 is approximately equivalent to SAE J429, Grade 2.

(c) Class 8.8 is approximately equivalent to SAE J429, Grade 5, and ASTM A449.

(d) Class 9.8 has properties approximately 9% stronger than SAE J429, Grade 5, and ASTM A449.

(e) Class 10.9 is approximately equivalent to SAE J429, Grade 8, and ASTM A354, Grade BD.

RECYCLED PAPER
DATE NEEDED
ROUGH DRAFT
SINGLE SPACE
DOUBLE SPACE
RUSH
FINAL COPY
CARBONS
TYPING:
ATTACHMENT 3

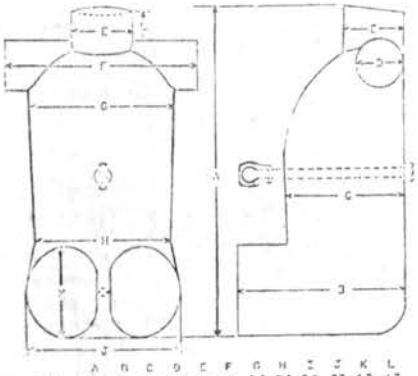

	A	B	C	D	E	F	G	H	I	J	K	L
INCH	15	6	5.3	5.3	2.9	3	6.3	6.4	6.6	7.3	4.2	1.5
CENTIMETER	38	15	13.5	13	7.5	8	16	16	17	18.5	10.7	3.8

FIGURE 6

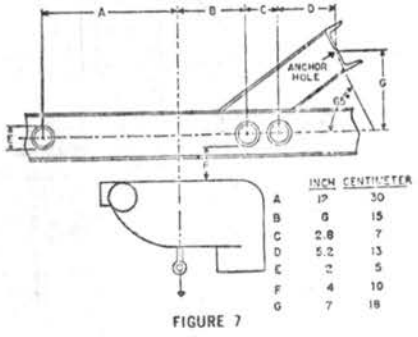

	INCH	CENTIMETER
A	12	30
B	6	15
C	2.8	7
D	5.2	13
E	2	5
F	4	10
G	7	18

FIGURE 7

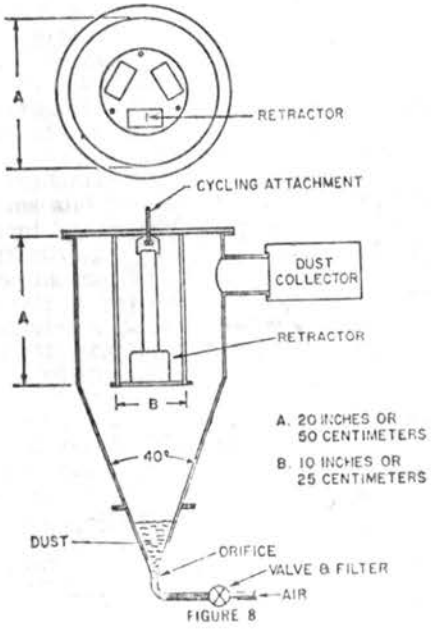

FIGURE 8

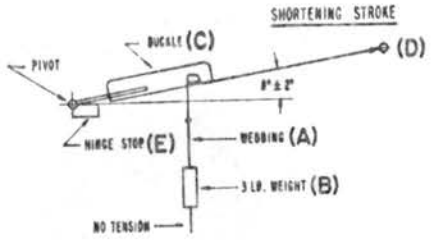

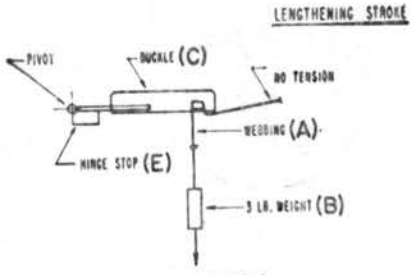

FIGURE 9

[36 FR 22902, Dec. 2, 1971, as amended at 38 FR 22959, Aug. 28, 1973; 39 2771, Jan. 24, 1974]

§ 571.210 Standard No. 210; Seat belt assembly anchorages.

S1. *Purpose and scope.* This standard establishes requirements for seat belt assembly anchorages to insure their proper location for effective occupant restraint and to reduce the likelihood of their failure.

S2. *Application.* This standard applies to passenger cars, multipurpose passenger vehicles, trucks, and buses.

S3. *Definition.* "Seat belt anchorage" means the provision for transferring seat belt assembly loads to the vehicle structure.

S4. *Requirements.*

S4.1 *Type.*

S4.1.1 Seat belt anchorages for a Type 2 seat belt assembly shall be installed for each forward-facing outboard designated seating position in passenger cars other than convertibles, and for each designated seating position for which a Type 2 seat belt

assembly is required by § 571.208 in vehicles other than passenger cars.

S4.1.2 Seat belt anchorages for a Type 1 or a Type 2 seat belt assembly shall be installed for each designated seating position, except a passenger seat in a bus or a designated seating position for which seat belt anchorages for a Type 2 seat belt assembly are required by S4.1.1.

S4.2 *Strength.*

S4.2.1 Except for side-facing seats, the anchorage for a Type 1 seat belt assembly or the pelvic portion of a Type 2 seat belt assembly shall withstand a 5,000-pound force when tested in accordance with § 5.1.

S4.2.2 The anchorage for a Type 2 seat belt assembly shall withstand 3,000-pound forces when tested in accordance with S5.2.

S4.2.3 Permanent deformation or rupture of a seat belt anchorage or its surrounding area is not considered to be a failure, if the required force is sustained for the specified time.

S4.2.4 Except for common seat belt anchorages for forward-facing and rearward-facing seats, floor-mounted seat belt anchorages for adjacent designated seating positions shall be tested by simultaneously loading the seat belt assemblies attached to those anchorages.

S4.3 *Location.* As used in this section, "forward" means in the direction in which the seat faces, and other directional references are to be interpreted accordingly.

S4.3.1 *Seat belt anchorages for Type 1 seat belt assemblies and the pelvic portion of Type 2 seat belt assemblies.*

S4.3.1.1 In an installation in which the seat belt does not bear upon the seat frame, a line from the seating reference point to the nearest contact point of the belt with the hardware attaching it to the anchorage for a nonadjustable seat, or from a point 2.50 inches forward of and 0.375 inch above the seating reference point to the nearest contact point of the belt with the hardware attaching it to the anchorage for an adjustable seat in its rearmost position, shall extend forward from the anchorage at an angle with the horizontal of not less than 20° and not more than 75°.

S4.3.1.2 In an installation in which the belt bears upon the seat frame, the seat belt anchorage, if not on the seat structure, shall be aft of the rearmost belt contact point on the seat frame with the seat in the rearmost position. The line from the seating reference point to the nearest belt contact point on the seat frame shall extend forward from that contact point at an angle with the horizontal of not less than 20° and not more than 75°.

S4.3.1.3 In an installation in which the seat belt anchorage is on the seat structure, the line from the seating reference point to the nearest contact point of the belt with the hardware attaching it to the anchorage shall extend forward from that contact point at an angle with the horizontal of not less than 20° and not more than 75°.

S4.3.1.4 Anchorages for an individual seat belt assembly shall be located at least 6.50 inches apart laterally, measured between the vertical centerlines of the bolt holes.

S4.3.2 *Seat belt anchorages for the upper torso portion of Type 2 seat belt assemblies.* With the seat in its full rearward and downward position and the seat back in its most upright position, the seat belt anchorage for the upper end of the upper torso restraint shall be located within the acceptable range shown in Figure 1, with reference to a two dimensional manikin described in SAE Standard J826 (November 1962) whose "H" point is at the seating reference point and whose torso line is at the same angle from the vertical as the seat back.

S5. *Test procedures.* Each vehicle shall meet the requirements of S4.2 when tested according to the following procedures. Where a range of values is specified, the vehicle shall be able to meet the requirements at all points within the range.

S5.1 *Seats with Type 1 or Type 2 seat belt anchorages.* With the seat in its rearmost position, apply a force of 5,000 pounds in the direction in which the seat faces to a pelvic body block as described in Figure 2, restrained by a Type 1 or the pelvic portion of a Type 2 seat belt assembly, as applicable, in a plane parallel to the longitudinal cen-

OFFICE INFORMATION MEMO
RECYCLED PAPER
CARBONS
FINAL COPY
RUSH
DOUBLE SPACE
SINGLE SPACE
ROUGH DRAFT
DATE NEEDED
TYPING:
DATE NEEDED
HEAD TO FOOT
STAPLE
(Other)

terline of the vehicle, with an initial force application angle of not less than 5° nor more than 15° above the horizontal. Apply the force at the onset rate of not more than 50,000 pounds per second. Attain the 5,000-pound force in not more than 30 seconds and maintain it for 10 seconds.

S5.2 *Seats with Type 2 seat belt anchorages.* With the seat in its rearmost position, apply forces of 3,000 pounds in the direction in which the seat faces simultaneously to pelvic and upper torso body blocks as described in Figures 2 and 3, restrained by a Type 2 seat belt assembly, in a plane parallel to the longitudinal centerline of the vehicle, with an initial force application angle of not less than 5° nor more than 15° above the horizontal. Apply the forces at the onset rate of not more than 30,000 pounds per second. Attain the 3,000-pound forces in not more than 30 seconds and maintain them for 10 seconds.

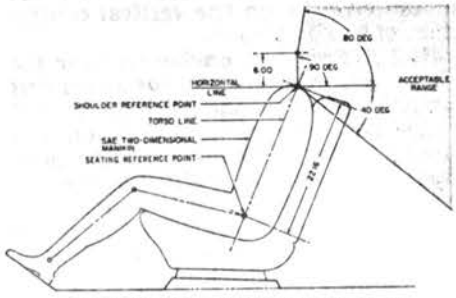

FIGURE 1—LOCATION OF ANCHORAGE FOR UPPER TORSO RESTRAINT

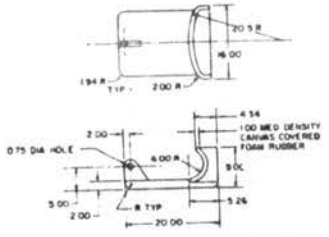

FIGURE 2—BODY BLOCK FOR LAP BELT ANCHORAGE

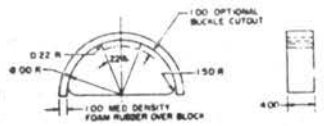

FIGURE 3—BODY BLOCK FOR COMBINATION SHOULDER AND LAP BELT ANCHORAGE

[36 FR 22902, Dec. 2, 1971, as amended at 37 FR 9323, May 9, 1972]

§ 571.211 Standard No. 211; Wheel nuts, wheel discs, and hub caps.

S1. *Purpose and scope.* This standard precludes the use of wheel nuts, wheel discs, and hub caps that constitute a hazard to pedestrians and cyclists.

S2. *Application.* This standard applies to passenger cars, multipurpose passenger vehicles, and passenger car and multipurpose passenger vehicle equipment.

S3. *Requirements.* Wheel nuts, hub caps, and wheel discs for use on passenger cars and multipurpose passenger vehicles shall not incorporate winged projections.

NOTE: A clarification of the term "wheel nuts" as used in the requirements section S3 of § 571.211 has been requested. This section states that "wheel nuts, hub caps, and wheel discs for use on passenger cars and multipurpose passenger vehicles shall not incorporate winged projections." A "wheel nut" is an exposed nut that is mounted at the center or hub of a wheel, and not the ordinary small hexagonal nut, one of several which secures a wheel to an axle, and which is normally covered by a hub cap or wheel disc.

§ 571.212 Standard No. 212; Windshield mounting.

S1. *Purpose and scope.* This standard establishes windshield retention requirements for windshield mountings.

ATTACHMENT 2.

code of federal regulations

49

Transportation

PARTS 200 TO 999

Revised as of October 1, 1977

§ 571.209 Standard No. 209; Seat belt assemblies.

S1. *Purpose and Scope.* This standard specifies requirements for seat belt assemblies.

S2. *Application.* This standard applies to seat belt assemblies for use in passenger cars, multipurpose passenger vehicles, trucks, and buses.

S3. *Definitions.* "Seat belt assembly" means any strap, webbing, or similar device designed to secure a person in a motor vehicle in order to mitigate the results of any accident, including all necessary buckles and other fasteners, and all hardware designed for installing such seat belt assembly in a motor vehicle.

"Pelvic restraint" means a seat belt assembly or portion thereof intended to restrain movement of the pelvis.

"Upper torso restraint" means a portion of a seat belt assembly intended to restrain movement of the chest and shoulder regions.

"Hardware" means any metal or rigid plastic part of a seat belt assembly.

"Buckle" means a quick release connector which fastens a person in a seat belt assembly.

"Attachment hardware" means any or all hardware designed for securing the webbing of a seat belt assembly to a motor vehicle.

"Adjustment hardware" means any or all hardware designed for adjusting the size of a seat belt assembly to fit the user, including such hardware that may be integral with a buckle, attachment hardware, or retractor.

"Retractor" means a device for storing part or all of the webbing in a seat belt assembly.

"Nonlocking retractor" means a retractor from which the webbing is extended to essentially its full length by a small external force, which provides no adjustment for assembly length, and which may or may not be capable of sustaining restraint forces at maximum webbing extension.

"Automatic-locking retractor" means a retractor incorporating adjustment hardware by means of a positive self-locking mechanism which is capable when locked of withstanding restraint forces.

"Emergency-locking retractor" means a retractor incorporating adjustment hardware by means of a locking mechanism that is activated by vehicle acceleration, webbing movement relative to the vehicle, or other automatic action during an emergency and is capable when locked of withstanding restraint forces.

"Seat back retainer" means the portion of some seat belt assemblies designed to restrict forward movement of a seat back.

"Webbing" means a narrow fabric woven with continuous filling yarns and finished selvages.

"Strap" means a narrow nonwoven material used in a seat belt assembly in place of webbing.

"Type 1 seat belt assembly" is a lap belt for pelvic restraint.

"Type 2 seat belt assembly" is a combination of pelvic and upper torso restraints.

"Type 2a shoulder belt" is an upper torso restraint for use only in conjunction with a lap belt as a Type 2 seat belt assembly.

"Type 3 seat belt assembly" is a combination pelvic and upper torso restraint for persons weighing not more than 50 pounds or 23 kilograms and capable of sitting upright by themselves, that is children in the approximate age range of 8 months to 6 years.

S4. *Requirements.*

S4.1 (a) *Single occupancy.* A seat belt assembly shall be designed for use by one, and only one, person at any one time.

(b) *Pelvic restraint.* A seat belt assembly shall provide pelvic restraint whether or not upper torso restraint is provided, and the pelvic restraint shall be designed to remain on the pelvis under all conditions, including collision or rollover of the motor vehicle. Pelvic restraint of a Type 2 seat belt assembly that can be used without upper torso restraint shall comply with requirement for Type 1 seat belt assembly in S4.1 to S4.4.

(c) *Upper torso restraint.* A Type 2 or type 3 seat belt assembly shall provide upper torso restraint without shifting the pelvic restraint into the abdominal region. An upper torso restraint shall be designed to minimize vertical forces on the shoulders and

spine. Hardware for upper torso restraint shall be so designed and located in the seat belt assembly that the possibility of injury to the occupant is minimized.

A Type 2a shoulder belt shall comply with applicable requirements for a Type 2 seat belt assembly in S4.1 to S4.4, inclusive.

(d) *Hardware.* All hardware parts which contact under normal usage a person, clothing, or webbing shall be free from burrs and sharp edges.

(e) *Release.* A Type 1 or Type 2 seat belt assembly shall be provided with a buckle or buckles readily accessible to the occupant to permit his easy and rapid removal from the assembly. A Type 3 seat belt assembly shall be provided with a quickly recognizable and easily operated release arrangement, readily accessible to an adult. Buckle release mechanism shall be designed to minimize the possibility of accidental release. A buckle with release mechanism in the latched position shall have only one opening in which the tongue can be inserted on the end of the buckle designed to receive and latch the tongue.

(f) *Attachment hardware.* A seat belt assembly shall include all hardware necessary for installation in a motor vehicle in accordance with SAE Recommended Practice J800B, Motor Vehicle Seat Belt Installations, September 1965. However, seat belt assemblies designed for installation in motor vehicles equipped with seat belt assembly anchorages that do not require anchorage nuts, plates, or washers, need not have such hardware, but shall have 7/16-20 UNF-2A or 1/2-13UNC-2A attachment bolts or equivalent hardware. The hardware shall be designed to prevent attachment bolts and other parts from becoming disengaged from the vehicle while in service. Reinforcing plates or washers furnished for universal floor installations shall be of steel, free from burrs and sharp edges on the peripheral edges adjacent to the vehicle, at least 0.06 inch in thickness and at least 4 square inches in projected area. The distance between any edge of the plate and the edge of the bolt hole shall be at least 0.6 inch. Any corner shall be rounded to a radius of not less than 0.25 inch or cut so that no corner angle is less than 135° and no side is less than 0.25 inch in length.

(g) *Adjustment.* (1) A Type 1 or Type 2 seat belt assembly shall be capable of adjustment to fit occupants whose dimensions and weight range from those of a 5th-percentile adult female to those of a 95th-percentile adult male. The seat belt assembly shall have either an automatic-locking retractor, an emergency-locking retractor, or an adjusting device that is within the reach of the occupant. A Type 3 seat belt assembly shall be capable of adjustment to fit any child capable of sitting upright and weighing not more than 50 pounds, unless it is specifically labeled for use on a child in a smaller weight range.

(2) A Type 1 or Type 2 seat belt assembly for use in a vehicle having seats that are adjustable shall conform to the requirements of S4.1(g)(1) regardless of seat position. However, if a seat has a back that is separately adjustable, the requirements of S4.1(g)(1) need be met only with the seat back in the manufacturer's nominal design riding position.

(3) The adult occupants referred to in S4.1(g)(1) shall have the following measurements:

	5th-percentile adult female	95th-percentile adult male
Weight	102 lbs.	215 lbs.
Erect sitting height	30.9 in.	38 in.
Hip breadth (sitting)	12.8 in.	16.4 in.
Hip circumference (sitting).	36.4 in.	47.2 in.
Waist circumference (sitting).	23.6 in.	42.5 in.
Chest depth	7.5 in.	10.5 in.
Chest circumference:		
(nipple)	30.5 in.	44.5 in.
(upper)	29.8 in.	
(lower)	26.6 in.	

(h) *Seat back retainer.* A Type 3 seat belt assembly designed for attachment to a seat back or for use in a seat with a hinged back shall include a seat back retainer unless such assembly is designed and labeled for use in specific models of motor vehicles in which the vehicle manufacturer has provided other adequate restraint for the seat back.

(i) *Webbing.* The ends of webbing in a seat belt assembly shall be protected or treated to prevent raveling. The end of webbing in a seat belt assembly having a metal-to-metal buckle that is used by the occupant to adjust the size of the assembly shall not pull out of the adjustment hardware at maximum size adjustment. Provision shall be made for essentially unimpeded movement of webbing routed between a seat back and seat cushion and attached to a retractor located behind the seat.

(j) *Strap.* A strap used in a seat belt assembly to sustain restraint forces shall comply with the requirements for webbing in S4.2, and if the strap is made from a rigid material, it shall comply with applicable requirements in S4.2, S4.3, and S4.4.

(k) *Marking.* Each seat belt assembly shall be permanently and legibly marked or labeled with year of manufacture, model, and name or trademark of manufacturer or distributor, or of importer if manufactured outside the United States. A model shall consist of a single combination of webbing having a specific type of fiber weave and construction, and hardware having a specific design. Webbings of various colors may be included under the same model, but webbing of each color shall comply with the requirements for webbing in S4.2.

(l) *Installation instructions.* A seat belt assembly or retractor shall be accompanied by an instruction sheet providing sufficient information for installing the assembly in a motor vehicle except for a seat belt assembly installed in a motor vehicle by an automobile manufacturer. The installation instructions shall state whether the assembly is for universal installation or for installation only in specifically stated motor vehicles, and shall include at least those items in SAE Recommended Practice, Motor Vehicle Seat Belt Installations—SAE J800b, published by the Society of Automotive Engineers.

(m) *Usage and maintenance instructions.* A seat belt assembly or retractor shall be accompanied by written instructions for the proper use of the assembly, stressing particularly the importance of wearing the assembly snugly and properly loctated on the body, and on the maintenance of the assembly and periodic inspection of all components. The instructions shall show the proper manner of threading webbing in the hardware of seat belt assemblies in which the webbing is not permanently fastened. Instructions for a nonlocking retractor shall include a caution that the webbing must be fully extended from the retractor during use of the seat belt assembly unless the retractor is attached to the free end of webbing which is not subjected to any tension during restraint of an occupant by the assembly. Instructions for Type 2a shoulder belt shall include a warning that the shoulder belt is not to be used without a lap belt.

(n) *Workmanship.* Seat belt assemblies shall have good workmanship in accordance with good commercial practice.

S4.2 *Requirements for webbing.*

(a) *Width.* The width of the webbing in a seatbelt assembly shall be not less than the following when measured under the conditions prescribed in S5.1(a):

(1) Type 1 and Type 2 assemblies—1.8 inches, except for portions that do not touch a 95th percentile adult male with the seat in any adjustment position and the seat back in the manufacturer's nominal design riding position.

(2) Type 3 seatbelt assembly—0.9 inch.

(b) *Breaking strength.* The webbing in a seat belt assembly shall have not less than the following breaking strength when tested by the procedures specified in S5.1(b): Type 1 seat belt assembly—6,000 pounds or 2,720 kilograms; Type 2 seat belt assembly—5,000 pounds or 2,270 kilograms for webbing in pelvic restraint and 4,000 pounds or 1,810 kilograms for webbing in upper torso restraint; Type 3 seat belt assembly—1,500 pounds or 680 kilograms for webbing in pelvic and upper torso restraints, 4,000 pounds or 1,810 kilograms for webbing in seat back retainer and for webbing connecting pelvic and upper torso restraints to attachment hardware when assembly has single webbing connection, or 3,000 pounds or 1,360 kilograms for webbing connecting pelvic

and upper torso restraint to attachment hardware when assembly has two or more webbing connections.

(c) *Elongation.* The webbing in a seat belt assembly shall not extend to more than the following elongations when subjected to the specified forces in accordance with the procedure specified in S5.1(c): Type 1 seat belt assembly—20 percent at 2,500 pounds or 1,130 kilograms; Type 2 seat belt assembly—30 percent at 2,500 pounds or 1,130 kilograms for webbing in pelvic restraint and 40 percent at 2,500 pounds or 1,130 kilograms for webbing in upper torso restraint; Type 3 seat belt assembly—20 percent at 700 pounds or 320 kilograms for webbing in pelvic and upper torso restraints, and 25 percent at 2,500 pounds or 1,130 kilograms for webbing in seat back retainer and for webbing connecting pelvic and upper torso restraints to attachment hardware when assembly has single webbing connection, or 25 percent at 1,800 pounds or 820 kilograms for webbing connecting pelvic and upper torso restraints to attachment hardware when assembly has two or more webbing connections.

(d) *Resistance to abrasion.* The webbing of a seatbelt assembly, after being subjected to abrasion as specified in either S5.1(d) or S5.3(d), shall have a breaking strength of not less than 75 percent of the breaking strength listed in S4.2(b) for that type of belt assembly.

(e) *Resistance to light.* The webbing in a seat belt assembly after exposure to the light of a carbon arc and tested by the procedure specified in S5.1(e) shall have a breaking strength not less than 60 percent of the strength before exposure to the carbon arc and shall have a color retention not less than No. 2 on the Geometric Gray Scale published by the American Association of Textile Chemists and Colorists, Post Office Box 886, Durham, N.C.

(f) *Resistance to micro-organisms.* The webbing in a seat belt assembly after being subjected to micro-organisms and tested by the procedures specified in S5.1(f) shall have a breaking strength not less than 85 percent of the strength before subjection to micro-organisms.

(g) *Colorfastness to crocking.* The webbing in a seat belt assembly shall not transfer color to a crock cloth either wet or dry to a greater degree than Class 3 on the AATCC Chart for Measuring Transference of Color published by the American Association of Textile Chemists and Colorists, when tested by the procedure specified in S5.1(g).

(h) *Colorfastness to staining.* The webbing in a seat belt assembly shall not stain to a greater degree than Class 3 on the AATCC Chart for Measuring Transference of Color published by the American Association of Textile Chemists and Colorists, when tested by the procedure specified in S5.1(h).

S4.3 *Requirements for hardware.*

(a) *Corrosion resistance.* (1) Attachment hardware of a seat belt assembly after being subjected to the conditions specified in S5.2(a) shall be free of ferrous corrosion on significant surfaces except for permissible ferrous corrosion at peripheral edges or edges of holes on underfloor reinforcing plates and washers. Alternatively, such hardware at or near the floor shall be protected against corrosion by at least a Type KS electrodeposited coating of nickel, or copper and nickel, and other attachment hardware shall be protected by a Type QS electrodeposited coating of nickel or copper and nickel, in accordance with Tentative Specifications for Electrodeposited Coatings of Nickel and Chromium on Steel, ASTM Designation: A166-61T, published by the American Society for Testing and Materials, 1916 Race Street, Philadelphia, Pa. 19103, but such hardware shall not be racked for electroplating in locations subjected to maximum stresses.

(2) Surfaces of buckles, retractors and metallic parts, other than attachment hardware, of a seat belt assembly after subjection to the conditions specified in S5.2(a) shall be free of ferrous or nonferrous corrosion which may be transferred, either directly or by means of the webbing, to the occupant or his clothing when the assembly is worn. After test, buckles shall conform to applicable requirements in paragraphs (d) to (g) of this section.

RECYCLED PAPER
CARBONS
FINAL COPY
RUSH
DOUBLE SPACE
SINGLE SPACE
ROUGH DRAFT
DATE NEEDED
TYPING:
DATE NEEDED
HEAD TO FOOT
STAPLE
(Other)

(b) *Temperature resistance.* Plastic or other nonmetallic hardware parts of a seat belt assembly when subjected to the conditions specified in S5.2(b) shall not warp or otherwise deteriorate to cause the assembly to operate improperly or fail to comply with applicable requirements in this section and S4.4.

(c) *Attachment hardware.* (1) Eye bolts, shoulder bolts, or other bolts used to secure the pelvic restraint of a seat belt assembly to a motor vehicle shall withstand a force of 9,000 pounds or 4,080 kilograms when tested by the procedure specified in S5.2(c)(1), except that attachment bolts of a seat belt assembly designed for installation in specific models of motor vehicles in which the ends of two or more seat belt assemblies cannot be attached to the vehicle by a single bolt shall have a breaking strength of not less than 5,000 pounds or 2,270 kilograms.

(2) Other attachment hardware designed to receive the ends of two seat belt assemblies shall withstand a tensile force of at least 6,000 pounds or 2,720 kilograms without fracture of any section when tested by the procedure specified in S5.2(c)(2).

(3) A seat belt assembly having single attachment hooks of the quick-disconnect type for connecting webbing to an eye bolt shall be provided with a retaining latch or keeper which shall not move more than 0.08 inch or 2 millimeters in either the vertical or horizontal direction when tested by the procedure specified in S5.2(c)(3).

(d) *Buckle release.* (1) The buckle of a Type 1 or Type 2 seat belt assembly shall release when a force of not more than 30 pounds or 14 kilograms is applied, and the buckle of a Type 3 seat belt assembly shall release when a force of not more than 20 pounds or 9 kilograms is applied as prescribed in S5.2.

(2) A buckle designed for pushbutton application of buckle release force shall have a minimum area of 0.7 square inch or 4.5 square centimeters with a minimum linear dimension of 0.4 inch or 10 millimeters for applying the release force, or a buckle designed for lever application of buckle release force shall permit the insertion of a cylinder 0.4 inch or 10 millimeters in diameter and 1.5 inches or 38 millimeters in length to at least the midpoint of the cylinder along the cylinder's entire length in the actuation portion of the buckle release. A buckle having other design for release shall have adequate access for two or more fingers to actuate release.

(3) The buckle of a Type 1 or Type 2 seat belt assembly shall not release under a compressive force of 400 pounds applied as prescribed in paragraph S5.2(d)(3). The buckle shall be operable and shall meet the applicable requirement of paragraph S4.4 after the compressive force has been removed.

(e) *Adjustment force.* The force required to decrease the size of a seat belt assembly shall not exceed 11 pounds or 5 kilograms when measured by the procedure specified in S5.2(e).

(f) *Tilt-lock adjustment.* The buckle of a seat belt assembly having tilt-lock adjustment shall lock the webbing when tested by the procedure specified in S5.2(f) at an angle of not less than 30 degrees between the base of the buckle and the anchor webbing.

(g) *Buckle latch.* The buckle latch of a seat belt assembly when tested by the procedure specified in S5.2(g) shall not fail, nor gall or wear to an extent that normal latching and unlatching is impaired, and a metal-to-metal buckle shall separate when in any position of partial engagement by a force of not more than 5 pounds or 2.3 kilograms.

(h) *Nonlocking retractor.* The webbing of a seat belt assembly shall extend from a nonlocking retractor within 0.25 inch or 6 millimeters of maximum length when a tension is applied as prescribed in S5.2(h). A nonlocking retractor on upper-torso restraint shall be attached to the nonadjustable end of the assembly, the reel of the retractor shall be easily visible to an occupant while wearing the assembly, and the maximum retraction force shall not exceed 1.1 pounds or 0.5 kilogram in any strap or webbing that contacts the shoulder when measured by the procedure specified in S5.2(h), unless the retractor is attached to the free end of webbing which is not subjected to any tension during restraint of an occupant by the assembly.

(i) *Automatic-locking retractor.* The webbing of a seat belt assembly equipped with an automatic locking retractor, when tested by the procedure specified in S5.2(i), shall not move more than 1 inch or 25 millimeters between locking positions of the retractor, and shall be retracted with a force under zero acceleration of not less than 0.6 pound or 0.27 kilogram when attached to pelvic restraint, and not less than 0.45 pound or 0.2 kilogram nor more than 1.1 pounds or 0.5 kilogram in any strap or webbing that contacts the shoulders of an occupant when the retractor is attached to upper torso restraint. An automatic locking retractor attached to upper torso restraint shall not increase the restraint on the occupant of the seat belt assembly during use in a vehicle traveling over rough roads as prescribed in S5.2(i).

(j) *Emergency-locking retractor.* An emergency-locking retractor of a Type 1 or Type 2 seatbelt assembly, when tested in accordance with the procedures specified in paragraph S5.2(j)—

(1) Shall lock before the webbing extends 1 inch when the retractor is subjected to an acceleration of 0.7g;

(2) Shall not lock, if the retractor is sensitive to webbing withdrawal, before the webbing extends 2 inches when the retractor is subjected to an acceleration of 0.3g or less;

(3) Shall not lock, if the retractor is sensitive to vehicle acceleration, when the retractor is rotated in any direction to any angle of 15° or less from its orientation in the vehicle;

(4) Shall exert a retractive force of at least 0.6 pound under zero acceleration when attached only to the pelvic restraint.

(5) Shall exert a retractive force of not less than 0.2 pound and not more than 1.1 pounds under zero acceleration when attached only to an upper torso restraint;

(6) Shall exert a retractive force of not less than 0.2 pound and not more than 1.5 pounds under zero acceleration when attached to a strap or webbing that restrains both the upper torso and the pelvis.

(k) *Performance of retractor.* A retractor used on a seat belt assembly after subjection to the tests specified in S5.2(k) shall comply with applicable requirements in paragraphs (h) to (j) of this section and S4.4, except that the retraction force shall be not less than 50 percent of its original retraction force.

S4.4 Requirements for assembly performance.

(a) *Type 1 seat belt assembly.* The complete seat belt assembly including webbing, straps, buckles, adjustment and attachment hardware, and retractors shall comply with the following requirements when tested by the procedures specified in C5.3(a):

(1) The assembly loop shall withstand a force of not less than 5,000 pounds or 2,270 kilograms; that is, each structural component of the assembly shall withstand a force or not less than 2,500 pounds or 1,130 kilograms.

(2) The assembly loop shall extend not more than 7 inches or 18 centimeters when subjected to a force of 5,000 pounds or 2,270 kilograms; that is, the length of the assembly between anchorages shall not increase more than 14 inches or 36 centimeters.

(3) Any webbing cut by the hardware during test shall have a breaking strength at the cut of not less than 4,200 pounds or 1,910 kilograms.

(4) Complete fracture through any solid section of metal attachment hardware shall not occur during test.

(b) *Type 2 seat belt assembly.* The components of a Type 2 seat belt assembly including webbing, straps, buckles, adjustment and attachment hardware, and retractors shall comply with the following requirements when tested by the procedure specified in S5.3(b):

(1) The structural components in the pelvic restraint shall withstand a force of not less than 2,500 pounds or 1,130 kilograms.

(2) The structural components in the upper torso restraint shall withstand a force of not less than 1,500 pounds or 680 kilograms.

(3) The structural components in the assembly that are common to pelvic and upper torso restraints shall withstand a force of not less than 3,000 pounds or 1,360 kilograms.

(4) The length of the pelvic restraint between anchorages shall not increase

RECYCLED PAPER
CARBONS
FINAL COPY
RUSH
DOUBLE SPACE
SINGLE SPACE
ROUGH DRAFT
DATE NEEDED
TYPING:
DATE NEEDED
HEAD TO FOOT
STAPLE
(Other)
TO
FROM

more than 20 inches or 50 centimeters when subjected to a force of 2,500 pounds or 1,130 kilograms.

(5) The length of the upper torso restraint between anchorages shall not increase more than 20 inches or 50 centimeters when subjected to a force of 1,500 pounds or 680 kilograms.

(6) Any webbing cut by the hardware during test shall have a breaking strength of not less than 3,500 pounds or 1,590 kilograms at a cut in webbing of the pelvic restraint, or not less than 2,800 pounds or 1,270 kilograms at a cut in webbing of the upper torso restraint.

(7) Complete fracture through any solid section of metal attachment hardware shall not occur during test.

(c) *Type 3 seat belt assembly.* The complete seat belt assembly including webbing, straps, buckles, adjustment and attachment hardware, and retractors shall comply with the following requirements when tested by the procedures specified in S5.3(c):

(1) The complete assembly shall withstand a force of 2,000 pounds or 900 kilograms.

(2) The complete assembly shall extend not more than 12 inches or 30 centimeters when subjected to a force of 2,000 pounds or 900 kilograms.

(3) Any webbing cut by the hardware during test shall have a breaking strength of not less than 1,050 pounds or 480 kilograms at a cut in webbing of pelvic or upper torso restraints, or not less than 2,800 pounds or 1,270 kilograms at a cut in webbing of seat back retainer or in webbing connecting pelvic and upper torso restraint at attachment hardware.

(4) Complete fracture through any solid section of metal attachment hardware shall not occur during test.

S5 *Demonstration Procedures.*

S5.1 *Webbing.* (a) *Width.* The width of webbing from three seat belt assemblies shall be measured after conditioning for at least 24 hours in an atmosphere having relative humidity between 48 and 67 percent and a temperature of 23°±2° C. or 73.4±3.6° F. The tension during measurement of width shall be not more than 5 pounds or 2 kilograms on webbing from a Type 1 or Type 3 seat belt assembly, and 2,200±100 pounds or 1,000±50 kilograms on webbing from a Type 2 seat belt assembly. The width of webbing from a Type 2 seat belt assembly may be measured during the breaking strength test described in paragraph (b) of this section.

(b) *Breaking strength.* Webbing from three seat belt assemblies shall be conditioned in accordance with paragraph (a) of this section and tested for breaking strength in a testing machine of suitable capacity verified to have an error of not more than 1 percent in the range of the breaking strength of the webbing by the Tentative Methods of Verification of Testing Machines, ASTM Designation: E4-64, published by the American Society for Testing and Materials, 1916 Race Street, Philadelphia, Pa. 19103.

The machine shall be equipped with split drum grips illustrated in Figure 1, having a diameter between 2 and 4 inches or 5 and 10 centimeters. The rate of grip separation shall be between 2 and 4 inches per minute or 5 and 10 centimeters per minute. The distance between the centers of the grips at the start of the test shall be between 4 and 10 inches or 10 and 25 centimeters. After placing the specimen in the grips, the webbing shall be stretched continuously at a uniform rate to failure. Each value shall be not less than the applicable breaking strength requirement in S4.2(b), but the median value shall be used for determining the retention of breaking strength in paragraphs (d), (e), and (f) of this section.

(c) *Elongation.* Elongation shall be measured during the breaking strength test described in paragraph (b) of this section by the following procedure: A preload between 44 and 55 pounds or 20 and 25 kilograms shall be placed on the webbing mounted in the grips of the testing machine and the needle points of an extensometer, in which the points remain parallel during test, are inserted in the center of the specimen. Initially the points shall be set at a known distance apart between 4 and 8 inches or 10 and 20 centimeters. When the force on the webbing reaches the value specified in S4.2(c), the increase in separation of the points of the extensometer shall be measured and the percent elonga-

DPS #9

Housing Finance Agency

Notice of Intent to Solicit Outside Opinion on Rules Governing Housing Programs for Urban American Indians

Notice is hereby given that the Minnesota Housing Finance Agency is seeking information or opinions from sources outside the agency in preparing to propose the adoption of rules governing housing programs for urban Native Americans. These rules are authorized by Laws of 1978, ch. 770.

To facilitate the gathering of information, informational meetings will be held at various locations throughout the state. The second such meeting will be held in St. Paul, Minnesota at the St. Paul American Indian Center, 1001 Payne Avenue, on June 26, 1978 at 7:00 p.m. Any interested persons may submit data or reviews on this subject in writing or orally at this meeting.

Written material may also be submitted to:

May Hutchinson
Minnesota Housing Finance Agency
200 Nalpak Building
333 Sibley Street
St. Paul, MN 55101

Any written material received shall become a part of the hearing record in the event rules governing the subject matter are promulgated.

James J. Solem
Executive Director

Department of Public Safety Highway Patrol Division

Notice of Intent to Solicit Outside Opinion Regarding Proposed Standards for Wheelchair Securement Devices

Notice is hereby given that the Department of Public Safety is seeking information, comments and opinions from sources outside the department in preparing to draft and propose rules relating to wheelchair securement devices. Such rules are authorized by Laws of 1978, ch. 752.

The rules are required by ch. 752 to contain standards for wheelchair securement devices in vehicles used to provide transportation service to wheelchair occupants. Ch. 752 specifies the following criteria:

1. The device must prevent any forward, backward or lateral movement of an occupied wheelchair, when the device is engaged and the vehicle is in motion, accelerating or braking.

2. The device must attach to the frame of the wheelchair without damaging it.

3. The vehicle must contain seat belts, meeting applicable state and federal regulations, for the purpose of securing the occupant of the wheelchair and not for securing the wheelchair.

All interested or affected persons or groups are invited to provide information on this subject until August 1, 1978 to:

Major Richard Lueck
State Highway Patrol
107 Transportation Building
St. Paul, MN 55155

Written statements will be made part of the public hearing record.

Department of Human Rights

Pre-determination Agreements, June 2, 1978 through June 9, 1978

A pre-determination agreement is an agreement reached before the commissioner has determined whether or not there is reason to believe that a discriminatory practice occurred. It is signed by the charging party, the respondent, and the commissioner. By entering into a pre-determination agreement, a respondent makes no admission that a discriminatory practice has occurred. Pre-determination agreements were reached between the department, charging parties, and the following respondents:

Mackay Envelope Company, E4910
Greif Brothers, E5072
Thorp Credit and Thrift Company, E4670
Tonka Toys, E4821
Montgomery Ward, PA341
Minneapolis Civil Service Commission, E4008, E3667, E3024, RP43
American Hoist, E4815
Independent School District #833, E5042
Sutton Place, PA265
Anderson Window Corporation, E4872
St. Paul Book and Stationery, E5026

(2)

May 23, 1979

RECEIVED
MAY 24 1979
OFFICE OF HEARING EXAMINERS

Mr. Peter Erickson
Office of Hearing Examiners
1745 University Avenue
St. Paul, Minnesota 55104

Dear Mr. Erickson,

After studying the proposed rules regarding Standards for Wheelchair Securement Devices, I have reached the conclusion that it is far too early to be trying to specify the minute degree of detail that is being promulgated in them. I base this on the following facts, observations, and 10 year experience as a transportation director in trying to provide for these types of services.

1) There has not been enough empirical research by the industry manufacturers of these products - If there is adequate research, it has not been brought to the attention of the user in the manner in which these standards propose to use it.

2) There has not been enough research time for the industry and the end user to have dialogue - do analytical research, make findings of fact and possibly even come up with new ideas and concepts that could work. To my knowledge, there is not even agreement by the industry to do it.

3) The department of public safety, by its own admission, has not been able to find working models or programs to pattern sound rules after. This is not a reflection on the department of public safety but rather points out how little information (practically) there is to draw from.

The fact that school districts and tax payers alike are still feeling effects of other recent handicap regulations that have been extremely expensive - much misunderstood and without provision for funding.

I would recommend the rules be delayed until: 1) Adequate research with industry can be developed. 2) Adequate funding is provided for educational workshops so school districts and handicapped people properly understand the intent of the rules.

At the present time, the school transportation industry faces severe driver shortages - the additional burden of responsibility placed on them will only add to this problem.

I am not against rules and regulations; however, I do believe there should be an orderly process that does not create more problems than it solves.

Sincerely,

Leonard L. Sutherland

State of Minnesota

Department of Education
Capitol Square, 550 Cedar Street
St. Paul, Minnesota 55101

RECEIVED
MAY 23 1979
OFFICE OF HEARING
EXAMINERS

May 23, 1979

(3)

Peter Erickson
Office of Hearing Examiners
1745 University Ave., Room 300
St. Paul, Minnesota 55104

Dear Mr. Erickson:

The purpose of this letter is to comment on the Department of Public Safety's proposed rules Chapter 21, Standard For Wheelchair Securement Devices.

First, we feel that it is imperative to define the term, "wheelchair." Many types of wheeled devices are used for ill and handicapped individuals. Without a clear definition, many questions will be raised about the applicability of the rules which are adopted.

We submit that the definition should include the following concepts:

a. "wheelchair" should apply to devices in which the individual is transported in what is basically a seated position,

b. the rules should apply only when the weight of the "wheelchair" and occupant are supported on the floor of the transporting vehicle. (This would exclude from the rules certain devices which, although equipped with wheels for easy mobility, are supported by a vehicle seat during actual transportation in the vehicle.)

A second comment is more general in nature. Because of the many different types of handicaps, it is important that rules be as flexible as possible so that service may be provided to as many individuals as possible. We believe that the Legislature intended to make safe transportation available to more handicapped individuals. If the rules adopted are too restrictive, they may have the effect of limiting or reducing the availability of transportation for the handicapped.

Your consideration of these matters will be appreciated.

Sincerely,

G. Pavek

G. Pavek, Director
Pupil Transportation

RECEIVED
MAY 25 1979
OFFICE OF HEARING
EXAMINERS

May 22, 1979

(4)

Peter Erickson
Office Of Hearing Examiner
1745 University Avenue
St. Paul, MN 55104

Dear Mr. Erickson:

Enclosed are additional slides provided by Willmar Bus Service depicting variations in wheelchairs and stretchers used to transport handicapped persons at the Willmar State Hospital. The slides may be used in addition to those shown at the May 17, 1979 hearing on proposed rules governing minimum standards for wheelchair securement devices.

The following revisions were read as part of the Rules As Proposed by Representatives of Minnesota School Bus Industry:

11 MCAR 1.0188 Purpose and Authority

Change to read as follows:

D. Wheelchair securement device. An apparatus installed in a motor vehicle for the purpose of securing an occupied wheelchair into a location in the vehicle.

11 MCAR 1.019C Effective dates.

Change the last sentence to read:

After July 1, 1979, no person shall be transported in a wheelchair without the use of a securement device, and restraint device.

Sincerely,

Raymond F. Kroll
Minnesota School Bus
Industry Spokesman

RFK/dh
cc: Joe Beaton
Chuck Hey
Gerald Pavek
Doyle Tomhave
Industry Representatives

INDEPENDENT SCHOOL DISTRICT 281

4124 WINNETKA AVE. NO. • MINNEAPOLIS, MINNESOTA 55427
PHONE 612 — 533-2781

RECEIVED
MAY 24 1979
OFFICE OF HEARING EXAMINERS

May 22, 1979

(5)

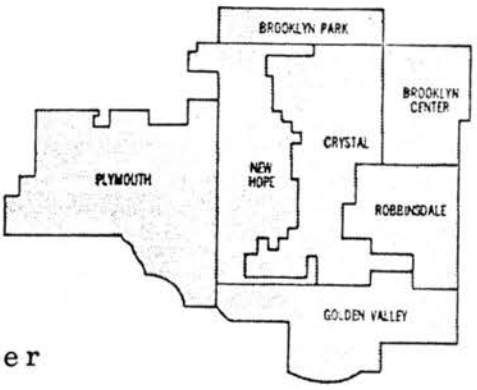

From:
ROBERT A. LARSEN
SUPERVISOR OF TRANSPORTATION AND CENSUS

To: Mr. Peter ERICKSON, Hearing Examiner
Office of Hearing Examiners
1745 University Avenue
St. Paul, MINNESOTA 55

Subject: Minimum Standards for WHEELCHAIR SECUREMENT DEVICES
request to delay the effective date of these regulations.

1. WHERE can one see this "all-purpose securement device", for a look-see demonstration ?

2. Is there a cost estimate on the device ? and where is it manufactured and what is the availability ?

3. Where was the 'field-testing' performed ?
I have talked to a number of school bus fleet operators, both the district owned / operated as well as private contractors -- THE "People Movers" for whom this legislation was written; and, no one seems to know anything about the device, the research behind it, etc.

We have a state-wide association of school bus pupil transportation supervisors, directors, etc., (M.A.P.T. - Minnesota Association for Pupil Transportation) with both years of practical everyday handling of Handicapped Students as well as many special vehicles performing this special type of daily to and from school transportation; to our knowledge, few if any, of these types of experienced and knowledgable people were contacted for either in-put or reseach on this securement device item !

To me, this should have been THE research and development labratory where practical everyday expermintation could and should have been done.

We are all very knowledgable of the many different kinds of carrying devices used for the transportation of the handicapped student - from the plain wooden boxes to the sophisticated motorized wheel chairs(?).....and I dare say, every one of us would gladly have contributed time, knowledge, expertise, etc., to help research such a project.

(cont'd)

How can an item of such "SAFETY IMPORTANCE" be mandated for School Bus Pupil Transportation when there aren't even local, state or federal standards on the "OBJECT" to be secured, i.e. the "wheelchair" (?) ala people carrying vehicle/device ? (question: WHAT is the legal definition of a "WHEELCHAIR" ?).

Is this 'securment device' to be used only on "wheel chairs" ? and, in reference to Chapter 21 11 MCAR 1.0188 A. Purpose ; what about boxes and similar 'carrying devices' that some children are transported in ? Why isn't there a definition of a "WHEELCHAIR" included here ?.....after all, the safe transportation of the "wheelchair"(?) is the object of the entire regulation isn't it ? Therefore, a definition of the "Object to be transported" certainly is in order.

Are all "wheelchairs (?) referred to of the same construction, the same design and configuration, thus able to be secured in the same manner (requirement) that the author(s) of the regulation intend them to be ? Could a 'motorized wheelchair (?)' (if this be the correct terminology?) be secured in the same manner as the various other kinds of "carrying devices" used to transport people ?

Is the assumption made that lacking local, state or federal standards for handicapped/special education vehicles, buses, vans, et cetera, mean that this 'securement device can be installed in any vehicle for the transportation of handicapped persons, i.e. pick-ups, vans, buses, etc. ?

(6)

There are six major School Bus Body manufacturers East of the Mississippi River (and the Rocky Mountains); two (2) West of the Rockies and some smaller van type companies whose primary purpose in business is the manufacturing and equipping of school buses for pupil transportation The six (6) are: (in alphabetical order with their locations)

BlueBird ..... Fort Valley, Georgia
Carpenter ..... Mitchell, Indiana
Superior ..... Lima, Ohio
Thomas ..... High Point, North Carolina
Ward ..... Conway, Arkansas
Wayne ..... Richmond, Indiana

plus the two West Coast companies:

Crown Coach ..... Los Angeles, Calif.
Gilleg ..... Hayward, Calif.

these companies I'm sure would be most interested inasmuch as they would obviously have to "tool up" in order to qualify for the "Minnesota Regulations" in the absence of Federal or State Guidelines, Minimum Standards or Specifications for the construction of such vehicles.

All of the six above listed companies supply "regular" school buses at the present time to the many public &private schools as well as the private contractor operators thru-out the State of Minnesota.

Were any of the above school bus body manufacturers contacted as to WHAT they currently have in their line that would be available and

(cont'd)

could qualify for Minnesota ? (reference: 11 MCAR 1.0189 Definitions A. Anchorage .....transferring wheelchair securement loads to the vehicle structure.)

I'm sure the school bus body manufacturers would be extremely interested in knowing if their equipment could qualify for this "Minnesota Accessory Equipment" Regulations and, especially in the public school 'low bid situations" !!!! The factory representatives of any or all of these companies would be most happy to sit down and assist in putting to-gether minimum standards, specifications and/or guideleines PRIOR to their "tooling up" for Minnesota school bus body business.

As Past President of the National Association for Pupil Transportation, I am particularly aware of situations of this nature where you involve 50 states with their individual ideas plus federal minimum standards and with only SIX (6) companies manufacturing the school buses you need, it really doesn't leave a whole lot of room for "individual differences".....and, to date there aren't many states that are in a position to 'custom manufacture" their own school buses. You more or less are at the mercy of the mahufacturer and what he can and will supply. It's the old story of the assembly line production.

We as fleet supervisors/directors, etc., are very cost conscious these days and with increasing costs, limitations, budget trimming, would find it extremely hard to add additional expenses without some much needed financial assistance ! Will there be money appropriated for the express purpose of purchasing this specially designed equipment

The big question asked by many fleet operators who are doing a good job in furnishing special transportation now is: WHAT REALLY IS WRONG WITH WHAT WE ARE DOING AT THE PRESENT TIME ? and, specifically speaking !!

With this in mind, I respectfully request a delay in the effective date of these regulations on the Securement Devices.

Respectfully submitted,

R.A. "Bob" LARSEN, Supervisor
Robbinsdale Area Schools
suburban Minneapolis, Minnesota

p.s. addendum: Maybe a state-wide organization should be formed of the Handicapped people along with their Legislature people who write the regulations to:

1. Draw up and write the minimum standards for all such special equipment, wheel chairs (?) and / or carrying devices,
2. Have money appropriated to purchase the equipment, train drivers

(cont'd)

and monitors and personnel in the handling of handicapped persons

and,

3. Issue all such Special equipment, vehicles, etc. to the school districts involved when it is needed.

This could be a state-wide pool, administered by the Special Education Handicapped people themselves; not every school district needs this kind of 'single purpose special equipment' all of the time or every year. A state-wide purchasing, acquisition and inventory system could be instituted, the equipment could be issued to the schools where it is needed thus saving the tax payers a whole lot of money !!!!!!

There are several states where state-wide purchasing is a common practice; South Carolina does this in their school buses - both the regular buses as well as their Special Education equipment .....(I just recently returned from a school district where I observed this.) Ohio and Texas are two other states where state-wide purchasing is a common practice. It seems to be working there with satisfactory results, and, really merits study and investigation by Minnesota people.

encl;

Franelock™ WHEELCHAIR Holder

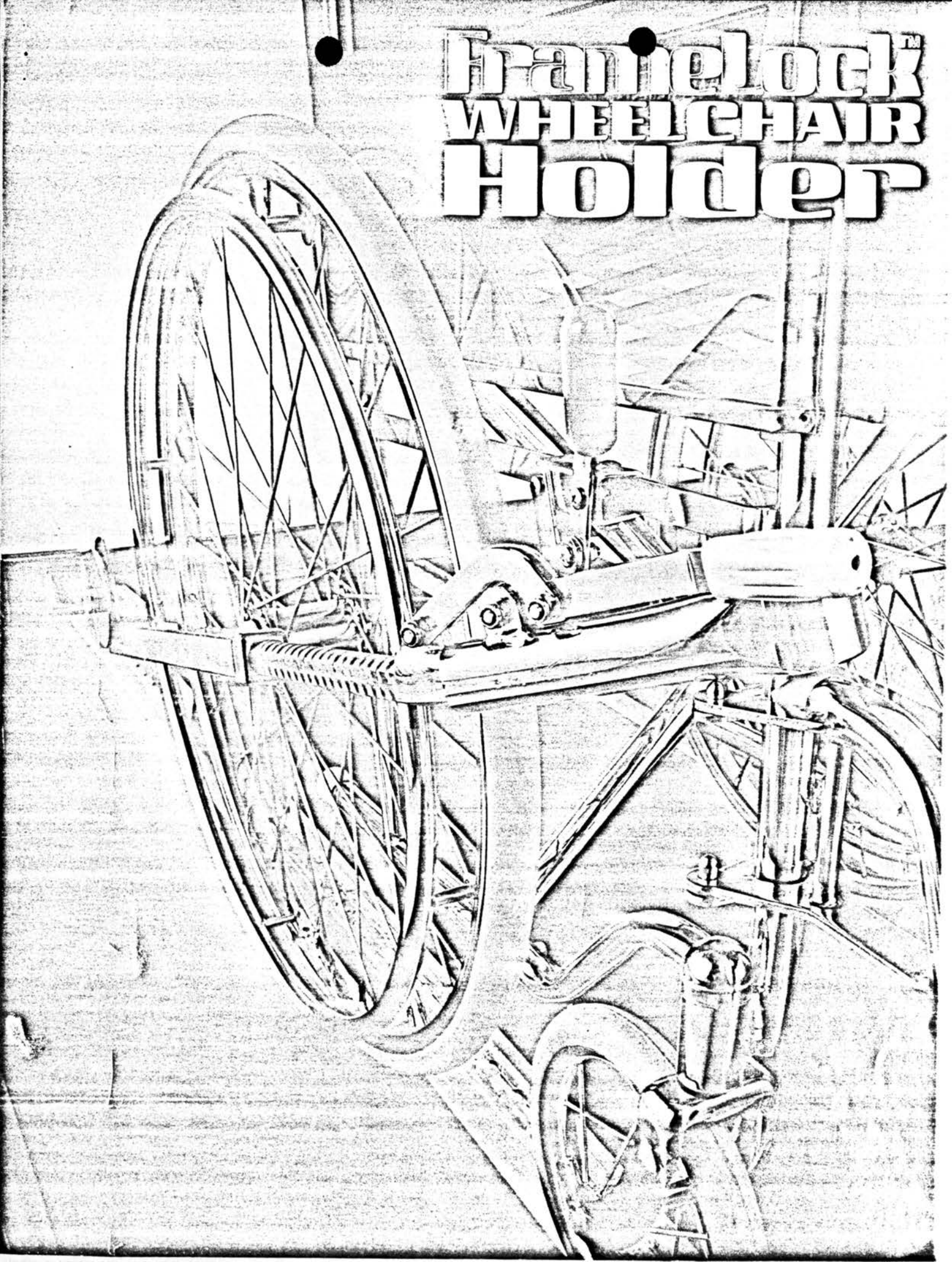

Framelock™ WHEELCHAIR Holder

Framelock is a new and versatile system which gives complete interchangeability from conventional seating to forward, rearward or side facing wheelchair positions. This newly developed system is

SAFE • SIMPLE • SECURE

Interchangeable Seat or Wheelchair Installation

Special aluminum alloy, tapered profile, floor track is designed for attachment to the floor. The track provides mounting for conventional seat or special mounting for forward or rearward facing wheelchair position. Patented "lock on - lift off" design allows fast and simple change without tools.

Framelock™ Holds Wheelchair Firmly

The patented Framelock™ arm assembly attaches to the "T" slide and allows easy adjustment laterally and horizontally to fit virtually all wheelchair designs. The arm is secured to the wheelchair frame with an easily operated over center lock. When the Framelock™ arm is secured in place there can be no movement of the wheelchair in any direction.

The Framelock™ Wheelchair Holder has been thoroughly tested by an independent testing laboratory. The copy below is a summary report of the test results. The full report is available on request.

SHELLER-GLOBE CORPORATION
Vehicle Planning and Development Center
3555 ST. JOHNS ROAD
LIMA, OHIO 45804
TELEPHONE 419/227-7772

TEST REPORT # EE-194-78
DATE ISSUED: 7-31-78
FILE # 1143

ENGINEERING EVALUATION TEST REPORT
SUMMARY

MATERIAL OR PRODUCT TESTED WHEELCHAIR HOLDER AND INTERCHANGEABLE SEAT WHEELCHAIR SYSTEM DEFINED ON ATTACHED CHAS. OLSON & SONS BROCHURE SHOWN ON PAGE 6

TEST DESCRIPTION TO TEST THE INTEGRITY OF A WHEELCHAIR HOLDER AND INTERCHANGEABLE SEAT/WHEELCHAIR SYSTEM PER LETTER OF REQUEST DATED 5-23-78 (SEE PAGE 5)

CONTROLLING SPEC OR STANDARD (1) WHEELCHAIR VERSION - FMVSS 207 "SEATING SYSTEMS" (2) SCHOOL BUS SEAT VERSION - FMVSS 222 "SCHOOL BUS PASSENGER SEATING & CRASH PROTECTION"

CONCLUSIONS (1) THE ADJUSTABLE WHEELCHAIR LOCKING ARMS WITHSTOOD A FORCE WHICH EXCEEDS THE REQUIREMENTS OF FMVSS 207 FOR THE WHEELCHAIR USED. (2) THE LOW PROFILE GUIDE RAILS USED IN CONJUNCTION WITH A 30" INTERCHANGEABLE SEAT EXCEEDS THE REQUIREMENTS OF FMVSS 222 FORWARD PERFORMANCE.

Test Conducted by G.Wells/R.McNeal Date 6-6 & 7-6-78
Test Engineer I. W. Strayer (Acting) Date 6-6 & 7-6-78
Manager, Vehicle Development I. W. Strayer Date 7-31-78

The side facing position of the wheelchair is accomplished by attaching the "T" slide to the side of the vehicle.



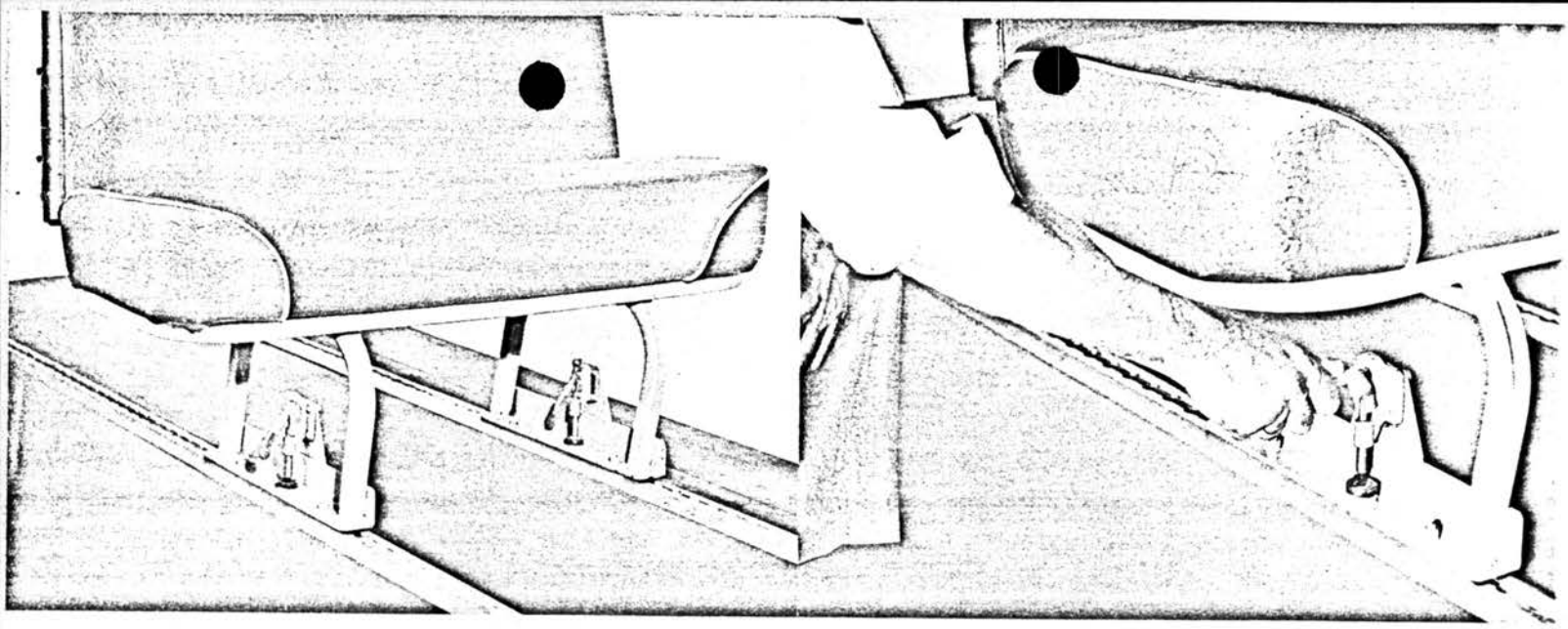

1 Special aluminum alloy, tapered profile, floor tracks attach permanently to floor of vehicle and hold seat securely in place for conventional seating.

2 The simple "lock on - lift off" device makes it easy to interchange seat or wheelchair.

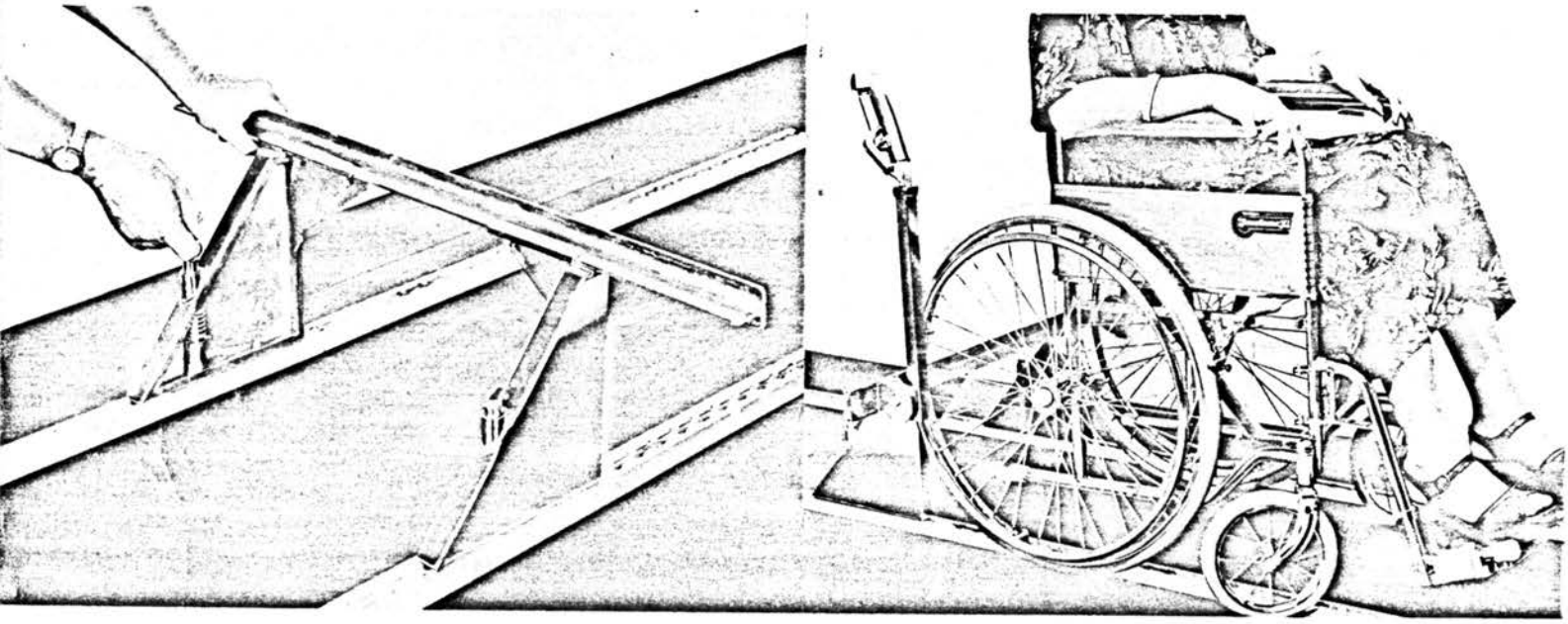

3 The panel assemblies, with "T" slide, are easily dropped into the floor tracks to provide forward or rearward facing wheelchair positions.

4 The wheelchair is positioned in place. Note that the securing device is held in a vertical position through a cam action against the "T" slide. This clears the floor area for unobstructed wheelchair positioning.

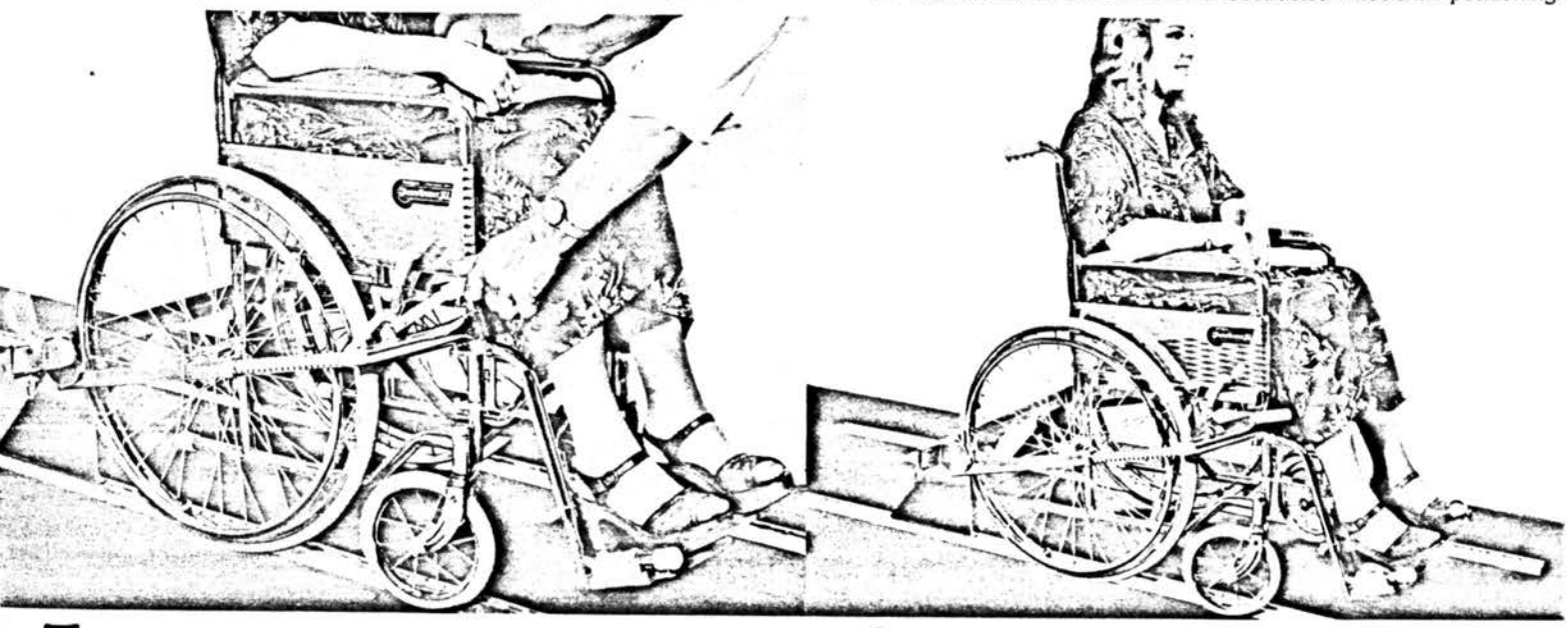

5 Lateral and length adjustments of the holder is fast and simple. The over center lock permits fast, solid attachment to the wheelchair frame.

6 Wheelchair passenger enjoys ride with virtually no chair motion in an

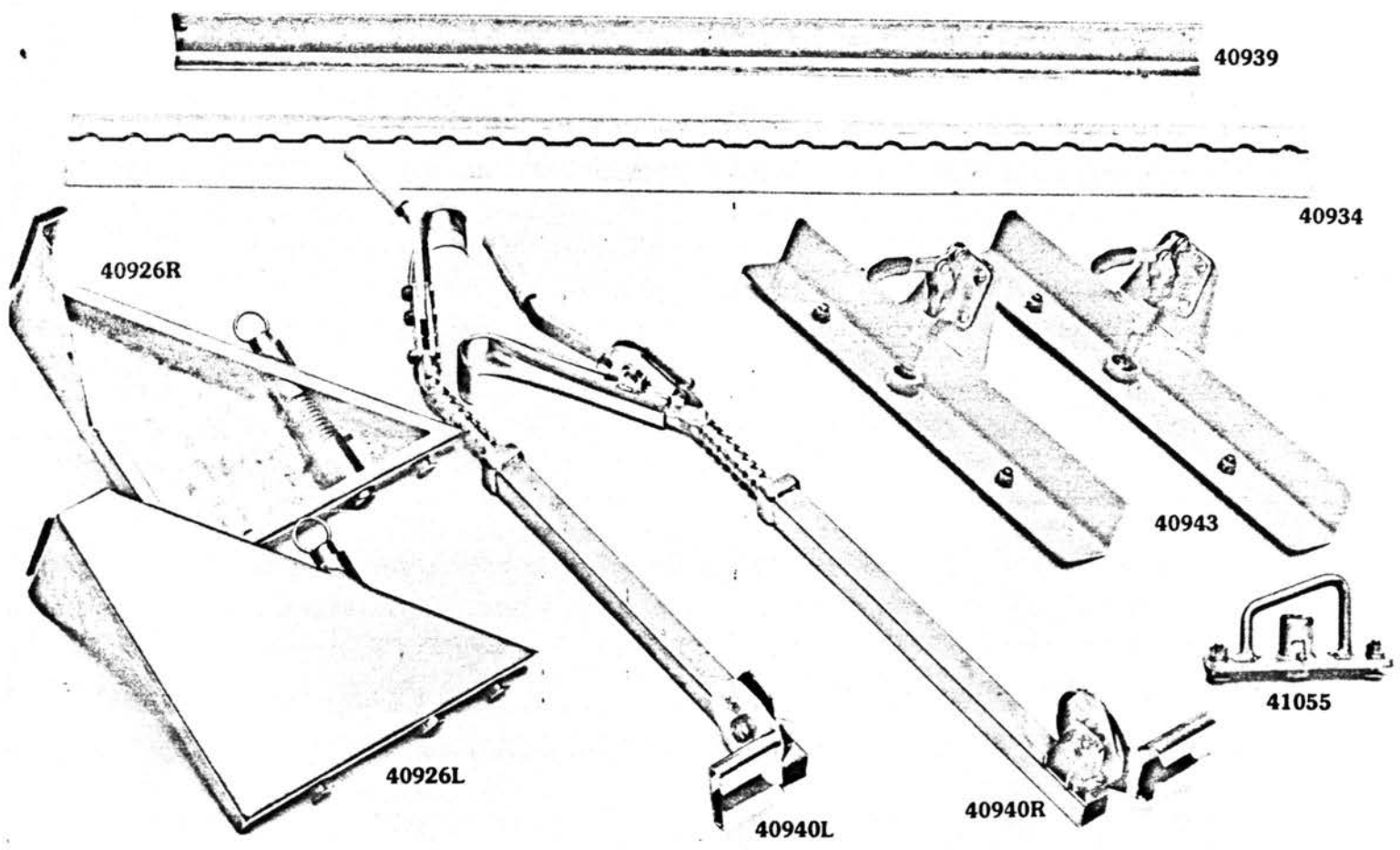

U.S. PATENTS 4,093,303 4,114,947

Framelock™ WHEELCHAIR Holder

PARTS LIST

The following is the parts list for the Framelock™ Wheelchair Holder. The total system can be ordered and would include all of the parts listed below. Individual parts can also be ordered. In any case please be sure to order by part number.

1 Wheelchair securement device - Part Number: **40940**
Consists of:
1 - right arm assembly - Part Number: **40940R**
1 - left arm assembly - Part Number: **40940L**

1 Slide securement device
Part Number: **40939**
36" length only

1 Floor track
Part Number: **40934**
42" Length only.

1 set of forward or rearward facing panels
Part Number: **40926**
Consists of:
1 - right panel assembly - Part Number: **40926R**
1 - left panel assembly - Part Number: **40926L**

1 Set Seat Lock Assemblies - Part Number: **40943**

1 Seat belt holder - Part Number: **41055**

MANUFACTURED BY:
CHAS. OLSON & SONS
and
WHEEL SERVICE CO., INC.
677 TRANSFER ROAD • ST. PAUL, MN 55114
PHONE 612/641-3900

DISTRIBUTED BY:

Rules As Proposed by Representatives of Minnesota School Bus Industry

Rationale For Rules Modification Addition and/or Deletion.

Chapter 21: Standards for Wheelchair Securement Devices

11 MCAR 1.0188 Purpose and authority.

A. Purpose. The purpose of these rules is to establish minimum standards for approval of wheelchair securement devices in vehicles and approval of ~~seat-belt~~ restraint assemblies and anchorages used to protect persons in wheelchairs while transported in vehicles.

The bus operator must have the flexibility needed to properly secure the passenger. To limit the language to seat belts may restrict the use of other devices which may better suit the needs of the individual being transported. The intent of the law does not appear to require only seat belts. The basic intent of the law is to provide safe transportation of handicapped persons.

B. Authority. These rules are promulgated pursuant to the authority granted by Laws of 1978, ch. 752.

11 MCAR 1.0189 Definitions. For the purpose of these rules, the following terms shall have the meanings ascribed to them:

A. Anchorage. The provision for transferring wheelchair securement loads to the vehicle structure.

B. Commissioner. The Commissioner of Public Safety or his duly authorized agent.

C. Interior paneling. Material used to finish the interior of a vehicle, not including the floor, or seat frame rail.

This language insertion would allow greater flexibility in selecting a restraint that fits the needs of the handicapped person, and the attachment of the restraint to the vehicle in a secure place.

D. Wheelchair securement device or securement device. An apparatus installed in a motor vehicle for the purpose of securing an occupied wheelchair into a **location** in the vehicle.

11 MCAR 1.0190 Wheelchair securement.

A. An occupied wheelchair transported in a vehicle shall be secured with a securement device of sufficient strength to prevent forward, backward, lateral or vertical movement of the wheelchair when the device is engaged and the vehicle is in motion, accelerating or braking.

B. Each wheelchair securement device shall attach to the frame of the wheelchair without damaging the frame.

~~C.--A wheelchair securement device shall not be attached to a wheel of a wheelchair.~~

11 MCAR 1.0191 Minimum standards. Each wheelchair securement device shall:

A. Attach to the wheelchair frame ~~on at least three (3) points.--The three (3) points of contact shall be spaced~~ to provide effective securement.

1. Webbing type devices shall meet or exceed the requirements for type 2 seat belt assemblies or contained in section 4.2 of FMVSS209.

2. All metal securement devices shall be of a design and construction which provides wheelchair securement strength at least equal to type 2 seat belt assemblies.

~~B. Consist of at least two (2) webbing type belts described in clause (1) or at least two (2) all metal devices described in clause (2) or one or more of each such device.~~

~~1. Webbing type devices shall be assemblies that meet or exceed Type 2 pelvic restraint seat belt requirements as specified in federal regulations or be certified by the manufacturer that such device meets or exceeds assembly strength of 5,000 pounds in loop fashion or 2,500 pounds on each anchorage leg.~~

B. a. Certification may be the specification listed in catalogs or publications by the manufacturer.

b. All new construction of such securement devices and repair to webbing securement device shall conform with standards established by the manufacturer. ~~of the webbing.~~

~~2.--All metal securement devices shall be of a design and construction which provides wheelchair securement strength at least equal to the strength of a webbing type device comprised of three separate attachments and anchorages.~~

Rationale For [illegible]les Modification Addition and/or Deletion.

A letter dated April 3, 1979 to Major Richard Lueck from Marshall R. Whitlock questions the definition of damage.

There is nothing in the law that prohibits the use of the wheels to secure the wheelchair. The law just provides that securement devices also attach to the frame.

If the securement device regardless of the number of points of contact effectively secures the wheelchair from movement more than one inch, then it should be approved.

Supports comments made by Marshall Whitlock in his April 3, 1979 letter to Major Lueck.

Rationale For Rules Modification
Addition and/or Deletion

C. Be free of sharp edges, corners and jagged projections to minimize injury to persons in the event of unintentional contact.

D. Be capable of retraction, and be readily removable or otherwise suitably storeable when not in use.

E. Be anchored to the vehicle at not less than two separate points with bolts, nuts and lock washers or self-locking nuts.

1. Bolts used shall be not less than 3/8 inch in diameter and of National Fine Thread SAE grade 5 designation or equivalent.

2. Where anchorage bolts do not pierce the vehicle frame, subframe, body-post or equivalent metal structure, a metal reinforcement plate or washer not less than 1/16 inches thick by 2½ inches in diameter is required.

3. In no event shall interior paneling constitute anchorage for a point of securement.

4. A metal track, rail or similar device permitting attachment of the securement device at optional points thereon may be used to anchor the securement device, provided:

a. The track, rail or other device is secured to the vehicle in compliance with anchorage requirements of this rule.

b. The attachment of the securement device to the anchor point is by means of a positive attachment metal fitting.

II MCAR 1.0192 Approval procedure,

A. Application for approval of a wheelchair securement device shall be made to the commissioner ~~and shall be accompanied~~ by the manufacturer. Actual or proposed written installation instructions and photographs or drawings clearly depicting the construction of the device and its physical characteristics, including all mounting hardware shall accompany such application.

The burden of certifying the device should be on the person who produces it.

B. The applicant shall furnish a vehicle with the securement device installed therein and demonstrate the device by attaching it to a wheelchair furnished by the applicant. ~~The wheelchair shall not be modified to accommodate the secure device.~~ The commissioner may load the wheelchair to 140 pounds and require the vehicle be accelerated, driven around corners and subjected to hard braking at speeds of thirty miles per hour or less. Movement of the wheelchair more than one(1) inch in any direction, including: vertically, during such test shall be grounds for refusal of approval. Measurement of movement shall be at the points where wheelchair wheels contact the floor. Damage to the wheelchair or any other property during such test shall be the responsibility of the applicant.

C. Upon determining that the securement device meets the requirements of these rules, the commissioner shall issue a certificate of approval authorizing use of the device. ~~The approval shall expire five years from the date of issuance.~~ A securement device installed in a vehicle ~~during the life of the approval~~ may be used throughout its useful life in any vehicle.

D. The commissioner may revoke any approval granted hereunder upon a showing that the securement device does not meet a requirement of these rules.

E. Each wheelchair securement device shall be permanently labeled with the name, initials, or trademark of the manufacturer and the model designation of the device. The label shall be readily visible and legible from the outside of the device when it is properly mounted to the vehicle and in use.

11 MCAR 1.0193 ~~Seat belts.~~ Occupant Restraint

~~A. Each vehicle equipped with a wheelchair securement device installed after October 1, 1979, shall be equipped with a type 2 seat belt assembly with a detachable upper torso portion at each such wheelchair position in the vehicle. The seat belt assembly, the upper torso restraint and anchorages for both shall meet the requirements of applicable Federal Motor Vehicle Safety Standards.~~

Rationale for Rules Modification Addition and/or Deletion

If a securement device requires a modification to a wheelchair, the modification should be approved. (Refer to May 11, 1979, letter of Jan Vanderwall.)

We support Marshall Whitlock's statement that language is not clear and should be redrafted.

Once approved a device is subject to reinspection. Why require reapproval?

Add F.
Wheelchair securement devices specially designed and manufactured to transport a handicapped person shall not be subject to approval or the other provisions of these rules, except the provision relating to occupant restraints. Some handicapped persons provide their own devices due to the unique qualities of their wheelchairs.

A. A handicapped person transported in a wheelchair, shall be restrained in the wheelchair by a restraining device sufficient to hold the handicapped person in the wheelchair.

~~B.--Each-vehicle-equipped-with-a-securement-device-installed-prior-to-October-1,-1979,-shall-be-equipped-with-a-type-1-or-type-2-seat-belt-assembly-at-each-such-wheelchair-position-in-the-vehicle.--The-seat-belt-assembly,-and-the-upper-torso-restraint-if-so-equipped,-and-their-respective-anchorages-shall-meet-the-requirements-of-applicable-Federal-Motor-Vehicle-Standards.~~

II MCAR 1.0194 Securement. It shall be the responsibility of the driver of any vehicle equipped with a wheelchair securement device to:

A. Properly secure an occupied wheelchair prior to moving the vehicle unless the wheelchair occupant is capable of securing the device and does so.

B. Fasten the ~~seat-belt~~ restraint assembly, ~~and-upper-torso-restraint-if-so-equipped,~~ around the occupant of the wheelchair unless the occupant is capable of fastening same and does so. The driver shall not fasten the assembly if doing so would aggravate a physical condition of the occupant.

C. Retract, remove or otherwise store securement devices and ~~seat-belt~~ restraint assemblies when not in use to prevent tripping of persons and damage to devices.

II MCAR 1.0195 Inspection. The commissioner may order the removal or corrective action upon determining that any wheelchair securement device without regard to date of installation:

A. Is not capable of sustaining loads imposed thereon in restraining an occupied wheelchair, or

B. The securement device permits excessive movement of an occupied wheelchair.

Rationale For Rules Modification Addition and/or Deletion.

This language insertion would allow greater flexibility in selecting a restraint that fits the needs of the handicapped person.

An upper torso restraint recently caused strangulation of a handicapped student following a seizure on a school bus in Columbus, Ohio.

The intent of the law does not mandate use of equipment which may be harmful to the handicapped person transported.

II MCAR 1.0196 Effective dates. These rules apply to all securement devices installed in a vehicle after October 1, ~~1979,~~ 1980. ~~and to any securement device used in any vehicle after December 31, 1980.~~ After July 1, 1979, no person shall be transported in a wheelchair without the use of a wheelchair securement device, **and restraint device.**

Rationale For Rules Modification
Addition and/or Deletion

The basic intent of the law is to require use of a securement device and restraint.

The law does not mandate the retrofitting of existing equipment.

A fifteen month period to comply is reasonable for new equipment. During that time, needs can be determined, equipment can be secured, installed and approval obtained.

No person should be transported without some kind of wheelchair securement device and restraint, if transported in a wheelchair.

KEY: RULES SECTION - Underlining indicates additions to proposed rule language. ~~Strike outs~~ indicate deletions from proposed rule language.

(6)

May 17, 1979

Peter Erickson
Office Of Hearing Examiners
1745 University Avenue
St. Paul, MN 55104

Dear Mr. ERickson:

Representatives of the Minnesota School Bus Industry met on May 8, 1979, to discuss the proposed rules governing minimum standards for wheelchair securement devices. On behalf of those representatives I want to thank personnel of the office of Hearing Examiners for the opportunity to address you today.

We are concerned about the safety of persons who are transported in wheelchairs. In addition, we believe that the proposed regulations must be carefully studied and evaluated by persons who are currently providing transportation to handicapped individuals thoughout the State of Minnesota. The transportation of school age persons who are handicapped requires maximum flexibility in equipping vehicles with securement devices. Buses which are outfitted with wheelchair securement devices to provide transportation to and from school must often be modified the same day. Such modifications are necessary when students (transported on other buses AM and PM) in wheelchairs are transported for field trips between their AM and PM trips. Major emphasis must be placed on keeping transportation available for all handicapped persons. We are concerned that restrictive regulations which limit needed flexibility may result in reducing rather than expanding opportunities for transportation of the handicapped of all ages.

The basic intent of the law which requires the proposed regulations is to provide for safe wheelchair securement devices. No one has addressed the definition of a wheelchair which is defined in the dictionary as a chair mounted on large wheels for the use of the sick or disabled. Industry representatives have daily contact with students who must be transported in wheelchairs that exist in a multitude of designs bearing little resemblence to the dictionary definition. It should be noted that there are probably some securement devices that cannot attach to anything but the wheels.

We also believe that the regulations as presently drafted would sanction the transportation of persons in wheelchairs without any securement devices. For that reason we have proposed language which would prevent that from happening.

The following materials are provided for your review:

1. Rules as proposed by representatives of the Minnesota School Bus Industry.
2. April 3, 1979, memorandum from Marshall R. Whitlock to Major Richard Lueck.
3. Excerpts from a presentation by Mr. Robert Donley of Weldon, Inc., Columbus, Ohio to the MAPT Spring Workshop, at Albert Lea, Minnesota on April 27, 1979.
4. May 2, 1979, memorandum to Doyle Tomhave, President, Minnesota Association for Pupil Transportation from Gary Hayden, SERC East Metro.

(over)

5. May 4, 1979, letter to Mr. Roger Whitcomb from Betty Christenson.
6. May 11, 1979, letter to Raymond Kroll from Jan Vanderwall.
7. List of School Bus Industry Representatives.

A series of slides have been prepared for presentation at the hearing today and with your permission other industry representatives will assist me with that presentation.

Should personnel from the office of the Hearing Examiner, the Minnesota State Patrol, or the Minnesota Department of Public Safety require assistance with the revision of the proposed regulations, I want you to know that the industry persons I represent are ready to assist you. For future contacts, you may reach me at 348-5650.

Sincerely,

Raymond F. Kroll
Minnesota School Bus
Industry Spokesperson

RFK/dh
cc: Industry Representatives

Excerpts from a presentation by Mr. Robert Donley of Weldon, Inc., Columbus, Ohio to the MAPT Spring Convention and Workshop, Albert Lea, Minn., April 27, 1979:

Ed. note: Mr. Donley has visited 17 special education programs in the transportation of handicapped and multiple handicapped students, involving some 6,000 buses and 18,000 school children. His expertise in this field is unquestioned.

"While we have been transporting pupils for 50 years, handicapped transportation can be indicated as being only done for one minute. We are dealing with a multiplicity of wheel chair devices, - not just standard wheel chairs. Much of equipment being used as devices is inadequate. The one thing that is apparent is the continual change (of the handicapped student and, hence provision for transporting) going on throughout the year."

Specifications Glare-free glass in windows in recommended for buses transporting handicapped students. This reduces of eliminates light rays and reflections from startling a child and reduces heat build-up in a bus. An aisle down the middle of the bus is the best and any platform lift should be placed midway on right side of the bus. Provide a couple of logitudinal and lateral seats. Longitudinal seats should not be placed over a wheel well. (There is a) need for a seat that a child can be laid-out on. Be sure the fork clears the handrail. (1) A chain locking mechanism and bar slide are 'infinitely variable' and have 3-point retention. (2) A stanchion type, ie Collins brand is ok for forward-facing regular chairs. (3) A webbing strap and bar (infinitely variable) is workable but difficult to get to (lock/unlock). (4) A pin-chain on bar (infinitely variable) is being used and is workable, but again, difficult to get at.

Basically, some of the problems in holding a wheelchair down are (that) some hold-downs can permit the wheelchair to pivot backward on the axle to put the handles through the (bus) windows. A single point hold-down is totally inadequate. A two-point hold-down is preferred to hold the front of the wheelchair down to the floor. There is no way via a lap belt or shoulder harness to keep a child retained(in a wheelchair) in an accident. Orthokinetic chairs should be placed over wheel wells, with the back of the chair held to the floor from the rear. These chairs only belong on a seat - not the floor. A velcro strap is not a positive retention (buckle device) and should be out-lawed. Some wheelchair restraining devices are not infinitely variable. They must be infinitely variable.

Loading and Unloading
Curved loading and unloading areas are stupid, as well as cul de sac areas in residential areas. All multiple-handicapped students are not in (transported) in wheelchairs - have driver or aide with each child in going up or down steps. Never lift or lower a (lift) platform without an attendent outside on the ground. In an emergency evacuation (of the bus), leave the (wheel)chair - get the child off- forget finding the buckle release- cut the webbing. (In loading) keep seat belt buckles behind the seat back. Wheelchairs must be secured down so as not to move more than one-inch in any direction."

Mr. Donley made the following statements regarding the writing of mandatory rules regarding wheelchair retention: "Prove what you have written will work-or - instead of making changes, mandatory, let's abate debate and place changes in a series of buses to see if they will work."

Special Education Regional Consultant
Region 11 - West
6800 Cedar Lake Road
St. Louis Park, Minnesota 55426

Betty M. Christenson

ANOKA-HENNEPIN
BELLE PLAINE
BLOOMINGTON
BROOKLYN CENTER
BURNSVILLE
CHASKA
EDEN PRAIRIE
EDINA
GOLDEN VALLEY
HOPKINS
JORDAN
MINNEAPOLIS
MINNETONKA
MONTGOMERY
MOUND
NEW PRAGUE
NORWOOD
ORONO
OSSEO
PRIOR LAKE
RICHFIELD
ROBBINSDALE
ST. FRANCIS
ST. LOUIS PARK
SHAKOPEE
WACONIA
WATERTOWN
WAYZATA
I.S.D. #287

May 4, 1979

Mr. Roger Whitcomb
Director of Special Services
South Washington County
Cottage Grove, Minnesota 55016

Dear Roger,

At our West Metro Directors Council meeting today, the Directors passed a motion to support the resolution delaying the hearings on the transportation standards for wheelchair securement devices.

The group agreed that more time is needed to study the proposed rules.

Please pass on to Mr. Tomhave the support of our West Metro Special Education Directors for your resolution.

Sincerely,

Betty

Betty Christenson

BC/mb

SPECIAL EDUCATION REGIONAL CONSULTANT

9875 Inver Grove Trail
Inver Grove Heights, Minnesota 55075
Phone (612) 455-9145

J. Gary Hayden, PhD

May 2, 1979

EMSEC
MEMBER SCHOOL
DISTRICTS:

Centennial

Columbia Heights

Farmington

Forest Lake

Fridley

Hastings

Inver Grove-
Pine Bend

Lakeville

Mahtomedi

Mounds View

North St. Paul-
Maplewood

Rosemount

Roseville

South St. Paul

South Washington County

Spring Lake Park

Stillwater

St. Anthony

St. Paul

West St. Paul

White Bear Lake

916 Voc-Tech Institute

917 Voc-Tech Institute

TO: Doyle Tomhave
President, Minnesota Association for Pupil Transportation

FROM: Gary Hayden
SERC, East Metro

RE: Resolution on Minimum Standards for Wheelchair Securement Devices

The East Metropolitan Special Education Council, at its May 1, 1979 meeting, passed the enclosed resolution. The resolution pertains to proposed rules relating to security devices for wheelchairs in vehicles. The group felt that more study needs to be given the proposed rules before rules on the subject are adopted.

The EMSEC Directors of Special Education do feel that appropriate rules for the transportation of handicapped students are important. Rules relating to securing wheelchairs during travel are needed, but it is important that the rules be functional and protect the student. We feel more study of the proposed rules would be in the best interest of the students.

RESOLUTION RELATING TO PROPOSED RULES GOVERNING

MINIMUM STANDARDS FOR WHEELCHAIR SECUREMENT DEVICES

WHEREAS, the Minnesota Department of Public Safety, Safety Administration Division proposes to adopt rules governing minimum standards for wheelchair securement devices pursuant to Laws of 1978, Chapter 752 and

WHEREAS, the Commissioner proposes to adopt rules relating to strength, positioning, attachment and design of devices used to secure wheelchairs in vehicles during transport of persons in wheelchairs and standards for seat belts to be used by such persons, and

WHEREAS, the language of the proposed rules provide more of the securement of apparatus than the primary safety of occupants, and

WHEREAS, the language of the proposed rules in some instances call for certain attachments or methods of attachment that are currently unavailable or impossible to install with specific reference to 1.0190-B and 1.0192-B, now

THEREFORE, BE IT RESOLVED that the proposed rules be placed in abatement pending further study and language recommendation from appropriate individuals and agencies representing the medical, transportation, supplier, and client interests.

SCHOOL BUS PUPIL TRANSPORTATION
INDUSTRY REPRESENTATIVES

NAME	REPRESENTING
Tom Bouthlet	Columbia Transit
Jim Olson	Columbia Transit
Allen Rabun	St. Paul Public Schools
Doyle Tomhave	South Washington County Schools
Ernie Ballas	St. Paul Public Schools
Jan Vanderwall	Roseville School District
Bruce Swanson	Hopkins School District
Bob Fischer	State Department of Education
Roger Blohm	Minnesota Body & Equipment
Arnie Swanson	West St. Paul School District #197
Tom Spellman	Northstar Body & Equipment Company
Robert R. Carlson	Charles Olson & Sons
Al Nelsen	Charles Olson & Sons
Ron Pingree	Hunts Bus Company
Charles J. Hey	Hey Bus Company, Inc.
Joe Beaton	MSBOA
Ray Kroll	Minneapolis Public Schools

RFK/dh
5/16/79

Roseville Area Schools
Arden Hills, Falcon Heights, Lauderdale, Little Canada, Maplewood, Roseville, Shoreview
District 623

SCHOOL BOARD
Charles L. Brandt, *Chair*
Carole Kronenberg, *Clerk*
Suzanne K. Welsch, *Treasurer*
Joanne Cushman, *Director*
Walter Parsons, Jr., *Director*
David E. Monson, *Director*

J. RAYMOND KING
Administrator of Bldgs., Grds., Transportation

DR. LLOYD C. NIELSEN
Superintendent

May 11, 1979 (7)

Mr. Raymond Kroll
Transportation Director
1001 2nd Avenue North
Minneapolis, Minnesota 55405

Dear Mr. Kroll:

I am writing to express my concerns over the proposed Rules Governing Minimum Standards for Wheelchair Securement Devices. I have a primary objection to this type of regulation due to its limiting nature. By specifying only two types of equipment and one method of securement, the available options toward solution of the problem-namely safe transportation of people in wheelchairs,are limited. Who is able to say that there are no other options which would be safer and possibly cheaper or more convenient? To this end I would propose that the equipment portions of the Standard be revised into an advisory format, and that the standards in general be revised to reflect performance rather than equipment.

I believe the possibility of adoption of the above proposal is slim so I will also comment on individual areas of the proposed standard as they relate to school buses and school children.

11 MCAR 1.010- Wheel Chair Securement.
B & C. These portions of the proposal would eliminate the most of the school bus wheelchair securement devices in use today. Despite the fact that their performance is as good as frame devices and despite the inconvenience of retrofitting present buses. I understand that the objective here is to eliminate damage to the wheels by the securement devices. It <u>is</u> possible to secure a wheelchair by its wheels and frame and not damage them. I would suggest a replacement phrase "B - The wheelchair securement device shall attach to a secure part of the wheelchair without causing damage to the wheelchair under normal use and driving procedures."

11 MCAR 1.0191 Minimum Standards.
A. Delete reference to frame. Reasons as commented above in 1.0190.

11 MCAR 1.0192 Approval Procedure.
B. The requirement that a wheelchair "not be modified to accommodate the securement device" again takes away from the district or contractor an option which could mean the difference between safe and unsafe transportation. Some students require very specialized support in order

to be moved from one area to another. This often results in custom hardware manufactured to meet the needs of the individual student.

A recent instance in District 623 where a student came into a foster home on a temporary basis shows the problem. Although the stay was to be only for a very short period of time, transportation was immediately requested to start as soon as possible. The student was kept in a device somewhat like a body support brace with long legs and small wheels. Since this custom unit would not fit any standard securement device, a system of counter pulling webbing was designed and installed to hold the device in place. The chair was top heavy and even with 3 belts would move around. Two eyebolts attached to the frame of the device and attached to the floor and wall could have completely stabalized the device. Other more specialized equipment could require even greater modification in order to provide a safe ride to/from school. For this reason I would hope that the modification sentence be deleted from the approval sequence or that specialized custom devices be either exempted from the approval sequence or dealt with on an individual basis in a separate procedure.

11MCAR 1.0193 Seat Belts.
This paragraph seems to indicate that seat belts for the individual in a wheelchair will be attached to the body of the vehicle. If this is so, then the paragraph should be modified to indicate the need to keep the rider in the wheelchair safely, and assume that the wheelchair securement device will hold the chair in place.

This brings up the other link in this safety system - the wheelchair itself. In this standard and to the best of my understanding, there is no standard for the construction of wheelchair devices. It is senseless to design a safety system to conform to certain strength levels and exempt one component of that system closest to the student rider from any requirements. In an accident situation it is certain to be the component which will fail, resulting in injury to the rider. I would suggest that standards be set for wheelchairs being transported, and that these standards include provisions for attachments to hold down devices, i.e. eyebolts, beltslots, and/or bolt tabs. While these standards are being developed, a temporary or partial standard should be promulgated, but final decisions on wheelchair securement device standards should be delayed until aoption of the wheelchair standard.

Sincerely,

Jan P. Vanderwall

Jan P. Vanderwall
Transportation Supervisor

cc: Joe Beaton
Bob Fischer
Doyle Tomhave
Chuck Hey

dp

MINNESOTA BODY & EQUIPMENT CO.
Telephone: (612) 445-8300
7380 Highway 101 • Shakopee, Minnesota 55379 • 1 Mile East of Valleyfair

(8)

RECEIVED
MAY 2 5 1979
OFFICE OF HEARING EXAMINERS

5/22/79

Peter Erickson
Office of Hearing Examiners
Room 300
1745 University Ave.
St. Paul, MN 55104

RE: Standard for Wheelchair Securement Devices

Dear Mr. Erickson:

Our firm polled the customers we have presently using the Wayne wheelchair securement device. The results of the said poll is enclosed. Please, note all were satisfied plus there was no damage complaints by users.

It is our belief since most of our customers work on low operating budgets to transport handicapped that the proposal should "grandfather" the present installations. This would assure continued handicapped transportation.

In order to assure the proper spending of monies for wheelcahir mounts it would be our suggestion to consider a Pilot Program for testing under actual operating conditions. This testing would allow for a proper evaluation prior to the spending of monies.

We realize the need for safety, but also, feel a drastic change could do more harm than good.

Sincerely,

Roger Blohm

Roger Blohm

MINNESOTA BODY & EQUIPMENT CO.
Telephone: (612) 445-8300
7380 Highway 101 • Shakopee, Minnesota 55379 • 1 Mile East of Valleyfair

To All Owners of Wayne Special Care Buses 1/9/79

Ladies and Gentlemen:

The legislature passed a bill requiring frame mount wheelchair tie downs on all buses and vans used in Minnesota. At this time there is no state approved frame mount tie down available. The ones we have looked at are high priced and most are hard for the drivers or attendants to hook up. We will be attending a hearing very soon trying to make amendments to this bill. One would be the continued use of the tire mount wheelchair tie down you are now using. We ask that you fill in this questionare and return it as soon as possible so your views can be heard.

1. Have you had damage to wheelchairs due to the use of a tire mount holddown?

Yes _____ No ✓

2. Is the tire mount easy for the attendant to use?

Yes ✓ No _____

3. Are you satisfied with the tire mount wheelchair holddown you are now using?

Yes ✓ No _____

4. Do you want to change over to frame mount holddowns on all your units?

Yes _____ No ✓

Company Name THE PHOENIX RESIDENCE, INC.

Address 135 COLORADO ST. E.

City ST. PAUL State MN Zip Code 55107

Name and Position JUDITH S. WITHERSPOON, EXECUTIVE DIRECTOR

MINNESOTA BODY & EQUIPMENT CO.
Telephone: (612) 445-8300
7380 Highway 101 • Shakopee, Minnesota 55379 • 1 Mile East of Valleyfair

JAN 1 19[illegible]
N.E.N.H.
N.E.N.H.

To All Owners of Wayne Special Care Buses 1/9/79

Ladies and Gentlemen:

The legislature passed a bill requiring frame mount wheelchair tie downs on all buses and vans used in Minnesota. At this time there is no state approved frame mount tie down available. The ones we have looked at are high priced and most are hard for the drivers or attendants to hook up. We will be attending a hearing very soon trying to make amendments to this bill. One would be the continued use of the tire mount wheelchair tie down you are now using. We ask that you fill in this questionare and return it as soon as possible so your views can be heard.

1. Have you had damage to wheelchairs due to the use of a tire mount holddown?

Yes _____ No X

2. Is the tire mount easy for the attendant to use?

Yes X No _____

3. Are you satisfied with the tire mount wheelchair holddown you are now using?

Yes X No _____

4. Do you want to change over to frame mount holddowns on all your units?

Yes _____ No X

Company Name EAST SIDE NEIGHBORHOOD SERVICE, INC.

Address 1929 - SECOND ST. N.E.

City MPLS State MN Zip Code 55418

Name and Position CYNDIE MAYER - TRANSPORTATION COORDINATOR

MINNESOTA BODY & EQUIPMENT CO.
Telephone: (612) 445-8300
7380 Highway 101 • Shakopee, Minnesota 55379 • 1 Mile East of Valleyfair

To All Owners of Wayne Special Care Buses 1/9/79

Ladies and Gentlemen:

The legislature passed a bill requiring frame mount wheelchair tie downs on all buses and vans used in Minnesota. At this time there is no state approved frame mount tie down available. The ones we have looked at are high priced and most are hard for the drivers or attendants to hook up. We will be attending a hearing very soon trying to make amendments to this bill. One would be the continued use of the tire mount wheelchair tie down you are now using. We ask that you fill in this questionare and return it as soon as possible so your views can be heard.

1. Have you had damage to wheelchairs due to the use of a tire mount holddown?

Yes _____ No X

2. Is the tire mount easy for the attendant to use?

Yes X No _____

3. Are you satisfied with the tire mount wheelchair holddown you are now using?

Yes X No _____

4. Do you want to change over to frame mount holddowns on all your units?

Yes _____ No X

Company Name PRESBYTERIAN HOMES

Address 3220 LAKE JOHANNA BLVD.

City ST. PAUL State MINN. Zip Code _____

Name and Position EUGENE SCHWARTZ DRIVER

MINNESOTA BODY & EQUIPMENT CO.
Telephone: (612) 445-8300
7380 Highway 101 • Shakopee, Minnesota 55379 • 1 Mile East of Valleyfair

To All Owners of Wayne Special Care Buses 1/9/79

Ladies and Gentlemen:

The legislature passed a bill requiring frame mount wheelchair tie downs on all buses and vans used in Minnesota. At this time there is no state approved frame mount tie down available. The ones we have looked at are high priced and most are hard for the drivers or attendants to hook up. We will be attending a hearing very soon trying to make amendments to this bill. One would be the continued use of the tire mount wheelchair tie down you are now using. We ask that you fill in this questionare and return it as soon as possible so your views can be heard.

1. Have you had damage to wheelchairs due to the use of a tire mount holddown?

Yes _____ No X

2. Is the tire mount easy for the attendant to use?

Yes X No _____

3. Are you satisfied with the tire mount wheelchair holddown you are now using?

Yes X No _____

4. Do you want to change over to frame mount holddowns on all your units?

Yes _____ No X

Company Name Samaritan Bethany, Inc.

Address 24 8th St. NW

City Rochester State MN Zip Code 55901

Name and Position L. E. Bliss - Administrator

MINNESOTA BODY & EQUIPMENT CO.
Telephone: (612) 445-8300
7380 Highway 101 • Shakopee, Minnesota 55379 • 1 Mile East of Valleyfair

To All Owners of Wayne Special Care Buses 1/9/79

Ladies and Gentlemen:

The legislature passed a bill requiring frame mount wheelchair tie downs on all buses and vans used in Minnesota. At this time there is no state approved frame mount tie down available. The ones we have looked at are high priced and most are hard for the drivers or attendants to hook up. We will be attending a hearing very soon trying to make amendments to this bill. One would be the continued use of the tire mount wheelchair tie down you are now using. We ask that you fill in this questionare and return it as soon as possible so your views can be heard.

1. Have you had damage to wheelchairs due to the use of a tire mount holddown?

Yes _____ No X

2. Is the tire mount easy for the attendant to use?

Yes X No _____

3. Are you satisfied with the tire mount wheelchair holddown you are now using?

Yes X No _____

4. Do you want to change over to frame mount holddowns on all your units?

Yes _____ No X

Company Name Riverview Hospital Assn.

Address 333 So. Minnesota

City Crookston State Mn. Zip Code 56716

Name and Position Kristi Peterson, Adult Day-Care Coordinator

MINNESOTA BODY & EQUIPMENT CO.
Telephone: (612) 445-8300
7380 Highway 101 • Shakopee, Minnesota 55379 • 1 Mile East of Valleyfair

To All Owners of Wayne Special Care Buses 1/9/79

Ladies and Gentlemen:

The legislature passed a bill requiring frame mount wheelchair tie downs on all buses and vans used in Minnesota. At this time there is no state approved frame mount tie down available. The ones we have looked at are high priced and most are hard for the drivers or attendants to hook up. We will be attending a hearing very soon trying to make amendments to this bill. One would be the continued use of the tire mount wheelchair tie down you are now using. We ask that you fill in this questionare and return it as soon as possible so your views can be heard.

1. Have you had damage to wheelchairs due to the use of a tire mount holddown?

Yes _____ No ✓

2. Is the tire mount easy for the attendant to use?

Yes ✓ No _____

3. Are you satisfied with the tire mount wheelchair holddown you are now using?

Yes ✓ No _____

4. Do you want to change over to frame mount holddowns on all your units?

Yes _____ No ✓

Company Name DIOCESAN CHILDREN

Address 400 W. MARIE

City W ST PAUL State MINN Zip Code 55118

Name and Position JEANNE TUGGLE - RECREATION DIRECTOR

MINNESOTA BODY & EQUIPMENT CO.

Telephone: (612) 445-8300

7380 Highway 101 • Shakopee, Minnesota 55379 • 1 Mile East of Valleyfair

JAN 1979
RECEIVED
BUSINESS OFFICE
FARIBAULT STATE
HOSPITAL

To All Owners of Wayne Special Care Buses 1/9/79

Ladies and Gentlemen:

The legislature passed a bill requiring frame mount wheelchair tie downs on all buses and vans used in Minnesota. At this time there is no state approved frame mount tie down available. The ones we have looked at are high priced and most are hard for the drivers or attendants to hook up. We will be attending a hearing very soon trying to make amendments to this bill. One would be the continued use of the tire mount wheelchair tie down you are now using. We ask that you fill in this questionare and return it as soon as possible so your views can be heard.

1. Have you had damage to wheelchairs due to the use of a tire mount holddown?

Yes _____ No ✓

2. Is the tire mount easy for the attendant to use?

Yes ✓ No _____

3. Are you satisfied with the tire mount wheelchair holddown you are now using?

Yes ✓ No _____

4. Do you want to change over to frame mount holddowns on all your units?

Yes _____ No ✓

Company Name FARIBAULT STATE HOSPITAL

Address _____

City FARIBAULT State MINN. Zip Code 55021

Name and Position LAVERNE TOSSEMENT GDS. & ROS. SUPERVISOR

MINNESOTA BODY & EQUIPMENT CO.
Telephone: (612) 445-8300
7380 Highway 101 • Shakopee, Minnesota 55379 • 1 Mile East of Valleyfair

To All Owners of Wayne Special Care Buses 1/9/79

Ladies and Gentlemen:

The legislature passed a bill requiring frame mount wheelchair tie downs on all buses and vans used in Minnesota. At this time there is no state approved frame mount tie down available. The ones we have looked at are high priced and most are hard for the drivers or attendants to hook up. We will be attending a hearing very soon trying to make amendments to this bill. One would be the continued use of the tire mount wheelchair tie down you are now using. We ask that you fill in this questionare and return it as soon as possible so your views can be heard.

1. Have you had damage to wheelchairs due to the use of a tire mount holddown?

Yes _____ No X

2. Is the tire mount easy for the attendant to use?

Yes X No _____

3. Are you satisfied with the tire mount wheelchair holddown you are now using?

Yes X No _____

4. Do you want to change over to frame mount holddowns on all your units?

Yes _____ No X

Company Name Trevilla of New Brighton Nursing Home

Address 825 - 1st Ave. N.W.

City New Brighton State Mn. Zip Code 55112

Name and Position Earlene Olds - Administrator

MINNESOTA BODY & EQUIPMENT CO.
Telephone: (612) 445-8300
7380 Highway 101 • Shakopee, Minnesota 55379 • 1 Mile East of Valleyfair

To All Owners of Wayne Special Care Buses 1/9/79

Ladies and Gentlemen:

The legislature passed a bill requiring frame mount wheelchair tie downs on all buses and vans used in Minnesota. At this time there is no state approved frame mount tie down available. The ones we have looked at are high priced and most are hard for the drivers or attendants to hook up. We will be attending a hearing very soon trying to make amendments to this bill. One would be the continued use of the tire mount wheelchair tie down you are now using. We ask that you fill in this questionare and return it as soon as possible so your views can be heard.

1. Have you had damage to wheelchairs due to the use of a tire mount holddown?

Yes _____ No V

2. Is the tire mount easy for the attendant to use?

Yes V No _____

3. Are you satisfied with the tire mount wheelchair holddown you are now using?

Yes V No _____

4. Do you want to change over to frame mount holddowns on all your units?

Yes _____ No V

Company Name Aitkin County Committee on Aging

Address 421 4 Ave N W

City Aitkin State Minn Zip Code 56431

Name and Position Walter Staffeack President

MINNESOTA BODY & EQUIPMENT CO.
Telephone: (612) 445-8300
7380 Highway 101 • Shakopee, Minnesota 55379 • 1 Mile East of Valleyfair

RECEIVED
JAN 18 1979
G. A. F.

To All Owners of Wayne Special Care Buses 1/9/79

Ladies and Gentlemen:

The legislature passed a bill requiring frame mount wheelchair tie downs on all buses and vans used in Minnesota. At this time there is no state approved frame mount tie down available. The ones we have looked at are high priced and most are hard for the drivers or attendants to hook up. We will be attending a hearing very soon trying to make amendments to this bill. One would be the continued use of the tire mount wheelchair tie down you are now using. We ask that you fill in this questionare and return it as soon as possible so your views can be heard.

1. Have you had damage to wheelchairs due to the use of a tire mount holddown?

Yes _____ No X

2. Is the tire mount easy for the attendant to use?

Yes X No _____

This type fits standard size wheelchairs only.

3. Are you satisfied with the tire mount wheelchair holddown you are now using?

Yes X No _____

4. Do you want to change over to frame mount holddowns on all your units?

Yes _____ No X

Company Name Guardian Angels Foundation, Inc.
Elk River Nursing Home
Address 400 Evans Ave.

City Elk River State MN Zip Code 55330

Name and Position Carol J. Mills, Administrator Carol J. Mills

MINNESOTA BODY & EQUIPMENT CO.
Telephone: (612) 445-8300
7380 Highway 101 • Shakopee, Minnesota 55379 • 1 Mile East of Valleyfair

To All Owners of Wayne Special Care Buses 1/9/79

Ladies and Gentlemen:

The legislature passed a bill requiring frame mount wheelchair tie downs on all buses and vans used in Minnesota. At this time there is no state approved frame mount tie down available. The ones we have looked at are high priced and most are hard for the drivers or attendants to hook up. We will be attending a hearing very soon trying to make amendments to this bill. One would be the continued use of the tire mount wheelchair tie down you are now using. We ask that you fill in this questionare and return it as soon as possible so your views can be heard.

1. Have you had damage to wheelchairs due to the use of a tire mount holddown?

Yes _____ No ✓

2. Is the tire mount easy for the attendant to use?

Yes ✓ No _____

3. Are you satisfied with the tire mount wheelchair holddown you are now using?

Yes ✓ No _____

4. Do you want to change over to frame mount holddowns on all your units?

Yes _____ No ✓

Company Name Sogge Memorial Good Samaritan Center

Address Fuller Dr.

City Windom State Minn Zip Code 56101

Name and Position David D. Hornbooskey, Administrator

MINNESOTA BODY & EQUIPMENT CO.
Telephone: (612) 445-8300
7380 Highway 101 • Shakopee, Minnesota 55379 • 1 Mile East of Valleyfair

To All Owners of Wayne Special Care Buses 1/9/79

Ladies and Gentlemen:

The legislature passed a bill requiring frame mount wheelchair tie downs on all buses and vans used in Minnesota. At this time there is no state approved frame mount tie down available. The ones we have looked at are high priced and most are hard for the drivers or attendants to hook up. We will be attending a hearing very soon trying to make amendments to this bill. One would be the continued use of the tire mount wheelchair tie down you are now using. We ask that you fill in this questionare and return it as soon as possible so your views can be heard.

1. Have you had damage to wheelchairs due to the use of a tire mount holddown?

Yes _____ No X

2. Is the tire mount easy for the attendant to use?

Yes X No _____

3. Are you satisfied with the tire mount wheelchair holddown you are now using?

Yes X No _____

4. Do you want to change over to frame mount holddowns on all your units?

Yes _____ No X

Company Name City of Hastings

Address 100 Sibley St.

City Hastings State Mn. Zip Code 55033

Name and Position Dianne Latuff, Transit Coordinator

MINNESOTA BODY & EQUIPMENT CO.
Telephone: (612) 445-8300
7380 Highway 101 • Shakopee, Minnesota 55379 • 1 Mile East of Valleyfair

To All Owners of Wayne Special Care Buses 1/9/79

Ladies and Gentlemen:

The legislature passed a bill requiring frame mount wheelchair tie downs on all buses and vans used in Minnesota. At this time there is no state approved frame mount tie down available. The ones we have looked at are high priced and most are hard for the drivers or attendants to hook up. We will be attending a hearing very soon trying to make amendments to this bill. One would be the continued use of the tire mount wheelchair tie down you are now using. We ask that you fill in this questionare and return it as soon as possible so your views can be heard.

1. Have you had damage to wheelchairs due to the use of a tire mount holddown?

Yes _____ No X

2. Is the tire mount easy for the attendant to use?

Yes X No _____

3. Are you satisfied with the tire mount wheelchair holddown you are now using?

Yes X No _____

4. Do you want to change over to frame mount holddowns on all your units?

Yes _____ No X

Company Name City of Red Wing - Transit Service

Address North Pyler Rd

City Red Wing State Minn Zip Code 55066

Name and Position Deane A. Massett - Director of Public Works

MINNESOTA BODY & EQUIPMENT CO.
Telephone: (612) 445-8300
7380 Highway 101 • Shakopee, Minnesota 55379 • 1 Mile East of Valleyfair

To All Owners of Wayne Special Care Buses 1/9/79

Ladies and Gentlemen:

The legislature passed a bill requiring frame mount wheelchair tie downs on all buses and vans used in Minnesota. At this time there is no state approved frame mount tie down available. The ones we have looked at are high priced and most are hard for the drivers or attendants to hook up. We will be attending a hearing very soon trying to make amendments to this bill. One would be the continued use of the tire mount wheelchair tie down you are now using. We ask that you fill in this questionare and return it as soon as possible so your views can be heard.

1. Have you had damage to wheelchairs due to the use of a tire mount holddown?

Yes _____ No X

2. Is the tire mount easy for the attendant to use?

Yes X No _____

3. Are you satisfied with the tire mount wheelchair holddown you are now using?

Yes X No _____

4. Do you want to change over to frame mount holddowns on all your units?

Yes _____ No X

Company Name Le Sueur Paratransit

Address 203 2nd Street

City Le Sueur State MN Zip Code 56058

Name and Position Kristine Mullaney
Paratransit Coordinator

MINNESOTA BODY & EQUIPMENT CO.
Telephone: (612) 445-8300
7380 Highway 101 • Shakopee, Minnesota 55379 • 1 Mile East of Valleyfair

To All Owners of Wayne Special Care Buses 1/9/79

Ladies and Gentlemen:

The legislature passed a bill requiring frame mount wheelchair tie downs on all buses and vans used in Minnesota. At this time there is no state approved frame mount tie down available. The ones we have looked at are high priced and most are hard for the drivers or attendants to hook up. We will be attending a hearing very soon trying to make amendments to this bill. One would be the continued use of the tire mount wheelchair tie down you are now using. We ask that you fill in this questionare and return it as soon as possible so your views can be heard.

1. Have you had damage to wheelchairs due to the use of a tire mount holddown?

Yes _____ No X

2. Is the tire mount easy for the attendant to use?

Yes X No _____

3. Are you satisfied with the tire mount wheelchair holddown you are now using?

Yes X No _____

4. Do you want to change over to frame mount holddowns on all your units?

Yes _____ No X

Company Name St. Anne Hospice

Address 134 W. Broadway

City Winona State Minn. Zip Code 55987

Name and Position William J. Multhaup Chief Engineer

MINNESOTA BODY & EQUIPMENT CO.
Telephone: (612) 445-8300
7380 Highway 101 • Shakopee, Minnesota 55379 • 1 Mile East of Valleyfair

To All Owners of Wayne Special Care Buses 1/9/79

Ladies and Gentlemen:

The legislature passed a bill requiring frame mount wheelchair tie downs on all buses and vans used in Minnesota. At this time there is no state approved frame mount tie down available. The ones we have looked at are high priced and most are hard for the drivers or attendants to hook up. We will be attending a hearing very soon trying to make amendments to this bill. One would be the continued use of the tire mount wheelchair tie down you are now using. We ask that you fill in this questionare and return it as soon as possible so your views can be heard.

1. Have you had damage to wheelchairs due to the use of a tire mount holddown?

Yes _____ No X

2. Is the tire mount easy for the attendant to use?

Yes X No _____

3. Are you satisfied with the tire mount wheelchair holddown you are now using?

Yes X No _____

4. Do you want to change over to frame mount holddowns on all your units?

Yes _____ No X

Company Name Christian-Lutheran Nursing Home

Address 4444 Reservoir Blvd.

City Wyda State Minn Zip Code 55421

Name and Position Steven P. Eisenmenger, Maint Engineer

MINNESOTA BODY & EQUIPMENT CO.
Telephone: (612) 445-8300
7380 Highway 101 • Shakopee, Minnesota 55379 • 1 Mile East of Valleyfair

To All Owners of Wayne Special Care Buses 1/9/79

Ladies and Gentlemen:

The legislature passed a bill requiring frame mount wheelchair tie downs on all buses and vans used in Minnesota. At this time there is no state approved frame mount tie down available. The ones we have looked at are high priced and most are hard for the drivers or attendants to hook up. We will be attending a hearing very soon trying to make amendments to this bill. One would be the continued use of the tire mount wheelchair tie down you are now using. We ask that you fill in this questionare and return it as soon as possible so your views can be heard.

1. Have you had damage to wheelchairs due to the use of a tire mount holddown?

Yes _____ No X

2. Is the tire mount easy for the attendant to use?

Yes X No _____

3. Are you satisfied with the tire mount wheelchair holddown you are now using?

Yes X No _____

4. Do you want to change over to frame mount holddowns on all your units?

Yes _____ No X

Company Name EBENEZER SOCIETY TRANSPORTATION DEPT

Address 2722 PARK AVE

City MPLS State MN Zip Code 55407

Name and Position STEVEN M. NELSON TRANSPORTATION CO-ORDINATOR

2/19/79

MINNESOTA BODY & EQUIPMENT CO.
Telephone: (612) 445-8300
7380 Highway 101 • Shakopee, Minnesota 55379 • 1 Mile East of Valleyfair

To All Owners of Wayne Special Care Buses 1/9/79

Ladies and Gentlemen:

The legislature passed a bill requiring frame mount wheelchair tie downs on all buses and vans used in Minnesota. At this time there is no state approved frame mount tie down available. The ones we have looked at are high priced and most are hard for the drivers or attendants to hook up. We will be attending a hearing very soon trying to make amendments to this bill. One would be the continued use of the tire mount wheelchair tie down you are now using. We ask that you fill in this questionare and return it as soon as possible so your views can be heard.

1. Have you had damage to wheelchairs due to the use of a tire mount holddown?

Yes _____ No X

2. Is the tire mount easy for the attendant to use?

Yes X No _____

3. Are you satisfied with the tire mount wheelchair holddown you are now using?

Yes X No _____

4. Do you want to change over to frame mount holddowns on all your units?

Yes _____ No X

Company Name Trevilla of Golden Valley

Address 7505 Country Club Drive

City Golden Valley State Mn. Zip Code 55427

Name and Position Dick Galeko / Activity Director

MINNESOTA BODY & EQUIPMENT CO.
Telephone: (612) 445-8300
7380 Highway 101 • Shakopee, Minnesota 55379 • 1 Mile East of Valleyfair

To All Owners of Wayne Special Care Buses 1/9/79

Ladies and Gentlemen:

The legislature passed a bill requiring frame mount wheelchair tie downs on all buses and vans used in Minnesota. At this time there is no state approved frame mount tie down available. The ones we have looked at are high priced and most are hard for the drivers or attendants to hook up. We will be attending a hearing very soon trying to make amendments to this bill. One would be the continued use of the tire mount wheelchair tie down you are now using. We ask that you fill in this questionare and return it as soon as possible so your views can be heard.

1. Have you had damage to wheelchairs due to the use of a tire mount holddown?

Yes _____ No ✓

2. Is the tire mount easy for the attendant to use?

Yes ✓ No _____

3. Are you satisfied with the tire mount wheelchair holddown you are now using?

Yes ✓ No _____

4. Do you want to change over to frame mount holddowns on all your units?

Yes _____ No ✓

Company Name Ind School Dist 194

Address 8670 - 210 West

City Lakeville State Minn Zip Code 55044

Name and Position Raymond Jusk - Business Administrator

THIS IS THE TYPE MOUNT
YOU ARE NOW USING
PLEASE LOOK THESE OVER
BEFORE FILLING IN THE
ATTACHED FORM

(This piece was sent with our letter to clients.)

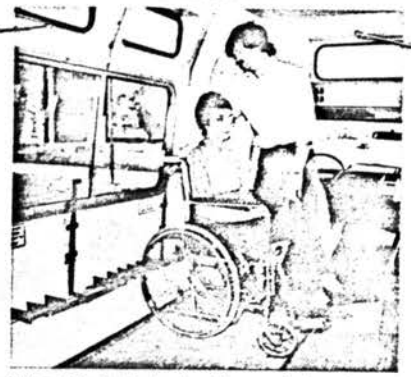

Wheelchair is locked to wall by simply pushing lever down. Pull lever up, and chair is released.

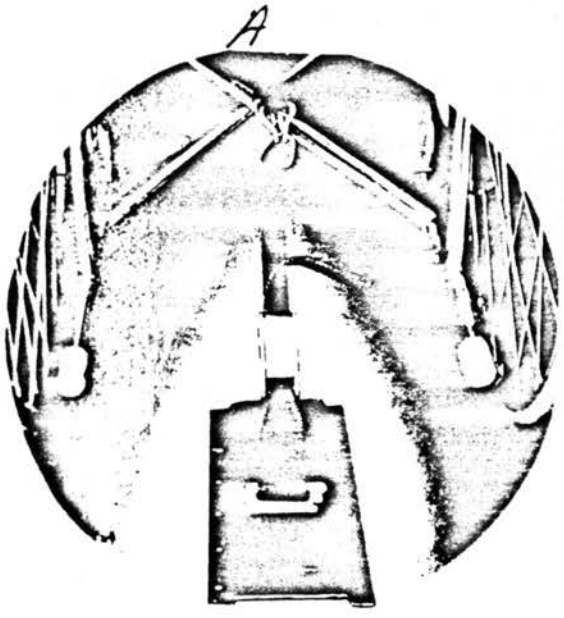

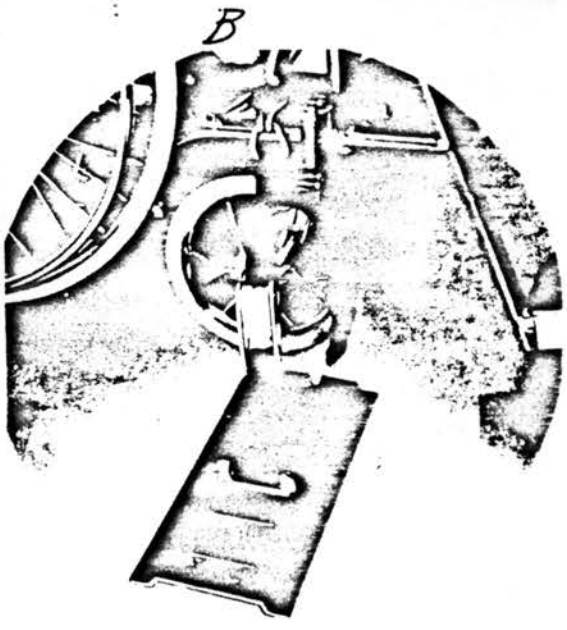

A-B-C ARE FRAME MOUNT BY ONE MANUFACTURER

D- IS A FRAME MOUNT BY ANOTHER MANUFACTURER

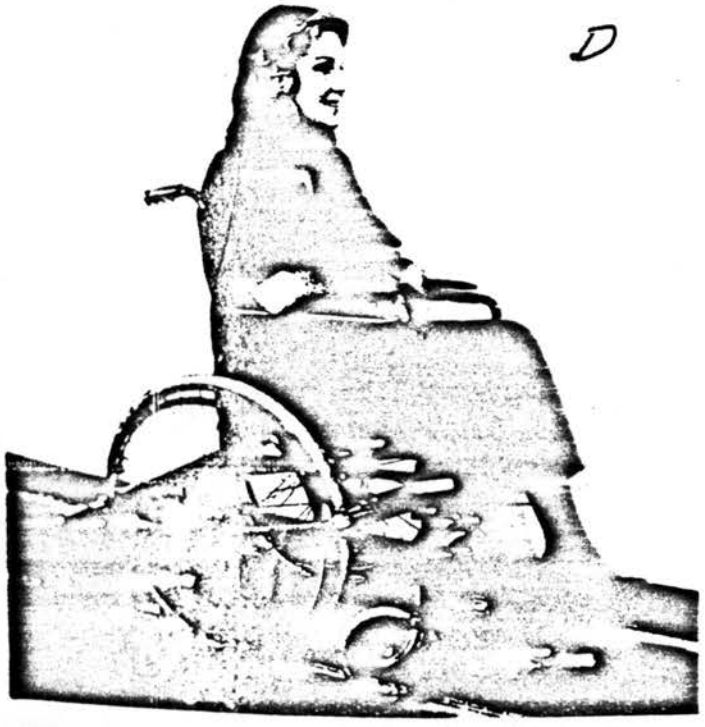

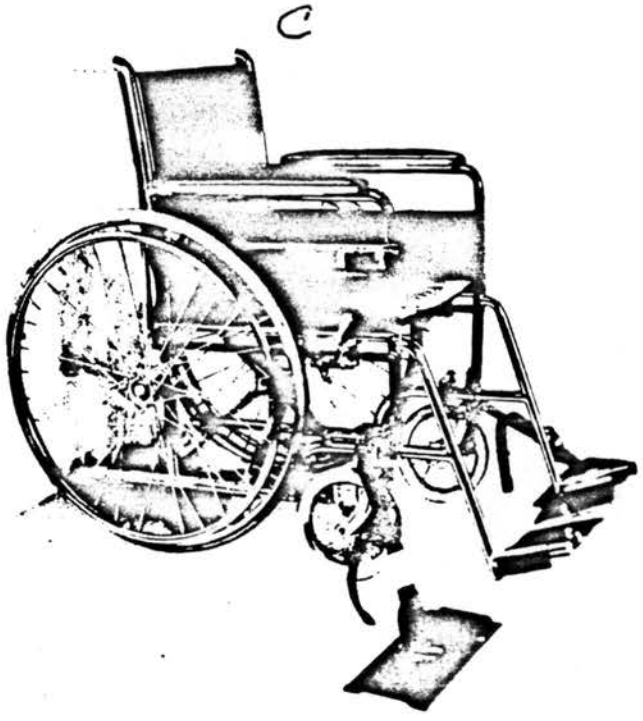

Mille Lacs County Area

Developmental Achievement Center, Inc.

P.O. Box 92
Milaca, Minn. 56353

March 23, 1979

Mr. Roger Blohm
Minnesota Body & Equipment Co.
7380 Highway 101
Shakopee, MN 55379

Dear Mr. Blohm:

We currently have three sets of wheelchair lockdowns, manufactured by Wheel Service Company. Although they seem to be sturdy devices, they are rather time consuming and unhandy to use.

The main problem comes with adjusting the lockdowns to fit the outside diameter of the wheelchair wheels. It is very difficult to find the correct slot and only one slot will fit. The second problem we have found is that two wheelchairs can be placed so that the adjacent over center clamp handles interfere with each other. This makes it difficult to clamp and unclamp these chairs without skinning the knuckles or pinching a finger.

I would like to have the opportunity of trying out your lockdowns which appear to be easier to operate. Perhaps if I bring some Board members down to see your Busette floor model, I could arrange to bring a wheelchair along.

Sincerely,

Frederic C. Hoffman

Frederic C. Hoffman
Director

FCH:dgw

BOTH OF THE ATTACHED COULD MOST SPOTS BUT ARE NOT THE ANSWER TO THE NEEDS OF THE USER.

Franelock™ WHEELCHAIR Holder

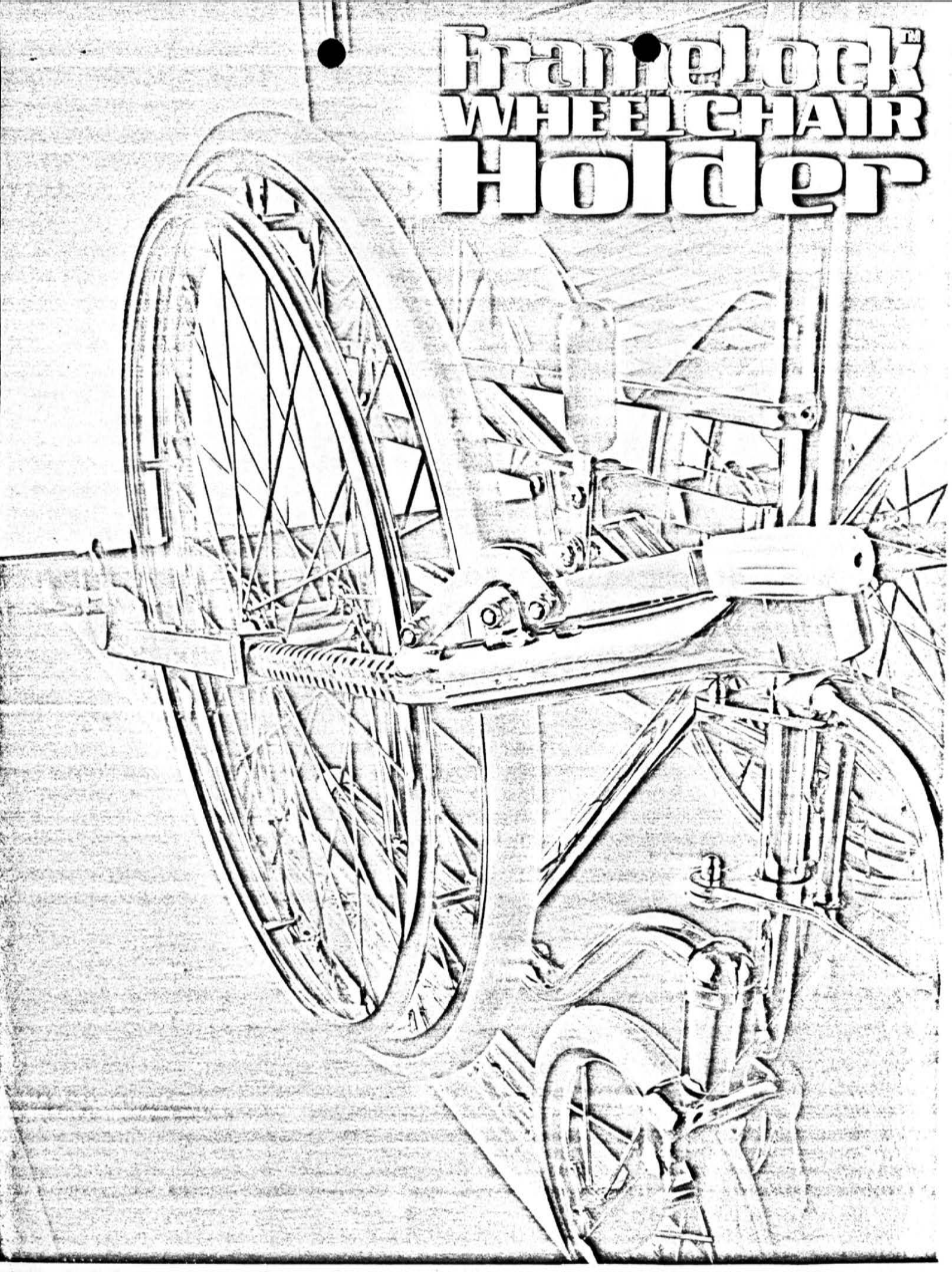

Framelock™ WHEELCHAIR Holder

Framelock is a new and versatile system which gives complete interchangeability from conventional seating to forward, rearward or side facing wheelchair positions. This newly developed system is

SAFE • SIMPLE • SECURE

Interchangeable Seat or Wheelchair Installation

Special aluminum alloy, tapered profile, floor track is designed for attachment to the floor. The track provides mounting for conventional seat or special mounting for forward or rearward facing wheelchair position. Patented "lock on - lift off" design allows fast and simple change without tools.

Framelock™ Holds Wheelchair Firmly

The patented Framelock™ arm assembly attaches to the "T" slide and allows easy adjustment laterally and horizontally to fit virtually all wheelchair designs. The arm is secured to the wheelchair frame with an easily operated over center lock. When the Framelock™ arm is secured in place there can be no movement of the wheelchair in any direction.

The Framelock™ Wheelchair Holder has been thoroughly tested by an independent testing laboratory. The copy below is a summary report of the test results. The full report is available on request.

SHELLER-GLOBE CORPORATION
Vehicle Planning and Development Center
3555 ST. JOHNS ROAD
LIMA, OHIO 45804
TELEPHONE 419/227-7772

TEST REPORT # EE-194-78
DATE ISSUED: 7-31-78
FILE # 1143

ENGINEERING EVALUATION TEST REPORT
SUMMARY

MATERIAL OR PRODUCT TESTED WHEELCHAIR HOLDER AND INTERCHANGEABLE SEAT WHEELCHAIR SYSTEM DEFINED ON ATTACHED CHAS. OLSON & SONS BROCHURE SHOWN ON PAGE 6

TEST DESCRIPTION TO TEST THE INTEGRITY OF A WHEELCHAIR HOLDER AND INTERCHANGEABLE SEAT/WHEELCHAIR SYSTEM PER LETTER OF REQUEST DATED 5-23-78 (SEE PAGE 5)

CONTROLLING SPEC OR STANDARD (1) WHEELCHAIR VERSION - FMVSS 207 "SEATING SYSTEMS" (2) SCHOOL BUS SEAT VERSION - FMVSS 222 "SCHOOL BUS PASSENGER SEATING & CRASH PROTECTION"

CONCLUSIONS (1) THE ADJUSTABLE WHEELCHAIR LOCKING ARMS WITHSTOOD A FORCE WHICH EXCEEDS THE REQUIREMENTS OF FMVSS 207 FOR THE WHEELCHAIR USED. (2) THE LOW PROFILE GUIDE RAILS USED IN CONJUNCTION WITH A 30" INTERCHANGEABLE SEAT EXCEEDS THE REQUIREMENTS OF FMVSS 222 FORWARD PERFORMANCE.

Test Conducted by G.Wells/R.McNeal Date 6-6 & 7-6-78
Test Engineer I. W. Strayer (Acting) Date 6-6 & 7-6-78
Manager, Vehicle Development I. W. Strayer Date 7-31-78

The side facing position of the wheelchair is accomplished by attaching the "T" slide to the side of the vehicle.



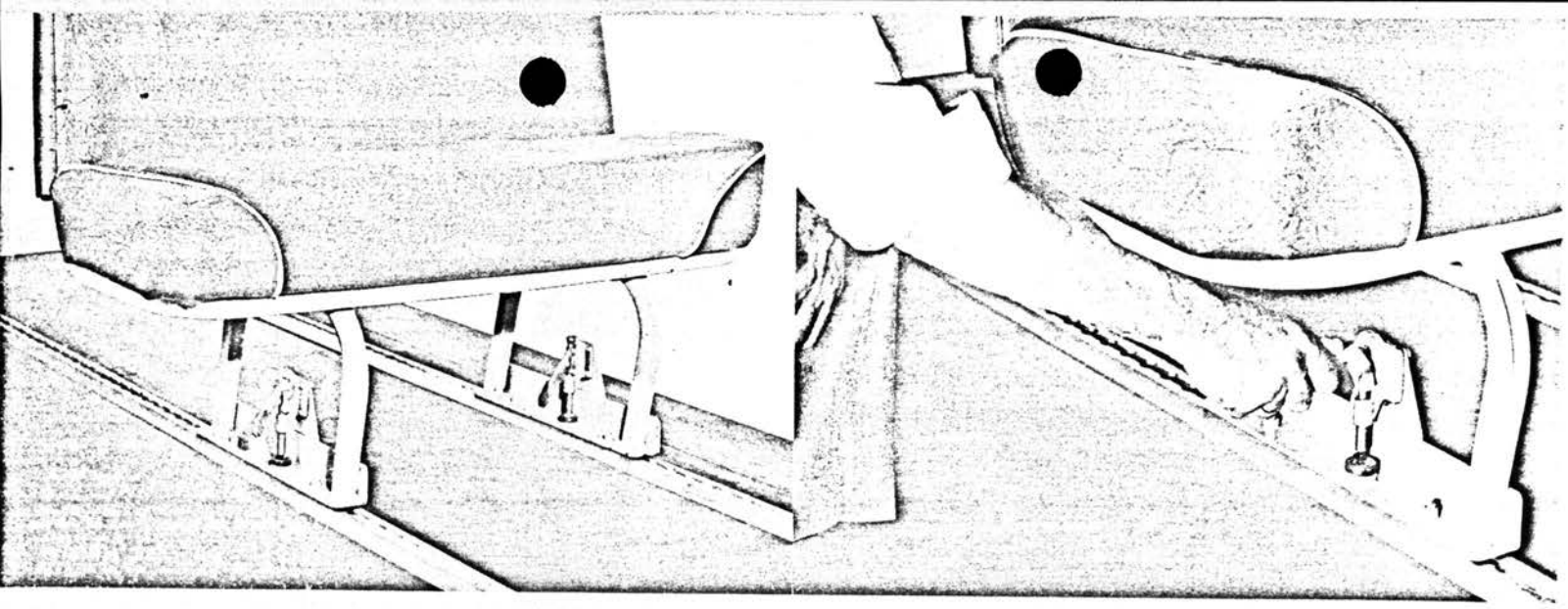

1 Special aluminum alloy, tapered profile, floor tracks attach permanently to floor of vehicle and hold seat securely in place for conventional seating.

2 The simple "lock on - lift off" device makes it easy to interchange seat or wheelchair.

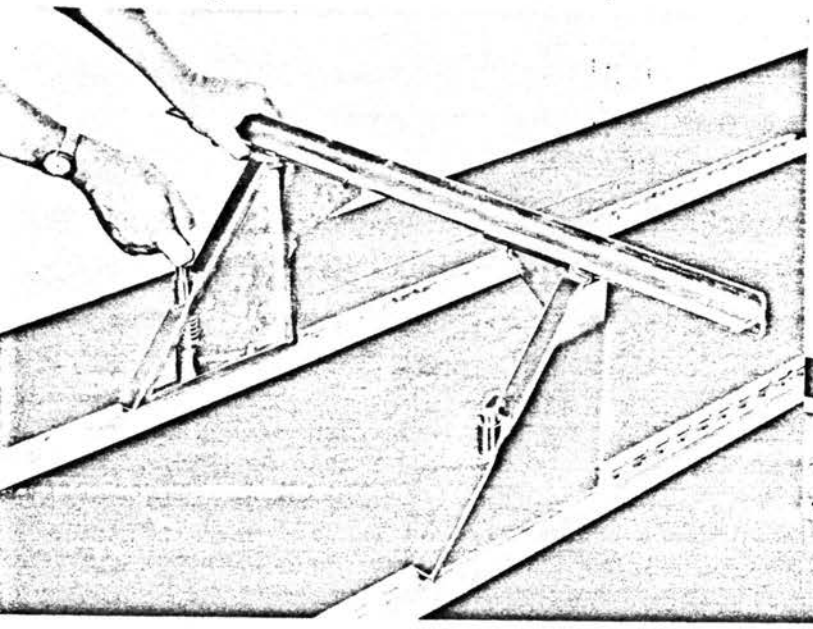

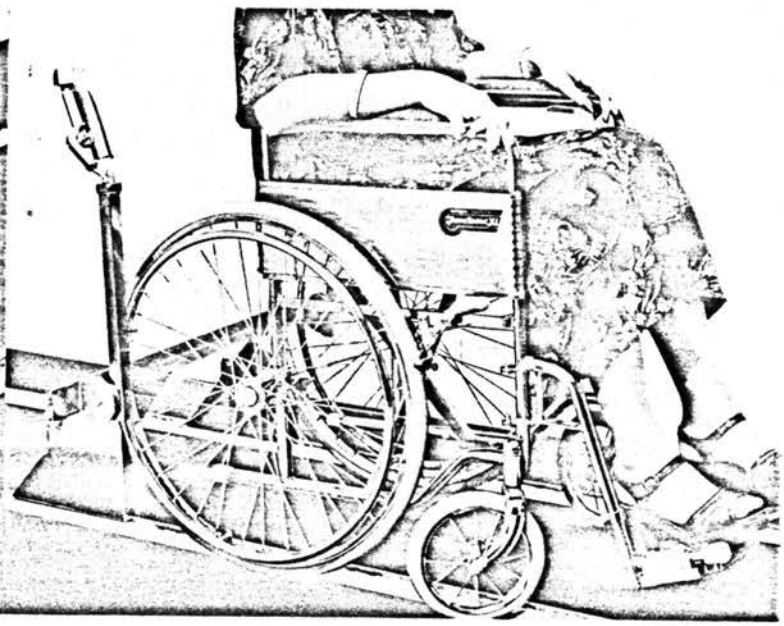

3 The panel assemblies, with "T" slide, are easily dropped into the floor tracks to provide forward or rearward facing wheelchair positions.

4. The wheelchair is positioned in place. Note that the securing device is held in a vertical position through a cam action against the "T" slide. This clears the floor area for unobstructed wheelchair positioning.

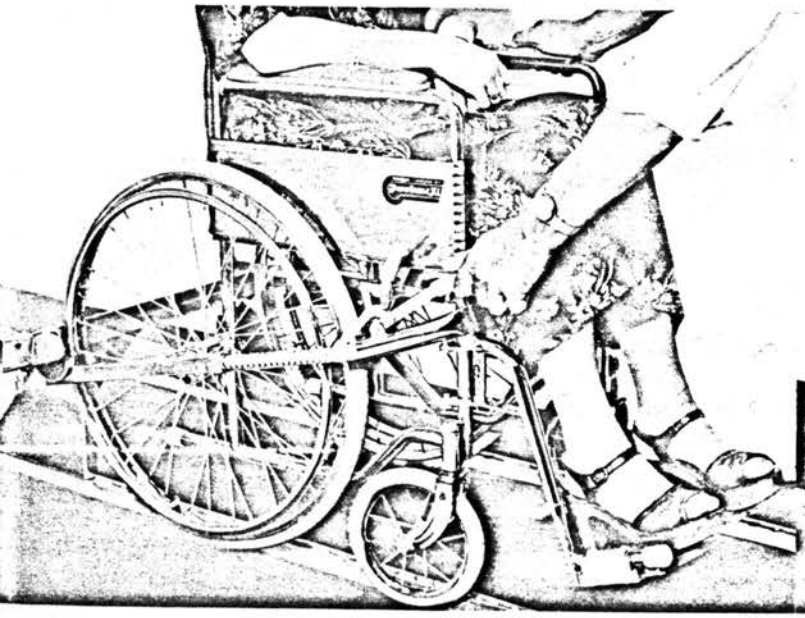

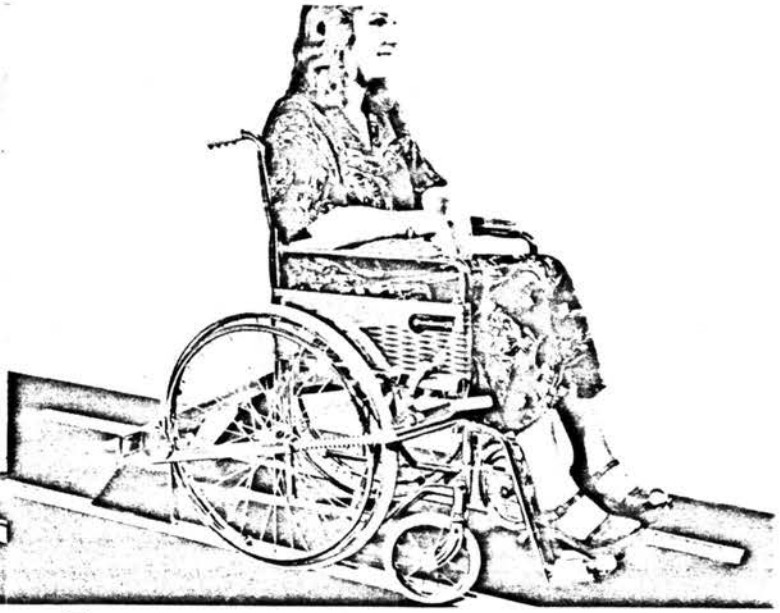

5 Lateral and length adjustments of the holder is fast and simple. The over center lock permits fast, solid attachment to the wheelchair frame.

6 Wheelchair passenger enjoys ride with virtually no chair motion in any direction.

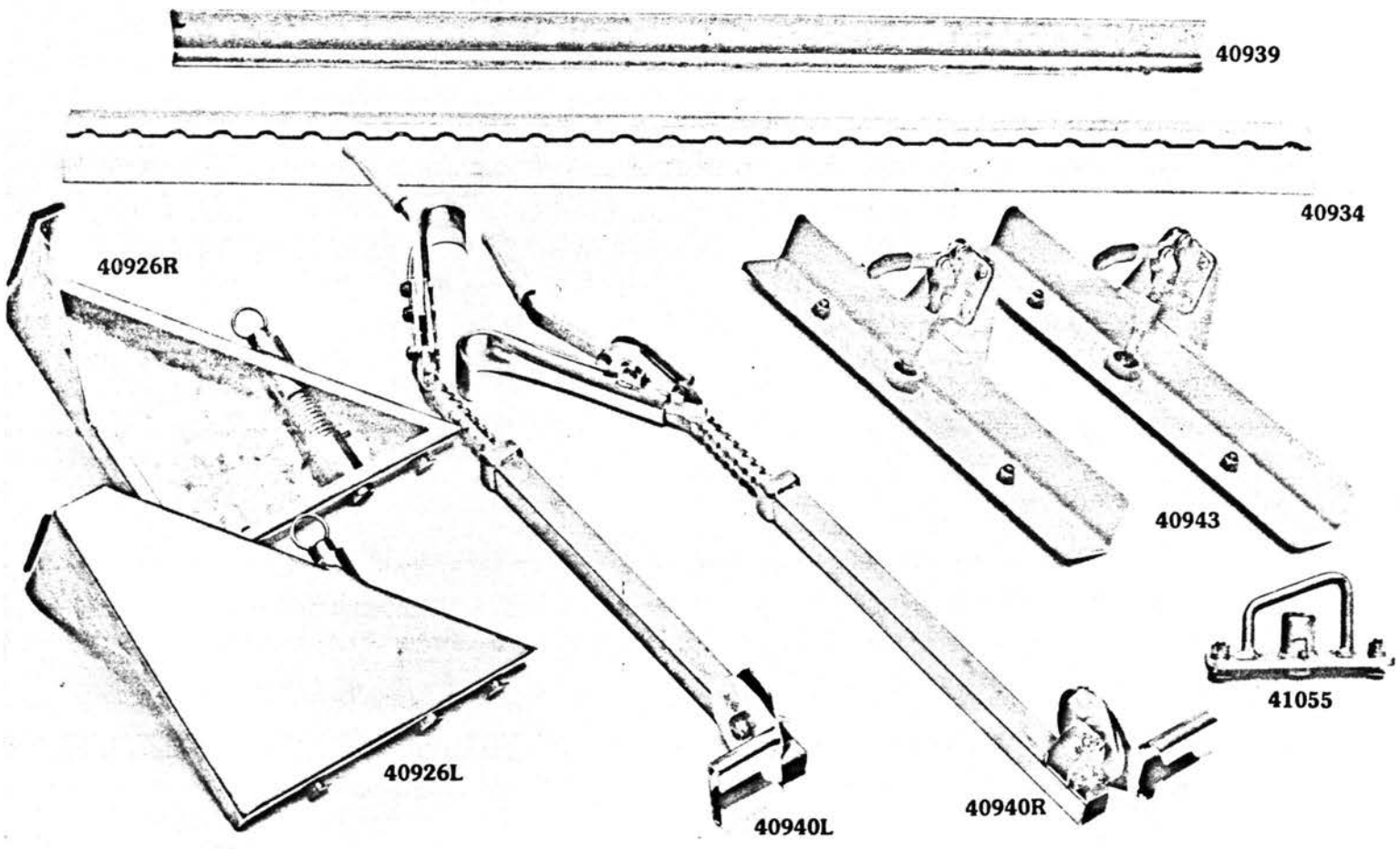

U.S. PATENTS 4,093,303 4,114,947

Framelock™ WHEELCHAIR Holder

PARTS LIST

The following is the parts list for the Framelock™ Wheelchair Holder. The total system can be ordered and would include all of the parts listed below. Individual parts can also be ordered. In any case please be sure to order by part number.

1 Wheelchair securement device - Part Number: **40940**
Consists of:
1 - right arm assembly - Part Number: **40940R**
1 - left arm assembly - Part Number: **40940L**

1 Slide securement device
Part Number: **40939**
36" length only

1 Floor track
Part Number: **40934**
42" Length only.

1 set of forward or rearward facing panels
Part Number: **40926**
Consists of:
1 - right panel assembly - Part Number: **40926R**
1 - left panel assembly - Part Number: **40926L**

1 Set Seat Lock Assemblies - Part Number: **40943**

1 Seat belt holder - Part Number: **41055**

MANUFACTURED BY:
CHAS. OLSON & SONS
and
WHEEL SERVICE CO., INC.
677 TRANSFER ROAD • ST. PAUL, MN 55114
PHONE 612/641-3900

DISTRIBUTED BY:

LOOK AT THE MESS IN THE BUS.
BUT THEY MOVE THE SPOT.

A NEW SAFER WAY...

...WHILE ON THE WAY.

DRIVERS WOULD HAVE A HARD TIME HOOKING UP 3-4 WHEELCHAIRS WHILE DRIVING

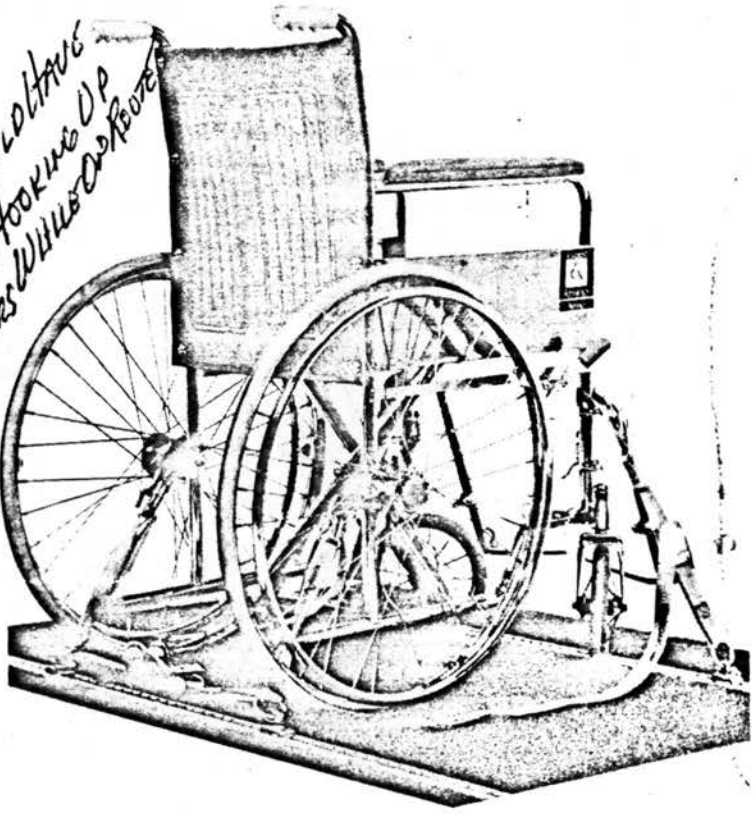

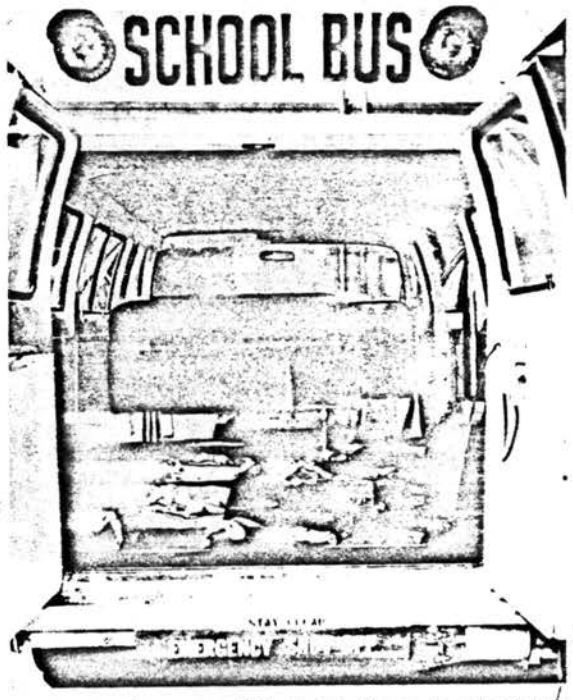

Rear view of a van outfitted with Aeroquip wheelchair tie-downs.

NEW! Aeroquip wheelchair securement systems fit virtually all wheelchair designs, including motorized chairs.

MESS OF FLOOR IN OUR MINNESOTA WINTERS

Aeroquip wheelchair securement systems are designed to keep wheelchairs safely immobile during transit on buses and vans. Quickly and easily attached by a driver or attendant, the tie-down systems protect the equipment as well as the passenger. Wheelchairs aren't scratched or dented because there's no metal-to-metal contact when properly installed.

Field tested in actual service, thousands are in use in California school systems and are approved by the California Highway Patrol.

Available in five separate systems, the tie-downs have a minimum break strength of 2,500 lbs. per anchorage leg. Another plus, Aeroquip wheelchair securement systems fit virtually all wheelchair designs including motorized chairs.

For further information, write for Bulletin CCB-54. Aeroquip Corporation, Industrial Division, Jackson, Michigan 49203, *a subsidiary of Libbey-Owens-Ford Company.*

FREE! Write for Bulletin CCB-54



Aeroquip turns problems into products

Aeroquip

Circle 112 on SBF Action Card

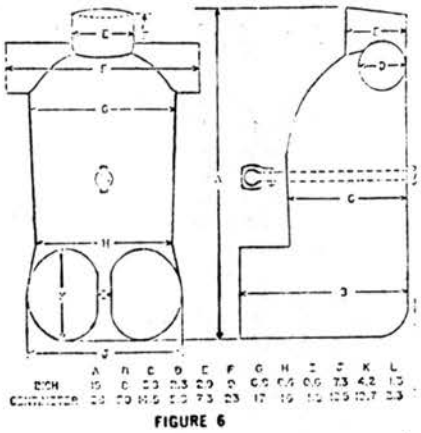

	A	B	C	D	E	F	G	H	I	J	K	L
INCH	15	6	2.3	5.3	2.9	9	6.9	6.4	6.6	7.3	4.2	13
CENTIMETER	38	15	5.8	13.5	7.3	23	17	16	16	18.5	10.7	33

FIGURE 6

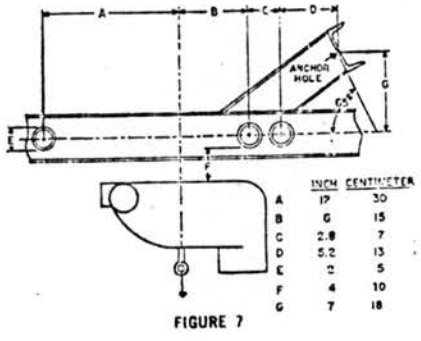

	INCH	CENTIMETER
A	17	30
B	6	15
C	2.8	7
D	5.2	13
E	2	5
F	4	10
G	7	18

FIGURE 7

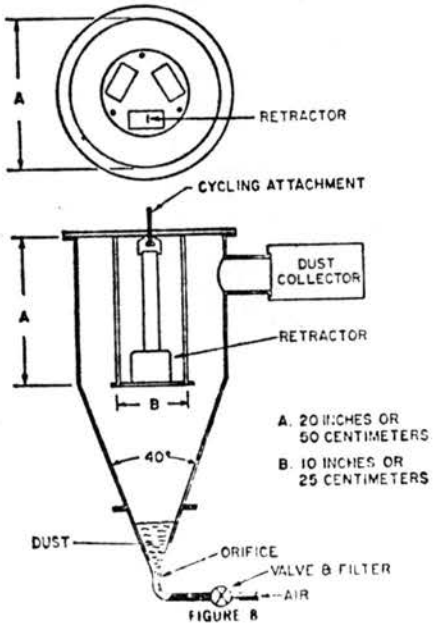

FIGURE 8

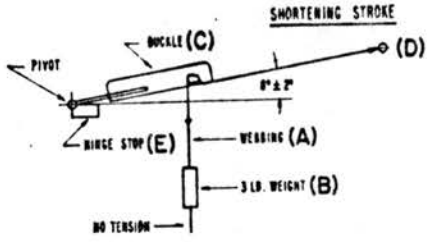

FIGURE 9

[36 FR 22902, Dec. 2, 1971, as amended at 38 FR 22959, Aug. 28, 1973; 39 2771, Jan. 24, 1974]

§ 571.210 Standard No. 210; Seat belt assembly anchorages.

S1. *Purpose and scope.* This standard establishes requirements for seat belt assembly anchorages to insure their proper location for effective occupant restraint and to reduce the likelihood of their failure.

S2. *Application.* This standard applies to passenger cars, multipurpose passenger vehicles, trucks, and buses.

S3. *Definition.* "Seat belt anchorage" means the provision for transferring seat belt assembly loads to the vehicle structure.

S4. *Requirements.*

S4.1 *Type.*

S4.1.1 Seat belt anchorages for a Type 2 seat belt assembly shall be installed for each forward-facing outboard designated seating position in passenger cars other than convertibles, and for each designated seating position for which a Type 2 seat belt assembly is re
hicles other t
S4.1.2 Sea
Type 1 or a
shall be inst
seating posit
seat in a bu
position for
ages for a T
are required
S4.2 *Stren*
S4.2.1 Exc
the anchora
assembly or
Type 2 seat
stand a 5,00
in accordanc
S4.2.2 Th
seat belt a
3,000-pound
cordance wit
S4.2.3 Pe
rupture of a
surrounding
be a failure
sustained fo
S4.2.4 Ex
anchorages
rearward-fac
seat belt an
ignated se
tested by s
seat belt as
anchorages.
S4.3 *Loc*
tion, "forwa
in which th
rectional re
preted acco
S4.3.1 *Se*
1 seat belt
portion of
S4.3.1.1
the seat be
seat frame,
erence poi
point of th
taching it t
adjustable
inches forw
the seatin
nearest co
the hardw
chorage fc
rearmost
ward from
with the
20° and no

assembly is required by § 571.208 in vehicles other than passenger cars.

S4.1.2 Seat belt anchorages for a Type 1 or a Type 2 seat belt assembly shall be installed for each designated seating position, except a passenger seat in a bus or a designated seating position for which seat belt anchorages for a Type 2 seat belt assembly are required by S4.1.1.

S4.2 *Strength.*

S4.2.1 Except for side-facing seats, the anchorage for a Type 1 seat belt assembly or the pelvic portion of a Type 2 seat belt assembly shall withstand a 5,000-pound force when tested in accordance with § 5.1.

S4.2.2 The anchorage for a Type 2 seat belt assembly shall withstand 3,000-pound forces when tested in accordance with S5.2.

S4.2.3 Permanent deformation or rupture of a seat belt anchorage or its surrounding area is not considered to be a failure, if the required force is sustained for the specified time.

S4.2.4 Except for common seat belt anchorages for forward-facing and rearward-facing seats, floor-mounted seat belt anchorages for adjacent designated seating positions shall be tested by simultaneously loading the seat belt assemblies attached to those anchorages.

S4.3 *Location.* As used in this section, "forward" means in the direction in which the seat faces, and other directional references are to be interpreted accordingly.

S4.3.1 *Seat belt anchorages for Type 1 seat belt assemblies and the pelvic portion of Type 2 seat belt assemblies.*

S4.3.1.1 In an installation in which the seat belt does not bear upon the seat frame, a line from the seating reference point to the nearest contact point of the belt with the hardware attaching it to the anchorage for a nonadjustable seat, or from a point 2.50 inches forward of and 0.375 inch above the seating reference point to the nearest contact point of the belt with the hardware attaching it to the anchorage for an adjustable seat in its rearmost position, shall extend forward from the anchorage at an angle with the horizontal of not less than 20° and not more than 75°.

S4.3.1.2 In an installation in which the belt bears upon the seat frame, the seat belt anchorage, if not on the seat structure, shall be aft of the rearmost belt contact point on the seat frame with the seat in the rearmost position. The line from the seating reference point to the nearest belt contact point on the seat frame shall extend forward from that contact point at an angle with the horizontal of not less than 20° and not more than 75°.

S4.3.1.3 In an installation in which the seat belt anchorage is on the seat structure, the line from the seating reference point to the nearest contact point of the belt with the hardware attaching it to the anchorage shall extend forward from that contact point at an angle with the horizontal of not less than 20° and not more than 75°.

S4.3.1.4 Anchorages for an individual seat belt assembly shall be located at least 6.50 inches apart laterally, measured between the vertical centerlines of the bolt holes.

S4.3.2 *Seat belt anchorages for the upper torso portion of Type 2 seat belt assemblies.* With the seat in its full rearward and downward position and the seat back in its most upright position, the seat belt anchorage for the upper end of the upper torso restraint shall be located within the acceptable range shown in Figure 1, with reference to a two dimensional manikin described in SAE Standard J826 (November 1962) whose "H" point is at the seating reference point and whose torso line is at the same angle from the vertical as the seat back.

S5. *Test procedures.* Each vehicle shall meet the requirements of S4.2 when tested according to the following procedures. Where a range of values is specified, the vehicle shall be able to meet the requirements at all points within the range.

S5.1 *Seats with Type 1 or Type 2 seat belt anchorages.* With the seat in its rearmost position, apply a force of 5,000 pounds in the direction in which the seat faces to a pelvic body block as described in Figure 2, restrained by a Type 1 or the pelvic portion of a Type 2 seat belt assembly, as applicable, in a plane parallel to the longitudinal cen-

terline of the vehicle, with an initial force application angle of not less than 5° nor more than 15° above the horizontal. Apply the force at the onset rate of not more than 50,000 pounds per second. Attain the 5,000-pound force in not more than 30 seconds and maintain it for 10 seconds.

S5.2 *Seats with Type 2 seat belt anchorages.* With the seat in its rearmost position, apply forces of 3,000 pounds in the direction in which the seat faces simultaneously to pelvic and upper torso body blocks as described in Figures 2 and 3, restrained by a Type 2 seat belt assembly, in a plane parallel to the longitudinal centerline of the vehicle, with an initial force application angle of not less than 5° nor more than 15° above the horizontal. Apply the forces at the onset rate of not more than 30,000 pounds per second. Attain the 3,000-pound forces in not more than 30 seconds and maintain them for 10 seconds.

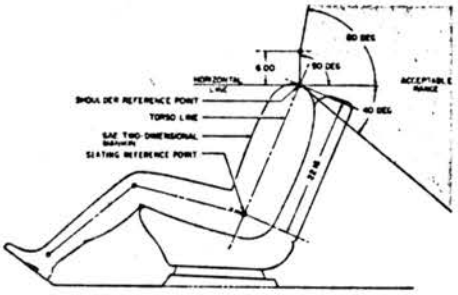

FIGURE 1—LOCATION OF ANCHORAGE FOR UPPER TORSO RESTRAINT

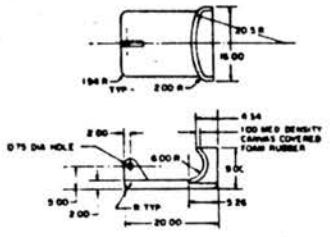

FIGURE 2—BODY BLOCK FOR LAP BELT ANCHORAGE

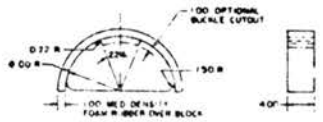

FIGURE 3—BODY BLOCK FOR COMBINATION SHOULDER AND LAP BELT ANCHORAGE

[36 FR 22902, Dec. 2, 1971, as amended at 37 FR 9323, May 9, 1972]

§ 571.211 Standard No. 211; Wheel nuts, wheel discs, and hub caps.

S1. *Purpose and scope.* This standard precludes the use of wheel nuts, wheel discs, and hub caps that constitute a hazard to pedestrians and cyclists.

S2. *Application.* This standard applies to passenger cars, multipurpose passenger vehicles, and passenger car and multipurpose passenger vehicle equipment.

S3. *Requirements.* Wheel nuts, hub caps, and wheel discs for use on passenger cars and multipurpose passenger vehicles shall not incorporate winged projections.

NOTE: A clarification of the term "wheel nuts" as used in the requirements section S3 of § 571.211 has been requested. This section states that "wheel nuts, hub caps, and wheel discs for use on passenger cars and multipurpose passenger vehicles shall not incorporate winged projections." A "wheel nut" is an exposed nut that is mounted at the center or hub of a wheel, and not the ordinary small hexagonal nut, one of several which secures a wheel to an axle, and which is normally covered by a hub cap or wheel disc.

§ 571.212 Standard No. 212; Windshield mounting.

S1. *Purpose and scope.* This standard establishes windshield retention requirements for windshield mountings.



DPS # 11

§ 571.209 Standard No. 209; Seat belt assemblies.

S1. *Purpose and Scope.* This standard specifies requirements for seat belt assemblies.

S2. *Application.* This standard applies to seat belt assemblies for use in passenger cars, multipurpose passenger vehicles, trucks, and buses.

S3. *Definitions.* "Seat belt assembly" means any strap, webbing, or similar device designed to secure a person in a motor vehicle in order to mitigate the results of any accident, including all necessary buckles and other fasteners, and all hardware designed for installing such seat belt assembly in a motor vehicle.

"Pelvic restraint" means a seat belt assembly or portion thereof intended to restrain movement of the pelvis.

"Upper torso restraint" means a portion of a seat belt assembly intended to restrain movement of the chest and shoulder regions.

"Hardware" means any metal or rigid plastic part of a seat belt assembly.

"Buckle" means a quick release connector which fastens a person in a seat belt assembly.

"Attachment hardware" means any or all hardware designed for securing the webbing of a seat belt assembly to a motor vehicle.

"Adjustment hardware" means any or all hardware designed for adjusting the size of a seat belt assembly to fit the user, including such hardware that may be integral with a buckle, attachment hardware, or retractor.

"Retractor" means a device for storing part or all of the webbing in a seat belt assembly.

"Nonlocking retractor" means a retractor from which the webbing is extended to essentially its full length by a small external force, which provides no adjustment for assembly length, and which may or may not be capable of sustaining restraint forces at maximum webbing extension.

"Automatic-locking retractor" means a retractor incorporating adjustment hardware by means of a positive self-locking mechanism which is capable when locked of withstanding restraint forces.

"Emergency-locking retractor" means a retractor incorporating adjustment hardware by means of a locking mechanism that is activated by vehicle acceleration, webbing movement relative to the vehicle, or other automatic action during an emergency and is capable when locked of withstanding restraint forces.

"Seat back retainer" means the portion of some seat belt assemblies designed to restrict forward movement of a seat back.

"Webbing" means a narrow fabric woven with continuous filling yarns and finished selvages.

"Strap" means a narrow nonwoven material used in a seat belt assembly in place of webbing.

"Type 1 seat belt assembly" is a lap belt for pelvic restraint.

"Type 2 seat belt assembly" is a combination of pelvic and upper torso restraints.

"Type 2a shoulder belt" is an upper torso restraint for use only in conjunction with a lap belt as a Type 2 seat belt assembly.

"Type 3 seat belt assembly" is a combination pelvic and upper torso restraint for persons weighing not more than 50 pounds or 23 kilograms and capable of sitting upright by themselves, that is children in the approximate age range of 8 months to 6 years.

S4. *Requirements.*

S4.1 (a) *Single occupancy.* A seat belt assembly shall be designed for use by one, and only one, person at any one time.

(b) *Pelvic restraint.* A seat belt assembly shall provide pelvic restraint whether or not upper torso restraint is provided, and the pelvic restraint shall be designed to remain on the pelvis under all conditions, including collision or rollover of the motor vehicle. Pelvic restraint of a Type 2 seat belt assembly that can be used without upper torso restraint shall comply with requirement for Type 1 seat belt assembly in S4.1 to S4.4.

(c) *Upper torso restraint.* A Type 2 or type 3 seat belt assembly shall provide upper torso restraint without shifting the pelvic restraint into the abdominal region. An upper torso restraint shall be designed to minimize vertical forces on the shoulders and

spine. Hardware for upper torso restraint shall be so designed and located in the seat belt assembly that the possibility of injury to the occupant is minimized.

A Type 2a shoulder belt shall comply with applicable requirements for a Type 2 seat belt assembly in S4.1 to S4.4, inclusive.

(d) *Hardware.* All hardware parts which contact under normal usage a person, clothing, or webbing shall be free from burrs and sharp edges.

(e) *Release.* A Type 1 or Type 2 seat belt assembly shall be provided with a buckle or buckles readily accessible to the occupant to permit his easy and rapid removal from the assembly. A Type 3 seat belt assembly shall be provided with a quickly recognizable and easily operated release arrangement, readily accessible to an adult. Buckle release mechanism shall be designed to minimize the possibility of accidental release. A buckle with release mechanism in the latched position shall have only one opening in which the tongue can be inserted on the end of the buckle designed to receive and latch the tongue.

(f) *Attachment hardware.* A seat belt assembly shall include all hardware necessary for installation in a motor vehicle in accordance with SAE Recommended Practice J800B, Motor Vehicle Seat Belt Installations, September 1965. However, seat belt assemblies designed for installation in motor vehicles equipped with seat belt assembly anchorages that do not require anchorage nuts, plates, or washers, need not have such hardware, but shall have 7/16-20 UNF-2A or ½-13UNC-2A attachment bolts or equivalent hardware. The hardware shall be designed to prevent attachment bolts and other parts from becoming disengaged from the vehicle while in service. Reinforcing plates or washers furnished for universal floor installations shall be of steel, free from burrs and sharp edges on the peripheral edges adjacent to the vehicle, at least 0.06 inch in thickness and at least 4 square inches in projected area. The distance between any edge of the plate and the edge of the bolt hole shall be at least 0.6 inch. Any corner shall be rounded to a radius of not less than 0.25 inch or cut so that no corner angle is less than 135° and no side is less than 0.25 inch in length.

(g) *Adjustment.* (1) A Type 1 or Type 2 seat belt assembly shall be capable of adjustment to fit occupants whose dimensions and weight range from those of a 5th-percentile adult female to those of a 95th-percentile adult male. The seat belt assembly shall have either an automatic-locking retractor, an emergency-locking retractor, or an adjusting device that is within the reach of the occupant. A Type 3 seat belt assembly shall be capable of adjustment to fit any child capable of sitting upright and weighing not more than 50 pounds, unless it is specifically labeled for use on a child in a smaller weight range.

(2) A Type 1 or Type 2 seat belt assembly for use in a vehicle having seats that are adjustable shall conform to the requirements of S4.1(g)(1) regardless of seat position. However, if a seat has a back that is separately adjustable, the requirements of S4.1(g)(1) need be met only with the seat back in the manufacturer's nominal design riding position.

(3) The adult occupants referred to in S4.1(g)(1) shall have the following measurements:

	5th-percentile adult female	95th-percentile adult male
Weight	102 lbs.	215 lbs.
Erect sitting height	30.9 in.	38 in.
Hip breadth (sitting)	12.8 in.	16.4 in.
Hip circumference (sitting).	36.4 in.	47.2 in.
Waist circumference (sitting).	23.6 in.	42.5 in.
Chest depth	7.5 in.	10.5 in.
Chest circumference:		
(nipple)	30.5 in.	44.5 in.
(upper)	29.8 in.	
(lower)	26.6 in.	

(h) *Seat back retainer.* A Type 3 seat belt assembly designed for attachment to a seat back or for use in a seat with a hinged back shall include a seat back retainer unless such assembly is designed and labeled for use in specific models of motor vehicles in which the vehicle manufacturer has provided other adequate restraint for the seat back.

(i) *Webbing.* The ends of webbing in a seat belt assembly shall be protected or treated to prevent raveling. The end of webbing in a seat belt assembly having a metal-to-metal buckle that is used by the occupant to adjust the size of the assembly shall not pull out of the adjustment hardware at maximum size adjustment. Provision shall be made for essentially unimpeded movement of webbing routed between a seat back and seat cushion and attached to a retractor located behind the seat.

(j) *Strap.* A strap used in a seat belt assembly to sustain restraint forces shall comply with the requirements for webbing in S4.2, and if the strap is made from a rigid material, it shall comply with applicable requirements in S4.2, S4.3, and S4.4.

(k) *Marking.* Each seat belt assembly shall be permanently and legibly marked or labeled with year of manufacture, model, and name or trademark of manufacturer or distributor, or of importer if manufactured outside the United States. A model shall consist of a single combination of webbing having a specific type of fiber weave and construction, and hardware having a specific design. Webbings of various colors may be included under the same model, but webbing of each color shall comply with the requirements for webbing in S4.2.

(l) *Installation instructions.* A seat belt assembly or retractor shall be accompanied by an instruction sheet providing sufficient information for installing the assembly in a motor vehicle except for a seat belt assembly installed in a motor vehicle by an automobile manufacturer. The installation instructions shall state whether the assembly is for universal installation or for installation only in specifically stated motor vehicles, and shall include at least those items in SAE Recommended Practice, Motor Vehicle Seat Belt Installations—SAE J800b, published by the Society of Automotive Engineers.

(m) *Usage and maintenance instructions.* A seat belt assembly or retractor shall be accompanied by written instructions for the proper use of the assembly, stressing particularly the importance of wearing the assembly snugly and properly located on the body, and on the maintenance of the assembly and periodic inspection of all components. The instructions shall show the proper manner of threading webbing in the hardware of seat belt assemblies in which the webbing is not permanently fastened. Instructions for a nonlocking retractor shall include a caution that the webbing must be fully extended from the retractor during use of the seat belt assembly unless the retractor is attached to the free end of webbing which is not subjected to any tension during restraint of an occupant by the assembly. Instructions for Type 2a shoulder belt shall include a warning that the shoulder belt is not to be used without a lap belt.

(n) *Workmanship.* Seat belt assemblies shall have good workmanship in accordance with good commercial practice.

S4.2 *Requirements for webbing.*

(a) *Width.* The width of the webbing in a seatbelt assembly shall be not less than the following when measured under the conditions prescribed in S5.1(a):

(1) Type 1 and Type 2 assemblies—1.8 inches, except for portions that do not touch a 95th percentile adult male with the seat in any adjustment position and the seat back in the manufacturer's nominal design riding position.

(2) Type 3 seatbelt assembly—0.9 inch.

(b) *Breaking strength.* The webbing in a seat belt assembly shall have not less than the following breaking strength when tested by the procedures specified in S5.1(b): Type 1 seat belt assembly—6,000 pounds or 2,720 kilograms; Type 2 seat belt assembly—5,000 pounds or 2,270 kilograms for webbing in pelvic restraint and 4,000 pounds or 1,810 kilograms for webbing in upper torso restraint; Type 3 seat belt assembly—1,500 pounds or 680 kilograms for webbing in pelvic and upper torso restraints, 4,000 pounds or 1,810 kilograms for webbing in seat back retainer and for webbing connecting pelvic and upper torso restraints to attachment hardware when assembly has single webbing connection, or 3,000 pounds or 1,360 kilograms for webbing connecting pelvic

and upper torso restraint to attachment hardware when assembly has two or more webbing connections.

(c) *Elongation.* The webbing in a seat belt assembly shall not extend to more than the following elongations when subjected to the specified forces in accordance with the procedure specified in S5.1(c): Type 1 seat belt assembly—20 percent at 2,500 pounds or 1,130 kilograms; Type 2 seat belt assembly—30 percent at 2,500 pounds or 1,130 kilograms for webbing in pelvic restraint and 40 percent at 2,500 pounds or 1,130 kilograms for webbing in upper torso restraint; Type 3 seat belt assembly—20 percent at 700 pounds or 320 kilograms for webbing in pelvic and upper torso restraints, and 25 percent at 2,500 pounds or 1,130 kilograms for webbing in seat back retainer and for webbing connecting pelvic and upper torso restraints to attachment hardware when assembly has single webbing connection, or 25 percent at 1,800 pounds or 820 kilograms for webbing connecting pelvic and upper torso restraints to attachment hardware when assembly has two or more webbing connections.

(d) *Resistance to abrasion.* The webbing of a seatbelt assembly, after being subjected to abrasion as specified in either S5.1(d) or S5.3(d), shall have a breaking strength of not less than 75 percent of the breaking strength listed in S4.2(b) for that type of belt assembly.

(e) *Resistance to light.* The webbing in a seat belt assembly after exposure to the light of a carbon arc and tested by the procedure specified in S5.1(e) shall have a breaking strength not less than 60 percent of the strength before exposure to the carbon arc and shall have a color retention not less than No. 2 on the Geometric Gray Scale published by the American Association of Textile Chemists and Colorists, Post Office Box 886, Durham, N.C.

(f) *Resistance to micro-organisms.* The webbing in a seat belt assembly after being subjected to micro-organisms and tested by the procedures specified in S5.1(f) shall have a breaking strength not less than 85 percent of the strength before subjection to micro-organisms.

(g) *Colorfastness to crocking.* The webbing in a seat belt assembly shall not transfer color to a crock cloth either wet or dry to a greater degree than Class 3 on the AATCC Chart for Measuring Transference of Color published by the American Association of Textile Chemists and Colorists, when tested by the procedure specified in S5.1(g).

(h) *Colorfastness to staining.* The webbing in a seat belt assembly shall not stain to a greater degree than Class 3 on the AATCC Chart for Measuring Transference of Color published by the American Association of Textile Chemists and Colorists, when tested by the procedure specified in S5.1(h).

S4.3 *Requirements for hardware.*

(a) *Corrosion resistance.* (1) Attachment hardware of a seat belt assembly after being subjected to the conditions specified in S5.2(a) shall be free of ferrous corrosion on significant surfaces except for permissible ferrous corrosion at peripheral edges or edges of holes on underfloor reinforcing plates and washers. Alternatively, such hardware at or near the floor shall be protected against corrosion by at least a Type KS electrodeposited coating of nickel, or copper and nickel, and other attachment hardware shall be protected by a Type QS electrodeposited coating of nickel or copper and nickel, in accordance with Tentative Specifications for Electrodeposited Coatings of Nickel and Chromium on Steel, ASTM Designation: A166-61T, published by the American Society for Testing and Materials, 1916 Race Street, Philadelphia, Pa. 19103, but such hardware shall not be racked for electroplating in locations subjected to maximum stresses.

(2) Surfaces of buckles, retractors and metallic parts, other than attachment hardware, of a seat belt assembly after subjection to the conditions specified in S5.2(a) shall be free of ferrous or nonferrous corrosion which may be transferred, either directly or by means of the webbing, to the occupant or his clothing when the assembly is worn. After test, buckles shall conform to applicable requirements in paragraphs (d) to (g) of this section.

(b) *Temperature resistance.* Plastic or other nonmetallic hardware parts of a seat belt assembly when subjected to the conditions specified in S5.2(b) shall not warp or otherwise deteriorate to cause the assembly to operate improperly or fail to comply with applicable requirements in this section and S4.4.

(c) *Attachment hardware.* (1) Eye bolts, shoulder bolts, or other bolts used to secure the pelvic restraint of a seat belt assembly to a motor vehicle shall withstand a force of 9,000 pounds or 4,080 kilograms when tested by the procedure specified in S5.2(c)(1), except that attachment bolts of a seat belt assembly designed for installation in specific models of motor vehicles in which the ends of two or more seat belt assemblies cannot be attached to the vehicle by a single bolt shall have a breaking strength of not less than 5,000 pounds or 2,270 kilograms.

(2) Other attachment hardware designed to receive the ends of two seat belt assemblies shall withstand a tensile force of at least 6,000 pounds or 2,720 kilograms without fracture of any section when tested by the procedure specified in S5.2(c)(2).

(3) A seat belt assembly having single attachment hooks of the quick-disconnect type for connecting webbing to an eye bolt shall be provided with a retaining latch or keeper which shall not move more than 0.08 inch or 2 millimeters in either the vertical or horizontal direction when tested by the procedure specified in S5.2(c)(3).

(d) *Buckle release.* (1) The buckle of a Type 1 or Type 2 seat belt assembly shall release when a force of not more than 30 pounds or 14 kilograms is applied, and the buckle of a Type 3 seat belt assembly shall release when a force of not more than 20 pounds or 9 kilograms is applied as prescribed in S5.2.

(2) A buckle designed for pushbutton application of buckle release force shall have a minimum area of 0.7 square inch or 4.5 square centimeters with a minimum linear dimension of 0.4 inch or 10 millimeters for applying the release force, or a buckle designed for lever application of buckle release force shall permit the insertion of a cylinder 0.4 inch or 10 millimeters in diameter and 1.5 inches or 38 millimeters in length to at least the midpoint of the cylinder along the cylinder's entire length in the actuation portion of the buckle release. A buckle having other design for release shall have adequate access for two or more fingers to actuate release.

(3) The buckle of a Type 1 or Type 2 seat belt assembly shall not release under a compressive force of 400 pounds applied as prescribed in paragraph S5.2(d)(3). The buckle shall be operable and shall meet the applicable requirement of paragraph S4.4 after the compressive force has been removed.

(e) *Adjustment force.* The force required to decrease the size of a seat belt assembly shall not exceed 11 pounds or 5 kilograms when measured by the procedure specified in S5.2(e).

(f) *Tilt-lock adjustment.* The buckle of a seat belt assembly having tilt-lock adjustment shall lock the webbing when tested by the procedure specified in S5.2(f) at an angle of not less than 30 degrees between the base of the buckle and the anchor webbing.

(g) *Buckle latch.* The buckle latch of a seat belt assembly when tested by the procedure specified in S5.2(g) shall not fail, nor gall or wear to an extent that normal latching and unlatching is impaired, and a metal-to-metal buckle shall separate when in any position of partial engagement by a force of not more than 5 pounds or 2.3 kilograms.

(h) *Nonlocking retractor.* The webbing of a seat belt assembly shall extend from a nonlocking retractor within 0.25 inch or 6 millimeters of maximum length when a tension is applied as prescribed in S5.2(h). A nonlocking retractor on upper-torso restraint shall be attached to the nonadjustable end of the assembly, the reel of the retractor shall be easily visible to an occupant while wearing the assembly, and the maximum retraction force shall not exceed 1.1 pounds or 0.5 kilogram in any strap or webbing that contacts the shoulder when measured by the procedure specified in S5.2(h), unless the retractor is attached to the free end of webbing which is not subjected to any tension during restraint of an occupant by the assembly.

(i) *Automatic-locking retractor.* The webbing of a seat belt assembly equipped with an automatic locking retractor, when tested by the procedure specified in S5.2(i), shall not move more than 1 inch or 25 millimeters between locking positions of the retractor, and shall be retracted with a force under zero acceleration of not less than 0.6 pound or 0.27 kilogram when attached to pelvic restraint, and not less than 0.45 pound or 0.2 kilogram nor more than 1.1 pounds or 0.5 kilogram in any strap or webbing that contacts the shoulders of an occupant when the retractor is attached to upper torso restraint. An automatic locking retractor attached to upper torso restraint shall not increase the restraint on the occupant of the seat belt assembly during use in a vehicle traveling over rough roads as prescribed in S5.2(i).

(j) *Emergency-locking retractor.* An emergency-locking retractor of a Type 1 or Type 2 seatbelt assembly, when tested in accordance with the procedures specified in paragraph S5.2(j)—

(1) Shall lock before the webbing extends 1 inch when the retractor is subjected to an acceleration of 0.7g;

(2) Shall not lock, if the retractor is sensitive to webbing withdrawal, before the webbing extends 2 inches when the retractor is subjected to an acceleration of 0.3g or less;

(3) Shall not lock, if the retractor is sensitive to vehicle acceleration, when the retractor is rotated in any direction to any angle of 15° or less from its orientation in the vehicle;

(4) Shall exert a retractive force of at least 0.6 pound under zero acceleration when attached only to the pelvic restraint.

(5) Shall exert a retractive force of not less than 0.2 pound and not more than 1.1 pounds under zero acceleration when attached only to an upper torso restraint;

(6) Shall exert a retractive force of not less than 0.2 pound and not more than 1.5 pounds under zero acceleration when attached to a strap or webbing that restrains both the upper torso and the pelvis.

(k) *Performance of retractor.* A retractor used on a seat belt assembly after subjection to the tests specified in S5.2(k) shall comply with applicable requirements in paragraphs (h) to (j) of this section and S4.4, except that the retraction force shall be not less than 50 percent of its original retraction force.

S4.4 Requirements for assembly performance.

(a) *Type 1 seat belt assembly.* The complete seat belt assembly including webbing, straps, buckles, adjustment and attachment hardware, and retractors shall comply with the following requirements when tested by the procedures specified in C5.3(a):

(1) The assembly loop shall withstand a force of not less than 5,000 pounds or 2,270 kilograms; that is, each structural component of the assembly shall withstand a force or not less than 2,500 pounds or 1,130 kilograms.

(2) The assembly loop shall extend not more than 7 inches or 18 centimeters when subjected to a force of 5,000 pounds or 2,270 kilograms; that is, the length of the assembly between anchorages shall not increase more than 14 inches or 36 centimeters.

(3) Any webbing cut by the hardware during test shall have a breaking strength at the cut of not less than 4,200 pounds or 1,910 kilograms.

(4) Complete fracture through any solid section of metal attachment hardware shall not occur during test.

(b) *Type 2 seat belt assembly.* The components of a Type 2 seat belt assembly including webbing, straps, buckles, adjustment and attachment hardware, and retractors shall comply with the following requirements when tested by the procedure specified in S5.3(b):

(1) The structural components in the pelvic restraint shall withstand a force of not less than 2,500 pounds or 1,130 kilograms.

(2) The structural components in the upper torso restraint shall withstand a force of not less than 1,500 pounds or 680 kilograms.

(3) The structural components in the assembly that are common to pelvic and upper torso restraints shall withstand a force of not less than 3,000 pounds or 1,360 kilograms.

(4) The length of the pelvic restraint between anchorages shall not increase

more than 20 inches or 50 centimeters when subjected to a force of 2,500 pounds or 1,130 kilograms.

(5) The length of the upper torso restraint between anchorages shall not increase more than 20 inches or 50 centimeters when subjected to a force of 1,500 pounds or 680 kilograms.

(6) Any webbing cut by the hardware during test shall have a breaking strength of not less than 3,500 pounds or 1,590 kilograms at a cut in webbing of the pelvic restraint, or not less than 2,800 pounds or 1,270 kilograms at a cut in webbing of the upper torso restraint.

(7) Complete fracture through any solid section of metal attachment hardware shall not occur during test.

(c) *Type 3 seat belt assembly.* The complete seat belt assembly including webbing, straps, buckles, adjustment and attachment hardware, and retractors shall comply with the following requirements when tested by the procedures specified in S5.3(c):

(1) The complete assembly shall withstand a force of 2,000 pounds or 900 kilograms.

(2) The complete assembly shall extend not more than 12 inches or 30 centimeters when subjected to a force of 2,000 pounds or 900 kilograms.

(3) Any webbing cut by the hardware during test shall have a breaking strength of not less than 1,050 pounds or 480 kilograms at a cut in webbing of pelvic or upper torso restraints, or not less than 2,800 pounds or 1,270 kilograms at a cut in webbing of seat back retainer or in webbing connecting pelvic and upper torso restraint at attachment hardware.

(4) Complete fracture through any solid section of metal attachment hardware shall not occur during test.

S5 *Demonstration Procedures.*

S5.1 *Webbing.* (a) *Width.* The width of webbing from three seat belt assemblies shall be measured after conditioning for at least 24 hours in an atmosphere having relative humidity between 48 and 67 percent and a temperature of 23°±2° C. or 73.4±3.6° F. The tension during measurement of width shall be not more than 5 pounds or 2 kilograms on webbing from a Type 1 or Type 3 seat belt assembly, and 2,200±100 pounds or 1,000±50 kilograms on webbing from a Type 2 seat belt assembly. The width of webbing from a Type 2 seat belt assembly may be measured during the breaking strength test described in paragraph (b) of this section.

(b) *Breaking strength.* Webbing from three seat belt assemblies shall be conditioned in accordance with paragraph (a) of this section and tested for breaking strength in a testing machine of suitable capacity verified to have an error of not more than 1 percent in the range of the breaking strength of the webbing by the Tentative Methods of Verification of Testing Machines, ASTM Designation: E4-64, published by the American Society for Testing and Materials, 1916 Race Street, Philadelphia, Pa. 19103.

The machine shall be equipped with split drum grips illustrated in Figure 1, having a diameter between 2 and 4 inches or 5 and 10 centimeters. The rate of grip separation shall be between 2 and 4 inches per minute or 5 and 10 centimeters per minute. The distance between the centers of the grips at the start of the test shall be between 4 and 10 inches or 10 and 25 centimeters. After placing the specimen in the grips, the webbing shall be stretched continuously at a uniform rate to failure. Each value shall be not less than the applicable breaking strength requirement in S4.2(b), but the median value shall be used for determining the retention of breaking strength in paragraphs (d), (e), and (f) of this section.

(c) *Elongation.* Elongation shall be measured during the breaking strength test described in paragraph (b) of this section by the following procedure: A preload between 44 and 55 pounds or 20 and 25 kilograms shall be placed on the webbing mounted in the grips of the testing machine and the needle points of an extensometer, in which the points remain parallel during test, are inserted in the center of the specimen. Initially the points shall be set at a known distance apart between 4 and 8 inches or 10 and 20 centimeters. When the force on the webbing reaches the value specified in S4.2(c), the increase in separation of the points of the extensometer shall be measured and the percent elonga-

tion shall be calculated to the nearest 0.5 percent. Each value shall be not more than the appropriate elongation requirement in S4.2(c).

(d) *Resistance to abrasion.* The webbing from three seat belt assemblies shall be tested for resistance to abrasion by rubbing over the hexagon bar prescribed in Figure 2 in the following manner: The webbing shall be mounted in the apparatus shown schematically in Figure 2. One end of the webbing (A) shall be attached to a weight (B) which has a mass of 5.2±0.1 pounds or 2.35 ±0.05 kilograms, except that a mass of 3.3±0.1 pounds or 1.50±0.05 kilograms shall be used for webbing in pelvic and upper torso restraint of Type 3 seat belt assembly. The webbing shall be passed over the two new abrading edges of the hexagon bar (C) and the other end attached to an oscillating drum (D) which has a stroke of 13 inches or 33 centimeters. Suitable guides shall be used to prevent movement of the webbing along the axis of hexagonal bar C. Drum D shall be oscillated for 5,000 strokes or 2,500 cycles at a rate of 60±2 strokes per minute or 30±1, cycles per minute. The abraded webbing shall be conditioned as prescribed in paragraph (a) of this section and tested for breaking strength by the procedure described in paragraph (b) of this section. The median values for the breaking strengths determined on abraded and unabraded specimens shall be used to calculate the percentage of breaking strength retained.

(e) *Resistance to light.* Webbing at least 20 inches or 50 centimeters in length from three seat belt assemblies shall be suspended vertically on the inside of the specimen rack in a Type E carbon-arc light-exposure apparatus described in recommended Practice for Operation of Light- and Water-Exposure Apparatus (Carbon-Arc Type) for Artificial Weathering Test, ASTM Designation: E42-64, published by the American Society for Testing and Materials. The apparatus shall be operated without water spray at an air temperature of 60°±2° C. or 140°±3.6° F. measured at a point 1±0.2 inch or 25±5 millimeters outside the specimen rack and midway in height. The temperature sensing element shall be shielded from radiation. The specimens shall be exposed to the light from the carbon arc for 100 hours and then conditioned as prescribed in paragraph (a) of this section. The colorfastness of the exposed and conditioned specimens shall be determined on the Geometric Gray Scale issued by the American Association of Textile Chemists and Colorists. The breaking strength of the specimens shall be determined by the procedure prescribed in paragraph (b) of this section. The median values for the breaking strengths determined on exposed and unexposed specimens shall be used to calculate the percentage of breaking strength retained.

(f) *Resistance to micro-organisms.* Webbing at least 20 inches or 50 centimeters in length from three seat belt assemblies shall be subjected successively to the procedures prescribed in Section 1C1—Water Leaching, Section 1C2—Volatilization, and Section 1B3—Soil Burial Test of AATCC Tentative Test Method 30—1957T, Fungicides, Evaluation of Textiles; Mildew and Rot Resistance of Textiles, published by American Association of Textile Chemists and Colorists. After soil-burial for a period of 2 weeks, the specimen shall be washed in water, dried and conditioned as prescribed in paragraph (a) of this section. The breaking strengths of the specimens shall be determined by the procedure prescribed in paragraph (b) of this section. The median values for the breaking strengths determined on exposed and unexposed specimens shall be used to calculate the percentage of breaking strength retained.

NOTE: This test shall not be required on webbing made from material which is inherently resistant to micro-organisms.

(g) *Colorfastness to crocking.* Webbing from three seat belt assemblies shall be tested by the procedure specified in Standard Test Method 8—1961, Colorfastness to Crocking (Rubbing) published by the American Association of Textile Chemists and Colorists.

(h) *Colorfastness to staining.* Webbing from three seat belt assemblies shall be tested by the procedure specified in Standard Test Method 107—

1962, Colorfastness to Water, published by the American Association of Textile Chemists and Colorists, with the following modifications: Distilled water shall be used, perspiration tester shall be used, the drying time in paragraph 4 of procedures shall be 4 hours, and section entitled "Evaluation Method for Staining (3)" shall be used to determine colorfastness to staining on the AATCC Chart for Measuring Transference of Colors.

S5.2 *Hardware*—(a) *Corrosion resistance.* Three seat belt assemblies shall be tested by Standard Method of Salt Spray (Fog) Testing, ASTM Designation: B 117-64, published by the American Society for Testing and Materials. The period of test shall be 50 hours for all attachment hardware at or near the floor, consisting of two periods of 24 hours exposure to salt spray followed by 1 hour drying and 25 hours for all other hardware, consisting of one period of 24 hours exposure to salt spray followed by 1 hour drying. In the salt spray test chamber, the parts from the three assemblies shall be oriented differently, selecting those orientations most likely to develop corrosion on the larger areas. At the end of test, the seat belt assembly shall be washed thoroughly with water to remove the salt. After drying for at least 24 hours under standard laboratory conditions specified in S5.1(a) attachment hardware shall be examined for ferrous corrosion on significant surfaces, that is, all surfaces that can be contacted by a sphere 0.75 inch or 2 centimeters in diameter, and other hardware shall be examined for ferrous and nonferrous corrosion which may be transferred, either directly or by means of the webbing, to a person or his clothing during use of a seat belt assembly incorporating the hardware.

NOTE: When attachment and other hardware are permanently fastened, by sewing or other means, to the same piece of webbing, separate assemblies shall be used to test the two types of hardware. The test for corrosion resistance shall not be required for attachment hardware made from corrosion-resistant steel containing at least 11.5 percent chromium or for attachment hardware protected with an electrodeposited coating of nickel, or copper and nickel, as prescribed in S4.3(a). The assembly that has been used to test the corrosion resistance of the buckle shall be used to measure adjustment force, tilt-lock adjustment, and buckle latch in paragraphs (e), (f), and (g), respectively, of this section, assembly performance in S5.3 and buckle release force in paragraph (d) of this section.

(b) *Temperature resistance.* Three seat belt assemblies having plastic or nonmetallic hardware or having retractors shall be subjected to the conditions prescribed in Procedure IV of Standard Methods of Test for Resistance of Plastics to Accelerated Service Conditions published by the American Society for Testing and Materials, under designation D 756-56. The dimension and weight measurement shall be omitted. Buckles shall be unlatched and retractors shall be fully retracted during conditioning. The hardware parts after conditioning shall be used for all applicable tests in S4.3 and S4.4.

(c) *Attachment hardware.* (1) Attachment bolts used to secure the pelvic restraint of a seat belt assembly to a motor vehicle shall be tested in a manner similar to that shown in Figure 3. The load shall be applied at an angle of 45° to the axis of the bolt through attachment hardware from the seat belt assembly, or through a special fixture which simulates the loading applied by the attachment hardware. The attachment hardware or simulated fixture shall be fastened by the bolt to the anchorage shown in Figure 3, which has a standard 7/16-20 UNF-2B or ½-13 UNC-2B threaded hole in a hardened steel plate at least 0.4 inch or 1 centimeter in thickness. The bolt shall be installed with two full threads exposed from the fully seated position. The appropriate force required by S4.3(c)(1) shall be applied. A bolt from each of the three seat belt assemblies shall be tested.

(2) Attachment hardware, other than bolts, designed to receive the ends of two seat belt assemblies shall be subjected to a tensile force of 6,000 pounds or 2,720 kilograms in a manner simulating use. The hardware shall be examined for fracture after the force is released. Attachment hardware from three seat belt assemblies shall be tested.

(3) Single attachment hook for connecting webbing to any eye bolt shall be tested in the following manner: The hook shall be held rigidly so that the retainer latch or keeper, with cotter pin or other locking device in place, is in a horizontal position as shown in Figure 4. A force of 150±2 pounds or 68±1 kilograms shall be applied vertically as near as possible to the free end of the retainer latch, and the movement of the latch by this force at the point of application shall be measured. The vertical force shall be released, and a force of 150±2 pounds or 68±1 kilograms shall be applied horizontally as near as possible to the free end of the retainer latch. The movement of the latch by this force at the point of load application shall be measured. Alternatively, the hook may be held in other positions, provided the forces are applied and the movements of the latch are measured at the points indicated in Figure 4. A single attachment hook from each of the three seat belt assemblies shall be tested.

(d) *Buckle release.* (1) Three seatbelt assemblies shall be tested to determine compliance with the maximum buckle release force requirements, following the assembly test in S5.3. After subjection to the force applicable for the assembly being tested, the force shall be reduced and maintained at 150 pounds on the assembly loop of a Type 1 seatbielt assembly, 75 pounds on the components of a Type 2 seatbelt assembly, or 45 pounds on a Type 3 seatbelt assembly. The buckle release force shall be measured by applying a force on the buckle in a manner and direction typical of those which would be employed by a seatbelt occupant. For pushbutton-release buckles, the force shall be applied at least 0.125 inch from the edge of the pushbutton access opening of the buckle in a direction that produces maximum releasing effect. For lever-release buckles, the force shall be applied on the centerline of the buckle level or finger tab in a direction that produces maximum releasing effect.

(2) The area for application of release force on pushbutton actuated buckle shall be measured to the nearest 0.05 square inch or 0.3 square centimeter. The cylinder specified in S4.3(d) shall be inserted in the actuation portion of a lever released buckle for determination of compliance with the requirement. A buckle with other release actuation shall be examined for access of release by fingers.

(3) The buckle of a Type 1 or Type 2 seatbelt assembly shall be subjected to a compressive force of 400 pounds applied anywhere on a test line that is coincident with the centerline of the belt extended through the buckle or on any line that extends over the center of the release mechanism and intersects the extended centerline of the belt at an angle of 60°. The load shall be applied by using a curved cylindrical bar having a cross section diameter of 0.75 inch and a radius of curvature of 6 inches, placed with its longitudinal centerline along the test line and its center directly above the point on the buckle to which the load will be applied. The buckle shall be latched, and a tensile force of 75 pounds shall be applied to the connected webbing during the application of the compressive force. Buckles from three seatbelt assemblies shall be tested to determine compliance with paragraph S4.3(d)(3).

(e) *Adjustment force.* Three seat belt assemblies shall be tested for adjustment force on the webbing at the buckle, or other manual adjusting device normally used to adjust the size of the assembly. With no load on the anchor end, the webbing shall be drawn through the adjusting device at a rate of 20±2 inches per minute or 50±5 centimeters per minute and the maximum force shall be measured to the nearest 0.25 pound or 0.1 kilogram after the first 1 inch or 25 millimeters of webbing movement. The webbing shall be precycled 10 times prior to measurement.

(f) *Tilt-lock adjustment.* This test shall be made on buckles or other manual adjusting devices having tilt-lock adjustment normally used to adjust the size of the assembly. Three buckles or devices shall be tested. The base of the adjustment mechanism and the anchor end of the webbing shall be oriented in planes normal to each other. The webbing shall be

drawn through the adjustment mechanism in a direction to increase belt length at a rate of 20±2 inches per minute or 50±5 centimeters per minute while the plane of the base is slowly rotated in a direction to lock the webbing. Rotation shall be stopped when the webbing locks, but the pull on the webbing shall be continued until there is a resistance of at least 20 pounds or 9 kilograms. The locking angle between the anchor end of the webbing and the base of the adjustment mechanism shall be measured to the nearest degree. The webbing shall be precycled 10 times prior to measurement.

(g) *Buckle latch.* The buckles from three seat belt assemblies shall be opened fully and closed at least 10 times. Then the buckles shall be clamped or firmly held against a flat surface so to to permit normal movement of buckle parts, but with the metal mating plate (metal-to-metal buckles) or webbing and (metal-to-webbing buckles) withdrawn from the buckle. The release mechanism shall be moved 200 times through the maximum possible travel against its stop with a force of 30±3 pounds or 14±1 kilograms at a rate not to exceed 30 cycles per minute. The buckle shall be examined to determine compliance with the performance requirements of S4.3(g). A metal-to-metal buckle shall be examined to determine whether partial engagement is possible by means of any technique representative of actual use. If partial engagement is possible, the maximum force of separation when in such partial engagement shall be determined.

(h) *Nonlocking retractor.* After the retractor is cycled 10 times by full extension and retraction of the webbing, the retractor and webbing shall be suspended vertically and a force of 4 pounds or 1.8 kilograms shall be applied to extend the webbing from the retractor. The force shall be reduced to 3 pounds or 1.4 kilograms when attached to a pelvic restraint, or to 1.1 pounds or 0.5 kilogram per strap or webbing that contacts the shoulder of an occupant when retractor is attached to an upper torso restraint. The residual extension of the webbing shall be measured by manual rotation of the retractor drum or by disengaging the retraction mechanism. Measurements shall be made on three retractors. The location of the retractor attached to upper torso restraint shall be examined for visibility of reel during use of seat belt assembly in a vehicle.

NOTE: This test shall not be required on a nonlocking retractor attached to the free-end of webbing which is not subjected to any tension during restraint of an occupant by the assembly.

(i) *Automatic-locking retractor.* Three retractors shall be tested in a manner to permit the retraction force to be determined exclusive of the gravitational forces on hardware or webbing being retracted. The webbing shall be fully extended from the retractor. While the webbing is being retracted, the average force or retraction within plus or minus 2 inches or 5 centimeters of 75 percent extension (25 percent retraction) shall be determined and the webbing movement between adjacent locking segments shall be measured in the same region of extension. A seat belt assembly with automatic locking retractor in upper torso restraint shall be tested in a vehicle in a manner prescribed by the installation and usage instructions. The retraction force on the occupant of the seat belt assembly shall be determined before and after traveling for 10 minutes at a speed of 15 miles per hour or 24 kilometers per hour or more over a rough road (e.g., Belgian block road) where the occupant is subjected to displacement with respect to the vehicle in both horizontal and vertical directions. Measurements shall be made with the vehicle stopped and the occupant in the normal seated position.

(j) *Emergency-locking retractor.* A retractor shall be tested in a manner that permits the retraction force to be determined exclusive of the gravitational forces on hardware or webbing being retracted. The webbing shall be fully extended from the retractor, passing over or through any hardware or other material specified in the installation instructions. While the webbing is being retracted, the lowest force of retraction within plus or minus 2 inches of 75 percent extension

shall be determined. A retractor that is sensitive to webbing withdrawal shall be subjected to an acceleration of 0.3g within a period of 50 ms. while the webbing is at 75 percent extension, to determine compliance with S4.3(j)(2). The retractor shall be subjected to an acceleration of 0.7g. within a period of 50 milliseconds, while the webbing is at 75 percent extension, and the webbing movement before locking shall be measured under the following conditions: For a retractor sensitive to webbing withdrawal, the retractor shall be accelerated in the direction of webbing retraction while the retractor drum's central axis is oriented horizontally and at angles of 45°, 90°, 135°, and 180° to the horizontal plane. For a retractor sensitive to vehicle acceleration, the retractor shall be—

(1) Accelerated in the horizontal plane in two directions normal to each other, while the retractor drum's central axis is oriented at the angle at which it is installed in the vehicle; and,

(2) Accelerated in three directions normal to each other while the retractor drum's central axis is oriented at angles of 45°, 90°, 135°, and 180° from the angle at which it is installed in the vehicle, unless the retractor locks by gravitational force when tilted in any direction to any angle greater than 45° from the angle at which it is installed in the vehicle.

(k) *Performance of retractor.* After completion of the corrosion-resistance test described in paragraph (a) of this section, the webbing shall be fully extended and allowed to dry for at least 24 hours under standard laboratory conditions specified in S5.1(a). The retractor shall be examined for ferrous and nonferrous corrosion which may be transferred, either directly or by means of the webbing, to a person or his clothing during use of a seat belt assembly incorporating the retractor, and for ferrous corrosion on significant surfaces if the retractor is part of the attachment hardware. The webbing shall be withdrawn manually and allowed to retract for 25 cycles. The retractor shall be mounted in an apparatus capable of extending the webbing fully, applying a force of 20 pounds or 9 kilograms at full webbing extension, and allowing the webbing to retract freely and completely. The webbing shall be withdrawn from the retractor and allowed to retract repeatedly in this apparatus until 2,500 cycles are completed. The retractor and webbing shall then be subjected to the temperature resistance test prescribed in paragraph (b) of this section. The retractor shall be subjected to 2,500 additional cycles of webbing withdrawal and retraction. Then, the retractor and webbing shall be subjected to dust in a chamber similar to one illustrated in Figure 8 containing about 2 pounds or 0.9 kilogram of coarse grade dust conforming to the specification given in SAE Recommended Practice, Air Cleaner Test Code—SAE J726a, published by the Society of Automotive Engineers. The dust shall be agitated every 20 minutes for 5 seconds by compressed air, free of oil and moisture, at a gage pressure of 80±8 pounds per square inch or 5.6±0.6 kilograms per square centimeter entering through an orifice 0.060±0.004 inch or 1.5±0.1 millimeters in diameter. The webbing shall be extended to the top of the chamber and kept extended at all times except that the webbing shall be subjected to 10 cycles of complete retraction and extension within 1 to 2 minutes after each agitation of the dust. At the end of 5 hours, the assembly shall be removed from the chamber. The webbing shall be fully withdrawn from the retractor manually and allowed to retract completely for 25 cycles. An automatic-locking retractor or a nonlocking retractor attached to pelvic restraint shall be subjected to 5,000 additional cycles of webbing withdawal and retraction. An emergency-locking retractor or a nonlocking retractor attached to upper torso restraint shall be subjected to 45,000 additional cycles of webbing withdrawal and retraction between 50 and 100 percent extension. The locking mechanism of an emergency locking retractor shall be actuated at least 10,000 times within 50 to 100 percent extension of webbing during the 50,000 cycles. At the end of test, compliance of the retractors with applicable requirements in S4.3 (h), (i), and (j), shall be deter-

mined. Three retractors shall be tested for performance.

S5.3 *Assembly Performance*—(a) *Type 1 seat belt assembly.* Three complete seat belt assemblies, including webbing, straps, buckles, adjustment and attachment hardware, and retractors, arranged in the form of a loop as shown in Figure 5, shall be tested in the following manner:

(1) The testing machine shall conform to the requirements specified in S5.1(b). A double-roller block shall be attached to one head of the testing machine. This block shall consist of two rollers 4 inches or 10 centimeters in diameter and sufficiently long so that no part of the seat belt assembly touches parts of the block other than the rollers during test. The rollers shall be mounted on antifriction bearings and spaced 12 inches or 30 centimeters between centers, and shall have sufficient capacity so that there is no brinelling, bending or other distortion of parts which may affect the results. An anchorage bar shall be fastened to the other head of the testing machine.

(2) The attachment hardware furnished with the seat belt assembly shall be attached to the anchorage bar. The anchor points shall be spaced so that the webbing is parallel in the two sides of the loop. The attaching bolts shall be parallel to, or at an angle of 45° or 90° to the webbing, whichever results in an angle nearest to 90° between webbing and attachment hardware except that eye bolts shall be vertical, and attaching bolts or nonthreaded anchorages of a seat belt assembly designed for use in specific models of motor vehicles shall be installed to produce the maximum angle in use indicated by the installation instructions, utilizing special fixtures if necessary to simulate installation in the motor vehicle. Rigid adapters between anchorage bar and attachment hardware shall be used if necessary to locate and orient the adjustment hardware. The adapters shall have a flat support face perpendicular to the threaded hole for the attaching bolt and adequate in area to provide full support for the base of the attachment hardware connected to the webbing. If necessary, a washer shall be used under a swivel plate or other attachment hardware to prevent the webbing from being damaged as the attaching bolt is tightened.

(3) The length of the assembly loop from attaching bolt to attaching bolt shall be adjusted to about 51 inches or 130 centimeters, or as near thereto as possible. A force of 55 pounds or 25 kilograms shall be applied to the loop to remove any slack in webbing at hardware. The force shall be removed and the heads of the testing machine shall be adjusted for an assembly loop between 48 and 50 inches or 122 and 127 centimeters in length. The length of the assembly loop shall then be adjusted by applying a force between 20 and 22 pounds or 9 and 10 kilograms to the free end of the webbing at the buckle, or by the retraction force of an automatic-locking or emergency-locking retractor. A seat belt assembly that cannot be adjusted to this length shall be adjusted as closely as possible. An automatic-locking or emergency-locking retractor when included in a seat belt assembly shall be locked at the start of the test with a tension on the webbing slightly in excess of the retractive force in order to keep the retractor locked. The buckle shall be in a location so that it does not touch the rollers during test, but to facilitate making the buckle release test in S5.2(d) the buckle should be between the rollers or near a roller in one leg.

(4) The heads of the testing machine shall be separated at a rate between 2 and 4 inches per minute or 5 and 10 centimeters per minute until a force of 5,000±50 pounds or 2,270±20 kilograms is applied to the assembly loop. The extension of the loop shall be determined from measurements of head separation before and after the force is applied. The force shall be decreased to 150±10 pounds or 68±4 kilograms and the buckle release force measured as prescribed in S5.2(d).

(5) After the buckle is released, the webbing shall be examined for cutting by the hardware. If the yarns are partially or completely severed in a line for a distance of 10 percent or more of the webbing width, the cut webbing shall be tested for breaking strength as specified in S5.1(b) locating the cut in the free length between grips. If

there is insufficient webbing on either side of the cut to make such a test for breaking strength, another seat belt assembly shall be used with the webbing repositioned in the hardware. A tensile force of 2,500±25 pounds or 1,135±10 kilograms shall be applied to the components or a force of 5,000±50 pounds or 2,270±20 kilograms shall be applied to an assembly loop. After the force is removed, the breaking strength of the cut webbing shall be determined as prescribed above.

(6) If a Type 1 seat belt assembly includes an automatic-locking retractor or an emergency-locking retractor, the webbing and retractor shall be subjected to a tensile force of 2,500±25 pounds or 1,135±10 kilograms with the webbing fully extended from the retractor.

(7) If a seat belt assembly has a buckle in which the tongue is capable of inverted insertion, one of the three assemblies shall be tested with the tongue inverted.

(b) *Type 2 seat belt assembly.* Components of three seat belt assemblies shall be tested in the following manner:

(1) The pelvic restraint between anchorages shall be adjusted to a length between 48 and 50 inches or 122 and 127 centimeters, or as near this length as possible if the design of the pelvic restraint does not permit its adjustment to this length. An automatic-locking or emergency-locking retractor when included in a seat belt assembly shall be locked at the start of the test with a tension on the webbing slightly in excess of the retractive force in order to keep the retractor locked. The attachment hardware shall be oriented to the webbing as specified in paragraph (a)(2) of this section and illustrated in Figure 5. A tensile force of 2,500±25 pounds or 1,135±10 kilograms shall be applied on the components in any convenient manner and the extension between anchorages under this force shall be measured. The force shall be reduced to 75±5 pounds or 34±2 kilograms and the buckle release force measured as prescribed in S5.2(d).

(2) The components of the upper torso restraint shall be subjected to a tensile force of 1,500±15 pounds or 680±5 kilograms following the procedure prescribed above for testing pelvic restraint and the extension between anchorages under this force shall be measured. If the testing apparatus permits, the pelvic and upper torso restraints may be tested simultaneously. The force shall be reduced to 75±5 pounds or 34±2 kilograms and the buckle release force measured as prescribed in S5.2(d).

(3) Any component of the seat belt assembly common to both pelvic and upper torso restraint shall be subjected to a tensile force of 3,000±30 pounds or 1,360±15 kilograms.

(4) After the buckle is released in tests of pelvic and upper torso restraints, the webbing shall be examined for cutting by the hardware. If the yarns are partially or completely severed in a line for a distance of 10 percent or more of the webbing width, the cut webbing shall be tested for breaking strength as specified in S5.1(b) locating the cut in the free length between grips. If there is insufficient webbing on either side of the cut to make such a test for breaking strength, another seat belt assembly shall be used with the webbing repositioned in the hardware. The force applied shall be 2,500±25 pounds or 1,135±10 kilograms for components of pelvic restraint, and 1,500±15 pounds or 680±5 kilograms for components of upper torso restraint. After the force is removed, the breaking strength of the cut webbing shall be determined as prescribed above.

(5) If a Type 2 seat belt assembly includes an automatic-locking retractor or an emergency-locking retractor, the webbing and retractor shall be subjected to a tensile force of 2,500±25 pounds or 1,135±10 kilograms with the webbing fully extended from the retractor, or to a tensile force of 1,500±15 pounds or 680±5 kilograms with the webbing fully extended from the retractor if the design of the assembly permits only upper torso restraint forces on the retractor.

(6) If a seat belt assembly has a buckle in which the tongue is capable of inverted insertion, one of the three assemblies shall be tested with the tongue inverted.

(c) *Type 3 seat belt assembly.* Three seat belt assemblies including webbing, straps, buckles, adjustment and attachment hardware, and retractors shall be tested in the following manner:

(1) The testing machine shall conform to the requirements specified in S5.1(b). A torso having the dimensions shown in Figure 6, configured so that it does not contact a buckle in such a way as to affect the buckle release force, shall be attached to one head of the testing machine through a universal joint which is guided in essentially a frictionless manner to minimize lateral forces on the testing machine. An anchorage and simulated seat back shall be attached to the other head as shown in Figure 7.

(2) Attachment hardware for an assembly having single webbing connection shall be fastened at the anchor hole shown in Figure 7 which is centered along the length of the anchorage bar. Attachment hardware for an assembly having two webbing connectors shall be fastened at anchor holes 16 inches or 40 centimeters apart on the anchorage bar, equidistant from the center. Attachment hardware for an assembly whose design precludes such attachment shall be fastened in accordance with the installation instructions. The back of the torso shall be positioned in a plane parallel to and at a distance of 4 inches or 10 centimeters from the plane of the simulated seat back. The seat belt assembly shall be installed on the torso in accordance with installation instructions and the webbing to the attachment hardware shall be adjusted with effectively no slack. The heads of the testing machine shall be separated at a rate of between 2 and 4 inches per minute or 5 and 10 centimeters per minute until a force of 2,000 pounds or 900 kilograms is applied. The extension of the seat belt assembly shall be determined from measurement of head separation in the testing machine before and after the force is applied. The force shall be reduced to 45±5 pounds or 20±2 kilograms and the release force of the buckle or buckles measured as prescribed in S5.2(d). A seat back retainer not connected to pelvic or upper torso restraint shall be subjected separately to a force of 2,000 pounds or 900 kilograms.

(3) After the buckle is released, the webbing shall be examined for cutting by the hardware. If the yarns are partially or completely severed in a line for a distance of 10 percent or more of the webbing width, the cut webbing shall be tested for breaking strength as specified in S5.1(b) locating the cut in the free length between grips. If there is insufficient webbing on either side of the cut to make such a test for breaking strength, another seat belt assembly shall be used with the webbing repositioned in the hardware. A tensile force shall be applied to the components as follows: Webbing in pelvic or upper torso restraint—700±7 pounds or 320±3 kilograms; webbing in seat back retainer or webbing connecting pelvic and upper torso restraint to attachment hardware—1,500±15 pounds or 680±7 kilograms. After the force is removed, the breaking strength of the cut webbing shall be determined as prescribed above.

(4) If a seat belt assembly has a buckle in which the tongue is capable of inverted insertion, one of the three assemblies shall be tested with the tongue inverted.

(d) *Resistance to buckle abrasion.* Seatbelt assemblies shall be tested for resistance to abrasion by each buckle or manual adjusting device normally used to adjust the size of the assembly. The webbing of the assembly to be used in this test shall be exposed for 4 hours to an atmosphere having relative humidity of 65 percent and temperature of 70° F. The webbing shall be pulled back and forth through the buckle or manual adjusting device as shown schematically in Figure 9. The anchor end of the webbing (A) shall be attached to a weight (B) of 3 pounds. The webbing shall pass through the buckle (C), and the other end (D) shall be attached to a reciprocating device so that the webbing forms an angle of 8° with the hinge stop (E). The reciprocating device shall be operated for 2,500 cycles at a rate of 18 cycles per minute with a

stroke length of 8 inches. The abraded webbing shall be tested for breaking strength by the procedure described in paragraph S5.1(b).

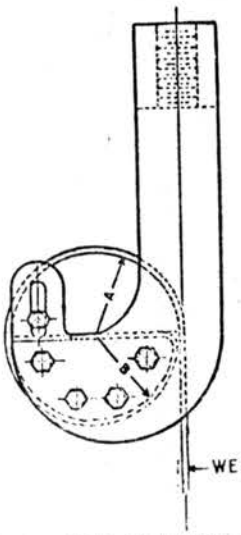

A—1 TO 2 INCHES OR 2.5 TO 5 CENTIMETERS
B—A MINUS 0.06 INCH OR 0.15 CENTIMETER

FIGURE 1

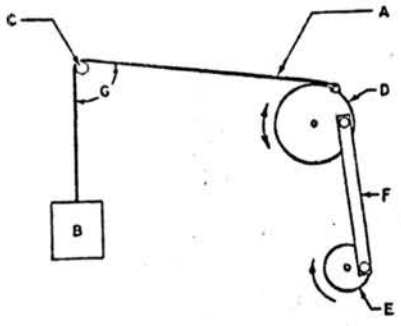

A—WEBBING
B—WEIGHT
C—HEXAGONAL ROD
STEEL—SAE 51416
ROCKWELL HARDNESS—B-97 TO B-101
SURFACE—COLD DRAWN FINISH
SIZE—0.250 ± 0.001 INCH OR
6.35 ± 0.03 MILLIMETER
RADIUS ON EDGES—0.020 ± 0.004 INCH OR
0.5 ± 0.1 MILLIMETER
D—DRUM DIAMETER—16 INCHES OR
40 CENTIMETERS
E—CRANK
F—CRANK ARM
G—ANGLE BETWEEN WEBBING—85 ± 2 DEGS.

FIGURE 2

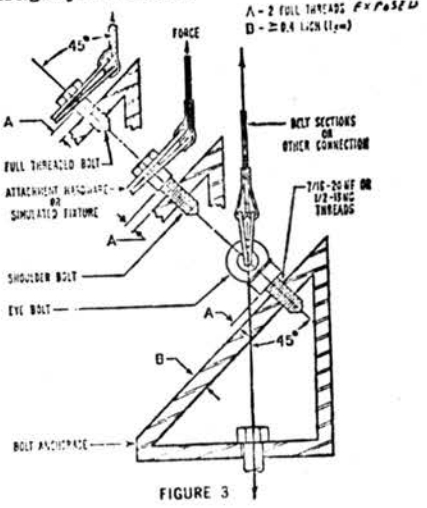

FIGURE 3

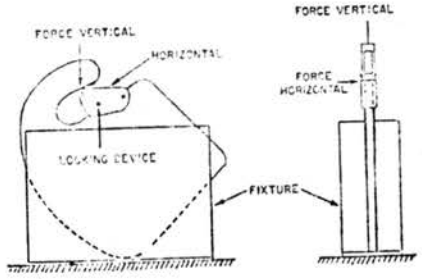

FIGURE 4
SINGLE ATTACHMENT HOOK

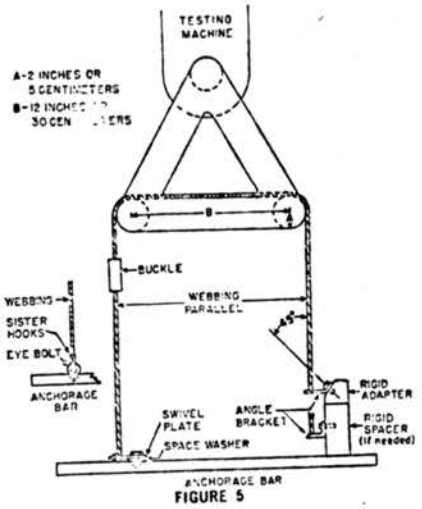

FIGURE 5

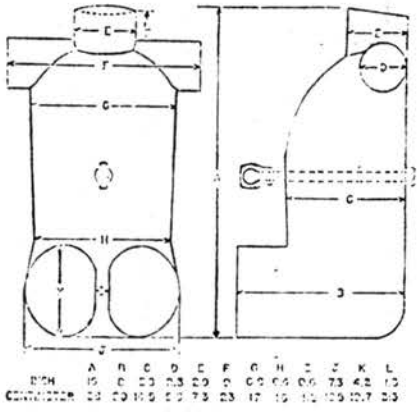

	A	B	C	D	E	F	G	H	J	K	L
INCH	15	6	2.0	0.8	2.0	0	0.0	0.6	0.6	7.3	4.8	1.0
CENTIMETER	38	0.9	10.0	2.0	7.3	2.3	1.7	1.5	1.5	18.9	12.7	2.5

FIGURE 6

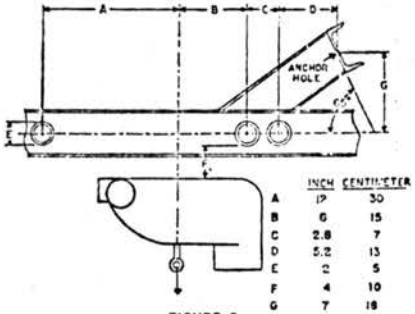

	INCH	CENTIMETER
A	12	30
B	6	15
C	2.8	7
D	5.2	13
E	2	5
F	4	10
G	7	18

FIGURE 7

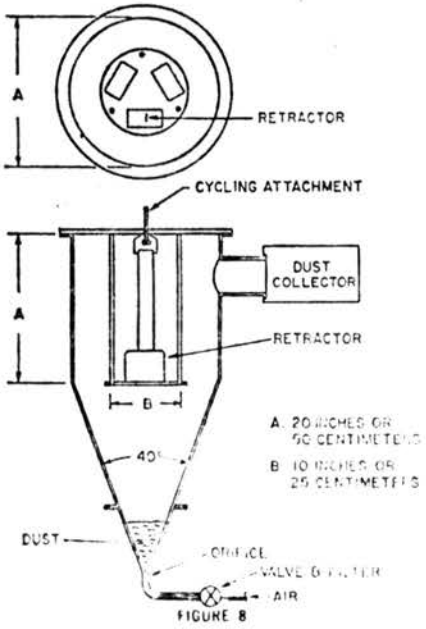

FIGURE 8

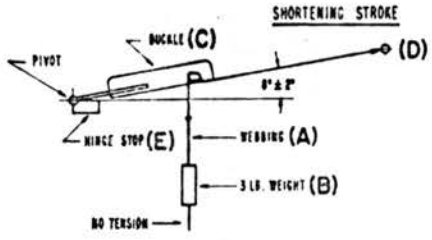

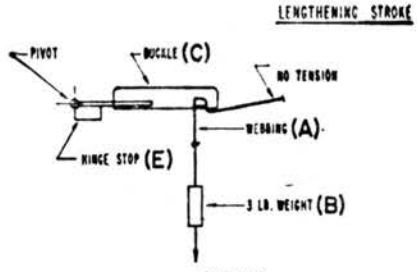

FIGURE 9

[36 FR 22902, Dec. 2, 1971, as amended at 38 FR 22959, Aug. 28, 1973; 39 2771, Jan. 24, 1974]

§ 571.210 Standard No. 210; Seat belt assembly anchorages.

S1. *Purpose and scope.* This standard establishes requirements for seat belt assembly anchorages to insure their proper location for effective occupant restraint and to reduce the likelihood of their failure.

S2. *Application.* This standard applies to passenger cars, multipurpose passenger vehicles, trucks, and buses.

S3. *Definition.* "Seat belt anchorage" means the provision for transferring seat belt assembly loads to the vehicle structure.

S4. *Requirements.*

S4.1 *Type.*

S4.1.1 Seat belt anchorages for a Type 2 seat belt assembly shall be installed for each forward-facing outboard designated seating position in passenger cars other than convertibles, and for each designated seating position for which a Type 2 seat belt

DPS # 12

5 Steel Fasteners

MECHANICAL AND MATERIAL REQUIREMENTS FOR EXTERNALLY THREADED FASTENERS—SAE J429j

SAE Standard

Report of Iron and Steel Technical Committee approved January 1949 and last revised July 1977.

1. Scope—This SAE Standard covers the mechanical and material requirements for steel bolts, screws, studs, sems,[1] and U-bolts[2] used in automotive and related industries in sizes to 1½ in, inclusive.

[1]Sems: Screw and washer assemblies.

[2]U-bolts covered by this SAE Standard are those used primarily in the suspension and related areas of vehicles. For specification purposes, this standard treats U-bolts as studs. Thus, wherever the word "studs" appears, "U-bolts" is also implied. (Designers should recognize that the "U" configuration may not sustain a load equivalent to two bolts or studs of the same size and grade; thus, actual load carrying capacity of U-bolts should be determined by saddle load tests.)

NOTE: Previous issues of this standard also covered nuts, now covered separately in SAE J995 (August, 1967).

2. Designations

2.1 Designation System—Grades are designated by numbers where increasing numbers represent increasing tensile strength, and by decimals of whole numbers where decimals represent variations at the same strength level. The grade designations are given in Table 1.

2.2 Grades—Bolts and screws are normally available only in Grades 1, 2, 5, 5.2, 7, 8, and 8.2. Studs are normally available only in Grades 1, 2, 4, 5, 8, and 8.1. Grade 5.1 is applicable to sems which are heat treated following

TABLE 1—MECHANICAL REQUIREMENTS AND IDENTIFICATION MARKING FOR BOLTS, SCREWS, STUDS, SEMS, AND U-BOLTS[j]

Grade Designation	Products	Nominal Size Dia, in	Full Size Bolts, Screws, Studs, Sems		Machine Test Specimens of Bolts, Screws, and Studs				Surface Hardness	Core Hardness		Grade Identification Marking[i]
			Proof Load (Stress), psi	Tensile Strength (Stress) Min, psi	Yield[a] Strength (Stress) Min, psi	Tensile Strength (Stress) Min, psi	Elongation[f] Min, %	Reduction of Area Min, %	Rockwell 30N Max	Rockwell Min	Rockwell Max	
1	Bolts, Screws, Studs	1/4 thru 1-1/2	33,000	60,000	36,000[b]	60,000	18	35	—	B70	B100	None
2	Bolts, Screws, Studs	1/4 thru 3/4[c]	55,000	74,000	57,000	74,000	18	35	—	B80	B100	
		Over 3/4 to 1-1/2	33,000	60,000	36,000[b]	60,000	18	35	—	B70	B100	None
4	Studs	1/4 thru 1-1/2	65,000	115,000	100,000	115,000	10	35	—	C22	C32	None
5	Bolts, Screws, Studs	1/4 thru 1	85,000	120,000	92,000	120,000	14	35	54	C25	C34	
		Over 1 to 1-1/2	74,000	105,000	81,000	105,000	14	35	50	C19	C30	
5.1[d]	Sems[b] Bolts Screws	No. 6 thru 5/8	85,000	120,000	—	—	—	—	59.5[g]	C25	C40[g]	
		No. 6 thru 1/2										
5.2	Bolts Screws	1/4 thru 1	85,000	120,000	92,000	120,000	14	35	56	C26	C36	
7[e]	Bolts Screws	1/4 thru 1-1/2	105,000	133,000	115,000	133,000	12	35	54	C28	C34	
8	Bolts, Screws, Studs	1/4 thru 1-1/2	120,000	150,000	130,000	150,000	12	35	58.6	C33	C39	
8.1	Studs	1/4 thru 1-1/2	120,000	150,000	130,000	150,000	10	35	—	C32	C38	None
8.2	Bolts Screws	1/4 thru 1	120,000	150,000	130,000	150,000	10	35	61	C35	C42	

[a]Yield strength is stress at which a permanent set of 0.2% of gage length occurs.
[b]Proof load shall apply instead of yield strength at 0.2% offset.
[c]Grade 2 requirements for sizes 1/4 through 3/4 in apply only to bolts and screws 6 in and shorter in length, and to studs of all lengths. For bolts and screws longer than 6 in, Grade 1 requirements shall apply.
[d]Grade 5 material heat treated before assembly with a hardened washer is an acceptable substitute.
[e]Grade 7 bolts and screws are roll threaded after heat treatment.
[f]See Table 6 for gage length.
[g]Hex washer head and hex flange products without assembled washers shall have a core hardness not exceeding Rockwell C38 and a surface hardness not exceeding Rockwell 30N 57.5. Slotted and similar products without washers.
[h]See footnote 2 of text.
[i]Not applicable to studs or slotted and cross recess head products.

assembly of the washer on the screw, and to products without assembled washer.

3. Materials and Processes

3.1 Steel Characteristics—Bolts, screws, studs, and sems shall be made of steel conforming to the description and chemical composition requirements specified in Table 2 for the applicable grade.

3.2 Heading Practice—Methods other than upsetting and/or extrusion are permitted only by special agreement between purchaser and supplier.

Grade 1 bolts and screws may be hot or cold headed, at option of the manufacturer.

Grades 2, 5, 5.2, 7, 8, and 8.2 bolts and screws in sizes up to 3/4 in, inclusive, and in lengths up to 6 in, inclusive, shall be cold headed, except that by special agreement they may be hot headed. Larger sizes and longer lengths may be hot or cold headed, at option of the manufacturer.

Grade 5.1 bolts, screws, and sems shall be cold headed.

3.3 Threading Practice—Grades 2, 5, 5.2, 8, and 8.2 bolts and screws in sizes up to 3/4 in, inclusive, and lengths up to 6 in, inclusive, shall be roll threaded, except by special agreement. Grade 7 bolts and screws shall be roll threaded after heat treatment. Grade 5.1 bolts, screws, and sems shall be roll threaded. Threads of all sizes of Grade 1 bolts and screws, and Grades 2, 5, 5.2, 8, and 8.2 bolts and screws in sizes over 3/4 in and/or lengths longer than 6 in, may be rolled, cut, or ground, at option of the manufacturer. Threads of all grades and sizes of studs may be rolled, cut, or ground, at option of the manufacturer.

3.4 Heat Treatment Practice—Grade 1 bolts and screws and Grades 1 and 2 studs need not be heat treated. When specified by purchaser, Grade 2 cold headed bolts and screws shall be stress relieved at a minimum stress relief temperature of 875°F (468°C). Grades 4 and 8.1 studs are manufactured from pretreated material and the studs, as manufactured, need no further heat treatment. Grades 5 and 5.2 bolts, screws, and studs shall be heat treated, oil or water quenched, at option of manufacturer, and tempered at a minimum tempering temperature of 800°F (427°C). Grade 5.1 bolts, screws, and sems shall be heat treated, quenched, and tempered at a minimum tempering temperature of 650°F (343°C). For Grade 5.1 sems, quenchants whose principal constituent is water shall not be used, unless specifically approved by the user. Grades 7 and 8 bolts and screws and Grade 8 studs shall be heat treated, oil quenched, and tempered at a minimum tempering temperature of 800°F (427°C). Grade 8.2 bolts and screws shall be fully austenitized, quenched in oil or water, and tempered at a minimum temperature of 650°F (343°C).

3.5 Decarburization—Unless otherwise specified, Grades 5, 5.1, 5.2, 7, 8, and 8.2 bolts, screws, and studs shall conform to Class C unless Class A is specified as described in SAE J121 (September, 1969).

3.6 Surface Discontinuities—Grades 5, 5.1, 5.2, 7, 8, 8.1, and 8.2 bolts, screws, and studs in sizes up to 1 in inclusive, and lengths up to 6 in inclusive, shall be in conformity with the requirements of SAE J1061 (September, 1969).

When the engineering requirements of the application necessitate that surface discontinuities of bolts, screws, and studs should be more closely controlled, the purchaser shall specify the applicable limits in the original inquiry and purchase order. For certain fasteners, this may be done by reference to SAE J123 (September, 1973).

4. Mechanical Requirements—Bolts, screws, studs, and sems shall be tested in accordance with the mechanical testing requirements for the applicable type, grade, size, and length of product as specified in Table 3, and shall meet the mechanical requirements specified for that product in Table 1.

In the case of U-bolts having thread length equal to 3D or longer, obtain stud-like specimens from either leg of the "U" (utilizing the maximum available thread length) and test as shown for studs. Where thread length is less than 3D, test for hardness only as shown for "short studs." (Applicable mechanical tests are shown in Table 3 and requirements in Table 1.)

5. Methods of Test

5.1 Hardness—The hardness of bolts, screws, studs, and sems shall be determined at mid-radius of a transverse section through the threaded portion of the product taken at a distance of one diameter from the end of the product. The reported hardness shall be the average of four hardness readings located at 90 deg to one another. The preparation of test specimens and the performance of hardness tests shall be in conformity with the requirements of SAE J417 (January, 1946).

To meet the requirements of paragraph 4, the hardness shall not exceed the maximum hardness specified in Table 1 for the applicable grade. In addition, as required in paragraph 4 and Table 3, the hardness shall be not less than the minimum hardness specified in Table 1 for the applicable grade.

5.2 Surface Hardness—Tests to determine surface hardness conditions shall be conducted on the ends, hexagon flats, or unthreaded shanks which have been prepared by lightly grinding or polishing to insure accurate reproducible readings in accordance with SAE J417 (January, 1946). Proper conversion factors shall be used when hardness tests are made on curved surfaces per ASTM E 18.

Depending on the location and individual surface upon which the test is conducted, some increase in hardness above that specified in Table 1, when measured on the Rockwell 30N scale, may occur for reasons other than carburization. To insure that lots of products not considered acceptable because this cause are in fact carburized, the metallographic and hardness checking technique described in SAE J121 (September, 1969) shall be used.

In applying the J121 (September, 1969) procedure, a difference between Knoop and Rockwell 30N readings by conversion may occur. This difference is disregarded since the primary purpose of the Knoop traverse in J121 (September, 1969) is to establish the existence of carburization.

5.3 Proof Load—The proof load test consists of stressing the bolt, screw, stud, or sem with a specified load which the product must withstand without permanent set.

The overall length of the specimen shall be measured between conical ball centers on the centerline of the specimen, using mating centers on the measuring anvils. The specimen shall be marked so that it can be placed in the measuring fixture in the same position for all measurements. The measurement instrument shall be capable of measurement to 0.0001 in. In the case of sems, the washer may be removed from the screw prior to assembly in the testing machine; however, for referee testing, the washer shall be removed. For bolts, screws, and sems, 3D or longer, the specimen shall be assembled in the fixture of the tensile machine so that six complete threads are exposed between the grips. This is obtained by freely running the nut or fixture to the thread runout of the specimen and then unscrewing the specimen six full turns. Short bolts, 2 1/4-3D in length, threaded to within 2 1/2 pitches of the bearing surface shall be assembled finger tight in the fixture and unscrewed two full turns. When proof load testing studs, one end of the stud shall be assembled in a threaded fixture to the thread runout. For studs having unequal threads, this shall be the end with the finer pitch thread. The other end of the stud shall likewise be assembled in a threaded fixture, as above for bolts. The bolt, screw, stud, or sem shall then be axially loaded to the proof load specified for the applicable size, thread series, and grade in Table 5, the load retained for a period of 10 s, the load removed, and the overall length again measured.

TABLE 2—CHEMICAL COMPOSITION REQUIREMENTS[a]

Grade	Material and Treatment	Element, %					
		C		Mn	P	S	B
		Min	Max	Min	Max	Max	Min
1	Low or medium carbon steel	—	0.55	—	0.048	0.058	—
2	Low or medium carbon steel	—	0.55	—	0.048	0.058[b]	—
4	Medium carbon cold drawn steel	—	0.55	—	0.048	0.058	—
5	Medium carbon steel, quenched and tempered	0.28	0.55	—	0.048	0.058[c]	—
5.1	Low or medium carbon steel, quenched and tempered[e]	0.15	0.30	—	0.048	0.058	—
5.2	Low carbon martensite steel, fully killed, fine grain, quenched and tempered	0.15	0.25	0.74	0.048	0.058	0.0005
7	Medium carbon alloy steel, quenched and tempered[d]	0.28	0.55	—	0.040	0.045	—
8	Medium carbon alloy steel, quenched and tempered[d]	0.28	0.55	—	0.040	0.045	—
8.1	Elevated temperature drawn steel—medium carbon alloy or SAE 1541 (formerly SAE 1041)	0.28	0.55	—	0.048	0.058	—
8.2	Low carbon martensite steel, fully killed, fine grain, quenched and tempered[f]	0.15	0.25	0.74	0.048	0.058	0.0005

[a] All values are for product analysis (percent by weight). For cast or heat analysis, use standard permissible variations as shown in SAE J409 (January, 1942).

[b] For studs only, sulfur content may be 0.33% max.

[c] For studs only, sulfur content may be 0.13% max.

[d] Steel shall be fine grain, with hardenability that will produce a minimum hardness of Rockwell C47 at the center of a transverse section one diameter from the threaded end of the bolt, screw, or stud after oil quenching (see SAE J407 (August, 1947)). Carbon steel may be used by agreement between producer and consumer, for sizes 1/4–3/4 in diameter products. SAE 1541 (1041) steel, oil quenched and tempered, may be used at the option of the producer for products 7/16 in nominal diameter and smaller.

[e] For sems only, sizes 7/16–5/8 in diameter, low carbon martensite steel (as specified for Grade 5.2) may be used.

[f] Steel with hardenability that will produce a minimum hardness of Rockwell C38 at the center of a transverse section one diameter from the threaded end of the bolt or screw after quenching.

TABLE 3—MECHANICAL TESTING REQUIREMENTS FOR BOLTS, SCREWS, STUDS, AND SEMS

Product	Grade	Specified Min Tensile Strength of Product, lb	Length of Product	Hardness[a]		Tests Conducted Using Full Size Products[a]			Tests Conducted Using Machine Test Specimens[a]			
				Max	Min	Proof Load	Wedge Tensile Strength	Axial Tensile Strength	Yield Strength	Axial Tensile Strength	Elongation	Reduction of Area
Short Bolts and Screws	1, 2, 5, 5.2, 7, 8, 8.2	All	Less than 2-1/4D[b]	•	•	—	—	—	—	—	—	—
Special Head Bolts and Screws	1, 2, 5, 5.2, 7, 8, 8.2	All	All	•	•	—	—	—	—	—	—	—
Square and Hex Bolts and Screws	1, 2, 5, 5.2, 7, 8, 8.2	100,000 and less	2-1/4D to 8D or 8 in, whichever is greater	•	—	•	•	—	—	—	—	—
			Over 8D or 8 in, whichever is greater, thru and including 12 in	•	—	Option A	•	—	Option B	Option B	Option B	Option B
			Over 12 in	•	—	Option A	Option A	—	Option B	Option B	Option B	Option B
		Over 100,000	2-1/4D and longer	•	—	Option A	Option A	—	Option B	Option B	Option B	Option B
All Other Bolts and Screws	1, 2, 5, 5.2, 7, 8, 8.2	100,000 and less	2-1/4 to 8D or 8 in, whichever is greater	•	—	•	—	•	—	—	—	—
			Over 8D or 8 in, whichever is greater	•	—	Option A	—	Option A	Option B	Option B	Option B	Option B
		Over 100,000	2-1/4D and longer	•	—	Option A	—	Option A	Option B	Option B	Option B	Option B
Short Studs	1, 2, 4, 5, 8, 8.1	All	Less than 3D	•	•	—	—	—	—	—	—	—
All Other Studs	1, 2, 4, 5, 8, 8.1	100,000 and less	3D to 8D or 8 in, whichever is greater	•	—	•	•	—	—	—	—	—
			Over 8D or 8 in, whichever is greater	•	—	Option A	Option A	—	Option B	Option B	Option B	Option B
		Over 100,000	3D and longer	•	—	Option A	Option A	—	Option B	Option B	Option B	Option B
Short Bolts, Screws, and Sems	5.1	All	Less than 2-1/4D	•	•	—	—	—	—	—	—	—
Hex Head Bolts, Screws, and Sems	5.1	All	2-1/4D and longer	•	—	•	•	—	—	—	—	—
Other Bolts, Screws, and Sems	5.1	All	2-1/4D and longer	•	—	•	—	•	—	—	—	—
Tests to be performed in accordance with paragraph				5.1		5.3	5.5	5.4	5.6			

[a] Asterisks (*) denote mandatory tests. Where options are indicated, all Option A tests (which apply to full size products) or all Option B tests (which apply to machined specimens) shall be performed. Option A tests shall be performed in case arbitration is necessary. Dashes (—) denote tests which are not required.

[b] D equals nominal diameter of the product.

[c] Special head bolts and screws are those with special configurations or with drilled heads which are weaker than the threaded section.

[d] For purposes of Table 3 requirements, "length of product" is the nominal length including point chamfer as defined in SAE J105 (June, 1911), and all special point products shall be measured from the bearing surface to the crest of the last complete thread form.

The speed of testing, as determined with a free running cross head, shall not exceed 0.12 in/min.

To meet the requirements of paragraph 4, the length of the bolt, screw, stud, or sem after loading shall be the same as before loading within a tolerance of ±0.0005 in allowed for measurement error.

Variables, such as straightness and thread alignment (plus measurement error), may result in apparent elongation of the fasteners when the proof load is initially applied. In such cases, the fastener may be retested using a 3% greater load, and may be considered satisfactory if the length after this loading is the same as before this loading (within the 0.0005 in tolerance for measurement error).

5.4 Axial Tensile Strength—Following proof load testing, the same bolt, screw, stud, or sem shall be reassembled in the testing machine per paragraph 5.3 and axial loading applied until failure. Typical fixturing is illustrated in Fig. 1. The speed of testing, as determined with a free running cross head, shall not exceed 1 in/min.

To meet the requirements of paragraph 4, the bolt, screw, stud, or sems shall not fracture before having withstood the minimum tensile load specified for the applicable size, thread series, and grade in Table 5. In addition, for bolts, screws, and sems with regular style heads, the ultimate failure location shall occur in the body or threaded section and not at the junction of the head and shank. (See footnote c under Table 3.)

5.5 Wedge Tensile Strength

5.5.1 BOLTS AND SCREWS—Following proof load testing, the same bolt or screw shall be assembled with a wedge inserted under the head, as illustrated in Fig. 2, installed in the testing machine and tensile tested to failure, as described in paragraph 5.3. The angle of the wedge for the bolt or screw size and grade is specified in Table 4. The wedge shall be so placed that no corner of the square or hexagon bolt or screw head takes the bearing load; that is, a flat of the head shall be aligned with the direction of uniform thickness of the wedge. The wedge shall have a thickness of one-half the bolt or screw diameter measured at the thin side of the hole. The hole in the wedge shall have the following clearance over the nominal size of the bolt or screw, and its top

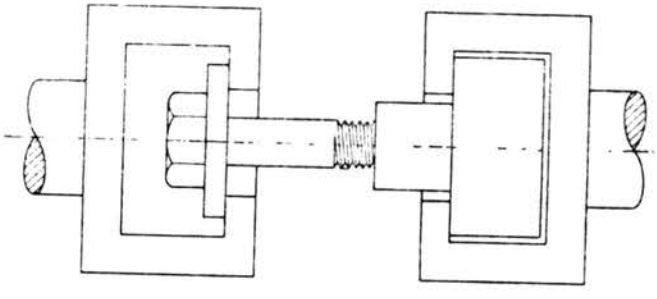

FIG. 1—TENSILE TESTING OF FULL SIZE BOLT OR SCREW

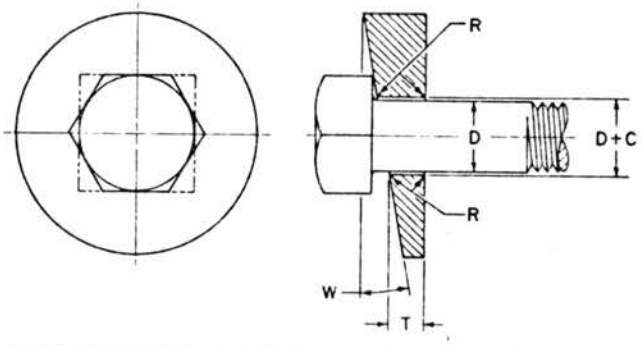

C = CLEARANCE OF HOLE (SEE PARA. 5.4.1.)
D = DIAMETER OF BOLT OR SCREW
R = RADIUS OR CHAMFER (SEE PARA. 5.4.1.)
T = THICKNESS OF WEDGE AT THIN SIDE OF HOLE EQUALS ONE HALF DIAMETER OF BOLT OR SCREW
W = WEDGE ANGLE (SEE TABLE 4)

FIG. 2—WEDGE TEST DETAILS—BOLTS AND SCREWS

and bottom edges shall be rounded or chamfered 45 deg to the following dimensions:

Nominal Bolt or Screw Size, in	Clearance in Hole, in	Radius or Depth of Chamfer, in
No. 6 thru 12	0.020	0.020
1/4 thru 1/2	0.030	0.030
9/16 thru 3/4	0.050	0.060
7/8 and 1	0.060	0.060
1-1/8 and 1-1/4	0.060	0.125
1-3/8 and 1-1/2	0.094	0.125

To meet the requirements of paragraph 4, the bolt, screw, stud, or sems shall not fracture before having withstood the minimum tensile load specified for the applicable size, thread series, and grade in Table 5. In addition, the ultimate failure location shall occur in the body or threaded section and not at the junction of the head and shank. (See footnote c under Table 3.)

ϕ 5.5.2 STUDS—Following proof load testing, the stud shall be assembled per paragraph 5.3 except with a threaded wedge, as illustrated in Fig. 3. The angle of the wedge for the stud size and grade shall be as specified in Table 4. The stud shall be assembled in the testing machine and tensile tested to failure, as described in paragraph 5.3.

The length of the threaded section of the wedge shall be equal to the diameter of the stud. To facilitate removal of the broken stud, the wedge shall be counterbored. The thickness of the wedge at the thin side of the hole shall equal the diameter of the stud plus the depth of counterbore. The supporting fixture, as shown in Fig. 3, shall have a hole clearance over the nominal size of

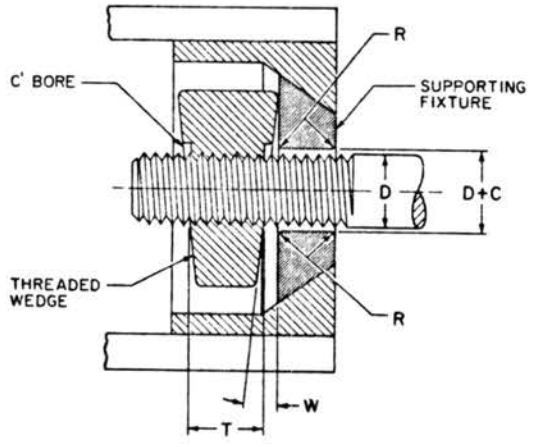

C = CLEARANCE OF HOLE (SEE PARA. 5.4.1.)
D = DIAMETER OF STUD
R = RADIUS OR CHAMFER (SEE PARA. 5.4.1.)
T = D PLUS DEPTH OF COUNTERBORE
W = WEDGE ANGLE (SEE TABLE 4)

FIG. 3—WEDGE TEST DETAILS—STUDS

TABLE 4—TENSILE TEST WEDGE ANGLES

Product	Grade	Nominal Size of Product, in	Wedge Angle, deg
Bolts and Screws	1, 2	1/4 thru 1	10
		Over 1 to 1-1/2	6
	5, 5.2, 7, 8, 8.2[a]	1/4 thru 1	10
	5, 7, 8[a]	Over 1 to 1-1/2	6
Hex Head Bolts Screws and Sems	5.1	No. 6 thru 5/8	6
Studs	1, 2, 5, 8, 8.1	1/4 thru 3/4	6
		Over 3/4 to 1-1/2	4

[a] For Grades 5, 5.2, 7, 8, and 8.2 bolts and screws which are threaded 1 dia and closer to the underside of head, wedge angle shall be 6 deg for sizes 1/4 through 3/4 in. and 4 deg for sizes over 3/4 in.

the stud, and shall have its top and bottom edges rounded or chamfered to the same limits specified for the hardened wedge in paragraph 5.5.1.

To meet the requirements of paragraph 4, the stud shall not fracture before having withstood the minimum tensile load specified for the applicable size, thread series, and grade in Table 5.

5.6 Testing of Machined Test Specimens—Where bolts, screws, and studs cannot be tested in full size for proof load and tensile strength requirements, tests shall be conducted using test specimens machined from the bolt, screw, or stud.

For $1\frac{1}{2}$ in diameter bolts, screws, and studs, a standard 0.500 in round 2 in gage length test specimen shall be turned from the bolt, screw, or stud with the axis of the specimen located midway between the center and outside surface of the bolt, screw, or stud shank, as shown in Fig. 4. Bolts, screws, and studs $\frac{3}{4}$ through $1\frac{3}{8}$ in diameter shall have their shanks machined to the dimensions of a standard 0.500 in round 2 in gage length test specimen concentric with the axis of the bolt, screw, or stud, leaving the bolt or screw head and threaded sections intact, as shown in Fig. 5. Bolts, screws, and studs $\frac{1}{4}$ through $\frac{5}{8}$ in diameter shall have their shanks machined to subsize specimens having dimensions shown in Fig. 5 and Table 6.

The test specimen shall be tensile tested as described in paragraph 5.3, and the yield strength, tensile strength, elongation, and reduction of area determined.

To meet the requirements of paragraph 4, the test specimen must have a yield strength, tensile strength, elongation, and reduction of area equal to or greater than the values for these properties specified for the applicable product size and grade in Table 1.

ϕ **5.7 Common Test Fixture Details**—The grips of the tensile testing machine shall be self-aligning to avoid side thrust on the specimen.

The wedge shall have a minimum hardness of Rockwell C45.

The hole in the fixture or washer used under the head of bolts and screws during proof load and tensile testing shall have the same clearance as that specified for wedges (paragraph 5.5.1).

Wedges, nuts, and fixtures into which bolts, screws, and studs are threaded for proof load, tensile strength, and wedge tensile testing shall have threads which are of the same size, pitch, and tolerance class as the product being tested. (For *standard products*, Class 3B tolerances are normally applicable.) For studs having interference fit threads, wedges shall be threaded to provide a *finger-free fit.*

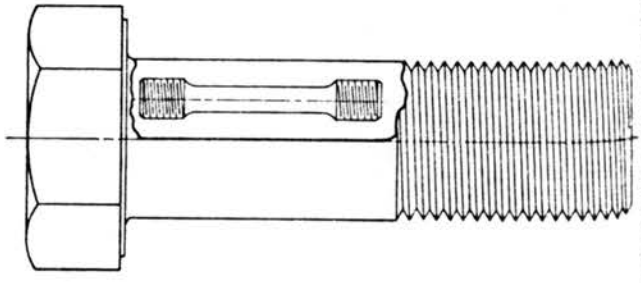

FIG. 4—LOCATION OF STANDARD ROUND 2 IN GAGE LENGTH TENSILE TEST SPECIMEN WHEN TURNED FROM LARGE SIZE BOLTS OR SCREWS

TABLE 5—PROOF LOAD AND TENSILE STRENGTH REQUIREMENTS[a]

Nominal Dia of Product and Threads per in	Stress Area, in²	Grade 1		Grade 2		Grade 4		Grades 5 and 5.2[b]		Grade 5.1		Grade 7		Grades 8, 8.1, 8.2[b]	
		Proof Load, lb	Tensile Strength Min, lb	Proof Load, lb	Tensile Strength Min, lb	Proof Load, lb	Tensile Strength Min, lb	Proof Load, lb	Tensile Strength Min, lb	Proof Load, lb	Tensile Strength Min, lb	Proof Load, lb	Tensile Strength Min, lb	Proof Load, lb	Tensile Strength Min, lb
Coarse Thread Series—UNC															
No. 6–32	0.00909	—	—	—	—	—	—	—	—	750	1,100	—	—	—	—
8–32	0.0140	—	—	—	—	—	—	—	—	1,200	1,700	—	—	—	—
10–24	0.0175	—	—	—	—	—	—	—	—	1,500	2,100	—	—	—	—
12–24	0.0242	—	—	—	—	—	—	—	—	2,050	2,900	—	—	—	—
1/4 –20	0.0318	1,050	1,900	1,750	2,350	2,050	3,650	2,700	3,800	2,700	3,800	3,350	4,250	3,800	4,750
5/16–18	0.0524	1,750	3,150	2,900	3,900	3,400	6,000	4,450	6,300	4,450	6,300	5,500	6,950	6,300	7,850
3/8 –16	0.0775	2,550	4,650	4,250	5,750	5,050	8,400	6,600	9,300	6,600	9,300	8,150	10,300	9,300	11,600
7/16–14	0.1063	3,500	6,400	5,850	7,850	6,900	12,200	9,050	12,800	9,050	12,800	11,200	14,100	12,800	15,900
1/2 –13	0.1419	4,700	8,500	7,800	10,500	9,200	16,300	12,100	17,000	12,100	17,000	14,900	18,900	17,000	21,300
9/16–12	0.182	6,000	10,900	10,000	13,500	11,800	20,900	15,500	21,800	15,500	21,800	19,100	24,200	21,800	27,300
5/8 –11	0.226	7,450	13,600	12,400	16,700	14,700	25,400	19,200	27,100	19,200	27,100	23,700	30,100	27,100	33,900
3/4 –10	0.334	11,000	20,000	18,400	24,700	21,700	38,400	28,400	40,100	—	—	35,100	44,400	40,100	50,100
7/8 – 9	0.462	15,200	27,700	15,200	27,700	30,000	53,100	39,300	55,400	—	—	48,500	61,400	55,400	69,300
1 – 8	0.606	20,000	36,400	20,000	36,400	39,400	69,700	51,500	72,700	—	—	63,600	80,600	72,700	90,900
1-1/8 – 7	0.763	25,200	45,800	25,200	45,800	49,600	87,700	56,500	80,100	—	—	80,100	101,500	91,600	114,400
1-1/4 – 7	0.969	32,000	58,100	32,000	58,100	63,000	111,400	71,700	101,700	—	—	101,700	127,700	116,300	145,400
1-3/8 – 6	1.155	38,100	69,300	38,100	69,300	75,100	132,800	85,500	121,300	—	—	121,300	153,600	138,600	173,200
1-1/2 – 6	1.405	46,400	84,300	46,400	84,300	91,300	161,600	104,000	147,500	—	—	147,500	186,900	168,600	210,800
Fine Thread Series—UNF															
No. 6–40	0.01015	—	—	—	—	—	—	—	—	850	1,200	—	—	—	—
8–36	0.01474	—	—	—	—	—	—	—	—	1,250	1,750	—	—	—	—
10–32	0.0200	—	—	—	—	—	—	—	—	1,700	2,400	—	—	—	—
12–28	0.0258	—	—	—	—	—	—	—	—	2,200	3,100	—	—	—	—
1/4 –28	0.0364	1,200	2,200	2,000	2,700	2,350	4,200	3,100	4,350	3,100	4,350	3,800	4,850	4,350	5,450
5/16–24	0.0580	1,900	3,500	3,200	4,300	3,750	6,700	4,900	6,950	4,900	6,950	6,100	7,700	6,950	8,700
3/8 –24	0.0878	2,900	5,250	4,800	6,500	5,700	10,100	7,450	10,500	7,450	10,500	9,200	11,700	10,500	13,200
7/16–20	0.1187	3,900	7,100	6,550	8,800	7,700	13,650	10,100	14,200	10,100	14,200	12,500	15,800	14,200	17,800
1/2 –20	0.1599	5,300	9,600	8,800	11,800	10,400	18,400	13,600	19,200	13,600	19,200	16,800	21,300	19,200	24,000
9/16–18	0.203	6,700	12,200	11,200	15,000	13,200	23,300	17,300	24,400	17,300	24,400	21,300	27,000	24,400	30,400
5/8 –18	0.256	8,450	15,400	14,100	18,900	16,600	29,400	21,800	30,700	21,800	30,700	26,900	34,000	30,700	38,400
3/4 –16	0.373	12,300	22,400	20,500	27,600	24,200	42,900	31,700	44,800	—	—	39,200	49,600	44,800	56,000
7/8 –14	0.509	16,800	30,500	16,800	30,500	33,100	58,500	43,300	61,100	—	—	53,400	67,700	61,100	76,400
1 –12	0.663	21,900	39,800	21,900	39,800	43,100	76,200	56,400	79,600	—	—	69,600	88,200	79,600	99,400
1 –14 uns	0.679	22,400	40,700	22,400	40,700	44,100	78,100	57,700	81,500	—	—	71,300	90,300	81,500	101,900
1-1/8 –12	0.856	28,200	51,400	28,200	51,400	55,600	98,400	63,300	89,900	—	—	89,900	113,800	102,700	128,400
1-1/4 –12	1.073	35,400	64,400	35,400	64,400	69,700	123,400	79,400	112,700	—	—	112,700	142,700	128,800	161,000
1-3/8 –12	1.315	43,400	78,900	43,400	78,900	85,500	151,200	97,300	138,100	—	—	138,100	174,900	157,800	197,200
1-1/2 –12	1.581	52,200	94,900	52,200	94,900	102,800	181,800	17,000	166,000	—	—	166,000	210,300	189,700	237,200

[a] Proof loads and tensile strengths are computed by multiplying the proof load stresses and tensile strength stresses given in Table 1 by the stress area of the thread.

The stress area of sizes and thread series not included in Table 5 may be computed from the formula: $A_s = 0.7854\left[D - \frac{0.9743}{n}\right]^2$ where D equals nominal diameter in inch, and n equals threads per inch.

[b] Grades 5.2 and 8.2 applicable to sizes 1/4 through 1 in.

6. *Marking*—Unslotted bolts, screws, and hex head sems shall be marked with the grade identification symbol shown in Table 1. In addition, bolts and screws shall be marked with the manufacturer's identification symbol. Markings shall be located on the top of the head, and may be either raised or depressed, at option of the manufacturer.

Studs need not be marked.

7. *Testing Requirements*

7.1 **Manufacturer's Responsibility**—During the manufacture of products to the requirements of this specification, the manufacturer shall make periodic tests to ensure that the properties of the product are being maintained within specified limits. Such tests shall be conducted in accordance with a sampling plan, preferably the sampling plan given in paragraph 7.3, and the test results shall be recorded in a test report. When requested in writing by the purchaser, the manufacturer shall furnish a copy of the test report certified to be a report of the results of the last completed set of tests for the specific type, size, length, and grade of product.

Additional tests of products in individual shipments are not normally contemplated. Unless otherwise agreed at time of original inquiry and purchase order, individual heats of steel need not be identified in the finished product.

7.2 **Purchaser's Options**—If the purchaser requires that additional tests be performed by the manufacturer to determine that the properties of prod-

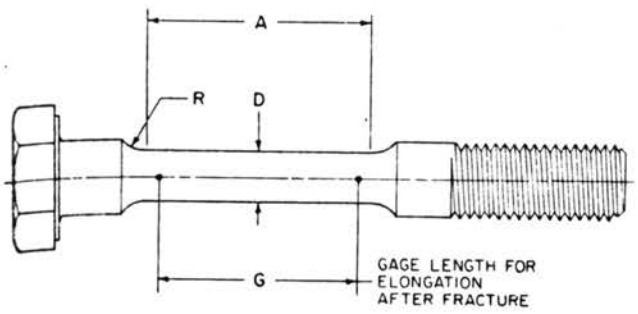

FIG. 5—TENSILE TEST SPECIMEN FOR BOLTS OR SCREWS WITH TURNED DOWN SHANK

TABLE 6—DIMENSIONS OF MACHINED TEST SPECIMENS
(SEE FIG. 5 AND PARAGRAPH 5.5)

Nominal Dia of Product	Gage Length G	Dia Parallel Section, D	Length Parallel Section, Min, A	Fillet Radius, Min, R
3/4 thru 1-1/2	2.000 ± 0.005	0.500 ± 0.010	2.25	0.38[a]
1/4 thru 5/8	1.400 ± 0.005	0.350 ± 0.007	1.75	0.25
	1.000 ± 0.005	0.250 ± 0.005	1.25	0.19

[a] Minimum radius recommended 0.38 in; 0.12 minimum permitted.

ucts in an individual shipment are within specified limits, or if the purchaser requires that a sampling plan different from that given in paragraph 7.3 shall be used when determining the acceptability of a lot, or shipment, of products, the purchaser shall specify the complete testing requirements, including sampling plan and basis of acceptance, in the original inquiry and purchase order.

7.3 General—An acceptable sampling plan is outlined below:

Number of Pieces in Lot	Minimum Number of Specimens To Be Tested
50 and under	2
51 to 500	3
501 to 35,000	5
35,001 and over	8

A lot, for purposes of selecting test specimens, shall consist of all products offered for inspection and testing at one time that are of the same type, grade, size, length, and thread series and are manufactured essentially at one time and under the same process conditions.

The same test specimen may be used for different tests wherever practical.

When tested in accordance with this sampling plan, a lot shall be subject to rejection if any of the test specimens fail to meet the applicable test requirements. If the failure of a test specimen is due to improper preparation of the specimen or to incorrect testing technique, the specimen shall be discarded and another specimen substituted.

APPENDIX

(Relative to 150,000 psi tensile bolts and screws produced from low carbon martensite steels and designated as Grade 8.2)

Coverage for 150,000 psi tensile bolts and screws produced from low carbon martensite steels is included in SAE J429 (January, 1949) because several large steel and bolt producers and users have reported highly favorable results with such products over a period of more than three years. This coverage is designated by a separate grade number (Grade 8.2) to distinguish such fasteners from Grade 8 made of medium carbon and medium carbon alloy steels.

Limited data available concerning room temperature ductility and low temperature impact characteristics indicate that fasteners made to Grade 8.2 requirements may have advantages compared to alloy steels historically used for Grade 8 fasteners.

Heat treatment control for elements such as decarburization or carburization and quench medium heat transfer are more critical for Grade 8.2 than for Grade 8 steels. Thus, more attention should be given to verification of the use of proved practices. (It is suggested that users initially require details of heat treatment practices from the fastener producer until a broad spectrum of suppliers are familiar with the closer controls necessary.)

Users should recognize the difference in stress relaxation characteristics of various steels between the temperature range of 650°F, minimum, specified for Grade 8.2 and 800°F, minimum, specified for Grade 8, when considering bolts and screws that may be exposed to such temperature range. The data available on elevated temperature properties of Grade 8.2 indicates that performance testing is desirable in applications where the operating temperature exceeds 500°F (as may also be the case with Grade 8 fasteners).

The requirements stated, herein, limit the use of steels to those which have been used on a production basis with highly favorable results. There is some evidence that other steels are satisfactory also, but these are excluded from the standard until more widespread experience is had with them.

MECHANICAL AND MATERIAL REQUIREMENTS FOR METRIC EXTERNALLY THREADED STEEL FASTENERS—SAE J1199

SAE Standard

Report of Iron and Steel Technical Committee approved February 1978.

1. Scope

1.1 This standard covers the mechanical and material requirements for eight property classes of steel, externally threaded metric fasteners in sizes M1.6 thru M36, inclusive, and suitable for use in automotive and related applications.

1.2 Products included are bolts, screws, studs, U-bolts, pre-assembled screw and washer assemblies (sems), and products manufactured the same as sems except without washer.

1.3 Products not covered are tapping screws, thread rolling screws, and self-drilling screws. Mechanical and material requirements for these products are covered in other SAE documents.

1.4 The term *stud* as referred to herein applies to a cylindrical rod of moderate length, threaded on either one or both ends or throughout its entire length. It does not apply to headed, collared, or similar products which are more closely characterized by requirements shown herein for bolts.

1.5 For specification purposes, this standard treats U-bolts as studs. Thus, wherever the word *studs* appears, *U-bolts* is also implied, U-bolts covered by this standard are those used primarily in the suspension and related areas of vehicles. (Designers should recognize that the *U* configuration may not sustain a load equivalent to two bolts or studs of the same size and grade; thus actual load carrying capacity of U-bolts should be determined by saddle load tests.)

2. Designations

2.1 Property classes are designated by numbers where increasing numbers generally represent increasing tensile strengths. The designation symbol consists of two parts:

(a) The first numeral of a two-digit symbol or the first two numerals of a three-digit symbol approximates $^1/_{100}$ of the minimum tensile strength in MPa.

(b) The last numeral approximates $^1/_{10}$ of the ratio expressed as a percentage between minimum yield stress and minimum tensile stress.

2.2 For specification purposes (on engineering drawings, purchase orders, etc.) all property class designations are used in combination with a single basic specification number as follows:

SAE J1199 (4.6)	SAE J1199 (9.8)
SAE J1199 (4.8)	SAE J1199 (10.9)
SAE J1199 (5.8)	SAE J1199 (12.8)
SAE J1199 (8.8)	SAE J1199 (12.9)

2.3 Property Classes

2.3.1 Machine screws are normally available only in classes 4.8 and 9.8; other bolts, screws, and studs are available in all classes within the specified product size limitations given in Table 1.

2.3.2 Screw and washer assemblies (sems) are covered by classes 4.8 and 9.8, and allowable deviations from normal 9.8 requirements are stated in footnotes throughout the standard.

2.3.3 At the option of the manufacturer, class 5.8 may be supplied when either class 4.6 or 4.8 is ordered, and class 4.8 may be supplied when class 4.6 is ordered.

2.4 Conversion Guidance

2.4.1 For guidance purposes only, to assist designers in selecting a proper class:

(a) Class 4.6 is approximately equivalent to SAE J429, Grade 1 and ASTM A307, Grade A.

(b) Class 5.8 is approximately equivalent to SAE J429, Grade 2.

(c) Class 8.8 is approximately equivalent to SAE J429, Grade 5, and ASTM A449.

(d) Class 9.8 has properties approximately 9% stronger than SAE J429 Grade 5, and ASTM A449.

(e) Class 10.9 is approximately equivalent to SAE J429, Grade 8, and ASTM A354, Grade BD.

STATEMENT OF COMPLIANCE WITH

MANUAL OF RULE MAKING PROCEDURES

I, Assistant Attorney General John R. Murphy, do hereby declare that I have examined the proposed rules and all related documents and that, based on them and my personal familiarity with the applicable procedures, the Manual of Rule Making Procedures has been followed.

Assistant Attorney General

Dated: 9-10-79

ADMIN 1000 (Rev. 1/78)

STATE OF MINNESOTA

DEPARTMENT PUBLIC SAFETY

Office Memorandum

TO : Lee Sheehy

DATE: September 19, 1979

FROM : Diane Hamilton

PHONE: 296-7096

SUBJECT: Wheelchair Securement Devices Rules

As we discussed on the telephone, we found a typographical error in the final adopted version of the above mentioned rules. On page 3, Rule 1.0191 B, lines 9 & 10 were typed incorrectly, with several words left out. Enclosed are corrected copies for insertion into the rules as filed with you on September 10, 1979.

Corrected page inserted by [illegible] on 9-24-79

RECEIVED
SEP 20 1979
ATTORNEY GENERAL
ADMINISTRATIVE AGENCIES

11 MCAR 1.0191 Minimum standards.

Each wheelchair securement device shall:

A. Attach to the wheelchair frame on at least three (3) points. The three (3) points of contact shall be spaced to provide effective securement. Alternatively, a securement device meeting all other requirements of these rules may attach to two widely spaced points on the wheelchair frame if the wheel tires or the wheelchair frame abuts an unyielding surface in a manner which meets the approval requirements of 11 MCAR 1.0192.

B. Consist of at least two (2) webbing - type belts described in clause (1) or at least two (2) all-metal devices described in clause (2) or one or more of each such device.

1. Webbing-type devices shall be assemblies that meet or exceed Type 2 pelvic restraint seat belt requirements as specified in Section S4.2 (2) (b) of Federal Motor Vehicle Safety Standard No. 209, 49 Code of Federal Regulations, Part 571.209 (1977 edition) or be certified by the manufacturer that such device meets or exceeds assembly strength of 5,000 pounds in loop fashion or 2,500 pounds on each anchorage leg.

a. Certification may be the specification listed in catalogs or publications by the manufacturer.

b. All new construction of such securement devices and repairs to webbing shall conform with standards established by the manufacturer of the webbing.

2. All metal securement devices shall be of a design and construction which provides wheelchair securement strength at least equal to the strength of a webbing-type device comprised of three separate attachments and anchorages.

C. Be free of sharp edges, corners and jagged projections to minimize injury to persons in the event of unintentional contact.

D. Be capable of retraction, and be readily removable or otherwise suitably storable when not in use.

E. Be anchored to the vehicle at not less than two separate points with bolts, nuts and lock washers or self-locking nuts.

1. Bolts used shall be not less than 3/8 inch in diameter and of National Fine Thread S.A.E. grade 5 designation or equivalent.
2. Where anchorage bolts do not pierce the vehicle frame, subframe, bodypost or equivalent metal structure, a metal reinforcement plate or washer not less than 1/16 inches thick by 2 1/2 inches in diameter is required.
3. In no event shall interior paneling constitute anchorage for a point of securement.
4. A metal track, rail or similar device permitting attachment of the securement device at optional points thereon may be used to anchor the securement device, provided:
   a. The track, rail or other device is secured to the vehicle in compliance with anchorage requirements of this rule.
   b. The attachment of the securement device to the anchor point is by means of a positive attachment metal fitting.

F. The method or device which provides attachment of the securement device to the wheelchair frame and the method or device locking the securement device in the load-holding mode shall each be of a strength and design which will assure performance of their intended function until the securement device is intentionally released.

G. Buckles, anchorage fittings and other components essential to the functioning of the securement device shall be integrated into the securement device in accordance with recognized practices and in a manner which preserves the overall strength of the securement device.

11 MCAR 1.0192 Approval procedure.

A. Application for approval of a wheelchair securement device shall be made to the Commissioner and shall be accompanied by the manufacturer's actual or proposed written installation instructions and photographs or drawings

STATE OF MINNESOTA
OFFICE OF HEARING EXAMINERS

FOR THE DEPARTMENT OF PUBLIC SAFETY

In the Matter of the Proposed Adoption of Rules of the State Department of Public Safety Governing Minimum Standards for Wheelchair Securement Devices.

REPORT OF THE HEARING EXAMINER

The above-entitled matter came on for hearing before Hearing Examiner Peter C. Erickson of the State Office of Hearing Examiners at 9:00 a.m. on Thursday, May 17, 1979 in room B-9 of the Department of Transportation Building, St. Paul, Minnesota.

John R. Murphy, Assistant Attorney General, appeared as counsel on behalf of the Department of Public Safety. Major Dick Lueck, State Trooper, testified in support of the proposed rules on behalf of the Department. The hearing continued until all interested groups or persons had had an opportunity to be heard concerning the adoption of the proposed rules.

Pursuant to Minn. Stat. sec. 15.0412, subd. 4, this Report shall be available for review to all affected individuals upon request for at least five days. Thereafter, the Department of Public Safety shall, if it proposes to adopt the rules as originally proposed or amended, submit a copy of the Order Adopting Rules, a copy of any additional agency findings, a copy of the rules as originally proposed, and a copy of the rules as adopted to the Chief Hearing Examiner for review pursuant to Minn. Stat. sec. 15.052, subd. 4. The submission to the Chief Hearing Examiner shall precede review by the Attorney General. The Chief Hearing Examiner shall complete his review and submit his report to the Department on the issues of substantial changes in the rule and compliance with Minn. Stat. sec. 15.0412 within ten calendar days. The Department will be responsible for filing the rules with the Attorney General and for notifying persons who have indicated that they wish to be notified of such filing.

Based upon all the records and proceedings herein, the Examiner makes the following:

FINDINGS OF FACT

1. On March 27, 1979, the Department of Public Safety filed the following documents with the Chief Hearing Examiner:

(a) A copy of the proposed rules.
(b) The Order for Hearing proposed to be issued.
(c) The Notice of Hearing proposed to be issued.
(d) A statement of the number of persons expected to attend the hearing and estimated length of the Agency's presentation.

2. On April 16, 1979, A Notice of Hearing and a copy of the proposed rules were published at 3 State Register 1901.

3. On April 13, 1979, the Department mailed the Notice of Hearing to all persons and associations who had registered their names with the Secretary of State for the purpose of receiving such notice.

4. On April 20, 1979, the Department filed the following documents:

(a) The Order for Hearing and authorizing resolution.
(b) The Notice of Hearing as mailed.
(c) The Affidavit of Receipt of the Secretary of State's list.
(d) The Affidavit of Mailing the Notice to all persons on the Secretary of State's list.
(e) The Secretary of State's list.
(f) The Statement of Need and Reasonableness.
(g) All materials received following a Notice of Intent to Solicit Outside Opinion published at 2 State Register 2323, (June 26, 1978)
(h) The names of Department personnel who will represent the Agency at the hearing together with the names of any other witnesses solicited by the Agency to appear on its behalf.

The documents were available for inspection at the Office of Hearing Examiners from the date of filing to the date of the hearing.

5. The record remained open through May 24, 1979, for the receipt of written comments and statements, the period having been extended by order of the Hearing Examiner to 18 calendar days following the hearing.

6. Pursuant to the authority contained in Minn. Stat. sec. 15.0412, subd. 4, the Chief Hearing Examiner has issued an Order dated May 30, 1979, approving the incorporation by reference of national stadards and federal regulations into the proposed rules.

7. Statutory authority to promulgate the proposed rules is contained in Minn. Stat. sec. 299A.18, (1978).

8. Proposed 11 MCAR sec. 1.0188 delineates the purpose and authority for the Standards for Wheelchair Securement Devices.

a. Raymond F. Kroll, representing the Minnesota School Bus Industry, commented that the words "seat belt" should be replaced with restraint to allow for more flexibility in the type of securement device used. The Examiner finds, however, that sec. 1.0188, as proposed, is both needed and reasonable.

9. Proposed 11 MCAR sec. 1.0189 (hereinafter "11 MCAR" will be omitted from the citations) sets forth definitions for the terms "anchorage", "commissioner", "interior paneling", and "wheelchair securement device".

a. Several persons commented that a definition of "wheelchair" should be contained in the rules because so many different types of equipment can function as a wheelchair.

b. Raymond Kroll suggested that the language, "or seat frame rail", be added to sec. 1.0189 C. to allow greater flexibility for attachment of restraints to the vehicle.

c. The Examiner finds that proposed sec. 1.0189 is both needed and reasonable.

10. Proposed sec. 1.0190 reiterates statutory requirements regarding the securement of wheelchairs in vehicles.

a. At hearing, the Department proposed to amend sec. 1.0190 B. as follows to clarify the intent of the section:

> B. Each wheelchair securement device shall attach to the frame of the wheelchair without damaging the frame. "Damage" includes effects harmful to the stength, integrity or serviceableness of the wheelchair, but does not include minor dents, scratches or other cosmetic blemishes not materially affecting serviceableness.

b. Mr. Kroll proposed to delete sec. 10190 C. which prohibits the attachment of securement devices to the wheels of wheelchairs. He contends that there is nothing in the law which proscribes the use of wheels to secure the wheelchair.

c. Jan P. Vanderwall, Transportation Supervisor of the Roseville Area Schools, stated that securement devices should be allowed to be attached to both the frame and the wheels of the chairs so that devices in use today would not have to be replaced.

d. The Examiner finds that proposed sec. 1.0190, as amended above in paragraph a., is both needed and reasonable. Testimony from several witnesses indicated that any kind of attachment of securement devices to wheels could easily result in damage to the wheel.

11. Proposed sec. 1.0191 prescribes minimum standards for wheelchair securement devices, including requirements for attachment and anchoring, and specifications for metal and webbing type devices.

a. At hearing, the Department proposed to amend sec. 1.1091 B. as follows to specify the federal regulations referred to:

> B.(1) Webbing type devices shall be assemblies that meet or exceed Type 2 pelvic restraint seat belt requirements as specified in Section S4.2 (2)(b) of Federal Motor Vehicle Safety Standard No. 209, 49 Code of Federal Regulations, Part 571.209 (1977 edition) or be certified by the manufacturer that such device meets or exceeds assembly strength of 5,000 pounds in loop fashion or 2,500 pounds on each anchorage leg.

Also, two additional paragraphs were included to further clarify the minimum standards for securement deviced. They read as follows:

> F. The method or device which provides attachment of the securement device to the wheelchair frame and the method or device locking the securement device in the load-holding mode shall each be of a strength and design which will assure performance of their intended function until the securement device is intentionally released.
>
> G. Buckles, anchorage fittings and other components essential to the functioning of the securement device shall be integrated into the securement device in accordance with recognized practices and in a manner which preserves the overall strength of the securement device.

b. The Examiner finds that proposed sec. 1.0191, as amended above, is both needed and reasonable. Marshall R. Whitlock, Executive Secretary, Legislative Commission to Review Administrative Rule, commented that certification by the manufacturer (see amended B.(1) above) may be an impermissible delegation of authority. However, the Examiner finds that the certification of strength is a standard imposed by the Department and not a delegation of authority. State agencies cannot be expected to take the full burden of inspection for performance standards at every stage

the
in/manufacturing and installation process.

12. Proposed sec. 1.0192 contains the procedures for obtaining approval of a wheelchair securement device, including test procedures, labeling requirements and revocation of approval upon showing that the device does not comply with rule standards. The approval procedure is intended to reasonably reflect the adequacy of the securement device in actual use.

a. Mr. Witlock commented that the five year expiration of approval contained in sec. 1.0192 C. does not include language indicating how the approval can be renewed. The Examiner finds that this section is unclear as to renewal or reinspection and should be amended to spell out the procedure to be followed after approval has expired.

b. Mr. Kroll stated that the burden for seeking approval of securement devices should be placed on the manufacturer and not on the vehicle owner or transporter. He also proposed that a new paragraph F. be added to provide an exemption from approval for specially designed securement devices.

c. Jan Vanderwall commented that the requirement that a wheelchair "not be modified to accommodate the securement device" takes away from the school district or contractor an option "which could mean the difference between safe and unsafe transportation." Mr. Vanderwall stated that some students require very specialized support in order to be transported which often results in the use of custom hardware. The Examiner finds that it is unreasonable to not make some provision for equipment which has been customized to meet the needs of an individual student. Either the second sentence in sec. 1.0192 B. should be deleted or new language should be added to take this concern into account.

d. The Examiner finds that, as proposed, sec. 1.0192 is not reasonable. (see paragraph a. and c. above) However, if the concerns spelled out in those paragraphs are remedied, sec. 1.0192 will be both needed and reasonable.

13. Proposed sec. 1.0193 requires vehicles equipped with wheelchair securement devices to be equipped with seat belts at each wheelchair position.

a. At hearing, the Department proposed to strike all of sec. 1.0193 and replace it with the following:

A. Each vehicle equipped with a wheelchair securement device shall be equipped with a Type 2 seat belt assembly with a detachable upper torso portion at each such wheelchair position in the vehicle or, in the alternative, shall be equipped with a Type 1 pelvic restraint assembly and a length of Type 1 ~~of~~ or Type 2 seat belt webbing, with buckle, adequate to encircle the chest of the wheelchair occupant and the backrest of the wheelchair.

B. Type 1 and Type 2 seat belt assemblies shall meet the requirements of Sections S 1 through S 4.4 of Federal Motor Vehicle Safety Standard No. 209, 49 Code of Federal Regulations, Part 571.209 (1977 edition).

C. Type 1 and Type 2 seat belt assemblies and the detachable upper torso restraint, if a detachable upper torso restraint is installed in lieu of using a length of seat belt webbing to encircle the chest of the occupant and the backrest of the wheelchair, shall be installed and anchored in accordance with Sections S 1 through S 4.3.2 of Federal Motor Vehicle Safety Standard No. 210, 49 Code of Federal Regulations, Part 571.210 (1977 edition).

The amended version specifies the federal standards which control and eliminates the date differntiation in the rule as proposed. The Examiner finds that sec. 1.0193, as amended above, is both needed and reasonable.

14. Proposed sec. 1.0194 states that it is the responsibility of the driver of the vehicle to secure an occupied wheelchair; fasten the seat belt assembly; and store equipment devices when not in use.

a. Mr. Kroll proposed to substitute more flexible "restraint" language in place of the "seat belt" language contained in the rule.

b. Mr. Whitlock commented that the responsibility of the driver to "not fasten the assembly if doing so would aggrevate a physical condition of the occupant" may require training which is not provided and result in legal liability in the exercise of that discretion. The Department should examine this provision carefully to determine the implications of this driver responsibility.

c. The Examiner finds that proposed sec. 1.0194 is both needed and reasonable.

15. Proposed sec. 1.0195 authorizes the Commissioner to order remedial action if it is determined that a securement device does not meet the mandated standards.

16. Proposed sec. 1.0196 states that the rules herein shall be effective on October 1, 1979 for all securement devices installed after that date and on December 31, 1980 for all devices presently in use.

a. Several persons commented that the effective date of the proposed rules should be delayed so that further studies on securement devices could be made. Minn. Stat. sec. 299A.18 does state, however, that the Commissioner shall adopt rules no later than July 1, 1979.

Based upon the foregoing Findings of Fact, the Hearing Examiner makes the following:

C O N C L U S I O N S

1. The Department of Public Safety gave due, timely and adequate legal notice of the hearing.

2. Pursuant to Minn. Stat. Sec. 15.052, subd. 3 (1978), it is the duty of the Hearing Examiner to: ". . .(4) make a report on each proposed agency action . . . taking notice of the degree to which the agency has (i) documented its statutory authority to take the proposed action; (ii) fulfilled all relevant, substantive and procedural requirements of law or rule, and (iii) demonstrated the need for and reasonableness of its proposed action with an affirmative presentation of facts".

3. The Department of Public Safety has documented its statutory authority to promulgate the proposed rules.

4. The Department has fulfilled all relevant, substantive and procedural requirements of law or rule.

5. The Department has demonstrated the need for and reasonableness of the proposed rules, with the exception noted in Finding 12.d., by an affirmative presentation of facts.

Based upon the foregoing Conclusions, the Hearing Examiner makes the following:

R E C O M M E N D A T I O N

That the Department of Public Safety adopt the proposed rules as amended and recommended to be amended herein.

Dated this 25 day of June, 1979.

Peter C. Erickson

PETER C. ERICKSON
Hearing Examiner

STATE OF MINNESOTA

BEFORE JOHN P. SOPSIC

COUNTY OF RAMSEY

COMMISSIONER OF PUBLIC SAFETY

In the matter of the proposed Adoption
of Rules of the State Department of
Public Safety Governing Minimum Standards
for Wheelchair Securement Devices

ORDER ADOPTING RULES

The above-entitled matter came on for hearing before the Commissioner of Public Safety of the State of Minnesota on the 17th day of May, 1979, at 9:00 A.M. in Room B9, Transportation Bldg., St. Paul, Minnesota, after proper notice required by Minn. Stat. 15.0412 (1978) was served upon all persons, associations and other interested groups registered with the Secretary of State for that purpose.

After affording interested persons an opportunity to present written and oral data, statements and arguments, having considered all of the evidence adduced and upon the records, files and proceedings herein, and applicable statutory standards or criteria, and having confirmed the need for the above captioned rules and the reasonableness thereof;

NOW, THEREFORE, IT IS ORDERED that these rules identified as 11 MCAR 1.0188 - 1.0196 Standard for Wheelchair Securement Devices, are adopted this 24th day of August, 19 79, pursuant to authority vested in me by Minn. Stat. 299A.01, subd. 6 (1978).

STATE OF MINNESOTA
DEPARTMENT OF PUBLIC SAFETY

John P. Sopsic

COMMISSIONER OF PUBLIC SAFETY

STATE OF MINNESOTA

BEFORE JOHN P. SOPSIC

COUNTY OF RAMSEY

COMMISSIONER OF PUBLIC SAFETY

In the matter of the Proposed Adoption
of Rules of the State Department of
Public Safety Governing Minimum Standards
for Wheelchair Securement Devices

FINDINGS OF FACT

The above-entitled matter came on for hearing before Peter Erickson, Office of Hearing Examiners of the State of Minnesota on the 17th day of May, 1979, at 9:00 a.m. in Room B9 Transportation Bldg., St. Paul, Minnesota after proper notice required by Minn. Stat. 15.0412 (1978) was served upon all persons, associations and other interested groups registered with the Secretary of State for that purpose.

After affording interested persons an opportunity to present written and oral data, statements and arguments, having heard all of the testimony, having considered all of the evidence adduced and upon the records, files and proceedings herein, the Hearing Examineer has made his findings, attached. Upon review of the hearing Examiner's findings and the evidence and statements submitted by interested parties, the report of the Hearing Examiner is hereby adopted as the findings of the Commissioner of Public Safety, and in addition I find the following:

1. Proposed rule 1.0188 sets forth a brief statement of the purpose and scope of the Standard for Wheelchair Securement Devices. The adopted rule adds a subsection, "Scope." Although not suggested by the Hearing Examiner, the department finds that a brief statement, at the beginning of the rules, reiterating statutory language and specifying situations not subject to the rules, will minimize confusion concerning the applicability of the rules.

2. Proposed rules 1.0189 sets forth certain definitions. The adopted rule adds definitions for the terms "occupant restraint," "wheelchair" and "operator." These definitions were not specifically recommended by the Hearing Examiner; however several persons at the hearing suggested that a definition of "wheelchair" be included because so many different types of equipment have a similar function. Therefore, the department finds that a definition of "wheelchair" is necessary to promote clear understanding of the applicability of the rules, that a definition of "occupant restraint" is necessary to promote understanding of rule 1.0193, and that a definition of "operator" is necessary to give meaning to the new language in rule 1.0188 C. Scope.

3. Adopted rules 1.0190 B, 1.0191 B, 1.0191 F and 1.0191 G contain additional language from their proposed versions. These changes were proposed and substantiated by the department at the hearing, and are addressed in items 10 and 11 of the Hearing Examiner's Report.

4. Proposed rule 1.0191 A, requires three points of attachment of the securement device to the wheelchair frame. The adopted rule contains additional language to permit use of devices which attach to two points on the wheelchair frame when the frame or wheel tires abut on unyielding surface. The department finds that this type of securement can effectively secure a wheelchair (the device will have to pass the approval tests), it allows industry more latitude in design and it addresses the issues raised by Bill Olson on page 80 of the Hearing Transcript.

5. Proposed rule 1.0192 contains procedures for departmental testing and approval of wheelchair securement devices. It was suggested at the hearing that in certain cases it is unreasonable to prohibit modification of the wheelchair to accomodate the securement device. It was also suggested that procedures for renewal of approval of the securement device be included in the rules.

a. As recommended by the Hearing Examiner, in the adopted rule the prohibition on modification of the wheelchair to accomodate the securement device is removed. The original purpose of the prohibition was to promote the use of devices which could be used on a variety of wheelchair designs without modification to the individual wheelchair. As a result of testimony received at the hearing, the department finds that there is a need to permit the use of devices which involve modification to the wheelchair in order to achieve effective securement of special purpose wheelchairs. Certificates of approval for such devices will be clearly marked that modification of the wheelchair to accept the device is required.

b. The department finds that renewal of device approval at five year intervals is unnecessary. Instead, in the adopted rule paragraph C, the five year life of the approval and remaining related references to life of the approval are deleted. The purpose of the approval procedure is to visually determine that the device meets the standards and to test the performance of the device under simulated operating conditions. The intent in expiring the approval was to require repitition of the approval process in order to assure that no materials, design or construction changes had occurred in new devices manufactured since the approval was granted. However, there is a separate inspection of the securement device following its installation in the vehicle and annually thereafter, performed by personnel not involved in the original approval process. This inspection will reveal instances where a device has been altered in design or construction after its approval.

6. Adopted rule 1.0193 contains both deleted and new language from its proposed version. These changes were proposed and substantiated by the department at the hearing, and are addressed in item 13 of the Hearing Examiner's Report.

7. Proposed rule 1.0193 is entitled "Seat Belts" and prescribes seat belt assembly requirements. Adopted rule 1.0193, as amended at hearing, delineates the type of seat belt assembly required. The adopted language both clarifies the requirement and infers a broader meaning. Therefore, the department finds that is is necessary to change the title from "Seat Belts" to "Occupant Restraint" to better depict the contents of the entitled rule.

8. Proposed rule 1.0194 places responsibility on the driver of the vehicle to secure an occupied wheelchair and to fasten the restraint, or to not fasten it if doing so would aggrevate a physical condition of the occupant. As a result of various comments at the hearing concerning the possible liability this would place on the driver, the Hearing Examiner suggested that this rule be examined to determine the implications of this driver responsibility. The department finds that it is neither the intent nor within the scope of this rulemaking to place a specific legal liability on the drivers of vehicles transporting handicapped persons. Therefore, the adopted rule allows the occupant or other responsible person to forbid the driver from fastening the restraint.

9. Proposed rule 1.0195 authorizes the Commissioner to order removal or correction of a device found not meeting the standard. The department finds this rule to be vague in intent, therefore the adopted rule is amended to more clearly indicate that the corrective action is to be directed at a particular securement device.

10. Proposed rule 1.0196 contains the effective dates for the rules.

a. The department finds that the proposed effective dates of October 1, 1979 and 1980 are no longer realistic and a more orderly transition would be in the public interest. The adopted rule changes the effective dates to December 31, 1979 and 1980.

b. With the extension of the effective dates the department finds it in the best interest of wheelchair occupants to provide minimal restraint requirements during the period of time prior to mandatory installation or use of an approved device. Therefore the adopted rule contains a new paragraph B which prescribes such minimal securement.

STATE OF MINNESOTA
DEPARTMENT OF PUBLIC SAFETY

COMMISSIONER OF PUBLIC SAFETY

8/23/79
DATE