

Minnesota Attorney General: Administrative Rules Proceedings

Copyright Notice:

This material may be protected by copyright law (U.S. Code, Title 17). Researchers are liable for any infringement. For more information, visit www.mnhs.org/copyright.

Version 3
August 20, 2018

Our File # 550.

RULES REVIEW CHECKLIST

DATE RULES RECEIVED 10-16-79 Temporary Rule _____

Resubmitted and Received _____
Joanne 10/26.

DUE DATE 11-5-79

a. Returned to Agency ~~w/o filing w/Secy of State~~ 11-5-79
b. Approved 11-5-79 Date Sent Back to Agency _____

- -

1. Rules as Adopted ✓
2. Rules as Proposed ✓
3. Certificate of Board's Authorizing Resolution, where applicable ✓
4. Order for Hearing ✓
5. Notice of Hearing ✓
   (i) Sufficiency ✓
6. Secretary of State's List ✓
7. Certificate of Acquisition of Secretary of State's List ✓
8. Certificate of Delivery from Secy of State ✓
9. Affidavit of Mailing ✓
   (i) At least 30 days prior to hearing ✓
10. State Register, publication 30 days before ✓
11. Statement of Need and Evidence ✓
12. Hearing Examiner's Report ✓ See p. 4 ¶ 12.
13. Agency's Findings of Fact ✓
14. Certificate of Board's Resolution Adopting Rules, where applicable ✓
15. Order Adopting ✓
16. Report of Chief Hearing Examiner ✓
    (i) Finding of No Substantial Change ✓
    (ii) Permission to Incorporate by Reference, where applicable N/A
17. Certificate of Compliance with Rulemaking Procedures ✓
18. Copy of Notice of Intent to Solicit Outside Opinion, where applicable ✓
19. Petition by Public, where applicable N/A.

STATE OF MINNESOTA

COUNTY OF RAMSEY

MINNESOTA POLLUTION CONTROL AGENCY

In the Matter of the Proposed Adoption of MCAR 4.8051-4.8052 Constituting Rules for the Control of Pollution from Animal Feedlots and the Repeal of Minn. Rules SW 51-61

NOTICE OF HEARING

NOTICE IS HEREBY GIVEN that rule hearings in the above-entitled matter will be held at the following locations:

April 12, 1979, Thursday, Board Room of the Minnesota Pollution Control Agency, 1935 West County Road B-2, Roseville, Minnesota, convening at 10:00 a.m.

April 16, 1979, Monday, Basement Conference Room of the Minnesota Department of Transportation, 1010-21st Avenue Northwest, Industrial Park, Owatonna, Minnesota, convening at 1:00 p.m. and reconvening at 7:00 p.m.

April 17, 1979, Tuesday, Room 234 C.A.B., Southwest State University, Marshall, Minnesota, convening at 1:00 p.m. and reconvening at 7:00 p.m.

April 18, 1979, Wednesday, Commissioners Room at Becker County Courthouse, Lake Street, Detroit Lakes, Minnesota, convening at 1:00 p.m. and reconvening at 7:00 p.m.

April 19, 1979, Thursday, Meeting Room at Crow Wing County Courthouse Annex, East Laurel Street, Brainerd, Minnesota, convening at 1:00 p.m. and reconvening at 7:00 p.m.

The hearings will continue until all persons have had an opportunity to be heard. The Agency will present its witnesses and evidence in support of the adoption of the above-captioned rule primarily at the hearing in Roseville, Minnesota.

All interested or affected persons will have an opportunity to participate at the rule hearings. Statements may be made orally and written materials may be submitted at the hearing. In addition, written maerials may be submitted by mail to Mr. Howard Kaibel, Office of Hearing Examiners, 1745 University Avenue, St. Paul, Minnesota 55104, (612) 296-8107, either before or after the hearings until the record is closed. The record will remain open for five working days after the rule hearings end, or for a longer period not to exceed twenty calendar days if ordered by the Hearing Examiner. In the interest of efficiency, it is suggested that those persons, organizations, or associations having a common viewpoint or interest in these proceedings join together where possible and present a single statement in behalf of such interests.

NOTICE: The proposed rule is subject to change as a result of the rule hearing process. The Agency therefore strongly urges those who are potentially affected in any manner by the substance of the proposed rule to participate in the rule hearing process.

The proposed rules, MCAR 4.8051-4.8052, would provide for the control of pollution caused by animal feedlots by establishing standards and a permitting program for animal feedlot operations. The proposed rules would also establish a cooperative program between counties and the Agency if the counties elect to establish a program. These rules are intended to supercede Minn. Rules SW 51-61, therefore, Minn. Rules SW 51-61 are being repealed. The Agency's authority for the promulgation of these rules is contained in Minn. Stat. ch. 115 and 116 (1978) generally and specifically in Minn. Stat. §116.07 subd. 7 (1978).

Copies of the proposed rule are now available and one free copy may be obtained by writing to Mr. Wayne Anderson, Division of Water Quality, Minnesota Pollution Control Agency, 1935 West County Road B2, Roseville, Minnesota 55113. Additional copies will be available at the hearing at each location.

NOTICE Any person may request notification of the date on which the Hearing Examiner's Report will be available, after which date the Agency may not take any final action on the rule for a period of five working days. Any person may request notification of the date on which the hearing record has been submitted (or resubmitted) to the Attorney General by the Agency. If you desire to be so notified, you may so indicate at the hearings. After the hearings, you may request notification by sending a written request to the Hearing Examiner (in the case of the Hearing Examiner's Report), or to the Agency (in the case of the Agency's submission or resubmission to the Attorney General).

NOTICE IS HEREBY GIVEN that 25 days prior to the hearings, a Statement of Need and Reasonableness will be available for review at the Agency and at the Office of Hearing Examiners. This Statement of Need and Reasonableness will include a summary of all of the evidence which will be presented by the Agency at the Hearing justifying both the need for and the reasonableness of the proposed rules. Copies of the Statement of Need and Reasonableness may be obtained from the Office of Hearing Examiners at a minimal charge.

Please be advised that Minn. Stat. ch. 10A (1978) requires each lobbyist to register with the Ethical Practices Board within five days after he commences lobbying. Lobbying includes attempting to influence rulemaking by communicating or urging others to communicate with public officials. A lobbyist is generally any individual who spends more than $250.00 per year for lobbying or any individual who is engaged for pay or authorized to

spend money by another individual or association and who spends more than $250.00 per year or five hours per month lobbying. The statute in question provides certain exceptions. Questions should be directed to the Minnesota Ethical Practices Board, 41 State Office Building, St. Paul, Minnesota 55155, telephone (612) 296-5615.

Terry Hoffman
Executive Director
Minnesota Pollution Control Agency

Dated: 2-27-79

STATE OF MINNESOTA

COUNTY OF RAMSEY

MINNESOTA POLLUTION

CONTROL AGENCY

In the Matter of the Proposed Adoption of 6 MCAR §§4.8051-4.8052 Constituting Rules for the Control of Pollution from Animal Feedlots and the Repeal of Minn. Rules SW 51-61

No. PCA-79-004-HK

FINDINGS OF FACT AND CONCLUSIONS

The above-entitled matter came duly on for hearing before Howard Kaibel, Jr., Hearing Examiner, on the 12th day of April, 1979, at the Board Room of the Minnesota Pollution Control Agency, 1935 West County Road B-2, Roseville, Minnesota, commencing at 10:00 a.m. Said hearing was duly recessed and reconvened at the following times and locations: Basement Conference Room of the Minnesota Department of Transportation, 1010-21st Avenue Northwest, Industrial Park, Owatonna, Minnesota, on April 16, 1979, commencing at 1:00 p.m. and 7:00 p.m.; Room 234 C.A.B., Southwest State University, Marshall, Minnesota, on April 17, 1979, commencing at 1:00 p.m. and 7:00 p.m.; Commissioners Room at Becker County Courthouse, Lake Street, Detroit Lakes, Minnesota, on April 18, 1979, commencing at 1:00 p.m. and 7:00 p.m.; Meeting Room at Crow Wing County Courthouse Annex, East Laurel Street, Brainerd, Minnesota, commencing at 1:00 p.m. and 7:00 p.m.

After affording interested persons an opportunity to present written and oral data, statements and arguments, having considered all the evidence adduced and upon the records, files and proceedings herein, this Agency hereby accepts and adopts the Findings of Fact, Conclusions and Recommendation of the Hearing Examiner and incorporates them hereto by reference with the following amendments thereto:

FINDINGS OF FACT

1. Findings No. 12, page 4, shall be amended to read as follows:

That further specificity is required regarding the definition of "potential pollution hazard" contained in the proposed rules. Mr. Baltezore at the Detroit Lakes hearing, and in written comments, and others urged strongly that this be given further attention because it goes to the "heart" of the matter. Proposed 6 MCAR §4.8051 B.19.b. would define this term as discharges to state water "in excess of applicable standards . . . or will violate any applicable state rules and regulations." The public concern related to identifying "applicable standards" and overlapping rules of other state agencies. Agency staff indicated that the "applicable standards" referenced meant the water quality standards like those contained in Minn. Rules WPC 1-33. Specifically, staff testimony indicated that the water quality standards contained in Minn. Rules WPC 14, 15, 24 and 25 were applicable. The public concern about identifying these standards will be alleviated by the following revised definition:

> . . . discharge of pollutants to surface waters of the state in excess of applicable standards (including, but not limited to, Minn. Rules WPC 14, 15, 24 and 25) . . . or will violate any applicable state rules ~~and regulations~~.

The words "or regulation" are deleted as being redundant.

With this revision, the definition is specifically found to be needed and reasonable. This revision (as well as the revisions proposed by the staff in its attached "Recommendations" section) do not appear to be substantial changes requiring an additional hearing.

2. Recommendation No. 2, page 9, should be amended to read:

3 S.R. 1717, Preamble, paragraph 5, should read:

These rules comply with the policy and purpose of the State of Minnesota in regard to the control of pollution as set forth in Minn. Stat. chs. 115 and 116 (1978). Specifically, these rules are promulgated in accordance with Minn. Stat. §116.07 (1978) and Minn. Stat. §115.03 (1978). Finally, these rules shall have the force and effect of law and shall supersede and replace Minn. Rules SW 51-55 (1971) and Minn. Rules SW 56-61 (1974) ~~upon filing with the Secretary of State~~ twenty days after its publication in the State Register.

In repealing the old rules controlling pollution from animal feedlots, specifically Minn. Rule 54 containing certain location requirements, the Agency will look to local units of government to provide adequate land use planning for residential and agricultural areas. It has been the Agency's experience that residential and agricultural uses of land are often incompatible and that the best forum for resolving the conflicting use of land is at the local level. However, in promulgating these rules the Agency does not seek to abdicate its mandate to protect the purity of the natural resources of the State of Minnesota.

3. Recommendation No. 4, page 10, should be amended to read:

3 S.R. 1718, 6 MCAR §4.8051 B.5. should read:

(5) "~~Certification~~ Certificate of Compliance." A letter from the ~~Agency~~ Director or the County Feedlot Pollution Control Officer to the owner of an animal feedlot stating that the feedlot meets Agency requirements.

4. Recommendation No. 9, page 11, shall be amended to read as follows:

3 S.R. 1718, 6 MCAR §4.8051 B.12., should read:

12. "Interim Permit." A permit issued by the ~~Executive~~ Director ~~of the Agency~~ or the county feedlot pollution control officer which expires no longer than ~~six~~ ten months from the date of issuance.

5. Recommendation No. 24, page 15, shall be amended to read as follows:

3 S.R. 1719, 6 MCAR §4.8051 D.1.c.(3), should read:

(3) A manure management plan including manure handling and application techniques, acreage available for manure application and plans for any proposed manure storage structure. Any plans for manure storage structures of 500,000 gallons capacity or larger shall have been prepared or approved by a registered professional engineer or a ~~qualified government employee. For purposes of this provision, a qualified government employee shall include a Soil Conservation Service employee or a county employee approved by the Agency.~~ Soil Conservation Service employee.

6. Recommendation No. 27, page 16, shall be amended to read:

3 S.R. 1720, 6 MCAR §4.8051 D.2.b.(1) and (2), should read:

(1) An interim permit shall be issued by the Director when the potential pollution hazard will be corrected within ~~six~~ ten months of the date of ~~application~~ permit issuance. When all necessary corrective and protective measures have been installed on a permitted animal feedlot, ~~the Director shall terminate~~ the permit shall terminate and ~~shall issue~~ a ~~certification~~ certificate of compliance shall be issued.

(2) An animal feedlot permit may be issued by the Agency when the potential pollution hazard will not be corrected within ~~six~~ ten months of the date of ~~application~~ permit issuance or when manure is not used as a domestic fertilizer. This permit shall contain such conditions and requirements as the Agency deems necessary in order to ensure compliance with applicable state rules and regulations.

7. Recommendation No. 34, page 18, should be amended to read:

3 S.R.1721, 6 MCAR §4.8052 B.3.(a), should read:

(3) Any county board which has assumed responsibility for processing feedlot permit applications in accordance with 6 MCAR §§4.8052 B.1., may issue, deny, modify, impose conditions upon or revoke interim permits for animal feedlots smaller than 300 animal units where animal manure is used as a domestic fertilizer with a potential pollution hazard which will be mitigated by corrective or protective measures within ~~six~~ ten months of the date of the issuance of the interim animal feedlot permit ~~application~~. These permits shall be issued, denied, modified, have conditions imposed

upon them or revoked in conformance with the following requirements:

a. In order for the county to issue an interim permit:

(1) the Director must receive written notification of the intention of the county to issue an interim permit. Such notification must include the completed permit application, a copy of the draft interim permit proposed for issuance by the county and documentation concerning the potential pollution hazard and the corrective or protective measures to be taken by the owner.

8. Recommendation 39 should be added:

3 S.R. 1720 and 3 S.R. 1722, 6 MCAR §4.8051 and 6 MCAR §4.8052 C relating to Procedural Rules and Appeals should read:

Procedural Rules and Appeals. All requests for hearings, appeals and other procedural matters not specifically provided for herein shall be governed by the Agency Rules of Procedure, the rules of the Office of Hearing Examiners and other applicable ~~laws~~ statutes and rules.

MINNESOTA POLLUTION CONTROL AGENCY

Virgil E. Hamil

~~Art Engelbrecht~~, Chairman

Vice

Terry Hoffman

Terry Hoffman, Executive Director

Dated:

Rules as adopted

MINNESOTA POLLUTION CONTROL AGENCY'S
Rules for the Control of Pollution from Animal Feedlots

Preamble

An adequate supply of healthy livestock, poultry, and other animals is essential to the well-being of Minnesota citizens and the nation. These domesticated animals provide our daily source of meat, milk, eggs, and fiber. Their efficient, economic production must be the concern of all consumers if we are to have a continued abundance of high-quality, wholesome food and fiber at reasonable prices.

However, livestock, poultry, and other animals produce manure which may, when improperly stored, transported, or disposed, negatively affect Minnesota's environment. When animal manure adds to air, water, or land pollution in the State of Minnesota, it must be controlled.

The following rules for the control of livestock, poultry, and other animal manures have been promulgated to provide protection against pollution caused by manure from domesticated animals. However, these rules recognize that animal manure often provides beneficial qualities to the soil and to the production of agricultural crops.

These rules provide for a cooperative program between counties and the Minnesota Pollution Control Agency (hereinafter Agency). County programs, in many instances, represent considerable experience and sensitivity to local agricultural practices and to successful soil and water conservation. Pollution control measures, where deemed necessary by the Agency,

should be individually designed and developed to provide the site specific controls needed for the operation in question. Therefore, a joint county-state program is desirable because it will insure local involvement, minimal disruption to agricultural operations and protect the environment from further degradation.

These rules comply with the policy and purpose of the State of Minnesota in regard to the control of pollution as set forth in Minn. Stat. chs. 115 and 116 (1978). Specifically, these rules are promulgated in accordance with Minn. Stat. §116.07 (1978) and Minn. Stat. §115.03 (1978). Finally, these rules shall have the force and effect of law and shall supersede and replace Minn. Rules SW 51-55 (1971) and Minn. Rules SW 56-61 (1974) twenty days after its publication in the State Register.

In repealing the old rules, controlling pollution from animal feedlots, specifically Minn. Rule 54 containing certain location requirements, the Agency will look to local units of government to provide adequate land use planning for residential and agricultural areas. It has been the Agency's experience that residential and agricultural uses of land are often incompatible and that the best forum for resolving the conflicting use of land is at the local level. However, in promulgating these rules the Agency does not seek to abdicate its mandate to protect the purity of the natural resources of the State of Minnesota.

6 MCAR §4.8051 Rules for the Control of Pollution from Animal Feedlots

A. General Applicability. The provisions of these rules govern the storage, transportation, disposal, and utilization of animal manure and the application for and issuance of permits and certificates of compliance for construction and operation of animal manure management and disposal or utilization systems for the protection of the environment.

B. Definitions. All terms employed in these animal feedlot rules for which definitions are given in Minn. Stat. §§115.07 and 116.06 (1978), shall have the meaning ascribed to them therein. The terms specified below shall have the meanings ascribed to them:

1. "Agency." The Minnesota Pollution Control Agency as established in Minn. Stat. ch. 116 (1978).

2. "Animal Feedlot." A lot or building or combination of lots and buildings intended for the confined feeding, breeding, raising or holding of animals and specifically designed as a confinement area in which manure may accumulate, or where the concentration of animals is such that a vegetative cover cannot be maintained within the enclosure. For purposes of these rules, open lots used for the feeding and rearing of poultry (poultry ranges) shall be considered to be animal feedlots. Pastures shall not be considered animal feedlots under these rules.

3. "Animal Manure." Poultry, livestock or other animal excreta or a mixture of excreta with feed, bedding or other materials.

4. "Animal Unit." A unit of measure used to compare differences in the production of animal manures that employs as a standard the amount of manure produced on a regular basis by a slaughter steer or heifer. For purposes of this rule, the following equivalents shall apply:

Animal	Unit
one mature dairy cow	1.4 animal unit
one slaughter steer or heifer	1.0 animal unit
one horse	1.0 animal unit
one swine over 55 pounds	.4 animal unit
one duck	.2 animal unit
one sheep	.1 animal unit
one swine under 55 pounds	.05 animal unit
one turkey	.018 animal unit
one chicken	.01 animal unit

For animals not listed above, the number of animal units shall be defined as the average weight of the animal divided by 1,000 lbs.

5. Certificate of Compliance." A letter from the Director or the county feedlot pollution control officer to the owner of an animal feedlot stating that the feedlot meets Agency requirements.

6. "Change in Operation." An increase beyond the permitted maximum number of animal units, an increase in the number of animal units which are confined at an unpermitted animal feedlot requiring a construction investment, or a change in the

construction or operation of an animal feedlot that would affect the storage, handling, utilization, or disposal of animal manure.

7. "Corrective or Protective Measure." A practice, structure, condition, or combination thereof which prevents or reduces the discharge of pollutants from an animal feedlot to a level in conformity with Agency rules.

8. "County Feedlot Pollution Control Officer." A county employee or officer who is knowledgeable in agriculture and who is designated by the county board to receive and process animal feedlot permit applications.

9. "Director." The Executive Director of the Minnesota Pollution Control Agency whose duties are defined in Minn. Stat. §116.03 (1978).

10. "Domestic Fertilizer."

a. Animal manure that is put on or injected into the soil to improve the quality or quantity of plant growth, or

b. Animal manure that is used as compost, soil conditioners, or specialized plant beds.

11. "Floodplain." The areas adjoining a watercourse which have been or hereafter may be covered by a large flood known to have occurred generally in Minnesota and reasonably characteristic of what can be expected to occur on an average frequency in the magnitude of the 100 year recurrence interval.

12. "Interim Permit." A permit issued by the Director or the county feedlot pollution control officer which expires no longer than ten months from the date of issue.

13. "Manure Storage Area." An area associated with an animal feedlot where animal manure or runoff containing animal manure is stored until it can be utilized as domestic fertilizer or removed to a permitted animal manure disposal site. Animal manure packs or mounding within the animal feedlot shall not be considered to be manure storage for these regulations.

14. "New Animal Feedlot." An animal feedlot constructed and operated at a site where no animal feedlot existed previously or where a pre-existing animal feedlot has been abandoned or unused for a period of five years or more.

15. "National Pollutant Discharge Elimination System (NPDES) Permit." A permit issued by the Agency for the purpose of regulating the discharge of pollutants from point sources including concentrated animal feeding operations.

16. "Owner." All persons having possession, control, or title to an animal feedlot.

17. "Pastures." Areas where grass or other growing plants are used for grazing and where the concentration of animals is such that a vegetation cover is maintained during the growing season except in the immediate vicinity of temporary supplemental feeding or watering devices.

18. "Permit." A document issued by the Agency, at no charge to the applicant, which contains requirements, conditions and compliance schedules relating to the discharge of animal manure pollutants.

19. "Potential Pollution Hazard." A condition which indicates a potential for pollution of the land or waters of the state including:

a. An animal feedlot or manure storage area whose boundaries are located within shoreland or floodplain, or are located in an area draining directly to a sinkhole or draining to an area with shallow soils overlying a fractured or cavernous rock, or are located within 100 feet of a water well, or

b. An animal feedlot or manure storage area whose construction or operation will allow a discharge of pollutants to surface waters of the state in excess of applicable standards (including, but not limited, to Minnesota Rules WPC 14, 15, 24, and 25) during a rainstorm event of less magnitude than the 25 year - 24 hour event, or will allow uncontrolled seepage of pollutants into the ground water, or will violate any applicable state rules.

20. "Shoreland." Land located within the following distances from the ordinary high water elevation of public waters:

a. Land within 1,000 feet from the normal high watermark of a lake, pond or flowage, and

b. Land within 300 feet of a river or stream or the landward side of floodplain delineated by ordinance on such a river or stream, whichever is greater.

21. "Sinkhole." A surface depression which is connected to a cavernous bedrock (generally limestone) by a channel or collapse of the overlying formation.

C. Animal Feedlot Pollution Control Requirements.

1. No animal feedlot or manure storage area shall be constructed, located or operated so as to create or maintain a potential pollution hazard unless a certificate of compliance or an Agency permit has been issued.

2. All vehicles used to transport animal manure on county, state and interstate highways or through municipalities shall be leakproof. Manure spreaders with endgates shall be in compliance with this provision provided the endgate works effectively to restrict leakage and the manure spreader is leakproof. This shall not apply to animal manure being hauled to fields adjacent to feedlot operations or fields divided by roadways provided the animal manure is for use as domestic fertilizer.

3. Animal manure, when utilized as domestic fertilizer, shall not be stored for longer than one year and shall be applied at rates not exceeding local agricultural crop nutrient requirements except where allowed by permit. Local agricultural crop nutrient requirements can be obtained at local Soil Conservation Service Offices or local Agricultural Extension Service Offices.

4. Any animal manure not utilized as domestic fertilizer shall be treated or disposed of in accordance with applicable state rules and regulations.

5. The owner of any animal feedlot shall be responsible for the storage, transportation and disposal of all animal manure generated in a manner consistent with the provisions herein.

D. Animal Feedlot Permitting Procedure.

1. Animal feedlot permit application requirements.

a. The owner of a proposed or existing animal feedlot for greater than 10 animal units shall make application to the Director for a permit when any of the following conditions exist:

(1) A new animal feedlot is proposed; or

(2) A change in operation of an existing animal feedlot is proposed; or

(3) Ownership of an existing animal feedlot is changed; or

(4) A National Pollutant Discharge Elimination System (NPDES) permit application is required under state or federal rules and regulations.

b. The owner of any animal feedlot shall be required to make an application for a permit when an inspection by

the Agency staff or a county feedlot pollution control officer determines that the animal feedlot creates or maintains a potential pollution hazard.

c. The permit application shall include the following items:

(1) A completed permit application form listing all owners and signed by at least one of the owners, including animal types, the maximum number of animals of each type which can be confined at the animal feedlot, the location of the animal feedlot, soil conditions, and hydrogeological conditions.

(2) A map or aerial photograph showing the location of all wells, buildings, lakes, and watercourses within 1,000 feet of the proposed feedlot.

(3) A manure management plan including manure handling and application techniques, acreage available for manure application and plans for any proposed manure storage structure. Any plans for manure storage structures of 500,000 gallons capacity or larger shall have been prepared or approved by a registered professional engineer or a soil conservation service employee.

(4) Such additional information relating to the specific site or the specific feedlot operation as may be requested by the Director to evaluate compliance with federal and state rules and regulations.

d. When more than one person is in possession, control or has title to a single animal feedlot, only one person needs to apply for an animal feedlot permit, however, the permit application must list all owners in accordance with 6 MCAR §4.8051 D.1.c.(1). All owners are responsible for compliance with these rules and permits or certificates of compliance issued pursuant to these rules.

2. The animal feedlot permit application shall be reviewed by the county feedlot pollution control officer or by the Director if a county permit processing program has not been implemented in the county where the animal feedlot will be located.

a. No permit shall be required when the review of the application indicates that all animal manures are being used as domestic fertilizer and that a potential pollution hazard does not exist or that potential pollution hazards have been satisfactorily addressed by corrective or protective measures. However, a certificate of compliance shall be obtained by the owner of such an animal feedlot prior to commencing operation of the new feedlot, changing the operation of an existing feedlot or changing ownership of an existing feedlot.

b. The Agency shall consider the issuance of a permit when the review indicates that a potential pollution hazard exists and has not been addressed by corrective or protective measures or when manure is not being used as a domestic fertilizer.

EXPENSE

(1) An interim permit shall be issued by the Director when the potential pollution hazard will be corrected within ten months of the date of permit issuance. When all necessary corrective and protective measures have been installed on a permitted animal feedlot, the permit shall terminate and a certificate of compliance shall be issued.

(2) An animal feedlot permit may be issued by the Agency when the potential pollution hazard will not be corrected within ten months of the date of permit issuance or when manure is not used as a domestic fertilizer. This permit shall contain such conditions and requirements as the Agency deems necessary in order to insure compliance with applicable state rules and regulations.

(3) If it is determined during the review process that an animal feedlot must obtain a National Pollutant Discharge Elimination System (NPDES) permit, the applicant shall be notified and a permit shall be processed and issued as prescribed in Minn. Rule WPC 36 (1974).

E. Existing Permits for the Construction and Operation of Livestock Feedlots, Poultry Feedlots and Other Animal Lots. The conditions and provisions of all Agency animal feedlot permits issued under Minn. Rules SW 51-61 before the effective date of these rules shall continue to be in effect. Upon application for

a change in operation or change of ownership of an existing, permitted animal feedlot, the permit shall be reconsidered pursuant to these rules.

F. Procedural Rules and Appeals. All requests for hearings, appeals and other procedural matters not specifically provided for herein shall be governed by the Agency Rules of Procedure, the Rules of the Office of Hearing Examiners and other applicable statutes and rules.

G. Severability. If any provision of this rule or the application thereof to any person or circumstances is held to be invalid, such invalidity shall not affect other provisions of this rule or application of any other part of this rule which can be given effect without application of the invalid provision. To this end the provisions of all sections, subsections and subdivisions herein and the various applications thereof are declared to be severable.

H. Variance from Rules. Any person may apply for a variance from any requirements of this rule. Such variances shall be applied for and acted upon by the Agency in accordance with Minn. Stat. §116.07 subd. 5 (1978) and other applicable statutes and rules.

6 MCAR §4.8052 Rules for the Processing of Animal Feedlot Permit Applications by Counties.

A. General Applicability. Any Minnesota county board may, by resolution, assume responsibility for processing applications

for animal feedlot permits as authorized by Minn. Stat. §116.07 subd. 7 (1978). The provisions of these rules shall govern the exercise of approval and supervising authority by the Agency with respect to the processing of animal feedlot permit applications by a county.

B. County Processing Procedure for Animal Feedlot Permit Applications.

1. Any Minnesota county board desiring to assume responsibility for processing animal feedlot permit applications shall:

a. Submit to the Director a resolution duly adopted by the county board requesting permission to process animal feedlot permit applications in the county. Such resolution shall be accompanied by a statement describing the permit application processing procedure to be used by the county.

b. Receive written approval from the Agency authorizing the processing of animal feedlot permit applications within the county.

c. Designate a county feedlot pollution control officer as having the primary responsibility for the animal feedlot permit program and charge him with the following duties:

(1) Distribute permit application forms made available by the Director to those required to make application for the permit.

(2) Provide, where requested, assistance to applicants to insure that application forms are properly completed.

(3) Receive and review completed application forms and conduct such inspections as necessary to determine if the proposed animal feedlot will comply with applicable state rules and regulations and applicable local ordinances.

(4) Maintain a record of all correspondence and material relating to animal feedlot applications, certificates of compliance, and interim permits issued by the county.

2. The processing of applications for animal feedlot permits by a county board, as defined in Minnesota Statutes §116.07 subd. 7(a), (b), and (c) (1978), shall be accomplished according to the following procedure:

a. For animal feedlots with less than 1,000 animal units where manure is used as a domestic fertilizer and with no potential pollution hazard, the county feedlot pollution control officer shall provide a certificate of compliance to the Agency and the applicant stating that the animal feedlots comply with all aspects of 6 MCAR §4.8051 and that no animal feedlot permit is required.

b. For animal feedlots of less than 300 animal units where manure is used as a domestic fertilizer and where all potential pollution hazards have been mitigated by protective or corrective measures the county feedlot pollution control officer shall provide a certificate of compliance to the Agency and to the applicant stating that the animal feedlots comply with 6 MCAR §4.8051 and that no animal feedlot permit is required.

c. The county feedlot pollution control officer shall forward to the Director, with recommendations and comments, all animal feedlot permit applications which fall within the following categories:

(1) Animal feedlots of 1,000 animal units or more; or

(2) Animal feedlots of more than 300 animal units where a potential pollution hazard has been mitigated through corrective or protective measures; or

(3) Animal feedlots with a potential pollution hazard which has not been mitigated by corrective or protective measures; or

(4) Animal feedlots where manure is not used as domestic fertilizer; or

(5) Animal feedlots for which further technical review is desired by the county feedlot pollution control officer.

3. Any county board which has assumed responsibility for processing feedlot permit applications in accordance with 6 MCAR §4.8052 B.1., may issue, deny, modify, impose conditions upon or revoke interim permits for animal feedlots smaller than 300 animal units where animal manure is used as a domestic fertilizer and with a potential pollution hazard which will be mitigated by corrective or protective measures within ten months of the date of the issuance of the interim animal feedlot permit.

These permits shall be issued, denied, modified, have conditions imposed upon them or revoked in conformance with the following requirements:

a. In order for the county to issue an interim permit:

(1) The Director must receive written notification of the intention of the county to issue an interim permit. Such notification must include the completed permit application, a copy of the draft interim permit proposed for issuance by the county and documentation concerning the potential pollution hazard and the corrective or protective measures to be taken by the owner;

(2) The Director shall, after receipt of written notification of intent to issue an interim permit, review the draft interim permit within 15 days to determine compliance with applicable Agency rules and shall approve, suspend, modify, or reverse the issuance of the interim permit. If the Director approves issuance of the interim permit, the interim permit and a certificate for display shall be returned to the county for issuance to the operator. If the Director suspends, modifies or reverses the issuance of the interim permit, the applicant retains all rights of appeal set out in 6 MCAR §4.8052 C. If the Director fails to act within 15 days after receipt of the draft interim permit from the county, the county may proceed to issue the interim permit.

b. In order for a county to modify or impose conditions upon a interim permit the county shall notify the Director

in writing of its intention to modify or impose conditions upon an interim animal feedlot permit. Such notification must include a copy of the interim permit together with the intended modifications and conditions. The Director shall determine compliance with the provisions of applicable Agency rules and shall either approve, suspend, further modify or reverse the recommended modification or conditions within 15 days of receipt of the aforementioned notice of intent. The county shall be notified of said Agency action. The applicant retains all rights of appeal set out in 6 MCAR §4.8052 C.

c. In order for a county to revoke an interim permit a copy of the interim permit together with a written justification for revocation must be submitted to the Director for review. The Director shall, after receipt of the justification for revocation by the county, review the matter within 15 days to determine compliance with the provisions of applicable Agency rules. The county must receive written approval of the interim permit revocation from the Agency prior to taking action. Where a revocation has been approved by the Agency, the applicant must be informed in writing by the county of the reasons for revocation and the applicant shall retain all rights of appeal set out in 6 MCAR §4.8052 C.

d. In the case of a denial of an interim permit application by the county board, the applicant shall be informed by the county in writing of the reasons for denial and shall be

informed of applicable appeal procedures. The applicant shall retain all rights of fundamental fairness afforded by law and the applicant may make an appeal to the Agency to review the county's action. Such a denial by a county shall be without prejudice to the applicant's right to an appearance before the Agency to request a public hearing or to file a further application after revisions are made to meet objections specified as reasons for denial. The Agency shall approve, suspend, modify or reverse the denial of an interim permit if the matter has been appealed to the Agency.

4. If the county has issued an interim permit, the county feedlot pollution control officer shall terminate the permit and issue a certificate of compliance when all necessary corrective and protective measures have been installed.

5. The Director shall review within 15 days all animal feedlot permit applications forwarded by the county and shall notify the county of the status of the review and of any intended action with respect to all properly completed animal feedlot permit applications.

6. A county no longer wishing to continue in the application review process shall submit a resolution stating its reasons for withdrawal and the effective date of withdrawal to the Director.

7. If the Agency finds that a county program is not meeting the requirements of these rules, the Agency may, after giving the county written notice and an opportunity to respond, revoke its approval of the county's application review authority.

C. Procedural Rules and Appeals. All requests for hearings, appeals and other procedural matters not specifically provided for herein shall be governed by the Agency Rules of Procedure, the Rules of the Office of Hearing Examiners and other applicable statutes and rules.

D. Severability. If any provision of this rule or the application thereof to any person or circumstances is held to be invalid, such invalidity shall not affect other provisions of this rule or application of any other part of this rule which can be given effect without application of the invalid provision. To this end the provisions of all sections, subsections and subdivisions herein and the various applications thereof are declared to be severable.

E. Variance from Rules. Any person may apply for a variance from any requirements of this rule. Such variances shall be applied for and acted upon by the Agency in accordance with Minn. Stat. §116.07 subd. 5 (1978) and other applicable statutes and rules.

APPROVED AS TO FORM AND LEGALITY

NOV 05 1979 19

WARREN SPANNAUS, ATTORNEY GENERAL

BY Joanne Hinderaker

SPECIAL ASSISTANT ATTORNEY GENERAL

STATE OF MINNESOTA
DEPARTMENT OF STATE
FILED
NOV - 5 1979
Joan Anderson Growe
Secretary of State

11:00 a.m.

Our File: #550

STATE OF MINNESOTA

DEPARTMENT Attorney General

Office Memorandum

TO : TERRY HOFFMAN, Executive Director
Pollution Control Agency

Attn: Robert C. Moilanen

DATE: November 5, 1979

FROM : Joanne E. Hinderaker JEH
Special Assistant
Attorney General

PHONE: 296-4692

SUBJECT: Rules as Approved In the Matter of the Proposed Adoption of MCAR 4.8051-4.8052 Constituting Rules for the Control of Pollution From Animal Feedlots and the Repeal of Minn. Rules SW 51-61.

Enclosed herewith are the rules you have submitted for approval. These rules have been approved by this office and filed with the Secretary of State. Note that they have NOT been filed with the State Register; this must be done promptly by your agency.

Upon receipt and before transmittal to your agency, however, it is important that you recheck these rules as to:

1. Affixation of the stamps of the Attorney General and Secretary of State to the last page of the rules;

2. Coverage by these stamps of all rules submitted; and

3. Inclusion of all pages of the rules in the approved set.

Directly following the approved rules is a complete set of required documents and transcript which must be retained with the rules by you or your agency.

If you have any questions in this regard, please contact me.

JEH:mb

Enclosure
cc: Duane Harves
Marshall Whitlock

STATE OF MINNESOTA

COUNTY OF RAMSEY

MINNESOTA POLLUTION CONTROL AGENCY

In the Matter of the Proposed Adoption of MCAR 4.8051-4.8052 Constituting Rules for the Control of Pollution from Animal Feedlots and the Repeal of Minn. Rules SW 51-61

CERTIFICATE OF DELIVERY OF SECRETARY OF STATE'S LIST

I hereby certify that the attached 584 labels and 13 sheets constitute the complete list of persons, associations, and other interested groups who as of 3 o'clock p.m. this 6th day of March, 1979, have requested pursuant to Minn. Stat. §15.0412 subd. 4 (1978) that their names be placed on file with the Secretary of State for the purpose of receiving notice of public hearing on proposed rules on the subject captioned above.

SECRETARY OF STATE

JOAN ANDERSON GROWE

By Joan Anderson Growe

By Kathy Hjelm

TEST PATTERN TEST PATTERN
ADDRESS TEST ADDRESS
CITY TESTCITY MN
55555

TEST PATTERN TEST PATTERN
ADDRESS TEST ADDRESS
CITY TESTCITY MN
55555

TEST PATTERN TEST PATTERN
ADDRESS TEST ADDRESS
CITY TESTCITY MN
55555

TEST PATTERN TEST PATTERN
ADDRESS TEST ADDRESS
CITY TESTCITY MN
55555

TEST PATTERN TEST PATTERN
ADDRESS TEST ADDRESS
CITY TESTCITY MN
55555

TEST PATTERN TEST PATTERN
ADDRESS TEST ADDRESS
CITY TESTCITY MN
55555

TEST PATTERN TEST PATTERN
ADDRESS TEST ADDRESS
CITY TESTCITY MN
55555

TEST PATTERN TEST PATTERN
ADDRESS TEST ADDRESS
CITY TESTCITY MN
55555

TEST PATTERN TEST PATTERN
ADDRESS TEST ADDRESS
CITY TESTCITY MN
55555

TEST PATTERN TEST PATTERN
ADDRESS TEST ADDRESS
CITY TESTCITY MN
55555

AHOLA DEBRA
616 LINCOLN AVE APT 307
ST PAUL MN
55102

ALBERT,AA CALDER CORP
366 JACKSON ST
ST PAUL MN
55101

ALLIN M KARLS
2333 UNIV AVE SE
MPLS MN
55414

ALLENDORF MARSHALL
220 GRAIN EX 400 S 4TH
MPLS MN
55415

ALLERS JOHN
1501 W 80TH ST SUITE210
BLOOMINGTON MN
55431

AMERICAN CAMPING ASSN
4132 88TH LANE
ST PAUL MN
55112

AM INST PROF GEOLOGISTS
2201 PRINCETON AVE
ST PAUL MN
55105

ANCHOR BLOCK COMPANY
PO BOX 3360
ST PAUL MN
55165

ANDERSON DEBRA
1115 E RIVER ROAD
MPLS MN
55414

ANDERSON HERBERT
418 8TH ST. SO.
VIRGINIA MN
55792

ANDERSON HAROLD
BOX 3047
MANKATO MN
56001

ANDERSON JAMES
7703 NORMANDALE RD
MPLS MN
55435

ANDERSON MARY
4425 RUTLEDGE AVE
EDINA MN
55436

ANDERSON STANFORD P
14600 MINNETONKA BLVD
MINNETONKA MN
55343

ANTHONY DICK WDSM RADIO
230 E SUPR ST
DULUTH MN
55102

ARNOLD ROBERT MESPA
41 SHERBURNE
ST PAUL MN
55103

ARROWHEAD ECONOMIC OP AGENCY
CO S BRUSTUN BOX 1066
VIRGINIA MN
55792

ARROWHEAD REG. DEV COMM.
211 W 2ND ST
DULUTH MN
55802

ARROWHEAD REGIONAL DEV COMM
200 ARROWHEAD PLACE
DULUTH MN
55802

ASH GEORGE
3040 OTTAWA STREET
ST LOUIS PARK MN
55416

ASMUSSEN,DENNIS,MPIRG
3036 UNIV AVE SE
MPLS MN
55414

ASSOCIATED GEN CONTROF MN
48 E 8TH STREET
ST PAUL MN
55101

ASSN OF MINN COUNTIES
2305 FORD PKWY
ST PAUL MN
55116

ASSN RESIDENCES FOR RETARDED
452 RICE SUITE 301
ST PAUL MN
55103

BABCOCK LOCHER NELSON ET
118 E MAIN ST
ANOKA MN
55303

BADALICH JOHN P

BARATTO DIVINE M

BARRETT FRED

BADALICH JOHN P
2025 THOMPSON AVE
SO ST PAUL MN
55075

BECK PAT
953 HYACINTH AVE
ST PAUL MN
55106

BERGSETH THOMAS
1011 NICOLLET MALL
MPLS MN
55403

BLADIN PAPER CO W J LICKE
115 1ST ST SW
GRAND RAPIDS MN
55744

BRICK PHILIP D
807 SELLWOOD BLDG
DULUTH MN
55802

BROWN D M GOODRIDGE PUB SCH
IND DIST #561
GOODRIDGE MN
56725

BUSCH NOEL
SUITE 705 510 MARQUETTE
MPLS MN
55402

BABALICH [illegible]
1192 BUSH ST
ST PAUL MN
55106

BEGALKA C REV
212 N ELK ST
BELLE PLAINE MN
56011

BEST FLANAGAN ET AL
4040 IDS CENTER
MPLS MN
55402

BLOMQUIST BARRY L

NORTH BRANCH MN
55056

BRIGGS & MORGAN - R E ERIEL
2200 W 1ST NATL BK BLDG
ST PAUL MN
55101

BROWN H D
4961 KINGSBERRY LANE
MINNETONKA MN
55343

BUCHHOLTZ CHARLES
5044 BRENT AVE E
INV GRV HTS MN
55075

ST LOUIS CO COURT HOUSE
DULUTH MN

BEMIDJI STATE COLLEGE
PLACEMENT BUR.J.C.BRADY
BEMIDJI MN
56601

BEUTEL ROBERT
2200 SILVER LAKE RD
NEW BRIGHTON MN
55112

BLOOMINGTON CITY CLERK
2215 W OLD SHAKOPEE RD
BLOOMINGTON MN
55431

BROEKER JOHN
2850METRO DR. SUITE 504
BLOOMINGTON MN
55420

BRUBACHER RICHARD COMM ADM
209 ADM BLDG
ST PAUL MN
55101

BURGER ALBERT
600 DEGREE OF HONOR BLD
ST PAUL MN
55101

CABLE COMM SYST-H SARRAZIN
BOX 777
HECTOR MN
55342

CARLSON CARL L
7516 80TH ST S
COTTAGE GROVE MN
55016

CHAVARRIA ADAM
1325 W 25TH ST APT 206
MPLS MN
55405

CHRISTIAN SCI COMM ON PUB
1821 UNIV AVE SUITE 271
ST PAUL MN
55104

CITIZENS LEAGUE
530 SYNDICATE BLDG
MPLS MN
55402

[illegible]
2600 109 AVE N W
COON RAPIDS MN
55433

BENDA GEORGE
RURAL ROUTE 1
ALPHS MN
56111

BINGHAM KE CRIM JUSTICE C
351CITY HALL ANNEX
ST PAUL MN
55102

BREHL JAMES W
332 HAMM BLDG
ST PAUL MN
55102

BROOKS WILLIAM F JR
854 MIDLAND BK BLDG
MPLS MN
55401

BRUNING C.R.DEPT.CLINIC.E
BURTON HALL
MPLS. MN
55455

BUR.ENGR.IND.DIV. MR.KIBI
219 N. 2ND ST.
MPLS. MN

CAIN RUTH
730 E 38TH ST
MPLS MN
55407

CAIRNS JOHN A
47TH FLR IDS CENTER
MPLS MN
55402

CHAMBER OF COMMERCE
30 SO 1ST AVE EAST
ELY MN
55731

CHILDS J L
4012 LYNN AVE S
MPLS MN
55416

CITY CLERK
386 CITY HALL
ST PAUL MN
55102

CHERCHES CHRIS CITY MGR
5005 MIKA BLVD
ST LOUIS PARK MN
55416

CHRISTIANSEN FREDRIK
RM 505 CAPITOL SQ BLDG
ST PAUL MN
55155

CITY OF ABERDEEN
CITY HALL
ABERDEEN SD
57401

CARLSON VERNE E
BOX 755 CITY HALL
WILLMAR MN
56201

CARRISON DALE K
MANKATO STATE COLLEGE
MANKATO MN
56001

CHIEF EDITOR ST INFO UNIT
1231 25TH ST NW
WASHINGTON DC
20037

CHRYSALIS CENTER FOR WOME
2104 STEVENS AVE S
MPLS MN
55404

CITY OF ALBERT LEA
221 E CLARK ST
ALBERT LEA MN
56007

CITY OF ALEXANDRIA
114 7TH AVE W BOX 231
ALEXANDRIA MN
56308

CITY OF ANDOVER
1685 CROSSTOWN BLVD NW
ANOKA MN
55303

CITY OF ANOKA
CITY HALL 2015 1ST AVE
ANOKA MN
55303

CITY OF APPLE VALLEY
14200 CEDAR AVE SO
APPLE VALLEY MN
55124

CITY OF BLAINE
9150 CENTRAL AVE NE
BLAINE MN
55434

CITY OF BLOOMINGTON
2215 W OLD SHAKOPEE RD
BLOOMINGTON MN
55431

CITY OF BRAINERD
CITY HALL
BRAINERD MN
56401

CITY OF BRECKENRIDGE
CITY HALL
BRECKENRIDGE MN
56520

CITY OF BROOKLYN CENTER
6301 SHINGLE CREEK PKWY
BROOKLYN CTR MN
55430

CITY OF BROOKLYN PARK
5800 85TH AVE NO
BROOKLYN PARK MN
55443

CITY OF BUFFALO
212 CENTRAL AVE
BUFFALO MN
55313

CITY OF BURNSVILLE
1313 E HWY 13
BURNSVILLE MN
55337

CITY OF CAMBRIDGE
130 E FIRST AVE
CAMBRIDGE MN
55008

CITY OF CARVER COUNTY
600 E FOURTH ST
CHASKA MN
55318

CITY OF CHAMPLIN
12001 HWY 52
CHAMPLIN MN
55316

CITY OF CHANHASSEN
7610 LAREDO
CHANHASSEN MN
55317

CITY OF CHASKA
205 E 4TH ST
CHASKA MN
55318

CITY OF CIRCLE PINES
9201 LEXINGTON AVE NO
CIRCLE PINES MN
55014

CITY OF CLEAR LAKE
ROUTE 1
CLEAR LAKE MN
55319

CITY OF COLUMBIA HEIGHTS
590 40TH AVE NE
COLUMBIA HGHT MN
55421

CITY OF COON RAPIDS
1313 COON RAPIDS BLVD
COON RAPIDS MN
55433

CITY OF COTTAGE GROVE
7516 80TH ST SO
COTTAGE GROVE MN
55016

CITY OF CROOKSTON
PO BOX 374
CROOKSTON MN
56716

CITY OF CRYSTAL
4141 DOUGLAS DRIVE NO
CRYSTAL MN
55422

CITY OF DEEPHAVEN
20225 COTTAGEWOOD RD
DEEPHAVEN MN
55331

CITY OF DETROIT LAKES
106 E HOLMES ST
DETROIT LAKES MN
56501

CITY OF DODGE CENTER
CITY HALL
DODGE CENTER MN
55927

CITY OF DULUTH
CITY HALL
DULUTH MN
55802

CITY OF EAGAN
3795 PILOT KNOB ROAD
EAGAN MN
55122

CITY OF EAST BETHEL
2751 VIKING BLVD NE
WYOMING MN
55092

CITY OF E GRAND FORKS
P O BOX 453
E GRAND FORKS MN
46721

CITY OF EDEN PRAIRIE
8950 EDEN PRAIRIE RD
EDEN PRAIRIE MN
55343

CITY OF EDINA
4801 W 50TH ST
EDINA MN
55424

CITY OF FAIRMONT
114 E 1ST ST
FAIRMONT MN
56031

CITY OF ERIDLEY
6431 UNIVERSITY AVE NE
ERIDLEY MN
55432

CITY OF GOLDEN VALLEY
7800 GOLDEN VALLEY RD
GOLDEN VALLEY MN
55427

CITY OF HAM LAKE
15544 CENTRAL AVE NE
ANOKA MN
55303

CITY OF HASTINGS
100 SIBLEY ST
HASTINGS MN
55033

CITY OF HOPKINS
1010 1ST ST SO
HOPKINS MN
55343

CITY OF HUTCHINSON
37 WASHINGTON AVE WEST
HUTCHINSON MN
55350

CITY OF INVER GROVE HTGS
8659 COURT HOUSE BLVD
INVER GROVE MN
55075

CITY OF JACKSON
CITY HALL
JACKSON MN
56143

CITY OF JORDAN FRANK HOUSER2
10 E 1ST
JORDAN MN
55352

CITY OF LACRESCENT
PO BOX 142
LACRESCENT MN
55947

CITY OF LAKE ELMO
11194 UPPER 33RD ST
LAKE ELMO MN
55042

CITY OF LAKE INDEPENDENCE
RT 1 BOX 123A
MAPLE PLAIN MN
55359

CITY OF LAKEVILLE
8830 207TH ST W
LAKEVILLE MN
55044

CITY OF LITCHFIELD
126 NO MARSHALL
LITCHFIELD MN

CITY OF LITTLE CANADA
515 LITTLE CANADA RD
LITTLE CANADA MN
55117

CITY OF MENDOTA HEIGHTS
BANK BLDG 750 S PLAZA DR
ST PAUL MN
55120

CITY OF MOORHEAD
BOX 779 CITY HALL
MOORHEAD MN
56560

CITY OF NEW BRIGHTON
803 5TH AVE NW
NEW BRIGHTON MN
55112

CITY OF ORONO
PO BOX 66
CRYSTAL BAY MN
55323

CITY OF REDLAKE FALLS
BOX 448
RED LAKE FALL MN
56750

CITY OF ROSEMOUNT
BOX 455
ROSEMOUNT MN
55068

CITY OF ST LOUIS PARK
5005 MINNETONKA BLVD
ST LOUIS PARK MN
55416

CITY OF SHAKOPEE
129 E 1ST AVE
SHAKOPEE MN
55379

CITY OF THIEF RIVER FALLS
BOX 528
THIEF RIVERFA MN
56701

CITY OF WINDOM
444 9TH STREET
WINDOM MN
56101

COLEMAN NICHOLAS
203 STATE CAPITOL
ST PAUL MN
55155

CITY OF LITTLE FALLS
100 7TH AVE NE
LITTLE FALLS MN
56345

CITY OF MORRIS
CITY HALL
MORRIS MN
56244

CITY OF NEW HOPE
4401 XYLON AVE NO
NEW HOPE MN
55428

CITY OF PLYMOUTH
3025 HARBOR LANE
PLYMOUTH MN
55441

CITY OF RICHFIELD
6700 PORTLAND AVE
RICHFIELD MN
55423

CITY OF ROSEVILLE
2701 NO LEXINGTON AVE
ROSEVILLE MN
55113

CITY OF ST PAUL
445 CITY HALL
ST PAUL MN
55102

CITY OF SHOREVIEW
4665 NO VICTORIA ST
SHOREVIEW MN
55112

CITY OF WARREN
CITY HALL
WARREN MN
56762

CITY OF WOODBURY
2100 RADIO DRIVE
WOODBURY MN
55041

COLHAPP TED
1224 VALLEY VIEW ROAD
CHASKA MN
55318

CITY OF MAPLE GROVE
9401 FERNBROOK LANE
MAPLE GROVE MN

CITY OF MINNEPOLIS
3801 66TH AVE NO
BROOKLYN CTR MN
55429

CITY OF MOUNDSVIEW
2401 HWY 10
ST PAUL MN
55113

CITY OF NORTHFIELD
304 SO DIVISION
NORTHFIELD MN
55057

CITY OF PROCTOR
200 2ND ST CITY HALL
PROCTOR MN
55810

CITY OF ROBBINSDALE
4221 LAKE RD
ROBBINSDALE MN
55422

CITY OF ST ANTHONY
2900 KENZIE TERRACE
MPLS MN
55418

CITY OF ST PETER
BOX 270
ST PETER MN
56082

CITY OF SOUTH ST PAUL
125 3RD AVE NO
SO ST PAUL MN
55075

CITY OF WAYZATA
600 RICE STREET
WAYZATA MN
55391

CLARKSON J.B.
2350 I.D.S. CENTER
MINNEAPOLIS MN
55402

COLLIN LAURENCE
RT 2
ISANTI MN
55040

CITY OF MAPLEWOOD
1380 FROST AVE
MAPLEWOOD MN
55109

CITY OF MINNETONKA
74600 MINNETONKA BLVD
MINNETONKA MN
55343

CITY OF MOUNTAIN LAKE
CITY HALL
MOUNTAIN LK MN
56159

CITY OF OAKDALE
1584 HADLEY AVE SO
OAKDALE MN
55119

CITY OF RAMSEY
14100 ST FRANCIS DR
ANOKA MN
55303

CITY OF ROCHESTER
1421 3RD AVE SE
ROCHESTER MN
55901

CITY OF ST CLOUD
CITY HALL
ST CLOUD MN
56301

CITY OF SAVAGE
12305 QUENTIN AVE SO
SAVAGE MN
55378

CITY OF SPRING LAKE PARK
1301 81ST AVE NE
SPRING LAKEPK MN
55432

CITY OF WHITE BEAR LAKE
250 MILLER AVE
WHITE BEAR LK MN
55110

CLAUSEN PHILLIP
2307 STANDISH ST
ST PAUL MN
55108

COMMUNITY DESIGN CENTER
118 E 26TH ST
MPLS MN
55404

CONCORDIA COLLEGE
DEAN
MOORHEAD MN
56560

CONSUMER SERVICES DEPT COMM
5TH FLR METRO SQ BLDG
ST PAUL MN
55101

COL
401
ST P
5510- MN

CRAVEN NORMAN
10637 THOMAS AVE S
BLOOMINGTON MN
55431

CROW WING CO PLANNING & ADV
COURT HOUSE
BRAINERD MN
56401

CUSHMA
700 NIC
MPLS
55402

DAHLKE LOIS M
119 S EAGLE ST
BELLE PLAINE MN
56011

DAILEY THOMAS ECONOMICS LAB
370 WABASHA ST
ST PAUL MN
55102

DANKERS,KENNETH
1200 WEST FOURTH STREET
RED WING MN
55066

DANIELSON RODNEY L
418 AUDITORIUM
ST PAUL MN
55102

DAWSON JEAN MN GOVT REPORT
ROOM 812 CAPITOL
ST PAUL MN
55155

DAYTON CHAS SIERRA CLUB
900 MIDLAND BANK BLDG
MPLS MN
55401

DEVELOP DISABILITIES PROGRAM
STATE PLAN 101 CAP SQ
ST PAUL MN
55155

DICKINSON MRS JOANNE
BOX 1065
MARSHALL MN
56258

DIEHL JOHN
26 KENWOOD PKWY
ST PAUL MN
55105

DISPATCH PIONEER PRESS
PRESS RM STATE CAPITOL
ST PAUL MN
55101

DORSEY MARQUART
2400 1ST NATL BANK BLDG
MPLS MN
55402

DOUGLAS BELL ET AL
2212 AM.NATL BK BLDG
ST PAUL MN
55102

DOW CHEMICAL
47 BLDG
MIDLAND MI
48640

DUNN OLIVER PLUMBERS LOC 15
708 SO 10TH ST
MPLS MN
55404

DUPONT MIKE
5720 EXCELSIOR BLVD
MPLS MN
55416

DZUGAN KEN ST PAUL PLANNI
421 WABASHA ST
ST PAUL MN
55102

E CENTRAL REG. DEV. COMM
COURTHOUSE 10 N VINE ST
MORA MN
55051

EBELING EDWARD H.
161 W. MAIN
PERHAM MN
56573

ECKLUND WM EELLHABER-LARS
W 1080 1ST NATL BANK
ST PAUL MN
55101

EDEVOLD RUTH
PO BOX 248
BEMIDJI MN
56601

EICHTEN DANIEL
3794 HAZEL
WHITE BEAR LK MN
55110

ELDER DR JAMES B
11140 WASHBURN AVE SO
BLOOMINGTON MN
55431

ELDRED R W ARMOUR & CO
UNION STOCK YARDS
SO ST PAUL MN
55075

ELMER EDWIN W
2901 PLEASANT AVE
MPLS MN
55408

EMERICK RICHARD A
1908 IDS TOWER
MPLS MN
55402

ENDERSON WILLIAM
3644 NICOLLET AVE
MINNEAPOLIS MN
55409

ENNIS A F BOISE CASCADE
PO BOX 713
INTL FALLS MN
56649

ENV SERV-GEN RESOURCE CORP
6340 INDUSTRIAL DR
HOPKINS MN
55343

ERDMAN ROGER TENNANT CO
701 N LILAC DR
MPLS MN
55441

ERICKSON BURDETTE ABI CONT
BOX 942
VIRGINIA MN
55792

ERNEST K LEHMANN & ASSOC.
1409 WILLOW ST.
MPLS MN
55403

ESSE KENNETH
4801 W 50TH ST
EDINA MN
55424

ETHICS COMM
RM 410 STATE OFF BLDG
ST PAUL MN
55155

EVANS CHAS.L. PRENTICE-HALL
ENGELWOOD CLIFFS
NEW JERSEY

EWING MRS WM
42 ASTAR RD
BABBITT MN
55706

FABISH MIKE INTL UN OF ENG
307 1ST ST W
VIRGINIA MN
55792

FAEGRE & BENSON ATTN LIBR
1300 NW BANK BLDG
MPLS MN
55433

FARMERS ELEVATOR ASSN
852 GRAIN EXCH BLDG
MPLS MN

FARRELL FRANK [illegible]
RM 1180 176 E 5TH ST
ST PAUL MN
55101

FARRELL EARL [illegible]
WELFARE DEPT 690 N ROBT
ST PAUL MN

FED-ST REPORTS INC MURPHY PP
O BOX 996 COURT H STA
ARLINGTON VA
22216

FELHABER R S
W 1ST NATL BANK BLDG
ST PAUL MN
55101

FILTER LOREN
BOX 36
BRITT MN
55701

FINNEGAN J.R.
55 E. 4TH
ST.PAUL MN
55101

FITZGERALD DR BOB
3007 LYNDALE AVE SO
MPLS MN
55408

FITZPATRICK LEO
8138 HENSLOWE AVE S
COTTAGE GROVE MN
55016

FLEMING FREDERICK A
1860 HIGHLAND PARKWAY
ST PAUL MN
55116

FLADLAND CLINT MN LEP BUR
795 RAYMOND AVE
ST PAUL MN
55114

FORBES GORDON MINN PRS ASSN
203 HANOVER 480 CEDAR
ST PAUL MN
55101

FORSBERG AGR SERV
518 SUMMIT AVE
NEW ULM MN
56073

FORSCHLER RICHARD
1500 NW FIN CENTER
MPLS MN
55431

FOX W.E. LINDQUIST & VENNUM
4200 IDSCTR 80 S.8TH ST
MINNEAPOLIS MN
55402

FRANKLIN ROBERT B MPLS TRIB
426 PORTLAND
MPLS MN
55415

FREDIN CONRAD M
811 FIRST NATL BK BLDG
DULUTH MN
55802

FREDLUND MRS PHYLLIS
RR 4 BOX 37
CANBY MN
56220

FREDRIKSON BYRON ET AL
47TH FLR IDS CENTER M
PLS MN
55402

FRIESEN MILLER A
RAHR BD 624 13TH ST S
VIRIGINIA MN
55792

FRISON FRANK NECA
RM 305 200 SO ROBERT
ST PAUL MN
55107

GALVIN M J JR
W2162 1ST NATL BK BLDG
ST PAUL MN
55101

GARDNER HDW - R A JOHNSON
515 WASHINGTON AVE N
MPLS MN
55401

GEBERT K L
220 GRAIN EXCH
MPLS MN
55415

GEO A HORMEL & CO LAW DEPT
PO BOX 800
AUSTIN MN
55912

GIEL DAVID
RM B-28 STATE CAPITOL
ST PAUL MN
55155

GLEFSON MICHAEL
909 SOC SC BLDG U OF M
MPLS MN
55455

GLEN. HILLS HOSP.R.VAN HA
3901 GOLDEN VALLEY RD.
MPLS. MN
55422

GODIN RALPH J
3824 47TH AVE SO
MPLS MN
55406

GOLDBERG PROF MELVIN
WM MITCHELL COL OF LAW
ST PAUL MN
55105

GOODMAN OF TEL CABLE TV
302 E SUPERIOR
DULUTH MN
55802

GRAHAM THOS H
854 MIDLAND BK BLDG
MPLS MN
55401

GRANATH MARVIN -HONEYWELL
2701 4TH AVE SO
MPLS MN
55408

GREATER MET AREA HOSPITALITY
5152 CEDAR AVE S
MPLS MN
55417

GREEN DEL CITY MGR
BLOOMINGTON CITY HALL
BLOOMINGTON MN
55431

GREEN GARY J
41 SHERBURNE AVE
ST PAUL MN
55102

GREEN JANET
9773 N SHORE DR
DULUTH MN
55804

GRUMMERT REV DONALD
1435 ADAMS ST
MPLS MN
55413

GUSTAFSON WALLACE
BOX 567
WILLMAR MN
56201

H B FULLER CO
2400 KASOTA AVE
ST PAUL MN
55108

HANFT PHILIP M
1200 ALWORTH BLDG
DULUTH MN
55802

HANSON WARREN A SKELGAS
PO BOX 1650
TULSA OK
74102

HAROLD J WESTIN CONSTRUCT
45 E 8TH ST
ST PAUL MN
55101

HARRY RICK
RT 1 BOX 138
KETTLE RIVER MN
55757

HAUN DR J W GEN MILLS
PO BOX 1113
MPLS MN
55440

HAYES,THOMAS W
700 SELLWOOD BLG
DULUTH MN
55812

HART PATRICK V
112 E LIBERTY BOX 3271
MANKATO MN
56001

ST PAUL MN
55102

HEALTH MANPOWER C LARSON
717 DELAWARE ST SE
MPLS MN
55440

HEISENFELT WM
BOX 516
BEMIDJI MN
56601

HINRICHSEN PATRICK
MANKATO FREE PRESS
MANKATO MN
56001

HORNER WALDORF - KAZIUKEWICZ
PO BOX 3260
ST PAUL MN
55165

HULSTRAND ANDERSON & LARSON
PO BOX 130
WILLMAR MN
56201

HYLAND DEAN
1501 W 50TH ST
MPLS MN
55419

INGRAM ALAN NASW MN CH
22 NO DALE ST
ST PAUL MN

IVERSON DR JOS DEPT ED
ST OLAF COLLEGE
NORTHFIELD MN
55057

JASPER GLEN
ROUTE 1
MONTROSE MN
55363

JENSEN MRS GAYNOLD
111 WEST 107TH ST
MPLS MN
55420

JOHNSON G ROBERT
4344 IDS CENTER
MPLS MN
55402

ST PAUL MN
55104

HEANEY BILL
30 W SUPERIOR ST
DULUTH MN
55802

HELTZER JAMES DAYTON HUDSON
777 NICOLLET MALL
MPLS MN
55402

HOLEY GEORGE
1509 SW SIXTH STREET
FARIBAULT MN
55021

HOLT JOHN
517 4TH ST NW
FARIBUALT MN
55021

HUMAN RIGHTS
200 CAPITOL SQ BLDG
ST PAUL MN
55101

IRS EED OF MINN
902 SOO LINE BLDG
MPLS MN
55402

IZAAK WALTON MN DIV
111 E FRANKLIN RM-210
MPLS MN
55404

JENOS INC
525 LAKE AVE SO
DULUTH MN
55801

JOHANSEN BUS SERV INC
19 DAYTON RD
CHAMPLIN MN
55316

JOHNSON LEROY
9939 BLUEBIRD ST NW
COON RAPIDS MN
55433

1007 SOO LINE BLDG
MPLS MN
55402

HEARING EX.OFF. M GREENBERG
1745 UNIV AVE
ST PAUL MN
55104

HENDRICKSON A WM
100 FREEMAN DRIVE
ST PETER MN
56082

HOLMES EUSTIS ET AL
4610 IDS CENTER
MPLS MN
55402

HOULE MELVIN
881 W HWY 96
SHOREVIEW MN
55112

HUSEBYE, CRAIG J.
5036 FRANCE S.
EDINA MN
55410

IMS PAUL

ECHO MN

IRS EED OF MINN
902 SOO LINE BLDG
MPLS MN
55402

JENSEN ARTHUR,CITY CLK
2215 W OLD SHAKOPEE RD
BLOOMINGTON MN
55431

JOHNSON & SANDERSON
ST MARYS HOSPITAL
ROCHESTER MN
55901

JOHNSON M.D. ERUNDT & ERUNDT

BLUE EARTH MN
56013

BOX 584 MENTAL HEALTH
BEMIDJI MN
56601

HEIM PAUL M
3944 IDS CENTER 80 S 8
MPLS MN
55402

HENDRICKSON MRS VIRGINIA
3324 COUNTRY WOOD DR
BURNSVILLE MN
55337

HOPKINS WM.B. DIR.MISCCA
3915 GOLDEN VALLEY ROAD
GOLDEN VALLEY MN
55422

HOUSE APPROPRIATIONS COMM
RM 109 STATE CAPITOL
ST PAUL MN
55101

HUTCHISON R.M. ANOKA CO.C
COURT HOUSE
ANOKA MN
55303

INGEBRIGTSEN DR K H
23 SE 4TH ST
MPLS MN
55414

INTERSTATE POWER RW STEEL
1000 MAIN ST
DUBUQUE IA
52001

JAIN NIRMAL ENIV PROCESS
1220 GLENWOOD AVE
MPLS MN
55405

JENSEN CARL A
127 E MAIN ST
SLEEPY EYE MN
56085

JOHNSON CLARENCE IBEW LU
3615 37TH AVE S
MPLS MN
55406

JOHNSON LANCE J
265 S LAFAYETTE RD
ST PAUL MN
55107

1803 OLSON MEMORIAL HWY
MPLS MN
55411

BETHEL MN
55006

1220 NORTHERN FED BLDG
ST PAUL MN
55102

KEABLE MIKE
909 6TH AVE N
ST CLOUD MN
56301

KEENAN RICHARD J
4444 IDS BLDG
MPLS MN
55402

KJERVIK DIANE
4302 POWEL HALL U OF M
MPLS MN

KLOSTER MARION PEAVEY CO
730 2ND AVE S
MPLS MN
55402

KLUZ STEVEN J
1910 1ST NATL BK BLDG
MPLS MN
55402

KNOPP TIMOTHY
COLLEGE FORESTRY U OF M
ST PAUL MN
55108

KNUTSON DR KEITH, BIOLOGY DPT
ST CLOUD STATE
ST CLOUD MN
56301

KNUTSON R N GRANNIS ETAL
F J SCHULT BLDG
ST ST PAUL MN
55075

KOPP MRS VERNON
2050 65TH ST E
INVER GR HGHT MN
55075

KRAMER ERNEST W
717 DELAWARE ST SE
MPLS MN
55440

KROEGER CHARLES
122 NW 7TH STREET
FARIBAULT MN
55021

KROON H CLIFTON
210 E WALNUT
MANKATO MN
56001

KRONLOKKEN J E
10049 NORD RD
BLOOMINGTON MN
55437

KVB ENGINEERING INC
600 S CO RD 18
MPLS MN
55426

LABELLE JUANITA MRS
5816 AQUILA AVE NO
NEW HOPE MN
55428

LAKE SUPERIOR INDUSTRIAL DUP
828 FIRST AM. BK. BLDG.
DULUTH MN
55802

LANGVIN DAVID
7500 80TH ST S
COTTAGE GROVE MN
55016

LAPP LAZAR LAURIE ET AL
1200 BUILDERS EXCHANGE
MINNEAPOLIS MN
55402

LARSEN C L
3800 MINNEHAHA AVE SO
MPLS MN
55406

LARSON HANS P DIV HOSP SERV
717 DELAWARE ST SE
MPLS MN
55440

LEAGUE MN MUNIC
300 HANOVER 480 CEDAR
ST PAUL MN
55101

LEAGUE WOMEN VOTERS OF MINN
555 WABASHA
ST PAUL MN
55102

LEG.REF.LIB-Z. DEWITT
RM 111 STATE CAPITOL
ST PAUL MN
55155

LEG REPORT SERV-P STURDEVANT
PO BOX 3259
ANNAPOLIS MD
21140

LEVEY JESS MET STATE UNIV
METRO SQ RM 121
ST PAUL MN
55101

LEAVEY THOS
829 22ND AVE SE
MPLS MN
55414

LEWIS DR.G.M JR.
ABBOTT 110 E 18TH ST
MPLS MN
55403

LIBBEY LEONARD
BOX 17011 NOKOMIS STA
MPLS MN
55417

LINDALL & JONATHAN DEVELOP.
VILLAGE ONE CENTER
CHASKA MN
55318

LOCH DAVID REG 5 REG DEV COG
11 IOWA AVE
STAPLES MN
56479

LOCKNER GARY
R R 1 BOX 23
BAUDETTE MN
56623

LOWE DOUG
2701 N LEXINGTON AVE
ROSEVILLE MN
55113

LUTH SOC SERVICE OF MN
2414 PARK AVE
MPLS MN
55404

LYNCH DONALD SIBLEY CO
184 E 6TH ST
ST PAUL MN
55102

MACLIN ALAN ASST ATTY GEN
220 AMERICAN CENTR BLDG
ST PAUL MN
55101

MAHCE RICK CARTER
2850 METRO DR SUITE 431
BLOOMINGTON MN
55420

MALECKI JAMES
1 SO STATE ST
NEW ULM MN
56073

MALONE F J COMM LABOR & INDU
444 LAFAYETTE RD 5TH FL
ST PAUL MN
55101

MANKATO STAT STUDENT SENATE
CENTENNIAL STUDENT UN
MANKATO MN
56001

MANKATO STATE STUDENT ASSN
BOX 59 MANKATO COLLEGE
MANKATO MN
56001

MANTHEY T J PICKANDS MATH
1100 SUPERIOR AVE
CLEVELAND OH
44114

315 PEAVEY BLDG
MPLS MN
55402

320 S 4TH ST
MPLS MN
55415

200 FIRST AVE NW
ROCHESTER MN
55901

MCCLURG EUNICE
1061 109TH AVE NE
BLAINE MN
55434

MCDONALD PHILIP M
2077 SELBY AVE
ST PAUL MN
55104

MCFADDEN G H DISPATCH-PRESS
55 E 4TH ST
ST PAUL MN
55101

MCKIBBON MRS SHIRLEY
11 EVERGREEN LN
BABBITT MN
55706

MCNEILLY GREG MNDSVIEW ED
41 SHERBURNE AVE
ST PAUL MN
55103

MEIEROTTO, JOAN
1794 SO LEXINGTON
ST PAUL MN
55118

MET. WASTE CONTOL COMM.
350 METRO SQ BLG
ST PAUL MN
55101

MET TER MEN ASSN A ROSENTHAL
1821 UNIV AVE
ST PAUL MN
55104

METROPOLITAN COUNCIL LIBR
300 METRO SQUARE
ST PAUL MN
55155

MEYER HERBERT
10824 ZENITH AVE S
BLOOMINGTON MN
55431

MIDLAND GLASS-HD SPURLING
PO BOX 69
SHAKOPEE MN
55379

MILLER M ADMIN AGENCIES DIV
G19K STATE ADM BLDG
ST PAUL MN
55155

MILLER PAUL J PHARMACY SE
ST MARYS HOSP
ROCHESTER MN
55901

MILLER RICHARD A
1020 PLYMOUTH BLDG
MPLS MN
55402

MILLER TOM
2311 PILLSBURY AVE S
MPLS MN
55404

MINN ASPHALT PAVEMENT ASSN
555 WABASHA RM 209
ST PAUL MN
55102

MINN ASSN COOPERATIVES
55 SHERBURNE AVE
ST PAUL MN
55103

MINN ASSN ELEC COOPERATIVES
4901 W 77TH ST
MPLS MN
55435

MINN. ASSN. PET RETAILERS
1115 2ND AVE. SO.
MINNEAPOLIS MN
55403

MINN ASSN VOL SOC SERVICE
1821 UNIV SUITE 389
ST PAUL MN
55114

MINN ASSN WATERSHED DIST*

ADA MN
56510

MINN CHAP ASSOC BLDRS-CONTRS
7204 W 27TH ST
MPLS MN
55426

MINN COMM FOR HANDICAPPED
METRO SQ 492 7TH & ROBT
ST PAUL MN
55101

MINN COMMUNITY DEVELOP SERV
512 ROSSMOR BLDG
ST PAUL MN
55101

MINN DEPT HEALTH J C MCKA
717 DELAWARE S E
MPLS MN
55440

MINNESOTA FARMERS UNION
1717 UNIVERSITY AVE
ST PAUL MN
55104

MINN FOOD RETAILERS ASSN
555 WABASHA
ST PAUL MN
55101

MINN GOV ENG COUNCIL
2400 SHERWOOD HILL RD
MINNETONKA MN
55343

MINN HEREFORD-LJ SCHAFER

BUFFALO LAKE MN
55314

MINN HOSPITAL ASSN
2333 UNIV AVE SE
MPLS MN
55414

MINN. HOTEL & MTR. ASSN
2001 UNIVERSITY AVE
ST PAUL MN

MINN HWYS MANAGEMENT SERVICE
407 HWY BLDG
ST PAUL MN
55101

MINN LAND USE COMMITTEE
4344 IDS CENTER
MPLS MN
55402

MINN LP GAS ASSN
7515 WAYZATA BLVD 106
MPLS MN
55426

MINN.MTR.TRANSP. .J.N.DENN
1821 UNIV.
ST.PAUL MN
55104

MINN MULTIHOUSING ASSN
3100 W LAKE ST
MPLS MN
55416

MINN PETROLEUM COUNCIL
1020 NORTHERN FED BLDG
ST PAUL MN
55102

MINN POLLUTION CONTROL AGCY
1935 W CO RD B2
ROSEVILLE MN
55113

MINN POULTRY & HATCHERY ASSN
BOX 158
MADELIA MN
56062

MINN RESTAURANT ASSN
2001 UNIVERSITY AVE.
ST PAUL MN
55104

MINN RETAIL FEDERATION
180 METRO SQUARE BLDG
ST PAUL MN
55101

MINN RETAIL HARDWARE ASSN
3033 EXCELSIOR BLVD 313
MPLS MN
55416

MINN STATE BAR ASSN
100 MINN FED BLDG
MPLS MN
55402

MINN STATE BD PHARMACY
717 DELAWARE ST SE #351
MPLS MN
55414

MINN STATE EMP UNION COUN
236 E PLATO BLVD
ST PAUL MN
55107

STE 333 AT NATL BK BLDG
ST PAUL MN
55101

MINN. TURKEY GROWERS ASSN
2393 UNIV AVE
ST PAUL MN
55114

MINNESOTA EXPRESS INC
BOX 427
WILMAR MN
56201

MINNESOTA AFL-CIO
175 AURORA AVE
ST PAUL MN
55103

MN PUB INT RESEARCH GROUP
3036 UNIV AVE SE
MPLS MN
55414

MN STATE SER BLIND-K NATARDY
1745 UNIVERSITY AVE
ST PAUL MN
55104

MORTON BUILDINGS INC
R #1
FOLEY MN
56329

MPIRG
BOX 45 ST MARYS COLLEGE
WINONA MN
55987

MT OLIVET ROLLING ACRES
R 1 BOX 576
EXCELSIOR MN
55331

NATL FAMILY INS CO
2147 UNIV AVE
ST PAUL MN
55114

NEUMAN RALPH W
RT 2 BOX 125
EMBARRASS MN
55732

525 JACKSON ST
ST PAUL MN
55101

MINN VETERANS MED ASSN
2175 W HWY 36
ROSEVILLE MN
55113

MIXA FRANK LK MNTKA CONS DIS
402 E LAKE ST
WAYZATA MN
55391

MN.BD OF NURSING
717 DELAWARE ST SE
MPLS MN
55414

MN REP STATE CENTRAL COMM
555 WABASHA AVE
ST PAUL MN
55102

MN WOMEN POLITICAL CAUCAS
1821 UNIV AVE S291
ST PAUL MN
55104

MOSS DR JEROME
125 PEIK 150 PILLSBURY
MPLS MN
55455

MPLS ASSN RETARDED CITIZENS
3100 W LAKE ST
MPLS MN
55416

MURPHY DIANA E
4200 IDS-LINDQUIST VENN
MPLS MN
55402

NASS GEC V HENN CO GEN HOSP
5TH AND PORTLAND AVE
MPLS MN
55415

NCEC INC C/O DR DAHLBERG
CONCORDIA COLLEGE
MOORHEAD MN
56560

NO SUB MONTESSORI-S SADDLER
2497 HELEN COURT
NO ST PAUL MN
55109

2 AVE E
M MN
55413

MINN WATER RESOURCES BD
RM 236 555 WABASHA ST
ST PAUL MN
55102

MN AUTOMOBILE DEALERS ASSN
277 UNIV AVE
ST PAUL MN
55103

MN ELECTRICAL ASSN
3100 HUMBOLT SO
MPLS MN
55409

MN SOC SERV ASS J HOOD
614 PORTLAND
ST PAUL MN
55102

MOFFITT R C
RM 331 M MPLS CITYHALL
MPLS MN
55415

MOSTCA
PO BOX J
PERHAM MN
56573

MPLS STAR PRESS ROOM
STATE CAPITOL
ST PAUL MN
55101

MURPHY PATRICK SSR INC
BOX 286 COURTHOUSE STA
ARLINGTON VA
22216

NATL CAR RENTAL ATT D MITZEL
5501 GREEN VALLEY DR
MPLS MN
55437

NELSON HOWARD I

LINDSROM MN
55045

NORTH CENTRAL ELEC ASSN
PO BOX 202
BATTLE LAKE MN
56515

NW SOY PRODUCERS ASSN
200 CHRISTIE BLDG
DULUTH MN
55802

MINN-WISC BOUNDARY AREA C
600 2ND ST
HUDSON WI
54016

MN. ASN.COIND H.D.PETERSO
480 CEDAR ST.
ST.PAUL MN
55101

MN GRAPHIC DESIGNERS ASSO
PO BOX 24272
MPLS MN
55424

MN ST PHARMACEUTICAL ASSN
2469 UNIVERSITY AVE
ST PAUL MN
55114

MOOD R BLOOMINGTON HLTH D.
10200 PENN SO
BLOOMINGTON MN
55431

MOTOR VEHICLE MFRS ASSN
411 MAIN ST (215)
ST PAUL MN
55102

MPLS TRIBUNE CITY DESK
425 PORTLAND AVE
MPLS MN
55415

MURPHY PATRICK DUFFY
1440 SUMMITT AVE
ST PAUL MN
55105

NATL COUNCIL JEWISH WOMEN
4330 CEDAR LK RD
MPLS MN
55416

NEREA MADONNA
376 NEAL AVE S
AFTON MN
55001

NURSING HOME ADMRS BD EXA
RM 340 717 DELAWARE SE
MPLS MN
55414

315 PEAVEY BLDG
MPLS MN
55402

MCDONALD PHILIP M
2077 SELBY AVE
ST PAUL MN
55104

MEIEROTTO, JOAN
1794 SO LEXINGTON
ST PAUL MN
55118

MEYER HERBERT
10824 ZENITH AVE S
BLOOMINGTON MN
55431

MILLER RICHARD A
1020 PLYMOUTH BLDG
MPLS MN
55402

MINN ASSN ELEC COOPERATIVES
4901 W 77TH ST
MPLS MN
55435

MINN CHAP ASSOC BLDRS-CONTRS
7204 W 27TH ST
MPLS MN
55426

MINNESOTA FARMERS UNION
1717 UNIVERSITY AVE
ST PAUL MN
55104

MINN HOSPITAL ASSN
2333 UNIV AVE SE
MPLS MN
55414

MINN LP GAS ASSN
7515 WAYZATA BLVD 106
MPLS MN
55426

MINN POLLUTION CONTROL AGCY
1935 W CO RD B2
ROSEVILLE MN
55113

MINN RETAIL HARDWARE ASSN
3033 EXCELSIOR BLVD 313
MPLS MN
55416

320 S 4TH ST
MPLS MN
55415

MCFADDEN G H DISPATCH-PRESS
55 E 4TH ST
ST PAUL MN
55101

MET. WASTE CONTOL COMM.
350 METRO SQ BLG
ST PAUL MN
55101

MIDLAND GLASS-HD SPURLING
PO BOX 69
SHAKOPEE MN
55379

MILLER TOM
2311 PILLSBURY AVE S
MPLS MN
55404

MINN. ASSN. PET RETAILERS
1115 2ND AVE. SO.
MINNEAPOLIS MN
55403

MINN COMM FOR HANDICAPPED
METRO SQ 492 7TH E PORT
ST PAUL MN
55101

MINN FOOD RETAILERS ASSN
555 WABASHA
ST PAUL MN
55101

MINN. HOTEL & MTR. ASSN
2001 UNIVERSITY AVE
ST PAUL MN

MINN. MTR. TRANSP. J.N.DENN
1821 UNIV.
ST. PAUL MN
55104

MINN POULTRY & HATCHERY ASSN
BOX 158
MADELIA MN
56062

MINN STATE BAR ASSN
100 MINN FED BLDG
MPLS MN
55402

200 FIRST AVE NW
ROCHESTER MN
55901

MCKIBBON MRS SHIRLEY
11 EVERGREEN LN
BABBITT MN
55706

MET TEP MEN ASSN A ROSENTHAL
1821 UNIV AVE
ST PAUL MN
55104

MILLER M ADMIN AGENCIES DIV
G19K STATE ADM BLDG
ST PAUL MN
55155

MINN ASPHALT PAVEMENT ASSN
555 WABASHA RM 209
ST PAUL MN
55102

MINN ASSN VOL SOC SERVICE
1821 UNIV SUITE 389
ST PAUL MN
55114

MINN COMMUNITY DEVELOP SERV
512 ROSSMOR BLDG
ST PAUL MN
55101

MINN GOV ENG COUNCIL
2400 SHERWOOD HILL RD
MINNETONKA MN
55343

MINN HWYS MANAGEMENT SERVICE
407 HWY BLDG
ST PAUL MN
55101

MINN MULTIHOUSING ASSN
3100 W LAKE ST
MPLS MN
55416

MINN RESTAURANT ASSN
2001 UNIVERSITY AVE.
ST PAUL MN
55104

MINN STATE RD PHARMACY
717 DELAWARE ST SE #351
MPLS MN
55414

MCCLURG EUNICE
1061 109TH AVE NE
BLAINE MN
55434

MCNEILLY GREG MNDSVIEW ED
41 SHERBURNE AVE
ST PAUL MN
55103

METROPOLITAN COUNCIL LIBR
300 METRO SQUARE
ST PAUL MN
55155

MILLER PAUL J PHARMACY SE
ST MARYS HOSP
ROCHESTER MN
55901

MINN ASSN COOPERATIVES
55 SHERBURNE AVE
ST PAUL MN
55103

MINN ASSN WATERSHED DIST*
ADA MN
56510

MINN DEPT HEALTH J C MCKA
717 DELAWARE S E
MPLS MN
5544C

MINN HEREFORD-LJ SCHAFER
BUFFALO LAKE MN
55314

MINN LAND USE COMMITTEE
4344 IDS CENTER
MPLS MN
55402

MINN PETROLEUM COUNCIL
1020 NORTHERN FED BLDG
ST PAUL MN
55102

MINN RETAIL FEDERATION
180 METRO SQUARE BLDG
ST PAUL MN
55101

MINN STATE EMP UNION COUN
236 E PLATO BLVD
ST PAUL MN
55107

STE 900 AM NATL BK BLDG
STPAUL MN
55101

MINN.TURKEY GROWERS ASSN
2383 UNIV AVE
ST PAUL MN
55114

MINNESOTA EXPRESS INC
BOX 427
WILMAR MN
56201

MINNESOTA AFL-CIO
175 AURORA AVE
ST PAUL MN
55103

MN PUB INT RESEARCH GROUP
3036 UNIV AVE SE
MPLS MN
55414

MN STATE SER BLIND-K NATARDY
1745 UNIVERSITY AVE
ST PAUL MN
55104

MORTON BUILDINGS INC
R #1
FOLEY MN
56329

MPIRG
BOX 45 ST MARYS COLLEGE
WINONA MN
55987

MT OLIVET ROLLING ACRES
R 1 BOX 576
EXCELSIOR MN
55331

NATL FAMILY INS CO
2147 UNIV AVE
ST PAUL MN
55114

NEUMAN RALPH W
RT 2 BOX 125
EMBARRASS MN
55732

527 JACKSON ST
ST PAUL MN
55101

MINN VETERANS MED ASSN
2175 W HWY 36
ROSEVILLE MN
55113

MIXA FRANK LK MNTKA CONS DIS
402 E LAKE ST
WAYZATA MN
55391

MN.BD OF NURSING
717 DELAWARE ST SE
MPLS MN
55414

MN BUS SERV ASS J HOOD
614 PORTLAND
ST PAUL MN
55102

MN WOMEN POLITICAL CAUCAS
1821 UNIV AVE S291
ST PAUL MN
55104

MOSS DR JEROME
125 PEIK 150 PILLSBURY
MPLS MN
55455

MPLS ASSN RETARDED CITIZENS
3100 W LAKE ST
MPLS MN
55416

NASS GEC V HENN CO GEN HOSP
5TH AND PORTLAND AVE
MPLS MN
55415

NCEC INC C/O DR DAHLBERG
CONCORDIA COLLEGE
MOORHEAD MN
56560

NO SUB MONTESSORI-S SADDLER
2487 HELEN COURT
NO ST PAUL MN
55109

MN

MINN WATER RESOURCES BD
RM 206 555 WABASHA ST
ST PAUL MN
55102

MN AUTOMOBILE DEALERS ASSN
277 UNIV AVE
ST PAUL MN
55103

MN ELECTRICAL ASSN
3100 HUMBOLT SO
MPLS MN
55408

MOFFITT R C
RM 331 M MPLS CITYHALL
MPLS MN
55415

MOSICA
PO BOX J
PERHAM MN
56573

MPLS STAR PRESS ROOM
STATE CAPITOL
ST PAUL MN
55101

MURPHY PATRICK SSR INC
BOX 206 COURTHOUSE STA
ARLINGTON VA
22216

NATL CAR RENTAL ATT D MITZEL
5501 GREEN VALLEY DR
MPLS MN
55437

NELSON HOWARD I

LINDSROM MN
55045

NORTH CENTRAL ELEC ASSN
PO BOX 222
BATTLE LAKE MN
56515

MSM TBR PRODUCERS ASSN
200 CHRISTIE BLDG
DULUTH MN
55802

MINN-WISC BOUNDARY AREA C
600 2ND ST
HUDSON WI
54016

MN. ASN.COIND H.D.PETERSO
480 CEDAR ST.
ST.PAUL MN
55101

MN GRAPHIC DESIGNERS ASSO
PO BOX 24272
MPLS MN
55424

MN ST PHARMACEUTICAL ASSN
2469 UNIVERSITY AVE
ST PAUL MN
55114

MOOD R BLOOMINGTON HLTH D
10200 PENN SO
BLOOMINGTON MN
55431

MOTOR VEHICLE MFRS ASSN
411 MAIN ST (215)
ST PAUL MN
55102

MPLS TRIBUNE CITY DESK
425 PORTLAND AVE
MPLS MN
55415

MURPHY PATRICK DUFFY
1440 SUMMITT AVE
ST PAUL MN
55105

NATL COUNCIL JEWISH WOMEN
4330 CEDAR LK RD
MPLS MN
55416

NEREN MADONNA
376 NEAL AVE S
AFTON MN
55001

NURSING HOME ADMRS BD EXA
RM 340 717 DELAWARE SE
MPLS MN
55414

111 E FRANKLIN S2ED
MPLS MN
55404

225 S 6TH ST M.E.2011
MPLS MN
55402

802 GRAIN EXCH BLG
MPLS MN
55415

425 WOODLAND AVE
CROOKSTON MN
56716

NYQUIST DEAN A
3707 53RD PL N
BROOKLYN CTR MN
55429

O'BRIEN J.DENNIS
1100 1ST NATL.BANK BLDG
MINNEAPOLIS MN
55402

O'CONNELL RAY
MN GAS CO 733 MARQ AVE
MPLS MN
55402

OFFICE OF THE GOVERNOR
130 STATE CAPITOL
ST PAUL MN
55101

OLDESON ARTHUR MOO & MAINC
927 SOO LINE BLDG
MPLS MN
55402

OTTER TAIL POWER CO.
215 S. CASCADE ST.
FERGUS FALLS MN
56537

PARKER SANDY
7480 CHANHASSEN ROAD
EXCELSIOR MN
55331

PATTISON ORVIS
BOX 645
WILLMAR MN
56201

PAYNE COL ALVIN

DEGRAFF MN
56233

PAYNE WM B
2400 FIRST NATL BK BLDG
MPLS MN
55402

PETERSEN DOUG ESIDE NEIGHBOR
HOOD SERV 1929 2ND STNE
MPLS MN
55418

PETERSON MYRON D
ROUTE 2 BOX 99
SACRED HEART MN
56285

PFEIFER AND SHULTZ, INC
1433 UTICA AVE S
MPLS MN
55416

PHAR MFGRS ASSN WM D PATTON
1155 15TH ST NW
WASHINGTON DC DC
20005

PHILLIPS LEGISLATIVE SERVICE
459 RICE ST
ST PAUL MN
55103

PINNETTI NICK M HALEY & ASS.
40 CENTRAL PARK S
NEW YORK NY
10019

POPOVICH PETER S
314 MINN BLDG
ST PAUL MN
55101

PORTER DAVID
3002 27 AVE S
MPLS MN
55406

PORTER LYLE D

TRACY MN
56175

PORT AUTH CITY OF ST PAUL
330 MINNESOTA BLDG
ST PAUL MN
55101

POSS DONALD G
6301 SHINGLE CREEK PKWY
BROOKLYN CTR MN
55430

POYZER PORT
BOX 675
FERGUS FALLS MN
56357

PRAUSE JOS.C.
2220 105TH AVE.N.W.
COON RAPIDS MN
55433

PRICE WALT C REISS COAL CO
1011 SO 8TH ST
SHEBOYGAN WI
53081

PROCTOR&GAMBLE L THEOHAR
IVORYDALE TECH CENTER
CINCINNATI OH
45217

PULSCHER ROT SPRINGSTED INC
813 OSBORN BLDG
ST PAUL MN
55102

RADMAN RICHARD-LABOR TEMP
418 AUDITORIUM
ST PAUL MN
55102

RALPH BURKE ASSOCIATES
5200 W 73RD ST
MPLS MN
55435

RAMSEY CO MEDICAL SOC
908 AM NATL BK BLDG
ST PAUL MN
55101

RAUENHORSTCORP-RONALD G KIRK
7900 XERXES S S-2200
MPLS MN
55431

REAGAN MICHAEL
% MINN LEARNING CTR
BRAINERD MN
56401

REARDON MRS HELEN
1125 S E 6TH ST
WILLMAR MN
56201

REID DAVID H
6469 N GRAHAM RD
INDIANAPOLIS IN
46220

RED OWL STORES INC
215 E EXCELSIOR AVE
HOPKINS MN
55343

REGION NINE DEV. COMM.
709 S FRONT ST
MANKATO MN
56001

REINO O LAINE 3M COMPANY
3M CENTER
ST PAUL MN
55101

RENNER P.H. ST PAUL APLA CO
300 OSBORN BLDG.
ST PAUL MN
55102

RENQUIST ARTHUR NSP CO
414 NICOLLET MALL
MPLS MN
55401

RICHARDSEN THOS
7951 METRO PKWY S 103
MPLS MN
55420

MPLS MN
55402

ROBERTS DR ALAN
BOX 297 MAYO U OF M
MPLS MN
55455

SPRAGUE CHARLOTTE R
AREA HOSPITAL BOX 339
WINDOM MN
56101

SCHANE ETHEL
1821 UNIVERSITYAVERM389
ST PAUL MN
55104

SCHMIDT WARREN WELLCOME MHS
GARDEN CITY
MN
56034

SCHWERMAN EARL JR
1535 8TH AVE SE
ROCHESTER MN
55901

SCOTT CTY BLDG OFFICIAL
428 SO HOLMES ST
SHAKOPEE MN
55379

SENATE GOV OP COMM
RM 303 STATE CAPITOL
ST PAUL MN
55155

SILVERMAN JUDITH
8545 W 29TH ST
ST LOUIS PARK MN
55426

SMITH BOB III
PIONEER BLDG
ST PAUL MN
55101

SODERBERG HAROLD J
1500 MIDWEST PLAZA BLDG
MPLS MN
55402

MPLS
55440

ROSS ALFRED
6356 WARE RD
LINO LAKES MN
55014

SANFORD S M
7000 PORTLAND AVE
RICHFIELD MN
55423

ST PAUL BUR HLTH DR P COX
555 CEDAR ST
ST PAUL MN
55101

SCHLICHT REV ROBT
611 W MAIN ST
BELLE PLAINE MN
56011

SCHNEIDER MAHLON
GREEN GIANT
LESUEUR MN
56058

SCHWINN ROBT.P.
1400 SOO LINE BLDG.
MPLS. MN
55402

SELECTVISION INC ER VALENTIN
1 DAG HAMMARSKJOLD PL
NEW YORK NY
10017

SHABATURA EUGENE H
2833 LAKE AVE SO
DULUTH MN
55811

SITE ENGINEER INC
12 OLD DEERFIELD RD
WELCH MN
55089

SMITH MICHAEL
75 DE KALB AVE
BROOKLYN NY
11201

SODERMAN ANTHONY
1414 FOSHAY TOWER
MPLS MN
55402

55103

ROSS ROY J
CLK TREAS
LITCHFIELD MN
55355

SAX DOVE & STENSON
310 ENDICOTT BLDG
ST PAUL MN
55101

ST PAUL FOOD RETAILERS ASSN
1220 ARCADE
ST PAUL MN
55106

SCHMIDT H W TCHRS RETIREMENT
302 CAPITOL SQ BLDG
ST PAUL MN
55101

SCHUTZ LINDA
RM 328 CAPITOL BLDG
ST PAUL MN
55155

SCHNEIDER & NEESER
706 1ST ST SO PO BX 876
WILLMAR MN
56201

SENATE COUNSEL OFFICE
ROOM 480 STATE OFF BLDG
ST PAUL MN
55055

SHAW ROBERT M
616 MOBIL OIL BLDG
MPLS MN
55402

SIX EAST REG. DEV. COMM.
311 W 6TH ST
WILLMAR MN
56201

SNELL LYN
BOX 314
EDEN VALLEY MN
55329

SOUTHERN MINN LEGAL SERVICES
400 EXCHANGE BLDG
WINONA MN
55987

55402

SE MN REG DEV COMM
301 MARQ BK BLDG
ROCHESTER MN
55901

SCARBOROUGH WILLIAM
DIV.ED. U.M.
MORRIS MN
56267

SCHMIDT LARRY WCCO-TV NEW
50 S 9TH ST
MPLS MN
55402

SCHWARTAU NEAL METH HOSP
201 W CENTER ST
ROCHESTER MN
55901

SCHROEDER ALFRED H
2172 CARROLL AVE
ST PAUL MN
55104

SENATE FINANCE COMMITTEE
ROOM 121 STATE CAPITOL
ST PAUL MN
55155

SIAS JACK W
BOX 4366-1573 SELBY AVE
ST PAUL MN
55104

SMERIKA WM.
BOISE CASCADE PAPERS
INTL FALLS MN
56649

SNYDER, R.W. U OF M
RM 248C CLASS OFF BLDG.
ST PAUL MN
55108

SOUTHWEST REGIONAL DEV CO
25TH & BROADWAY
SLAYTON MN
56172

3252 DUPONT AVE SO
MPLS MN
55408

PO BOX 116
MPLS MN
55440

1101-15TH NW
WASHINGTON DC
20005

STATE SD VETERINARY EXAMI
C/O DR A C SPANNAUS DVM
WACONIA MN

STATE OF MN BLDG CODE DIV
408 METRO SQ BLDG
ST PAUL MN
55101

STD AM LIFE & ANNUITY CO
3801 W 50TH ST
MPLS MN
55410

STEELWORKERS CREDIT UNION
BOX 250
BABBITT MN
55706

STOLPESTAD BROWN & SMITH
1550 NW BK BLDG
ST PAUL MN
55101

STUPKA & MOREM
MIDTOWN BLDG
AUSTIN MN
55912

SULLIVAN J KIRK
PO BOX 200
BOISE ID
83701

SULLIVAN JEANETTE
CDIC SW STATE UNIV
MARSHALL MN
56258

SUMMIT NATL BANK D L MORR
205 AURORA AVE
ST PAUL MN
55103

SUSSEL CO.ATTN:TED SCHWENKER
1850 COMO AVE.
ST PAUL MN
55108

SWANSON MORTIMER C
5824 FRANCE AVE S
EDINA MN
55410

TATE VERN 3M CO
3M CENTER 220/6W
ST PAUL MN
55101

TENNESSEN SEN ROBERT J
RM 309 STATE CAPITOL
ST PAUL MN
55155

THORNTON PETER J BLDG UN 599
107 SO 15TH AVE W
VIRGINIA MN

TIMESAVERS INC ATT R S VOLD
5270 HANSON COURT
MPLS MN
55422

TOWNSHIP OF WHITE BEAR
1281 HAMMOND RD
WHITE BEAR LK MN
55110

TWIN CITIES PIPING IND AS
2829 UNIV SE SUITE 304
MPLS MN
55414

UNION STOCK YARDS
ATTN PRES
SO ST PAUL MN
55075

UTLEY JOHN
4610 IDS CENTER
MPLS MN
55402

VANDERVOORT T J MET WASTE
350 METRO SQUARE BLDG
ST PAUL MN
55101

VAN DRAKE STEPEN R
PO BOX 2134
TRIPOLI LIBYA N
ARAB

VAN EVERA MUNDT ET AL
700 TORREY BLDG
DULUTH MN
55802

VERRILL JOHN E
DEPT SECONDARY ED UOF M
DULUTH MN
55812

VIITALA, W.C. HONEYWELL
HONEYWELL PLAZA
MPLS MN
55408

VILLAGE OF WOODBURY
2100 RADIO DRIVE
WOODBURY MN
55042

VOSS REV GORDON D
11120 NE 7TH ST
BLAINE MN
55434

VOS LEROY
2137 BURNS AVE
ST PAUL MN
55119

WALTERS THOMAS MN MFG HOUSE
4530 W 77TH ST STE 227
MPLS MN
55435

WALZ SAM CO ADMINISTRATION
ANOKA CTY COURTHOUSE
ANOKA MN
55303

WAMPLER LINUS DIR USW OF
609 PROVIDENCE BLDG
DULUTH MN

WANQUIST ALLEN
RM 252 FEDERAL BLDG
ST PAUL MN
55101

WASHINGTON COUNTY
14900 61ST ST NO
STILLWATER MN
55082

WATERS, DONNA M.
110536 WINDMILL COURT
CHASKA MN
55318

WELK G V NORTHERN STATES
414 NICOLLET MALL
MPLS MN
55401

WEST CENTRAL REG. DEV.
ADM BLDG,COMMUNITY COLL
FERGUS FALLS MN
56537

WHITLOCK A G
COM LAB OSBORN BLDG
ST PAUL MN
55102

WHITLOCK MARSHALL
RM 433 STATE OFFICE BLD
ST PAUL MN
55155

WHITING RALPH
7316 BAILEY ROAD
NEWPORT MN
55055

WEST CENTRAL REG. DEV.
ADM BLDG.COMMUNITY COLL
FERGUS FALLS MN
56537

WILCOX J PATRICK
1220 NORTHERN FED BLDG
ST PAUL MN
55102

WILSON R GARY PPG INDUSTR
1 GATEWAY CENTER
PITTSBURGH PA
15222

WRIGHT CO COMMUNITY SERVICES
7NW 1ST ST
BUFFALO MN
55313

ECON LAB OSBORN BLDG
ST PAUL MN
55102

WM.MITCHEL COLLEGE LAW LIB.
2100 SUMMIT AVE.
ST.PAUL MN
55105

WIS FEEDER PIG MARKET CO-OP

FRANCIS CREEK WI

WYANT CLINTON W ATTY

ATKIN MN
56431

ZACHARY LOUIS L
9809 BEARD AVE
BLOOMINGTON MN
55431

ST PAUL MN
55155

WILEY ENTERPRISES
101 5TH AVE SE
OSSEO MN
55369

WOLKERSTORFER THEODORE
676 17TH AVE NW
NEW BRIGHTON MN
55112

ZIMMERMAN & DEERMAN
CAMBRIDGE STATE HOSP
CAMBRIDGE MN
55008

NEKPLNT
55055

WILLETTE MARY
2711 W 47TH STREET
MPLS MN
55410

WOZNIAK D D
401 FIRST FED BLDG
ST PAUL MN
55101

TEST PATTERN TEST PATTERN
ADDRESS TEST ADDRESS
CITY TESTCITY MN
55555

TEST PATTERN TEST PATTERN
ADDRESS TEST ADDRESS
CITY TESTCITY MN
55555

TEST PATTERN TEST PATTERN

Litchfield, MN 55355

Arthur Ennis
Planning Commission Chairman
Shorewood Drive
International Falls, MN 56649

Duane Betker
Planning Commission Chairman
Star Route
Onamia, MN 56359

William M. Borchert
Planning Commission Chairman
Mentor, MN 56736

V. Joseph Nosek
Planning Commission Chairman
Lax Lake Road, Box 108-A
Silver BAy, MN 55614

JohnW. Hohncke
Planning Commission Chairman
Camp Ripley
LittleFalls, MN 56345

Robert McCrory
Planning Commission Chairman
R. R. 1
Glenwood, MN 56334

Al Francisco
Planning Commission Chairman
R. R. 1
Baudette, MN 56623

Merrill Chesebrough
Planning Commission chairman
Le Roy, MN 55951

Willard Purath
Planning Commission Chairman
R. R. 1
Red Lake Falls, MN 56750

Carl Fahning
Planning Commission Chairman
Route 1
Cleveland, MN 56017

Herbert F. Johnson
Planning Commission Chairman
Hadley, MN 56133

Ronald Holmberg
Planning Commission Chairman
R.R. 1
Vesta, MN 56292

Pat Krick
Planning Commission Chairman
City Hall
Lake Benton, MN 56149

Melvin Schiller
Planning Commission Chairman
Route 1
Courtland, MN 56021

Odean Skalbeck
Planning Commission Chairman
Route 2
Sacred Heart, MN 56285

James Ulvilden
Planning CommissionChairman
Russell, MN 56169

Earl Newburn
Planning Commission Chairman
RFD 1
Rushmore, MN 56168

Larry Richie
Planning Commission Chairman
Route 2
Faribault, MN 55021

Mr. Richar Larson
Planning Commission Chairman
Mahnomen, MN 56557

Elvin Blomseth
Planning Commission Chairman
Twin Valley, MN 56584

John Flanigan
Planning Commission Chairman
Route 1
Magnolia, MN 56158

Julius Klienwacher
Planning Commission Chairman
Strandquist, MN 56578

William Aylsworth
PlanningCommission Chairman
500 - 33rd St. SW
Rochester, MN 55901

Robert Olson
Planning Commission Chairman
Tower, MN 55790

Alfred Rieke
Planning Commission Chairman
Truman, MN 56088

Charles Davis
Planning Commission Chairman
Parkers Prairie, MN 56361

Wilfred Lucas
Planning Commission Chairman
RFD 1
Jordan, MN 55352

Milan Bonniwell
Planning Commission Chairman
Route 1

Curtis Swanson
Planning Commission Chairman
Route 2

David Simonson

Klien Johnson
Planning Commission Chairman
Chisago City, MN 55013

L.W. Grinolds
Planning Commission Chairma
Box 234
Glenville, MN 56036

Edward F. Fields
Planning Commission Chairman
15421 Round Lake Blvd.
Anoka, MN 55303

Mrs. W.F. Lasky
Planning Commission Chairman
Route 3
Moorhead, MN 56560

Merle Schwartau
Planning Commission Chairma
R.R. 4
Red Wing, MN 55066

Donald Schattschneider
Planning Commission Chairman
R.R. 4
Detroit Lakes, MN 56501

Ed Rasmussen
Planning Commission Chairman
Bagley, MN 56621

Dean Olson
Planning Commission Chairma
Elbow Lake, MN 56531

Bernard Palmer
Planning Commission Chairman
Royalton, MN 56373

Daniel Kehoe
Planning Commission Chairman
Courthouse
Grand Marais, MN 55604

Irving Ingvalson
Planning Commission Chairma
Caledonia, MN 55921

Lawrence Fossen
Planning Commission Chairman
Clinton, MN 56225

Leslie P. Reynolds
Planning Commission Chairman
P.O. Box 156
Westbrook, MN 56183

James Murphy
Planning Commission Chairma
613 North Main
Park Rapids, MN 56470

Arno Proehl
Planning Commission Chairman
209 - 2nd Ave. SE
Kapleton, MN 56065

Merle Hansen
Planning Commission Chairman
1523 Pennsylvania Ave.
Brainerd, MN 56401

Laurence Collin
Planning Commission Chairma
Route 2
Isanti, MN 55040

Orville Olson
Planning Commission Chairman
Route 1
Hanska, MN 56041

Paul H. Junkel, Jr.
Planning Commission Chairman
381 Rehnberg Place
W. St. Paul, MN 55118

Horace Barnes
Planning Commission Chairma
Route2
Bocey, MN 55709

Kenneth Hebert
Planning Commission Chairman
23 Sunnyside Circle
Cloquet, MN 55720

Alan Knobel
Planning Commission Chairman
R.R.
West Concord, MN 55985

Ray Palmby
Planning Commission Chairma
912 Douglas Street
Lakefield, MN 56150

Eldon Herrmann
Planning Commission Chairman
Route 1
Hamburg, MN 55339

W.F. Myren
Planning Commission Chairman
Miltona, MN 56354

Ruben Falk
Planning Commission Chairma
Route 2
Mora, MN 55051

Al Larson
Planning Commission Chairman
Schley Route
[illegible], MN 56633

Howard Zierke
Planning Commission Chairman
[illegible]FD
[illegible], MN [illegible]

Harlin Madsen
Planning Commission Chairma
Blomkest, MN 56216

Atwater, MN 56209

Izaak Walton League
New London Chapter
Richard W. Anderson, Sec.
Box 38
New London, MN 56273

Mrs. Delbert Allinder, Pres.
League of Women Voters
801 West 17th Street
Willmar, MN 56201

Mrs. James D. Gray, Pres.
League of Women Voters
98 Hays Circle
Silver Bay, MN 55614

Mr. Eugene Blaschko, Se.
Izaak Walton League
Le Center, MN 56057

Mrs. Richard Tillemans, Pres.
League of Women Voters
Route #2
Marshall, MN 56258

Mrs. Tom Cone, Pres.
League of Women Voters
1115 Jorgenson Street
Hutchinson, MN 55350

Clearwater Lake Property
Owners, Inc.
c/o Stuart Steelman
Route 3
Annandale, MN 55302

Little Falls Sportsmen's Club
Jack V. Bares, Sec.
213 SE Third Street
Little Falls, MN 56345

ochester, MN 55901

Mr. Harry L. Buck
Izaak Walton League
Rochester Chapter
[illegible], MN 55901

Rochester, MN 55901

Mr. Robert A. Anderson
Ottertail Lake Prop. Owners Assn
Battle Lake, MN 56515

Stalker Lake Sportsmen's Club
Hollis Alfredson, Sec.
Battle Lake, MN 56515

Pelican Lake Assn.
Box 152
R.R. 2
Pelican Rapids, MN 56672

Mr. Delmar Hagen, Pres.
Red Lake Watershed District
Gatzke, MN 56724

Mrs. Stanley Sahlstrom, Pres.
League of Women Voters
106 Golf Terrace
Crookston, MN 56716

Mrs. William Atkins, Pres.
League of Women Voters
3495 North Chatsworth
St. Paul, MN 55112

Mrs. Warren J. Michael, Pres.
League of Women Voters
1454 Skiles Lane
St. Paul, MN 55112

Mrs. Rodney Olsen, Pres.
League of Women Voters
1831 Asbury
St. Paul, MN 55113

Mrs. Wayne Burmeister, Pres.
League of Women voters
7565 Englewood
[illegible], MN [illegible]

Route 3, Box 167
Prior Lake, MN 55372

Mr. Joseph Ling, Ph.D., Dir
Env. Eng. & Pollution Contr
3-M Co., Bldg. 42-2W
P.O. Box 33331
St. Paul, MN 55133

L.H. Mikeworth, Sec.
White Bear Lake Area Indust
Development Corporation
702 Third Street
White Bear Lake, MN 55110

Casimer Lubansky, Pres.
Lower MN River Watershed Di
315 East Third
Chaska, MN 55318

Mrs. Lester Ristinen, Pres.
League of Women Voters
Route 2, Box 165
Fergus Falls, MN 56537

Lawrence E. Samstad, Eng.
Lower MN River Watershed Di
Box 277
Cokato, MN 55321

Lawrence E. Kelly, Pres.
Minnehaha Creek Watershed D
4200 Cedarwood Road
St. Louis Park, MN 55416

[illegible], MN [illegible]

Mrs. J. Richard Clague
League of Women Voters
1576 - 21st Avenue NW
New Brighton, MN 55112

Mr. Milo Ayer, Pres.
Buffalo Creek Watershed Dist
Glencoe, MN 55336

Mr. John De Ruyter, Sec.
Town & Country Sportsmen's C
Renville, MN 56284

Winona, MN 55987

Bernard Munsterteiger

National Wildlife Federation
1825 Nevada Ave. S.
St. Louis Park, MN 55426

Bob Gambrino
Planning Commission Chairman
Box 743
St. Cloud, MN 56301

Russ Hatling
MECCA
144 Melbourne Ave. SE
Minneapolis, MN 55414

Kathy Staska
Planning Commission Chairman
560 E. Prospect,
Owatonna, MN 55060

Arnold Anderson
Planning Commission Chairman
Echo, MN 56237

Karen Loechner
MEEB
257 Hennepin Square Buildin
2021 E. Hennepin
Minneapolis, MN 55413

tom Cunningham
Planning Commission Chairman
Hancock, MN 56244

Bernard Munsterteiger
Planning Commission Chairman
103 Rosewood Drive
Buffalo, MN 55313

Dr. Rodney Loper
528 Sixth Avenue SE
Minneapolis, MN 55413

Ruben C. Kuehne
Planning Commission Chairman
Route 3
Long Prairie, MN 56347

Anthony Moe
Planning Commission Chairman
Sturgeon Lake
Minnesota 55783

John Motl
MPIRG
3036 University Ave. SE
Minneapolis, MN 55414Mr. F

Allyn Stoltz
Planning Commission Chairman
Plainview, MN 55964

Lawrence Nordwall
Planning Commission Chairman
Route 2
Zimmerman, MN 55398

Mr. Kenneth Cruikshank, Sec
Izaak Walton League
Owatonna Chapter
416 S. Cedar Avenue
Owatonna, MN 55060

John Strottberg
Planning Commission Chairman
Route 2
Wadena, MN 56482

David Simonson
Planning Commission Chairman
Star Route
Isle, MN 56342

Mr. Nels F. Thorsson
Straight River Committee
Route 2
Owatonna, MN 55060

A.T. Pogreba
Planning Commission Chairman
201 Fourth Ave. NW
Waseca, MN 56093

Thomas J. Ketelson
Planning Commission Chairman
Route 2
Montevideo, MN 56256

Mr. Harry L. Buck
Quarry Hill Nature Center
701 Silver Creek Road NE
R.R. 1
Rochester, MN 55901

William Lundquist
Planning Commission Chairman
5744 Lake Elmo Ave. N.
Lake Elmo, MN 55042

Orval Ardahl
Planning Commission Chairman
Lanesboro, MN 55949

Howard Peterson, Pres
Riley-Purgatory Creek Waters
District
7021 Duck Lake Road
Eden Prairie, MN 55343

Dale Schutz
Planning Commission Chairman
Route 1
st, James, MN 56081

Marge Christenson
MECCA
26 E. Exchange
P.O. Box 80089
St. Paul, MN 55101

Mr. Milton R. Christensen, P
Sewer Planning & Des. Eng.
Dept. of Public Works
1800-A Government Center
Minneapolis, MN 55487

Michael Hasbargen
Planning commission Chairman
R.R.

Julie Copeland
ECOL
Minneapolis Public Library
300 Nicollet Mall
Minneapolis, MN 55413

Herbert D. Reimer
Box 779
Moorhead, MN 56560

Brainerd, MN 56401

Greyhound Tower, Room 907
Phoenix, Arizona 85077

Mr. E.D. Zimmer, Pres.

Melville Holmquist
1846 James Avenue
St. Paul, MN 55105

Alfred Starz, Pres.
Bear Valley Watershed Distri
Zumbro Falls, MN 55991

Roger A. Peterson
Peterson, Engberg & Peterson
700 Title Insurance Building
Minneapolis, MN 55401

Mr. Robert Farrell, Pres.
Belle Creek Watershed Distri
Goodhue, MN 55027

Mr. R.L. Fitzgerald, Pres.
Dilworth Hook & Bullet Club
Dilworth, MN 56259

Eugene Grazzini, Pres.
Alimagnet Lake Association
14133 Frontier Lane
Burnsville, MN 55373

Mr. Milton R. Christensen

Benjamin J. Blacik
General Attorney
U.S. Steel Corp.
800 Missabe Building
Duluth, MN 55802

Mr. E.S. Crozier, Chr.
Burnsville Env. Adv. Council
60 Oak Shore Drive
Burnsville, MN 55414

SSECO
Ford Motor Company
628-W, One Parklane Blvd.
Dearborn, Michigan 48126

Charles W. Huver, Ph.D.
James Ford Bell Museum of
Natural History U of MN
Minneapolis, MN 55455

Chr., Natural Res. Commission
c/o Planning Dept.
City of Bloomington, City Hall
2215 West Old Shakopee Road
Bloomington, MN 55431

League of Women Voters
555 Wabasha
St. Paul, MN 55102

Gene Uglem, Sec.
Cuyuna Range Conservation Club
Crosby, MN 56441

Mrs. Samuel Poppleton, Pres.
League of Women Voters
11009 London Drive,
Burnsville, MN 55378

Mr. James A. Jones
9 Mi. Creek Watershed Distri
8900 Normandale Road
Bloomington, MN 55431

Landis Gryte, Sec- Treas.
Sibley Lake Prop. Owners Assn.
Route 2
Pequot Lakes, MN 56472

Mrs. Gerald Helmken, Pres.
League of Women Voters
1309 Ninth Avenue South
S. St. Paul, MN 55075

D.L. Parker, Sec.
Ossawinnamakee Lakes Cons. Club
Pequot Lakes, MN 56472

Richard W. Ruble, Sec.
Turtle Creek Watershed District
Route 4, Box 224
Austin, MN 55912

Gilbert W. Harries
Hanft, Fride, O'Brien &
Harries, P.A.
1200 Alworth Building
Duluth, MN 55802

MN Wildlife Env. League
Attn: Kenneth Morgan, Ex. Sec.
Deerwood, MN 56444

Harley Miller
R.R. #3, Box 93
Albert Lea, MN 56007

Donald A. Rivard, Pres.
Middle River-Snake River
Watershed District
Argyle, MN 56713

Donald J. Iverson, Sec.
Cross Lake Game & Fish Club
Cross Lake, MN 56442

Mrs. Victoria Ritter
Kandiyohi Lake Association
804 South Ninth Street

William J. Patnaude
Zoning Administrator
P.O. Box 248
Bemidji, MN 56601

Ernest Schober
Area Conservationist
Federal Building, Room 113
515W. First Street
Duluth, MN 55802

Ms. Sharon Peterson
Red Lake Watershed District
309 LaBree Ave. N.
Thief River Falls, MN 56701

Aqua Tech, Inc.
140 South Park Street
Port Washington,
Wisconsin 53074

Willard Peterson, PE
Consulting Engineer
160 W. Cook Lake Road
Duluth, MN 55803

Ms. Barbara Speck
Turtle, Ten Lakes, Sugar Bush
Frohn Environmental Association
Route 4
Bemidji, MN 56601

Mrs. Frederick Wolner, Pres
League of Women Voters
320 Second Street
Cloquet, MN 55720

Thomas W. Segar
Technical Director
K-REN Corporation
P.O. Box4 418
S. St. Paul, MN 55075

Mr. Charles H. Feuesman, Dir.
Center for Env. Studies
Bemidji State College
Bemidji, MN 56601

Mr. Harold Westholm, Act. D
Windemere-Moose Lake San. D
604 West Road
moose Lake, MN 55767

Mr. Alfred Fischer
Area Conservationist
Room 301, Earle Brown Tower
5120 Earle Brown Drive
Brooklyn Center, MN 55430

Ms. Marie Schleuger, Sec.
Citizens Env. Association
Route 3, Box 282
Bemidji, MN 56601

Mr. L. P. Gisvold, Pres.
Leech Lake Assn., Inc.
Walker, MN 56484

Dr. Richard Maierotto
13900 44th Street South
Afton, MN 55001

Mendick Hardware
Main & Margret
Blackduck, MN 56630

Mr. Jake N. Licke, Pres.
Walker on Leech Lake Chapte
Izaak Walton League
R.R. 2
Nevis, MN 56467

Ms. Barbara Reinert, Pres.
League of Women Voters
V.A. Hospital Site
St. Cloud, MN 56301

Mr. A. Mattioli, Sec.
Izaak Walton League
Star Route
Walker, MN 56484

Mr. Richard J. Gunn
Attorney at Law
215 Peavey Building
Minneapolis, MN 55402

Benton County Park &
Recreation Board
Foley, MN 56329

Mrs. Tom Grandy, Pres.
League of Women Voters,
Cass Lake, MN 56633

Daniel C. Lucas
13346 Riverview Drive
Elk River, MN 55330

Mrs. morris Midboe, Pres.
League of Women Voters
813 Seventh Street
Granite Falls, MN 56241

St. Paul, MN 55109

Room 111
Duluth, MN 55812

Wadena, MN 56482

Dave E. Kabes
County Extension Office
Red Lake County Courthouse
Red Lake Falls, MN 56750

David D. Hart
County Extension Office
123 - 1st Street E.
Jordan, MN 55352

Roger M. Wilkowske
County Extension Office
122 - 3rd Ave. NW - Box 70
Waseca, MN 56093

Glen E. Ertel
County Extension Office
Sherburne County Courthouse
433 Jackson Ave.
Elk River, MN 55330

Malcolm F. Barlass
County Extension Office
6081 Oxboro Ave. N.
Stillwater, MN 55082

Floyd W. Jorgensen
County Extension Office
Red Lake Indian Reservation
Red lake, MN 56671

John W. Peterson
County Extension Office
Sibley County Courthouse
Gaylord, MN 55334

Ernest D. Johnson
County Extension Office
Redwood County Courthouse
Redwood Falls, MN 56283

Francis J. Januschka
County Extension Office
2700 First St. N.
St. Cloud, MN 56301

John I. Ankeny
County Extension Office
Watonwan County COurthouse
St. James, MN 56081

Patrick J. Maher
County Extension Office
Renville County Courthouse
Olivia, MN 56277

Larry A. Tande
County Extension Office
County Administrative Annex
590 Dunnell Drive
Owatonna, MN 55060

Raymond B. Thompson
County Extension Office
Wilkin County COurthouse
Breckenridge, MN 56520

Warren F. Liebenstein
County Extension Office
Rice County Courthouse
Faribault, MN 55021

Catherine J. Huebner
County Extension Office
Agricultural Service Center
Hwys. 59 & 28 North
Morris, MN 56267

Neil R. Broadwater
County Extension Office
Winona County COurthouse
Winona, MN 55987

Byron R. Peters
County Extension Office
110 N. Oakley
Luverne, MN 56156

James L. Edman
County Extension Office
Swift County Courthouse
Benson, MN 56215

William L. Peterson
County Extension Office
Wrighe County COurthouse
Buffalo, MN 55313

Blake D. Peterson
County Extension Office
208 Roseau County Courthouse
Roseau, MN 56751

Richard W. Brand
County Extension Office
Todd Co. Courthouse Annex
Long Prairie, MN 56347

David S. Johnson
County Extension Office
1104 Tenth Ave.
Clarkfield, MN 56223

Keith Martikainen
County Extension Office
Courthouse
Virginia, MN 55792

Delbert L. Sand
County Extension Office
Traverse County Courthouse
Wheaton, MN 56296

Carroll F. Giesler
County Extension Office
Courthouse - Room 2
Willmar, MN 56201

Matthias P. Metz
County Extension Office
Wabasha County COurthouse

Lakefield, MN 56150

Roland S. Skelton
County Extensio Office
Kanabec County Courthouse
Mora, MN 55051

Marvin D. Olson
County Extension Office
Box 977
Willmar, MN 56201

Mary T. Jenkins
County Extension Office
Kitteon County Courthouse
Hallock, MN 56728

Donald S. Petman
County Extension Office
Koochiching County Courthosue
International Falls, MN 56649

Richard F. Estum
County Extension Office
Lac Qui Parle Co. Courthouse
Madison, MN 56256

Thomas E. Kean
County Extension Office
Lake County Courthouse
Two Harbors, MN 55616

Otto I. Lee
County Extension Office
Courthouse
Baudette, MN 56623

Robert J. Leary
County Extension Office
Le Sueur County Courthouse
Le Center, MN 56057

Arnold H. Claassen
County Extension Office
Lincoln County Courthouse
Ivanhoe, MN 56142

Raymond J. Newell
County Extension Office
Lyon County Courthouse - Box 587
Marshall, MN 56258

Charles D. Peterson
County Extension Office
Marshall County Courthouse
Warren, MN 56762

Floyd H. Bellin, Jr.
County Extension Office
P.O. Box 804
Fairmont, MN 56031

Gary A. Hachfeld
County Extension Office
McLeod County Courthouse
Glencoe, MN 55336

K. Russel Bjorhus
County Extension Office
Meeker County Courthouse
Litchfield, MN 55355

Clayton F. Grabow
County Extension Office
Mille Lacs Co. Office Building
Milaca, MN 56353

Kenneth M. Olson
County Extension Office
Morrison Co. Old Courthouse
Little Falls, MN 56345

Harlan L. Johnsrud
County Extension Office
Mower County Courthouse
Austin, MN 55912

Rueben M. Boxrud
County Extension Office
Murray County Courts Building
Slayton, MN 56172

Gregory D. Luchb
County Extension Office
P.O. Box 240
St. Peter, MN 56002

Ada, MN 56510

David Kjome
County ExtensionOffice
717 Third Ave. SE
Rochester, MN 55901

Denzil D. Cooper
County Extension Office
Town Hall
Perham, MN 56573

Kenneth R. Rose
County Extension Office
W. Ottertail County Courtho
Fergus Falls, MN 56537

Terrance T. Courneya
County Extension Office
Pennington County Courthous
Thief River Falls, MN 567

Kenneth M. Carlier
County Extension Office
Cassidy Building
Hinckley, MN 55037

Robert E. Fritz
County Extension Office
Box 669
Pipestone, MN 56164

Harley S. Shurson
County Extension Office
City Hall
McIntosh, MN 56556

Samuel L. Bigger
County Extension Office
Courthouse
Crookston, MN 56716

John E. Morris
County Extension Office
Pope County Courthouse
Glenwood, MN 56334

League of Women Voters
607 Olander Street SE
Faribault, MN 55021

Mrs. H.E. Janky, Pres.
Faribault Area Comm. for
Environmental Quality
1814 NW 16th Street
Faribault, MN 55021

Mr. A.C. Johannsen, Sec.
Izaak Walton Leageu
Rice County Chapter
623 NW 5th Street
Faribault, MN 55021

Northfield Env. Quality Council
City of Northfield,
Northfield, MN 55057

Mr. James R. Miller, Pres.
Fond-du-lac community Club
13026 West Third Street
Duluth, MN 55808

Mrs. Barbara Reinert, Pres.
League of Women Voters
V.A. Hospital Site
St. Cloud, MN 56301

Paul Cook
3950 Lookout Place
Columbia Heights, MN 55421

Donald Andrews
MN Env. Defense Council
1515 Eighth Avenue North
St. Cloud, MN 56301

Mrs. Donald Wesely, Pres.
League of Women Voters
445 West McKinley
Owatonna, MN 55060

League of Women Voters
301 West Ninth Street
Morris, MN 56267

Mr. J.L. Flynn
Big Birch Lake Assn.
Route 1
Grey Eagle, MN 56336

Mr. H.L. Brandenburg, Pres.
Wabasha Chapter,
Izaak Walton League
Wabasha, MN 55981

L. Gierok, Sec.
Winona Rod & Gun Club
P.O. Box 835
Winona, MN 55987

Mr. on P. Erickson
Board Member
Lake City Chamber of Commerce
Lake City, MN 55041

Mrs. R. S. Foss, Pres.
Twin Lakes Assn.
Menahga, MN 56464

Mrs. Louis Hauser, Pres.
Leagueof Women Voters,
616 Hall Avenue
White Bear Lake, MN 55110

Mr. Dale Haswell, Sec.
Izaak Walton League
80 Grove Street
Mahtomedi, MN 55115

James Johnson, Acting Sec.
Marine Env. Adv. Comm.
P.O. Box 104
Marine on The St. Croix, MN
55047

John M. Lundsten
Buffalo Lake Improvement Comm.
Buffalo, MN 55313

Rush Lake Improvement Assn.
2233 North Hamline Ave.
St. Paul, MN 55113

Lester J. Koopman
Route 4, Box 62
Detroit Lakes, MN 56501

F.W. Conner
Area Conservationist
209 W. Mulberry Street
St. Peter, MN 56082

Mr. Chris J. Ryg
Station Manager, KLSE
Riverside Building
400 South Broadway
Rochsester, MN 55901

Mr. Arnold G. Overby
Save Lake Superior Assn.
Box 386
Beaver Bay, MN 55601

James L. Frost, P.E.
Metropolitan Council
300 Metro Square Building

Ms. Rosalie Bunge
Learning Resources Center
Normandale Community College
9700 France Avenue South
Bloomington, MN 55431

James C. Martin
County Extension Office
Courthouse
Mahnomen, MN 56557

Arthur R. Frame
County Extension Office
P.O. Box432
Worthington, MN 56187

EXTENSION AGETNS

Glen R. Chambers
County Extension Office
Aitkin County Courthouse
Aitkin, MN 56431

Richard E. Swanson
County Extension Office
Anoka Activity Center
550 Bunker Lake Blvd.
Anoka, MN 55303

Ernest A. Nelson
County Extension Office
P.O. Box 663
818 Washington Ave.
Detroit Lakes, MN 56501

Elmo L Skare
County Extension Office
Beltrami County Courthouse
Bemidji, MN 56601

Burton P. Olson
County Extension Office
Benton County Courthouse
Foley, MN 56329

John P. Cunningham
County Extension Office
342 NW Second St.
Ortonville, MN 56278

Donald Hasbargen
County Extension Office
321 N. 2nd St.
Mankato, MN 56001

Lawrence G. Peichel
County Extension Office
108½ W. Main St.
Sleepy Eye, MN 56085

County Extension Office
Courthouse
Walker, MN 56484

Roger J. Larson
county Extension Office
1st Fl. Courthouse
Montevideo, MN 56265

Duane Schrader
County Extension Office
Box 278
North Branch, MN 55056

Edmund Bernhardsen
County Extension Agent
Clay County Courthouse
Moorhead, MN 56560

Robert S. Tervola
County Extension Office
Clearwater County Courthosue
Bagley, MN 56621

Gerald A. Eisler
County Extension Office
Cook County Courthosue
Grand Marais, MN 55604

Darrell D. Anderson
County Extesnion Office
R.R. 2, Box 123
Windom, MN 56101

James L. Rabehl
County Extension Office
Crow Wing County Courthouse
Brainerd, MN 56401

Warren N. Sifferath
County Extension Office
Fairgrounds - 4100-220 St. W.
Farmington, MN 55024

County Extension Office
Faribault County Office Bui
412 North Nicollet
Blue Earth, MN 56013

Milton L. Hoberg
County Extension Office
Masonic Building
Preston, MN 55965

Eldon H. Senske
County Extension Office
200 Post Office Building
Albert Lea, MN 56007

Richard C. Walter
County Extension Office
Goodhue County Courthouse
Red Wing, MN 55066

Rolyn E. Samuelson
County Extension Office
Grant County Courthouse
Elbow Lake, MN 56531

James C. Kemp
County Extension Office
Suite 107 - 250 N. Central A
Wayzata, MN 55391

Lavonne A. Misner
Urban Extension Office
610 W. 28th St.
Minneapolis, MN 55408

Russell L. Krech
County Extension Office
310 Main St. W.
Caledonia, MN 55921

Carlton, MN 55718

Marge Christenson

Jeanne D. Markell
County Extension Office
233 S. Olive
Waconia, MN 55387

David H. Hanson
County Extension Office
Main Street
Dodge Center, MN 55927

Milt Pelletier
790 Cleveland Ave. S.
Room 218C
St. Paul, MN 55116

Wayne M. Odegaard
County Extension Office
Douglas County Courthouse
Alexandria, MN 56303

Mattie Peterson
4370 Woodale Ave.
St. Louis Park, MN 55424

M.L. Heinselmen
Friends of the Boundary Water Wilderness
1783 Lindig
St. Paul, MN 55113

Mary Poppleton
League of Women Voters
555 Wabasha
St. Paul, MN 55101

John R. Eix
County Extension Office
Hubbard County Courthouse
Park Rapids, MN 56470

Ed Hassler
MN Env. Sciences Foundation Inc
5400 Glenwood Ave.
Minneapolis, MN 55422

John Persell
Water Quality Planner
MN Chippewa Trile
P.O. Box 217
Cass Lake, MN 56633

Erven W. Skaar
County Extension Office
P.O. Box 193
Cambridge, MN 55008

Dorothy Hill
Citizens for A Clean Mississipp
Box 61
Pepin, Wisconsin 54759

County Board of Commissioners
c/o Auditor
Stearns County Courthouse
St. Cloud, MN 56301

Albert E. Page
County Extension Office
Itasca County Courthouse
Grand Rapids, MN 55744

Barbara Hughes
Metro Clean Air Committee
1829 Portland Ave.
Minneapolis, MN 55404

County Board of Commissioners
c/o Auditor
Redwood County Courthouse
Redwood Falls, MN 56283

County Board of Commissioners
c/o Auditor
Wilkin County Courthouse
Breckenridge, MN 56520

Carol Lee
Sierra Club-North Star Chapter
807 Midland Bank Building
Minneapols, MN 55401

County Board of Commissioners
c/o Auditor
Steele County Courthouse
Owatonna, MN 55060

Alden Lind
4130 McCulloch Ave.
Duluth, MN 55804

County Board of commissioners
c/o Auditor
Watonwan County Courthouse
St. James, MN 56081

Grand Rapids, MN 55744

Jackson, MN 56143

Mora, MN 55051

County Board of Commissioners
c/o Auditor
Kandiyohi County Courthouse
Willmar, MN 56201

County Board of Commissioners
c/o Auditor
Kittson County COurthouse
Hallock, MN 56728

County Board of Commissione
c/o Auditor
Koochiching County Courthou
International Falls, MN 5

County Board of Commissioners
c/o Auditor
Lac Qui Parle Co. Courthouse
Madison, MN 56256

County Board of Commissioners
c/o Auditor
Lake County Courthouse
Two Harbors, MN 55616

County Board of Commissione
c/o Auditor
Lake of the Woods Co. Court
Baudette, MN 56623

County Board of Commissioners
c/o Auditor
LeSueur County Courthouse
LeCenter, MN 56057

County Board of Commissioners
c/o Auditor
Lincoln County Courthouse
Ivanhoe, MN 56142

County Board of Commissione
c/o Auditor
Lyon County COurthouse
Marshall, MN 56258

County Board of Commissioners
c/o Auditor
Mcleod County Courthouse
Glencoe, MN 55336

County Board of Commissioners
C/O Auditor
Mahnomen County COurthouse
Mahnomen, MN 56557

County Board of Commissione
c/o Auditor
Marshall County Courthouse
Warren, MN 56762

County Board of Commissioners
c/o Auditor
Martin County Courthouse
Fairmont, MN 56031

County Board of Commissioners
c/o Auditor
Meeker County Courthouse
Litchfield, MN 55355

County Board of Commissioner
c/o Auditor
Mille Lacs County COurthouse
Milaca, MN 56353

County Board of Commissioners
c/o Auditor
Morrison COunty Courthouse
Little Falls, MN 56345

County Board of Commissioners
c/o Auditor
Mower County Courthouse
Austin, MN 55912

County Board of Commissioner
c/o Auditor
Murray County Courthouse
Slayton, MN 56172

County Board of Commissioners
c/o Auditor
Nicollet County Courthouse
St. Peter, MN 56082

County Board of Commissioners
c/o Auditor
Nobles County Courthouse
Worthington, MN 56187

County Board of Commissioner
C/O Auditor
Norman County Courthouse
Ada, MN 56510

County Board of Commissioners
c/o Auditor
Olmsted County Courthouse
Rochester, MN 55901

County Board of Commissioners
c/o Auditor
Otter Tail County Courthouse
Fergus FAlls, MN 56537

County Board of Commissioner
c/o Auditor
Pennington County Courthouse
Thief River Falls, MN 567

County Board of Commissioners
c/o Auditor
Pine County Courthouse
Pine City, MN 55063

County Board of Commissioners
c/o Auditor
Pipestone County Courthouse
Pipestone, MN 56164

County Board of Commissioner
c/o Auditor
Polk County Courthouse
Crookston, MN 56716

County Board of Commissioners
c/o H.W. Bly
Hancock, MN 56244

County Board of Commissioners
c/o Auditor
Courthouse

County Board of Commissioner
c/o Auditor
Red Lake County Courthouse

County Board of Commissioners
Cass County Courthosue
Walker, MN 56484

County Board of Commissioners
c/o Auditor
Aitkin County Courthouse
Aitkin, MN 56431

County Board of Commissioners
c/o Auditor
Chippewa County Courthosue
Montevideo, MN 56265

County Board of Commissioners
c/o Auditor
Anoka County Courthouse
Anoka, MN 55303

County Board of Commissioners
c/o Auditor
Chisago County Courthosue
Center City, MN 55012

County Board of Commissioner
c/o Auditor
Faribault County COurthouse
Blue Earth, MN 56013

County Board of Commissioners
c/o Auditor
Becker County Courthouse
Detroit Lakes, MN 56501

County Board of Commissioners
c/o Auditor
Clay County Courthouse
Moorhead, MN 56560

County Board of Commissioner
c/o Auditor
Fillmore County Courthouse
Preston, MN 55965

County Board of Commissioners
c/o Auditor
Beltrami County Courthouse
Bemidji, MN 56601

County Board of Commissioners
c/o Auditor
Clearwater County Courthosue
Bagley, MN 56621

County Board of Commissioner
c/o Auditor
Freeborn County Courthouse
Albert Lea, MN 56007

County Board of Commissioners
c/o Auditor
Benton County Courthouse
Foley, MN 56329

County Board of Commissioners
c/o Auditor
Cook County Courthouse
Grand Marais, MN 55604

County Board of Commissioner
c/o Auditor
Goodhue County COurthouse
Red Wing, MN 55066

County Board of Commissioners
c/o Auditor
Big Stone County Courthouse
Ortonville, MN 56278

County Board of Commissioners
c/o Auditor
Cottonwood County Courthouse
Windom, MN 56101

County Board of Commissioner
c/o Auditor
Grant County Courthouse
Elbow Lake, MN 56531

County Board of Commissioners
c/o Auditor
Blue Earth County Courthouse
Mankato, MN 56001

County Board of Commissioners
c/o Auditor
Crow Wing County Courthouse
Brainerd, MN 56401

County Board of Commissioner
c/o Auditor
325 Hennepin County Courthou
Minneapolis, MN 55415

County Board of Commissioners
c/o Auditor
Brown County COurthosue
New Ulm, MN 56073

County Board of Commissioner
c/o Auditor
Houston COunty Courthouse
Caledonia, MN 55921

County Board of Commissioner
c/o Auditor
Hubbard County Courthouse
Park Rapids, MN 56470

County Board of Commissioner
c/o Auditor
Isanti County Courthouse

County Board of Commissioners
c/o Auditor
Renville County Coutthouse
Olivia, MN 56277

County Board of Commissioners
c/o Auditor
Rice County Courthouse
Faribault, MN 55021

County Board of Commissioners
c/o Auditor
Rock County Courthouse
Luverne, MN 56156

County Board of Commissioners
c/o Auditor
Roseau County Courthouse
Roseau, MN 56751

County Board of Commissioners
c/o Auditor
St. Louis County Courthouse
Duluth, MN 55802

County Board of Commissioners
c/o Joseph S. Ries
Courthouse
Shakopee, MN 55379

County Board of Commissioners
c/o Auditor
Sherburne County COurthouse
Elk River, MN 55330

County Board of Commissioners
c/o Auditor
Sibley County Courthouse
Gaylord, MN 55334

County Board of Commissioners
c/o Auditor
Stevens County Courthouse
Morris, MN 56267

County Board of Commissioners
c/o Auditor
Swift County COurthouse
Benson, MN 56215

County Board of Commissioners
c/o Auditor
Todd County Courthouse
Long Prairie, MN 56347

County Board of Commissioners
c/o Auditor
Traverse County Courthouse
Wheaton, MN 56296

County Board of Commissioners
c/o Auditor
Wabasha County Courthouse
Wabasha, MN 55981

County Board of Commissioners
c/o Auditor
Wadena County Courthouse
Wadena, MN 56482

County Board of Commissioners
c/o Auditor
Waseca County Courthouse
Waseca, MN 56093

County Board of Commissioners
c/o Auditor
Washington County Courthouse
Stillwater, MN 55082

County Board of Commissioners
c/o Auditor
Wright County Courthouse
Buffalo, MN 55313

County Board of Commissioners
c/o Auditor
Yellow Medicine County Cour
Granite Falls, MN 56241

County Board of Commissioners
c/o Auditor
Winona County Courthouse
Winona, MN 55987

County Board of Commissioners
C/o Auditor
Calrton County Courthouse
Carlton, MN 55718

County Board of Commissioners
c/o Auditor
Carver County Courthouse
Chaska, MN 55318

County Board of Commissioners
c/o Auditor
Dakota County Courthouse
Hastings, MN 55033

County Board of Commissioners
c/o Auditor
Dodge County Courthouse
Mantorville, MN 55955

County Board of Commissioners
c/o Auditor
Douglas County Courthouse
Alexandria, MN 56308

Senator John C. Chenoweth
District 66
205 State Capitol

Senator Douglas J. Johnson
District 6
203 State Capitol

Senator William Luther
District 45
306 State Capitol

Senator Steve Keefe
District 59
301 State Capitol

Senator William McCutcheo
District 67
29 State Capitol

Senator William G. Kirchner
District 37
129 State Office Building

Senator Mike Menning
District 26
28 State Capitol

Senator Jack I. Kleinbaum
District 17
326 State Capitol

Senator Gene Merriam
District 47
27 State Capitol

Senator John Bernhagen
District 22
142 State Office Building

Senator Carl A. Jensen
District 28
121A State Office Building

SEnator Dee Knaak
District 49
119 State Office Building

Senator Robert G. Dunn
District 18
131 State Office Building

Senator
Frank J. Knoll
District 61
304 State Capitol

Senator Howard A. Knutson
District 53
141 State Office Building

Senator Jerald C. Anderson
District 18
303 State Capiotl

Senator Florian Chmielewski
District 14
325 State Capitol

Senator John Keefe
District 40
124 State Office Building

Senator Eugene Stokowski
District 55
235 State Capitol

Senator George Pillsbury
District 42
130 State Office Building

Senator Peter P. Stumpf
District 64
328 State Capitol

Senator Collin C. Peterson
District 10
24G State Capitol

Senator Robert J. Tennessen
District 56
309 State Capitol

Senator George F. Perpich
District 5
303 State Capitol

Senator Timothy J. Penny
district 30
323 State Capitol

Senator Arnulf Ueland Jr.
District 29
114 State Office Building

Senator Gerald L. Willet
District 4
205 State Capitol

Senator Howard D. Olson
District 27
325 State Capitol

Senator James Ulland
District 8
143 State Office Bulding

Governor's Office
Room 130
State Capitol

Senator Wayne L. Olhoft
District 11
30 State Capiotl

Senator Conrad M. Vega
District 29
24E State Capitol

Senator Clarence Purfeerst
District 24
323 State Capitol

Senator Harmon T. Ogdahl
District 58
122A State Office Build

Senator Roger E. Strand
District 15
24F State Capitol

Senator Earl W. Renneke
District 23
140 State Office Building

Senator James Nichols
District 20
23D State Capitol

Senator Myrton O. Wegener
District 12
328 State Capitol

Senator Emily A. Staples
District 43
235 State Capitol

Senator Tom A. Nelson
District 31
23K State Capitol

Wadena, MN 56482

Zoning Administrator
124 County COurthouse
Duluth, MN 55803

David F. Zimmerman
Zoning Administrator
Courthouse
Waseca, MN 56093

Kenneth A. Riesgraf
Zoning Administrator
Courthouse
Shakopee, MN 55379

William Schwab
Zoning Administrator
14900 - 61st N.
Stillwater, MN 55082

Harvey L. Alfords
Zoning Administrator
Administration Building
Elk River, MN 55330

Marvin Wellnitz
Zoning Administrator
P.O. Box 396
St. James, MN 56081

John Kading
Zoning Administrator
Gaylord, MN 55334

Glenn MacTaggart
Zoning Administrator
Courthouse
Breckenridge, MN 56520

Jack Wirmer
Zoning Administrator
Box 604
St. Cloud, MN 56301

Steven P. Johnson
Zoning Administrator
Courthouse
Winona, MN 55987

Silvin Pribyl
Zoning Administrator
590 Dunnel Drive
Owatonna, MN 55060

David A. Fricke
Zoning Administrator
Courthouse
Buffalo, MN 55313

Donald Madsen
Zoning Administrator
P.O. Box 347
Morris, MN 56267

George D. Christians
Zoning Administrator
Box 675
Clarkville, MN 56223

Francis Perrizo
Zoning Administrator
Courthouse
Murdock, MN 56271

Kalian Balcom
Zoning Administrator
Courthouse Annex
Long Prairie, MN 56347

Joy Maahs
Zoning Administnator
Courthouse
[illegible] MN 56621

Walker, MN 56484

Mencer Johnson
Zoning Administrator
Route 4
Aitkin, MN 56431

Victor R. bErg
Zoning Administrator
Courthouse
Montevideo, MN 56265

Wesley C. Kasten
Zoning Administrator
Courthouse
Preston, MN 55965

Dallis S. Felegy
Zoning Administrator
Anoka Courthouse
Anoka, MN 55303

Gerald A. Peterson
Zoning Administrator
Center City, MN 55012

Truman Throne
Zoning Administrator
Courthouse
Albert Lea, MN 56007

Floyd Svenby
Zoning Administrator
Courthouse
Detroit Lakes, MN 56501

Mark Beardsley
Zoning Administrator
Courthouse
Moorhead, MN 56560

Joyce Bucher
Zoning Administrator
Courthouse
Red Wing, MN 55056

Dan Logelin
Zoning Administrator
Bagley, MN 56676

Jim Standish
Zoning Administrator
Elbow Lake, MN 56531

Donald Welch
Zoning Administrator
County Courthouse
Foley, MN 56329

Timothy Kennedy
Zoning Administrator
Courthouse
Grand Marais, MN 55604

Rick Frank
Zoning Administrator
Courthouse
Caledonia, MN 55921

Vincent Taffe
Zoning Administrator
20 SE 2nd
Ortonville, MN 56278

Farley Grunig
Zoning Administrator
Cottonwood Courthouse
Windom, MN 56101

Vern Massie
Zoning Administrator
Park Rapids, MN 56470

Jerry Freeberg
Zoning Administrator
202 E. Jackson Street
Mankato, MN 56001

Zoning Administrator
Courthouse
Brainerd, MN 56410

Harold Person
Zoning Administrator
Courthouse
Cambridge, MN 55008

Arthur F. Stone
Zoning Administrator
P.O. Box 545
New Ulm, MN 56073

Robert Chelseth
Zoning Administrator
1560 - 55th
Hastings, MN 55033

James H. Sullivan
Zoning Administrator
Courthouse
Grand Rapids, MN 55744

Albert S. Anderson
zoning Administrator
Courthouse
Carlton, MN 55718

Cecil Samuelson
Zoning Administrator
Courthouse
Mantorville, MN 55955

Gorden Olson
Zoning Administrator
Highway Office
Jackson, MN 56143

Virginia Harris
Zoning Administrator
660 E. 4th, Courthouse
Chaska, MN 55318

Dennis P. Nagle
Zoning Administrator
P.O. Box 336
Alexandria, MN 56308

marvin Erickson
Zoning Administrator
Courthouse

Rep. Dee Long
247 State Office Building

Rep. Willard Munger
297 State Office Building

Rep. Tony Onnen
383 State Office Building

Rep. Cal Ludeman
367 State Office Building

Rep. Mary Murphy
262 State Office Building

C. Thomas Osthoff
288 State Office Building

Rep. Marnie Luknic
394 State Office Building

Rep. Bruce Nelsen
315 State Office Building

Rep. Todd Otis
255 State Office Buidling

Rep. George Mann
245 state Office Building

Rep. Marlin E. Nelsen
179 State Office Building

Rep. Al Patton
217 State Office Building

Rep. Paul McCarron
248 State Office Building

Rep. Ken I Nelson
162 State Office Building

Rep. Robert Pavlak
371 State Office Building

Rep. Kenneth J. McDonald
323 State Office Buidling

Rep. Joseph Nichaus
319 State Office Building

Rep. James Pehler
250 State Office Building

Rep. Bob Mc Eachern
69 State Office Building

Rep. Jim Norman
354 State Office Building

Rep. Bill Peterson
358 State Office Building

Rep. Lyle Mehrkens
75 State Office Building

Rep. Fred Norton
340 State Office Building

Rep. Mark Pienho
345 State Office Building

Rep. James Metzen
19 State Office Buidling

Rep. Steven Novak
285 State office Building

Rep. Ray Pleasant
370 State Office Buidling

Rep. Lona Minne

Rep. Myron Nysether

Rep. Norman Prahl

Senator David D. Schaaf
District 46
205 State Capitol

Senator Robert J. Schmitz
District 36
328 State Capitol

Senator Ed Schrom
District 16
205 State Capitol

Senator A.O.H. Setzepfandt
District 21
231 StateCapitol

Senator Ronald B. Sieloff
District 63
128 State Office Building

Senator Gerry Sikorski
District 51
23L State Capitol

Senator D.H. Sillers
District 9
133 State Office Building

Senator Sam G. Solon
District 7
303 State Capitol

Senator Allan H. Spear
District 57
209 State Capitol

Senator Dave Knee
District 13
137 State Office Building

Senator Nicholas D. Coleman
District 65
208 State Capitol

Senator Steve Engler
District 25
116 State Office Building

Senator Jerome O. Gunderson
District 35
306 State Capitol

Senator Mel Frederick
District 32
125 State Office Building

Senator Marvin B. Hanson
District 1
230 State Capitol

Senator Edward J. Gearty
District 54
235 State Capitol

Senator Jerome M. Hughes
District 50
328 State Capitol

Senator Otto T. Lang
District 38
136 State Office Building

Senator Hubert H. Humphrey
District 44
121 State Capitol

Senator Jack Davies
District 60
27 State Capiotl

Senator Neil Dieterich
District 62
306 State Capitol

Rep. Richard Nigley
816 State Office Building

Rep. Ann Wynia
263 State Office Building

Representative Leo Adams
289 State Office Buidling

Rep. Thomas Berkelman
223 State Office Buidling

Rep. William Crandall
355 State Office Building

Representative John Ainley
377 State Office Building

Rep. John Biersdorf
368 State Office Building

Rep. William Dean
343 State Office Buidling

Representative Raymond Albrecht
312 State Office Building

Rep. Kathleen Blatz
357 State Office Building

Rep. Terry Dempsey
171 State Office Building

Representative Bob Anderson
399A State Office Building

Rep. Barnard Brinkman
296 State Office Building

Rep. Gaylin Den Ouden
385 state Office Building

Representative Bruce Anderson
254 State Office Building

Rep. Peggy Byrne
214 State Office Building

Rep. John Drew
382 State Office Building

Representative Delbert Anderson
335 State Office Building

Rep. Doug Carlson
372 State Office Building

Rep. Willis Eken
163 State Office Building

Rep. Glen Anderson
291 State Office Building

Rep. Lyndon Carlson
228 State Office Building

Rep. Donimic Elioff
266 State Office Building

Rep. Irvin Anderson
276 State Office Building

Rep. James Casserly
238 State Office Building

Rep. Robert Ellingson
162½ State Office Buidling

Rep. David Battaglia
267 State Office Building

Rep. Janet Clark
215 State Office Building

Rep. Stanley Enebo
222 State Office Building

Rep. Joseph Begich

Rep. Wendell Erickson

Rep. Jim Evans
172 State Office Building

Rep. Jim Heap
397 State Office Buidling

Rep. Dick Kaley
318 State Office Building

Rep. Douglas Ewald
369 State Office Building

Rep. Lon Heinetz
389 State Office Building

Rep. Henry kalis
244 State Office Building

Rep. Ray Faricy
240 State Office Buidling

Rep. Dwaine Hoberg
352 State Office Building

Rep. Randy Kelly
251 State Office Building

Rep. David Fjoslien
387 State Office Building

Rpe. Shirley Hokanson
234 State Office Building

Rep. Raymond Kempe
218 State Office Building

Rep. Mary Forsythe
333 State Office Building

Rep. Joel Jacobs
229 State Office Building

Rep. Gerald Knickerbocker
395 State Office Building

Rep. Donald Friedrich
330 State Office Buildng

Rep. Mike Jaros
232 State Office Buidling

Rep. Richard Kostohryz
299C State Office Building

Rep. M.D. Fritz
376 State Office Building

Rep. David Jennings
346 State Office Building

Rep.Carl Kroening
239 State Office Buidling

Rep. Stanley Fudro
365 State Office Building

Rep. Carl Johnson
170 State Office Buidling

Rep. Adolph Kvam
175 State Office Building

Rep. Lee Greenfield
336 State Office Building

Rep. Dean Johnson
327 State Office Building

Rep. Gary Laidig
325 State Office Building

Rep. Charles Halberg
[illegible] State Office Building

Rep. Tad Jude
235 State Office Building

Rep. Arlene Lehto
299 State Office Building

Rep. Leo Reding
179½ State Office Building

Rep. Tom Rees
365 State Office Building

Rep. Robert Reif
384 State Office Building

Rep. James Rice
249 State Office Building

Rep. John Rose
399C State Office Building

Rep. Elliot Rothenberg
388 State Office Buidling

Rep. John Sarna
167 State Office Building

Rep. William Schreiber
393 State Office Building

Rep. Rod Searle
[illegible] State Office Building

Rep. Glen Sherwood
331 State Office Building

Rep. Harry Sieben, Jr.
273 State Office Building

Rep. Michael Sieben
242 State Office Buidling

Rep. Wayne Simoneau
284 State Office Building

Rep. Tony Stadum
381 State Office Building

Rep. Tom Stoa
161 State Office Building

Rep. Warren Stowell
344 State Office Building

Rep. Steve Sviggum
379 State Office Building

Rep. James Swanson
226 State Office building

Rep. Paul Thiede
359 State Office Building

Rep. Merlyn Valan
366 State Office Building

Rep. Donald Valento
378 State Office Buidling

Rep. Robert Vanasek
292 State Office Building

Rep. Gordon Voss
338 State Office Buidling

Rep. Gene Waldorf
293 State Office Building

Rep. John Weaver
311 State Office Building

Rep. Richard Welch
224 State Office Building

Rep. Ray Welker
386 State Office Building

Rep. Stephen Wenzel
294 State Office Building

Rep. Al Weiser
332 State Office Building

Mr. Eugene Abbott, Ex. Dir.
Reg. 1 Development Commission
425 Woodland Avenue
Crookston, MN 56716

Mr. Eugene Hippe, Ex. Dir.
Reg. 6E Development Commissi
311 West Sixth Street
Willmar, MN 56201

Mr. Terence Stone, Ex. Dir.
Reg. 9 Development Commissio
709 North Front Street
Mankato, MN 56001

M. J. Haack, Chairman
Reg. 2 Development Commission
2508 Calihan Avenue
Bemidji, MN 56601

Mr. John Thompson, Chairman
Reg. 6W Development Commission
800 - 16th Street South
Benson, MN 56215

Mr. Robert Larson, Chairman
Reg. 10 Development Commissio
420 NW 2nd Street
Faribault, MN 55021

Mr. John Ostrem, Ex. Dir.
Reg. 2 Development Commission
Mental Health Building
box 534
Bemidji, MN 56001

Mr. Dennis Dahlem, Ex. Dir.
Reg. 6W Development Commission
323 West Schlieman
Appleton, MN 56203

Mr. Rolf Middleton, Ex. Dir.
Reg. 10 Development Commissio
301 Marquett Bank Building
S. Broadway at 2nd St. SE
Rochester, MN 55901

Mr. Innis Nesbitt, Chairman
Reg. 3 Development Commission
109 Park Avenue
International Falls, MN 56649

Mr. William Jokela, Chairman
Reg. 7E Development Commission
Box 311
Sandstone, MN 55072

Mr. John Boland
Reg. 11 Development Commissio
300 Metro Square Building
7th & Robert Streets
St. Paul, MN 55101

Mr. Rudy Esala, Ex. Dir.
Reg.3 Development Commission
200 Arrowhead Place
211 West 2nd Street
Duluth, MN 55802

Reg. 7E Development Commission
Kanabec County Courthouse
18 North Vine Street
Mora, MN 55051

Leslie Aukes, Chairman
Reg.4 Development Commission
Norcross, MN 56274

Mr. Ralph Thompson, Chairman
Reg 7W Development Commission
Belgrade, MN 56312

Mr. John Sem, Ex. Dir.
Reg. 4, Development Commission
Administration Building
Fergus Falls Comm. Coll.
Fergus Falls, MN 56537

Reg. 7W Development Commission
2700 - 1st Street North
St. Cloud, MN 56301

Ms. Mary Koep, Chairman
Reg. 5 Development Commission
123 Laurel
Brainerd, MN 56401

Mr. John Maurer, Chairman
Reg. 8 Development Commission
Wabasso, MN 56293

Mr. Robert F. Benner, Ex. Dir.
Reg. 5 Development Commission
102 Sixth Street North
Staples, MN 56479

Mr. Mark Atchison, Ex. Dir
Reg. 8 Development Commission
2711 Broadway,
Slayton, MN 56172

Senator Roger A. Laufenburger
District 34
235 State Capitol

Rep. Elton Redalen
329 State Office Building

Senator Robert Benedict
Dsitrict 33
306 State Capitol

Rep. Robert Searles
173 State Office Building

Senator Nancy Brataas
Dsitrict 33
139 State Office Building

Rep. John Tomlinson
271 State Office Building

Senator Robert B. Lessard
District 3
24H State Capitol

Mr. Ervin Strandquist, Chr.
Reg. 1 Development Commissio
Newfolden
Minnesota 56738

Senator Robert O Ashbach
District 48
123B State Office Building

Rep. Kenneth Zubay
326 State Office Building

Mr. Earl Larson, Chr.
Reg. 6E Development Commissi
Route 1
Willmar, MN 56201

Eugene Fitterer
Zoning Administrator
Courthouse
Litchfield, MN 55355
Mn

Rep. John Clawson
227 State Office Building

Mr. Carl Wyczawski, Chr.
Reg. 9 Development Commissio
101 North Minnesota
New Ulm, MN 56073

Raymond Johnson
Zoning Administrator
323 Kendall Ave. N.
Thief River Falls, MN 56701

Rep. Gilbert Esau
317 State Office Building

William Krumholz
Zoning Administrator
Hallock, MN 56728

Wayne R. Golly
Zoning Administrator
Courthouse
Pine City, MN 55063

Ruth McLinn
Zoning Administrator
Courthouse
International Falls, MN 56

Edwin E. Homan
Zoning Administrator
Courthouse
Glencoe, MN 55336

William Krumholz

Edwin F. Homan

Raymond Johnson

George Gehant
Zoning Administrator
Courthouse
Madison, MN 56256

Mahlon L. Dahl
Zoning Administrator
635 - 2nd street
Milaca, MN 56353

Henry Gredvig
Zoning Administrator
Box 554
Crookston, MN 56716

Lester Mattson
Zoning Administrator
Courthouse
Two Harbors, MN 55616

Lee G. McKinnon
Zoning Administrator
Old Courthouse
Little Falls, MN 56345

Michael D. Howe
Zoning Administrator
Courthouse
Glenwood, MN 56334

Gary Lockner
Zoning Administrator
R.R. 1, Box 2728
Baudette, MN 56623

Daryl W. Franklin
Zoning Administrator
Mower Courthouse
Austin, MN 55912

Lowell Ostenson
Zoning Administrator
Courthouse
Red Lake Falls, MN 56750

Art Poll
Zoning Administrator
Highway Building
Le Center, MN 56057

Kathy Nepp
Zoning Administrator
Murray County Courthouse
Slayton, MN 56172

Gary Zick
Zoning Administrator
P.O. Box 4
Redwood Falls, MN 56283

Merle Hanson
Zoning Administrator
City Hall
Lake Benton, MN 56149

Willard C. Johnson
Zoning Administrator
Box 7
St. Peter, MN 56082

Clifford A. Thoreson
Zoning Administrator
Courthouse
Olivia, MN 56277

Michail W. gort
Zoning Administrator
607 Main
Marshall, MN 56258

G.C. Bomgaars
Zoning Administrator
Box 591
Worthington, MN 56187

William Gill
Zoning Administrator
P.O. Box 40
Faribault, MN 55021

Dick Bjerk
Zoning Administrator
Box 305
Mahnomen, MN 56557

Howard Christianson
Zoning Administrator
Courthouse
Ada, MN 56510

William McCormick
Zoning Administrator
North Blue Mound Ave.
Luverne, MN 56156

Dennis Hjelle
Zoning Administrator
Courthouse
Warren, MN 56762

Ronald R. Livingston,
Zoning Administrator
1421 -3rd Ave. SE
Rochester, MN 55901

Serials Records
Gifts & Exchange Division
U of MN Libraries
Minneapolis, MN 55455

Ms. Nancy Helleloid, Librarian
Library
Rainy River Community College
International Falls, MN 56649

Mr. Charles Skrief
MN Historical Society
240 Summit Ave. - Hill House
St. Paul, MN 55102

Legislative Reference Library
State Documents Division
111 State Capitol

Mr. Erling M. Weiberg, Ex. Sec.
MN Water Resources Board
555 Wabasha Street
Room 206

Mr. Michael F. Robinson
Land Use Management Section
3rd Floor Space Center
444 Lafayette Road

Permit Coordination Unit
MN Environmental Quality Board
Room 100, Capitol Square Bldg.
Attn: Eileen S. Deitcher

Northwestern Power Equip. Co.
P.O. Box 4008
St. Paul, MN 55104

Mr. Don Reger
Engineered Sales Company
311 West 44th Street
Minneapolis, MN 55409

Mr. Joseph M. Polito
Honigman, Miller Schwartz &
Cohn
2290 1st National Bank Bldg.
Detroit, Michigan 48226

Mr. H. Lee Holden
P.O. Box 32025
7541 Commerce Lane NE
Minneapolis, MN 55432

Mr. Gerald S. Allen
SERCO Laboratories
1722 Terrace Drive
Roseville, MN 55113

Mr. Richard S. Krouse
Swanson Environmental, Inc.
3303 Paine Avenue
Sheboygan, Wisconsin 53081

Chris L. West
Director of Public Awareness
U.S. EPA, Environmental
Research Center
Res. Triangle Pk., N.C. 27711

S. Stephen Chapman, Ph.D.
12833 Goodview North
White Bear Lake, MN 55110

Associates, Inc.
2335 West Trunk Hwy. 36
St. Paul, MN 55113

Mr. Dan McConnon, Manager
United Power Association
Elk River, MN 55330

Project Environment Foundat
818 Midland Bank Building
Minneapolis, MN 55401

Mr. Raymond A. Haik
Popham, Haik, Schnobrich,
Kaufman & Doty, Ltd.
4344 IDS Center
Minneapolis, MN 55402

Mr. Robert E. Bentley
E G & G Bionomics
790 Main Street
Wareham, Mass. 02571

Mr. Bill Van Den Broek
Project on Clean Water
Natural Res. Defense Counc
917 15th Street NW
Washington, D.C. 20005

Mr. Clare E. Swanson
Conwed Corporation
332 Minnesota Street
P.O. Box 43237
St. Paul, MN 55164

Abrahamson, Dr. Dean E., 309 Soc. Science Bldg., UM, Mpls 55455

Affolter, Donald W., 401 N. 3rd St., LaCrosse, WI 54601

Arkell, James J., Hoerner-Waldorf, 2250 Wabash Ave., Paper Stock Dept., St. Paul 55114

Baker, Wes, Skelly Oil Co., Box 1650, Tulsa, OK 73101

Beanson, Lee, 520 Roanoke Bldg., Mpls 55402

Belisle, Jon, 2594 Brookview Dr., St. Paul 55119

Benforado, David, 3M, Bldg. 42, P.O. Box 33331, St. Paul 55133

Bethlehem Steel Corporation, David M. Anderson, Bethelehem, PA. 18016

B.F. Goodrich, C.E. Titus, 500 S. Main St. Akron, OH 44318

Blacik, Benj. J., U.S. Steel, Missabe Bldg., Duluth 55802

Blum, E.D., Box 7600, Los Angeles, CA 90051

Brenner, Theo., Soap Assn, 475 Park Ave. S. at 32nd, New York, NY 00018

Brockway Glass Co., Inc., Attn: Kenneth Tanner, Brockway, PA 15824

Buell Div. of Envirotech Corp., 253 N. 4th St. Lebanon, PA 17042

Burlington Northern, Propp. D.H. 176 E. 5th St., St. Paul 55101

Caplan, Knowlton J., 5945 Maplewood Lane, Minnetonka 55343

Carlson, Allan, West Star Route, Larsmont 55610

Carlson, Dr. Lauren, Chokio 56221

Ceram-Traz Corp. Attn: Jim Cokes, 6500 Oxford St., Mpls., Mn. 55428

Chemical Construction Corp. One Penn Plaza, New York, NY Attn: R. Wiener

Cherne, Lloyd G., 5701 S. Cty. Rd. 18, Edina 55436

Chu, Lori, 1098 13th Ave. S.E., Mpls 55414

City of Moorhead, Box 779, Moorhead 56560

Clatlin, Dr. Thomas O., U of Wisconsin, 3001 Cowley Hall, LaCrosse, WI 54601

Common Sense, Magnusheim, Clearbrook 56634

Conkey & Associates - D. Kleinschmidt, 616 Builders Exchange, Mpls 55402

Dahmen, Jim Economic Development 480 Cedar St. St. Paul, 55101

Deerwester, Kenneth, Strand Assoc.Inc., 910 W. Wingra Dr., Madison, WI 53715

Defense Supply Agency - Cameron Station, Alexandria, VA 22314

Denzel, Jerry, Rieke Carroll Muller Assoc., Inc., P.O. Box 130, Hopkins 55343

Dept. of Army Const., Eng. Research Lab., P.O. Box 4005, Champaign, IL 61820

Donovan, John M. 1000 Alworth Building, Duluth, Mn. 55802

Drawz, John E., 1100 First National Bank Bldg., Mpls 55402

East Central Regional Development Comm. 18 N. Vine St., Mora 55051

Ellison-Philstrom, Inc., 2305 Ford Pkwy., St. Paul 55116

Environmental Conservation Library, MPL, 300 Nicollet Mall, Mpls 55401

Environmental Reporter, 1231 - 25th St., N.W., Washington D.C. 20037

Finder, Earl E., Ecodyne Corp., 455 Woodland Dr., P.O. Box 3420, St. Paul 5510[illegible]

Ford Motor Co., Christopher Porle, Suite 628, Parklane Tower W., Dearborn, Mi. 48126

Friends of the Earth, c/o John Satterlee, Box 273, Aitkin 56431

Fry, Lloyd L., General Motors Corporation, Warren, Michigan 48090

Gaynor, Allan J., 117 Research Inst., 10 W. 35th St., Chicago, IL 60616

Gelpe, Marcia R., Univ. of Minn. Law School, 125 Fraser Hall, MPls 55455

Gillan, Pete, 7401 Lyndale Ave. S., Mpls 55423

Gilreath, Emily M., Bur. Nat'l Affairs, 1231 25th St., N.W., Washington DC 2003[illegible]

Ginner, Gary F., 1500 S. Tyrol Trail, Mpls 55416

Gottlieb, Marvin, 2276 Highcrest Dr., c/o Univac MS 4091, Roseville 55113 (noise only)

Green, Dr. John C., Dept. Geology, UM, Duluth 55812

Greyhound Corp., CEC, Law Div., Greyhound Tower, Phoenix, AZ 85007

Grittner, Dennis, DPW, Rm.200 Lowry Hotel, St. Paul 55102

Hall, Charles R., 315 Peavey Bldg., 730 Second Ave. S., Mpls 55402

Halverson, Helen, Anoka Cty. Library, 707 Hwy. 10, Mpls 55434

Hamel, Robert E., Boise Cascade-Legal Dept. 1 Jefferson So., Boise, Idaho 8372

Hamilton, J.W., Continental Oil, Transp. Dept., P.O. Box 2197, Houston, TX 770

Hamm, Gilbert, Muskies, Inc., 1708 Univ. Ave., St. Paul 55104

Hammerschmidt, John A., Law Dept. U.S. Steel, 600 Grant St. Pittsburgh, PA 152

Hanf, Chas. 961 Area Vo-Tech Inst., 3300 Century Ave. N., White Bear Lake 5511

Harmon, John P., Dept. 713 Bldg., 00 -1 IBM Corp., Rochester 55901

Harpole, Ellsworth, 928 Goodrich Ave., St. Paul, Mn. 55105

Harries, Gilbert W., 1200 Alworth Bldg., Duluth 55802

Hartung, E.W., Whirlpool Corp., 850 Arcade St., St. Paul 55106

Hatch, Mr. & Mrs. Robert, 2330 W. lake of the ISles Pkwy., Mpls. 55404

Hawley, Lyle R., Graco Inc., P.O. Box 1441 , Mpls 55440

Hanson, D.D., Ona Engineers, 8 Chelsea Pl., Box 8217, Hiuston, TX 77004

Herman, James A. Bendix Corp. Bendix Center Exec.Offices Southfield,Mich.48076
Hetland, Richard T., N.W. Refining Co., P.O. Drawer 9, St. Paul Park 55071

Hoffman, Terry, Rm 820, Transportation Bldg., St. Paul 55155
Illg, Clyde 1420 So. Mississippi River Blvd., St. Paul, Mn. 55116
Int'l Council Shopping Center, Attn: Howard Kalkstein, 445 Park Ave., New York 10022

Industrial Health Eng. Associates, Inc. P.O. Box 9342, Mpls., Mn. 55440

Int'l Minerals & Chem., El.L. Lantz, Inc., Plaza, Libertyville, IL 60048

Interpoll Inc., 1996 W. Co. Rd. C, St. Paul 55113

Isley, Alan R., Motorcycle Ind. Council, 4100 Birch St., Ste., 101, Newport Beac CA 92660

Jacoby, Dr. John, Honeywell Inc., Honeywell Plaza G3175, Mpls 55408

J.C. Penney CO.,Inc.,Legal Dept., 2430 Colorado Natl. Bldg., Denver, Co. 80202

Jensen, Michael E., U.S. Pub. Health Serv., 655 Parfet St., P.O. Box 25287 Denver, CO 80225

John Zink Pollution Research, 4401 S. Peoria, Tulsa, OK 74105

Johnson, Harold A., 6700 Portland Ave., Mpls 55423

Johnson, Mrs. Norman, 998 McLean Ave., St. Paul 55106

Johnson, Richard, Box 307, Roseau 56751

Johnson, William L., 3201 Old Glenview Rd., Wilmette, IL 80091

Karpinski, Linda, Owens, IL FP Div., 1700 N. Westwood Ave. Toledo OH 43607

Kirch, Steve, 2311 26th. Ave. NW, New Brighton, Mn. 55112

Knudson, Sandra, 1829 Portland Ave. S., Mpls 55404

Knutson, Dr. Keith, Biology Dept., St. Cloud State College, St. Cloud

Kolberg, Joe, Boise Cascade Papers, P.O. Box 690, Vancouver, Washington 96660

Krengel, Alex A., Peavey Co., 11 Peavey Rd., Chaska 55318

Lakehead Pipe Line Co., 3025 Tower Ave., Superior WI 54880, Attn: Legal Dept.

Lantz, E.L., Int'l. Minerals & Chemical, 501 E. Lange St, Mundelein,IL 60060

Larson, Richard B., 8932 Northwood Parkway, Mpls 55427

Latz, Robert, 548 Roanoke Bldg., Mpls 55402

Lee, Carol, 818 Midland Bank Bldg., Mpls 55401

Lessig, Dennis, Dept. Env. Control, Box 94653 State Hse., Sta., Lincoln Nebr. 68509

Levenson, Eva, Resources Inform., York Research, 1 Research Dr., Stanford CT 06

Lipe, Jay A., Hackbert, Rooks et al, 208 S. LaSalle St., Chicago, IL 60604

Lucy, Patrick C., 3006 W. 50th St. (on 50th St. at Xerxes Ave. S.) Mpls 55410

Lybrand, Bross, Bros. & Montgomery, 900 Midwest Plaza, Mpls 55402

Madole, Steven, % BRW, Inc., 7101 York Ave So., Mpls 55435

Madsen, Dick, Legal Dept., Boise Cascade Corp. P.O. Box 200, Boise Idaho 83701

Marr, Helen 2074 Itasca Ave., St. Paul, Mn. 55116

Martin, Philip O., United Power Assn., Elk River 55330

Mattson, Milton M., Beaver Bay 55601

McConnon, Dan, Rural Coop. Power Assn., Elk River 55330

McCracken, William L., Detrex Chemical Ind., Box 501, Detroit, Michigan 48232

Melone, Theodore G., 2601 Sunset Blvd., Mpls 55416

Metro Clean Air Committee, 1820 Portland Ave., Mpls 55404

Midwest Research Institute, 425 Volker Blvd., Kansas City, Missouri 64110

Minnesota Conservation Federation, 790 Cleveland Ave, Rm 218 C, St. Paul 55116

Moehnke, J.A., Continental Telephone Co., P.O. Box 98, Two Harbors 55616

Moos, Margaret, MN Public Radio, Inc., 400 Sibley St., St. Paul 55101

Morris, Miles G., Koppers Co., Inc., 440 College Park Dr., Monroeville, PA 1514

Morrison, Gordon L., Mpls. Pk, & Rec. Bd., 250 S. 4th St., Mpls 55415

Motorcycle Industry Council, Iec., 4100 Birch St., Suite 101, Newport Beach, CA 92660

Motorcycle Industry Council, 1001 Connecticut Ave., Washington, D.C. 20036
Attn: Mel Stahl

Nachbar, R.H., P.O. Box 911, International Falls, 56649

Nelson, R.A., McQuay Div., P.O. Box 1551, Mpls 55440

Nelson, Roger, Milsco, Inc., 4501 Hiawatha Ave., Mpls 55406

Nicholas, George W., Dames & Moore, 1550 NW Hwy., Park Ridge, IL 60068

Novicki, Mike, Cornelius Co., 2727 N. Ferry St., Anoka 55303

Orren, M.N., 3517 Raleigh Ave. S., Mpls 55416

Paton, Alexander C., W.R. Grace & Co., Cambridge, Mass. 02140

Patterson, Clare, Northern Nat. Gas., 2223 Dodge Sk., Omaha, Nebraska 68102

Paul Weir Company, 20 N. Wacker Dr., Chicago, Ill 60608

Pelletier, Milt, U.N.S., 3680 Munger Shore Road, Duluth 55810

Persell, John S., Water Quality Planner, Mn. Chippewa Tribe, P.O. Box 217, Cass Lk, Mn. 56633

Plant & Flanged Equipment Co., 4000 85th Ave. N., Mpls 55443

Posner, James, S., Bristol-Myers Co., 345 Park Ave., New York NY 10022

Rahr, Frederick, 8301 W. 108th St., Bloomington 55438

Regional Editor, LaCrosse Tribune, 401 N. Third St., LaCrosse, WI 54601

Robert R. Wallace & Assoc., 2031 2nd Ave. E., Hibbing 55746

Rosen, William S., 620 Osborn Bldg., St. Paul 55102

Roushar, Tom, Bolton & Menk, 515 North Front St., Mankato 56001

Rovers Outing Club, c/o Conservation Chairman, UM, Coffman Union, Mpls 55455

Rowan, Gene, J.C. Penney, 1301 Ave. of Americas, New York, NY 10019

Ryden, Bruce E., Fire Marshall, 2701 Lexington, Roseville 55113

St. Cloud Area Environmental Council, c/o John Peck (Dr.), R.4, St. Cloud 5630

Schipke Engineers, 3101 W. 69th St., Mpls 55435

Schueler, H.L., Kraft Foods, 407 E. 1st St. N., Melrose, 56252

Schultz, Eric B., Hwy. Dept. Rm. 420, Hwy. Bldg., St. Paul 55101

Sidley & Austin, One First Nat'l Plaza, Chicago, IL 60670

Singer, Philip C., Univ. Notre Dame, Dept. Civil Eng., Notre Dame, Ind. 46556

Smith, Carl A., Pillsbury Company, 608 Second Ave. So., Mpls, Mn. 55402

So. St. Paul Env. Comm., J.J. Ulliman, 125 Third Ave. N., So. St. Paul, 55075

So. Eastern Council of Governments, P.O. Box 1859, 208 E. 13th St., Sioux Falls, SD 57101

Spevacek, James, First Nat'l Bank, 120 S. 6th St., Mpls

Spurling, Dean, Midland Glass Co., P.O. Box 69, Shakopee 55379

S. S. Envir. Control, Attn: Houston, Ford Mtr. 628 W. 1 Parklane Blvd., Dearborn Mich. 4812

Stahl, Mel, Motorcycle Ind. Council, 1001 Connecticut Ave., Washington, D.C. 20036

Stock, Donald Hamell Green & Abrahamson, Inc., 2675 Univ. Ave., St. Paul 55114

Sussman, V.H., Ford Motor, Suite 628, Parklane Towers W., 1 Parklane Blvd., Dearborn, Mich 48126

Swanson, Roy E., Fed. Cartridge, 9th & Tyler St., Anoka 55303

Tambornino, Mrs. Cynthia, 6608 Dakota Trail, Edina 55424

Texas Refinery Corp., Vl L. Lawson, 830 N. Main St., Fort Worth, TX 76101

Trigg, Mary, 967 Social Sciences-U of M, Mpls 55455

Tucker, B.J., Caterpillar Tractor Co., 100 N.E. Adams St., Peoria, IL 61602

Two Harbors Civic Assn., Attn: Pres, P.O. Box 39, Two Harbors 55616

Tyler, Clark, St. Paul F & M Ins., 385 Washington St., St. Paul 55102

United Seates Steel Corp., F.B. Skevens, 700 Wolvin Bldg., Duluth 55802

Utterback, P.M., I & M 28F, Babcock & Wilcox Co., P.O. Box 2423, N. Canton OH 44720

Vitala, W.C., Honeywell Plaza G5215, Mpls 55408

Vocational Technical Sch., Water, Wastewater Tech. Dept., St. Cloud 56301

Walker, F.E., Stanford Research Inst., 333 Ravenswood Ave. Menlo Park, CA 940

Wedel, MD, Mark K. St. Louis Park Medical Center, 5000 W. 39th. St., Mpls,Mn. 55416

West Central Regional Development Comm., Fergus Falls, 56537

Westinghouse Aqua-Tech., Attn: Desmond, 1010 Jorrie Blvd., Oak Brook, IL 6072

Whitley, Jr. B.J. Midwestern Gas Transmission, P.O. Box 2511, Houston, TX 7700

Williams, Gerald I., Control Data, CDC Tech. Stds., 8100 34th Ave. S., Mpls 554

Wilson, Lee A., M.S., Suite 6 A-Central Med. Bldg., 393 N. Dunlap, St. Paul 551

Wolcott, Art, Cenex, P.O. Box G, St. Paul 55165

Wold, Kent., L., Glass Container Mf., Inst., Inc., 1800 K ST., N.W. Washington 20006

Wolff, Benno F., W-1781 1st Nat'l Bank Bldg., St. Paul 55101

Woolworth, Mrs. Nancy L., 3719 Sun Terrace, White Bear Lake 55110

Wymeh, Dick, Route 1 Box 220, Wrenshall 55797

Zentner, David, 2116 Columbus Ave., Duluth 55803

Zink, John Co., G. Mc Gill, 4401 S. Peoria, Tulsa, OK 41705

Jayne Flohrs
Martin Co. Courthouse, Rm. 105
Fairmont, MN 56031

Mr. Robert Bintzler - SCS
200 Federal Building
316 Robert St. N.
St. Paul, MN 55101

Ed Homan
McLeod Co. Courthouse
Glencoe, MN 55336

Mr. Vern Ingvalson
MN Farm Bureau
3110 Wooddale Dr. - P.O. Box337
St. Paul, MN 55165

Mahlon Dahl
635 2nd St. SE
Milaca, MN 56353

Mr. John Chapureen - AMC
55 Sherburne
Rm. 203
St. Paul, MN 55103

Henry Gredvig
Polk Co. Assessor
Polk Co. Courthouse
Crookston, MN 56716

Farmers Union
1275 University Ave.
St. Paul, MN 55104

William Gill
Rice Co. Courthouse
Faribault, MN 55021

Jack Wimmer
P.O. Box 604
St. Cloud, MN 56301

MN George Benda
Nat'l. Livestock Feeders
Alpha, MN 56111

Leo Benham
R.R.
Chokio, MN 56221

Phillip R. Goodrich
Ext. Ag. Eng.
U of MN
St. Paul, MN 55108

Albert Steuck
Todd Co. Courthouse
Long Prairie, MN 56347

Vern. Reinhart, Ex. Dir.
Soil & Water Cons. Bd. - DNR
3rd Floor Centennial Bldg.
St. Paul

David Zimmerman
Waseca Co. Courthouse
Waseca, MN 56093

Glen McTaggart
Wilkin Co. Courthouse.
Breckenridge, MN 56520

Purebred Dairy Cattle Assn of MN
101 Haecker Ha
University of [redacted]
St. Paul, MN [redacted]55103

Arthur F. Stor
Brown Co. Cou[redacted]ouse
New Ulm, MN [redacted]6073

MN Farm Bureau Federation
1976 Wooddale Dr.
P.O. Box 43370
St. Paul, MN 55164

Bruce Benson
Carlton Co. Courthouse
Carlton, MN 55718

Robert Rupn
The Webb Co.
1999 Shepard Road
St. Paul, MN 55116

MN Pork Prod. Assn.
208 Fairview Dr.
Albert Lea, MN 56007

Edward Monteleone
Henn Co. Dept. of Env. & Energy
320 Washington Ave. S.
Hopkins, MN 55343

Rollin Dennistown
Dept. of Agriculture
State Office Building

Rick Frank
Houston Co. Courthouse
Caledonia, MN 55921

Benton County Coordinators Off.
Court Office
Foley, MN 56329

Vern Massie
Hubbard Co. Courthouse
Park Rapids, MN 56470

Fairlin Farms, Inc.
J.R. Weldy-C.L. Weldy
Franklin, MN 55333

Dennis Hanslman
Env. Health & Boil. Cont.
Box 64
Jackson, MN 56143

Linden Olson
R. - 2, Box 23
Worthington, MN 56187

Marlyn D. Hanson
Lac Qui Parle Co. Courthouse
Madison, MN 56256

Blue Earth County Soil & Water
Conservation District
432 Belle Mar Mall, Box 327
Mankato, MN 56001

Art Poll
LeSueur Hwy. Bldg.
Le Center, MN 56057

Ruth Driscoll
R.R. 2 - Box 1
Blue Earth, MN 56013

Merle Hanson
Co. Feedlot P.C. Officer
Lake Benton, MN 56149

ADDITIONAL NAMES FOR GENERAL MAILING LIST

Markkula, Bruce, 6533 Thomas Ave. So., Richfield, Mn. 55423

Dean, Marian Mrs., 135 Colorado St. East, St. Paul, Mn. 55107

Pettry, Shelby, National Homes Corp., P.O. Box 7680, La Fayette, Indiana 47903

Stone, John F., Moss, Flaherty, Clarkson & Fletcher, 2350 IDS Center, Mpls, Mn. 55402

Swanson, Dale, Suite 113 Professional Bldg., 1068 So. Lake St., Forest Lake, Mn. 55025

Johnson, Kel, MACI, Hanover Bldg., St. Paul, Mn. 55101

Wick, Louis, 8212 Clinton Ave., Bloomington, Mn. 55420

Irving Beyer 1 *
R.R. #2
Red Lake Falls, MN. 56750

Leonard Kellerhius 2
Naytquwaush, MN. 56566

Darlene Vobejda 3
9015 River Road
Grand Rapids, MN. 55744

James Q. Nelson 4 *
Box 165
Morris, MN. 56527

Howard Tyrrell 5 *
R.R. #1, Box 193
Browerville, MN. 56438

Leonard Pikal 6E
Box 93
Brownton, MN. 55312

Willard Pearson 6W
R.R. #1
Dawson, MN. 56232

7E

Jerome Bechtold 7W *
R.R. #4
St. Cloud, MN. 56301

Gordon Ellefson 8 *
R.R. #1
Jackson, MN. 56143

Neil Saxton 9
Route 1, Box 224
Fairmont, MN. 56031

Lincoln Paulson 10
R.R. #5
Faribault, MN. 55021

William Dilks
Carver County Courthouse
Chaska, MN. 55318

Metro

Dean Aarvig 6E
Route #1
Willmar, MN. 56201

Lyman Schmidt 2
LaPorte, MN. 56461

Harold Heinecke 6W
333 E. Rooney
Appleton, MN. 56208

Loren Rutter 3
Box 83
Kinney, MN. 55758

Fred Ahlgren 7E
512 S. Union
Mora, MN. 55051

Alexander Dean
Metro 208 Advisory Chr.
315 East Grant Street
Minneapolis, MN. 55404

im Westphal
ivers Section, DNR
B 95 Centennial Bldg.

Robert Hutchinson
Anoka Co. Comprehensive Health
Dept. - Courthouse
Anoka, MN 55303

James Bosch
c/o Land-O-Lakes
614 McKinley Place
Minneapolis, MN 55413

Jerry Kendall
MN Farmers Union
1717 University Ave.
St. Paul, MN 55104

Jerry Weldy
RFD
Franklin, MN 55333

Ted Shields - MACI
200 Hanover Building
480 Cedar St.
St. Paul, MN 55101

Kathy Kendall
Morrisson County Planning
Old Courthouse
Little Falls, MN 56345

Prof. Delane Welsch
Dept. of Ad. & App. Economics
Univ. Of MN
St. Paul, MN 55108

Randy Sternberg
LeRoy-Ostrander Public Schools
LeRoy, MN 55951

Shirley Rutherford
Dept. of Agriculture
506 State Office Buildihng

Mrs. C.D. Schleiger
Rt# 3, Box 262
Bemidji, MN 56601

Mike Hagedorn
Box 116
Luverne, MN 56156

Paul Bugbee, SEc.
Koronis Lake Assn.
Rt. 3, Lake Koronis
Paynesville, MN 56362

Doris Nelson
Barr Eng.
6800 France Ave. S.
Minneapolis, MN 55435

Jack Sjoholm
807 Transportation Bldg.
MDOT

G. Robert Johnson
4344 IDS Center
Minneapolis, MN 55402

Gary Jackson
1815 University Ave.
Madison, WI 53706

Ernest E. Freier
Freier Enterprises
R# 2, Box 283
Lake Crystal, MN 56055

Linda Wattson
DNR River Section
B 95 Centennial Bldg.

ADMIN 1000 (REV. 4/77)

STATE OF MINNESOTA

DEPARTMENT Attorney General - MPCA

Office Memorandum

TO : JOANNE HINDERAKER
Special Assistant Attorney General
Department of Administration

DATE: 11/1/79

FROM : ROBERT C. MOILANEN
Special Assistant Attorney General
Minnesota Pollution Control Agency

PHONE: 7702

SUBJECT: Animal Feedlot Rules, 6 MCAR §§4.8051-52

Pursuant to our conversation, I am enclosing the following documents relating to the above-entitled matter:

1. Agency Board Agenda Items from December 19, 1978, and February 27, 1979. These Agenda Items contain staff resolutions which were adopted by the Board. As you will note, the Executive Director is delegated the authority to sign all necessary documents relating to the hearing.

2. Two copies of Minn. Rules SW 51-61 repealed.

3. Two copies of page 11 correcting the typographical error which cited to 6 MCAR §4.8051D.1.b.(1) instead of correctly citing to 6 MCAR §4.8051D.1.c.(1).

4. Agency Board Agenda Items from August 28, 1979, and September 25, 1979. These items contain a staff memorandum which briefly explains the need for and reasonableness of the change from six to ten months for all interim permits.

Finally, I have discussed your concern with respect to the use of the word "may" and "shall" on page 12 with the Agency staff. The staff's position is that the use of the word "may" is justified based on the fact that the Agency Board should not obligate itself to issue permits in which a potential pollution hazard will not be mitigated within ten months. Certainly, the Agency should not issue permits in which irreparable environmental harm will take place, nor should they issue permits when there is a violation of their own regulations. As technology in this area changes, so may the grounds or basis for revocation or denial of a permit. Therefore, while I understand and appreciate the concern which you have raised about specifying the grounds for permit denial, the Agency feels that it would be more desirable to handle conflicts over the reasonable grounds for denial during the course

of contested case proceedings. This case-by-case analysis will protect the due process rights of all potential applicants.

Thank you for your thorough review. Don't hesitate to contact me with respect to any further questions which you have.

RCM:ds
cc: Wayne Anderson
Encs.

RECEIVED
NOV 1 1979
ADMINISTRATIVE AGENCIES

d. When more than one person is in possession, control or has title to a single animal feedlot, only one person needs to apply for an animal feedlot permit, however, the permit application must list all owners in accordance with 6 MCAR §4.8051 D.1.c.(1). All owners are responsible for compliance with these rules and permits or certificates of compliance issued pursuant to these rules.

2. The animal feedlot permit application shall be reviewed by the county feedlot pollution control officer or by the Director if a county permit processing program has not been implemented in the county where the animal feedlot will be located.

a. No permit shall be required when the review of the application indicates that all animal manures are being used as domestic fertilizer and that a potential pollution hazard does not exist or that potential pollution hazards have been satisfactorily addressed by corrective or protective measures. However, a certificate of compliance shall be obtained by the owner of such an animal feedlot prior to commencing operation of the new feedlot, changing the operation of an existing feedlot or changing ownership of an existing feedlot.

b. The Agency shall consider the issuance of a permit when the review indicates that a potential pollution hazard exists and has not been addressed by corrective or protective measures or when manure is not being used as a domestic fertilizer.

Pursuant to Minn. Stat. § 15.0412, subd. 4, agencies must hold public hearings on proposed new rules and/or proposed amendment of existing rules. Notice of intent to hold a hearing must be published in the *State Register* at least 30 days prior to the date set for the hearing, along with the full text of the proposed new or amended rule. The agency shall make at least one free copy of a proposed rule available to any person requesting it.

Pursuant to Minn. Stat. § 15.0412, subd. 5, when a statute, federal law or court order to adopt, suspend or repeal a rule does not allow time for the usual rulemaking process, temporary rules may be proposed. Proposed temporary rules are published in the *State Register*, and for at least 20 days thereafter, interested persons may submit data and views in writing to the proposing agency.

Pollution Control Agency

Proposed Rules for the Control of Pollution from Animal Feedlots

Notice of Hearing

Notice is hereby given that rule hearings in the above-entitled matter will be held at the following locations:

April 12, 1979, Thursday, Board Room of the Minnesota Pollution Control Agency, 1935 West County Road B-2, Roseville, Minnesota, convening at 10:00 a.m.

April 16, 1979, Monday, Basement Conference Room of the Minnesota Department of Transportation, 1010-21st Avenue Northwest, Industrial Park, Owatonna, Minnesota, convening at 1:00 p.m. and reconvening at 7:00 p.m.

April 17, 1979, Tuesday, Room 234 C.A.B., Southwest State University, Marshall, Minnesota, convening at 1:00 p.m. and reconvening at 7:00 p.m.

April 18, 1979, Wednesday, Commissioners Room at Becker County Courthouse, Lake Street, Detroit Lakes, Minnesota, convening at 1:00 p.m. and reconvening at 7:00 p.m.

April 19, 1979, Thursday, Meeting Room at Crow Wing County Courthouse Annex, East Laurel Street, Brainerd, Minnesota, convening at 1:00 p.m. and reconvening at 7:00 p.m.

The hearings will continue until all persons have had an opportunity to be heard. The Agency will present its witnesses and evidence in support of the adoption of the above-captioned rule primarily at the hearing in Roseville, Minnesota.

All interested or affected persons will have an opportunity to participate at the rule hearings. Statements may be made orally and written materials may be submitted at the hearing. In addition, written materials may be submitted by mail to Mr. Howard Kaibel, Office of Hearing Examiners, 1745 University Avenue, St. Paul, Minnesota 55104, (612) 296-8107, either before or after the hearings until the record is closed. The record will remain open for five working days after the rule hearings end, or for a longer period not to exceed twenty calendar days if ordered by the Hearing Examiner. In the interest of efficiency, it is suggested that those persons, organizations, or associations having a common viewpoint or interest in these proceedings join together where possible and present a single statement in behalf of such interests.

Notice: The proposed rule is subject to change as a result of the rule hearing process. The Agency therefore strongly urges those who are potentially affected in any manner by the substance of the proposed rule to participate in the rule hearing process.

The proposed rules, 6 MCAR §§ 4.8051-4.8052, would provide for the control of pollution caused by animal feedlots by establishing standards and a permitting program for animal feedlot operations. The proposed rules would also establish a cooperative program between counties and the Agency if the counties elect to establish a program. These rules are intended to supersede Minn. Rules SW 51-61, therefore, Minn. Rules SW 51-61 are being repealed. The Agency's authority for the promulgation of these rules is contained in Minn. Stat. ch. 115 and 116 (1978) generally and specifically in Minn. Stat. § 116.07, subd. 7 (1978).

Copies of the proposed rule are now available and one free copy may be obtained by writing to Mr. Wayne Anderson, Division of Water Quality, Minnesota Pollution Control Agency, 1935 West County Road B2, Roseville, Minnesota 55113. Additional copies will be available at the hearing at each location.

Notice: Any person may request notification of the date on which the Hearing Examiner's Report will be available, after which date the Agency may not take any final action on the rule for a period of five working days. Any person may request notification of the date on which the hearing record has been submitted (or resubmitted) to the Attorney General by the Agency. If you desire to be so notified, you may so indicate at the hearings. After the hearings, you may request notification by sending a written request to the Hearing Examiner (in the case of the Hearing Examiner's Report), or to the Agency (in the case of the Agency's submission or resubmission to the Attorney General).

Notice is hereby given that 25 days prior to the hearings, a Statement of Need and Reasonableness will be available for review at the Agency and at the Office of Hearing

Examiners. This Statement of Need and Reasonableness will include a summary of all of the evidence which will be presented by the Agency at the Hearing justifying both the need for and the reasonableness of the proposed rules. Copies of the Statement of Need and Reasonableness may be obtained from the Office of Hearing Examiners at a minimal charge.

Please be advised that Minn. Stat. ch. 10A (1978) requires each lobbyist to register with the Ethical Practices Board within five days after he commences lobbying. Lobbying includes attempting to influence rulemaking by communicating or urging others to communicate with public officials. A lobbyist is generally any individual who spends more than $250.00 per year for lobbying or any individual who is engaged for pay or authorized to spend money by another individual or association and who spends more than $250.00 per year or five hours per month lobbying. The statute in question provides certain exceptions. Questions should be directed to the Minnesota Ethical Practices Board, 41 State Office Building, St. Paul, Minnesota 55155, telephone (612) 296-5615.

February 27, 1979

Terry Hoffman
Executive Director

Rules as Proposed

MINNESOTA POLLUTION CONTROL AGENCY'S
Rules for the Control of Pollution from Animal Feedlots

Preamble

An adequate supply of healthy livestock, poultry, and other animals is essential to the well-being of Minnesota citizens and the nation. These domesticated animals provide our daily source of meat, milk, eggs, and fiber. Their efficient, economic production must be the concern of all consumers if we are to have a continued abundance of high-quality, wholesome food and fiber at reasonable prices.

However, livestock, poultry, and other animals produce manure which may, when improperly stored, transported, or disposed, negatively affect Minnesota's environment. When animal manure adds to air, water, or land pollution in the State of Minnesota, it must be controlled.

The following rules for the control of livestock, poultry, and other animal wastes have been promulgated to provide protection against pollution caused by manure from domesticated animals. However, these rules recognize that animal manure often provides beneficial qualities to the soil and to the production of agricultural crops.

These rules provide for a cooperative program between counties and the Minnesota Pollution Control Agency (hereinafter Agency). County programs, in many instances, represent considerable experience and sensitivity to local agricultural practices and to successful soil and water conservation. Pollution control measures, where deemed necessary by the Agency, should be individually designed and developed to provide the site specific controls needed for the operation in question. Therefore, a joint county-state program is desirable because it will insure local involvement, minimal disruption to agricultural operations and protect the environment from further degradation.

These rules comply with the policy and purpose of the State of Minnesota in regard to the control of pollution as set forth in Minn. Stat. chs. 115 and 116 (1978). Specifically, these rules are promulgated in accordance with Minn. Stat. § 116.07 (1978) and Minn. Stat. § 115.03 (1978). Finally, these rules shall have the force and effect of law and shall supersede and replace Minn. Rules SW 51-55 (1971) and Minn. Rules SW 56-61 (1974) upon filing with the Secretary of State.

6 MCAR § 4.8051 Rules for the control of pollution from animal feedlots.

A. General applicability. The provisions of these rules govern the storage, transportation, disposal, and utilization of animal manure and the application for and issuance of permits and certificates of compliance for construction and operation of animal manure management and disposal or utilization systems for the protection of the environment.

B. Definitions. All terms employed in these animal feedlot rules for which definitions are given in Minn. Stat. §§ 115.07 and 116.06 (1978), shall have the meaning ascribed to them therein. The terms specified below shall have the meanings ascribed to them:

1. "Agency." The Minnesota Pollution Control Agency as established in Minn. Stat. ch. 116 (1978).

2. "Animal feedlot." A lot or building or combination of lots and buildings intended for the confined feeding, breeding, raising or holding of animals and specifically designed as a confinement area in which manure may accumulate, or where the concentration of animals is such that a

KEY: RULES SECTION — Underlining indicates additions to proposed rule language. ~~Strike outs~~ indicate deletions from proposed rule language. PROPOSED RULES SECTION — Underlining indicates additions to existing rule language. ~~Strike outs~~ indicate deletions from existing rule language. If a proposed rule is totally new, it is designated "all new material."

vegetative cover cannot be maintained within the enclosure. For purposes of these rules, open lots used for the feeding and rearing of poultry (poultry ranges) shall be considered to be animal feedlots. Pastures shall not be considered animal feedlots under these rules.

3. "Animal manure." Poultry, livestock or other animal excreta or a mixture of excreta with feed, bedding or other materials.

4. "Animal unit." A unit of measure used to compare differences in the production of animal manures that employs as a standard the amount of manure produced on a regular basis by a slaughter steer or heifer. For purposes of this rule, the following equivalents shall apply:

Animal	Unit
one mature dairy cow	1.4 animal unit
one slaughter steer or heifer	1.0 animal unit
one horse	1.0 animal unit
one swine over 55 pounds	.4 animal unit
one duck	.2 animal unit
one sheep	.1 animal unit
one swine under 55 pounds	.05 animal unit
one turkey	.018 animal unit
one chicken	.01 animal unit

For animals not listed above, the equivalent animal unit shall be defined as the average weight of the animal divided by 1,000 lbs.

5. "Certification of compliance." A letter from the Agency or the county feedlot pollution control officer to the owner of an animal feedlot stating that the feedlot meets Agency requirements.

6. "Change in operation." An increase in the maximum number of animal units which can be confined at the site or a change in the construction or operation of an animal feedlot that would affect the storage, handling, utilization, or disposal of animal manure.

7. "Corrective or protective measures." A practice, structure, condition, or combination thereof which prevents or reduces the discharge of pollutants from an animal facility to a level in conformity with Agency rules.

8. "County Feedlot Pollution Control Officer." A county employee who is knowledgeable in agriculture and who is designated by the county board to receive and process animal feedlot permit applications.

9. "Director." The Executive Director of the Minnesota Pollution Control Agency whose duties are defined in Minn. Stat. § 116.03 (1978).

10. "Domestic fertilizer."

a. Animal manure that is put on or injected into the soil to improve the quality or quantity of plant growth, or

b. Animal manure that is used as compost, soil conditioners, or specialized plant beds.

11. "Flood plain." The areas adjoining a watercourse which have been or hereafter may be covered by a large flood known to have occurred generally in Minnesota and reasonably characteristic of what can be expected to occur on an average frequency in the magnitude of the 100 year recurrence interval.

12. "Interim Permit." A permit issued by the Executive Director of the Agency or the county feedlot pollution control officer which expires no longer than six months from the date of issue.

13. "Manure storage area." An area associated with an animal feedlot where animal manure or runoff containing animal manure is stored until it can be utilized as domestic fertilizer or removed to a permitted animal manure disposal site. Animal manure packs or mounding within the animal feedlot shall not be considered to be manure storage for these regulations.

14. "New animal feedlot." An animal feedlot constructed and operated at a site where no animal feedlot existed previously or where an existing animal feedlot has been abandoned or unused for a period of five years or more.

15. "National Pollutant Discharge Elimination System (NPDES) Permit." A permit issued by the Agency for the purpose of regulating the discharge of pollutants from point sources including concentrated animal feeding operations.

16. "Owner." A person having possession, control, or title to one or more animal feedlots.

17. "Pasture." Areas where grass or other growing plants are used for grazing and where the concentration of animals is such that a vegetation cover is maintained during the growing season except in the immediate vicinity of temporary supplemental feeding or watering devices.

18. "Permit." A document issued by the Agency, at no charge to the applicant, which contains requirements, conditions and compliance schedules relating to the discharge of animal manure pollutants.

19. "Potential pollution hazard." A condition which indicates a potential for pollution of the land or waters of the state including:

a. An animal feedlot or manure storage area whose

boundaries are located within designated shoreland or flood plain, or are located in an area draining directly to either a sinkhole or draining to an area with shallow soils overlying a fractured or cavernous rock, or are located within 100 feet of a water well, or

b. An animal feedlot or manure storage area whose construction or operation will allow a discharge of pollutants to surface waters of the state in excess of applicable standards during a rainstorm event of less magnitude than the 25 year-24 hour event, or will allow uncontrolled seepage of pollutants into the ground water, or will violate any applicable state rules and regulations.

20. "Shoreland." Land located within the following distances from the ordinary high water elevation of public waters:

a. Land within 1,000 feet from the normal high watermark of a lake, pond or flowage, and

b. Land within 300 feet of a river or stream or the landward side of flood plain delineated by ordinance on such a river or stream, whichever is greater.

21. "Sinkhole." A surface depression which is connected to a cavernous bedrock (generally limestone) by a channel or collapse of the overlying formation.

C. Animal feedlot pollution control requirements.

1. No animal feedlot or manure storage area shall be constructed, located and operated so as to create or maintain a potential pollution hazard unless a certificate of compliance or an Agency permit has been issued.

2. All vehicles used to transport animal manure on county, state and interstate highways or through municipalities shall be leakproof. This shall not apply to animal manure being hauled to fields adjacent to feedlot operations for use as domestic fertilizer.

3. Animal manures, when utilized as domestic fertilizer, shall not be stored for longer than one year and shall be applied at rates not exceeding local agricultural crop nutrient requirements.

4. Any animal manure not utilized as domestic fertilizer shall be treated or disposed of in accordance with applicable state rules and regulations.

5. The owner of any animal feedlot shall be responsible for the storage, transportation and disposal of all animal manure generated in a manner consistent with the provisions herein.

D. Animal feedlot permitting procedure.

1. Animal feedlot permit application requirements.

a. The owner of a proposed or existing animal facility for greater than 10 animal units shall be required to make application to the Director for a permit when any of the following conditions exist:

(1) A new animal feedlot is proposed; or

(2) A change in operation of an existing animal feedlot; or

(3) Ownership of an existing animal feedlot is changed; or

(4) An inspection by the Agency staff or a county feedlot pollution control officer determines that an existing animal feedlot creates or maintains a potential pollution hazard; or

(5) A National Pollutant Discharge Elimination System (NPDES) permit application is required under state or federal rules and regulations.

b. The permit application shall include the following items:

(1) A completed permit application form, signed by the owner, which includes animal types, number of animals, location of facilities, soil conditions, and hydrogeological conditions.

(2) A map or aerial photograph showing the location of all wells, buildings, lakes, and watercourses within 1,000 feet of the proposed feedlot.

(3) A manure management plan including manure handling and application techniques, acreage available for manure application and plans for any proposed manure storage structure. Any plans for manure storage structures of 500,000 gallons capacity or larger shall have been prepared or approved by a registered professional engineer or qualified governmental employee.

(4) Such additional information relating to the specific site or the specific feedlot operation as may be

KEY: RULES SECTION — Underlining indicates additions to proposed rule language. ~~Strike outs~~ indicate deletions from proposed rule language. PROPOSED RULES SECTION — Underlining indicates additions to existing rule language. ~~Strike outs~~ indicate deletions from existing rule language. If a proposed rule is totally new, it is designated "all new material."

requested by the Director to evaluate compliance with federal and state rules and regulations.

2. The animal feedlot permit application shall be reviewed by the county feedlot pollution control officer or by the Director if a county permit processing program has not been implemented in the county where the animal feedlot will be located.

a. No permit shall be required when the review of the application indicates that all animal manures are being used as domestic fertilizer and that a potential pollution hazard does not exist or that potential pollution hazards have been satisfactorily addressed by corrective or protective measures. However, a certificate of compliance shall be obtained by the owner of such a facility prior to commencing operation of the new feedlot or changing the operation of an existing feedlot.

b. The Agency shall consider the issuance of a permit when the review indicates that a potential pollution hazard exists and has not been addressed by corrective or protective measures or when manure is not being used as a domestic fertilizer.

(1) An interim permit shall be issued by the Director when the potential pollution hazard will be corrected within six months of the date of application. When all necessary corrective and protective measures have been installed on a permitted animal feedlot, the Director shall terminate the permit and shall issue a certification of compliance.

(2) An animal feedlot permit may be issued by the Agency when the potential pollution hazard will not be corrected within six months of the date of application or when manure is not used as a domestic fertilizer. This permit shall contain such conditions and requirements as the Agency deems necessary in order to insure compliance with applicable state rules and regulations.

(3) If it is determined during the review process that an animal feedlot must obtain a National Pollutant Discharge Elimination System (NPDES) permit, the applicant shall be notified and a permit shall be processed and issued as prescribed in Minn. Rule WPC 36 (1974).

E. Existing permits for the construction and operation of livestock feedlots, poultry feedlots and other animal lots. The conditions and provisions of all Agency animal feedlot permits issued under Minn. Rules SW 51-61 before the effective date of these rules shall continue to be in effect. Upon application for a change in operation or change of ownership of an existing, permitted animal feedlot, the permit shall be reconsidered pursuant to these rules.

F. Procedural rules and appeals. All requests for hearings, appeals and other procedural matters not specifically provided for herein shall be governed by the Agency Rules of Procedure, the Rules of the Office of Hearing Examiners and other applicable laws and rules.

G. Severability. If any provision of this rule or the application thereof to any person or circumstances is held to be invalid, such invalidity shall not affect other provisions of this rule or application of any other part of this rule which can be given effect without application of the invalid provision. To this end the provisions of all sections, subsections and subdivisions herein and the various applications thereof are declared to be severable.

H. Variance from rules. Any person may apply for a variance from any requirements of this rule. Such variances shall be applied for and acted upon by the Agency in accordance with Minn. Stat. § 116.07, subd. 5 (1978) and other applicable statutes and rules.

6 MCAR § 4.8052 Rules for the processing of animal feedlot permit applications by counties.

A. General applicability. Any Minnesota county board may, by resolution, assume responsibility for processing applications for animal feedlot permits as authorized by Minn. Stat. § 116.07, subd. 7 (1978). The provisions of these rules shall govern the exercise of approval and supervising authority by the Agency with respect to the processing of animal feedlot permit applications by a county.

B. County processing procedure for animal feedlot permit applications.

1. Any Minnesota county board desiring to assume responsibility for processing animal feedlot permit applications shall:

a. Submit to the Director a resolution duly adopted by the county board requesting permission to process animal feedlot permit applications in the county. Such resolution shall be accompanied by a statement describing the permit application processing procedure to be used by the county.

b. Receive written approval from the Agency authorizing the processing of animal feedlot permit applications within the county.

c. Designate a county feedlot pollution control officer as having the primary responsibility for the animal feedlot permit program and charge him with the following duties:

(1) Distribution of permit application forms made available by the Director to those required to make application for the permit.

(2) Provide, where requested, assistance to appli-

cants to insure that application forms are properly completed.

(3) Receive and review completed application forms and conduct such inspections as necessary to determine if the proposed animal facility will comply with applicable state rules and regulations and applicable local ordinances.

(4) Maintain a record of all correspondence and material relating to animal feedlot applications, certifications, and permits issued by the county board.

2. The processing of applications for animal feedlot permits by a county board, as defined in Minn. Stat. § 116.07, Subd. 7(a), (b), and (c) (1978), shall be accomplished according to the following procedure:

a. For animal feedlots with less than 1,000 animal units where manure is used as a domestic fertilizer and with no potential pollution hazard, the county feedlot pollution control officer shall certify to the Agency and the applicant that the animal feedlots comply with all aspects of 6 MCAR § 4.8051 and that no animal feedlot permit is required.

b. For animal feedlots of less than 300 animal units where manure is used as a domestic fertilizer and where all potential pollution hazards have been mitigated by protective or corrective measures the county feedlot pollution control officer shall certify to the Agency and to the applicant that the animal feedlots comply with 6 MCAR § 4.8051 and that no animal feedlot permit is required.

c. The county feedlot pollution control officer shall forward to the Director, with recommendations and comments, all animal feedlot permit applications which fall within the following categories:

(1) Animal feedlots of 1,000 animal units or more; or

(2) Animal feedlots of more than 300 animal units where a potential pollution hazard has been mitigated through corrective or protective measures; or

(3) Animal feedlots with a potential pollution hazard which has not been mitigated by corrective or protective measures; or

(4) Animal feedlots where manure is not used as domestic fertilizer;

(5) Animal feedlots for which further technical review is desired by the county feedlot pollution control officer.

3. Any county board which has assumed responsibility for processing feedlot permit applications in accordance with 6 MCAR § 4.8052 B.1. may issue, deny, modify, impose conditions upon or revoke interim permits for animal feedlots smaller than 300 animal units where animal manure is used as a domestic fertilizer and with a potential pollution hazard which will be mitigated by corrective or protective measures within six months of the date of the animal feedlot permit application. These permits shall be issued, denied, modified, have conditions imposed upon them or revoked in conformance with the following requirements:

a. In order for the county to issue an interim permit:

(1) The Director must receive written notification of the intention of the county to issue an interim permit. Such notification must include the completed permit application, a copy of the draft permit proposed for issuance by the county and documentation concerning the potential pollution hazard and the corrective or protective measures to be taken by the owner;

(2) The Director shall, after receipt of written notification of intent to issue an interim permit, review the draft interim permit within 15 days to determine compliance with applicable Agency rules and shall approve, suspend, modify, or reverse the issuance of the interim permit. If the Director approves issuance of the interim permit, the interim permit and a certificate for display shall be returned to the county for issuance to the operator. If the Director suspends, modifies or reverses the issuance of the interim permit, the applicant retains all rights of appeal set out in 6 MCAR § 4.8052 C.

b. In order for a county to modify or impose conditions upon a interim permit the county shall notify the Director in writing of its intention to modify or impose conditions upon an interim animal feedlot permit. Such notification must include a copy of the interim permit together with the intended modifications and conditions. The Director shall determine compliance with the provisions of applicable Agency rules and shall either approve, suspend, further modify or reverse the recommended modification or conditions within 15 days of receipt of the aforementioned notice of intent. The county shall be notified of said Agency action. The applicant retains all rights of appeal set out in 6 MCAR § 4.8052 C. If the Director fails to act within 15

KEY: RULES SECTION — Underlining indicates additions to proposed rule language. ~~Strike outs~~ indicate deletions from proposed rule language. PROPOSED RULES SECTION — Underlining indicates additions to existing rule language. ~~Strike outs~~ indicate deletions from existing rule language. If a proposed rule is totally new, it is designated "all new material."

days after the receipt of the draft interim permit from the county, the county may proceed to issue the interim permit.

(3) If the county has issued an interim permit, the county feedlot pollution control officer shall terminate the permit and issue a certificate of compliance when all necessary corrective and protective measures have been installed.

c. In order for a county to revoke an interim permit a copy of the interim permit together with a written justification for revocation must be submitted to the Director for review. The Director shall, after receipt of the justification for revocation by the county, review the matter within 15 days to determine compliance with the provisions of applicable Agency rules. The county must receive written approval of the interim permit revocation from the Agency prior to taking action. Where a revocation has been approved by the Agency, the applicant must be informed in writing by the county of the reasons for revocation and the applicant shall retain all rights of appeal set out in 6 MCAR § 4.8052 C.

d. In the case of a denial of an interim permit application by the county board, the applicant shall be informed by the county in writing of the reasons for denial and shall be informed of applicable appeal procedures. The applicant shall retain all rights of fundamental fairness afforded by law and the applicant may make an appeal to the Agency to review the county's action. Such a denial by a county shall be without prejudice to the applicant's right to an appearance before the Agency to request a public hearing or to file a further application after revisions are made to meet objections specified as reasons for denial. The Agency shall approve, suspend, modify or reverse the denial of an interim permit if the matter has been appealed to the Agency.

4. The Director shall review within 15 days all animal feedlot permit applications forwarded by the county and shall notify the county of the status of the review and of any intended action with respect to all properly completed animal feedlot permit applications.

5. A county no longer wishing to continue in the application review process shall submit a resolution stating its reasons for withdrawal and the effective date of withdrawal to the Director.

6. If the Agency finds that a county program is not meeting the requirements of these rules, the Agency may, after giving the county written notice and an opportunity to respond, revoke its approval of the county's application review authority.

C. Procedural rules and appeals. All requests for hearings, appeals and other procedural matters not specifically provided for herein shall be governed by the Agency Rules of Procedure, the Rules of the Office of Hearing Examiners and other applicable laws and rules.

D. Severability. If any provision of this rule or the application thereof to any person or circumstances is held to be invalid, such invalidity shall not affect other provisions of this rule or application of any other part of this rule which can be given effect without application of the invalid provision. To this end the provisions of all sections, subsections and subdivisions herein and the various applications thereof are declared to be severable.

E. Variance from rules. Any person may apply for a variance from any requirements of this rule. Such variances shall be applied for and acted upon by the Agency in accordance with Minn. Stat. § 116.07, subd. 5 (1978) and other applicable statutes and rules.

~~MINNESOTA POLLUTION CONTROL AGENCY'S~~
~~Regulations for the Control of Wastes~~
~~from Livestock Feedlots,~~
~~Poultry Lots and Other Animal Lots~~

~~Preamble~~

~~An adequate supply of health livestock, poultry and other animals is essential to the well-being of Minnesota citizens and the nation. They provide our daily source of meat, milk, eggs and fiber. Their efficient, economic production must be the concern of all consumers if we are to have a continued abundance of high quality, wholesome food and fiber at reasonable prices.~~

~~However, livestock, poultry and other animals produce wastes which may, when improperly stored, transported or disposed of, affect Minnesota's environment. Where such wastes could add to air, water or land pollution they must be controlled.~~

~~The following regulations for the control of livestock, poultry and other animal wastes are drafted to provide protection against pollution by domesticated animals. They are written with full understanding that animal wastes are often by-products beneficial to the economic production of agricultural crops.~~

~~These regulations are written to provide the greatest safe latitude in compliance, taking into consideration that agriculture has 20 to 30 years of experience in successful soil and water conservation. Control measures, where deemed necessary, are to be individually designed and developed to provide the specific controls needed for the operation in question.~~

~~These regulations comply with the specific policy and purpose of the State of Minnesota in regard to solid waste~~

control as set forth in Laws 1969, Chapter 1046 (Codified as Minnesota Statutes, Section 116.07).

Subd. 2. The Pollution Control Agency shall also adopt standards for the control of the collection, transportation and disposal of solid waste for the prevention and abatement of water, air and land pollution, recognizing that due to variable factors, no single standard of solid waste control is applicable to all areas of the State. In adopting standards, the Pollution Control Agency shall give due recognition to the fact that elements of control, which may be reasonable and proper in densely populated areas of the State, may be unreasonable and improper in sparcely populated or remote areas of the State, and it shall take into consideration in this connection such factors, including others which it may deem proper, as existing physical conditions, topography, soils and geology, climate, transportation and land use. Such standards of solid waste control shall be premised on technical criteria and commonly accepted practices.

Subd. 4. Pursuant and subject to the provision of Chapter 15, and the provisions hereof, the Pollution Control Agency may adopt, amend and rescind regulations and standards having the force of law relating to any purpose within the provisions of this act for the collection, transportation and disposal of solid waste and the prevention, abatement or control of water, air and land pollution, which may be related thereto, and the deposit in or on land of any other material that may tend to cause pollution. Any such regulation or standard may be of general application throughout the State or may be limited as to times, places, circumstances, or conditions in order to make due allowance for variations therein. Without limitations, regulations or standards may relate to collection, transportation, disposal equipment, location, procedures, methods, systems or techniques or to any other matter relevant to the prevention, abatement or control of water, air and land pollution which may be advised through the control of collection, transportation and disposal of solid waste, and the deposit in or on land of any material that may tend to cause pollution.

Wastes other than solid wastes are subject to control under the authority of Minnesota Statutes, Section 115.01-115.09, and other applicable standards, regulations, orders or permits of the Ageney relating to water pollution and disposal of sewage or other wastes.

SW-51 Applicability, Definitions and General Conditions for Handling, Storage, Transportation and Disposal of Animal Wastes; Severability and Variances.

Applicability

These are regulations and standards the provisions of which govern the storage, transportation and disposal of animal wastes and the registration and issuing of permits for the construction and operation of animal waste disposal systems for the protection of the environment in keeping with Minnesota Statutes, Chapters 115 and 116 and Laws 1969, Chapter 847, 931 and 1046.

Definitions

For the purpose of these regulations:

(1) "Agency" Shall mean the Minnesota Pollution Control Agency, its agents or representatives.

(2) "Animal Manuure" shall mean poultry, livestock or other animal excreta or mixture with feed, bedding or other materials.

(3) "Animal Wastes" shall mean animal manure which is stored, transported or disposed of as an unwanted waste material and which poses a potential pollution hazard to the land, air or waters of the State. This shall not include animal manure used as fertilizer.

(4) "Feedlot Operator" Shall mean an individual, a corporation, a group of individuals, a partnership, joint venture, owner or any other business entity having charge or control of one or more livestock feedlots, poultry lots or other animal lots.

(5) "Fertilizer" Shall mean (a) animal manure which is put on or in the soil to improve the quality or quantity of plant growth, or (b) animal manure which is used as a compost, soil conditioners, or specialized plant beds.

(6) "Floodway" Is as defined in Minnesota Statutes, Section 104.05, Subdivision 4.

(7) "Land Pollution" Shall mean the presence in or on the land of any solid waste in such quantities of such nature and duration, and under such conditions as would affect injuriously any waters of the State, create air contaminates or cause air pollution.

(8) "Livestock" Shall mean beef and dairy cattle, horses, swine and sheep.

(9) "Livestock Feedlot" Shall mean the confined feeding, breeding, raising or holding of livestock in enclosures specifically designed as confinement areas in which

KEY: RULES SECTION — Underlining indicates additions to proposed rule language. Strike outs indicate deletions from proposed rule language. PROPOSED RULES SECTION — Underlining indicates additions to existing rule language. Strike outs indicate deletions from existing rule language. If a proposed rule is totally new, it is designated "all new material."

animal manure may accumulate. This shall not include areas normally used for pasture or crops.

(10) "Odor" As stated in Minnesota Administrative Rules and Regulations APC 9(c). The odor of growing vegetation, domestic fertilizers, insecticides and other natural odors shall not be considered objectionable.

(11) "Other Animal Lot" Shall mean the confined feeding, breeding, boarding or holding of any animal; except livestock raised for its pelt, consumption as food, pleasure or sport, including, but not limited to, rabbits, mink, dogs, ponies, buffalo and deer.

(12) "Pasture" Shall mean areas where grass or other growing plants are used as food for grazing. A pasture shall be deemed a livestock feedlot or poultry lot when the concentration of livestock or poultry is such that a vegetation cover is not maintained except in the immediate vicinity of temporary supplemental feeding or watering devices.

(13) "Poultry" Shall mean all domestically raised fowl, including but not limited to, chickens, turkeys, ducks, geese and game birds.

(14) "Poultry Lot" Shall mean (a) The place of confined feeding, hatching, raising, or holding of poultry in enclosures, yards or pens where animal manure may be accumulated; or (b) Range areas not normally used for pasture or crops, in which animal manure may accumulate and be carried directly or indirectly to waters of the State or constitute a potential pollution hazard.

(15) "Shoreland" Is as defined in Minnesota Statutes, Section 105.485, Subdivision 2.

(16) "Sinkhole" Shall mean a hole worn through bedrock into which surface water drains to an underground channel.

(17) "Solid Waste" Solid waste is garbage, refuse and other discarded solid materials, except animal waste used as fertilizer, including solid waste materials resulting from industrial, commercial and agricultural operations, and from community activities. Solid waste does not include earthen fill, boulders, rock and other materials normally handled in construction operations, solid or dissolved materials in domestic sewage or other significant pollutants in water resources, such as silt, dissolved materials in irrigation return flows, or other common water pollutants.

(18) "Storage Area" Shall mean an area associated with a livestock feedlot, poultry lot or other animal lot in which animal manure is placed for storage until it can be utilized as fertilizer or removed to a permanent disposal site. This shall not include animal manure packs or mounding within the feedlot area.

(19) "Potential Pollution Hazard" shall mean a condition which may in the reasonably foreseeable future cause pollution of the land, air or waters of the State.

General Conditions

All animal manure shall be stored, transported and disposed of in a manner consistent with the requirements of these regulations. The Agency is responsible for enforcement of these regulations in cooperation with local governing bodies which may adopt these regulations for use in local laws, ordinances or regulations.

Severability

If any provision of any regulation or the application thereof to any person or circumstances is held to be invalid, such invalidity shall not affect other provisions or application of any other part of such regulations or any other regulations which can be given effect without the invalid provision of application, and to this end the provisions of all regulations and the various applications thereof are declared to be severable.

Variances

Where upon written application of the responsible person or persons the Agency finds that by reason of exceptional circumstances strict conformity with any provisions of the regulation contained herein would cause undue hardship, would be unreasonable, impractical or not feasible under the circumstances, the Agency may permit a variance from these regulations upon such conditions and within such time limitations as it may prescribe for prevention, control or abatement of land, air or water pollution in harmony with the intent of the State and any applicable Federal laws.

SW-52 Storage, Transportation and Disposal of Animal Wastes

(1) The owner and operator of any livestock feedlot, poultry lot or other animal lot shall be responsible for the storage, transportation and disposal of all animal manure generated on the property in a manner consistent with the provisions herein.

(2) All animal manure shall be stored in such a manner as to prevent the creation of a potential pollution hazard to the land, air or waters of the State.

(a) All storage areas shall be designed so as to restrict seepage, percolation or other movement of animal manure to ground waters.

(b) All storage areas shall be surrounded by a dike, wall or curb of such dimensions or construction that the storage volume will contain all the animal manure gener-

ated and divert around and prevent the entrance and admixture of snow melt and surface runoff from outside areas.

(c) All storage areas shall be sloped so that draining liquids can be collected and discharged from the area at one or more controlled discharge points.

(d) If animal manure is stored as a slurry, storage tanks shall be designed to restrict objectionable odors. This shall not apply where animals or poultry are kept on slotted floors over a pit or where outdoor holding ponds or lagoons are utilized.

(e) All storage areas shall be located so as not to pose a potential pollution hazard to local wells or sources of potable water and shall be located at least 100 feet from such wells or water sources.

(f) All stored fertilizer shall be utilized and all stored animal wastes disposed of in a manner consistent with the provisions herein as soon as weather conditions and other factors permit. In no event shall fertilizer or animal wastes be stored for mor than one year from the time of their generation unless animal manure packs or mounding is used as an operational technique.

(3) All fertilizer and animal wastes shall be transported in such a manner as to prevent the creation of a potential pollution hazard to the land air or waters of the State.

(a) All vehicles used to transport animal wastes on county, State and interstate highways or through municipalities shall be covered and durable. This shall not apply to animal manure hatled to fields for use as fertilizer. Animal wastes in slurry form shall be transported in leak proof vehicles or containers.

(b) All fertilizer and animal wastes shall be transported in compliance with the regulations of Federal, State and local governments and their regulatory agencies.

(4) All animals wastes shall be disposed of in such a manner as to prevent the creation of a potential pollution hazard to the land, air or waters of the State.

(a) Opening burning of animal waste is prohibited except as shall be allowed by the regulations of Agency.

(b) All treatment works for the control of animal wastes shall be constructed, designed and operated in accordance with statutes, regulations or criteria as administered by the Agency's Division of Water Quality.

(c) Disposal of effluents from systems for disposal of animal wastes shall be conducted in conformance with applicable criteria, rules, regulations, or standards of the Agency relating to water pollution or disposal of sewage, industrial or other wastes.

(d) Land disposal of animal wastes shall be conducted in conformance with Minnesota Administrative Rules and Regulations SW-1-11.

(e) Animal wastes or fertilizer containing dead animals or animals entrails shall bu disposed of in conformance with Minnesota Administrative Rules and Regulations SW-1-11, or regulations of the Minnesota Livestock Sanitary Board whichever may be applicable.

SW 53 Registration, Permit Issuance, Denial and Revocation

It shall be unlawful for any person to establish, maintain or operate a livestock feedlot, poultry lot or other animal lot except as provided in these regulations.

(1) The Agency may, at its discretion, require registration of existing livestock feedlots, poultry lots and other animal lots. Conditions requiring registration and registration procedures for the abatement of pollution of land, air and waters of the State shall be determined by the Agency after public hearings have been held.

(2) A permit shall be required for all new livestock feedlots, poultry lots and other animal lots beginning after the effective date of these regulations.

(3) If the Agency determines that a livestock feedlot, poultry lot or other animal lot is, in fact, polluting or constitutes a potential pollution hazard to the land, air or waters of the State the feedlot operator shall submit an application for permit and upon plan approval obtain a permit from the Agency for the pollution control devices to be installed.

(4) Permits shall be issued at no charge to the feedlot operator. Each permit application shall include the following:

(a) A map or aerial photograph of the area showing all homes, buildings, lakes, ponds, watercourses, wetland, dry runs, rock out croppings, roads and applicable details and shall indicate the general topography with contours and drainage patterns. Wells should be indicated, a north arrow drawn and location insert map included.

KEY: RULES SECTION — Underlining indicates additions to proposed rule language. Strike outs indicate deletions from proposed rule language. PROPOSED RULES SECTION — Underlining indicates additions to existing rule language. Strike outs indicate deletions from existing rule language. If a proposed rule is totally new, it is designated "all new material."

(b) A description of geological conditions; soil types and ground water elevations; including high water table; to a depth of ten feet below the lowest elevation of the site.

(c) A plan indicating operational procedures; the location and specifications of proposed animal waste treatment works; land used for the disposal of animal wastes; and the quantity and type of effluent to be discharged from the site.

(6) Plans and specifications shall be approved and a permit issued when the director of the Agency determines they are in accordance with the requirements as set forth in these regulations and other applicable statutes; regulations; rules or criteria of the Agency relating to disposal of sewage; industrial; or other wastes. Although a permit shall be granted the same shall become effective only if the location of the site or facility shall conform to all applicable Federal; State and local laws; ordinances and regulations.

(7) Permits may be denied; conditioned; modified or revoked for violation of these regulations. When a permit is denied or revoked; the applicant or holder shall be notified in writing of the reasons therefor. A denial or revocation shall not become effective for at least 90 days after written notification to the applicant or holder. A denial or revocation shall be without prejudice to the applicant's or holders right to an appearance before the Agency within 90 days; or for filing a further application after revisions are made to meet objections specified as reasons for denial or revocation. The applicant or holder shall have the right to an appeal pursuant to Minnesota Statutes; Chapter 15.

SW 54 Location Requirements for Livestock Feedlots; Poultry Lots and Other Animal Lots

(1) All livestock feedlots; poultry lots and other animal lots shall be located so as not to constitute a potential pollution hazard to the land; air or waters of the State; except where corrective and protective measures approved by the Agency are taken.

(2) New livestock feedlots; poultry lots and other animal lots are prohibited within the following areas:

(a) Within shoreland

(b) Within a floodway

(c) Within 1,000 feet of the boundary of a public park

(d) In sinkholes or areas draining to sinkholes

(e) Within one half mile of the nearest point to a concentration of ten or more private residences at the time of construction.

SW 55 Nonconforming Feedlots

Modification of existing livestock feedlots; poultry lots and other animal lots to conform to the requirements of these regulations shall be accomplished. When the degree of necessary improvement is of such extent that immediate compliance cannot be accomplished; special consideration shall be given by the Agency. In such event; the owner of the nonconforming livestock feedlot; poultry lot or other animal lot shall; not later than six months after notification by certified mail that a permit will be required; submit to the Agency a report setting forth a program; plans and time schedule for compliance with these regulations. In any event; compliance must be achieved within such time as deemed reasonable by the Agency.

SW 56 Applicability; Definitions and General Conditions for Processing of Feedlot Permits; Severability and Variances.

APPLICABILITY

These are regulations and standards the provisions of which govern the processing of permits for Livestock Feedlots; Poultry Lots and Other Animal Lots by the MPCA and designated County officials under the supervision and review of the Minnesota Pollution Control Agency.

DEFINITIONS

(1) "Animal Unit" A unit of measure used to compare differences in the production of animal wastes which has as a standard the amount of waste produced on a regular basis by a slaughter steer or heifer. For purposes of these regulations, the following equivalents apply:

	Animal Units
(1) Slaughter steer or heifer	1
(1) Mature diary cow	1.4
(1) Swine over 55 pounds	.4
(1) Sheep	.1
(1) Turkey	.018
(1) Chicken	.01
(1) Duck	.2

(2) "Designated County Feedlot Pollution Control Officer" is a county employee or other person approved by the County Board, who should be knowledgeable in agriculture and who is designated by resolution of the County Board to receive and process feedlot; poultry lot and other animal lot permit applications.

(3) "Modified" Change in the operation of an animal feedlot which would affect the generation or disposal of animal waste.

(4) "Addendum" Document specifying additions to or change in conditions of a Livestock Feedlot, Poultry

~~Lot or Other Animal Lot permit due to the modification of said Livestock Feedlot, Poultry Lot or Other Animal Lot.~~

~~GENERAL CONDITIONS~~

~~All Livestock Feedlots, Poultry Lots and Other Animal Lots shall be located and operated in a manner that precludes potential pollution hazards to the land, air or waters of the state except where corrective and protective measures approved by the Agency are taken. These regulations outline how Agency approval of animal facilities shall be obtained in the form of a permit for existing and new operations.~~

~~SEVERABILITY~~

~~If any provision of these regulations or the application thereof to any person or circumstances is held to be invalid, such invalidity shall not affect other provisions or application of any other part of such regulations or any other regulations which can be given effect without the invalid provision of application, and to this end the provisions of all regulations and the various applications thereof are declared to be severable.~~

~~VARIANCES~~

~~Where upon written application of the responsible person or persons the Agency finds that by reason of exceptional circumstances strict conformity with any provisions of the regulation contained herein would cause undue hardship, would be unreasonable, impractical or not feasible under the circumstances, the Agency may permit a variance from these regulations upon such conditions and within such time limitations as it may prescribe for prevention, control or abatement of land, air or water pollution in harmony with the intent of the State and any applicable Federal laws.~~

~~SW 57 Processing of Animal Feedlot Permits by a County~~

~~(1) Pursuant to Minnesota Laws 1973, Chapter 573, Minnesota Counties may engage in the processing of animal feedlot permits. "Processing" may, at the option of the county board, include issuing, denying, modifying, imposing conditions upon, or revoking permits in accordance with these regulations.~~

~~(2) Any Minnesota county desiring to assume responsibility for processing animal feedlot permits must:~~

~~(a) Submit to the Pollution Control Agency a certified copy of a resolution adopted by the county board requesting permission to initiate an animal feedlot permit processing system in the county. Such resolution must be accompanied by a brief statement describing the manner in which the county will implement the permit processing procedures and indicating whether the county will issue, deny, modify conditions upon, or revoke permits under their processing plan.~~

~~(b) Receive written approval from the Minnesota Pollution Control Agency authorizing the processing of animal feedlot permits within the county.~~

~~(3) Each Minnesota county processing animal feedlot permits shall designate a county feedlot pollution control officer as having the primary responsibility for the feedlot permit program and charge him with the following duties:~~

~~(a) Distribute to applicants permit application forms made available through the Minnesota Pollution Control Agency;~~

~~(b) Provide, where requested, necessary assistance to applicants to insure that application forms are properly completed. (This includes, for example, the attachment of certain maps, plans, and specifications required under SW 53.)~~

~~(c) Following receipt and examination of completed application forms, indicate in writing, to the Minnesota Pollution Control Agency, whether or not the proposed animal feedlot facility will comply with all applicable state and local laws and regulations.~~

~~(d) Indicate where it is determined that a proposed facility will not, as planned, meet the requirements of state and local law, those respects in which a variance would be required for issuance of a permit. A determination of non-compliance may include a variance request with a written recommendation for or against the variance. Where the recommendation supports a variance, the county official must indicate what pollution control devices have been proposed and enclose plans or design specification with the application.~~

~~SW 58 Issuance, Modification, or Imposition of Conditions upon Permits by Counties.~~

~~(1) Those counties desiring to do so, may pursuant to their approved permit processing plan, issue, modify, or impose conditions upon animal feedlot permits. For purposes of this regulation, "issuance of an animal feedlot permit" means delivery and cosigning of an animal feedlot permit approved by the Pollution Control Agency or the grant-~~

KEY: RULES SECTION — Underlining indicates additions to proposed rule language. ~~Strike outs~~ indicate deletions from proposed rule language. PROPOSED RULES SECTION — Underlining indicates additions to existing rule language. ~~Strike outs~~ indicate deletions from existing rule language. If a proposed rule is totally new, it is designated "all new material."

ing of a permit by a county board where the Pollution Control Agency has not acted on a permit application within 15 days of notification of intent to issue a permit by a designated county official.

(2) A permit shall be required for all livestock feedlots, poultry lots and other animal lots which, after April 16, 1971:

(a) Began operation;

(b) Expanded existing operation by increasing the number of animal units;

(c) Modified existing operation or constructed new facilities, (but did not increase animal units)

(d) Changed ownership. (but did not increase animal units)

The location requirements of SW 54 (2) do not apply to permits issued under (c) and (d) above.

(3) If the county determines that any livestock feedlot, poultry lot or other animal lots, whether or not it existed prior to April 16, 1971 is in fact polluting or constitutes a potential pollution hazard to the land, air or waters of the state, the Agency shall be notified and the county may require the feedlot operator to submit an application for a permit containing plans for pollution abatement. Where the county has notified the Agency of a potential pollution hazard, it shall also notify the Agency as to whether or not the operator has been informed of the requirement for a feedlot permit and pollution control plans under SW 53.

(4) All permit applications shall include the following:

(a) A completed permit application form; (the permit application should be for the maximum number of animals the operator has facilities provided for)

(b) A map or aerial photograph of the area showing all homes, wells, building, lakes, ponds, watercourses, wetland, dry runs, rock out croppings, roads and applicable details and shall indicate the general topography with contours and drainage patterns. A north arrow shall be drawn on, the scale shown, and a location insert map be included;

(c) A plan indicating operational procedures, the location and specifications of animal waste collections, storage and/or treatment facilities, land used for the disposal of animal wastes, and the quantity and type of waste to be removed from the site.

(5) In order for the county to issue a permit:

(a) The Minnesota Pollution Control Agency must receive written notification of the intention of the county to issue a permit. Such notification must include the completed permit application together with all applicable details as described in section 4 above;

(b) The Agency shall within 15 days after receipt of written notification of intent to issue a permit review the permit and suspend, modify, disapprove or approve the issuance of said permit. If the Agency fails to act within 15 days the county board may take action which shall be final, subject to appeal to the district court.

(c) Upon Agency approval of the permit, the permit and display certificate shall be returned to the county for issuance to the operator.

(6) In order for a county to modify or impose conditions upon a permit:

(a) The county shall notify the Minnesota Pollution Control Agency in writing of its intention to modify or impose conditions upon an animal feedlot permit.

(b) A copy of the permit together with the intended modifications and conditions shall be forwarded to the Agency for review. The Agency shall either approve or reject the recommended modifications or conditions. The Agency may also suggest alternative modifications or conditions.

(c) The county must receive Minnesota Pollution Control Agency approval of the proposed modifications or conditions.

SW 59 Revocation of Permits by Counties

(1) Those counties desiring to do so, may, pursuant to their permit processing authority revoke animal feedlot permits.

(2) In order for a county to revoke a permit:

(a) A copy of the permit application or permit together with a written justification for revocation must be submitted to the Pollution Control Agency for review. The Agency shall approve or reverse the revocation.

(b) The county must receive written approval of the permit revocation from the Pollution Control Agency.

(c) Where a revocation has been approved by the Pollution Control Agency, the applicant must be informed in writing by the county of the reasons for denial or revocation.

(d) A revocation of a permit by a county shall be without prejudice to the applicant's right to an appearance

before the Pollution Control Agency within 90 days; or for filing a further or new application with the county after revisions are made to meet objections specified as reasons for revocation.

SW 60 Denial of Permits by Counties

(1) In the case of permit denial by a county official the applicant shall be informed in writing

(a) of the reasons for denial;

(b) that if the applicant feels the permit denial is unreasonable, an informal appeal may be made to the Division of Solid Waste;

(c) that denial shall be without prejudice to the applicant's right to an appearance before the Agency within 90 days; or for filing a further application after revisions are made to meet objections specified as reasons for denial. The applicant shall have the right to an appeal pursuant to Minnesota Statutes, Chapter 15.

SW 61 Required Records

(1) The county shall maintain on file a copy of all correspondence and material relating to feedlot permits processed by the county. A copy of the permit and the permit application shall be included. The original permit application shall be on file with the Agency.

(2) Prior to any major change in a feedlot operation an addendum to the original permit shall be applied for describing the change, and when approval given, the addendum shall then be filed with the original permit.

(3) When the ownership and/or management of a permitted operation is changed, the county and state records will be changed upon notification. The new operator will be subject to the conditions of the existing permit unless an approved addendum is added to the permit.

SUPREME COURT

Decisions Filed Friday, March 2, 1979

Compiled by John McCarthy, Clerk

47428 Elmer Kadolph vs. Koob Implement Company, et al, Relators, Workers' Compensation Court of Appeals.

Before a case is ripe for appeal from the Workers' Compensation Court of Appeals to this court, the Workers' Compensation Court of Appeals should decide all issues presented to it, including the issue whether an employer is justified in terminating permanent and total disability benefits.

For purposes of deciding whether to impose a penalty, greater weight is to be given to the determination whether there is merit to relators' petition to vacate the original award than to the determination whether relators followed the correct procedure to vacate or modify that award.

Reversed and remanded. Yetka, J.

48648/15 Stanley Kossak, Appellant, vs. Charles M. Stalling and the City of Duluth, St. Louis County.

Where the municipality had actual notice of an accident between a vehicle it owned and one owned by plaintiff, we find that there was substantial compliance with the notice requirement of Minn. St. 1971, § 466.05, and we therefore need not reach the issue of the statute's constitutionality.

Consistent with the enlightened trend of authority we hold that where plaintiff is involved in an accident with a municipal vehicle and the municipality has actual notice, the 1-year commencement of suit requirement contained in Minn. St. 1971, § 466.05, is invalid as a denial of equal protection of the laws.

Reversed and remanded. Scott, J. Took no part, Todd, J.

48945/40 Anne M. Scheeler, Widow of Henry F. Scheeler, Deceased, Relator, vs. North Pipe Electric Cooperative, Inc., et al, and Blue Cross & Blue Shield of Minnesota, intervenor, Workers' Compensation Court of Appeals.

STATE OF MINNESOTA

OFFICE OF THE ATTORNEY GENERAL

ADDRESS REPLY TO:
OFFICE OF THE ATTORNEY GENERAL
MINNESOTA POLLUTION CONTROL AGENCY
1935 W. COUNTY ROAD B2
ROSEVILLE, MINNESOTA 55113
(612) 296-7342

October 11, 1979

Mr. Lee Sheehy
Special Assistant Attorney General
G-25 Administration Building
50 Sherburne Avenue
St. Paul, Minnesota 55155

In the Matter of the Proposed Adoption of 6 MCAR §§4.8051-4.8052 Constituting Rules for the Control of Pollution from Animal Feedlots and the Repeal

Dear Mr. Sheehy:

In accordance with the rulemaking procedure set out in Minn. Stat. §15.0413(4), I am now submitting for your review the above-entitled rule. I am filing with your office a copy of the hearing record and the following documents:

a) Four copies of the Rule as Adopted

b) An original and four copies of the Order Adopting Rules

c) Three copies of the Rule as Proposed

d) Three copies of the Agency's Certificate of Adoption of Rules Resolution

e) Three copies of Agency's Adopted Findings of Fact and Conclusions

f) Three copies of the Hearing Examiner's Report

g) Three copies of the Chief Hearing Examiner's Report

h) Three copies of Agency's Authorizing Resolution

i) Three copies of Order for Hearing

j) Three copies of Notice of Hearing

k) Three copies of Affidavit of Acquisition of Secretary of State's Mailing List

l) Three copies of Secretary of State's List and Certificate of Delivery

m) Three copies of Affidavit of Mailing

n) Three copies of Statement of Need and Reasonableness

o) Three copies of the Notice of Intent to Solicit Outside Opinion

p) Statement of Compliance with the Attorney General's Rulemaking Procedure

Please contact me if you need any additional information for your review of this rule. Thank you for your assistance.

Sincerely,

Robert C. Moilanen
Special Assistant
Attorney General

Enclosures

RCM:ds

Defective

CERTIFICATE OF BOARD'S AUTHORIZING RESOLUTION

I, Terry Hoffman, do certify that I am the Executive Director of the Minnesota Pollution Control Agency, an Agency duly authorized under the laws of the State of Minnesota; and that a resolution was adopted at the meeting of the Agency properly called on the 27th day of February, 1979; and that a quorum was present at said meeting; and that the resolution is set forth in the minutes of said meeting and has not been rescinded or modified; and that the resolution authorized a public hearing for the purpose of adopting MCAR 4.8051-4.8052 constituting rules for the control of pollution from animal feedlots and the repeal of Minn. Rules SW 51-61.

IN WITNESS WHEREOF, I have hereunto subscribed my name this 27 day of February, 1979.

Terry Hoffman
Executive Director

Subscribed and sworn to before me
this 27th day of February, 1979.

Mary E. Wyatt
Notary Public

MARY E. WYATT
NOTARY PUBLIC-MINNESOTA
RAMSEY COUNTY
My Comm. Expires Oct. 24, 1993

STATE OF MINNESOTA

COUNTY OF RAMSEY

MINNESOTA POLLUTION CONTROL AGENCY

In the Matter of the Proposed Adoption of MCAR 4.8051-4.8052 Constituting Rules for the Control of Pollution from Animal Feedlots and the Repeal of Minn. Rules SW 51-61

ORDER FOR HEARING

IT IS HEREBY ORDERED that public hearings on the above-captioned rules be held in the following locations on the following dates and times:

April 12, 1979, Thursday, Board Room of the Minnesota Pollution Control Agency, 1935 West County Road B-2, Roseville, Minnesota, convening at 10:00 a.m.

April 16, 1979, Monday, Basement Conference Room of the Minnesota Department of Transportation, 1010-21st Avenue Northwest, Industrial Park, Owatonna, Minnesota, convening at 1:00 p.m. and reconvening at 7:00 p.m.

April 17, 1979, Tuesday, Room 234 C.A.B., Southwest State University, Marshall, Minnesota, convening at 1:00 p.m. and reconvening at 7:00 p.m.

April 18, 1979, Wednesday, Commissioners Room at Becker County Courthouse, Lake Street, Detroit Lakes, Minnesota, convening at 1:00 p.m. and reconvening at 7:00 p.m.

April 19, 1979, Thursday, Meeting Room at Crow Wing County Courthouse Annex, East Laurel Street, Brainerd, Minnesota, convening at 1:00 p.m. and reconvening at 7:00 p.m.

These hearings shall continue until all persons have had an opportunity to be heard.

IT IS FURTHER ORDERED that a Notice of Hearing be mailed to all persons or representatives of associations or other interested groups who have registered their names with the Secretary of State for that purpose.

IT IS FURTHER ORDERED that the Notice of Hearing be published in the State Register.

Terry Hoffman
Executive Director

Dated: 2-27-79

STATE OF MINNESOTA

COUNTY OF RAMSEY

MINNESOTA POLLUTION

CONTROL AGENCY

In the Matter of the Proposed Adoption of MCAR 4.8051-4.8052 Constituting Rules for the Control of Pollution from Animal Feedlots and the Repeal of Minn. Rules SW 51-61

AFFIDAVIT OF MAILING

STATE OF MINNESOTA)
) ss.
COUNTY OF RAMSEY)

Karen M. Leguil, being first duly sworn, hereby deposes and says that in the City of Roseville, county and state aforesaid, on the 9 day of March, 1979, she served the foregoing Notice of Hearing by depositing in the United States mail at said City of Roseville, true and correct copies thereof, properly enveloped, with postage prepaid, and addressed to those named on the attached mailing lists, including the Secretary of State's list.

Karen Leguil
Karen M. Leguil

Subscribed and sworn to before me this 9th day of March, 1979:

Susan M. Pauus
Notary Public

SUSAN M. PAUS
NOTARY PUBLIC-MINNESOTA
HENNEPIN COUNTY
My Comm. Expires Dec. 3, 1982

K

STATE OF MINNESOTA

COUNTY OF RAMSEY

MINNESOTA POLLUTION

CONTROL AGENCY

In the Matter of the Proposed Adoption of MCAR 4.8051-4.8052 Constituting Rules for the Control of Pollution from Animal Feedlots and the Repeal of Minn. Rules SW 51-61

AFFIDAVIT OF RECEIPT OF SECRETARY OF STATE'S LIST

STATE OF MINNESOTA)
) ss.
COUNTY OF RAMSEY)

Kenneth R. Brisco, being duly sworn on oath deposes and says:

1. That he is an employee of the Division of Administrative Services, Minnesota Pollution Control Agency, State of Minnesota.

2. That on the 6th day of March, 1979, he went to the Secretary of State's office for the State of Minnesota and requested a current list of all representatives of associations or other interested groups or persons who had registered their names with the Secretary of State for the purpose of obtaining notices of public hearings relating to the promulgation of rules pursuant to Minn. Stat. §15.0412.

3. That on the 6th day of March, 1979, in response to the above request, the Secretary of State provided him with such a list, a copy of which is attached hereto and incorporated by reference.

FURTHER AFFIANT SAYETH NOT.

Kenneth R. Brisco

Kenneth R. Brisco

Subscribed and sworn to before me this 7th day of March, 1979:

Lila Holmdahl

Notary Public

LILA HOLMDAHL
NOTARY PUBLIC - MINNESOTA
HENNEPIN COUNTY
My Commission Expires Nov. 1, 1983

CERTIFICATE OF BOARD'S
ADOPTION OF RULES RESOLUTION

I, Terry Hoffman, do certify that I am the Executive Director of the Minnesota Pollution Control Agency, an Agency duly authorized under the laws of the State of Minnesota, and that a resolution was adopted at the meeting of the Agency properly called on the 25th day of September, 1979; that a quorum was present at said meeting; that the resolution that was passed was stated orally as follows:

BE IT RESOLVED, that the Minnesota Pollution Control Agency adopts the Minnesota Pollution Control Agency Staff's proposed Findings of Fact, Conclusions and Order Adopting Rules concerning the proposed adoption of 6 MCAR §§4.8051-4.8052, constituting rules for the control of pollution from animal feedlots and the repeal of Minn. Rules SW 51-61.

BE IT FURTHER RESOLVED, that the Chairman and Executive Director are hereby authorized to execute the Findings of Fact and Conclusions and the Order Adopting Rules on behalf of the Agency.

IN WITNESS WHEREOF, I have hereunto subscribed my name this ____ day of October, 1979.

Terry Hoffman
Executive Director

Subscribed & Sworn to before me this 11th day of October, 1979.

Elizabeth C McLeod
Notary Public

ELISABETH C. McLEOD
NOTARY PUBLIC—MINNESOTA
RAMSEY COUNTY
My Commission Expires Nov. 24, 1983

Working copy

STATE OF MINNESOTA

COUNTY OF RAMSEY

MINNESOTA POLLUTION CONTROL AGENCY

In the Matter of the Proposed Adoption of 6 MCAR §§4.8051-4.8052 Constituting Rules for the Control of Pollution from Animal Feedlots and the Repeal of Minn. Rules SW 51-61

No. PCA-79-004-HK

ORDER ADOPTING RULES

The above-entitled matter came duly on for hearing before Howard Kaibel, Jr., Hearing Examiner, on the 12th day of April, 1979, at the Board Room of the Minnesota Pollution Control Agency, 1935 West County Road B-2, Roseville, Minnesota, commencing at 10:00 a.m. Said hearing was duly recessed and reconvened at the following times and locations: Basement Conference Room of the Minnesota Department of Transportation, 1010-21st Avenue Northwest, Industrial Park, Owatonna, Minnesota, on April 16, 1979, commencing at 1:00 p.m. and 7:00 p.m.; Room 234 C.A.B., Southwest State University, Marshall, Minnesota, on April 17, 1979, commencing at 1:00 p.m. and 7:00 p.m.; Commissioners Room at Becker County Courthouse, Lake Street, Detroit Lakes, Minnesota, on April 18, 1979, commencing at 1:00 p.m. and 7:00 p.m.; Meeting Room at Crow Wing County Courthouse Annex, East Laurel Street, Brainerd, Minnesota, commencing at 1:00 p.m. and 7:00 p.m.

After affording interested parties an opportunity to present written and oral data, statements and arguments, having considered all the evidence adduced and upon the records, files and proceedings herein, and applicable standards or criteria, and having confirmed the need for the above-captioned rules,

NOW, THEREFORE, IT IS ORDERED THAT, pursuant to authority vested in this Agency by Minn. Stat. §§115.03, 116.07, subd. 4, and 116.07, subd. 7 (1978), the rules identified as 6 MCAR §§4.8051 - 4.8052 constituting rules for the control of pollution from animal feedlots and the repeal of Minn. Rules SW 51 - 61 are adopted this 25th day of September, 1979, as published in the State Register on March 12, 1979, with the additions and deletions which are attached to this Order.

MINNESOTA POLLUTION CONTROL AGENCY

Art Engelbrecht, Vice Chairman

Terry Hoffman, Executive Director

Dated: August 28, 1979

MINNESOTA POLLUTION CONTROL AGENCY'S
Rules for the Control of Pollution from Animal Feedlots

Preamble

An adequate supply of healthy livestock, poultry, and other animals is essential to the well-being of Minnesota citizens and the nation. These domesticated animals provide our daily source of meat, milk, eggs, and fiber. Their efficient, economic production must be the concern of all consumers if we are to have a continued abundance of high-quality, wholesome food and fiber at reasonable prices.

However, livestock, poultry, and other animals produce manure which may, when improperly stored, transported, or disposed, negatively affect Minnesota's environment. When animal manure adds to air, water, or land pollution in the State of Minnesota, it must be controlled.

The following rules for the control of livestock, poultry, and other animal ~~wastes~~ manures have been promulgated to provide protection against pollution caused by manure from domesticated animals. However, these rules recognize that animal manure often provides beneficial qualities to the soil and to the production of agricultural crops.

These rules provide for a cooperative program between counties and the Minnesota Pollution Control Agency (hereinafter Agency). County programs, in many instances, represent considerable experience and sensitivity to local agricultural practices and to successful soil and water conservation. Pollution control measures, where deemed necessary by the Agency,

should be individually designed and developed to provide the site specific controls needed for the operation in question. Therefore, a joint county-state program is desirable because it will insure local involvement, minimal disruption to agricultural operations and protect the environment from further degradation.

These rules comply with the policy and purpose of the State of Minnesota in regard to the control of pollution as set forth in Minn. Stat. chs. 115 and 116 (1978). Specifically, these rules are promulgated in accordance with Minn. Stat. §116.07 (1978) and Minn. Stat. §115.03 (1978). Finally, these rules shall have the force and effect of law and shall supersede and replace Minn. Rules SW 51-55 (1971) and Minn. Rules SW 56-61 (1974) ~~upon filing with the Secretary of State~~ twenty days after its publication in the State Register.

In repealing the old rules, controlling pollution from animal feedlots, specifically Minn. Rule 54 containing certain location requirements, the Agency will look to local units of government to provide adequate land use planning for residential and agricultural areas. It has been the Agency's experience that residential and agricultural uses of land are often incompatible and that the best forum for resolving the conflicting use of land is at the local level. However, in promulgating these rules the Agency does not seek to abdicate its mandate to protect the purity of the natural resources of the State of Minnesota.

6 MCAR §4.8051 Rules for the Control of Pollution from Animal Feedlots

A. General Applicability. The provisions of these rules govern the storage, transportation, disposal, and utilization of animal manure and the application for and issuance of permits and certificates of compliance for construction and operation of animal manure management and disposal or utilization systems for the protection of the environment.

B. Definitions. All terms employed in these animal feedlot rules for which definitions are given in Minn. Stat. §§115.07 and 116.06 (1978), shall have the meaning ascribed to them therein. The terms specified below shall have the meanings ascribed to them:

1. "Agency." The Minnesota Pollution Control Agency as established in Minn. Stat. ch. 116 (1978).

2. "Animal Feedlot." A lot or building or combination of lots and buildings intended for the confined feeding, breeding, raising or holding of animals and specifically designed as a confinement area in which manure may accumulate, or where the concentration of animals is such that a vegetative cover cannot be maintained within the enclosure. For purposes of these rules, open lots used for the feeding and rearing of poultry (poultry ranges) shall be considered to be animal feedlots. Pastures shall not be considered animal feedlots under these rules.

3. "Animal Manure." Poultry, livestock or other animal excreta or a mixture of excreta with feed, bedding or other materials.

4. "Animal Unit." A unit of measure used to compare differences in the production of animal manures that employs as a standard the amount of manure produced on a regular basis by a slaughter steer or heifer. For purposes of this rule, the following equivalents shall apply:

Animal	Unit
one mature dairy cow	1.4 animal unit
one slaughter steer or heifer	1.0 animal unit
one horse	1.0 animal unit
one swine over 55 pounds	.4 animal unit
one duck	.2 animal unit
one sheep	.1 animal unit
one swine under 55 pounds	.05 animal unit
one turkey	.018 animal unit
one chicken	.01 animal unit

For animals not listed above, the ~~equivalent~~ number of animal units shall be defined as the average weight of the animal divided by 1,000 lbs.

5. "~~Certification~~ Certificate of Compliance." A letter from the ~~Agency~~ Director or the county feedlot pollution control officer to the owner of an animal feedlot stating that the feedlot meets Agency requirements.

6. "Change in Operation." An increase ~~in~~ beyond the permitted maximum number of animal units ~~which can be confined at the site~~, an increase in the number of animal units which are confined at an unpermitted animal feedlot requiring a construction

investment, or a change in the construction or operation of an animal feedlot that would affect the storage, handling, utilization, or disposal of animal manure.

7. "Corrective or Protective Measures." A practice, structure, condition, or combination thereof which prevents or reduces the discharge of pollutants from an animal ~~facility~~ feedlot to a level in conformity with Agency rules.

8. "County Feedlot Pollution Control Officer." A county employee or officer who is knowledgeable in agriculture and who is designated by the county board to receive and process animal feedlot permit applications.

9. "Director." The Executive Director of the Minnesota Pollution Control Agency whose duties are defined in Minn. Stat. §116.03 (1978).

10. "Domestic Fertilizer."

a. Animal manure that is put on or injected into the soil to improve the quality or quantity of plant growth, or

b. Animal manure that is used as compost, soil conditioners, or specialized plant beds.

11. ~~"Flood Plain."~~ "Floodplain." The areas adjoining a watercourse which have been or hereafter may be covered by a large flood known to have occurred generally in Minnesota and reasonably characteristic of what can be expected to occur on an average frequency in the magnitude of the 100 year recurrence interval.

12. "Interim Permit." A permit issued by the ~~Executive~~ Director ~~of the Agency~~ or the county feedlot pollution control officer which expires no longer than ~~six~~ ten months from the date of issue.

13. "Manure Storage Area." An area associated with an animal feedlot where animal manure or runoff containing animal manure is stored until it can be utilized as domestic fertilizer or removed to a permitted animal manure disposal site. Animal manure packs or mounding within the animal feedlot shall not be considered to be manure storage for these regulations.

14. "New Animal Feedlot." An animal feedlot constructed and operated at a site where no animal feedlot existed previously or where ~~an~~ a pre-existing animal feedlot has been abandoned or unused for a period of five years or more.

15. "National Pollutant Discharge Elimination System (NPDES) Permit." A permit issued by the Agency for the purpose of regulating the discharge of pollutants from point sources including concentrated animal feeding operations.

16. "Owner." ~~A~~ All persons having possession, control, or title to ~~one or more~~ an animal feedlot~~s~~.

17. "Pastures." Areas where grass or other growing plants are used for grazing and where the concentration of animals is such that a vegetation cover is maintained during the growing season except in the immediate vicinity of temporary supplemental feeding or watering devices.

18. "Permit." A document issued by the Agency, at no charge to the applicant, which contains requirements, conditions and compliance schedules relating to the discharge of animal manure pollutants.

19. "Potential Pollution Hazard." A condition which indicates a potential for pollution of the land or waters of the state including:

a. An animal feedlot or manure storage area whose boundaries are located within ~~designated~~ shoreland or ~~flood plain~~ floodplain, or are located in an area draining directly to ~~either~~ a sinkhole or draining to an area with shallow soils overlying a fractured or cavernous rock, or are located within 100 feet of a water well, or

b. An animal feedlot or manure storage area whose construction or operation will allow a discharge of pollutants to surface waters of the state in excess of applicable standards (including, but not limited, to Minnesota Rules WPC 14, 15, 24, and 25) during a rainstorm event of less magnitude than the 25 year - 24 hour event, or will allow uncontrolled seepage of pollutants into the ground water, or will violate any applicable state rules ~~and regulations~~.

20. "Shoreland." Land located within the following distances from the ordinary high water elevation of public waters:

a. Land within 1,000 feet from the normal high watermark of a lake, pond or flowage, and

b. Land within 300 feet of a river or stream or the landward side of ~~flood plain~~ floodplain delineated by ordinance on such a river or stream, whichever is greater.

21. "Sinkhole." A surface depression which is connected to a cavernous bedrock (generally limestone) by a channel or collapse of the overlying formation.

C. Animal Feedlot Pollution Control Requirements.

1. No animal feedlot or manure storage area shall be constructed, located ~~and~~ or operated so as to create or maintain a potential pollution hazard unless a certificate of compliance or an Agency permit has been issued.

2. All vehicles used to transport animal manure on county, state and interstate highways or through municipalities shall be leakproof. Manure spreaders with endgates shall be in compliance with this provision provided the endgate works effectively to restrict leakage and the manure spreader is leakproof. This shall not apply to animal manure being hauled to fields adjacent to feedlot operations or fields divided by roadways provided the animal manure is for use as domestic fertilizer.

3. Animal manure~~s~~, when utilized as domestic fertilizer, shall not be stored for longer than one year and shall be applied at rates not exceeding local agricultural crop nutrient requirements except where allowed by permit. Local agricultural crop nutrient requirements can be obtained at local Soil Conservation Service Offices or local Agricultural Extension Service Offices.

4. Any animal manure not utilized as domestic fertilizer shall be treated or disposed of in accordance with applicable state rules and regulations.

5. The owner of any animal feedlot shall be responsible for the storage, transportation and disposal of all animal manure generated in a manner consistent with the provisions herein.

D. Animal Feedlot Permitting Procedure.

1. Animal feedlot permit application requirements.

a. The owner of a proposed or existing animal ~~facility~~ feedlot for greater than 10 animal units shall ~~be required to~~ make application to the Director for a permit when any of the following conditions exist:

(1) A new animal feedlot is proposed; or

(2) A change in operation of an existing animal feedlot is proposed; or

(3) Ownership of an existing animal feedlot is changed; or

~~(4) An inspection by the Agency staff or a county feedlot pollution control officer determines that an existing animal feedlot creates or maintains a potential pollution hazard; or~~

~~(5)~~ (4) A National Pollutant Discharge Elimination System (NPDES) permit application is required under state or federal rules and regulations.

b. The owner of any animal feedlot shall be required to make an application for a permit when an inspection by

the Agency staff or a county feedlot pollution control officer determines that the animal feedlot creates or maintains a potential pollution hazard.

~~b.~~ c. The permit application shall include the following items:

(1) A completed permit application form~~,~~ listing all owners and signed by ~~the~~ at least one of the owners~~,~~ ~~which includes~~ including animal types, the maximum number of animals of each type which can be confined at the animal feedlot, the location of ~~facilities~~ the animal feedlot, soil conditions, and hydrogeological conditions.

(2) A map or aerial photograph showing the location of all wells, buildings, lakes, and watercourses within 1,000 feet of the proposed feedlot.

(3) A manure management plan including manure handling and application techniques, acreage available for manure application and plans for any proposed manure storage structure. Any plans for manure storage structures of 500,000 gallons capacity or larger shall have been prepared or approved by a registered professional engineer or a ~~qualified governmental employee.~~ soil conservation service employee.

(4) Such additional information relating to the specific site or the specific feedlot operation as may be requested by the Director to evaluate compliance with federal and state rules and regulations.

d. When more than one person is in possession, control or has title to a single animal feedlot, only one person needs to apply for an animal feedlot permit, however, the permit application must list all owners in accordance with 6 MCAR §4.8051 D.1.b.(1). All owners are responsible for compliance with these rules and permits or certificates of compliance issued pursuant to these rules.

2. The animal feedlot permit application shall be reviewed by the county feedlot pollution control officer or by the Director if a county permit processing program has not been implemented in the county where the animal feedlot will be located.

a. No permit shall be required when the review of the application indicates that all animal manures are being used as domestic fertilizer and that a potential pollution hazard does not exist or that potential pollution hazards have been satisfactorily addressed by corrective or protective measures. However, a certificate of compliance shall be obtained by the owner of such ~~a facility~~ an animal feedlot prior to commencing operation of the new feedlot ~~or~~, changing the operation of an existing feedlot or changing ownership of an existing feedlot.

b. The Agency shall consider the issuance of a permit when the review indicates that a potential pollution hazard exists and has not been addressed by corrective or protective measures or when manure is not being used as a domestic fertilizer.

(1) An interim permit shall be issued by the Director when the potential pollution hazard will be corrected within ~~six~~ ten months of the date of ~~application.~~ permit issuance. When all necessary corrective and protective measures have been installed on a permitted animal feedlot, ~~the Director shall terminate~~ the permit shall terminate and ~~shall issue~~ a ~~certification~~ certificate of compliance shall be issued.

(2) An animal feedlot permit may be issued by the Agency when the potential pollution hazard will not be corrected within ~~six~~ ten months of the date of ~~application~~ permit issuance or when manure is not used as a domestic fertilizer. This permit shall contain such conditions and requirements as the Agency deems necessary in order to insure compliance with applicable state rules and regulations.

(3) If it is determined during the review process that an animal feedlot must obtain a National Pollutant Discharge Elimination System (NPDES) permit, the applicant shall be notified and a permit shall be processed and issued as prescribed in Minn. Rule WPC 36 (1974).

E. Existing Permits for the Construction and Operation of Livestock Feedlots, Poultry Feedlots and Other Animal Lots. The conditions and provisions of all Agency animal feedlot permits issued under Minn. Rules SW 51-61 before the effective date of these rules shall continue to be in effect. Upon application for

a change in operation or change of ownership of an existing, permitted animal feedlot, the permit shall be reconsidered pursuant to these rules.

F. Procedural Rules and Appeals. All requests for hearings, appeals and other procedural matters not specifically provided for herein shall be governed by the Agency Rules of Procedure, the Rules of the Office of Hearing Examiners and other applicable ~~laws~~ statutes and rules.

Where OK See Findings #8

G. Severability. If any provision of this rule or the application thereof to any person or circumstances is held to be invalid, such invalidity shall not affect other provisions of this rule or application of any other part of this rule which can be given effect without application of the invalid provision. To this end the provisions of all sections, subsections and subdivisions herein and the various applications thereof are declared to be severable.

H. Variance from Rules. Any person may apply for a variance from any requirements of this rule. Such variances shall be applied for and acted upon by the Agency in accordance with Minn. Stat. §116.07 subd. 5 (1978) and other applicable statutes and rules.

6 MCAR §4.8052 Rules for the Processing of Animal Feedlot Permit Applications by Counties.

A. General Applicability. Any Minnesota county board may, by resolution, assume responsibility for processing applications

for animal feedlot permits as authorized by Minn. Stat. §116.07 subd. 7 (1978). The provisions of these rules shall govern the exercise of approval and supervising authority by the Agency with respect to the processing of animal feedlot permit applications by a county.

B. County Processing Procedure for Animal Feedlot Permit Applications.

1. Any Minnesota county board desiring to assume responsibility for processing animal feedlot permit applications shall:

a. Submit to the Director a resolution duly adopted by the county board requesting permission to process animal feedlot permit applications in the county. Such resolution shall be accompanied by a statement describing the permit application processing procedure to be used by the county.

b. Receive written approval from the Agency authorizing the processing of animal feedlot permit applications within the county.

c. Designate a county feedlot pollution control officer as having the primary responsibility for the animal feedlot permit program and charge him with the following duties:

(1) ~~Distribution of~~ Distribute permit application forms made available by the Director to those required to make application for the permit.

(2) Provide, where requested, assistance to applicants to insure that application forms are properly completed.

(3) Receive and review completed application forms and conduct such inspections as necessary to determine if the proposed animal ~~facility~~ feedlot will comply with applicable state rules and regulations and applicable local ordinances.

(4) Maintain a record of all correspondence and material relating to animal feedlot applications, ~~certifications~~ certificates of compliance, and interim permits issued by the county ~~board~~.

2. The processing of applications for animal feedlot permits by a county board, as defined in Minnesota Statutes §116.07 subd. 7(a), (b), and (c) (1978), shall be accomplished according to the following procedure:

a. For animal feedlots with less than 1,000 animal units where manure is used as a domestic fertilizer and with no potential pollution hazard, the county feedlot pollution control officer shall ~~certify~~ provide a certificate of compliance to the Agency and the applicant stating that the animal feedlots comply with all aspects of 6 MCAR §4.8051 and that no animal feedlot permit is required.

b. For animal feedlots of less than 300 animal units where manure is used as a domestic fertilizer and where all potential pollution hazards have been mitigated by protective or corrective measures the county feedlot pollution control officer shall ~~certify~~ provide a certificate of compliance to the Agency and to the applicant stating that the animal feedlots comply with 6 MCAR §4.8051 and that no animal feedlot permit is required.

c. The county feedlot pollution control officer shall forward to the Director, with recommendations and comments, all animal feedlot permit applications which fall within the following categories:

(1) Animal feedlots of 1,000 animal units or more; or

(2) Animal feedlots of more than 300 animal units where a potential pollution hazard has been mitigated through corrective or protective measures; or

(3) Animal feedlots with a potential pollution hazard which has not been mitigated by corrective or protective measures; or

(4) Animal feedlots where manure is not used as domestic fertilizer; or

(5) Animal feedlots for which further technical review is desired by the county feedlot pollution control officer.

3. Any county board which has assumed responsibility for processing feedlot permit applications in accordance with 6 MCAR §4.8052 B.1., may issue, deny, modify, impose conditions upon or revoke interim permits for animal feedlots smaller than 300 animal units where animal manure is used as a domestic fertilizer and with a potential pollution hazard which will be mitigated by corrective or protective measures within ~~six~~ ten months of the date of the issuance of the interim animal feedlot permit ~~application~~.

These permits shall be issued, denied, modified, have conditions imposed upon them or revoked in conformance with the following requirements:

a. In order for the county to issue an interim permit:

(1) The Director must receive written notification of the intention of the county to issue an interim permit. Such notification must include the completed permit application, a copy of the draft interim permit proposed for issuance by the county and documentation concerning the potential pollution hazard and the corrective or protective measures to be taken by the owner;

(2) The Director shall, after receipt of written notification of intent to issue an interim permit, review the draft interim permit within 15 days to determine compliance with applicable Agency rules and shall approve, suspend, modify, or reverse the issuance of the interim permit. If the Director approves issuance of the interim permit, the interim permit and a certificate for display shall be returned to the county for issuance to the operator. If the Director suspends, modifies or reverses the issuance of the interim permit, the applicant retains all rights of appeal set out in 6 MCAR §4.8052 C. If the Director fails to act within 15 days after receipt of the draft interim permit from the county, the county may proceed to issue the interim permit.

b. In order for a county to modify or impose conditions upon a interim permit the county shall notify the Director

in writing of its intention to modify or impose conditions upon an interim animal feedlot permit. Such notification must include a copy of the interim permit together with the intended modifications and conditions. The Director shall determine compliance with the provisions of applicable Agency rules and shall either approve, suspend, further modify or reverse the recommended modification or conditions within 15 days of receipt of the aforementioned notice of intent. The county shall be notified of said Agency action. The applicant retains all rights of appeal set out in 6 MCAR §4.8052 C. ~~If the Director fails to act within 15 days after the receipt of the draft interim permit from the county, the county may proceed to issue the interim permit.~~

~~(3) If the county has issued an interim permit, the county feedlot pollution control officer shall terminate the permit and issue a certificate of compliance when all necessary corrective and protective measures have been installed.~~

c. In order for a county to revoke an interim permit a copy of the interim permit together with a written justification for revocation must be submitted to the Director for review. The Director shall, after receipt of the justification for revocation by the county, review the matter within 15 days to determine compliance with the provisions of applicable Agency rules. The county must receive written approval of the interim permit revocation from the Agency prior to taking action. Where a revocation has been approved by the Agency, the applicant must be

informed in writing by the county of the reasons for revocation and the applicant shall retain all rights of appeal set out in 6 MCAR §4.8052 C.

d. In the case of a denial of an interim permit application by the county board, the applicant shall be informed by the county in writing of the reasons for denial and shall be informed of applicable appeal procedures. The applicant shall retain all rights of fundamental fairness afforded by law and the applicant may make an appeal to the Agency to review the county's action. Such a denial by a county shall be without prejudice to the applicant's right to an appearance before the Agency to request a public hearing or to file a further application after revisions are made to meet objections specified as reasons for denial. The Agency shall approve, suspend, modify or reverse the denial of an interim permit if the matter has been appealed to the Agency.

4. If the county has issued an interim permit, the county feedlot pollution control officer shall terminate the permit and issue a certificate of compliance when all necessary corrective and protective measures have been installed.

~~4.~~ 5. The Director shall review within 15 days all animal feedlot permit applications forwarded by the county and shall notify the county of the status of the review and of any intended action with respect to all properly completed animal feedlot permit applications.

~~5.~~ 6. A county no longer wishing to continue in the application review process shall submit a resolution stating its reasons for withdrawal and the effective date of withdrawal to the Director.

~~6.~~ 7. If the Agency finds that a county program is not meeting the requirements of these rules, the Agency may, after giving the county written notice and an opportunity to respond, revoke its approval of the county's application review authority.

C. Procedural Rules and Appeals. All requests for hearings, appeals and other procedural matters not specifically provided for herein shall be governed by the Agency Rules of Procedure, the Rules of the Office of Hearing Examiners and other applicable ~~laws~~ statutes and rules.

D. Severability. If any provision of this rule or the application thereof to any person or circumstances is held to be invalid, such invalidity shall not affect other provisions of this rule or application of any other part of this rule which can be given effect without application of the invalid provision. To this end the provisions of all sections, subsections and subdivisions herein and the various applications thereof are declared to be severable.

E. Variance from Rules. Any person may apply for a variance from any requirements of this rule. Such variances shall be applied for and acted upon by the Agency in accordance with Minn. Stat. §116.07 subd. 5 (1978) and other applicable statutes and rules.

STATE OF MINNESOTA
OFFICE OF HEARING EXAMINERS
ROOM 300 – 1745 UNIVERSITY AVENUE
ST. PAUL, MINNESOTA 55104
(612) 296-6910

RECEIVED
OCT 0 9 1979
MPCA
ATTORNEY GENERAL

October 9, 1979

Mr. Robert Moilanen
Special Assistant Attorney General
Minnesota Pollution Control Agency
1935 West County Road B2
Roseville, Minnesota 55113

Re: In the Matter of the Proposed Adoption of 6 MCAR §§ 4.8051-4.8052 Constituting Rules for the Control of Pollution from Animal Feedlots and the Repeal of Minn. Rules SW 51-61. PCA-79-004-HK

Dear Mr. Moilanen:

Enclosed is the Report of the Chief Hearing Examiner on the issue of substantial change in the above-referenced matter, pursuant to Minn. Stat. § 15.052, subd. 4.

Yours very truly,

DUANE R. HARVES
Chief Hearing Examiner

DRH:sh
Enc.

STATE OF MINNESOTA
OFFICE OF HEARING EXAMINERS

FOR THE MINNESOTA POLLUTION CONTROL AGENCY

IN THE MATTER OF THE PROPOSED)
ADOPTION OF 6 MCAR §§ 4.8051-)
4.8052 CONSTITUTING RULES FOR)
THE CONTROL OF POLLUTION FROM)
ANIMAL FEEDLOTS AND THE REPEAL)
OF MINN. RULES SW 51-62.)

REPORT OF THE
CHIEF HEARING EXAMINER

WHEREAS, hearings were held on April 12, 16, 17, 18, and 19, 1979, before Howard L. Kaibel, Jr., a Hearing Examiner of the State Office of Hearing Examiners, on the above-entitled matter in compliance with Minn. Stat. § 15.0412, subd. 4; and

WHEREAS, the Report of Hearing Examiner made pursuant to Minn. Stat. § 15.052, subd. 3, was issued to the Pollution Control Agency on June 6, 1979; and

WHEREAS, the Pollution Control Agency has now determined to adopt rules pursuant to Minn. Stat. § 15.0412, subd. 4; and

WHEREAS, the Pollution Control Agency has submitted said rules to the Chief Hearing Examiner for review pursuant to Minn. Stat. § 15.052, subd. 4, and 9 MCAR § 2.110; and

WHEREAS, the Chief Hearing Examiner finds that the final proposed rules are not substantially different from those proposed at the public hearing and that the Pollution Control Agency has met all requirements of Minn. Stat. § 15.0412, subd. 4.

NOW, THEREFORE, upon receipt of this Report, the Pollution Control Agency has the responsibility of submitting the complete hearing record and the rules as adopted by the Agency to the Attorney General, notifying all persons who requested to be informed that the hearing record has been submitted to the Attorney General, and publishing in the State Register, all pursuant to Minn. Stat. § 15.0412, subd. 4.

Dated this 9th day
of October, 1979.

DUANE R. HARVES
Chief Hearing Examiner

STATE OF MINNESOTA

COUNTY OF RAMSEY

MINNESOTA POLLUTION

CONTROL AGENCY

In the Matter of the Proposed
Adoption of 6 MCAR §§4.8051-4.8052
Constituting Rules for the
Control of Pollution from
Animal Feedlots and the Repeal

STATEMENT OF COMPLIANCE
WITH MANUAL OF RULE
MAKING PROCEDURES

I, Special Assistant Attorney General Robert C. Moilanen, do hereby declare that I have examined the proposed rules and all related documents and that, based on them and my personal familiarity with the applicable procedures, the Manual of Rule Making Procedures has been followed.

Robert C. Moilanen
Special Assistant
Attorney General

Date: 10/11/79

lishment of lake improvement districts by counties and cities. Any interested persons may submit data or views on this subject in writing or orally to:

Peter Collin
Department of Natural Resources
Third Floor, Space Center Building
St. Paul, Minnesota 55101
(612) 296-4800

Any written material received by the agency shall become a part of the hearing record in the event rules governing this subject are promulgated.

Theresa Bailey-Morrow

July 24, 1978

Pollution Control Agency

Notice of Intent to Solicit Outside Opinion Regarding Proposed Amendment of Rules for Control of Wastes from Livestock Feedlots, Poultry Lots or Other Animal Lots

Notice is hereby given that the Minnesota Pollution Control Agency (MPCA) has begun consideration of proposed revisions to regulations for the control of wastes from livestock feedlots, poultry lots or other animal lots. A draft of the proposed revisions has been prepared by the agency staff, and copies of it may be reviewed at Regional Development Commission Offices or can be obtained by contacting:

Terrence E. Huntrods
Division of Solid Waste
Minnesota Pollution Control Agency
1935 West County Road B2
Roseville, Minnesota 55113

In order to assess the suitability of the draft proposed revisions to rules SW 51-61, the agency hereby requests comments from all interested persons or groups concerning the subject matter of the draft proposal. Written statements of information and comments may be sent to Mr. Huntrods at the above address. Oral statements and comments will be received during regular business hours over the phone at (612) 296-7327 or in person at the above address.

All statements and comments on this proposal must be received by August 31, 1978. Any written material received by the agency or addressed to Mr. Huntrods at the above address will become part of the hearing record.

Should the agency determine that the proposed draft revisions to SW 51-61, or some other revisions to the Regulations for the Control of Wastes from Livestock Feedlots, Poultry Lots or other Animal Lots should be promulgated, further notice of the rule and of the hearings thereon will be given as required by law, including notice in the *State Register*.

Sandra S. Gardebring
Executive Director

Office of the Secretary of State
Administration Division

Open Appointment Process: Notice of Openings on State Agencies — Application Procedures

Pursuant to Laws of 1978, ch. 592, the legislature has implemented an Open Appointment Process by which the public is informed of openings on state multi-member agencies (boards, commissions, councils) created by statute and having statewide jurisdiction.

Application forms may be obtained at the Office of the Secretary of State, 180 State Office Building, St. Paul, MN 55155, (612) 296-3266. Contact the Secretary of State for the Open Appointment Process information brochure and specific agency related information. Applications are due on August 18.

Human Services Occupations Advisory Council: One vacancy; public member; open immediately.

State Board of Investment Advisory Council: Two vacancies; experienced in corporate or governmental finance or in general investment matters; open immediately.

Workers' Compensation Advisory Council: One vacancy; labor representative; open immediately.

STATE OF MINNESOTA

COUNTY OF RAMSEY

MINNESOTA POLLUTION

CONTROL AGENCY

In the Matter of the Proposed Adoption of 6 MCAR §4.8051-4.8052 Constituting Rules for the Control of Pollution from Animal Feedlots and the Repeal of Minn. Rules SW 51-61

STATEMENT OF NEED AND REASONABLENESS

I. INTRODUCTION

These rules, 6 MCAR §4.8051-4.8052, are being promulgated pursuant to Minn. Stat. §§115.03 and 116.07 (1978) which authorize the Minnesota Pollution Control Agency (hereinafter the "Agency") to adopt reasonable standards and rules in order to prevent, control or abate water pollution and, specifically, authorize the Agency to adopt rules which relate to the deposit on land of any material that may tend to cause pollution. The above-captioned rules will replace Minn. Rules SW 51-61, therefore, those rules are being repealed through the same hearing process.

II. THE NEED FOR PROPOSED 6 MCAR §4.8051-4.8052 AND REPEAL OF MINN. RULES SW 51-61

The need for proposed 6 MCAR 4.8051-4.8052 and repeal of SW 51-61 arises from three sources:

A. The mandates which Minnesota statutes place upon the Agency; and

B. The large number and widespread location of animal feedlots which have the potential to pollute surface and ground water; and

C. The ineffectiveness of Minn. Rules SW 51-61 to resolve the environmental problems associated with the operation of animal feedlots.

A. The Mandates which Minnesota Statutes Place upon the Agency.

The Agency was established in accordance with Minn. Stat. §116.01 (1978) in order

> [T]o meet the variety and complexity of problems relating to water, air and land pollution in the areas of the state affected thereby, and to achieve a reasonable degree of purity of water, air and land resources of the state consistent with the maximum enjoyment and use thereof in furtherance of the welfare of the people of the state . . .

Specifically, the Agency is granted powers to promulgate rules in order to prevent, control or abate water pollution and to promote solid waste disposal control. Minn. Stat. §§115.03 (e) and 116.07 subd. 2 (1978). Finally, the Agency is granted the authority to develop a permitting program for animal feedlots in cooperation with counties. Minn. Stat. §116.07 subd. 7 (1978).

The proposed rules are intended to meet the legislative mandate directing the Agency to achieve a reasonable degree of purity of water, air and land resources through the establishment of standards and a permitting process, in cooperation with counties, which will control pollution from animal feedlots.

B. The Large Number and Widespread Location of Animal Feedlots Which Have the Potential to Pollute Surface and Ground Water.

According to estimates, there are approximately 90,000 animal feedlots operating in the State of Minnesota. A byproduct from the operation of animal feedlots is the generation of animal manure. The chemical constituents of animal manure tend to be rich

in nutrients and pathogens. In most of the operating animal feedlots in Minnesota, the manure is temporarily stored and then applied to adjoining farmlands as a domestic fertilizer. Provided usual rates of application are employed, this process results in nominal environmental impact while providing a substantial benefit to farmers raising crops.

However, if the storage or spreading of the manure is mismanaged or wrongly applied, pathogens and nutrients from animal manures, such as phosphorus, may enter waters of the State. The contribution of nutrients to surface water caused by the mismanagement of animal manure may accelerate algae growth resulting in eutrophication and a reduction of the level of dissolved oxygen in the water. This impact may result in death to aquatic life.

In 1976, the Soil Conservation Service of the United States Department of Agriculture estimated 17,000 feedlots in Minnesota have a significant pollution problem due to their location and/or operating technique. This analysis was subsequently confirmed by the Agency's Water Quality Planning Division which performed an inventory of 6,000 animal feedlots (with outdoor lots) located in shoreland areas of Minnesota and determined that approximately 90% of these animal feedlots contributed nutrients to waters of the State. Furthermore, in 1967, the States of Minnesota and North Dakota conducted a study of the source of pollution in Big Stone Lake in order to determine the cause of the accelerating deterioration of the water quality. This study concluded that 24% of the phosphorus entering Big Stone Lake originated from confined

animal facilities. This finding of excessive phosphorus loading causing deterioration in water quality has been subsequently borne out by numerous other studies including an analysis of impacts on Christmas Lake in Minnesota. Additional studies coming to similar conclusions concerning nutrient loading have been performed in the States of Texas, Kansas and South Dakota.

Additionally, improper long term storage of animal manure may impact ground water by migrating through surface soils. Such an impact may contaminate shallow drinking water wells through the introduction of nitrates and pathogens such as fecal coliform. Nitrates have a tendency to be highly mobile and diffuse quickly through the ground water. On the other hand, most pathogens die off when placed in an adverse environment such as sunlight and air. However, some pathogens can remain active and survive for short periods of time in ground water. Therefore, proper handling of animal manures is essential to avoid adverse impact upon ground water.

Finally, animal feedlot operations can cause serious odorous air pollution problems. This is particularly true during the Spring when odorous gases produced by anerobic decomposition of animal manure are released. The proposed rules do not address odorous air pollution from animal feedlots, rather, the Agency will employ Minn. Rule APC 9 in order to regulate those operations causing a serious odor problem. Minn. Rule APC 9 requires animal manure to be stored in a nuisance free manner. It has been the Agency's experience that storage of manure for less than one year

generally causes no significant odorous air pollution problem, therefore, the proposed rules require domestic fertilizer to be stored for no more than one year.

Therefore, the mismanagement of animal wastes represents a potential threat to the air quality and water quality of Minnesota's surface and ground water. The proposed rule is intended to provide for environmentally sound management of animal manures.

C. The Ineffectiveness of Minn. Rules SW 51-61 to Resolve the Environmental Problems Associated with the Operation of Animal Feedlots.

The existing rules, Minn. Rules SW 51-61, governing the operation of animal feedlots have failed to meet the environmental mandates placed upon the Agency by the Legislature. The ineffectiveness of these rules is twofold. First, Minn. Rules SW 51-61 require the Agency to evaluate and issue permits for each of the approximately 90,000 livestock and poultry operations in Minnesota. To date, the Agency has permitted approximately 9,000 feedlots and currently processes approximately 200 permits each month. The vast majority of these permits are for facilities with little or no pollution potential. Some of the permits are issued for facilities with potential pollution problems and in those cases special conditions and compliance schedules are placed in the permit. However, because so much of the Agency's time is spent evaluating and issuing permits for facilities which present no potential pollution hazard, not enough time can be allocated to

complaint follow-up and enforcement of those facilities presenting a potential or actual pollution hazard. Furthermore, even though many operations present no pollution potential, the administration of the existing rules often results in a delay in construction approval up to 40 days. This can present difficulties in a state which has a relatively short construction season.

The second major problem with Minn. Rules SW 51-61 is that they currently prohibit new feedlots or expansions of feedlots within the following areas: shoreland, floodway, 1,000 feet of public park, 1/2 mile to a concentration of 10 or more private residences at the time of construction. As a result of changing technology (total confinement with no potential for runoff) or natural conditions which protect against pollution, operations have been prohibited from beginning or expanding without a variance from these location requirements even though there is no potential pollution hazard. Approximately 2% of the permits issued to date have involved variances. While the location requirements may be an indicator of environmentally sensitive areas, they are not by themselves an environmental basis for prohibiting feedlot construction. In the case of the setback from concentrated housing or public parks, the Agency Board has been required to make determinations on matters more appropriately addressed through local zoning. Because Minn. Rules SW 51-61 only address construction of the feedlot, housing developments or parks which are established may effectively limit a feedlot operators ability to expand his operation even though the expansion will have no environmental impact.

The new rules will address the administrative problems which have plagued the old rules by allowing counties to issue certificates of compliance to operators in certain situations where there is no serious pollution hazard. This process will provide a greater service to the feedlot operator by avoiding unnecessary construction delays. This process will also ease the administrative burden on the Agency in processing permits thereby allowing the Agency to spend more time evaluating those facilities which present a potential pollution hazard. Additionally, the new rules define potential pollution hazard in such a manner as to require greater Agency involvement in those circumstances which warrant such involvement.

D. Conclusion

Existing State statutes require the Agency to protect the purity of water, land and air resources of the State of Minnesota. A potential threat to the purity of surface and ground water is presented through the improper design, construction, location and operation of animal feedlots. The existing regulatory framework for insuring the protection of these resources is administratively cumbersome and inadequate. Additionally, the existing regulatory framework is outmoded in light of changes in livestock production techniques and because of the expanding interest by counties in being involved with the program. Therefore, there is a strong need to develop new rules which protect animal feedlot operations from an inefficient regulatory process while allowing the Agency

to devote more energy to those animal feedlot operations which present an actual or potential pollution problem.

III. REASONABLENESS OF PROPOSED RULES 6 MCAR §4.8051-4.8052 AND REPEAL OF MINN RULES SW 51-61.

A. Exhibits

As proof of the reasonableness of proposed rules 6 MCAR §4.8051-4.8052 and the repeal of Minn. Rules SW 51-61, the Agency intends to introduce the following exhibits:

1. Agricultural Extension Service, University of Minnesota and Minnesota Pollution Control Agency, Handbook for Animal Pollution Control Workshop, March, 1976.

2. Barr Engineering Co. A System for Evaluating the Potential Pollution Hazard of Animal Lots, November, 1975.

3. Foley, J. E. The Pollution Potential of Feedlots Along the Main Stream of the Big Souix River, M.S. Thesis, Civil Engineering Department, South Dakota State University, 1968.

4. Gilbertson, C. B.; McCalla, T. M.; Ellis, J. R.; Cross, O. E; Woods, W. R. Runoff, Solid Wastes, and Nitrate Movement on Beef Feedlots, Journal Water Pollution Control Federation, Vol. 43, pp. 483-493, March, 1971.

5. Iowa Development Commission/Agricultural Division. Odors, Neighbors and Livestock Farmers, Sp. 18555.

6. Kreis, R. D.; Scalf, M. R.; McNabb, J. F. Characteristics of Rainfall Runoff from a Beef Cattle Feedlot, EPA-R2-72-061, September, 1972.

7. Lehman, O. R.; Stewart B. A.; Mathers, A. C. Seepage of Feedyard Runoff Water Impounded in Playas, Texas A & M University, Texas Ag. Exp. Sta. MP-944, February, 1979.

8. Miner, J. R. (Ed.). Farm Animal-Waste Management, North Central Regional Publication 206, Special Report 67, May, 1971.

9. Miner, J. R.; Smith, R. J. Livestock Waste Management with Pollution Control, North Central Regional Reserch Pub. 222, MWPS-19, June, 1975.

10. Minnesota Pollution Control Agency Rules of Procedure 1-11.

11. Minnesota Pollution Control Agency, Animal Wastes, September, 1975.

12. Minnesota Pollution Control Agency. Guidelines for Controlling Seepage from Animal Lot Collection Basins, unpublished manuscript.

13. Minnesota Pollution Control Agency. 1976 Minnesota Water Quality Inventory, "Report to Congress," Section 305(b), April 1976.

14. Minnesota Pollution Control Agency. Report on Disposal of Livestock Wastes from Livestock Feedlots in the Minnesota Watershed of Big Stone Lake, April, 1967.

15. Minnesota Pollution Control Agency. Report on Investigation of Water Quality of Christmas Lake Watershed, January 9, 1975.

16. Minn. Rule APC 9.

17. Minn. Rule WPC 14, 15, 24 and 36.

18. Minn. Rules SW 1-12.

19. Minn. Rules SW 51-61.

20. Minn. Stat. §§115 and 116 (1978) which set out the powers and duties of the Minnesota Pollution Control Agency.

21. Overdahl, C. J. Using Manure as a Fertilizer, University of Minnesota, Extension Folder 168, 1974.

22. Pratt, G. L., et al. Livestock Waste Facilities Handbook, MWPS-18 Midwest Plan Service, Iowa State University, Ames, Iowa, 50011, 1975.

23. Procedural Exhibits including, but not limited to, required Notices, Affidavits of Mailing, and Affidavits of Publication.

24. Rules as Proposed, 6 MCAR §4.8051-4.8052.

25. Shuyler, L. R. Environmental Protecting Cocepts of Beef Cattle Feedlot Wastes Management, National Environmental Research Center, ORD. U.S. EPA, Corvallis, Oregon, July, 1973.

26. Spray, R. H.; Peele, T. C. Nitrogen Levels Under a Swine Feedlot, December, 1974.

27. Stewart, B. A.; Viets, F. G., Jr.; Hutchinson, G. C.; Kemper, W.D. Nitrate and Other Water Pollutants Under Fields and Feedlots, Environment Science and Technology, Vol. 1, pp. 736-639, September, 1967.

28. Swanson, N. P. Hydrology and Characteristices of Feedlot Runoff, Proceedings of Seminar on Control of Agricultural-Related Pollution, Lincoln, Nebraska, July, 1972.

29. Swanson, N. P. Hydrology of Open Feedlots in the Corn Belt, Proceedings of Midwest Livestock Waste Management, Iowa State University, Ames, Iowa, November, 1973.

30. U.S. Army Corps of Engineers. Big Stone Lake Feasibility Report, "Silt Reduction and Pollution Control", June, 1975.

31. U.S. Environmental Protection Agency. Feedlots-Point Source Category, EPA-440/1-74-004-A, January, 1974.

32. White, R. K.; Forster, D. K. Evaluation and Economic Analysis of Livestock Waste Management Systems, EPA 600/2-78-102, May, 1978.

33. Young, R. A.; Huntrods, T.; Anderson, W. Effectiveness of Nonstructural Feedlot Discharge Control Practices, American Society of Agricultural Engineers, St. Joseph M. 49035, Technical Paper No. 78-2572, 1978.

B. Witnesses

The Agency may call one or more of the following expert witnesses to testify on proposed 6 MCAR §4.8051-4.8052 and the repeal of Minn. Rules SW 51-61:

1. Dale Thompson, Staff Hydrologist, Division of Water Quality, Minnesota Pollution Control Agency, who will testify on the need for a regulatory program governing animal feedlots. He will discuss the history and development of animal feedlot operations in the United States and Minnesota; the chemical nature of animal feedlot waste; the nature of environmental problems arising

from animal feedlot operations; specific studies of environmental problems from the operation of animal feedlots; and the Legislative response to environmental problems caused by the operation of animal feedlots.

2. Wayne Anderson, Staff Engineer, Division of Water Quality, Minnesota Pollution Control Agency, who will testify on the development of 6 MCAR §4.8051-4.8052. Mr. Anderson will discuss the administration of the animal feedlot program under Minn. Rules SW 51-61; the intent of the proposed new rules; the need for and reasonableness of each subsection of the proposed rules; and the public comments received under the old program and during the development of 6 MCAR §4.8051-4.8052.

3. Randy Burnyeat, Staff Engineer, Division of Water Quality, Minnesota Pollution Control Agency, who will testify on the applicable water quality standards set out in Minn. Rules WPC 14 and 15; the classification of surface waters under Minn. Rules WPC 24; and the National Pollution Discharge Elimination System Permitting Process under Minn. Rules WPC 36.

C. General Overview and Discussion of the Intent Behind 6 MCAR §4.8051-4.8052

The proposed rules establish a standard for the construction, location and operation of an animal feedlot or manure storage area. The proposed standard is that a facility shall not create or maintain a potential pollution hazard. A potential pollution hazard is defined to be a condition which indicates a potential

for pollution of land or waters and includes location of an animal feedlot within shoreland, within flood plain, or in an area draining to a sinkhole; or the location of an animal feedlot in an area with shallow soils overlying fractured or cavernous rock, or the location of an animal feedlot within 100 feet of a water well. Additionally, an animal feedlot or manure storage area whose construction or operation will allow a discharge of pollutants to surface waters of the state in excess of applicable standards during a rainstorm event of less magnitude than the 25 year-24 hour event, or will allow uncontrolled seepage of pollutants into the ground water, or will violate any applicable state rules and regulations shall be considered a potential pollution hazard. The applicable water quality standards for specific waters of the State are set out in Minn. Rules WPC 14, 15 and 24.

Additionally, the proposed rules establish standards for the storage and transportation of animal manures. Animal manures shall not be stored for longer than one year without receiving a permit, shall not be applied at rates exceeding local agricultural crop nutrient recommendations and shall be transported in leakproof vehicles unless the animal manure is applied to adjacent fields.

Furthermore, the proposed rules establish a certifying and permitting process to be employed in cooperation with any county which voluntarily elects to participate in the program. The proposed rules establish the procedures by which counties may participate in the program. All animal feedlots with less than ten

animal units will not be required to apply for a permit or certificate of compliance, unless they create or maintain a potential pollution hazard. All animal feedlots greater than ten animal units must apply for a permit or certificate of compliance when they begin operation or have a change in the nature of their operation. Those animal feedlot operations which do not create or maintain a potential pollution hazard will receive a certificate of compliance from the Agency or from the county within which it is located if the county is participating in the program. Under the program, counties would certify compliance for animal feedlots of less than 1,000 animal units where no potential pollution hazard exists or for those feedlots under 300 animal units where a potential pollution hazard has been corrected. The Agency will certify all feedlots over 1,000 animal units and those feedlots larger than 300 animal units where a potential pollution hazard has been mitigated.

In those cases where a potential pollution hazard will be corrected within 6 months of the review of the permit application, a county which elects to participate in the program will issue an interim permit if the feedlot operation is smaller than 300 animal units. For operations larger than 300 animal units in which the potential pollution hazard will be corrected in 6 months, the Agency will issue the interim permit. The interim permit shall expire within 6 months of issuance and a certificate of compliance shall be issued provided the owner of the animal feedlot has mitigated the potential pollution hazard.

Finally, for those feedlot operations in which a potential pollution hazard will not be corrected within 6 months or where manure is not a domestic fertilizer, an Agency permit will be required. The Agency may place those conditions in the permit which are necessary to minimize any adverse environmental impact, or, the Agency may elect to not permit the facility.

The intent behind the adoption of 6 MCAR §4.8051-4.8052 and the repeal of Minn. Rules SW 51-61 is to allow the Agency to focus upon those feedlot facilities most likely to cause an environmental impact by easing the administrative burden on the Agency of processing permits for environmentally sound operations.

D. Specific Analysis of 6 MCAR §4.8051-4.8052

Preamble

This provides the general intent behind the rules and notes that these rules will only become final and supercede Minn. Rules SW 51-61 upon filing with the Secretary of State.

1. 6 MCAR §4.8051 Rules for the Control of Pollution from Animal Feedlots

a. General Applicability

These rules will govern the storage, transportation, disposal and utilization of animal manure and the process for application and issuance of permits and certificates of compliance for animal feedlots. This section is reasonable because it places individuals on notice of the scope of this rule.

b. Definitions

The definitions in this section are included to specify and/or clarify certain terms used in the rules. Many of these definitions are found in Minnesota statutes and/or in Minn. Rules SW 51-61. During his testimony, Mr. Anderson will explain the need and reasonableness of each definition.

It is important to note at this time that the definition of "potential pollution hazard" includes location requirements as well as performance standards. The inclusion of location requirements is reasonable considering that a recent Agency inventory and analysis of 6,000 animal feedlots in shoreland areas concluded that 90% of those animal feedlots contributed nutrients to waters of the State. The inclusion of other location requirements relate to environmentally sensitive areas which warrant Agency review.

The inclusion of the 25 year-24 hour rainfall event as a standard for considering discharge is the same as that employed by the Environmental Protection Agency, the Minnesota Pollution Control Agency in the Administration of a National Pollutant Discharge Elimination System Permit Program, and equivalent to the runoff control design criteria used by the Soil Conservation Service of the United States Department of Agriculture. Additionally, employing applicable water quality standards will insure consistency with the existing water quality program in Minnesota. It is reasonable that the Agency would wish to maintain uniformity with these other programs.

Finally, the definition of "corrective and protective measures" is added to recognize that even with the existence of a potential pollution hazard, the hazard may be mitigated or eliminated by the feedlot operator. Therefore, the mere location of the facility will not result in a cessation of operation provided a certificate of compliance or permit is obtained by the feedlot owner.

c. Animal Feedlot Pollution Control Requirements

These rules have been written in a manner intended to allow flexibility to each feedlot owner to select management options and pollution control measures which best suit each individual operation. It is the intent of the Agency to work on a cooperative basis with the feedlot owner to determine which pollution control measures will best handle the discharge of pollutants while not disrupting the feedlot operation. A situational approach to the development of pollution control measures is reasonable in light of the various methods, types and location of animal feedlots in the State of Minnesota.

This section also serves to clarify the feedlot owners responsibility should there be a difference between the owner and the operator. This is reasonable in that it places owners on notice of the Agency's intent to hold them responsible for their operations.

This section of the rule sets out the standards which must be met in order to construct, locate and operate an animal feedlot or

manure storage area. Under this provision a facility shall not create or maintain a potential pollution hazard unless a certificate of compliance or permit is obtained. By regulating the creation and maintenance of a potential pollution hazard, the Agency will protect Minnesota resources from further environmental degradation.

d. Feedlot Permitting Requirements

This section covers the procedures and conditions for processing and issuing animal feedlot permits, and certificates of compliance. This section also indicates who is required to make application for a permit. The existing rules, Minn. Rules SW 51-61, require permit applications prior to construction and operation of new feedlot facilities, changes to existing facilities or changes in ownership. Permit application at the point of planning and monetary investment is considered a positive aspect of the existing rules and is being retained in proposed rules, 6 MCAR §4.8051-4.8052. This section also identifies the information necessary to evaluate an individual feedlot operation or pollution control system. The Agency will not require that a permit be issued to the feedlot owner when the review of the application indicates that the animal manure is being used as a domestic fertilizer and no potential pollution hazard will be created. Similarly, no permit will be required when a potential pollution hazard has been addressed by corrective and protective measures. In these cases, a certification of compliance will be issued to

the feedlot owner indicating compliance with Agency rules and stating which equipment qualifies for the current Minnesota Income Tax Feedlot Pollution Credit. This process is intended to reduce the time required to process permit applications for those feedlots having no potential pollution hazard and thereby minimizes construction approval delays. This process will also minimize government supervision of animal feedlot operations where unnessary.

Permits will be required for those feedlots which have a potential pollution hazard which is not addressed by corrective and protective measures or when manure is not being used as domestic fertilizer. The permit will include those requirements the Agency feels to be necessary to insure compliance with applicable water quality standards. The Agency recognizes that building season constraints may cause delay in the construction of control measures, therefore, a six month interim permit may be issued by the Director to cover any discharges during the construction period. When suitable control measures are installed on a facility which has received an interim permit, the necessity for the interim permit will no longer exist. Accordingly, the interim permit will be terminated and a certification of compliance will be issued. However, if the review process reveals that a National Pollution Discharge Elimination System Permit or State Disposal System Permit is required, the applicant will be notified of the permit application requirements set out in Minn. Rule WPC 36.

e. Existing Permits for the Construction and Operation of Livestock Feedlots, Poultry Feedlots and Other Animal Lots.

The Agency has issued numerous permits for feedlots in accordance with the existing rules. These permits will continue to be effective until such time as there is a change in operation or change of ownership. At that time, the permit will be reconsidered pursuant to these rules. This is reasonable since the existing permits were applied for and issued in accordance with applicable statutes and regulations and since it would be administratively impossible to process hundreds of permit applications the day after the rules are adopted.

f. Procedural Rules and Appeals

Minnesota has standard rules for appeals and other procedural matters which were adopted in accordance with Minn. Stat. ch. 15 (1978). These rules include the Minnesota Pollution Control Agency Rules of Procedure 1-11, and the Rules of the Office of Hearing Examiners. These rules can be obtained upon request of the Documents Section, Minnesota Department of Administration, Room 140, Centennial Building, 658 Cedar Street, St. Paul, Minnesota 55155, at a price of $2.00. The purpose of this section is to provide a reasonable safeguard of the rights of all potentially affected individuals.

g. Severability

This section contains the standard severability clause in an effort to assure that a future invalidity of any subsection or subdivision will not render invalid the entire rule.

h. Variance

This section is included to allow for variance from the rules in situations where strict conformity would be unreasonable, impactical, or cause undue hardship. Minn. Stat. ch. 15 and §116.07 (1978); Minnesota Pollution Control Agency Rule 6; and the Rules of the Office of Hearing Examiners govern the procedures for obtaining variances. It is reasonable to assume that circumstances may exist which merit the relaxation of the requirements of these rules.

2. 6 MCAR §4.8052 Rules for Permit Processing by Counties

a. General Applicability

The rules are proposed pursuant to Minn. Stat. §116.07 subd. 7. These rules govern the county role in processing permits and establish the Agency's supervisory authority. This section is reasonable because it places the counties on notice of the scope of this rule.

b. County Processing Procedure

This section establishes the procedure for a county to assume authority to process feedlot permits and discusses the specific provisions involved in processing of permit applications by counties. The section establishes authorities and responsibilities of counties desiring to process permit applications. This rule also establishes the Agency's supervisory authority.

The minimum requirements of a county in the program include designation of a county feedlot officer who will distribute and assist in completing application forms, review the completed applications and make recommendations to the Agency. This establishes a minimum level of service to the animal feedlot operator while acknowledging the county's awareness of local conditions and requirements. Furthermore, the section describes the proper action to be taken by the county for each feedlot permit application and differentiates between those applications which require additional Agency review.

The differentiation between those permit applications requiring Agency review and those which can be processed by the county is based on size categories and potential pollution status. The use of 300 animal units and 1,000 animal units as size differentials are the same as those employed by the Environmental Protection Agency and will insure that those facilities needing National Pollution Discharge Elimination System permits will be reviewed by the Agency. The inclusion of potential pollution

status as a differential is intended to allow for county action on those facilities with minimal environmental impact and Agency review where the standards are not being met or where the Agency's technical capabilities are required. Additionally, the rules will require Agency involvement if an animal feedlot is located in an environmentally sensitive area or where manure is not being used as a domestic fertilizer. The use of feedlot size and pollution potential as the factors determining the extensiveness of Agency involvement is a reasonable approach because it insures that the Agency's resources and expertise will only be employed in those circumstances warranting involvement. Furthermore, it is reasonable to not over regulate feedlot owners in the State of Minnesota.

The section also provides for additional authority available to the county for issuing certain interim permits and establishes the procedure for issuing those permits. This procedure allows for a cooperative approach between the counties and the Agency in the administration of interim permits for facilities under 300 animal units. Additionally, this procedure establishes a time frame for Agency review of county actions. This timetable and the nature of the review of county actions is mandated by Minn. Stat. §116.07 subd. 7 (1978). These time frames are established to minimize delay for the feedlot operator.

Finally, procedures are provided for withdrawal by a county from the program as well as revocation of Agency approval of the county program where, after written notice, the Agency finds a

county is not acting inconsistently with the rules. This will maintain the voluntary status of the county program and yet allow Agency supervision to maintain statewide uniformity for review of animal feedlots. It is reasonable to maintain a uniform approach to regulate feedlot operations and to maintain a cooperative approach between government entities.

c. Procedural Rules and Appeals

Same rationale as employed in 6 MCAR §4.8051(f).

d. Severability

Same rationale as employed in 6 MCAR §4.8051(g).

e. Variances

Same rationale as employed in 6 MCAR §4.8051(h).

Terry Hoffman
Executive Director
Minnesota Pollution Control Agency

Dated: March 16, 1979

STATE OF MINNESOTA
OFFICE OF HEARING EXAMINERS

FOR THE MINNESOTA POLLUTION CONTROL AGENCY

In the Matter of the Proposed Adoption of 6 MCAR Sec. 4.8051-Sec. 4.8052 Constituting Rules for the Control of Pollution from Animal Feedlots and the Repeal of Minn. Rules SW 51-61.

REPORT OF HEARING EXAMINER

The above-entitled matter came duly on for hearing before Howard L. Kaibel, Jr., Hearing Examiner, on the 12th day of April, 1979, at the Board Room of the Minnesota Pollution Control Agency, 1935 West County Road B-2, Roseville, Minnesota, commencing at 10:00 a.m. Said hearing was duly recessed and reconvened at the following times and locations: Basement Conference Room of the Minnesota Department of Transportation, 1010-21st Avenue Northwest, Industrial Park, Owatonna, Minnesota, on April 16, 1979, commencing at 1:00 p.m. and 7:00 p.m.; Room 234 C.A.B., Southwest State University, Marshall, Minnesota, on April 17, 1979, commencing at 1:00 p.m. and 7:00 p.m.; Commissioners Room at Becker County Courthouse, Lake Street, Detroit Lakes, Minnesota, on April 18, 1979, commencing at 1:00 p.m. and 7:00 p.m.; Meeting Room at Crow Wing County Courthouse Annex, East Laurel Street, Brainerd, Minnesota, on April 19, 1979, commencing at 1:00 p.m. and 7:00 p.m.

All interested persons, representatives of individuals or associations, and other interested groups present at the hearing had an opportunity to present evidence, make statements and question Minnesota Pollution Control Agency (hereinafter "Agency") witnesses. Robert C. Moilanen, Special Assistant Attorney General, appeared for and on behalf of the Agency. Approximately 60 members of the public attended the nine hearings.

Pursuant to Minn. Stat. Sec. 15.0412, subd. 4, this Report shall be available for review to all affected individuals upon request for at least five days.

Thereafter, the Agency shall, if it proposes to adopt the rules as originally proposed or amended, submit a copy of the Order Adopting Rules, a copy of any additional agency findings, a copy of the rules as originally proposed, and a copy of the rules as adopted to the Chief Hearing Examiner for review pursuant to Minn. Stat. Sec. 15.052, subd. 4. The submission to the Chief Hearing Examiner shall precede review by the Attorney General. The Chief Hearing Examiner shall complete his review and submit his report to the Agency on the issues of substantial changes in the rule and compliance with Minn. Stat. Sec. 15.0412 within ten calendar days. The Agency will be responsible for filing the rules with the Attorney General and for notifying persons who have indicated that they wish to be notified of such filing.

Based upon all the records and proceedings herein, the Examiner makes the following:

FINDINGS OF FACT

1. That on July 31, 1978, a Notice of Intent to Solicit Outside Opinion on the above-entitled rules was published at 3 State Register 142. (Ex. 1)

2. That on December 19, 1978, the Agency Board authorized a public hearing on the above-entitled rules and the repeal of Minn. Rules SW 51-61. This authorization was reconfirmed at an Agency Board meeting on February 27, 1979. (Ex. 3)

3. That on February 16, 1979, the Agency filed with the Office of Hearing Examiners the following documents:

a. A proposed Order for Hearing.
b. A proposed Notice of Hearing.
c. A statement estimating the number of people who will attend the hearing and estimating the length of time of the hearing.

4. That on March 6, 1979, the Secretary of State's mailing list was delivered to and received by the Agency. (Exs. 7 and 8)

5. That on March 9, 1979, the Agency mailed the Notice of Hearing to all persons and associations who had registered their names with the Secretary of State for the purpose of receiving such notice and numerous others who the Agency presumed to have an interest in the matter. (Ex. 9)

6. That on March 12, 1979, the Notice of Hearing, a copy of proposed 6 MCAR Sections 4.8051-4.8052 and the repeal of Minn. Rules SW 51-61 was published at 3 State Register 1716-1729. (Ex. 6) The Notice of Hearing was also published in the EQB Monitor, Volume III, Issue 37, dated March 19, 1979, and in the local newspapers where the hearings were to be held. (Exs. 62 and 10)

7. That on March 16, 1979, the Agency filed with the Office of Hearing Examiners the Statement of Need and Reasonableness in support of proposed 6 MCAR Sections 4.8051-4.8052 and the repeal of Minn. Rules SW 51-61. (Ex. 11) Additionally, the Agency filed with the Office of Hearing Examiners the following documents:

a. The Order for Hearing. (Ex. 4)
b. The Notice of Hearing. (Ex. 5)
c. The Certificate of Board's Authorizing Resolution. (Ex. 3)
d. The Affidavit of Receipt of Secretary of State's List. (Ex. 8)
e. The Certificate of Delivery of Secretary of State's List. (Ex. 7)
f. The Affidavit of Mailing. (Ex. 9)

8. That the record for this proceeding remained open 20 days, until May 9, 1979, to allow for submission of written comments. All of the documents filed by the Agency in this matter are a part of the record and have been available for inspection and duplication by any persons, groups or associations.

9. That the statutory authority for the promulgation of these rules by the Agency is contained in Minn. Stat. Chs. 115 and 116 (1978). Specifically, the statutory authority is found at Minn. Stat. Sec. 115.03, subd. 4, and Sec. 116.07, subd. 7 (1978). (Ex. 45)

10. That the need for and reasonableness of the proposed rules and the repeal of Minn. Rules SW 51-61 arises primarily from four areas, namely: (a) the statutory mandates directing the Agency to protect the State's natural resources from pollution; (b) the adverse environmental impacts caused by animal wastes which are mismanaged; (c) the need to grant counties greater authority in order to make the review and permitting system more efficient; and (d) the desire to make the Agency's animal feedlot regulatory program administratively compatible with other programs being administered by the Agency. (Exs. 52, 53 and 54) A further discussion of the need for and reasonableness of each of the provisions of the proposed rule and the repeal of Minn. Rules SW 51-61 is unnecessary on this record. Such an analysis is contained in the Statement of Need and Reasonableness submitted by the Agency and distributed to all hearing participants. (Ex. 11) Additionally, the testimony of Mr. Anderson of the Agency went into considerable detail documenting the need for and reasonableness of each provision and section of the rule. (Ex. 53) Therefore, except as hereinafter noted with regard to specific provisions, the proposed rule and the repeal of Minn. Rules SW 51-61 is found to be needed and reasonable and the Agency has documented this by an affirmative presentation of facts. The Agency has also demonstrated that the rule is authorized by statute.

11. That most of the comments received were supportive of the Agency's proposed rules or were inquiries into how the program would work. Few comments were received which attacked the need for and reasonableness of a regulatory program controlling pollution from animal feedlots. Conversely, few comments were received which suggested the need for a stronger regulatory program than the program being proposed by the Agency. Some of the comments received related to specific circumstances or situations in which individuals were seeking assistance from the Agency. This was true for certain citizens of Essig, Minnesota, who testified in Marshall, concerning the operation of a specific animal feedlot and a citizen from Nicollet County who testified in Owatonna about her neighbor's animal feedlot operation. Similarly, a number of participants in the hearing expressed a great deal of concern over the lack of coordination between the governmental programs being administered by the Soil Conservation Service, the Agriculture Stabilization and Conservation Service and the Agency. These comments concerning specific animal feedlot operations and the lack of coordination between certain government agencies are important and should be addressed by the Agency, however, they were not directly germane to this rulemaking process.

Most of the provisions and sections were not opposed, and this Report is generally limited to those that were. All of the concerns discussed on the record and in written comments have been carefully considered in the preparation of this Report. Specific reference to many, if not most, of them is omitted because they relate to matters that are not properly the subject of this Report because they concern proposed rules which are merely a continuation of previously existing adopted rules. The objection to a regulation of feedlots of less than 300 animal units (more restrictive than federal

EPA requirements) and of winter feeding areas are examples. These requirements are already part of State law and are contained in Minn. Rule SW 51-61. Because these provisions simply continue existing rules, the Agency is under no obligation to document by an affirmative presentation of facts either the need for or the reasonableness of their retention. Specific reference to many, if not most, of the other objections to new provisions is omitted because the Agency has recognized their validity and agreed to rectify them in its final proposed Findings. (The "Recommendations" section of those Findings containing these rectifications is attached for the convenience of persons ordering this Report.)

The Agency Staff was generally deservedly commended by the public for meeting exhaustively with representatives of primarily affected organizations prior to initiation of this rules hearing and for its willingness to consider further revisions to accommodate the concerns expressed by the public at the hearings.

12. That further specificity is required regarding the definition of "potential pollution hazard" contained in the proposed rules. Mr. Baltezore at the Detroit Lakes hearing (and in written comments) and others urged strongly that this be given further attention because it goes to the "heart" of the matter. Proposed 6 MCAR Sec. 4.8051 B.19.b. would define this term as discharges to state water "in excess of applicable standards . . . or will violate any applicable state rules and regulations." The public concern related to identifying "applicable standards" and overlapping rules of other state agencies. Agency Staff responded that they were constrained by the broad definition of pollution contained in the State Environmental Policy Act (Minn. Stat. Sec. 116 D). They further indicated that the "applicable standards" referenced meant the water quality standards contained in Minn. Rules WPC 1-13 and 16-33. Careful research indicates that the Staff is correct in their interpretation of the applicable statutes governing issuance of permits. The public concern should nonetheless be partially alleviated by the following revision to the definition:

> . . . discharge of pollutants to surface waters of the state in excess of applicable standards (Minn. Rule WPC 1-13 and 16-33) . . . or will violate any applicable more restrictive state rules ~~and regulations~~.

The specification of the intended standards to be applied is necessary to make the rule reasonable. With the revision, the definition is specifically found to be needed and reasonable. This revision (as well as the revisions proposed by the Staff in its attached "Recommendations" section) do not appear to be substantial changes requiring an additional hearing.

CONCLUSIONS

1. That the Agency duly acquired and now has jurisdiction over the within proceeding.

2. That all relevant, legal and procedural requirements of statute and rule have been complied with.

3. That the Agency has documented its statutory authority to adopt the proposed rules.

4. That the Agency has demonstrated the need for and reasonableness of its proposed rules as hereinafter recommended for adoption with an affirmative presentation of facts.

RECOMMENDATION

It is hereby recommended that the proposed rules of the Pollution Control Agency be promulgated, approved and adopted after attention to the modifications suggested by the Findings.

Dated: June 6, 1979.

HOWARD L. KAIBEL, JR.
State Hearing Examiner

RECOMMENDATIONS

IT IS HEREBY RESPECTFULLY RECOMMENDED that the Minnesota Pollution Control Agency adopt proposed 6 MCAR §§4.8051-4.8052 and repeal Minn. Rules SW 51-61 as published in 3 S.R. 1716-1729 (March 12, 1979) with the following changes:

1. 3 S.R. 1717, Preamble, paragraph 3, should read:

The following rules for the control of livestock, poultry, and other animal ~~wastes~~ manures have been promulgated to provide protection against pollution caused by manure from domesticated animals. However, these rules recognize that animal manure often provides beneficial qualities to the soil and to the production of agricultural crops.

2. 3 S.R. 1717, Preamble, paragraph 5, should read:

These rules comply with the policy and purpose of the State of Minnesota in regard to the control of pollution as set forth in Minn. Stat. chs. 115 and 116 (1978). Specifically, these rules are promulgated in accordance with Minn. Stat. §116.07 (1978) and Minn. Stat. §115.03 (1978). Finally, these rules shall have the force and effect of law and shall supersede and replace Minn. Rules SW 51-55 (1971) and Minn. Rules SW 56-61 (1974) ~~upon filing with the Secretary of State~~ twenty days after its publication in the State Register.

3. 3 S.R. 1718, 6 MCAR §4.8051 B.4., should read:

4. "Animal Unit." A unit of measure used to compare differences in the production of animal manures that

employs as a standard the amount of manure produced on a regular basis by a slaughter steer or heifer. For purposes of this rule, the following equivalents shall apply:

Animal	Unit
one mature dairy cow	1.4 animal unit
one slaughter steer or heifer	1.0 animal unit
one horse	1.0 animal unit
one swine over 55 pounds	.4 animal unit
one duck	.2 animal unit
one sheep	.1 animal unit
one swine under 55 pounds	.05 animal unit
one turkey	.018 animal unit
one chicken	.01 animal unit

For animals not listed above, the ~~equivalent~~ number of animal units shall be defined as the average weight of the animal divided by 1,000 lbs.

4. 3 S.R. 1718, 6 MCAR §4.8051 B.5., should read:

5. "~~Certification~~ Certificate of Compliance." A letter from the Agency or the county feedlot pollution control officer to the owner of an animal feedlot stating that the feedlot meets Agency requirements.

5. 3 S.R. 1718, 6 MCAR §4.8051 B.6., should read:

6. "Change in Operation." An increase ~~in~~ beyond the permitted maximum number of animal units ~~which can be confined at the site~~, an increase in the number of animal units which are confined at an unpermitted animal feedlot

requiring a construction investment, or a change in the construction or operation of an animal feedlot that would affect the storage, handling, utilization, or disposal of animal manure.

6. 3 S.R. 1718, 6 MCAR §4.8051 B.7., should read:

7. "Corrective or Protective Measures." A practice, structure, condition, or combination thereof which prevents or reduces the discharge of pollutants from an animal ~~facility~~ feedlot to a level in conformity with Agency rules.

7. 3 S.R. 1718, 6 MCAR §4.8051 B.8., should read:

8. "County Feedlot Pollution Control Officer." A county employee or officer who is knowledgeable in agriculture and who is designated by the county board to receive and process animal feedlot permit applications.

8. 3 S.R. 1718, 6 MCAR §4.8051 B.11., should read:

11. ~~"Flood Plain."~~ "Floodplain." The areas adjoining a watercourse which have been or hereafter may be covered by a large flood known to have occurred generally in Minnesota and reasonably characteristic of what can be expected to occur on an average frequency in the magnitude of the 100 year recurrence interval.

9. 3 S.R. 1718, 6 MCAR §4.8051 B.12., should read:

12. "Interim Permit." A permit issued by the ~~Executive~~ Director ~~of the Agency~~ or the county feedlot pollution control officer which expires no longer than six months from the date of issue.

10. 3 S.R. 1718, 6 MCAR §4.8051 B.14., should read:

14. "New Animal Feedlot." An animal feedlot constructed and operated at a site where no animal feedlot existed previously or where ~~an~~ a pre-existing animal feedlot has been abandoned or unused for a period of five years or more.

11. 3 S.R. 1718, 6 MCAR §4.8051 B.16., should read:

16. "Owner." ~~A~~ All persons having possession, control, or title to ~~one or more~~ an animal feedlot~~s~~.

12. 3 S.R. 1718, 6 MCAR §4.8051 B.17., should read:

17. "Pasture~~s~~." Areas where grass or other growing plants are used for grazing and where the concentration of animals is such that a vegetation cover is maintained during the growing season except in the immediate vicinity of temporary supplemental feeding or watering devices.

13. 3 S.R. 1718, 6 MCAR §4.8051 B.19.a., should read:

a. An animal feedlot or manure storage area whose boundaries are located within ~~designated~~ shoreland or ~~flood plain~~ floodplain, or are located in an area draining directly to ~~either~~ a sinkhole or draining to an area with shallow soils overlying a fractured or cavernous rock, or are located within 100 feet of a water well, or

14. 3 S.R. 1719, 6 MCAR §4.8051 B.20.b., should read:

b. Land within 300 feet of a river or stream or the landward side of ~~flood plain~~ floodplain delineated by ordinance on such a river or stream, whichever is greater.

15. 3 S.R. 1719, 6 MCAR §4.8051 C.2., should read:

2. All vehicles used to transport animal manure on county, state and interstate highways or through municipalities shall be leakproof. Manure spreaders with endgates shall be in compliance with this provision provided the endgate works effectively to restrict leakage and the manure spreader is leakproof. This shall not apply to animal manure being hauled to fields adjacent to feedlot operations or fields divided by roadways provided the animal manure is for use as domestic fertilizer.

16. 3 S.R. 1719, 6 MCAR §4.8051 C.3., should read:

3. Animal manures, when utilized as domestic fertilizer, shall not be stored for longer than one year and shall be applied at rates not exceeding local agricultural crop nutrient requirements except where allowed by permit. Local agricultural crop nutrient requirements can be obtained at local Soil Conservation Service Offices or local Agricultural Extension Service Offices.

17. 3 S.R. 1719, 6 MCAR §4.8051 D.1.a., should read:

a. The owner of a proposed or existing animal ~~facility~~ feedlot for greater than 10 animal units shall ~~be required to~~ make application to the Director for a permit when any of the following conditions exist:

18. 3 S.R. 1719, 6 MCAR §4.8051 D.1.a.(2), should read:

(2) A change in operation of an existing animal feedlot is proposed; or

19. 3 S.R. 1719, 6 MCAR §4.8051 D.1.a.(4), should be omitted:

~~(4) An inspection by the Agency staff or a county feedlot pollution control officer determines that an existing animal feedlot creates or maintains a potential pollution hazard; or~~

20. 3 S.R. 1719, 6 MCAR §4.8051 D.1.a.(5), should be cited 6 MCAR §4.8051 D.1.a.(4).:

~~(5)~~ (4) A National Pollutant Discharge Elimination System (NPDES) permit application is required under state or federal rules and regulations.

21. 3 S.R. 1719, 6 MCAR §4.8051 D.1.b., should be added to read:

b. The owner of any animal feedlot shall be required to make an application for a permit when an inspection by the Agency staff or a county feedlot pollution control officer determines that the animal feedlot creates or maintains a potential pollution hazard.

22. 3 S.R. 1719, 6 MCAR §4.8051 D.1.b. should be cited 6 MCAR §4.8051 D.1.c.:

~~b.~~ c. The permit application shall include the following items:

23. 3 S.R. 1719, 6 MCAR §4.8051 D.1.c.(1), should read:

(1) A completed permit application form~~,~~ listing all owners and signed by ~~the~~ at least one of the owners, ~~which includes~~ including animal types, the maximum number of animalsof each type which can be confined at the animal feedlot, the location of ~~facilities~~ the animal feedlot, soil conditions, and hydrogeological conditions.

24. 3 S.R. 1719, 6 MCAR §4.8051 D.1.c.(3), should read:

(3) A manure management plan including manure handling and application techniques, acreage available for manure application and plans for any proposed manure storage structure. Any plans for manure storage structures of 500,000 gallons capacity or larger shall have been prepared or approved by a registered professional engineer or a qualified governmental employee. For purposes of this provision, a qualified governmental employee shall include a Soil Conservation Service employee or a county employee approved by the Agency.

25. 3 S.R. 1720, 6 MCAR §4.8051 D.1.d., should be added:

d. When more than one person is in possession, control or has title to a single animal feedlot, only one person needs to apply for an animal feedlot permit, however, the permit application must list all owners in accordance with 6 MCAR §4.8051 D.1.b.(1). All owners are responsible for compliance with these rules and permits or certificates of compliance issued pursuant to these rules.

26. 3 S.R. 1720, 6 MCAR §4.8051 D.2.a., should read:

a. No permit shall be required when the review of the application indicates that all animal manures are being used as domestic fertilizer and that a potential pollution hazard does not exist or that potential pollution hazards have been satisfactorily addressed by corrective or

protective measures. However, a certificate of compliance shall be obtained by the owner of such ~~a facility~~ an animal feedlot prior to commencing operation of the new feedlot ~~or~~, changing the operation of an existing feedlot or changing ownership of an existing feedlot.

27. 3 S.R. 1720, 6 MCAR §4.8051 D.2.b.(1), should read:

(1) An interim permit shall be issued by the Director when the potential pollution hazard will be corrected within six months of the date of application. When all necessary corrective and protective measures have been installed on a permitted animal feedlot, ~~the Director shall terminate~~ the permit shall terminate and ~~shall issue~~ a ~~certification~~ certificate of compliance shall be issued.

28. 3 S.R. 1720, 6 MCAR §4.8052 B.1.c.(1), should read:

(1) ~~Distribution of~~ Distribute permit application forms made available by the Director to those required to make application for the permit.

29. 3 S.R. 1721, 6 MCAR §4.8052 B.1.c.(3), should read:

(3) Receive and review completed application forms and conduct such inspections as necessary to determine if the proposed animal ~~facility~~ feedlot will comply with applicable state rules and regulations and applicable local ordinances.

30. 3 S.R. 1721, 6 MCAR §4.8052 B.1.c.(4), should read:

(4) Maintain a record of all correspondence and material relating to animal feedlot applications, ~~certifications~~ certificates of compliance, and interim permits issued by the county board.

31. 3 S.R. 1721, 6 MCAR §4.8052 B.2.a., should read:

a. For animal feedlots with less than 1,000 animal units where manure is used as a domestic fertilizer and with no potential pollution hazard, the county feedlot pollution control officer shall ~~certify~~ provide a certificate of compliance to the Agency and the applicant stating that the animal feedlots comply with all aspects of 6 MCAR §4.8051 and that no animal feedlot permit is required.

31. 3 S.R. 1721, 6 MCAR §4.8052 B.2.b., should read:

b. For animal feedlots of less than 300 animal units where manure is used as a domestic fertilizer and where all potential pollution hazards have been mitigated by protective or corrective measures the county feedlot pollution control officer shall ~~certify~~ provide a certificate of compliance to the Agency and to the applicant stating that the animal feedlots comply with 6 MCAR §4.8051 and that no animal feedlot permit is required.

32. 3 S.R. 1721, 6 MCAR §4.8052 B.2.c.(4), should read:

(4) Animal feedlots where manure is not used as domestic fertilizer; or

34. 3 S.R. 1721, 6 MCAR §4.8052 B.3., should read:

3. Any county board which has assumed responsibility for processing feedlot permit applications in accordance with 6 MCAR §4.8052 B.1., may issue, deny, modify, impose conditions upon or revoke interim permits for animal feedlots smaller than 300 animal units where animal manure is used as a domestic fertilizer and with a potential pollution hazard which will be mitigated by corrective or protective measures within six months of the date of the issuance of the interim animal feedlot permit ~~application~~. These permits shall be issued, denied, modified, have conditions imposed upon them or revoked in conformance with the following requirements:

35. 3 S.R. 1721, 6 MCAR §4.8052 B.3.a.(2), should read:

(2) The Director shall, after receipt of written notification of intent to issue an interim permit, review the draft interim permit within 15 days to determine compliance with applicable Agency rules and shall approve, suspend, modify, or reverse the issuance of the interim permit. If the Director approves issuance of the interim permit, the interim permit and a certificate for display shall be returned to the county for issuance to the operator. If the Director suspends, modifies or reverses the issuance of the interim permit, the applicant retains all rights of appeal set out in 6 MCAR §4.8052 C. If the Director fails to

act within 15 days after receipt of the draft interim permit from the county, the county may proceed to issue the interim permit.

36. 3 S.R. 1721, 6 MCAR §4.8052 B.3.b., should read:

b. In order for a county to modify or impose conditions upon a interim permit the county shall notify the Director in writing of its intention to modify or impose conditions upon an interim animal feedlot permit. Such notification must include a copy of the interim permit together with the intended modifications and conditions. The Director shall determine compliance with the provisions of applicable Agency rules and shall either approve, suspend, further modify or reverse the recommended modification or conditions within 15 days of receipt of the aforementioned notice of intent. The county shall be notified of said Agency action. The applicant retains all rights of appeal set out in 6 MCAR §4.8052 C. ~~If the Director fails to act within 15 days after the receipt of the draft interim permit from the county, the county may proceed to issue the interim permit.~~

37. 3 S.R. 1722, 6 MCAR §4.8052 B.3.b.(3), was cited incorrectly and shall be cited as 6 MCAR §4.8052 B.4.

38. 3 S.R. 1722, 6 MCAR §4.8052 B.4., B.5., B.6., and B.7. cites should be changed to correspond with change made in No. 36, supra.

Respectfully submitted,

Robert C. Moilanen
Special Assistant Attorney General

Counsel for Minnesota Pollution Control Agency Staff

Dated: May 9, 1979

STATE OF MINNESOTA

DEPARTMENT OF ADMINISTRATION

In the Matter of Proposed
Rules for Energy Conservation
Standards for Existing Residences.

STATEMENT OF NEED
AND REASONABLENESS

The need for the proposed rules was established in Minn. Stats. Section 116H.129, Subdivision 1 (1977 Supplement) as amended by Minnesota Laws 1978, c. 876, Section 2 which directed the Commissioner of Administration to promulgate minimum energy efficiency standards for existing residences.

An energy Conservations Standards Subcommittee of the Building Code Standards Committee was selected by the Director of the Building Code Division and the Commissioner of Administration to assist in promulgating the proposed standards. The subcommittee consists of 19 persons of diverse professions and experience representing an extensive range of expertise in energy conservation aspects of construction. (See attached listing of members) The Subcommittee considered a variety of proposed energy conservation measures as possible areas for standards. Several criteria were used in selecting the standards:

1. Ability to determine compliance through visual inspection - The choice of this criterion is justified by the statutory requirement that:

> The standards shall be economically feasible in that the resultant savings in energy procurement costs,..., will exceed the cost of the energy conserving requirements amortized over the five-year period subsequent to the incurring such cost.

Minn. Stat. § 116H.129 subd. 1 (1978)

The costs resulting from the need to remove a portion of the structure or to use expensive measuring equipment, such as infrared imaging equipment, would add to the cost of the energy conservation measure such that it would be unlikely to pay back in less than five years.

2. Cost-effectiveness - The choice of this criterion is based on the statute cited above requiring less than a five-year payback. The Subcommittee interpreted cost-effectiveness to mean that the energy conservation measures would meet the test of economic feasibility in the majority of cases. The determination of the cost-effectiveness of the various measures was based on the combined judgement and experience of the Subcommittee.

3. Involve a modification to the building envelope and not the mechanical systems - The choice of this criterion is based on the fast modification to existing residential heating and cooling systems still undergoing widespread research. Retrofit equipment and trained personnel are not readily available and improper installation by an untrained person could be potentially very hazardous. Compliance with a standard for mechanical systems cannot be readily determined by visual inspection but instead requires a highly trained individual to identify correctly economically feasible system alterations. Preliminary results from current research indicates, however, that modifications to heating, cooling, and ventilating can result in substantial energy savings which in many cases would pay back in less than five years, thus, this should remain an area for future consideration.

Modifications to the building envelope, on the other hand, are well-known and widely practiced. Information on the resultant savings is readily available. It is, therefore, an appropriate area for energy efficiency standards.

Other important factors were considered by the Subcommittee in the development of the standards and calculating procedures. It was felt that, in general, the standards and calculating procedures should be simple enough to be readily understood by the typical homeowner. The justification for this is that the law has its broadest impact on the homeowner through the energy disclosure program. Because this program is informational only, and may be waived by the buyer, it was felt that standards and procedures which were easily understood would be least likely to be waived and would have the greatest educational impact on both the buyer and seller. Such simplicity is also appropriate for rental property where two-thirds of the landlords own five units or less and are not likely to have expertise significantly beyond that of the homeowner.

A further consideration was that the standards and calculating procedures work together such that each building may be analyzed individually. The need for this approach arises from the statutory definition of "applicable energy efficiency standards":

> (d) "Applicable energy efficient standards" means those standards established under Subdivision 1 which are not shown to be economically infeasible for the building in question.
>
> Minn. Stat. § 116H.129 subd. 2 (d) (1978)

Thus, each standard is accompanied by an energy saving formula for determining the savings resulting from retrofit. The energy savings are then converted to dollars and the payback period determined in order to test for economic feasibility.

A final consideration in development of the rules was whether the tables of data and other values used in the formulas should be part of the rules themselves or provided to the evaluator in some other way. The Department of Administration, with the concurrence of the Minnesota Energy Agency, determined that inclusion of the various data in the rules was not appropriate but instead, that data should be printed in the state register. The justification for this determination is based on a similar requirement in the statutes that:

> current and projected average residential energy costs in Minnesota as certified by the director in the state register
>
> Minn. Stat. § 116H.129 subd. 1 (1978)

The legislation suggests that data necessary for the actual calculation of energy savings and economic feasibility need not be part of the rules but instead, should be printed in the state register. Additional justification for not including the tables in the rules arises from the fact that the data in the tables is subject to change and refinement. Price variables, for example, will change periodically and this data should be continually updated. Values for infiltration, furnace efficiency, and others are undergoing continued research and will be updated as results become available. The best current data available has been appended to this Statement of Need and Reasonableness for public review. The tables are for informational purposes only.

Don Pates, Director, and Sivert Hendrickson, Section Chief, Code Consultants, of the Building Code Division, John Armstrong, Assistant Director, Conservation Section, Robert Gish, Building Technical Services Manager, Jesus Dumagan, Economic Analyst, and Lynn Olsson, Energy Audit Program Coordinator, of the Minnesota Energy Agency will appear in behalf of the proposed rules at the hearing. They will testify regarding the need for and reasonableness of the proposed rules. The substance of the testimony is set forth herein.

The following will be submitted as documentation in support of the proposed rules: ASHRAE Handbook and Product Directory 1977 Fundamentals and ASHRAE Handbook and Product Directory 1976 Systems.

The standards have been prepared jointly by the Energy Conservation Standards Subcommittee, the Minnesota Energy Agency, and the Building Code Division. The Senate Committee on Energy and Housing and the House Committee on Environment and Natural Resources were consulted in preparation of the Standards.

The following is the evidence and argument which supports the need for and the reasonableness of the proposed rules:

2MCAR S 1.16201. Authorization. These porposed rules are authorized and promulgated as directed by the Minnesota Legislature pursuant to Minn. Stats. Section 116H.129, Subd. 1, (1977 Supplement) as amended by Minnesota Laws 1978, c. 786, Section 2.

2MCAR S 1.16202. Enforcement. For a total understanding of the implication of the proposed rules it is crucial to cite the enforcement provisions. Testimony at the previous hearing on January 5, 1978, indicated that the rules must include a mechanism for enforcement.

2MCAR S 1.16203. Purpose. The proposed rules are prepared to provide a minimum level of energy savings (conservation) in existing residences and thereby help to alleviate potential shortages of critical fuel supplies.

2MCAR S 1.16204. Scope. The scope of the proposed rules addresses two major areas of heat loss from residences via infiltration and thermal transmittance through the exterior walls and roofs of buildings. Those in the design profession, construction industry, and all others associated with or trained in energy conservation practices, are aware that heat losses from residences occur thereby. Because the statute requires that the standards be economically feasible the proposed rules also include the methods of calculating energy savings and determination of economic feasibility. The methods of calculation therein are basic ones, and do not require a high degree of expertise in mathematical disciplines.

2MCAR S 1.16205. Definitions. The definitions contained in this section are taken from the statute, the Minnesota Building Code, and American Society of Heating, Refrigerating and Air-Conditioning Engineers, Inc. publications or were prepared by the staff of the Building Code Division and represent the concensus of the Subcommittee.

The definitions from the statute are included so that persons affected by these rules who do not have access to the statute, may clearly understand the legislative intent and purpose of the rules, therefore, it is crucial that definitions from the statute be included. Terms which have common meanings are defined herein for clarification as to specific application to the proposed standards. Definitions obtained from the Minnesota Building Code and ASHRAE publications are used because they are nationally recognized and used extensively by those persons involved in energy conservation aspects of construction.

The definition of "U Value" is included, although it is not used in the Standards, since it is essential in calculating energy savings and economic feasibility.

2MCAR S 1.16206. Minimum Energy Efficiency Standards.

1. and 2. These standards are needed because weatherstripping and caulking will help prevent winds from infiltrating through cracks around windows and doors or openings through any other portion of the building evelope. Infiltration of air creates a need for excess use of fuels to heat or cool the air that has entered thereby. Weatherstripping and caulking can be readily achieved with various materials easily obtained from building supply centers.

3. This standard is needed in that fireplaces or fireplace stoves without positive shut-off devices, when not in use, are a major source of heat loss because the warm air in the residence escapes through the chimney or flue to the exterior via natural convection currents. Positive shut-off devices are readily obtainable and can be easily installed in most fireplaces and fireplace stoves.

4. This standard is needed in that heat losses via thermal transmittance through non-insulated, or under-insulated attics is a major source of loss in existing residences. It has not been common construction practice in Minnesota prior to the early 1970's to insulate attics to this minimum standard. Studies and energy conservation programs conducted by public utilities in Minnesota verify that installation of attic insulation is an effective energy conserving measure.

5. This standard is needed because it has not been common construction practice in Minnesota, prior to January 1, 1976, to insulate rim joist areas of dwellings. Accessible rim joists can be insulated very easily, thus reducing heat loss through that area.

6. This standard is needed because it has not been common construction practice to insulate foundation walls above grade. In some cases floors and walls adjacent to unheated spaces have not been insulated. Accessible floors and walls can be readily insulated with a minimum cost and effort to achieve savings in energy use.

7. A major source of heat loss via thermal transmittance (U Value) is through single glazed windows. Installation of storm windows will reduce this loss, with the resultant energy savings. This is a reasonable method of conserving energy.

8. Doors which are not insulated, and not provided with storm doors are a source of heat loss via thermal transmittance (U Value). This standard is needed to provide for energy savings by installation of storm doors. Storm doors are readily available to achieve compliance with the standard.

2 MCAR S 1.16207. Procedures for Calculating Energy Savings and Determining Economic Feasibility.

This section of the proposed rules contains the overall general methodology for determining whether or not each standard meets the economic feasibility criteria established by the legislation. The determination must be carried out for each standard in a manner specific to each residence, i.e., on a case by case basis.

The justification and reasonableness of this section can be addressed and clarified by the following set of questions and answers.

1. Why is the procedure required?
   (a) The legislation directs that each standard meet the test of economic feasibility. This determination can only be met by this procedure for calculating energy savings and determining economic feasibility.

2. What is the procedure?
   (a) The procedure is a step by step process outlined in detail in the proposed rules. Sections A through H show the logical sequence of calculations to determine whether or not a given standard is applicable to a specific residence. The procedure involves steps, simplified and summarized as follows.

      1. First, for each standard and specific residence, calculate the annual energy savings resulting from the improvement to meet the given standard, by using the equations outlined in 2MCAR 1.16208.

      2. Second, calculate the payback period resulting from the improvement to meet the given standard, by using the equations outlined in 2 MCAR 1.16209.

      3. Third, compare the payback period for the given standard with the 5-year economic feasibility requirement. If the payback period is less than the requirement then the given standard is applicable to the specific residence.

The procedure uses simple, yet accurate equations for calculating energy savings and determining economic feasibility.

3. Why must the procedure be applied on a case by case basis, for each specific residence?
   (a) The procedure must be applied to each specific residence because of the uniqueness of each residence. The energy savings and economics vary, depending on locations within the state, including weather differences, the type of fuel used, the heating system type, fuel cost and heat loss savings. Each of these variables is accounted for in the equations. For example, the weather differences are accounted for by the use of degree days, which

are derived from outdoor temperature during the heating season, and therefore directly correlate with energy usage. Degree Day quantities vary from about 8,000 in the southern part of the state to about 10,000 in the northern part of the state. Since the amount of energy that can be saved from any improvement will be affected by this degree day variation, the variation is taken into account by the calculation equations. Similarly the other variations specific to each residence are taken into account by the use of tables of values for each variable.

4. Why must the procedure be applied for each of the eight standards on a given residence?

   (a) The procedure must be applied for each standard on an individual basis for a given residence. The energy savings and economics vary depending on the proposed improvement to meet each standard including the amount of heat loss savings and the cost of the improvement. For example, the heat loss savings and the improvement costs are totally different for installing weatherstripping or installing storm doors, therefore the procedure must be applied for each of the eight standards independently. Each variable which affects heat loss savings is accounted for in individualized design heat loss equations for each of the eight standards. Tables of different values are presented in the attachments.

2 MCAR S 1.16208. General Energy Savings Equation

The general energy savings equation (A) is applicable to each of the eight standards. It is used for calculating energy savings using all the variables which are unique to both a specific residence and any of the eight standards. It was derived from the 1976 ASHRAE Systems Handbook which is a standard reference for the heating and ventilation industry.

The equation incorporates almost all the effects which make a residence unique. Among these are weather effects in the form of degree days for any given location; heating system efficiency for the type used in a specific residence; the heat content of the specific fuel type used; a design heat loss factor which is unique to both each separate standard and specific residence; and a derived multiplication factor which is a constant for the state of Minnesota.

The equation is based on the modified degree-day method and provides a simple, and yet accurate way to estimate annual energy savings for a energy improvement.

Derivation of the Constant Multiplication Factor 21.7

The general energy savings equation includes a multiplication constant of 21.7 which was derived for Minnesota from several tables in the 1976 ASHRAE Systems Handbook. The derivation is as follows.

$$\text{Factor} = C_D \times C_F \times 24 \frac{\text{Hours}}{\text{Day}}$$

Factor = 0.60 x 1.51 x 24.

Factor = 21.7

where

C_D = 0.60, a value selected form page 43.8 of ASHRAE to correct for the effects of solar heat gain, outdoor temperature and heat generation from appliances, etc.

and

C_F = 1.51, a value selected from page 43.8 of ASHRAE to correct for the effects of part load operation of the heating system, based on assumed 15% oversizing which is the maximun allowed by the Minnesota Energy Code.

The factor of 21.7 is a reasonable approximation of actual effects.

General Equation Variables - Degree Days (D), System Efficiency (N), Heat Content (V).

The general energy savings equation includes other variables such as degree days (D), System Efficiency (N) and the Heat Content (V) of the fuel. Each of these variables provides the general equation with a great deal of flexibility which allows the uniqueness of a specific residence to be taken in consideration. Tables of values for each of these variables are provided as attachments.

The Design Heat Loss Difference Variable (ΔH)

The general energy savings equation includes a design heat loss difference variable (ΔH) which allows the general equation to be used for calculating energy savings for any one of the eight standards. Sections A through H of 2MCAR S 1.16208 describe the method of calculating ΔH for each of the eight standards.

Equations for Calculating ΔH for Each of the Eight Standards.

Each standard can be placed in one of two categories of heat loss, either infiltration or thermal transmission. The infiltration group includes standards 1, 2 and 3, while the transmission group includes standards 4,5,6,7 and 8.

The Infiltration Group - Standards 1, 2 and 3.

The infiltration group uses a ΔH equation in the form of a constant 1.08 times the difference in air leakage (infiltration) due to the energy improvement.

The constant 1.08 was derived from the 1977 ASHRAE Handbook in the following way.

$$\text{Factor} = d \times c_p \times 60. \frac{\text{Minutes}}{\text{Hour}}$$

$$= .075 \times .24 \times 60$$

$$\boxed{\text{Factor} = 1.08}$$

where

$d = .075 \frac{\text{lbs.}}{\text{ft.}^3}$, a standard value for the density of air, taken from the ASHRAE Handbook.

and

$c_p = .24 \frac{\text{Btu}}{\text{lb°F}}$, a standard value for the specific heat of air, taken from the ASHRAE Handbook.

The constant factor of 1.08 is a standard accepted value.

Tables of values for air infiltration leakages for each of the standards 1, 2, and 3 have been developed from the ASHRAE Handbooks and are found in the attachments.

The Thermal Transmission Group - Standards 4,5,6,7 and 8.

The transmission group uses equations of the form as given in the proposed rules. These are standard heat loss difference equations and have been taken directly from the ASHRAE Handbook. Tables of R-values and U-values are attached for each of the standards in this group.

INTRODUCTION

I. Elements of Payback Calculations

I-A. Present Value of Future Dollars of Energy Savings

I-B. Present Valuation of the Costs of Energy-Saving Improvements: Exclusion of Future Interest Costs.

II. Alternative Payback Equations

II-A. "Adjusted" Payback: The case where the Energy Price Inflation Rate does not Equal the Discount Rate

II-B. "Simple" Payback: The case where the Energy Price Inflation Rate Equals the Discount Rate

II-C. Comparison Between "Adjusted" and "Simple" Paybacks

III. Conclusion: "Simple" Payback for Proposed Rules

2MCAR§1.16209. General Payback Equation

The payback equation is given in the proposed rules as follows:

Equation B:

$$T = \frac{C}{(P) \times (\Delta E)}$$

where

T = payback period in years;

C = the total cost of purchasing and installing energy saving improvements minus applicable federal and/or state tax credits, grants or subsidies;

P = price per unit of energy, this unit being the same as the unit of annual energy savings, ΔE. The appropriate values of P shall be those certified by the director of the Minnesota Energy Agency in the State Register, pursuant to Minn. Stat. Section 116H.129, Subd. 1 (1977 Supplement), as amended by Minn. Laws 1978, c. 786, Section 2;

ΔE = The quantity of annual energy savings in the appropriate energy units, e.g., hundreds of cubic feet of natural gas, gallons of fuel oil, or kilowatt-hours of electricity, as calculated for each of the energy efficiency standards.

The statutory definition of economic feasibility is given in Minn. Stat., Section 116H.219, Subd. 1 (1977 Supplement), as amended by Minn. Laws 1978, c. 786, Section 2. The proposed rules interpret this statutory definition to be satisfied whenever Equation B yields a payback of less than five years for anyone of the proposed minimum energy efficiency standards.

The section of the statutes cited above requires that in the determination of economic feasibility, the calculation must take into account "reasonable inflation and interest factors." Yet Equation B appears not to have considered these factors. It shall be demonstrated, however, that in deriving this equation inflation and interest are initially taken into account. But in view of a short payback of less than five years, the assumption of equally offsetting inflation and interest factors can be justified. The end result is Equation B, the justification for which is detailed below.

I. Elements of Payback Calculations

The original dollar values that enter into payback calculations do not have

the same time dimensions. On the one hand, the dollars of energy savings are future receivables, defined as annual values for purposes of the proposed rules. On the other hand, the costs of an energy-saving improvement include both present purchases and installation costs, future maintenance costs, if any, and future interest costs on the energy-saving investment.

A payback calculation determines how long it takes for the costs of an energy-saving improvement to be recovered by the corresponding savings. (For example, an improvement that costs $100 and that generates $25 of annual savings has a simple payback of 4 years.) For the purpose of determining payback, future dollars on both the savings and costs sides should be converted to present values. The reason is that, in view of the time value of money, a dollar in hand now does not have the same value as a dollar receivable in the future. For instance, in the normal case where the interest rate is positive, a dollar today is worth more than a dollar a year or more hence. Conversely, a future dollar is worth less today.

Therefore, unless future dollars of both savings and costs are converted into present values, their units are not comparable. Since the comparison of savings and costs is the reason for payback calculations, present value conversions of these dollar values is simply necessary.

I-A. Present Value of Future dollars of Energy Savings

The quantity of annual energy savings, ΔE, is calculated on the basis of purely engineering considerations. Thus, if everything else remains the same (like energy-related living habits) except that an energy-saving improvement has been done, ΔE, may be interpreted as the decrease in energy consumption below the level attained before compliance with a specific standard.

On the contrary, if [illegible]ing habits change after compli[illegible]e such that energy consumption increased, the calculation implies that the increased level of consumption should have been higher by as much as ΔE had there been no compliance. In general, no matter what the level is after compliance, it is lower by the quantity ΔE because of compliance.

The preceding discussion warrants the interpretation that ΔE is a permanent reduction of future energy consumption levels below those correspondingly attained without compliance. For analytical purposes, we can therefore treat ΔE as a constant, i.e., the same quantity of energy savings attained in each future year subsequent to compliance with a specific standard.

Given that the quantity of energy savings remains the same per year, the dollar value of annual savings will increase at the same rate as the annual price inflation rate of the energy being saved. Thus, future dollar values of energy savings get larger under inflationary conditions. In determining the economic feasibility of each standard, these ever enlarging future dollar savings should be converted to present values by using an appropriate discount rate.

At this juncture, it may help to clarify the concepts of inflation and discount rates with an example. Suppose that an energy-saving improvement is estimated to save $50 worth of natural gas annually, excepting inflation. This calculation is based on so much savings in BTU's of natural gas valued at the price obtaining at the time of calculation. These BTU's savings are assumed constant henceforth so that the dollar value will increase at the same rate as the price inflation rate. In this natural gas example, the annual price inflation rate is estimated to be 10.7% (4.7% real price inflation rate plus 6.0% general inflation rate).

Thus,

$$(\$50) + .107(\$50) = (\$50)(1 + .107) = \$55.35$$

= dollar savings at the end of the first year.

At the beginning of the second year (end of the first year), $55.35 will grow by 10.7% so that

$$(\$55.35) + .107(\$55.35) = (\$55.35)(1 + .107)$$

$$= (\$50)(1 + .107)(1 + .107)$$

$$= (\$50)(1 + .107)^2$$

= dollar savings at the end of the second year.

A pattern should be obvious from the above example. From

$(\$50)(1 + .107)$ = dollar savings at the end of the first year;

$(\$50)(1 + .107)^2$ = dollar savings at the end of the second year;

it may be inferred that, in general,

$(\$50)\ (1 + .107)^t$ = dollar savings at the end of the tth year

where t, used as an exponent, refers to some future year.

In the calculation of payback, the sum of these savings is the value to be compared to costs. Note, however, that since the above savings are each receivable at different points in the future each one should be converted to present value before summation. Since these present values have the same time dimension (of the "present") they can be added as the units are comparable.

To illustrate the concept of discounting, consider the following examples. If $100 if borrowed now at the rate of, say, 11% compounded once a year, then

$$(\$100) + .11(\$100) = (\$100)(1 + .11) = \$111$$

The amount \$111 is the payment at the end of the first year for a \$100 borrowed now at 11%. If instead it was payable at the end of the second year, the payment would be

$$(\$111) + .11(\$111) = (\$111)(1 + .11)$$
$$= (\$100)(1 + .11)(1 + .11)$$
$$= (\$100)(1 + .11)^2 = \$123.21$$

Clearly,

$$\$100 = \frac{\$111}{(1 + .11)} = \text{present value of \$111 payable (receivable) at the end of the first year, discounted at 11\% annually;}$$

$$\$100 = \frac{\$123.21}{(1 + .11)^2} = \text{present value of \$123.21 payable (receivable) at the end of the second year, discounted at 11\% annually.}$$

The logic should be clear that if a person expects to pay (receive) \$X at the end of the $t^{\underline{th}}$ year (or after t years) at a discount rate of 100 R % (R is in decimal), its present value \$ Y is

$$\$\ Y = \frac{\$\ X}{(1 + R)^t}$$

The reason is simple. Only \$ Y need to be deposited now (present value) at the rate 100 R % such that after t years exactly \$ X is obtained.

It may be noted from the above example that the interest rate and the discount rate are used as if they are different faces of the same coin. Such in fact is the case. The interest rate is used to determine the future value of present dollars whereas the discount rate is used to determine the present value of future dollars. Thus, in payback calculations, the interest rate used to determine the future interest cost on the loan to finance an energy-saving improvement should also be used as the discount rate to determine the present value of future dollars of energy savings.

In the earlier example on savings of natural gas, if 11% is the interest rate on the loan used to pay for the energy-saving improvement, then

$$(\$50)\left(\frac{1 + .107}{1 + .11}\right) = \text{present value of dollar savings realized at the end of the first year;}$$

$$(\$50)\left(\frac{1 + .107}{1 + .11}\right)^2 = \text{present value of dollar savings realized at the end of the second year;}$$

and, in general,

$$(\$50)\left(\frac{1 + .107}{1 + .11}\right)^t = \text{present value of dollar savings realized at the end of the } t^{\text{th}} \text{ year.}$$

Since all the above are in terms of present values, i.e., the same time dimension, they could be added. This yields, if there are t = 1, 2, ..., (T - 1), T years,

$$(\$50)\left[\left(\frac{1+.107}{1+.11}\right)+\left(\frac{1+.107}{1+.11}\right)^2+\cdots+\left(\frac{1+.107}{1+.11}\right)^{T-1}+\left(\frac{1+.107}{1+.11}\right)^T\right].$$

This expression can be written more compactly as,

$$(\$50)\sum_{t=1}^{T}\left(\frac{1+.107}{1+.11}\right)^{t}$$

= present value sum of future dollars of energy savings for all years t = 1, 2, ..., T, given an initial savings estimate of $50 annually, an annual energy price inflation rate of 10.7% and an annual discount rate (interest rate) of 11%.

For the sake of generality symbols could be substituted for the above numbers. For example, $50 is actually a particular value for (P) X (ΔE). Also, .107 or 10.7% is a value of a more general variable that we may denote as 100 I % (I in decimal) for constant annual energy price inflation rate. Moreover, .11 or 11% is also a value of a more general variable, say, 100 R % (R in decimal) for constant annual discount rate. Using these symbols,

$$(P)\times(\Delta E)\times\left(\frac{1+I}{1+R}\right)$$

= present value of first year dollars of energy savings realized at the end of year 1;

$$(P)\times(\Delta E)\times\left(\frac{1+I}{1+R}\right)^{2}$$

= present value of second year dollars of energy savings realized at the end of year 2;

For any year t,

$$(P)\times(\Delta E)\times\left(\frac{1+I}{1+R}\right)^{t}$$

= present value of tth year dollars of energy savings realized at the end of year t.

The sum of the above present values for all years 1, ..., T may be given as

$$(P) \times (\Delta E) \times \left[\left(\frac{1+I}{1+R}\right) + \left(\frac{1+I}{1+R}\right)^2 + \cdots + \left(\frac{1+I}{1+R}\right)^{T-1} + \left(\frac{1+I}{1+R}\right)^T \right] .$$

To avoid confusion, the dots ... signify standard mathematical notation to indicate that there are terms in the summation that we cannot immediately identify simply because we consider T as unknown, where T is the exponent of the last term in the summation. For example, if T = 5, the only missing term is $\left(\frac{1+I}{1+R}\right)^3$. A more compact way of writing the preceding expression is

$$(P) \times (\Delta E) \times \sum_{t=1}^{T} \left(\frac{1+I}{1+R}\right)^t = \text{present value sum of future dollars of energy savings}$$

for all years t = 1, 2, ..., T, given an initial estimate (P) X (ΔE) of annual energy savings, a constant annual energy price inflation rate of 100 I % (I in decimal) and a constant annual discount rate of 100 R % (R in decimal). Note that sigma, Σ is the mathematical notation for summation.

I-B. Present Valuation of the Costs of Energy-Saving Improvements: Exclusion of Future Interest Costs.

A present value expression for future dollars of energy savings has thus far been derived. It remains for us to define the other side of the payback calculation, which is the present value expression for all present and future costs of an energy-saving improvement. In general, these costs consist of (a) the present cost of purchasing and installing the energy-saving improvements; (b) the future interest cost (or opportunity cost) of cost component (a); and (c) recurring maintenance costs after the improvement is in place. However,

an examination of the proposed minimum energy efficiency standards shows that only components (a) and (b) above are relevant inasmuch as maintenance costs could be assumed to be zero.

It will be argued shortly that in the calculation of paybacks, the total cost component should not include future interest costs of the principal amount involved. In the context of a loan where total payments equal the principal loaned plus interest payments, the present value is simply equal to the principal amount. The following examples will help to clarify this contention.

Suppose that $150 is spent on energy-saving improvements. Assume that this amount is borrowed. Consider now two illustrative cases by which the loan is repaid:

(i) the loan is paid in one lump-sum payment at the end of 2 years at 11% interest rate compounded once a year.

In this case,

$$(\$150) + .11(\$150) = (\$150)(1 + .11) = \$166.50.$$

The amount $166.50 is the amount to be paid if the loan is repaid in lump-sum after one year. However, after two years, the lump-sum payment becomes

$$\begin{aligned}(\$166.50) + .11(\$166.50) &= (\$166.50)(1 + .11) \\ &= (\$150)(1 + .11)(1 + .11) \\ &= (\$150)(1 + .11)^2 = \$184.815\end{aligned}$$

Clearly, $184.815 = $150.00 + $34.815 so that the interest cost is $34.815 after two years.

In the previous example, one may be tempted to say that the energy-saving improvement has a total cost of $184.815. This, however, is the total cost after two years or at the end of the second year, not the present cost. The present cost is simply future cost discounted to the present. In this case,

$$\text{Present Cost} = \frac{\$184.815}{(1+.11)^2} = \frac{(\$150)(1+.11)^2}{(1+.11)^2}$$

$$= \$150$$

The preceding example applies more generally. If a sum of $Z is borrowed at an annual rate of 100 R % interest compounded once yearly, the lump-sum payment for both principal and interest charges at the end of t years is

$$(\$Z)(1 + R)^t.$$

The present value of this lump-sum payment is, of course, its discounted value:

$$\text{Present Value} = \frac{(\$Z)(1+R)^t}{(1+R)^t} = \$Z.$$

That is, the present value of a loan is the principal amount borrowed. This follows from the fact that the interest rate and the discount rate are the same.

Consider now an alternative payment plan, the case where

(ii) The loan is repaid in uniform periodic payments, say monthly over a number of years.

Given the same loan of $150 at 11% annual interest rate, suppose that this loan is repaid monthly for 12 months. What is the uniform monthly payment when 1/12

of 11% is applied monthly? Letting $U be the uniform monthly amount paid at the end of each month, the following formula may be used:

$$\$150 = (\$U) \times \sum_{m=1}^{12} \left(\frac{1}{1+.11/12}\right)^m$$

where m is a month index used as an exponent. It can be shown that

$$\sum_{m=1}^{12} \left(\frac{1}{1+.11/12}\right)^m = \left[\frac{1-\left(\frac{1}{1+.11/12}\right)^{12}}{.11/12}\right]$$

$$= \frac{1-.89628}{.009167} = 11.3145 .$$

therefore,

$$\$U = \frac{\$150}{11.3145} = \$13.25 = \text{uniform monthly payment for 12 months.}$$

It follows that the total amount paid after 12 months is ($13.25) x 12 = $159

In the above example, the cost of an energy-saving improvement for which $150 was borrowed is not the $159 paid after 12 months. Since the relevant cost concept is present cost, the relevant amount is $150. Notice that $150 is the present value sum of $13.25 paid at the end of each month for 12 months, discounted at a rate of 11%/12 per month.

The preceding example is an application of a uniform monthly payment formula.

$$\$L = (\$U) \times \sum_{m=1}^{12T} \left(\frac{1}{1 + R/12} \right)^m$$

where

$\$L$ = present amount borrowed;

$\$U$ = uniform monthly payment at the end of each month;

100 R % (R in decimal) = annual rate of interest 1/12 of which is applied monthly;

m = month index used as exponent;

$12T$ = number of months, T being the number of years during which the amount borrowed is being repaid.

The above formula can be rewritten as

$$\$L = (\$U) \times \left[\frac{1 - \left(\frac{1}{1 + R/12} \right)^{12T}}{R/12} \right].$$

As a further application, to show that present valuation excludes future interest, consider the uniform montly amortization for a home mortgage. Suppose that one buys a house worth $50,000 and pays a down payment of $8,000. Moreover, suppose a mortgage for the difference of $42,000 is contracted at 9.75% annual interest rate for 30 years. Thus,

$\$L$ = $42,000

R = .0975

$12T$ = 12 x 30 = 360 months.

Therefore,

$$\$42,000 = (\$U) \times \left[\frac{1 - \left(\frac{1}{1 + .0975/12}\right)^{360}}{.0975/12}\right].$$

This yields

$$\$42,000 = (\$U) \times 116.3935$$

so that the uniform monthly payment at the end of each month for 360 months or 30 years is

$$\$U = \frac{\$42,000}{116.3935} = \$360.845.$$

The total payments after 360 months or 30 years is, therefore, \$360.845 x 360 = \$129,904.20 which implies that the total interest cost paid over 30 years is (\$129,904.20 - \$42,000) or \$87,904.20.

In the above example, the present value of the house at the time of the mortgage contract is only \$50,000 which is the downpayment of \$8,000 plus \$42,000 of mortgage loan. It is obviously wrong to claim that the present value of the house is \$50,000 (purchase cost) plus the interest cost of \$87,904.20 on the mortgage.

II. Alternative Payback Equations

The payback period is essentially the answer to the following question:

> How much time should elapse such that the sum of the present values of dollars of energy saved equals the present value (cost) of the improvement required to generate these savings?

Put algebraically, the payback period is the number of years, T, that is solved from the equality

$$(P) \times (\Delta E) \times \sum_{t=1}^{T} \left(\frac{1+I}{1+R} \right)^{t} = C$$

where P, ΔE and C are as defined in the proposed rules. The symbol I is for the constant annual energy price inflation rate of 100 I % (I is in decimal). Also, the symbol R stands for the constant annual discount (interest) rate of 100 R % (R is in decimal). The symbol t, used as an exponent, is a year index, e.g., t = 1 is for the first year, t = 2 is for the second year, etc. Thus, sigma $\sum$ is a summation over all years from 1 to T.

Recall that the left-hand side of the equality represents the present value sum of future dollars of energy savings. The right-hand side represents the present cost of the energy-saving improvement required to generate the left-hand savings. In arriving at these dollar measurements, the procedure is in keeping with the statutory provision to include inflation and interest factors. That this so is manifested by the appearance of the energy price inflation rate, I and of the discount rate or interest rate, R, on the left-hand side. The exclusion of interest costs in the right-hand side, it should be noted, is not from outright neglect but rather a logical result of the conversion of future cost to its present value equivalent. As previously shown, by using the same interest rate also as the discount rate, the present value of the principal plus future interest cost of a loan is the principal amount itself. Therefore, it is not the case that interest factors are at the outset neglected but that in the end these factors logically cancel out.

II-A. "Adjusted" Payback: The case where the Energy Price Inflation Rate does not Equal the Discount Rate

In the case where $I \neq R$, it may be verified that

$$\sum_{t=1}^{T} \left(\frac{1+I}{1+R}\right)^{t} = \left(\frac{1+I}{1+R}\right) \times \left[\frac{1-\left(\frac{1+I}{1+R}\right)^{T}}{1-\left(\frac{1+I}{1+R}\right)}\right].$$

It follows that

$$(P) \times (\Delta E) \times \sum_{t=1}^{T} \left(\frac{1+I}{1+R}\right)^{t} = C$$

becomes

$$(P) \times (\Delta E) \times \left(\frac{1+I}{1+R}\right) \times \left[\frac{1-\left(\frac{1+I}{1+R}\right)^{T}}{1-\left(\frac{1+I}{1+R}\right)}\right] = C.$$

By rearranging terms, the above yields

$$1-\left(\frac{1+I}{1+R}\right)^{T} = \frac{C}{(P) \times (\Delta E)} \times \left[\frac{1-\left(\frac{1+I}{1+R}\right)}{\left(\frac{1+I}{1+R}\right)}\right]$$

from which

$$\left(\frac{1+I}{1+R}\right)^{T} = 1 + \frac{C}{(P)\times(\Delta E)} \times \left[\frac{\left(\frac{1+I}{1+R}\right)-1}{\left(\frac{1+I}{1+R}\right)}\right]$$

Letting T_a be the "adjusted" payback solution for T, we obtain from above

$$T_a = \frac{1}{\log\left(\frac{1+I}{1+R}\right)} \times \log\left\{1 + \frac{C}{(P)\times(\Delta E)} \times \left[\frac{\left(\frac{1+I}{1+R}\right)-1}{\left(\frac{1+I}{1+R}\right)}\right]\right\}.$$

where log stands for common logarithmns or logarithmns to the base 10.

II-B "Simple" Payback: The case where the Energy Price Inflation Rate Equals the Discount Rate

In the case where I = R, it follows that

$$\sum_{t=1}^{T} \left(\frac{1+I}{1+R}\right)^{t} = T .$$

Hence,

$$(P)\times(\Delta E)\times\sum_{t=1}^{T}\left(\frac{1+I}{1+R}\right)^{t} = C$$

becomes

$$(P)\times(\Delta E)\times T = C .$$

Letting T_s be the "simple" payback solution for T, we obtain from above,

$$T_s = \frac{C}{(P) \times (\Delta E)} \quad .$$

This "simple" payback equation is the "general payback equation" (Equation B) of the proposed rules. It may be noted in passing that the use of the word "general" appears unwarranted in view of the fact that the above payback equation follows only for the case where I = R which does not hold in general. Perhaps, the word "general" refers to the application of the same "simple" payback equation to <u>all</u> of the eight minimum energy efficiency standards in the proposed rules.

II-C Comparison Between "Adjusted" and "Simple" Paybacks

From the equations for "adjusted" payback, T_a, and for "simple" payback T_s, it is obvious that the algebraic relation between the two is as follows:

$$T_a = \frac{1}{\log\left(\frac{1+I}{1+R}\right)} \times \log\left\{1 + T_s \times \left[\frac{\left(\frac{1+I}{1+R}\right) - 1}{\left(\frac{1+I}{1+R}\right)}\right]\right\} \quad .$$

For purposes of comparison, all that is necessary is to assign a value to T_s for substitution into the equation for T_a. Given a value for T_s, the next step is to calculate T_a for alternative pairs of unequal values of I and R. The results are summarized in the following tables. An illustrative explanation of the results is offered in the page following the last table.

ADJUSTED PAYBACK PERIODS IN YEARS CORRESPONDING
TO A SIMPLE PAYBACK OF 1 YEAR

R\I	.01	.02	.03	.04	.05	.06	.07	.08	.09	.10	.11	.12	.13	.14	.15
.01	1.00	.99	.98	.97	.96	.95	.95	.94	.93	.92	.91	.91	.90	.89	.88
.02	1.01	1.00	.99	.98	.97	.96	.95	.95	.94	.93	.92	.91	.91	.90	.89
.03	1.02	1.01	1.00	.99	.98	.97	.96	.95	.95	.94	.93	.92	.92	.91	.90
.04	1.03	1.02	1.01	1.00	.99	.98	.97	.96	.96	.95	.94	.93	.92	.92	.91
.05	1.04	1.03	1.02	1.01	1.00	.99	.98	.97	.96	.96	.95	.94	.93	.92	.92
.06	1.05	1.04	1.03	1.02	1.01	1.00	.99	.98	.97	.96	.96	.95	.94	.93	.92
.07	1.06	1.05	1.04	1.03	1.02	1.01	1.00	.99	.98	.97	.96	.96	.95	.94	.93
.08	1.07	1.06	1.05	1.04	1.03	1.02	1.01	1.00	.99	.98	.97	.96	.96	.95	.94
.09	1.08	1.07	1.06	1.05	1.04	1.03	1.02	1.01	1.00	.99	.98	.97	.97	.96	.95
.10	1.09	1.08	1.07	1.06	1.05	1.04	1.03	1.02	1.01	1.00	.99	.98	.97	.97	.96
.11	1.10	1.09	1.08	1.07	1.06	1.05	1.04	1.03	1.02	1.01	1.00	.99	.98	.97	.97
.12	1.12	1.10	1.09	1.08	1.07	1.06	1.05	1.04	1.03	1.02	1.01	1.00	.99	.98	.97
.13	1.13	1.11	1.10	1.09	1.08	1.07	1.06	1.05	1.04	1.03	1.02	1.01	1.00	.99	.98
.14	1.14	1.13	1.11	1.10	1.09	1.08	1.07	1.06	1.05	1.04	1.03	1.02	1.01	1.00	.99
.15	1.15	1.14	1.12	1.11	1.10	1.09	1.08	1.07	1.06	1.05	1.04	1.03	1.02	1.01	1.00

ADJUSTED PAYBACK PERIODS IN YEARS CORRESPONDING TO A SIMPLE PAYBACK OF 2 YEARS

R\I	.01	.02	.03	.04	.05	.06	.07	.08	.09	.10	.11	.12	.13	.14	.15
.01	2.00	1.97	1.94	1.92	1.89	1.87	1.84	1.82	1.80	1.78	1.75	1.73	1.72	1.70	1.68
.02	2.03	2.00	1.97	1.94	1.92	1.89	1.87	1.84	1.82	1.80	1.78	1.76	1.74	1.72	1.70
.03	2.06	2.03	2.00	1.97	1.94	1.92	1.89	1.87	1.84	1.82	1.80	1.78	1.76	1.74	1.72
.04	2.09	2.06	2.03	2.00	1.97	1.94	1.92	1.89	1.87	1.85	1.82	1.80	1.78	1.76	1.74
.05	2.12	2.09	2.06	2.03	2.00	1.97	1.95	1.92	1.89	1.87	1.85	1.83	1.80	1.78	1.76
.06	2.16	2.12	2.09	2.06	2.03	2.00	1.97	1.95	1.92	1.90	1.87	1.85	1.83	1.81	1.78
.07	2.19	2.16	2.12	2.09	2.06	2.03	2.00	1.97	1.95	1.92	1.90	1.87	1.85	1.83	1.81
.08	2.23	2.19	2.15	2.12	2.09	2.06	2.03	2.00	1.97	1.95	1.92	1.90	1.87	1.85	1.83
.09	2.26	2.22	2.19	2.15	2.12	2.09	2.06	2.03	2.00	1.97	1.95	1.92	1.90	1.87	1.85
.10	2.30	2.26	2.22	2.19	2.15	2.12	2.09	2.06	2.03	2.00	1.97	1.95	1.92	1.90	1.88
.11	2.34	2.30	2.26	2.22	2.18	2.15	2.12	2.09	2.06	2.03	2.00	1.97	1.95	1.92	1.90
.12	2.38	2.33	2.29	2.25	2.22	2.18	2.15	2.12	2.09	2.06	2.03	2.00	1.97	1.95	1.92
.13	2.42	2.37	2.33	2.29	2.25	2.22	2.18	2.15	2.12	2.08	2.06	2.03	2.00	1.97	1.95
.14	2.46	2.41	2.37	2.33	2.29	2.25	2.21	2.18	2.15	2.11	2.08	2.05	2.03	2.00	1.97
.15	2.50	2.45	2.41	2.36	2.32	2.28	2.25	2.21	2.18	2.14	2.11	2.08	2.05	2.03	2.00

ADJUSTED PAYBACK PERIODS IN YEARS CORRESPONDING TO A SIMPLE PAYBACK OF 3 YEARS

R\I	.01	.02	.03	.04	.05	.06	.07	.08	.09	.10	.11	.12	.13	.14	.15
.01	3.00	2.94	2.89	2.84	2.79	2.74	2.69	2.65	2.61	2.57	2.53	2.50	2.46	2.43	2.40
.02	3.06	3.00	2.94	2.89	2.84	2.79	2.74	2.70	2.65	2.61	2.57	2.54	2.50	2.47	2.43
.03	3.12	3.06	3.00	2.94	2.89	2.84	2.79	2.74	2.70	2.66	2.62	2.58	2.54	2.51	2.47
.04	3.19	3.12	3.06	3.00	2.94	2.89	2.84	2.79	2.75	2.70	2.66	2.62	2.58	2.54	2.51
.05	3.26	3.19	3.12	3.06	3.00	2.94	2.89	2.84	2.79	2.75	2.70	2.66	2.62	2.58	2.55
.06	3.33	3.25	3.18	3.12	3.06	3.00	2.94	2.89	2.84	2.80	2.75	2.71	2.67	2.63	2.59
.07	3.40	3.32	3.25	3.18	3.12	3.06	3.00	2.95	2.89	2.84	2.80	2.75	2.71	2.67	2.63
.08	3.48	3.40	3.32	3.25	3.18	3.12	3.06	3.00	2.95	2.89	2.85	2.80	2.75	2.71	2.67
.09	3.56	3.47	3.39	3.32	3.25	3.18	3.12	3.06	3.00	2.95	2.90	2.85	2.80	2.76	2.71
.10	3.64	3.55	3.47	3.39	3.31	3.24	3.18	3.12	3.06	3.00	2.95	2.90	2.85	2.80	2.76
.11	3.73	3.64	3.55	3.46	3.38	3.31	3.24	3.18	3.11	3.06	3.00	2.95	2.90	2.85	2.80
.12	3.83	3.72	3.63	3.54	3.46	3.38	3.31	3.24	3.17	3.11	3.05	3.00	2.95	2.90	2.85
.13	3.93	3.82	3.72	3.62	3.53	3.45	3.38	3.30	3.24	3.17	3.11	3.05	3.00	2.95	2.90
.14	4.03	3.91	3.81	3.71	3.61	3.53	3.45	3.37	3.30	3.23	3.17	3.11	3.05	3.00	2.95
.15	4.14	4.02	3.90	3.80	3.70	3.61	3.52	3.44	3.37	3.30	3.23	3.17	3.11	3.05	3.00

ADJUSTED PAYBACK PERIODS IN YEARS CORRESPONDING
TO A SIMPLE PAYBACK OF 4 YEARS

R\I	.01	.02	.03	.04	.05	.06	.07	.08	.09	.10	.11	.12	.13	.14	.15
.01	4.00	3.90	3.81	3.73	3.65	3.58	3.51	3.44	3.38	3.32	3.26	3.21	3.15	3.10	3.06
.02	4.10	4.00	3.91	3.82	3.73	3.65	3.58	3.51	3.44	3.38	3.32	3.27	3.21	3.16	3.11
.03	4.21	4.10	4.00	3.91	3.82	3.74	3.66	3.58	3.51	3.45	3.39	3.33	3.27	3.22	3.17
.04	4.32	4.21	4.10	4.00	3.91	3.82	3.74	3.66	3.59	3.52	3.45	3.39	3.33	3.28	3.23
.05	4.44	4.32	4.20	4.10	4.00	3.91	3.82	3.74	3.66	3.59	3.52	3.46	3.40	3.34	3.28
.06	4.57	4.44	4.31	4.20	4.10	4.00	3.91	3.82	3.74	3.67	3.59	3.53	3.46	3.40	3.34
.07	4.70	4.56	4.43	4.31	4.20	4.10	4.00	3.91	3.82	3.74	3.67	3.60	3.53	3.47	3.40
.08	4.84	4.69	4.55	4.43	4.31	4.20	4.10	4.00	3.91	3.83	3.75	3.67	3.60	3.53	3.47
.09	5.00	4.83	4.69	4.55	4.42	4.30	4.20	4.09	4.00	3.91	3.83	3.75	3.67	3.60	3.54
.10	5.16	4.99	4.82	4.68	4.54	4.42	4.30	4.19	4.09	4.00	3.91	3.83	3.75	3.68	3.61
.11	5.34	5.15	4.97	4.82	4.67	4.54	4.41	4.30	4.19	4.09	4.00	3.91	3.83	3.75	3.68
.12	5.53	5.32	5.13	4.96	4.81	4.66	4.53	4.41	4.30	4.19	4.09	4.00	3.91	3.83	3.75
.13	5.74	5.51	5.31	5.12	4.95	4.80	4.66	4.53	4.40	4.29	4.19	4.09	4.00	3.91	3.83
.14	5.97	5.72	5.49	5.29	5.11	4.94	4.79	4.65	4.52	4.40	4.29	4.19	4.09	4.00	3.91
.15	6.23	5.94	5.69	5.47	5.27	5.09	4.93	4.78	4.64	4.51	4.40	4.29	4.19	4.09	4.00

ADJUSTED PAYBACK PERIODS IN YEARS CORRESPONDING
TO A SIMPLE PAYBACK OF 5 YEARS

R\I	.01	.02	.03	.04	.05	.06	.07	.08	.09	.10	.11	.12	.13	.14	.15
.01	5.00	4.86	4.73	4.60	4.49	4.38	4.28	4.19	4.10	4.02	3.94	3.86	3.79	3.73	3.66
.02	5.15	5.00	4.86	4.73	4.61	4.49	4.39	4.29	4.20	4.11	4.02	3.95	3.87	3.80	3.73
.03	5.32	5.15	5.00	4.86	4.73	4.61	4.50	4.39	4.29	4.20	4.11	4.03	3.95	3.88	3.81
.04	5.49	5.31	5.15	5.00	4.86	4.73	4.61	4.50	4.40	4.30	4.21	4.12	4.04	3.96	3.89
.05	5.68	5.49	5.31	5.15	5.00	4.86	4.74	4.62	4.51	4.40	4.31	4.21	4.13	4.05	3.97
.06	5.89	5.67	5.48	5.31	5.15	5.00	4.86	4.74	4.62	4.51	4.41	4.31	4.22	4.13	4.05
.07	6.11	5.88	5.67	5.48	5.30	5.15	5.00	4.87	4.74	4.62	4.51	4.41	4.32	4.23	4.14
.08	6.35	6.09	5.87	5.66	5.47	5.30	5.14	5.00	4.87	4.74	4.63	4.52	4.42	4.32	4.23
.09	6.62	6.33	6.08	5.86	5.65	5.47	5.30	5.14	5.00	4.87	4.74	4.63	4.52	4.42	4.33
.10	6.91	6.59	6.32	6.07	5.85	5.64	5.46	5.30	5.14	5.00	4.87	4.75	4.63	4.53	4.43
.11	7.24	6.88	6.57	6.30	6.05	5.84	5.64	5.46	5.29	5.14	5.00	4.87	4.75	4.64	4.53
.12	7.61	7.20	6.86	6.55	6.28	6.04	5.83	5.63	5.45	5.29	5.14	5.00	4.87	4.75	4.64
.13	8.03	7.57	7.17	6.83	6.53	6.27	6.03	5.82	5.62	5.45	5.29	5.14	5.00	4.87	4.75
.14	8.52	7.98	7.52	7.14	6.80	6.51	6.25	6.02	5.81	5.62	5.44	5.28	5.14	5.00	4.87
.15	9.10	8.45	7.93	7.49	7.11	6.78	6.49	6.24	6.01	5.80	5.61	5.44	5.28	5.14	5.00

In the tables, the first row of numbers are alternative values of the energy price inflation rate, I, expressed in decimals ranging from .01 or 1% to .15 or 15%. The first column of numbers are alternative values of the discount rate, R, expressed in the same way as I according to the same range. The numbers in the tables corresponding to I = R are the "simple" paybacks whereas those corresponding to I ≠ R are the "adjusted" paybacks. Notice that in each table the simple payback remains the same whatever the values of I and R provided that I = R. However, for this same simple payback, the adjusted payback varies depending on the pair of unequal values of I and R.

To illustrate the use of the tables, consider the following example. Knowing the values of C, P, and Δ E, suppose that the resulting simple payback is computed to be exactly 3 years. Since this assumes that I = R, the question may be asked: What would be the adjusted payback corresponding to this simple payback of 3 years if, indeed, I and R are not equal? Suppose that I = .10 or 10% and R = .07 or 7%. The third table shows that the adjusted payback would be 2.84 years. If instead I = .08 or 8% and R = .09 or 9%, the same table shows that the adjusted payback is 3.06 years.

An examination of the tables shows a systematic relation between the simple payback periods and the adjusted payback periods. It may be verified that:

(a) If the energy price inflation rate, I, exceeds the discount (interest) rate, R, the simple payback exceeds the adjusted payback.

(b) If the energy price inflation rate, I, is less than the discount (interest) rate, R, the simple payback is less than the adjusted payback.

The above results are much more general than what the tables show since they hold for any combination of I and R.

III. Conclusion: "Simple" Payback for Proposed Rules

The proposed rules require that the economic feasibility of each of the minimum energy efficiency standards be determined by the "general payback equation" in 2MCAR §1.16209:

$$T = \frac{C}{(P) \times (\Delta E)}$$

Using the above equation, 2MCAR §1.16207(G) states that: "If the payback period is less than five years the energy saving improvement meets the economic feasiblity requirement." Thus, the standard that meets this test of economic feasibility shall be mandatory according to 2MCAR §1.16206.

It may be recalled that the above "general payback equation" is identically the "simple" payback equation that holds in the case where the energy price inflation rate, I, is assumed equal to the discount (interest) rate, R, i.e., I = R. In this connection, it is important to point out that the general or simple payback equation meets the statutory provision that "reasonable inflation and interest factors" be included in the payback calculation. As previously shown, at the outset of our earlier payback derivations both I and R were included. However, in the case where I = R, both of these factors algebraically cancel out from the "simple" payback equation. Clearly, the disapperance of inflation and interest factors is not out of neglect from the start but rather a logical result of the assumption that these factors are equally offsetting.

It follows from above that the validity of the "simple" payback equation as a determinant of economic feasibility (less than 5 years) hinges on whether or not the assumption that I = R yields misleading results in the face of

the possibility that I may not be equal to R in actual cases. Given the known or estimated ranges of I and R, the question is whether or not the "adjusted" payback will exceed five years whenever the "simple" payback yields less than five years. Clearly, if it is the case for actual combinations of I and R that both paybacks are at the same time less than five years, then the "simple" payback equation is an acceptable or valid test of economic feasibility for purposes of the rules.

It has been estimated that the annual energy price inflation rates (including a 6% general inflation rate) are as follows:

Fuel Oil (Distillate oil)	8.1%
Propane (liquid gas)	9.3%
Natural Gas	10.7%
Electricity	6.6%

On the other hand, interest rates (to be used as discount rates) on energy-saving home improvement loans range from 1% to 8% on funds available from the Minnesota Housing Finance Agency. A telephone check with banks may confirm that home improvement loans are available at 12% interest rate and at a lower rate of 11% on energy-saving improvement loans. On the basis of these known ranges of appropriate I and R values, the validity of the "simple" payback equation as a test of economic feasibility for the proposed rules may be established.

On the basis of the preceding I and R values, how well will the "simple" payback equation perform on the average? The simple average of the above energy price inflation rates is 8.68%. If we assume that interest rates take integer values from 1%, 2%, 3%, ..., 11%, 12%, the simple average would be 6.5%. Since the average energy price inflation rate of 8.68% exceeds the average

interest rate of 6.5%, it follows that the "simple" payback equation will on the average overestimate the adjusted or actual payback. This conclusion is based on our earlier result that the "simple" payback exceeds the "adjusted" payback in cases where the energy price inflation rate exceeds the discount (interest) rate. Thus, whenever the "simple" payback equation yields a payback of less than five years, the actual or adjusted payback will on the average turn out to be, indeed, less than five years. Accordingly, the "simple" payback equation or equation B of 2MCAR§1.16209 is a valid test of economic feasibility for purposes of the proposed rules.

Moreover, there is a rational economic tendency to reinforce the above contention. Consider that it is economically rational for people to save more of the energy that has a higher inflation rate and to borrow more funds at lower interest rates. Thus, the excess of the average energy price inflation rate over the average interest rate could be larger than shown above. Accordingly, the actual or adjusted payback could also be much shorter than what the "simple" payback equation may estimate.

In conclusion, there are both empirical and theoretical reasons to believe that equation B in 2MCAR§1.16209, which is a "simple" payback equation, will correctly perform the test of economic feasibility for each of the proposed minimum energy efficiency standards.

SUPPLEMENTAL DOCUMENTATION

of the

ENERGY SAVINGS CALCULATIONS

with

TABLES OF VALUES FOR EACH OF THE

EIGHT STANDARDS

1. WINDOW AND DOOR WEATHERSTRIPPING

The following equation shall be used to calculate ΔH for energy efficiency standard 1 (2MCAR1.16206.1).

Equation #1:

$$\Delta H = 1.08 \times (q_0 - q_1) \times L$$

Where

q_0 = The infiltration value in cubic feet per minute per lineal foot of crack, $\frac{CFM}{Ft}$, for the existing window or door weatherstripping condition before improvement;

q_1 = The infiltration value in cubic feet per minute per lineal foot of crack, $\frac{CFM}{Ft}$, for the proposed window or door weatherstripping condition after improvement;

L = The length of the crack in feet which is under consideration for weatherstripping.

The heat loss per degree Fahrenheit per hour due to infiltration is given by equation #1. Table 1.1 shows the air infiltration rate for windows and doors, with and without weatherstripping. The evaluator will determine the types and condition of windows and doors. The figures in Table 1 are used to serve as a guideline. Actual values can vary depending on the quality and the condition of fit. After determining the type and condition, the rate of air infiltration of a window or door before and after weatherstripping can be found from Table 1.1.

The dimension of the window or door is measured. With this information, the heat loss (ΔH) can be calculated by substituting #1 the values of q_0, q_1 and L in equation 1. This calculation is repeated for each window or door.

EXPLANATION OF TABLE #1.1

Note that the pressure difference across the window (door) determines the infiltration rate. The velocity head from the wind and the temperature difference between indoor and outdoor air constitutes the pressure difference. The latter however, is relatively insignificant and is ignored in this analysis. The pressure difference across the window is approximately .6 Pv (ASHRAE Handbook and Product Directory 1977 Fundamentals p. 21.4)

Where: $Pv = .000482\ Vw^2$

Pv = velocity head measured in inches of water

Vw = wind velocity in MPH

Average wind speed in Minnesota during the heating season is 12 MPH (average of weather stations throughout the State), therefore pressure difference = .6 Pv = .042 inches of water for Minnesota. The figures from the ASHRAE Handbook 1977 Fundamentals are corrected to the pressure of .042 of water by $q = C(\Delta p)^n$.

Where: n = 0.65

c = constant

and are listed in Table 1.1

EXPLANATION OF CONSTANT 1.08

$\Delta H = d\ C_p\ 60\ (q_0 - q_1)L$

q_0 = volume flow rate of infiltrating air per ft. of crack before improvement, CFM/ft.

q_1 = volume flow rate of infiltrating air per ft. of crack after improvement, CFM/ft.

d = density of air (.075 lbs/ft^3 standard air)

C_p = specific heat of air (.24 Btu/lb^{0}F)

L = crack length, ft.

60 = conversion factor from hour to minutes

Substitute the numerical values into the ΔH equation, .075 X .24 X 60 = 1.08

It becomes: $\Delta H = 1.08\ (q_0 - q_1)L$

TABLE 1.1 AIR INFILTRATION RATE FOR WINDOWS AND DOORS

Type	Non-weather-stripped CFM/ft	Weatherstripped CFM/ft
A. Window--		
a. Wood:		
1. Double Hung, Average fit++	.27	.15
2. Double Hung, Loose fit+++	.73	.28
3. All others, average fit	.20	.12
b. Aluminum (average fit):		
1. Awning.....	.25	.15
2. Casement.....	.20	.12
3. Hung.....	.20	.12
4. Sliding.....	.30	.18
5. Projected.....	.18	.11
6. Pivoted.....	.12	.07
7. Jalousie.....	.60CFM/ft^2	.36CFM/ft^2
B. Door--		
Wood and Metal, swinging		
1. Average fit	.73	.37
2. Loose fit	1.47	.73

This table is based on the material from ASHRAE Handbook and Product Directory, 1977 Fundamentals, pp. 21.1 - 21.18

++The fit of the average double-hung wood window was determined as .0625 in. crack and .047 in. clearance by measurements on approximately 600 windows under heating season condition.

+++.094 in. crack and clearance represent a poorly iftted window, much poorer than average.

(Both ++ and +++ are from ASHRAE Handbook and Product Directory, 1977, Fundamentals, p. 21.6)

EXAMPLE OF CALCULATION EQUATION #1

A wood double-hung window 3" x 4' is to be weatherstripped. It is considered to be of average fit. How much energy is conserved?

Step 1. Determine the window type and condition (wood, double-hung, average fit).

Step 2. Find the air infiltration rate before weatherstripping from Table 1.1 (.27 CFM/ft.)

Step 3. The air infiltration rate after weatherstripping will be listed in the next column. (.15 CFM/ft.)

Step 4. The length of the crack is determined (17 ft.)

Step 5. Substitute the values of q_0, q_1 and L in equation 1.

$$\Delta H = 1.08 (q_0 - q_1) \times L$$

$$= 1.08 (.27 - .15) (17) \text{ Btu/hr}^0\text{F}$$

$$= 2.20 \text{ Btu/hr}^0\text{F}$$

2. CAULK, GASKET OR SEAL JOINTS

The following equation shall be used to calculate ΔH for energy efficiency standard 2 (2MCAR1.16206.2).

Equation #2:

$$\Delta H = 1.08 \times (q_0 - q_1) \times L$$

Where:

q_0 = The infiltration value in cubic feet per minute per linial foot of crack, $\frac{CFM}{Ft}$, for the existing crack before improvement;

q_1 = The infiltration value in cubic feet per minute per lineal foot of crack, $\frac{CFM}{Ft}$, for the proposed crack seal after improvement;

L = The crack length in feet for the crack under consideration.

Justification of equation #2, which is identical to equation #1, will be found in the "weatherstripping - window and door" section. Table 2.1 shows the air leakage rate for cracks and holes. Measure the crack width or opening area to decide the air infiltration rate through the hole or crack in the exterior envelope. In Table 2.1 the infiltration rate after caulking is adjacent to the rate before caulking. With this information, the heat loss (ΔH) can be calculated by substituting the values of q_0, q_1 and L in equation 1. Note: When evaluating the heat loss through holes, the infiltration rate tabulated in Table 2.1 is on an area per hole basis, hence no length is needed for equation 2.

+ASHRAE Handbook & Product Directory, 1977 Fundamentals, p. 21.5

++ASHRAE Handbook 1977 Fundamentals, p. 21.5

++Doebelin, E. O.
Measurement Systems - Application and Design

pp. 435 - 501, McGraw-Hill

The crack is assumed to be small, so that the air infiltration rate per ft. is proportional to the width of the crack for a fixed pressure difference. Note that if the crack size cannot be measured, determine the size by feeling any draft. If the draft is strong, use crack size larger than .09". If no draft is felt, use crack size smaller than .07".

+++Tamura, G. T.
Measurement of Air Leakage Characteristics of House Enclosures

ASHRAE Transactions, Vol. 81, Part 1, 1975

The equation for evaluating air infiltration rate is:

$$Q = A\ 2400\ (\Delta P)^{\frac{1}{2}}$$

where Q air infiltration rate, cfm

A area of hole, ft^2

2400 conversion constant

ΔP pressure difference, in. of water

TABLE 2.1 AIR LEAKAGE RATE THROUGH JOINTS (12 mph wind or .042" of water)

Location of Joint		Crack Width 1 Hole Diameter	Infiltration Rate Before Caulking	Infiltration Rate After Caulking
*Around window and door frames+		Approx. Scale	.14 cfm/ft	.05 cfm/ft
*Between wall and roof ++ *Between foundation and rim joist *Between wall panels *At penetrations for utility services through walls, floors and roofs	Crack Width	1/32"	.17 cfm/ft	.03 cfm/ft
		1/16"	.34 "	.07 "
		3/32"	.51 "	.10 "
		1/8"	.68 "	.14 "
		5/32"	.85 "	.17 "
		3/16"	1.01 "	.20 "
		7/32"	1.18 "	.24 "
		1/4"	1.35 "	.27 "
Opening in exterior envelope+++	Hole Diameter	1/16"(.003in^2)	.01 cfm/hole	.002 cfm/hole
		1/8"(.012in^2)	.04 "	.01 "
		3/16"(.028in^2)	.10 "	.02 "
		1/4"(.049in^2)	.17 "	.03 "
		3/8"(.110in^2)	.38 "	.08 "
		1/2"(.196in^2)	.67 "	.13 "
		5/8"(.307in^2)	1.05 "	.21 "
		3/4"(.442in^2)	1.51 "	.30 "

EXAMPLE EQUATION #2-A (Caulking Cracks)

A. Calculate the savings in energy by caulking around a window frame. The window is 3' x 4'

1. Determine the type of joint/opening (window frame)

2. Refer to Table 2.1 and find the air infiltration rate before caulking (.14 cfm/ft.)

3. Find the infiltration rate after caulking (next column) (,05 cfm/ft.)

4. The length of the crack is measured (14 ft.)

5. Substitute the values of q_0, q_1 and L into equation 1

$\Delta H = 1.08 (q_0 - q_1) \times L$

$\Delta H = 1.08 (114 - .05) 14$ Btu/hr^{0}F

$\Delta H = 1.36$ Btu/hr^{0}F

EXAMPLE EQUATION #2-B (Sealing Holes)

Calculate the savings in energy by sealing a 1/2 inch diameter hole in the wall.

1. Determine the type of joint/opening.
   (1/2 inch diameter hole)

2. Calculate the area of the hole
   (measure) (.196 $inch^2$)

3. Go to Table 1 and find out the air infiltration rate before caulking (.67 cfm/hole)

4. The infiltration rate after caulking is next to (3)
   (.13 cfm/hole)

5. Substitute the values of q_0, q_1 into equation 2 and ignore L

   $\Delta H = 1.08\ (.67 - .13)$ Btu/Hr^{0}F

   $= .58$ Btu/Hr^{0}F

3. POSITIVE SHUT-OFFS

The following equation shall be used to calculate ΔH for energy efficiency standard 3 (2MCAR1.16206.3).

Equation #3:

$$\Delta H = 1.08 \times (q_0 - q_1) \times A$$

Where:

q_0 = The infiltration value in cubic feet per minute per square foot, $\frac{CFM}{(ft)^2}$, for the existing condition before improvement;

q_1 = The infiltration value in cubic feet per minute per square foot, $\frac{CFM}{(ft)^2}$, for the proposed condition after improvement with a positive shut-off;

A = The cross sectional area of the flue in square feet.

Table 3.1 shows the air flow rate through the chimneys of various sizes with and without the positive shut-offs. For simplification the height of the chimney is not included as the flow rate is independent of the height. The values x + DOC. in tables 3.1 are intended to serve as a guideline (average) and the actual values may vary depending on the outdoor condition (e.g. wind effect, location of chimney, etc.) After selecting the type and size, the air flow rate with and without positive shut-off can be determined. The area of flow is listed in Table 3.1 also. With this information, the rate of heat loss (ΔH) can be evaluated by substituting the values of q_0, q_1 and A in equation 1.

TABLE 3.1** Air flow rate through chimney of various size, with or without positive shut-offs.

Type, size in diameter	Air flow rate through chimney without positive shut-offs q_o cfm/ft^2	Air flow rate through chimney with positive shut-offs q_1 cfm/ft^2	Chimney area ft^2
Round, 6"	439.37	20.03	.196
Round, 7"	474.57	17.16	.267
Round, 8"	507.34	15.00	.349
Rectangular 8"x12"	507.22	12.49	.667
Rectangular 12"x12"	621.37	10.00	1.000

**ASHRAE Handbook and Product Directory, 1975 Equipment p. 26.1-26.34

Tamura, G.T.
Measurement of Air Leakage Characteristics of House Enclosure

ASHRAE Transactions, Vol. 81, Part 1, 1975

DOCUMENTATION

Theoretical draft

$$D_t = .255\ 4\ BH\ (\frac{1}{T_o} - \frac{1}{T_m})*$$

Where: D = theoretical draft, inches of water

B = Atmospheric pressure, inches of mercury

H = Height of chimney, ft.

T_o = Outside air temperature ^0R(absolute)

T_m = Mean temperature of the air column inside the chimney, ^0R(absolute)

In the evaluation of q_0,

B = 30 inches of mercury

T_o = average winter temperature in Minnesota (Nov. - March)

= $18.5^0F = 478.5^0R$

T_m = 45^0F (average between outside and indoor temperature, 72^0F)

= 505^0R

The theoretical draft will be equal to pressure loss (ΔP) in the chimney.

$$D_t = \Delta P$$

The velocity of air flow through the chimney is

$$U = (\frac{(5.2\ (2g_L)\Delta P)^{\frac{1}{2}}}{K\ d_m})\ *$$

Where $g = 32.2\ ft/sec^2$ (gravitational constant)

ΔP = inches of water

$K = .4 \frac{H(ft)}{d(in.)}$ H = height of chimney, d = diameter of chimney

d_m = density of air at mean temperature (t_m)

U air velocity, ft/sec

$q_0 = 60U\ cfm/ft^2$ *

q_1 is evaluated in a similar way. Note that the assumed crack width when the positive shut-off is closed, is 1/8".

Example - Equation #3

Calculate the energy savings of a fireplace chimney 7" diameter when the positive shut-off is closed instead of open.

Determine the typw and size of chimney (round, 7" diameter). From table 3.1 find the air flow rate through the chimney without positive shut-off. (474.57 cfm/ft^2)
The value of air flow rate with positive shut-off closed. (17.16 cfm/ft^2) Find the chimney flow area (.267 ft^2). Substitute the values of q_0, q_1 and A into equation 1.

$\Delta H = 1.08\ (q_o - q_1) \times A$

$\Delta H = 1.08\ (474.57 - 17.16)\ (0.267)$

$\Delta H = 131.90\ Btu/hr^0F$

*ASHRAE Handbook and Product Directory, 1975 Equipment, p. 26.3

4. ATTIC INSULATION

The following equation shall be used to calculate ΔH for energy efficiency standard 4 (2MCAR1.16206.4).

Equation #4:

$$\Delta H = \left(\frac{1}{R_0} - \frac{1}{R_1}\right) \times A$$

Where:

R_0 = The total R-value of the attic/ceiling/roof assembly including existing insulation before improvement;

R_1 = The total R-value of the proposed attic/ceiling/roof assembly including existing insulation and additional insulation after improvement;

A = The area of the attic/ceiling/roof assembly in square feet separating conditioned spaced from unconditioned space.

The heat loss between heated living area and attic is by thermal transmission. For a surface of area A, the heat transmitted through it per degree Fahrenheit is U A where U is the reciprocal of the total R value. Therefore, equation 4 represents the difference in heat loss by thermal transmission before and after improvement. Table 4.1 shows the structure of various kinds of ceilings and roofs. Determine what type of attic/ceiling/roof construction is applicable. Note that the construction material of a given residence may be different from that of the table, but the R value of the non-insulated ceiling/roof structure will not change appreciably. More detailed information will be found in ASHRAE Handbook and Product Directory 1977 Fundamentals. The R-values of the ceilings and roofs in Table 4.1, with and without insulation, are listed in Table 4.2. After determining the type of ceiling/roof find the amount of existing insulation, if any, in the assembly. With this information one can determine the total R value of the existing attic/ceiling/roof assembly by moving horizontally along the line of construction

type chosen and stop under the measured R-value. Interpolation between points is allowed when the R-value of the insulation falls in between tabulation. If the point is on the left of the bold line, additional insulation is required to bring the total R-value to a minimum of 19, i.e. some point on the right side of the line. The amount of insulation needed will by the difference of the two R values on the top of the table. Table 4.3 shows the R-values of some common insulating material.

For the purpose of simplicity, the framing is neglected when considering insulation. The simplification will still give a reasonable result. For example, with the type of ceiling construction and R-19 insulation, the total R-value when considering the effect of framing (10%) is 21.6. Ignoring the framing, the R-value is 23.4. The difference of the two numbers is less than 8%.

TABLE 4.1 STRUCTURE OF VARIOUS KINDS OF CEILINGS AND ROOFS. **

a. Frame Construction Ceiling and Floor

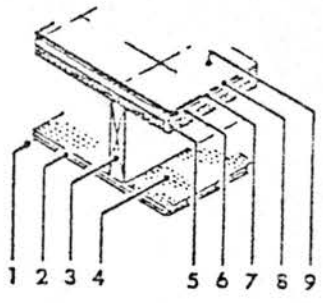

1. Bottom surface (still air)
2. Metal lath and lightweight aggregate, plaster, 0.75 in.
3. Nominal 2 in. x 8 in. floor joist
4. Nonreflective airspace, 7.25 in.
5. Wood subfloor, 0.75 in.
6. Plywood, 0.625 in.
7. Felt building membrane
8. Resilient tile
9. Top surface (still air)

b. Frame Construction Ceiling, no Floor

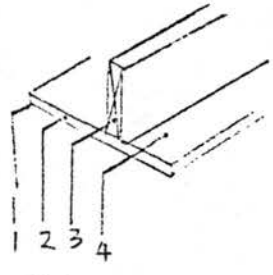

1. Bottom surface (still air)
2. Metal lath and lightweight aggregate, plaster, 0.75 in.
3. Nominal 2 in. x 8 in. floor joist
4. Top surface (still air)

c. Pitched Roof with Wall Board

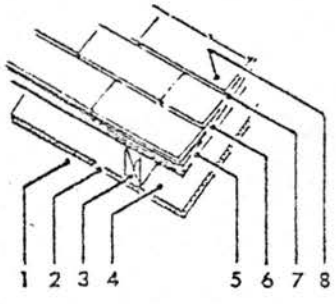

1. Inside surface (still air)
2. Gypsum wallboard 0.5 in. foil backed
3. Nominal 2 in. x 4 in. ceiling rafter
4. 45 deg slope reflective air space, 3.5 in. (50 F mean, 30 deg F temperature difference)
5. Plywood sheathing, 0.625 in.
6. Felt building membrane
7. Asphalt shingle roofing
8. Outside surface (15 mph wind)

**ASHRAE Handbook and Product Directory, 1977 Fundamental pp. 22.18 - 22.22

TABLE 4.1 (cont'd)

d. Pitched Roof without Wallboard

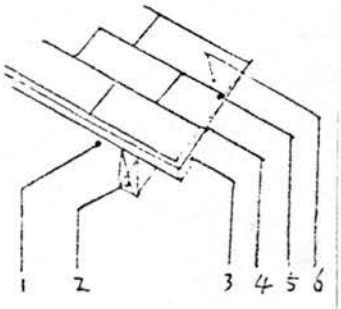

1. Inside surface (still air)
2. Nominal 2 in. x 4 in. ceiling rafter
3. Plywood sheathing, 0.625 in.
4. Felt building membrane
5. Asphalt shingle roofing
6. Outside surface (15 mph wind)

e. Wood Construction Flat Roof and Ceiling

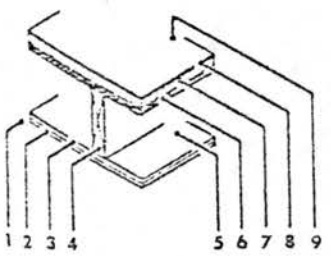

1. Inside surface (still air)
2. Acoustical tile, fiberboard, glued, 0.5 in.
3. Gypsum wallboard, 0.5 in.
4. Nominal 2 in. x 8 in. ceiling joists
5. Nonreflective air space, 7.25 in. (50 mean; 10 deg F temperature difference)
6. Plywood Deck, 0.625 in.
7. Rigid roof deck insulation, c = 0.72, (R=1/C)
8. Built-up roof
9. Outside surface (15 mph wind)

f. Flat masonry roof with Built-up roofing, with and without suspended ceiling

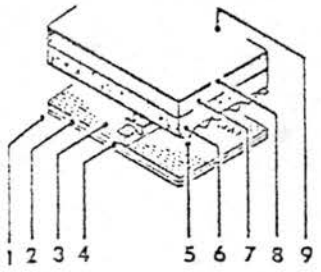

1. Inside surface (still air)
2. Metal lath and lightweight aggregate plaster 0.75 in.
3. Nonreflective air space greater than 3.5 in. (50 F mean: 10 deg F temperature difference)
4. Metal ceiling suspension system with metal hanger rods
5. Corrugated metal deck
6. Concrete slab, lightweight aggregate, 2 in.
7. Rigid roof deck insulation (none)
8. Built-up roofing, 0.375 in.
9. Outside surface (15 mph wind)

g. Metal Construction of Flat Roof

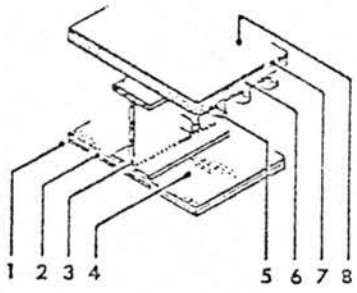

1. Inside surface (still air)
2. Metal lath and sand aggregate plaster 0.75 in.
3. Structural beam
4. Nonreflective air space (50 F mean; 10 deg F temperature difference
5. Metal deck
6. Rigid roof deck insulation, C=0.24(R=1/c)
7. Built-up roofing, 0.375 in.
8. Outside surface (15 mph wind)

TABLE 4.2** R-VALUE OF CEILINGS AND ROOFS, WITH AND WITHOUT INSULATION

Construction Type	←← Insulation →→													
	R0	R3	R7	R11	R15	R19	R23	R27	R31	R35	R39	R43	R47	R51
a	4.8	7.8	11.8	15.8	19.8	23.8	27.8	31.8	35.8	39.8	43.8	47.8	51.8	55.8
b	1.8	4.8	8.8	12.8	16.8	20.8	24.8	28.8	32.8	36.8	40.8	44.8	48.8	52.8
c	4.9	7.9	11.9	15.9	19.9	23.9	27.9	31.9	35.9	39.9	43.9	47.9	51.9	55.9
d	2.2	5.2	9.2	13.2	17.2	21.2	25.2	29.2	33.2	37.2	41.2	45.2	49.2	53.2
e	6.3	9.3	13.3	17.3	21.3	25.3	29.3	33.3	37.3	41.3	45.3	49.3	53.3	59.3
f	4.7	7.7	11.7	15.7	19.7	23.7	27.7	31.7	35.7	39.7	43.7	47.7	51.7	55.7
g	6.3	9.3	13.3	17.3	21.3	25.3	29.3	33.3	37.3	41.3	45.3	49.3	53.3	57.3

Smaller than Minimum ↑ Larger than minimum
Minimum
'R19'

**ASHRAE Handbook and Product Directory, 1977 Fundamentals pp. 22.18 - 22.22

TABLE 4.3 R-VALUES OF COMMON INSULATING MATERIALS***

	Resistance[b] (R)	
	Per inch thickness (1/k)	For thickness listed (1/C)
INSULATING MATERIALS		
Blanket and Batt		
Mineral Fiber, Fibrous Form processed from rock, slag, or glass		
approx.[e] 2-2.75 in.	--	7[d]
approx.[e] 3-3.5 in.	--	11[d]
approx.[e] 3.50-6.5	--	19[d]
approx.[e] 6-7 in.		22[d]
approx.[d] 8.5 in.		30[d]
Board and Slabs		
Cellular glass	2.63	--
Glass fiber, organic bonded	4.00	--
Expanded rubber (rigid)	4.55	--
Expanded polystyrene extruded Cut cell surface	4.00	--
Expanded polystyrene extruded Smooth skin surface	5.00	--
Expanded polystyrene extruded Smooth skin surface	5.26	--
Expanded polystyrene, molded beads	3.57	--
Expanded polyurethane[f] (R-11exp.) (Thickness 1 in. or greater)	6.25	--
Mineral fiber with resin binder	3.45	--
Mineral fiberboard, wet felted		
Core or roof insulation	2.94	--
Acoustical tile	2.86	--
Acoustical tile	2.70	--
Mineral fiberboard, wet molded		
Acoustical tile[g]	2.38	--
Wood or cane fiberboard		
Acoustical tile[g] 0.5in.	---	1.25
Acoustical tile[g] 0.75in.	---	1.89
Interior finish (plank, tile)	2.86	--
Wood shredded (cemented in preformed slabs)	1.67	--
LOOSE FILL		
Cellulosic insulation (milled paper or wood pulp)	3.13-3.70	--
Sawdust or shavings	2.22	--
Wood fiber, softwoods	3.33	--
Perlite, expanded	2.70	--
Mineral fiber (rock, slag or glass)		
approx.[e] 3.75-5 in.		11
approx.[e] 6.5-8.75 in.		19
approx.[e] 7.5-10 in.		22
approx.[e] 10.25-13.75 in.		30
Verniculite, exfoliated	2.13	--
	2.27	--

TABLE 4.3 (cont'd)

	Resistance[b] (R)	
	Per inch thickness (1/k)	For thickness listed (1/C)
Roof Insulation[h]		
Preformed, for use above deck		1.39
Different roof insulations are available in different thicknesses to provide the design C values listed.[h]		to
Consult individual manufacturers for actual thickness of their material.....		8.33

***ASHRAE Handbook and Product Directory, 1977 Fundamentals, pp.22.14-22.15

EXAMPLE - EQUATION #4

A house has type b ceiling of 1000 ft.^{2} and has R-3 insulation. Determine the existing total R-value and the amount of additional insulation required to bring the total R-value to a minimum of 19.

Step 1. Select the applicable construction type and locate it in Table 2 (Type b)

Step 2. Locate the existing R-value at the top of the table. (R3)

Step 3. Find the existing total R-value by reading down the R3 column and stop at row b (4.8)

Step 4. If the point is on the right side of the bold line, no additional insulation is needed. If it is on the left side, move along row b to the other side of the line. (20.5)

Step 5. The R-value of the insulation is obtained by moving vertically up to the top of the table. (R19) The amount of insulation needed will be the difference of the two R-values:

19 - 3 = 16 R-value of additional insulation

Reduction of heat loss (savings) can be calculated using equation 1.

Total R-value before improvement $R_0 = 4.8$

Total R-value after improvement $R_1 = 20.8$

$$\Delta H = \left(\frac{1}{R_0} - \frac{1}{R_1}\right) A$$

$$= \left(\frac{1}{4.8} - \frac{1}{20.8}\right) 1000$$

$$= 160 \text{ Btu/hr}^{\circ}\text{F}$$

This ΔH value can then be used in the general energy savings formula for fuel saving calculation.

5. RIM JOIST INSULATION

The following equation shall be used to calculate ΔH for energy efficiency standard 5 (2MCAR1.16206.5).

Equation #5:

$$\Delta H = \left(\frac{1}{R_o} - \frac{1}{R_1}\right) \times A$$

Where:

R_o = The total R-Value of the rim joist assembly including existing insulation before improvement;

R_1 = The total R-Value of the rim joist assembly including existing and additional insulation after improvement;

A = The area of the rim joist assembly in square feet separating conditioned space from unconditioned space.

The R-values of the rim joist with and without insulation are listed in table 5.1. After determining the amount of existing insulation in the rim joist, the evaluator will find out if it needs any insulation in Table 5.1. If the total R-values is below 11 some insulation is needed to increase the R-value to a minimum of 11 or higher. The amount of insulation needed will be the difference of the two R-values on top of the table. Area A for the rim joist calculation is $\frac{2}{3}$ L sq. ft. where L is the length of the wall along the joist and $\frac{2}{3}$ is the height of the joist in feet.

Note: For simplicity, the framing is ignored
(See attic insulation)

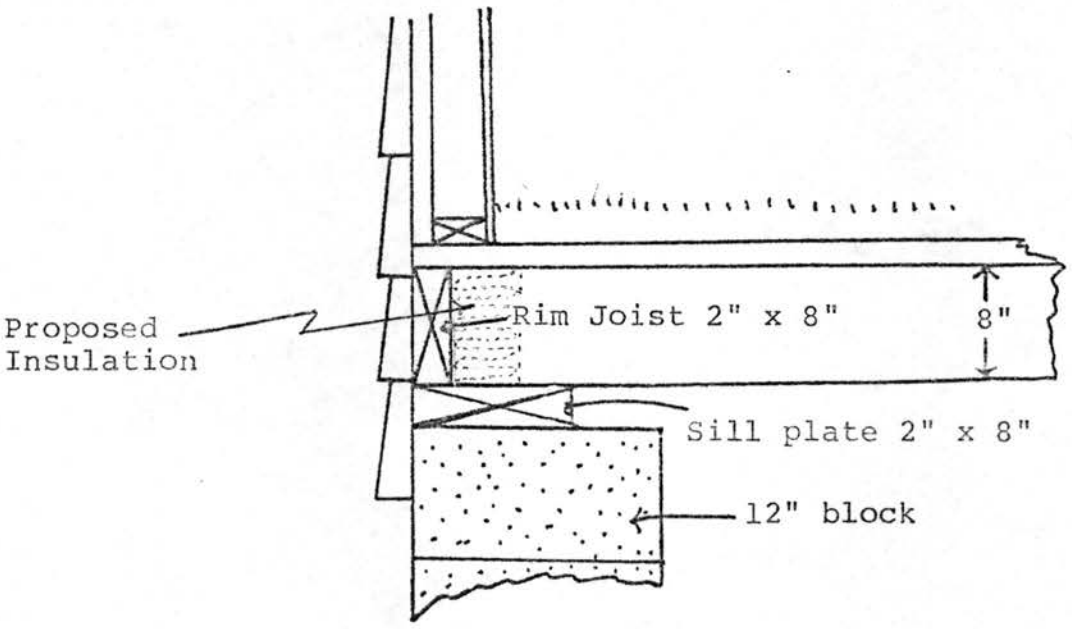

A Typical Section Through Rim Joist

TABLE 5.1 R-VALUE OF RIM JOIST WITH AND WITHOUT INSULATION

Insulation													
R0	R3	R5	R7	R9	R11	R13	R15	R19	R23	R27	R31	R35	R39
3.5	6.5	8.5	10.5	12.5	14.5	16.5	18.5	22.5	26.5	30.5	34.5	38.5	42.5

Does not meet Standard | Meets Standard

EXAMPLE EQUATION #5

For a house with no insulation at the rim joist, how much insulation is needed to up-grade the total R-value to a minimum of 11, and the improvement in heat loss? The house is 28' x 36'

1. Decide the amount of existing insulation (R_o)
2. Find out the existing total R-value which is directly below (1) (3.5)
3. If the point is on the right side of the bold line, no additional insulation is required. If it is on the left side, move to a point on the other side of the line (12.5).
4. The R-value of the insulation lies directly above 12.5 (R9)

The amount of insulation needed will be the difference of the two R-values or R 9 -R 0 = | R9 | R value of insulation required.

Change in heat loss (savings) can be calculated using equation 1.

Total R-value before retrofitting 3.5 (R_o)
Total R-value after retrofitting 12.5 (R_1)

$$A = \text{perimeter} \times \frac{2}{3}$$

$$= (28 + 36)\ (2)\ (\tfrac{2}{3}) = 85.3\ ft^2$$

$$\Delta H = (\frac{1}{R_o} - \frac{1}{R_1})\ A$$

$$= (\frac{1}{3.5} - \frac{1}{12.5})\ (85.3)$$

$$= \boxed{17.6\ \text{Btu/hr F}}$$

The ΔH value can then be used in the general energy savings formula for fuel saving calculation.

6. WALL AND/OR FLOOR INSULATION

The following equation shall be used to calculate ΔH for energy efficiency standard 6 (2MCAR1.16206.6).

Equation #6:

$$\Delta H = \left(\frac{1}{R_0} - \frac{1}{R_1}\right) \times A$$

Where:

R_0 = The total R-Value of the existing wall or floor assembly including existing insulation before improvement;

R_1 = The total R-Value of the proposed wall or floor assembly including existing and additional insulation after improvement;

A = The area of the wall or floor assembly in square feet separating conditioned space from unconditioned space.

Table 6.1 shows the structure of various kinds of walls and floors. Note that the construction material of a particular house may be different from that of the table, but the R-value of the non-insulated wall or floor will not change appreciably from a similar type in Table 6.1. The R-values of the walls and floors are listed in Table 6.2. After determinig the applicable type of wall and floor find the amount of existing insulation, if any, in the assembly. With this information, determine the total R-value of the existing wall or floor assembly by moving horizontally along the line of construction type and stop under the measured R-value. If the point is on the left side of the bold line additional insulation is required to bring the total R-value to a minimum of 11, i.e. some point

on the right side of the line. The amount of insulation needed will be the difference of the two R-values on top of the table. Different types of walls or floors may exist in a building and should be considered separately.

TABLE 6.1 STRUCTURE OF VARIOUS DINDS OF WALL AND FLOOR**

a

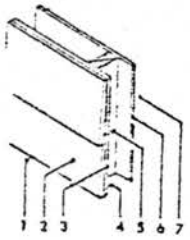

Frame Wall

1. Outside surface (15 mph wind)
2. Siding, wood, 0.5 in. x 8 in. lapped (average)
3. Sheathing, 0.5 in. asphalt impregnated
4. Nonreflective air space, 3.5 in. (50F mean; 10 deg F temperature difference)

b

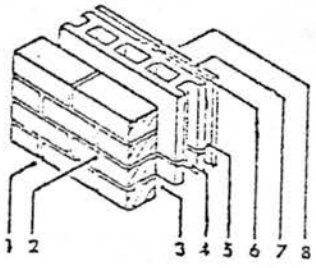

Masonry Cavity Wall

1. Outside surface (15 mph wind)
2. Common brick, 8 in.
3. Nonreflective air space, 2.5 in. (30F mean; 10 deg F temperature difference)
4. Concrete block, stone aggregate, 4 in.
5. Nonreflective air space 0.75 in. (50F mean; 10 deg F temperature difference)
6. Nominal 1 in. x 3 in. vertical furring
7. Gypsum wallboard 0.5 in.
8. Inside surface (still air)

c

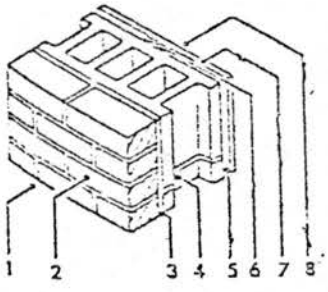

Masonry Wall

1. Outside surface (15 mph wind)
2. Face Brick, 4 in.
3. Cement mortar, 0.5 in.
4. concrete block, cinder aggregate, 8 in,
5. Reflective air space, 0.75 in. (50F mean; 30 deg F temperature difference)
6. Nominal 1 in. x 3 in. vertical furring
7. Gypsum wallboard, 0.5 in. foil backed
8. Inside surface (still air)

**ASHRAE Handbook, 1977 Fundamental pp. 22.18 - 22.22

TABLE 6.1 (cont'd)

d

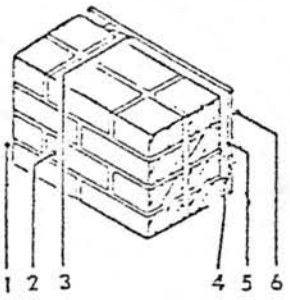

Solid Masonry Wall

1. Outside surface (15 mph wind)
2. Common brick, 8 in.
3. Nominal 1 in. x 3 in. vertical furring
4. Nonreflective air space, 0.75 in. (50F mean; 10 deg F temperature difference)
5. Gypsum wallboard, 0.5 in.
6. Inside surface (still air)

e

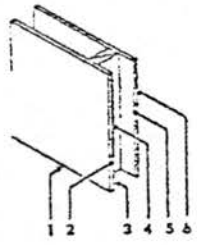

Frame Partition/Interior Wall

1. Inside surface (still air)
2. Gypsum wallboard, 0.5 in.
3. Nonreflective air space, 3.5 in. (50F mean; 10 deg F temperature difference)
4. Nominal 2 in. x 4 in. wood stud
5. Gypsum wallboard 0.5 in.
6. Inside surface (still air)

f

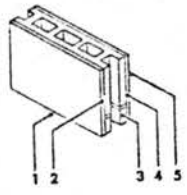

Masonry Partition

1. Inside surface (still air)
2. Plaster, lightweight aggregate, 0.625 in.
3. Sand and gravel aggregate, 12 in.
4. Plaster, lightweight aggregate, 0.625 in.
5. Inside surface (still air)

g

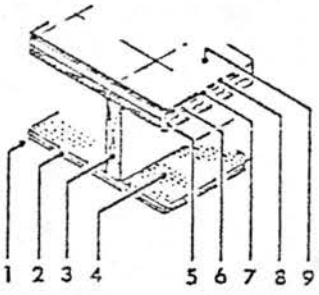

Floor

1. Bottom surface (still air)
2. Metal lath and lightweight aggregate, plaster, 0.75 in.
3. Nominal 2 in. x 8 in. floor joist
4. Nonreflective airspace, 7.25 in.
5. Wood subfloor, 0.75 in.
6. Plywood, 0.625 in.
7. Felt building membrane
8. Resilient tile
9. Top surface (still air)

TABLE 6.2 R-VALUES OF WALL AND FLOOR, WITH AND WITHOUT INSULATION***

Construction Type	Insulation													
	R0	R3	R5	R7	R9	R11	R13	R15	R19	R23	R27	R31	R38	R39
a	4.9	7.9	9.9	11.9	13.9	15.9	17.9	19.9	23.9	27.9	31.9	35.9	39.9	43.9
b	4.9	7.9	9.9	11.9	13.9	15.9	17.9	19.9	23.9	27.9	31.9	35.9	39.9	[illegible]
c	5.8	8.8	10.8	12.8	14.8	16.8	18.8	20.8	24.8	28.8	32.8	36.8	40.8	44.8
d	3.9	6.9	8.9	10.9	12.9	14.9	16.9	18.9	22.9	26.9	30.9	34.9	38.9	42.9
e	3.4	6.4	8.4	10.4	12.4	14.4	16.4	18.4	22.4	26.4	30.4	34.4	38.4	42.4
f	1.3	4.3	6.3	8.3	10.3	12.3	14.3	16.3	20.3	24.3	28.3	32.3	36.3	40.3
g	4.8	7.8	9.8	11.8	13.8	15.8	17.8	19.8	23.8	27.8	31.8	35.8	39.8	43.8

***The framing is ignored, see attic insulation for justification.

EXAMPLE EQUATION #6

For a masonry wall (type C) 10' x 20' how much insulation will be needed to insulate it to a minimum of R 11?

Example

1. Select the construction type and locate it in Table 6.2 (Type C).

2. Locate the existing R-value at the top of the table. (R^o)

3. Find out the existing total R-value by going down the R^o column and stop at row c (5.8).

4. If the point is on the right side of the bold line, no additional insulation is required. If it is on the left side, move along row c to the other side of the line (12.8).

5. The R-value of the insulation is obtained by moving vertically up to the top of the table. (R7)

The amount of insulation needed will be the difference of the two R-values.

7 - 0 = 7 R value of insulation required

Change in the heat loss (saving) can be calculated using equation 1.

Total R-value before retrofitting 5.8 (R_o)
Total R-value after retrofitting 12.8 (R_1)

$A = 10 \times 20\ ft^2 = 200\ ft^2$

$$\Delta H = \left(\frac{1}{Ro} - \frac{1}{R_1}\right) A$$

$$= \left(\frac{1}{5.8} - \frac{1}{12.8}\right) (200)$$

$$= 18.9\ Btu/hr^oF$$

This ΔH value can then be used in the general energy savings formula for fuel savings calculation.

7. STORM WINDOWS

The following equation shall be used to calculate ΔH for energy efficiency standard 7 (2MCAR1.16026.7).

Equation #7:

$$\Delta H = (U_0 - U_1) \times A$$

Where:

U_0 = The U-value for the existing window assembly before improvement;

U_1 = The U-value for the proposed window assembly after improvement;

A = The area of the window assembly in square feet separating conditioned space from unconditioned space.

The change in the rate of heat loss by installing a storm windlow is given by equation 7. Note that air infiltration is not considered because the prime window is already weatherstripped and the addition of storm window will not improve the air infiltration rate through the composite structure by any significant amount. Thermal transmission, is the major element to be considered for energy saving calculation. Table 7.1 shows the U-value of single glazed and double glazed window units (with storms).

Measure the area of the window. With this information, the heat loss (ΔH) can be calculated by substituting the values of U_0, U_1 and A into equation #7 and repeat the calculation for each window.

TABLE 7.1** U-value of single glazed window commonly used in residential houses

Type	Without storm window Btu/hr. ft^2F	With storm window Btu/hr. ft^2F
Single Glass	1.10	.50
Double Glaze		
.1875 - in. air space	.62	
.25-in. air space	.58	
.5-in. air space	.49	
Triple Glaze		
.25-in. air space	.39	
.5- in. air space	.31	

**ASHRAE Handbook and Product Directory, 1977 Fundamentals p. 22.24

Example Equation #7

Calculate the savings achieved by installing a storm window 4' x 3'. From Table 7.1 find U value with no storm window. (1.10 Btu/hr ft^2°F).

Find U value with storm window (.5 Btu/hr ft^2°F).

Calculate the area of the window. (12 ft^2)

ΔH = (1.1o - .5)12 Btu/hr°F

= 7.2 Btu/hr°F

8. STORM DOORS

The following equation shall be used to calculate H for energy efficiency standard 8 (2MCAR1.16206.8).

Equation #8:

$$\Delta H = (U_O - U_1) \times A$$

Where:

U_O = The U-Value for the existing door assembly before improvement;

U_1 = The U-Value for the proposed door assembly after improvement;

A = The area of the door assembly in square feet separating conditioned space from unconditioned space.

The change in the rate of heat loss by installing a storm door is given by equation 8. Table 8.1 shows the U-value of different kinds of doors commonly used in residences. Determine the types of exterior doors on the residence and find the U-value of each door from Table 8.1. If the U-value is larger than 0.5 (or R value smaller than 2) storm door is needed. The U-value of the exterior door-storm door unit is listed beside the U-value of the exterior door. Measure the area of the door. With this information, the heat loss (ΔH) can be calculated by substituting the values of U_o, U_1 and A into equation 1. Repeat the calculation for each door.

TABLE 8.1** U-value of different kinds of slab doors commonly used in residences.

Type	Storm Door Btu/hr. ft^2F	With storm door[b] Btu/hr. $ft.^2F.$	
		Wood	Metal
a. Solid Wood--			
Thickness[a]			
1 in.....	.64	.30	.39
1.25 in.....	.55	.28	.34
1.5 in.....	.49	.27	.33
2 in.....	.43	.24	.29
b. Steel--			
1.75 in.			
A[c].....	.59	.29+	.36+
B[d].....	.19	.14+	.16+
C[e].....	.47	.26+	.31+

**ASHRAE Handbook, 1977 Fundamentals, P. 22.25

There are 3 doors with an R-value less than 2 (or U value larger than .5)

These doors need storm doors.

a. Nominal thickness

b. Values are for wood storm doors of approximately 50% glass. For metal storm doors, values apply for any percent of glass.

c. A = Mineral fiber core ($2lb/ft^3$)

d. B = Solid urethane foam core with thermal break

e. C = Solid polystyrene core with thermal break.

+These U-values are obtained as follows:

The average R-values of wood storm door and metal storm door are computed from solid wood door section and these values are used for the U-values of steel door-storm door unit.

EXAMPLE EQUATION #8

A 1.25 inch solid wood door measures 3' x 6'8". Calculate the savings in energy by installing storm door.

Determine the door type (1.25" solid wood door).

From Table 8.1 find the U-value of the door with no storm door (.55).

If the U-value is larger than .5, storm door is needed. The U-value of the wood door - wood storm door is listed (.28)

The area of the door is calculated (20 ft.)

Substitute the values of U_o, U_1 and A into equation 1.

$$\Delta H = (.55 - .28)\ (20)\ \text{Btu/hr}^{\circ}\text{F}$$

$$= 5.4\ \text{Btu/hr}^{\circ}\text{F}$$

Application of Procedures to Typical Single Family Residence

House Description:

Age: 1965
Type: One story
Living area: 1512 (54' x 28')
No. windows: 11 with alum. combinations (132 sq. ft. window area)
No. doors: 2 standard wood (40 sq. ft.) 1 glass thermo (36 sq. ft.)
Deteriorated caulking
Windows not weatherstripped
Attic insulation: R-4.8 (ceiling construction + R-3)
Wall insulation: R-4.9 (wall construction only)
Thermostat setting: 71° F (days) 67° F (nights)
Perimeter: 164 ft.
Fireplace: Equipped with damper
Annual heating bill: $415.54
Fuel type: Natural gas
Heating system: Forced air Efficiency: .75
Annual fuel consumption: 158 mcf
Heating degree days: 8150 (Ramsey county)
Unit price natural gas: $2.63/mcf

Determination of Δ H

1. Weatherstripping: Audit reveals need to weatherstrip all windows

$\Delta H = 1.08 (q_o - q_i) L$

$= 1.08 (.27 - .15) 187 ft$ (11 windows, 17 ft per window)

$= 24.24$ Btu/hr °F

$\Delta H = 24.24$ Btu/hr °F

2. Caulking: Audit reveals need to caulk all windows

$\Delta H = 1.08 (q_o - q_i) L$

$= 1.08 (.14 - .05) 154 ft$ (11 windows, 14 ft per window)

$= 14.97$ Btu/hr °F

$\Delta H = 14.97$ Btu/hr °F

3. Positive shut-off: NA

4. Attic insulation: Audit reveals need to add R-16

$\Delta H = \left(\frac{1}{R_0} - \frac{1}{R_1}\right) A \qquad R_0 = 4.8 \quad R_1 = 20.8$

$\Delta H = \left(\frac{1}{4.8} - \frac{1}{20.8}\right) 1512$

$= 242.31 \text{ Btu/hr °F}$

$\Delta H = 242.31 \text{ Btu/hr °F}$

5. Rim joist: Audit reveals need to add R-11

$\Delta H = \left(\frac{1}{R_0} - \frac{1}{R_1}\right) A$

$\Delta H = \left(\frac{1}{1.8} - \frac{1}{12.8}\right) 108.24 \qquad R_0 = 1.8 \quad R_1 = 12.8$

$\Delta H = 51.68 \text{ Btu/hr °F}$

$\Delta H = 51.68 \text{ Btu/hr °F}$

6. Wall insulation: Audit reveals need to add R-7

$\Delta H = \left(\frac{1}{R_0} - \frac{1}{R_1}\right) A$

$= \left(\frac{1}{4.9} - \frac{1}{11.9}\right)(1312 - 208)$

$= \left(\frac{1}{4.9} - \frac{1}{11.9}\right) 1104$

$= 132.53 \text{ Btu/hr °F}$

$\Delta H = 132.53 \text{ Btu/hr °F}$

7. Storm windows: NA

8. Storm doors: Audit reveals need to add two storm doors

$$\Delta H = (U_o - U_i) A$$

$$= (.55 - .28) 40$$

$$= 10.8 \text{ Btu/hr}^\circ\text{F}$$

$\Delta H = 10.8$ Btu/hr °F

Determination of Δ E

1. Weatherstripping:

$$\Delta E = \Delta H \left[\frac{D \times 21.7}{N \times V} \right]$$

$$= 24.24 \left[\frac{8150 \times 21.7}{.75 \times 1000} \right]$$

$$= 5716.0 \text{ cf} \times \frac{1}{1000 \text{ cf/mcf}} = 5.71 \text{ mcf}$$

2. Caulking:

$$\Delta E = \Delta H \left[\frac{D \times 21.7}{N \times V} \right]$$

$$= 14.96 \left[\frac{8150 \times 21.7}{.75 \times 1000} \right]$$

$$= 3527.7 \text{ cf} \times \frac{1}{1000 \text{ cf/mcf}} = 3.53 \text{ mcf}$$

3. Positive shut-off: NA

4. Attic insulation:

$$\Delta E = \Delta H \left[\frac{D \times 21.7}{N \times V} \right]$$

$$= 292.3 \left[\frac{8150 \times 21.7}{.75 \times 1000} \right]$$

$$= 57136.8 \text{ cf} \times \frac{1}{1000 \text{ cf/mcf}} = 57.14 \text{ mcf}$$

5. Rim joist:

$$\Delta E = \Delta H \left[\frac{D \times 21.7}{N \times V} \right]$$

$$= 51.68 \left[\frac{8150 \times 21.7}{.75 \times 1000} \right]$$

$$= 12186.6 \text{cf} \times \frac{1}{1000 \text{ cf/mcf}} = 12.19 \text{ mcf}$$

6. Wall insulation:

$$\Delta E = \Delta H \left[\frac{D \times 21.7}{N \times V} \right]$$

$$= 132.53 \left[\frac{8150 \times 21.7}{.75 \times 1000} \right]$$

$$= 31251.9 \text{ cf} \times \frac{1}{1000 \text{ cf/mcf}} = 31.25 \text{ mcf}$$

7. Storm windows: NA

8. Storm doors:

$$\Delta E \simeq \Delta H \left[\frac{D \times 21.7}{N \times V} \right]$$

$$\simeq 10.8 \left[\frac{8150 \times 21.7}{.75 \times 1000} \right]$$

$$= 2546.7 \text{ cf} \times \frac{1}{1000 \text{ cf/mcf}} = 2.55 \text{ mcf}$$

Determination of Dollar Savings

1. Weatherstripping:

$$S = \Delta E \times \$2.63/mcf$$

$$= 5.71 \times 2.63$$

$$= \$15.02$$

2. Caulking:

$$S = \Delta E \times \$2.63/mcf$$

$$= 3.53 \times 2.63$$

$$= \$9.28$$

3. Positive shut-off: NA

4. Attic insulation:

$$S = \Delta E \times \$2.63/mcf$$

$$= 57.14 \times 2.63$$

$$= \$150.28$$

5. Rim joist:

$$S = \Delta E \times \$2.63/mcf$$

$$= 12.19 \times 2.63$$

$$= \$32.06$$

6. Wall insulation:

$$S = \Delta E \times \$2.63/mcf$$

$$= 31.25 \times 2.63$$

$$= \$82.19$$

7. Storm windows: NA

8. Storm doors:

$$S = \Delta E \times \$2.63/mcf$$
$$= 2.55 \times 2.63$$
$$= \$6.71$$

Determination of Payback

1. Weatherstripping:

Cost = $20.00

$$T = \frac{C}{(P) \times (\Delta E)}$$
$$= \frac{20}{2.63 \times 5.71}$$
$$= \frac{20}{15.02}$$

$T = 1.33$ years

2. Caulking:

Cost = $9.20

$$T = \frac{C}{(P) \times (\Delta E)}$$
$$= \frac{9.20}{2.63 \times 3.53}$$
$$= \frac{9.20}{9.28}$$

$T = 1$ year

3. Positive shut-off: NA

4. Attic insulation:

Cost = $454.00

$$T = \frac{C}{(P) \times (\Delta E)}$$

$$= \frac{454}{2.63 \times 57.14}$$

$$= \frac{454}{150.28}$$

T = 3.02 years

5. Rim Joist:

Cost = $44.00

$$T = \frac{C}{(P) \times (\Delta E)}$$

$$= \frac{44}{2.63 \times 12.19}$$

$$= \frac{44}{32.06}$$

T = 1.37 years

6. Wall insulation:

Cost = $435.00

$$T = \frac{C}{(P) \times (\Delta E)}$$

$$= \frac{435}{2.63 \times 31.25}$$

$$= \frac{435}{82.19}$$

$T = 5.29$ years

N.B. Because the payback on this measure is in excess of five years, compliance with the standard is not required.

7. Storm windows: NA

8. Storm doors:

Cost = $120.00

$$T = \frac{C}{(P) \times (\Delta E)}$$

$$= \frac{120}{2.63 \times 2.55}$$

$$= \frac{120}{6.71}$$

$T = 17.9$ years

N.B. Because the payback on this measure is in excess of five years, compliance with the standard is not required.

INDEX

	Page
Introduction	1
Authorization	3
Enforcement	3
Purpose	4
Scope	4
Definitions	4
Minimum Efficiency Standards	4
Procedures for Calculating Energy Savings and Determining Economic Feasibility	6
General Energy Savings Equation	8
General Payback Equation	11
Supplemental Documentation of the Energy Savings Calculations with Tables of Values for each of the Eight Standards	38
Application of Procedures to Typical Single Family Residence	78

DEPARTMENT OF ADMINISTRATION

Richard L. Brubacher
Commissioner

ENERGY CONSERVATION STANDARDS SUBCOMMITTEE

Mrs. Dawn Lundgren, CHAIRMAN
C/O Real Estate Plus
8401 Wayzata Boulevard
Minneapolis, Mn. 55426
(O) 546-8466

Jan Gasterland, VICE CHAIRMAN
Building Official, City Hall
Bloomington, Minnesota 55431
(O) 881-5811

Robert Michaud, P.E.
Michaud, Cooley, Hallberg, Erickson and Assoc.
310 Plymouth Building, 12 South 6th Street
Minneapolis, Minnesota 55402
(O) 339-4941

Allan Wold
230 City Hall
Minneapolis, Minnesota 55415
(O) 348-2544

George Johnson
Truth-In-Housing
Appraisal Valuation Analysts
2841 Johnson Street N.E.
Minneapolis, Minnesota 55418
(O) 781-3141

Ted Shields MACI
200 Hanover Building
480 Cedar Street
St. Paul, Minnesota 55101
(O) 227-9591

Len Bienias, Business Manager
Mpls., Bldg. & Construc. Trades Council
312 Central Avenue S.E.
Minneapolis, Minnesota 55414
(O) 379-4234

Glenn Erickson, Building Official
445 City Hall
St. Paul, Minnesota 55102
(O) 298-4212

Earl Bartels. P.E.
Minnegasco
9525 Wayzata Boulevard
Minneapolis, Minnesota 55426
(O) 540-6046

France Anderson
7545 Park Avenue
Minneapolis, Minnesota 55423
(O) 869-4806
(NSP Energy Mgmt. Dept.)

John Armstrong, Asst. Director
Minnesota Energy Agency
980 American Center Building
St. Paul, Minnesota 55101
(O) 296-9098

Norman Osterby
Assistant Commissioner
Department of Administration
208 State Administration Building
St. Paul, Minnesota 55155
(O) 296-7037

Larry Laukka
Laukka and Associates
7101 York Avenue South
Edina, Minnesota 55435
(O) 831-8433

Sol Jacobs, Building Official
300 Public Health Center
250 South 4th Street
Minneapolis, Minnesota 55415
(O) 348-7734

Jack Horner, General Counsel
Minnesota Multi-Housing Assoc.
1821 University Avenue
St. Paul, Minnesota 55104
(O) 646-9617

John Jackson, General Counsel
Minnesota Bankers Association
332 Baker Building
Minneapolis, Minnesota 55402
(O) 338-7851

Riva Lee
Minnesota Housing Finance Agency
333 Sibley
St. Paul, Minnesota 55101
(O) 296-9820

Gary Grufman, Energy Coordinator
League of Minnesota Cities
300 Hanover Building
480 Cedar Street
St. Paul, Minnesota 55101
(O) 222-2861

John Chapuran, Staff Attorney
Assn. of Minnesota Counties
Room G-5, 55 Sherburne Avenue
St. Paul, Minnesota 55103
(O) 222-5821