

Minnesota Attorney General: Administrative Rules Proceedings

Copyright Notice:

This material may be protected by copyright law (U.S. Code, Title 17). Researchers are liable for any infringement. For more information, visit www.mnhs.org/copyright.

Version 3
August 20, 2018

6-5 MJC

RULE REVIEW CHECKLIST

File No. 1828
DATE RECEIVED 6-3-91
REVIEW DATE 6-12-91
DUE DATE 6-17-91
(DIS)APPROVED 6-12-91 mjc
WITHDRAWN

Docket No. 05-0009-0694
ADOPTED W/O HEARING
EMERGENCY RULE
TO REVISOR ON 6/5/91
REVISOR (DIS)APPROVED 6/10/91
FILED W/SEC. OF STATE 6/13/91
RETURNED TO AGENCY

✓ Rule as adopted (4 copies)

✓ Nov 28, 1988 Notice to Solicit Outside Information/Opinion (if applicable)
Nov 28, 1988 Date published in State Register
✓ Comments

Petition for Adoption of a Rule

✓ Board's Authorizing Resolution
January 30, 1991 Date adopted

✓ Proposed Rule
✓ Revisor's Certificate

✓ Notice of Intent to Adopt Rule
116.49 Statutory Authority
✓ Small Business Statement
N.A. Expenditure of public money statement
Signature ~~sender~~ not signed

✓ Statement of Need and Reasonableness (if applicable)
~~February 14, 1991~~ Small Business Statement
✓ Fees - § 16A.128

✓ Affidavit of Mailing Notice of Intent to Adopt Rule
February 14, 1991 Dated 30/25 days before adoption
✓ Notice attached indicates it is attached
Copy of rule or summary attached

✓ Publication in State Register
February 19, 1991 Date 30/25 days before adoption

sent letters 180-day deadline from:
didn't need it Effective date of law requiring rule (14.12) (both rules) amendments don't apply sent letters
✓ end of comment period (§ 14.26) (rules without hearing)
effective date of statutory authority (§ 14.29) (emergency rules)

✓ Resolution Adopting
May 22, 1991 Date adopted

✓ Findings of Fact, Conclusions & Order Adopting
5-22-91 Date - Someone signed for the Comm. - Patricia Bloomfield

✓ Written Requests, Submissions or Comments

✓ Declaration of Attorney
Ann Cohen Name of SAAG representing agency

Notice of Submission to Attorney General (if applicable)

Affidavit of Mailing Notice to Attorney General (if applicable)

DEPARTMENT: Office of the Attorney General

STATE OF MINNESOTA

OFFICE MEMORANDUM

DATE: June 14, 1991

TO: THOMAS P. CLARK
MPCA
Tanks and Spills Section

FROM: MARTHA J. CASSERLY
Special Assistant
Attorney General

PHONE: 296-6839

SUBJECT: In the Matter of the Adopted Rule Relating to Underground Storage Tanks

The above-referenced rule has been approved as to its legality by the Attorney General on June 12, 1991.

Enclosed is your copy of the approved rule. This office has already filed two copies with the Secretary of State, who will forward one copy to the Revisor of Statutes. The fourth is being retained by this division of the Attorney General's Office for its records.

Also enclosed are any petitions, requests, submissions or comments along with any extra copies of documents which you submitted to the Attorney General.

Your next step is to arrange for publication of the Notice of Adoption in the State Register. In a day or two, you should receive from the Revisor's Office three copies of the notice of adoption of your rule. You should submit two copies of the Notice of Adoption to the State Register for publication. A permanent rule without a hearing does not become effective until five days after a notice of adoption is published in the State Register in accordance with Minn. Stat. § 14.27. An emergency rule becomes effective five working days after approval by the Attorney General; however, the agency must publish a notice in the State Register in accordance with Minn. Stat. § 14.34.

If you have any questions in this regard, please contact me.

MJC:sc

cc: Ann Cohen
William Brown, Chief Judge
MaryAnn Hruby

Pollution Control Agency

Adopted Permanent Rules Relating to Underground Storage Tanks

Rules as Adopted

PROGRAM SCOPE AND INTERIM STANDARDS

7150.0010 APPLICABILITY.

Subpart 1. **Scope.** The requirements of this chapter apply to all owners and operators of an underground storage tank system as defined in part 7150.0030, except as otherwise provided in this subpart and subparts 2 and 3. Any underground storage tank system listed in subpart 3 must meet the requirements of part 7150.0020.

Subp. 2. **Exclusions.** The following underground storage tank systems are excluded from the requirements of this chapter:

A. an underground storage tank system holding hazardous wastes listed or identified under chapter 7045 or Code of Federal Regulations, title 40, part 261, or a mixture of such hazardous waste and other regulated substances;

B. a wastewater treatment tank system that is part of a wastewater treatment facility regulated under United States Code, title 33, section 1317 or 1342;

C. equipment or machinery that contains regulated substances for operational purposes such as hydraulic lift tanks and electrical equipment tanks;

D. an underground storage tank system with a capacity of 110 gallons or less;

E. an underground storage tank system that contains a de minimus concentration of regulated substances;

F. an emergency spill or overflow containment underground storage tank system that is expeditiously emptied after use;

G. a farm or residential tank of 1,100 gallons or less capacity used for storing motor fuel for noncommercial purposes;

Approved by Revisor

H. a tank of 1,100 gallons or less capacity used exclusively for storing heating oil for consumptive use on the premises where stored;

I. a septic tank;

J. a pipeline facility, including gathering lines, regulated under United States Code, title 49, chapter 24 or 29;

K. a surface impoundment, pit, pond, or lagoon;

L. a storm water or wastewater collection system;

M. a flow-through process tank; and

N. a storage tank situated in an underground area such as a basement, cellar, mineworking, drift, shaft, or tunnel if the storage tank is located upon or above the surface of the floor.

Subp. 3. **Deferrals.** Parts 7150.0100 to 7150.0440 do not apply to any of the following types of underground storage tank systems:

A. wastewater treatment tank systems;

B. underground storage tank systems containing radioactive material that are regulated under the Atomic Energy Act of 1954, United States Code, title 42, sections 2011 to 2296;

C. an underground storage tank system that is part of an emergency generator system at nuclear power generation facilities regulated by the Nuclear Regulatory Commission under Code of Federal Regulations, title 10, part 50, Appendix A;

D. airport hydrant fuel distribution systems; and

E. underground storage tank systems with field-constructed tanks.

Subp. 4. **Release detection deferrals.** Parts 7150.0300 to 7150.0350 do not apply to an underground storage tank system that stores fuel solely for use by emergency power generators.

Subp. 5. **Heating oil underground storage tank deferrals.** Parts 7150.0100 to 7150.0440, except 7150.0120, subparts 2 and 6, do not apply to an underground storage tank system of over 1,100 gallons capacity used exclusively for storing heating oil for consumptive use on the premises where stored.

Approved
by Revisor _____

7150.0020 INTERIM STANDARDS FOR DEFERRED UNDERGROUND STORAGE TANK SYSTEMS.

Subpart 1. **Interim standards.** No person may install an underground storage tank system listed in part 7150.0010, subparts 3 to 5, for the purpose of storing regulated substances unless the underground storage tank system, whether of single- or double-wall construction:

A. is installed according to requirements of the American Petroleum Institute Bulletin 1615 to the extent applicable, and all manufacturer's recommendations;

B. will prevent releases due to corrosion or structural failure for the operational life of the underground storage tank system;

C. is cathodically protected against corrosion, constructed of noncorrodible material, steel clad with a noncorrodible material, or designed in a manner to prevent the release or threatened release of any stored substance; and

D. is constructed or lined with material that is compatible with the stored substance.

Subp. 2. **Systems without corrosion protection.** Notwithstanding subpart 1, an underground storage tank system without corrosion protection may be installed at a site that is determined by a corrosion expert not to be corrosive enough to cause it to have a release due to corrosion during its operating life. Owners and operators must maintain records that demonstrate compliance with the requirements of this subpart for the remaining life of the tank. The determination required by this subpart must be in accordance with the National Association of Corrosion Engineers, Standard RP-02-85.

7150.0030 DEFINITIONS.

Subpart 1. **Scope.** For the purposes of this chapter, the following terms and abbreviations have the meanings given them. Terms that are not specifically defined have the meanings given them in Minnesota Statutes, sections 115.01, 115C.02, and 116.46.

~~Subp. 2. **Aboveground release.** "Aboveground release" means~~

Approved by Revisor _____

~~a release to the surface of the land or to surface water, including, but not limited to, releases from the aboveground part of an underground storage tank system and aboveground releases associated with overfills and transfer operations as the regulated substance moves to or from an underground storage tank system.~~

Subp. ~~3.~~ 2. **Agency.** "Agency" means the Minnesota Pollution Control Agency.

Subp. ~~4.~~ 3. **Appurtenances.** "Appurtenances" means devices such as piping, fittings, flanges, valves, and pumps used to distribute, meter, or control the flow of regulated substances to or from an underground storage tank.

~~Subp. 5. Belowground release. "Belowground release" means a release to the subsurface of the land and to groundwater, including, but not limited to, releases from the belowground parts of an underground storage tank system and belowground releases associated with overfills and transfer operations as the regulated substance moves to or from an underground storage tank.~~

Subp. ~~6.~~ 4. **Beneath the surface of the ground.** "Beneath the surface of the ground" means beneath the ground surface or otherwise covered with earthen materials.

Subp. ~~7.~~ 5. **Cathodic protection.** "Cathodic protection" means using a technique to prevent corrosion of a metal surface by making that surface the cathode of an electrochemical cell. For example, a tank system can be cathodically protected through the application of either galvanic anodes or impressed current.

Subp. ~~8.~~ 6. **Cathodic protection tester.** "Cathodic protection tester" means a person who can demonstrate an understanding of the principles and measurements of all common types of cathodic protection systems as applied to buried or submerged metal piping and tank systems. At a minimum, such persons must have education and experience in soil resistivity, stray current, structure-to-soil potential, and component electrical isolation measurements of buried metal piping and tank systems.

Approved
by Revisor _____

Subp. ~~9.~~ 7. **Change in service.** "Change in service" means a permanent removal from service or a change in the reported uses, contents, or ownership of an underground storage tank under Minnesota Statutes, section 116.48, subdivision 3, or an upgrade under this chapter.

Subp. ~~10.~~ 8. **Closure or removal.** "Closure" or "removal" means permanently taking an underground storage tank out of service by either closing it in place, removing it from the ground, or converting it to store a nonregulated substance as required by this chapter.

Subp. ~~11.~~ 9. **Commissioner.** "Commissioner" means the commissioner of the Minnesota Pollution Control Agency.

Subp. ~~12.~~ 10. **Compatible.** "Compatible" means the ability of two or more substances to maintain their respective physical and chemical properties upon contact with one another for the design life of the tank system under conditions likely to be encountered in the underground storage tank.

Subp. ~~13.~~ 11. **Connected piping.** "Connected piping" means underground piping including valves, elbows, joints, flanges, and flexible connectors attached to a tank system through which regulated substances flow. For the purpose of determining how much piping is connected to an individual underground storage tank system, the piping that joins two underground storage tank systems should be allocated equally between them.

Subp. ~~14.~~ 12. **Consumptive use.** "Consumptive use," with respect to heating oil, means consumed on the premises.

Subp. ~~15.~~ 13. **Corrosion expert.** "Corrosion expert" means a person who, by reason of thorough knowledge of the physical sciences and the principles of engineering and mathematics acquired by a professional education and related practical experience, is qualified to engage in the practice of corrosion control on buried or submerged metal piping systems and metal tanks. The person must be accredited or certified as being qualified by the National Association of Corrosion Engineers or be a registered professional engineer who has certification or licensing that includes education and experience in corrosion

Approved
by Revisor _____

control of buried or submerged metal piping systems and metal tanks.

Subp. ~~16.~~ 14. **Dielectric material.** "Dielectric material" means a material that does not conduct direct electrical current. Dielectric coatings are used to electrically isolate underground storage tank systems from the surrounding soils. Dielectric bushings are used to electrically isolate parts of the underground storage tank system, for example, tank from piping.

Subp. ~~17.~~ 15. **Electrical equipment.** "Electrical equipment" means underground equipment that contains dielectric fluid that is necessary for the operation of equipment such as transformers and buried electrical cable.

Subp. ~~18.~~ 16. **Excavation zone.** "Excavation zone" means the volume containing the tank system and backfill material bounded by the ground surface, walls, and floor of the pit and trenches into which the underground storage tank system is placed at the time of installation.

Subp. ~~19.~~ 17. **Existing tank system.** "Existing tank system" means a tank system used to contain an accumulation of regulated substances or for which installation began on or before December 22, 1988. However, a tank system containing hazardous materials that is not regulated under Code of Federal Regulations, title 40, part 280, is considered an existing tank system if installation began on or before (insert 90 days after date of adoption). Installation is considered to have begun if:

A. the owner or operator has obtained all federal, state, and local approvals or permits necessary to begin physical construction of the site or installation of the tank system; and

B. either a continuous on-site physical construction or installation program has begun, or the owner or operator has entered into contractual obligations, that cannot be canceled or modified without substantial loss, for physical construction at the site or installation of the tank system to be completed within a reasonable time.

Approved
by Revisor _____

Subp. ~~20.~~ 18. **Farm tank.** "Farm tank" means a tank located on a tract of land devoted to the production of crops, raising animals, including fish, range land, nurseries with growing operations, and associated residences and improvements. A farm tank must be located on the farm property.

Subp. ~~21.~~ 19. **Flow-through process tank.** "Flow-through process tank" means a tank that forms an integral part of a production process through which there is a steady, variable, recurring, or intermittent flow of materials during the operation of the process. Flow-through process tanks do not include tanks used for the storage of materials prior to their introduction into the production process or for the storage of finished products or by-products from the production process.

Subp. ~~22.~~ 20. **Free product.** "Free product" means a regulated substance that is present as a nonaqueous phase liquid, for example, liquid not dissolved in water.

Subp. ~~23.~~ 21. **Gathering lines.** "Gathering lines" means a pipeline, equipment, facility, or building used in the transportation of oil or gas during oil or gas production or gathering operations.

Subp. ~~24.~~ 22. **Hazardous material.** "Hazardous material" means:

A. a substance listed in Code of Federal Regulations, title 49, section 172.101, including petroleum under subpart ~~38~~ 36, item C, but not including:

(1) a hazardous waste listed or identified under chapter 7045 or Code of Federal Regulations, title 40, part 261;

(2) petroleum under subpart ~~38~~ 36, item A, B, or D; or

(3) a substance that is not liquid at a temperature of 60 degrees Fahrenheit and pressure of 14.7 pounds per square inch absolute; or

B. any mixture of substances identified in item A and petroleum, unless the amount of the substance identified in item A is de minimus.

Substances identified in items A and B which also meet the

Approved
by Revisor _____

definition of petroleum are considered hazardous materials.

Subp. ~~25.~~ 23. **Hazardous material underground storage tank system.** "Hazardous material underground storage tank system" means an underground storage tank system that is used to contain a hazardous material.

Subp. ~~26.~~ 24. **Heating oil.** "Heating oil" means petroleum that is Nos. 1, 2, and 4 light, No. 4 heavy, No. 5 light, No. 5 heavy, and No. 6 technical grades of fuel oil; other residual fuel oils, including Navy Special Fuel Oil and Bunker C; and other fuels when used as substitutes for one of these fuel oils. Heating oil is typically used in the operation of heating equipment, boilers, or furnaces.

Subp. ~~27.~~ 25. **Hydraulic lift tank.** "Hydraulic lift tank" means a tank holding hydraulic fluid for a closed-loop mechanical system that uses compressed air or hydraulic fluid to operate lifts, elevators, and other similar devices.

Subp. ~~28.~~ 26. **Maintenance.** "Maintenance" means the normal operational upkeep to prevent an underground storage tank system from releasing a regulated substance.

Subp. ~~29.~~ 27. **Motor fuel.** "Motor fuel" means petroleum or a petroleum-based substance that is motor gasoline, aviation gasoline, No. 1 or 2 diesel fuel, or any grade of gasohol, and is typically used in the operation of a motor engine.

Subp. ~~30.~~ 28. **New tank system.** "New tank system" means a tank system that is or will be used to contain an accumulation of regulated substances and which is not an existing tank system as defined in subpart ~~19~~ 17.

Subp. ~~31.~~ 29. **Noncommercial purposes.** "Noncommercial purposes," with respect to motor fuel, means not for resale.

Subp. ~~32.~~ 30. **On the premises where stored.** "On the premises where stored," with respect to heating oil, means underground storage tank systems located on the same property where the stored heating oil is used.

Subp. ~~33.~~ 31. **Operational life.** "Operational life" means the period beginning when installation of the tank system has begun until the time the tank system is properly closed under

Approved by Revisor _____

parts 7150.0400 to 7150.0440.

Subp. ~~34.~~ 32. **Operator.** "Operator" means a person in control of or having responsibility for the daily operation of the underground storage tank system or a person who was in control of or had responsibility for the daily operation of the tank immediately before discontinuation of its use.

Operator also means a person who is responsible under Minnesota Statutes, section 115C.021, for a release from an underground storage tank containing petroleum, or a person who is responsible under Minnesota Statutes, section 115B.03, for a release from an underground storage tank containing a hazardous material. Operator does not include a person who operates a tank if the tank is not regulated by this chapter.

Subp. ~~35.~~ 33. **Overfill release.** "Overfill release" means a release occurring when a tank is filled beyond its capacity, resulting in a discharge of the regulated substance to the environment.

Subp. ~~36.~~ 34. **Owner.** "Owner" means a person who holds title to, controls or possesses an interest in an underground storage tank, and a person who held title to, controlled, or possessed an interest in the tank immediately before discontinuation of its use.

Owner also means a person who is responsible under Minnesota Statutes, section 115C.021, for a release from an underground storage tank containing petroleum, or a person who is responsible under Minnesota Statutes, section 115B.03, for a release from an underground storage tank containing a hazardous material.

Owner does not include a person who owns a tank if the tank is not regulated by this chapter and does not include a person who holds an interest in a tank solely for financial security, unless through foreclosure or other related actions the holder of a security interest has taken possession of the tank.

Subp. ~~37.~~ 35. **Person.** "Person" means an individual, partnership, association, public or private corporation, or other legal entity, including the United States government, an

Approved
by Revisor _____

interstate commission or other body, the state, or any agency, board, bureau, office, department, or political subdivision of the state, but does not include the Minnesota Pollution Control Agency.

Subp. ~~38.~~ 36. **Petroleum.** "Petroleum" means one of the following substances:

A. gasoline and fuel oil as defined in Minnesota Statutes, section 296.01, subdivisions 3 and 4;

B. crude oil or a fraction of crude oil that is liquid at a temperature of 60 degrees Fahrenheit and pressure of 14.7 pounds per square inch absolute;

C. constituents of gasoline and fuel oil under item A and constituents of crude oil under item B; or

D. petroleum-based substances that are comprised of a complex blend of hydrocarbons derived from crude oil through processes of separation, conversion, upgrading, and finishing, such as motor fuels, jet fuels, distillate fuel oils, residual fuel oils, lubricants, and used oils.

Subp. ~~39.~~ 37. **Petroleum underground storage tank system.** "Petroleum underground storage tank system" means an underground storage tank system that is used to contain petroleum or a mixture of petroleum with de minimus quantities of hazardous materials.

Subp. ~~40.~~ 38. **Pipe or piping.** "Pipe" or "piping" means a hollow cylinder or tubular conduit for conveying a regulated substance from one point to another within an underground storage tank system.

Subp. ~~41.~~ 39. **Pipeline facilities.** "Pipeline facilities," including gathering lines, means new and existing pipe rights-of-way and any associated equipment, facilities, or buildings.

Subp. ~~42.~~ 40. **Regulated substance.** "Regulated substance" means a hazardous material or petroleum.

Subp. ~~43.~~ 41. **Release.** "Release" means a spilling, leaking, emitting, discharging, escaping, leaching, or disposing from an underground storage tank into the environment including

Approved by Revisor _____

spills associated with overfills and transfer operations as the regulated substance moves to or from an underground storage tank system. "Release" does not include discharges or designed venting allowed under agency rules.

Subp. ~~44.~~ 42. **Release detection.** "Release detection" means determining whether a release of a regulated substance has occurred from the underground storage tank system into the environment or into the interstitial space between the underground storage tank system and its secondary barrier or secondary containment around it.

Subp. ~~45.~~ 43. **Repair.** "Repair" means the correction, restoration, modification, or upgrading of a tank system, including, but not limited to, the addition of cathodic protection systems, the replacement of piping, valves, fill pipes or vents, the lining of a tank through the application of materials such as epoxy resins, or any other similar activities that may affect the integrity of the tank system.

Subp. ~~46.~~ 44. **Residential tank.** "Residential tank" means a tank located on property used primarily for dwelling purposes.

Subp. ~~47.~~ 45. **Septic tank.** "Septic tank" means a watertight, covered receptacle designed to receive or process through liquid separation or biological digestion, the sewage discharged from a building sewer. The effluent from the receptacle is distributed for disposal through the soil and settled solids and scum from the tank are pumped out periodically and hauled to a treatment facility.

Subp. ~~48.~~ 46. **Storm water or wastewater collection system.** "Storm water or wastewater collection system" means piping, pumps, conduits, and any other equipment necessary to collect and transport the flow of surface water run-off resulting from precipitation, or domestic, commercial, or industrial wastewater to and from retention areas or areas where treatment is designated to occur. The collection of storm water and wastewater does not include treatment, except where incidental to conveyance.

Subp. ~~49.~~ 47. **Surface impoundment.** "Surface impoundment"

Approved by Revisor _____

means a natural topographic depression, man-made excavation, or diked area formed primarily of earthen materials, although it may be lined with man-made materials, that is not an injection well.

Subp. ~~50.~~ 48. **Tank.** "Tank" is a stationary device designed to contain an accumulation of regulated substances and constructed of nonearthen materials, such as concrete, steel, and plastic, that provide structural support.

Subp. ~~51.~~ 49. **Tank system.** "Tank system" has the same meaning as underground storage tank and underground storage tank system.

Subp. ~~52.~~ 50. **Underground area.** "Underground area" means an underground room such as a basement, cellar, shaft, or vault providing enough space for physical inspection of the exterior of the tank situated on or above the surface of the floor.

~~Subp. 53. Underground release. "Underground release" means a belowground release.~~

Subp. ~~54.~~ 51. **Underground storage tank or underground storage tank system.** "Underground storage tank" or "underground storage tank system" means any one or combination of containers including tanks, vessels, enclosures, or structures and underground appurtenances connected to them that is used to contain or dispense an accumulation of regulated substances, and the volume of which, including the volume of underground pipes connected to them, is ten percent or more beneath the surface of the ground. This term does not include any tank or pipes connected to a tank described in part 7150.0010, subpart 2.

Subp. ~~55.~~ 52. **Upgrade.** "Upgrade" means the addition or retrofit of systems such as cathodic protection, lining, piping, or spill and overfill controls to improve the ability of an underground storage tank system to prevent the release of a regulated substance.

Subp. ~~56.~~ 53. **Wastewater treatment tank.** "Wastewater treatment tank" means a tank that is designed to receive and treat an influent wastewater through physical, chemical, or biological methods.

Approved by Revisor _____

UNDERGROUND STORAGE TANK SYSTEMS

DESIGN, CONSTRUCTION, INSTALLATION, AND NOTIFICATION

7150.0100 PERFORMANCE STANDARDS FOR NEW UNDERGROUND STORAGE TANK SYSTEMS.

Subpart 1. **Purpose.** To prevent releases due to structural failure, corrosion, or spills and overfills for as long as the underground storage tank system is used to store regulated substances, all owners and operators of new underground storage tank systems must meet the requirements in subparts 2 to 8.

Subp. 2. **Tanks.** Each tank must be properly designed and constructed, and any part underground that routinely contains product must be protected from corrosion using one of the methods specified in items A to E. The corrosion protection methods in items A to D must be in accordance with one of the codes of practice in subpart 3 developed by a nationally recognized association or independent testing laboratory:

A. The tank is constructed of fiberglass-reinforced plastic.

B. The tank is constructed of steel and cathodically protected in the following manner:

(1) the tank is coated with a suitable dielectric material;

(2) field-installed cathodic protection systems are designed by a corrosion expert;

(3) impressed current systems are designed to allow determination of current operating status as required in part 7150.0210, subpart 4; and

(4) cathodic protection systems are operated and maintained according to part 7150.0210.

C. The tank is constructed of a steel- and fiberglass-reinforced plastic composite.

D. The tank is constructed of metal without additional corrosion protection measures provided that:

(1) the tank is installed at a site that is determined by a corrosion expert not to be corrosive enough to

Approved by Revisor _____

cause it to have a release due to corrosion during its operating life; and

(2) owners and operators maintain records that demonstrate compliance with the requirements of subitem (1) for the remaining life of the tank.

E. The tank construction and corrosion protection are determined by the commissioner to be designed to prevent the release or threatened release of a stored regulated substance in a manner that is no less protective of human health and the environment than items A to D. The commissioner's determination under this item must be obtained in writing and owners and operators must keep the determination for the life of the tank.

Subp. 3. **Codes of practice for tanks.** Codes of practice for subpart 2 are described in items A to C.

A. The following codes of practice apply to subpart 2, item A:

(1) Underwriters Laboratories UL 1316, Glass-Fiber-Reinforced Plastic Underground Storage Tanks for Petroleum Products;

(2) Underwriters Laboratories of Canada CAN4-S615-M83, Standard for Reinforced Plastic Underground Tanks for Petroleum Products; or

(3) American Society of Testing and Materials D4021-86, Standard Specification for Glass-Fiber-Reinforced Polyester Underground Petroleum Storage Tanks.

B. The following codes of practice apply to subpart 2, item B:

(1) Steel Tank Institute Specifications for STI-P3 System of External Corrosion Protection of Underground Steel Storage Tanks;

(2) Underwriters Laboratories UL 1746, Corrosion Protection Systems for Underground Storage Tanks;

(3) Underwriters Laboratories of Canada CAN4-S603.1-M85, Standard for Galvanic Corrosion Protection Systems for Steel Underground Tanks for Flammable and Combustible Liquids;

Approved by Revisor _____

(4) Underwriters Laboratories of Canada CAN4-S603-M85, Standard for Steel Underground Tanks for Flammable and Combustible Liquids;

(5) Underwriters Laboratories of Canada CAN4-S631-M84, Standard for Isolating Bushings for Steel Underground Tanks Protected with Coatings and Galvanic Systems;

(6) National Association of Corrosion Engineers RP-02-85, Control of External Corrosion on Metallic Buried, Partially Buried, or Submerged Liquid Storage Systems; or

(7) Underwriters Laboratories UL 58, Steel Underground Tanks for Flammable and Combustible Liquids.

C. The following codes of practice apply to subpart 2, item C:

(1) Underwriters Laboratories UL 1746, Corrosion Protection Systems for Underground Storage Tanks;

(2) Association of Composite Tanks ACT-100, Specification for the Fabrication of FRP Clad Underground Storage Tanks; or

(3) Steel Tank Institute STI F894-89, Specification for External Corrosion Protection of FRP Composite Steel Underground Storage Tanks.

Subp. 4. **Piping.** The piping that routinely contains regulated substances and is in contact with the ground must be properly designed, constructed, and protected from corrosion using one of the methods specified in items A to D. The corrosion protection methods in items A to C must be in accordance with one of the codes of practice in subpart 5 developed by a nationally recognized association or independent testing laboratory:

A. The piping is constructed of fiberglass-reinforced plastic.

B. The piping is constructed of steel and cathodically protected in the following manner:

(1) the piping is coated with a suitable dielectric material;

(2) field-installed cathodic protection systems

Approved by Revisor _____

are designed by a corrosion expert;

(3) impressed current systems are designed to allow determination of current operating status as required in part 7150.0210, subpart 4; and

(4) cathodic protection systems are operated and maintained according to part 7150.0210.

C. The piping is constructed of metal without additional corrosion protection measures, provided that:

(1) the piping is installed at a site that is determined by a corrosion expert to not be corrosive enough to cause it to have a release due to corrosion during its operating life; and

(2) owners and operators maintain records that demonstrate compliance with subitem (1) for the remaining life of the piping.

D. The piping construction and corrosion protection are determined by the commissioner to be designed to prevent the release or threatened release of a stored regulated substance in a manner that is no less protective of human health and the environment than the requirements of items A to C. The commissioner's determination under this item must be obtained in writing and the tank owners and operators must keep the determination for the life of the tank.

Subp. 5. **Codes of practice for piping.** Codes of practice for subpart 4 are described in items A to C.

A. The following codes of practice apply to subpart 4, item A:

(1) Underwriters Laboratories UL 567, Pipe Connectors for Flammable and Combustible Liquids and LP-Gas;

(2) Underwriters Laboratories of Canada CAN4-S633-M84, Flexible Underground Hose Connectors for Flammable and Combustible Liquids; or

(3) Underwriters Laboratories of Canada ULC Subject C107C-M1984, Guide for Glass Fibre Reinforced Plastic Pipe and Fittings for Flammable Liquids.

B. The following codes of practice apply to subpart

Approved by Revisor _____

4, item B:

(1) National Fire Protection Association 30, Flammable and Combustible Liquids Code;

(2) American Petroleum Institute 1615, Installation of Underground Petroleum Storage Systems;

(3) American Petroleum Institute 1632, Cathodic Protection of Underground Petroleum Storage Tanks and Piping Systems; or

(4) National Association of Corrosion Engineers RP-01-69, Control of External Corrosion on Underground or Submerged Metallic Piping Systems.

C. The following codes of practice apply to subpart 4, item C:

(1) National Fire Protection Association 30, Flammable and Combustible Liquids Code; or

(2) National Association of Corrosion Engineers RP-01-69, Control of External Corrosion on Underground or Submerged Metallic Piping Systems.

Subp. 6. **Spill and overfill prevention equipment.**

A. Except as provided in item B, to prevent spilling and overfilling associated with product transfer to the underground storage tank system, owners and operators must use the following spill and overfill prevention equipment:

(1) spill prevention equipment that will prevent release of product to the environment when the transfer hose is detached from the fill pipe, for example, a spill catchment basin; and

(2) overfill prevention equipment that will:

(a) automatically shut off flow into the tank when the tank is no more than 95 percent full; or

(b) alert the transfer operator when the tank is no more than 90 percent full by restricting the flow into the tank or triggering a high-level alarm.

B. Owners and operators are not required to use the spill and overfill prevention equipment specified in item A if:

(1) alternative equipment is used that is

Approved by Revisor _____

determined by the commissioner to be no less protective of human health and the environment than the equipment specified in item A; or

(2) the underground storage tank system is filled by transfers of no more than 25 gallons at one time.

The commissioner's determination under subitem (1) must be obtained in writing and the tank owners and operators must keep the determination for the life of the tank.

Subp. 7. **Installation.** All tanks and piping must be properly installed according to the manufacturer's instructions and one of the following codes of practice developed by a nationally recognized association or independent testing laboratory:

A. American Petroleum Institute 1615, Installation of Underground Petroleum Storage Systems;

B. Petroleum Equipment Institute RP 100, Recommended Practices for Installation of Underground Liquid Storage Systems;

C. American National Standards Institute B31.3, Chemical Plant and Petroleum Refinery Piping; or

D. American National Standards Institute B31.4, Liquid Transportation Systems for Hydrocarbons, Liquid Petroleum Gas, Anhydrous Ammonia and Alcohols.

Subp. 8. **Certification of installation.** Owners and operators must demonstrate compliance with subpart 7 by certifying on the underground storage tank notification form required in part 7150.0120 that:

A. the installer is in compliance with certification requirements imposed by the agency under chapter 7105; and

B. all work listed in the manufacturer's installation checklists has been completed.

7150.0110 UPGRADING OF EXISTING UNDERGROUND STORAGE TANK SYSTEMS.

Subpart 1. **Alternatives allowed.** Not later than December 22, 1998, all existing underground storage tank systems must comply with one of the following requirements:

Approved by Revisor _____

A. new underground storage tank system performance standards under part 7150.0100;

B. the upgrading requirements in subparts 2 to 4; or

C. closure requirements under parts 7150.0400 to 7150.0440, including applicable requirements for corrective action under Minnesota Statutes, section 115.061.

Subp. 2. **Tank upgrading requirements.** Steel tanks must be protected from corrosion using the corrosion protection methods in items A to C.

A. A tank may be upgraded by internal lining if:

(1) the lining is installed according to the requirements of part 7150.0230; and

(2) within ten years after lining, and every five years after that, the lined tank is internally inspected and found to be structurally sound with the lining still performing according to original design specifications.

B. A tank may be upgraded by cathodic protection if the cathodic protection system meets the requirements of part 7150.0100, subpart 2, item B, subitems (2) to (4), and the integrity of the tank is ensured using one of the methods in subitems (1) to (4).

(1) The tank is internally inspected and assessed to ensure that the tank is structurally sound and free of corrosion holes prior to installing the cathodic protection system.

(2) The tank has been installed for less than ten years and is monitored monthly for releases according to part 7150.0330, items E to I.

(3) The tank has been installed for less than ten years and is assessed for corrosion holes by conducting two tightness tests that meet the requirements of part 7150.0330, item D. The first tightness test must be conducted before installing the cathodic protection system. The second tightness test must be conducted between three and six months following the first operation of the cathodic protection system.

(4) The tank is assessed for corrosion holes by a

Approved by Revisor _____

method that is determined by the commissioner to prevent releases in a manner that is no less protective of human health and the environment than subitems (1) to (3).

C. A tank may be upgraded by both internal lining and cathodic protection if:

(1) the lining is installed according to part 7150.0230; and

(2) the cathodic protection system meets the requirements of part 7150.0100, subpart 2, item B, subitems (2) to (4).

D. The corrosion protection methods in items A to C must be in accordance with one or more of the following codes of practice developed by a nationally recognized association or independent testing laboratory:

(1) American Petroleum Institute 1631, Interior Lining of Underground Storage Tanks;

(2) National Leak Prevention Association 631, Spill Prevention, Minimum 10-Year Life Extension of Existing Steel Underground Tanks by Lining Without the Addition of Cathodic Protection;

(3) National Association of Corrosion Engineers RP-02-85, Control of External Corrosion on Metallic Buried, Partially Buried, or Submerged Liquid Storage Systems; or

(4) American Petroleum Institute 1632, Cathodic Protection of Underground Petroleum Storage Tanks and Piping Systems.

Subp. 3. **Piping upgrading requirements.** Metal piping that routinely contains regulated substances and is in contact with the ground must meet the requirements of part 7150.0100, subpart 4, item B, subitems (2) to (4).

Subp. 4. **Spill and overfill prevention equipment.** To prevent spilling and overfilling associated with product transfer to the underground storage tank system, all existing underground storage tank systems must comply with new underground storage tank system spill and overfill prevention equipment requirements in part 7150.0100, subpart 6.

Approved
by Revisor _____

7150.0120 NOTIFICATION REQUIREMENTS.

Subpart 1. **Notice of underground storage tank system installation.** At least 30 days before beginning installation of an underground storage tank system under part 7150.0100, owners and operators must notify the commissioner of their intent to install the underground storage tank system.

Subp. 2. **Notification of new tanks and changes in service.** An owner who brings an underground storage tank system into use or makes a change in service to an existing tank system after June 1, 1986, must, within 30 days of bringing such tank into use or making a change in service, submit to the agency, in the form prescribed by the commissioner, a notice of the existence of such tank system or type of change in service, including the information required by Minnesota Statutes, section 116.48, subdivisions 1 and 3.

Subp. 3. **Owner and operator tank system certification.** Owners and operators of new underground storage tank systems must certify in the notification form compliance with the following requirements:

A. installation of tanks and piping under part 7150.0100, subpart 8;

B. cathodic protection of steel tanks and piping under part 7150.0100, subparts 2 and 4;

C. financial responsibility under Code of Federal Regulations, title 40, part 280, subpart H; and

D. release detection under parts 7150.0310 and 7150.0320.

Subp. 4. **Installer tank system certification.** Owners and operators of new underground storage tank systems must ensure that the installer certifies in the notification form that the methods used to install the tanks and piping comply with part 7150.0100, subpart 7, and that the installer is in compliance with certification requirements imposed by chapter 7105.

Subp. 5. **Repairer tank system certification.** Owners and operators of underground storage tank systems must ensure that

Approved by Revisor _____

the repairer certifies in the notification form that the methods used to repair the tanks and piping comply with parts 7150.0110 and 7150.0230 and that the repairer is in compliance with certification requirements imposed by chapter 7105.

Subp. 6. **Tank seller notification.** A person who sells a tank intended to be used as an underground storage tank or property that the seller knows contains an underground storage tank must notify the purchaser of the tank in writing of the owner's notification obligations under subpart ~~1~~ 2 and under Minnesota Statutes, section 116.48.

GENERAL OPERATING REQUIREMENTS

7150.0200 SPILL AND OVERFILL CONTROL.

Subpart 1. **Spill and overfill release prevention.** Owners and operators must ensure that releases due to spilling or overfilling do not occur. The owner or operator must ensure that the volume available in the tank is greater than the volume of product to be transferred to the tank before the transfer is made and that the transfer operation is monitored constantly to prevent overfilling and spilling. One of the following codes of practice developed by a nationally recognized association or independent testing laboratory must be used to comply with this subpart:

A. National Fire Protection Association 30, Flammable and Combustible Liquids Code;

B. National Fire Protection Association 385, Standard for Tank Vehicles for Flammable and Combustible Liquids; or

C. American Petroleum Institute 1621, Bulk Liquid Stock Control at Retail Outlets.

Subp. 2. **Reporting and cleanup.** The owner and operator must report, investigate, and cleanup any spills and overfills according to Minnesota Statutes, section 115.061.

7150.0210 OPERATION AND MAINTENANCE OF CORROSION PROTECTION.

Subpart 1. **Owner and operator compliance.** Owners and operators of underground storage tank systems with corrosion protection must comply with the requirements in subparts 2 to 5

Approved by Revisor _____

to ensure that releases due to corrosion are prevented for as long as the underground storage tank system is used to store regulated substances, or is temporarily closed in accordance with part 7150.0400.

Subp. 2. **Corrosion protection system maintenance.** All corrosion protection systems must be operated and maintained to continuously provide corrosion protection to the metal components of the part of the tank and piping that routinely contains regulated substances and is in contact with the ground.

Subp. 3. **Cathodic protection system maintenance.** All underground storage tank systems equipped with cathodic protection systems must be inspected for proper operation by a qualified cathodic protection tester according to the following requirements:

A. all cathodic protection systems must be tested within six months of installation and at least every three years after that; and

B. the criteria that are used to determine that cathodic protection is adequate as required by this subpart must be according to the code of practice in National Association of Corrosion Engineers RP-02-85, Control of External Corrosion on Metallic Buried, Partially Buried, or Submerged Liquid Storage Systems.

Subp. 4. **Impressed current system maintenance.** Underground storage tank systems with impressed current cathodic protection systems must also be inspected every 60 days to ensure the equipment is running properly.

Subp. 5. **Recordkeeping.** For underground storage tank systems using cathodic protection, records of the operation of the cathodic protection must be maintained according to part 7150.0240 to demonstrate compliance with the performance standards in this part. These records must provide:

A. the results of the last three inspections required in subpart 4; and

B. the results of testing from the last two inspections required in subpart 3.

Approved
by Revisor _____

7150.0220 COMPATIBILITY.

Owners and operators must use an underground storage tank system made of or lined with materials that are compatible with the substance stored in the underground storage tank system. Owners and operators storing alcohol blends may use the following guidance to comply with the requirements of this part:

A. American Petroleum Institute 1626, Storing and Handling Ethanol and Gasoline-Ethanol Blends at Distribution Terminals and Service Stations; or

B. American Petroleum Institute 1627, Storing and Handling of Gasoline-Methanol/Cosolvent Blends at Distribution Terminals and Service Stations.

7150.0230 REPAIRS ALLOWED.

Owners and operators of underground storage tank systems must ensure that repairs will prevent releases due to structural failure or corrosion as long as the underground storage tank system is used to store regulated substances. The owner and operator of the tank shall ensure that the person performing the repairs has been certified under chapter 7105. The repairs must meet the requirements in items A to F:

A. Repairs to underground storage tank systems must be properly conducted according to one of the following codes of practice developed by a nationally recognized association or independent testing laboratory:

(1) National Fire Protection Association 30, Flammable and Combustible Liquids Code;

(2) American Petroleum Institute 2200, Repairing Crude Oil, Liquefied Petroleum Gas and Product Pipelines;

(3) American Petroleum Institute 1631, Interior Lining of Underground Storage Tanks; or

(4) National Leak Prevention Association 631, Spill Prevention, Minimum 10-Year Life Extension of Existing Steel Underground Tanks by Lining Without the Addition of Cathodic Protection.

B. Repairs to fiberglass-reinforced plastic tanks

Approved by Revisor _____

must be made according to the codes of practice required in item A.

C. Metal pipe sections and fittings that have released product as a result of corrosion or other damage must be replaced. Fiberglass pipes and fittings must be repaired in accordance with the manufacturer's specifications.

D. Repaired tanks and piping must be tightness tested according to parts 7150.0330, item D; and 7150.0340, item B, within 30 days after the date of the completion of the repair except as provided in subitems (1) to (3):

(1) the repaired tank is internally inspected according to the codes of practice required in item A;

(2) the repaired part of the underground storage tank system is monitored monthly for releases according to a method specified in part 7150.0330, items E to I; or

(3) another test method is used that is determined by the commissioner to be no less protective of human health and the environment than the tests in subitems (1) and (2).

E. Within six months after the repair of a cathodically protected underground storage tank system, the cathodic protection system must be tested according to part 7150.0210, subparts 3 and 4, to ensure that it is operating properly.

F. Owners and operators must maintain records of each repair, and of a commissioner's determination under item D, subitem (3), for the remaining operating life of the underground storage tank system that demonstrate compliance with the requirements of this part.

7150.0240 REPORTING AND RECORDKEEPING.

Owners and operators of underground storage tank systems must cooperate fully with inspections, monitoring, and testing conducted by the agency, as well as requests for document submission, testing, and monitoring by the owner or operator under United States Code, title 42, section 6991d.

Approved by Revisor _____

A. Owners and operators must submit the following information to the commissioner:

(1) notification of all underground storage tank systems under part 7150.0120, including certification of installation for new underground storage tank systems under part 7150.0100, subpart 8;

(2) notification of the discovery of an abandoned tank or of a change in the uses, contents, or ownership of a tank under Minnesota Statutes, section 116.48, subdivisions 2 and 3;

(3) reports of all releases under Minnesota Statutes, section 115.061, including suspected releases, spills and overfills, and confirmed releases;

(4) information generated in the course of taking corrective action as defined in Minnesota Statutes, section 115C.02, subdivision 4; and

(5) a notification before permanent closure or change in service under part 7150.0410.

B. Owners and operators must maintain the following information:

(1) a corrosion expert's analysis of site corrosion potential if corrosion protection equipment is not used under part 7150.0100, subparts 2, item D, and 4, item C;

(2) the commissioner's determination that alternative corrosion protection or spill and overfill equipment means may be used under part 7150.0100, subpart 2, item E; 4, item D; or 6, item B;

(3) documentation of operation of corrosion protection equipment under part 7150.0210, subpart 5;

(4) documentation of underground storage tank system repairs under part 7150.0230, item F;

(5) documentation of compliance with release detection requirements under part 7150.0350; and

(6) results of the site investigation conducted at permanent closure under part 7150.0440.

C. Owners and operators must keep the records

Approved
by Revisor _____

required either:

(1) at the underground storage tank site where they are immediately available for inspection by the commissioner; or

(2) at a readily available alternative site where they can be provided for inspection to the commissioner upon request.

In the case of permanent closure records required under part 7150.0440, owners and operators are also provided with the additional alternative of mailing closure records to the commissioner if they cannot be kept at the site or an alternative site as required in this item.

RELEASE DETECTION

7150.0300 GENERAL REQUIREMENTS FOR ALL UNDERGROUND STORAGE TANK SYSTEMS.

Subpart 1. **Methods.** Owners and operators of new and existing underground storage tank systems must provide a method, or combination of methods, of release detection that:

A. can detect a release from any part of the tank and the connected underground piping that routinely contains product;

B. is installed, calibrated, operated, and maintained according to the manufacturer's instructions, including routine maintenance and service checks for operability or running condition; and

C. ~~meets the performance requirements in part 7150.0330 or 7150.0340, with any performance claims and their manner of determination described in writing by the equipment manufacturer or installer. In addition, all methods must be capable of detecting the leak rate or quantity specified for that method in part 7150.0330, items B to E, or 7150.0340, items A and B, with a probability of detection of 0.95 and a probability of false alarm of 0.05.~~ meets the performance standards in part 7150.0330 or 7150.0340. The performance of release detection equipment must be documented with written

Approved by Revisor _____

specifications supplied by the equipment manufacturer or installer. In addition, methods used after the date shown in the following table, except for methods permanently installed prior to that date, must be capable of detecting the leak rate or quantity specified for that method in the part of the rules listed in the table with a probability of detection of 0.95 and a probability of false alarm of 0.05:

Method	Part	Date
Manual tank gauging	7150.0330, items B & C	December 22, 1990
Tank tightness testing	7150.0330, item D	December 22, 1990
Automatic tank gauging	7150.0330, item E	December 22, 1990
Automatic line leak detection	7150.0340, item A	September 22, 1991
Line tightness testing	7150.0340, item B	December 22, 1990

Subp. 2. **Release notification.** When a release detection method operated according to the performance standards in parts 7150.0330 and 7150.0340 indicates a release may have occurred, owners and operators must notify the agency according to Minnesota Statutes, section 115.061.

Subp. 3. **Release detection schedule.** Owners and operators of all underground storage tank systems must comply with the release detection requirements of parts 7150.0300 to 7150.0350 by December 22 of the year listed in the following table. Hazardous material tanks which are not regulated by Code of Federal Regulations, title 40, part 280, must comply with these requirements by the date indicated or by (insert date 180 days after date of adoption), whichever is later:

Schedule for Phase-in of Release Detection

Year System Was Installed	Year When Release Detection is Required (by December 22 of the year indicated)				
	1989	1990	1991	1992	1993
Before 1965 or date unknown	RD	P			
1965-1969		P/RD			
1970-1974		P	RD		
1975-1979		P		RD	
1980-1988		P			RD
New tanks (after December 22, 1988)	Immediately upon installation				

P=must begin release detection for all pressurized piping according to part 7150.0310.

RD=must begin release detection for tanks and suction

Approved by Revisor _____

piping according to parts 7150.0310, items A and B, subitem (2); and 7150.0320.

Subp. 4. **Closure.** Owners and operators of existing underground storage tank systems that cannot apply a method of release detection that complies with the requirements of parts 7150.0300 to 7150.0350 must complete the closure procedures in parts 7150.0400 to 7150.0440 by the date on which release detection is required for the underground storage tank system under subpart 3.

7150.0310 REQUIREMENTS FOR PETROLEUM UNDERGROUND STORAGE TANK SYSTEMS.

Owners and operators of petroleum underground storage tank systems must provide release detection for tanks and piping as required in items A and B.

A. Tanks must be monitored at least every 30 days for releases using one of the methods in part 7150.0330, items E to I, except that:

(1) underground storage tank systems that meet the performance standards in part 7150.0100 or 7150.0110, and the monthly inventory control requirements in part 7150.0330, item A or B, may use tank tightness testing, conducted according to part 7150.0330, item D, at least every five years until December 22, 1998, or until ten years after the tank is installed or upgraded under part 7150.0110, item B, whichever is later;

(2) underground storage tank systems that do not meet the performance standards in part 7150.0100 or 7150.0110 may use monthly inventory controls conducted according to part 7150.0330, item A or B, and annual tank tightness testing conducted according to part 7150.0330, item D, until December 22, 1998, when the tank must be upgraded under part 7150.0110 or permanently closed under part 7150.0410; and

(3) tanks with capacities of ~~550~~ 1,000 gallons or less may use weekly manual tank gauging conducted according to part 7150.0330, item B, as the sole method of release detection.

Approved
by Revisor _____

B. Underground piping that routinely contains regulated substances must be monitored for releases in a manner that meets one of the requirements in subitem (1) or (2).

(1) Underground piping that conveys regulated substances under pressure must:

(a) be equipped with an automatic line leak detector conducted according to part 7150.0340, item A; and

(b) have an annual line tightness test conducted according to part 7150.0340, item B, or have monthly monitoring conducted according to part 7150.0340, item C.

(2) Underground piping that conveys regulated substances under suction must either have a line tightness test conducted at least every three years and according to part 7150.0340, item B, or use a monthly monitoring method conducted according to part 7150.0340, item C. No release detection is required for suction piping that is designed and constructed to meet the following standards:

(a) the below-grade piping operates at less than atmospheric pressure;

(b) the below-grade piping is sloped so that the contents of the pipe will drain back into the storage tank if the suction is released;

(c) only one check valve is included in each suction line;

(d) the check valve is located directly below and as close as practical to the suction pump; and

(e) a method is provided that allows compliance with units (b) to (d) to be readily determined.

7150.0320 REQUIREMENTS FOR HAZARDOUS MATERIAL UNDERGROUND STORAGE TANK SYSTEMS.

Owners and operators of hazardous material underground storage tank systems must provide release detection that meets the requirements in items A and B.

A. Release detection at existing hazardous material underground storage tank systems must meet the requirements for

Approved by Revisor _____

petroleum underground storage tank systems in part 7150.0310 by the dates set forth in part 7150.0300. By December 22, 1998, all existing hazardous material underground storage tank systems must meet the release detection requirements for new systems in item B.

B. Release detection at new hazardous material underground storage tank systems must meet the requirements in subitems (1) to (5):

(1) Secondary containment systems must be designed, constructed, and installed to:

(a) contain regulated substances released from the tank system until they are detected and removed;

(b) prevent the release of regulated substances to the environment at any time during the operational life of the underground storage tank system; and

(c) be checked for evidence of a release at least every 30 days.

The provisions of part 7045.0528 may be used to comply with this subitem.

(2) Double-walled tanks must be designed, constructed, and installed to:

(a) contain a release from any part of the inner tank within the outer wall; and

(b) detect the failure of the inner wall.

(3) External liners, including vaults, must be designed, constructed, and installed to:

(a) contain 100 percent of the capacity of the largest tank within its boundary;

(b) prevent the interference of precipitation or groundwater intrusion with the ability to contain or detect a release of regulated substances; and

(c) surround the tank completely, for example, it is capable of preventing lateral as well as vertical migration of regulated substances.

(4) Underground piping must be equipped with secondary containment that satisfies the requirements of subitem

Approved by Revisor _____

(1), for example, trench liners and jacketing of double-walled pipe. In addition, underground piping that conveys regulated substances under pressure must be equipped with an automatic line leak detector according to part 7150.0340, item A.

(5) Other methods of release detection may be used if owners and operators:

(a) demonstrate to the commissioner that an alternate method can detect a release of the stored substance as effectively as any of the methods allowed in part 7150.0330, items B to I, can detect a release of petroleum;

(b) provide information to the commissioner on effective corrective action technologies, health risks, and chemical and physical properties of the stored substance, and the characteristics of the underground storage tank site; and

(c) obtain approval from the commissioner to use the alternate release detection method before the installation and operation of the new underground storage tank system.

7150.0330 METHODS OF RELEASE DETECTION FOR TANKS.

Each method of release detection for tanks used to meet the requirements of part 7150.0310 must be conducted according to items A to I.

A. Product inventory control or another test of equivalent performance must be conducted monthly to detect a release of at least 1.0 percent flow-through plus 130 gallons on a monthly basis in the following manner:

(1) inventory volume measurements for regulated substance inputs, withdrawals, and the amount still remaining in the tank are recorded each operating day;

(2) the equipment used is capable of measuring the level of product over the full range of the tank's height to the nearest one-eighth of an inch;

(3) the regulated substance inputs are reconciled with delivery receipts by measurement of the tank inventory volume before and after delivery;

Approved
by Revisor _____

(4) deliveries are made through a drop tube that extends to within one foot of the tank bottom;

(5) product dispensing is metered and recorded within the local standards for meter calibration incorporated by reference at part 7600.6800; and

(6) the measurement of any water level in the bottom of the tank is made to the nearest one-eighth of an inch at least once a month.

Practices described in American Petroleum Institute 1621, Recommended Practice for Bulk Liquid Stock Control at Retail Outlets, may be used, where applicable, as guidance in meeting the requirements of this item.

B. Manual tank gauging may be used as described in this item to meet the requirements of part 7150.0310, item A.

(1) For tanks with capacities of 1,000 gallons or less, weekly manual tank gauging may be used as the sole method of release detection.

(2) For tanks with capacities of 1,001 to 2,000 gallons, manual tank gauging may be used in place of product inventory control in item A.

For tanks not described in subitems (1) and (2), manual tank gauging may not be used to satisfy the provisions of part 7150.0310, item A.

C. Manual tank gauging must meet the following requirements:

(1) tank liquid level measurements are taken at the beginning and ending of a period of at least 36 hours during which no liquid is added to or removed from the tank;

(2) level measurements are based on an average of two consecutive stick readings at both the beginning and ending of the period; and

(3) the equipment used is capable of measuring the level of product over the full range of the tank's height to the nearest one-eighth of an inch.

A leak is suspected and subject to the requirements of Minnesota Statutes, section 115.061, if the variation between

Approved by Revisor _____

beginning and ending measurements exceeds the weekly or monthly standards in the following table:

Tank Capacity	Weekly Standard (one test)	Monthly Standard (four-test avg.)	Minimum Duration of Test
If manual tank gauging is the ONLY leak detection method used:			
up to 550 gallons	10 gallons	5 gallons	36 hours
551-1,000 gallons (when largest tank is 64" x 73")	9 gallons	4 gallons	44 hours
1,000 gallons (if tank is 48" x 128")	12 gallons	6 gallons	58 hours
If manual tank gauging is combined with Tank Tightness Testing:			
1,001-2,000 gallons	26 gallons	13 gallons	36 hours

D. Tank tightness testing or another test of equivalent performance must be capable of detecting a 0.1 gallon per hour leak rate from any part of the tank that routinely contains product while accounting for the effects of thermal expansion or contraction of the product, vapor pockets, tank deformation, evaporation or condensation, and the location of the water table.

E. Equipment for automatic tank gauging that tests for the loss of product and conducts inventory control must meet the following requirements:

(1) the automatic product level monitor test can detect a 0.2 gallon per hour leak rate from any part of the tank that routinely contains product; and

(2) inventory control or another test of equivalent performance is conducted according to the requirements of item A.

F. Testing or monitoring for vapors within the soil gas of the excavation zone must meet the following requirements:

(1) the materials used as backfill are sufficiently porous such as gravel, sand, or crushed rock, to readily allow diffusion of vapors from releases into the excavation area;

(2) the stored regulated substance, or a tracer

Approved by Revisor _____

compound placed in the tank system, is sufficiently volatile, such as gasoline, to result in a vapor level that is detectable by the monitoring devices located in the excavation zone in the event of a release from the tank;

(3) the measurement of vapors by the monitoring device is not rendered inoperative by the groundwater, rainfall, or soil moisture or other known interferences so that a release could go undetected for more than 30 days;

(4) the level of background contamination in the excavation zone will not interfere with the method used to detect releases from the tank;

(5) the vapor monitoring points are designed and operated to detect any significant increase in concentration above background of the regulated substance stored in the tank system, a component or components of that substance, or a tracer compound placed in the tank system;

(6) in the underground storage tank excavation zone, the site is assessed to ensure compliance with the requirements in subitems (1) to (4) and to establish the number and positioning of vapor monitoring points that will detect releases within the excavation zone from any part of the tank that routinely contains product; and

(7) vapor monitoring points are clearly marked and secured to avoid unauthorized access and tampering.

G. Testing or monitoring for liquids in the groundwater must meet the provisions of chapter 4725, must comply with local approvals or permits when located within a local public right-of-way, as well as meet the following requirements:

(1) the regulated substance stored is immiscible in water and has a specific gravity of less than one;

(2) groundwater is never more than 20 feet from the ground surface and the hydraulic conductivity of the soil between the underground storage tank system and the monitoring wells or devices is not less than 0.01 centimeters per second, for example, the soil should consist of gravels, coarse to

Approved by Revisor _____

medium sands, coarse silts, or other permeable materials;

(3) the slotted part of the monitoring well casing must be designed to prevent migration of natural soils or filter pack into the well and to allow entry of regulated substance on the water table into the well under both high and low groundwater conditions;

(4) monitoring wells are sealed from the ground surface to the top of the filter pack;

(5) monitoring wells or devices intercept the excavation zone or are as close to it as is technically feasible;

(6) the continuous monitoring devices or manual methods used can detect the presence of at least one-eighth of an inch of free product on top of the groundwater in the monitoring wells;

(7) within and immediately below the underground storage tank system excavation zone, the site is assessed to ensure compliance with the requirements in subitems (1) to (5), and to establish the number and positioning of monitoring wells or devices that will detect releases from any part of the tank that routinely contains product; and

(8) monitoring wells are clearly marked and secured to avoid unauthorized access and tampering.

H. Interstitial monitoring between the underground storage tank system and a secondary barrier immediately around or beneath it may be used, but only if the system is designed, constructed, and installed to detect a leak from any part of the tank that routinely contains product and also meets one of the requirements of subitems (1) to (3).

(1) For double-walled underground storage tank systems, the sampling or testing method can detect a release through the inner wall in any part of the tank that routinely contains product. The provisions outlined in the Steel Tank Institute's Standard for Dual Wall Underground Storage Tanks may be used as guidance for aspects of the design and construction of underground steel double-walled tanks.

Approved
by Revisor _____

(2) For underground storage tank systems with a secondary barrier within the excavation zone, the sampling or testing method used can detect a release between the underground storage tank system and the secondary barrier according to the following requirements:

(a) the secondary barrier around or beneath the underground storage tank system consists of artificially constructed material that is sufficiently thick and impermeable, being at least 10^{-6} centimeters per second for the regulated substance stored, to direct a release to the monitoring point and permit its detection;

(b) the barrier is compatible with the regulated substance stored so that a release from the underground storage tank system will not cause a deterioration of the barrier allowing a release to pass through undetected;

(c) for cathodically protected tanks, the secondary barrier must be installed so that it does not interfere with the proper operation of the cathodic protection system;

(d) the groundwater, soil moisture, or rainfall will not render the testing or sampling method used inoperative so that a release could go undetected for more than 30 days;

(e) the site is assessed to ensure that the secondary barrier is always above the groundwater and not in a 25-year flood plain, unless the barrier and monitoring designs are for use under such conditions; and

(f) monitoring wells and vapor monitoring points are clearly marked and secured to avoid unauthorized access and tampering.

(3) For tanks with an internally fitted liner, an automated device can detect a release between the inner wall of the tank and the liner, and the liner is compatible with the substance stored.

I. Any other type of release detection method, or combination of methods, can be used if:

Approved by Revisor _____

(1) it can detect a 0.2 gallon per hour leak rate or a release of 150 gallons within a month with a probability of detection of 0.95 and a probability of false alarm of 0.05; and

(2) the owner and operator can demonstrate to the commissioner that the method can detect a release as effectively as any of the methods allowed in items D to H and obtain the commissioner's prior approval of the method. In comparing methods, the commissioner shall consider the size of release that the method can detect and the frequency and reliability with which it can be detected. If the method is approved by the commissioner, the owner and operator must comply with any conditions imposed by the commissioner on its use to ensure the protection of human health and the environment.

7150.0340 METHODS OF RELEASE DETECTION FOR PIPING.

Each method of release detection for piping used to meet the requirements of part 7150.0300 must be conducted according to items A to C.

A. Methods which alert the operator to the presence of a leak by restricting or shutting off the flow of regulated substances through piping or triggering an audible or visual alarm may be used only if they detect leaks of three gallons per hour at ten pounds per square inch line pressure within one hour. An annual test of the operation of the leak detector must be conducted according to the manufacturer's requirements.

B. A periodic test of piping may be conducted only if it can detect a 0.1 gallon per hour leak rate at one and one-half times the operating pressure.

C. Any of the methods in part 7150.0330, items F to I, may be used if they are designed to detect a release from any part of the underground piping that routinely contains regulated substances.

7150.0350 RELEASE DETECTION RECORDKEEPING.

Owners and operators shall maintain records according to part 7150.0240 demonstrating compliance with applicable requirements of parts 7150.0300 to 7150.0350. These records

Approved by Revisor _____

must include the requirements of items A to C.

A. All written performance claims pertaining to any release detection system used, and the manner in which these claims have been justified or tested by the equipment manufacturer or installer, must be maintained for as long as the system is being used to comply with the requirements of this chapter.

B. The results of any sampling, testing, or monitoring must be maintained for at least ten years.

C. Written documentation of all calibration, maintenance, and repair of release detection equipment permanently located on-site must be maintained for at least ten years after the servicing work is completed. Any schedules of required calibration and maintenance provided by the release detection equipment manufacturer must be retained as long as the system is being used to comply with the requirements of this chapter.

D. Documentation of the commissioner's approval of alternate release detection methods under part 7150.0330, item I, must be maintained for as long as the methods are being used to comply with the requirements of this chapter.

OUT-OF-SERVICE UNDERGROUND STORAGE TANK SYSTEMS AND CLOSURE

7150.0400 TEMPORARY CLOSURE.

Subpart 1. **Requirements.** In addition to the requirements of chapter 7510, the Minnesota Uniform Fire Code, owners and operators must comply with the provisions in subparts 2 to 4 relating to temporary closure.

Subp. 2. **Operation and maintenance during temporary closure.** When an underground storage tank system is temporarily closed, owners and operators must continue operation and maintenance of corrosion protection according to part 7150.0210, and any release detection according to parts 7150.0300 to 7150.0350. Release detection is not required as long as the underground storage tank system is empty. The underground storage tank system is empty when all materials have been

Approved
by Revisor _____

removed using commonly employed practices so that no more than 2.5 centimeters, or one inch, of residue, or 0.3 percent by weight of the total capacity of the underground storage tank system, remain in the system.

Subp. 3. **Tanks out of service 90 days.** When an underground storage tank system is temporarily closed for 90 days or more, owners and operators must also comply with the following requirements:

A. leave vent lines open and functioning; and

B. cap and secure all other lines, pumps, passageways, and appurtenances.

Subp. 4. **Tanks out of service one year.** When an underground storage tank system is temporarily closed for more than 12 months, owners and operators must permanently close the underground storage tank system if it does not meet either performance standards in part 7150.0100 for new underground storage tank systems or the upgrading requirements in part 7150.0110, except that the spill and overfill equipment requirements do not have to be met. Owners and operators must permanently close the substandard underground storage tank systems at the end of this 12-month period according to parts 7150.0410 to 7150.0440, unless the commissioner provides an extension of the 12-month temporary closure period. Owners and operators must complete a site assessment according to part 7150.0420 before such an extension can be applied for.

7150.0410 PERMANENT CLOSURE AND CHANGES-IN-SERVICE TO STORAGE OF NONREGULATED SUBSTANCES.

Subpart 1. **Requirements.** In addition to the requirements of chapter 7510, the Minnesota Uniform Fire Code, owners and operators must comply with the provisions in subparts 2 to 7 relating to permanent closure and changes-in-service.

Subp. 2. **Notice of closure or change in service.** At least ten days before beginning either permanent closure or a change-in-service under subparts 3 and 4, owners and operators must notify the commissioner of their intent to permanently

Approved by Revisor _____

close or make the change-in-service, unless such action is in response to corrective action. The required assessment of the excavation zone under part 7150.0420 must be performed after notifying the commissioner but before completion of the permanent closure or a change-in-service.

Subp. 3. **Permanent closure.** To permanently close a tank, owners and operators must empty and clean it by removing all liquids and accumulated sludges. All tanks taken out of service permanently must also be either removed from the ground or filled in with an inert solid material.

Subp. 4. **Storage of nonregulated substances.** Continued use of an underground storage tank system to store a nonregulated substance is considered a change in service. Before a change in service to storage of a nonregulated substance, owners and operators must empty and clean the tank by removing all liquid and accumulated sludge and conduct a site assessment according to part 7150.0420.

Subp. 5. **Certified removers.** Owners and operators must ensure that persons performing permanent closures under subpart 3 or changes-in-service under subpart 4 are in compliance with certification requirements imposed by chapter 7105. Certified removers must furnish copies of current certificates issued by the agency to the owner and operator before beginning a permanent closure under subpart 3 or a change-in-service under subpart 4.

Subp. 6. **Tank system closure certification.** Owners and operators must ensure that the person who removes or otherwise closes an underground storage tank system certifies in the notification form that the methods used to remove or otherwise close the tanks and piping comply with part 7150.0410, subparts 3 to 5.

Subp. 7. **Cleaning and closure procedures.** The cleaning and closure procedures listed in one of the following documents must be used as guidance for complying with this part:

A. American Petroleum Institute 1604, Removal and Disposal of Used Underground Petroleum Storage Tanks;

Approved by Revisor _____

B. American Petroleum Institute 1631, Interior Lining of Underground Storage Tanks; or

C. American Petroleum Institute 2015, Cleaning Petroleum Storage Tanks.

7150.0420 ASSESSING THE SITE AT CLOSURE OR CHANGE IN SERVICE.

When removing or closing a tank or making a change in service to storage of a nonregulated substance, owners and operators must measure through laboratory analysis for the presence of a release where contamination is most likely to be present at the underground storage tank site. If contaminated soils, contaminated groundwater, or free product as a liquid or vapor is discovered by this measurement or by any other manner, owners and operators must notify the agency immediately and begin corrective action according to Minnesota Statutes, section 115.061. In selecting sample types, sample locations, and measurement methods, owners and operators must consider the method of closure, the nature of the stored substance, the type of backfill, the depth to groundwater, and other factors appropriate for identifying the presence of a release. The requirements of this part are satisfied if one of the external release detection methods allowed in part 7150.0330, items F and G, is operating according to the requirements of part 7150.0330 at the time of removal, closure, or making a change in service to storage of a nonregulated substance, and indicates no release has occurred.

7150.0430 APPLICABILITY TO PREVIOUSLY CLOSED UNDERGROUND STORAGE TANK SYSTEMS.

When directed by the commissioner, the owner and operator of an underground storage tank system permanently closed before December 22, 1988, must assess the excavation zone and close the underground storage tank system according to parts 7150.0400 to 7150.0440 if releases from the underground storage tank may, in the judgment of the commissioner, pose a current or potential threat to human health and the environment.

Approved
by Revisor _____

7150.0440 CLOSURE RECORDS.

Owners and operators must maintain records according to part 7150.0240 that are capable of demonstrating compliance with closure requirements under parts 7150.0400 to 7150.0440. The results of the excavation zone assessment required in part 7150.0420 must be maintained for at least three years after completion of permanent closure or change in service in one of the following ways:

A. by the owners and operators who took the underground storage tank system out of service;

B. by the current owners and operators of the underground storage tank system site; or

C. by mailing these records to the commissioner if they cannot be maintained at the closed facility.

7150.0500 INCORPORATION BY REFERENCE.

Subpart 1. **Scope.** For purposes of chapter 7150, the documents in subpart 2 are incorporated by reference. They can be found at the Minnesota State Law Library, Ford Building, 117 University Avenue, Saint Paul, Minnesota 55155 or at the addresses indicated. If any of the documents are amended, and if the amendments are incorporated by reference or otherwise made a part of federal technical rules at Code of Federal Regulations, title 40, part 280, then the amendments to documents are also incorporated by reference in this chapter.

Subp. 2. **Referenced standards.** The documents incorporated by reference in this chapter are listed in items A to K:

A. American Societies of Mechanical Engineers, 345 East 47th Street, New York, New York 10017.

(1) B31.3, Chemical Plant and Petroleum Refinery Piping (1987); and

(2) B31.4, Liquid Transportation Systems for Hydrocarbons, Liquid Petroleum Gas, Anhydrous Ammonia and Alcohols (1986).

B. American Petroleum Institute, 1220 L Street Northwest, Washington, D.C. 20005.

Approved by Revisor _____

(1) 1604, Removal and Disposal of Used Underground Petroleum Storage Tanks (1987);

(2) 1615, Installation of Underground Petroleum Storage Systems (1987);

(3) 1621, Bulk Liquid Stock Control at Retail Outlets (1987);

(4) 1626, Storing and Handling Ethanol and Gasoline-Ethanol Blends at Distribution Terminals and Service Stations (1985);

(5) 1627, Storing and Handling of Gasoline-Methanol/Cosolvent Blends at Distribution Terminals and Service Stations (1986);

(6) 1631, Interior Lining of Underground Storage Tanks (1987);

(7) 1632, Cathodic Protection of Underground Petroleum Storage Tanks and Piping Systems (1987);

(8) 2015, Cleaning Petroleum Storage Tanks (1985); and

(9) 2200, Repairing Crude Oil, Liquefied Petroleum Gas and Product Pipelines (1983).

C. American Society of Testing and Materials, 1916 Race Street, Philadelphia, Pennsylvania 19103.

D4021-86, Standard Specification for Glass-Fiber-Reinforced Polyester Underground Petroleum Storage Tanks (1986).

D. Association of Composite Tanks, 108 North State Street, Suite 720, Chicago, Illinois 60602.

ACT-100, Specification for the Fabrication of FRP Clad/Composite Underground Storage Tanks (1989).

E. National Association of Corrosion Engineers, Publications Department, P.O. Box 218340, Houston, Texas 77218.

(1) RP-01-69, Control of External Corrosion on Underground or Submerged Metallic Piping Systems (1983); and

(2) RP-02-85, Control of External Corrosion on Metallic Buried, Partially Buried, or Submerged Liquid Storage Systems (1985).

Approved by Revisor _____

F. National Fire Protection Association, Batterymarch Park, Quincy, Massachusetts 02269.

(1) 30, Flammable and Combustible Liquids Code (1987); and

(2) 385, Standard for Tank Vehicle for Flammable and Combustible Liquids (1985).

G. National Leak Prevention Association, 4090 Rosehill Avenue, Cincinnati, Ohio 45229.

631, Spill Prevention, Minimum 10-Year Life Extension of Existing Steel Underground Tanks by Lining Without the Addition of Cathodic Protection (1988).

H. Petroleum Equipment Institute, P.O. Box 2380, Tulsa, Oklahoma 74101.

RP100, Recommended Practices for Installation of Underground Liquid Storage Systems (1990).

I. Steel Tank Institute, ~~728 Anthony Trail, Northbrook~~ 570 Oakwood Road, Lake Zurich, Illinois ~~60062~~ 60047.

(1) Specifications for STI-P_3 System of External Corrosion Protection of Underground Steel Storage Tanks (1987);

(2) Steel Tank Institute Standard for Dual Wall Underground Steel Storage Tanks (undated); and

(3) STI F894-89, Steel Tank Institute Specification for External Corrosion Protection of FRP Composite Steel Underground Storage Tanks (1989).

J. Underwriters Laboratories Inc., 333 Pfingsten Road, Northbrook, Illinois 60062.

(1) UL 58, Steel Underground Tanks for Flammable and Combustible Liquids (1986);

(2) UL 567, Pipe Connectors for Flammable and Combustible Liquids and LP-Gas (1989);

(3) UL 1316, Glass-Fiber-Reinforced Plastic Underground Storage Tanks for Petroleum Products (1983); and

(4) UL 1746, Corrosion Protection Systems for Underground Storage Tanks (1989).

K. Underwriters Laboratories of Canada, 7 Crouse Road, Scarborough, Ontario, Canada M1R 3A9.

Approved by Revisor _____

(1) CAN4-S603.1-M85, Standard for Galvanic Corrosion Protection Systems for Steel Underground Tanks for Flammable and Combustible Liquids (1985);

(2) CAN4-S603-M85, Standard for Steel Underground Tanks for Flammable and Combustible Liquids (1985);

(3) CAN4-S615-M83, Standard for Reinforced Plastic Underground Tanks for Petroleum Products (1983);

(4) CAN4-S631-M84, Standard for Isolating Bushings for Steel Underground Tanks Protected with Coatings and Galvanic Systems (1984);

(5) CAN4-S633-M84, Flexible Underground Hose Connectors for Flammable and Combustible Liquids (1984); and

(6) ULC Subject C107C-M1984, Guide for Glass Fibre Reinforced Plastic Pipe and Fittings for Flammable Liquids (1984).

Approved
by Revisor _____

APPROVED AS TO FORM AND LEGALITY

June 12 19 91

HUBERT H. HUMPHREY, III
ATTORNEY GENERAL

BY M J Cassedy
SPECIAL ASSISTANT ATTORNEY GENERAL

STATE OF MINNESOTA
DEPARTMENT OF STATE
FILED

JUN 13 1991 2:29 P.M.

Joan Anderson Growe
Secretary of State

Potential Problem
Review before 10th day

Stat. Authority 116.49
The agency must adopt rules applicable to all owners and operators of underground storage tanks. The rules must establish the safeguards necessary to protect human health and the environment.

End of comment period stated as March 21, 1991

Talked to Tom Clark before he sent these rules he said he would send a copy of the Notice of Intent that was signed even though the mailed Notice wasn't signed.
- call and find out if there was a signed copy.

★ Resolution authorizes Commissioner to sign but Patricia Bloomgren signed the Findings of Fact - Assist. Com. authorized to sign - Commissioner not at board meeting

180 day deadline (14.12)
didn't meet it but sent letters to Gov., State Representative and Senator

★ Talked to Tom Clark - 6-3-91
Notice of Intent wasn't signed by Commissioner - but did sign the resolution
Findings of Fact - Commissioner wasn't at the Board Meeting Patricia Bloomgren Assistant Commissioner was at Board meeting for the Commissio

so she signed the Findings of Fact

I told Tom we would contact him if we need the Comm. to Sign the Notice of Findings

STATE OF MINNESOTA

OFFICE OF THE ATTORNEY GENERAL

HUBERT H. HUMPHREY, III
ATTORNEY GENERAL

PUBLIC RESOURCES SECTION
SUITE 200
520 LAFAYETTE ROAD
ST. PAUL, MN 55155
TELEPHONE: (612) 297-1075
FACSIMILE: (612) 297-4139

June 3, 1991

Ms. Patty Nolte
Legal Assistant
Office of the Attorney General
Capitol Office Building
Suite 212
525 Park Street
St. Paul, MN 55103

Re: In the Matter of Proposed Rules Governing Underground Storage Tank Technical Standards, Minn. Rules ch. 7150.

Dear Ms. Nolte:

On May 21, 1991, the Minnesota Pollution Control Agency adopted the above-captioned rules governing underground storage tank technical standards, Minn. Rules ch. 7150. Enclosed for your review are the following:

1. Rules as adopted (original and three copies).

2. Findings of Fact, Conclusions, and Order Adopting Rules (two copies).

3. Certificate of Resolution Adopting Rules.

4. Notice of Intent to Solicit Outside Opinion (13 S.R. 1341, November 28, 1988).

5. Copies of written comments received pursuant to Notice of Intent to Solicit Outside Opinion.

6. Certificate of Authorizing Resolution.

7. Notice of Intent to Adopt Rules Without a Public Hearing and rules as proposed (15 S.R. 1810, February 19, 1991).

8. Comments received during the comment period.

9. Notice of Intent to Adopt Rules Without a Public Hearing as mailed, and State Register publication authorization form signed by the Commissioner.

10. Affidavit of Mailing the Notice of Intent to Adopt Rule Without a Public Hearing and Certificate of Mailing List.

Equal Opportunity Employer

Printed on Recycled Paper

11. Rules as proposed.

12. Statement of Need and Reasonableness.

13. Letter of transmittal of the Statement of Need and Reasonableness to the Legislative Commission to Review Administrative Rules.

14. Declaration of Counsel

Very truly yours,

ANN E. COHEN
Special Assistant
Attorney General

Environmental Protection Division

AEC:mah

STATE OF MINNESOTA
POLLUTION CONTROL AGENCY

In the Matter of the Proposed Permanent Rules Relating to Underground Storage Tanks, Minn. Rules Chapter 7150

FINDING OF FACT, CONCLUSIONS, AND ORDER ADOPTING RULES

The above-entitled matter came on for decision before the Minnesota Pollution Control Agency (MPCA) on the 21st day of May, 1991. After affording all interested persons the opportunity to present written and oral data, statements and arguments to the MPCA, in accordance with statutory requirements regarding the adoption of noncontroversial rules, after considering the Statement of Need and Reasonableness, after considering all of the evidence adduced upon the records, files and proceedings herein, the MPCA, being fully advised in the premises, hereby adopts the following Findings of Fact, Conclusions, and Order:

FINDINGS OF FACT

(1) 1. Notice of the MPCA's intent to adopt the above-entitled rules without a public hearing was published in the State Register on February 19, 1991. In addition, on February 14, 1991, a copy of the notice of the MPCA's intent to adopt rules without a public hearing was sent by mail to all persons on the list maintained by the Public Information and Education Office pursuant to Minn. Stat. §§ 14.14, subd. 1a and 14.22 (1990) and the mailing list maintained by the Tanks and Spills Section.

(2) 2. The Statement of Need and Reasonableness was prepared prior to mailing and publication of the notice and was made available to the public and the Legislative Commission to Review Administrative Rules.

(4) 3. All persons were given the opportunity to submit comments on the rule for 30 days after notice of proposed rulemaking. The 30-day comment period, as set out in the notice, expired on March 21, 1991.

(5) 4. No requests for public hearing were received during the comment period.

5. No requests for notice of submission to the Attorney General were received by the MPCA. (7)

(6) 6. During the comment period the MPCA staff received one written comment letter. In addition, the MPCA staff proposes to make six minor changes to the proposed rules. Therefore, the MPCA finds that a total of seven modifications to the proposed rules are justified by the record in this proceeding, as follows:

a. Minn. Rules pt. 7150.0030 subp. 2.

The MPCA staff commented that the definition of the term "aboveground release" is not used in the proposed rules. Therefore, the MPCA has deleted subp. 2 of Minn. Rules pt. 7150.0030 as follows:

Subp. 2. **Aboveground release.** (Deleted).

This change is reasonable and is not substantial because it is not necessary to define terms not used in proposed rules. The elements of this definition are contained in the definition of "release" in subp. 43 (to be renumbered as subp. 41).

b. Minn. Rules pt. 7150.0030 subp. 5.

The MPCA staff commented that the definition of the term "belowground release" is not used in the proposed rules. Therefore, the MPCA has deleted subp. 5 of Minn. Rules pt. 7150.0030 as follows:

Subp. 5. **Belowground release.** (Deleted).

This change is reasonable and is not substantial because it is not necessary to define terms not used in proposed rules. The elements of this definition are contained in the definition of "release" in subp. 43 (to be renumbered as subp. 41).

c. Minn. Rules pt. 7150.0030 subp. 24.

The MPCA staff commented that, under the definition of the term "hazardous material" there could be some misunderstanding among the regulated community as to the status of a regulated substance which meets both the definition of hazardous material and "petroleum" as defined in subp. 38 (to be renumbered as subp. 36). To clarify this point, the MPCA has amended subp. 24 of Minn. Rules pt. 7150.0030 to add a sentence as follows:

Subp. ~~24~~ 22. **Hazardous material.** "Hazardous material" means:

A. a substance listed in Code of Federal Regulations, title 49, section 172.101, including petroleum under subpart ~~38~~ 36, item C, but not including:

1. a hazardous waste listed or identified under chapter 7045 or Code of Federal Regulations, title 40, part 261;
2. petroleum under subpart ~~38~~ 36, item A, B, or D; or
3. a substance that is not liquid at a temperature of 60 degrees Fahrenheit and pressure of 14.7 pounds per inch absolute; or

B. any mixture of substances identified in item A and petroleum, unless the amount of the substance identified in item A is de minimus.

Substances identified in items A and B which also meet the definition of petroleum under subpart 36 are considered hazardous materials.

This change is reasonable and is not substantial because it clarifies the definition for the regulated community and further provides for the original intent of the definition.

d. Minn. Rules pt. 7150.0030 subp. 53.

The MPCA staff commented that the definition of the term "underground release" is not used in the proposed rules. Therefore, the MPCA has deleted subp. 53 of Minn. Rules pt. 7150.0030 as follows:

Subp. 53. **Underground release.** (Deleted).

This change is reasonable and is not substantial because it is not necessary to define terms not used in the proposed rules. The elements of this definition are contained in the definition of "release" in subp. 43 (to be renumbered as subp. 41).

e. Minn. Rules pt. 7150.0300 subp. 1.

On January 2, 1991, the U.S. Environmental Protection Agency (EPA) published an interim final rule amending the technical requirements for underground storage tanks at 40 CFR Part 280.40(a)(3) (1988) (Federal Register, Vol. 56, No. 1, pages 24-26, attached). Specifically, the EPA extended until September 22, 1991, the time frame underground tank owners and operators have to install automatic line leak detectors on new or existing underground pressurized piping systems without the minimum performance of this detection equipment having to meet requirements for a probability of detection of 0.95 and a probability of false alarm of 0.05. All pressurized piping must still have automatic line leak detectors, but the equipment does not have to meet the "95/5" performance criteria until September 22, 1991. Equipment installed prior to that date will not have to be upgraded.

The EPA cites two major reasons for making this change. The EPA intended to give equipment manufacturers sufficient time to evaluate their methods using published EPA protocols to prove they meet the standards in the rule. The originally published date in 40 CFR Part 280 for line leak detection equipment to meet the "95/5" performance criteria was December 22, 1990. However, because of delays in development of the protocol for pipeline leak detection systems until September 1990, manufacturers were given a very limited time to make the necessary arrangements for evaluating the performance of their methods. In addition, the EPA received several comments raising technical concerns about the protocol itself, which the EPA is currently evaluating for possible protocol revision. The EPA was concerned that some key manufacturers of line leak detection equipment (of which there are very few), through no apparent fault of their own, might temporarily withdraw a major portion of the currently available detectors from the market place, leading to widespread noncompliance by tank owners and operators as well as unintended detrimental impacts to the environment and public health.

The MPCA concurs and has amended Minn. Rules pt. 7150.0300 subp. 1 as follows:

Subpart 1. **Methods.** Owners and operators of new and existing underground storage tank systems must provide a method, or combination of methods, of release detection that:

A. (Unchanged).
B. (Unchanged).
C. ~~Meets the performance requirements in part 7150.0330 or 7150.0340, with any performance claims and their manner of determination described in writing by the equipment manufacturer or installer. In addition, all methods must be capable of detecting the leak rate or quantity specified for that method in part 7150.0330, item B to E; or 7150.0340, items A and B, with a probability of detection of 0.95 and a probability of false alarm of 0.05.~~ Meets the performance standards in part 7150.0330 or 7150.0340. The performance of release detection equipment must be documented with written specifications supplied by the equipment manufacturer or installer. In addition, methods used after the date shown in the following table, except for methods permanently installed prior to that date, must be capable of detecting the leak rate or quantity specified for that method in the part of thee rules listed in the table with a probability of detection of 0.95 and a probability of false alarm of 0.05:

Method	Part	Date
Manual tank gauging	7150.0330 items B, and C	December 22, 1990
Tank tightness testing	7150.0330 item D	December 22, 1990
Automatic tank gauging	7150.0330 item E	December 22, 1990
Automatic line leak detection	7150.0340 item A	September 22, 1991
Line tightness testing	7150.0340 item B	December 22, 1990

This change is reasonable because it recognizes problems which have occurred with development of leak detection protocols for pressurized underground storage tank piping systems and gives the regulated community additional time to comply. It is not substantial because it does not impose new requirements on the regulated community and will help insure that there will be sufficient time for equipment manufacturers to make necessary changes and market equipment which will not cause unintended detrimental impacts to the environment and public health.

f. Minn. Rules pt. 7150.0330, item G.

The single written comment letter received by the MPCA (attached) proposed a change to ground water monitoring well locational requirements. Since monitoring wells that associated with underground storage tank sites must occasionally be placed in a right-of-way controlled by a local jurisdiction, a recognition that local approvals or permits may be needed should be made. The MPCA concurs and has amended item G of Minn. Rules pt. 7150.0330 as follows:

G. Testing or monitoring for liquids in the ground water must meet the provisions of chapter 4725, must comply with local approvals or permits when located within a local public right-of-way, as well as meet the following requirements:

(1)-(8) (Unchanged).

This change is reasonable because it recognizes that local jurisdictions such as cities and counties control access to highways and other right-of-ways which may contain buried hazards such as sewer lines and utilities. Local approval and permit programs assess these situations and may help prevent threats to public health and the environment in those occasional instances when it may be necessary to locate a ground water well in such a right-of-way in order to do compliance monitoring on an underground storage tank site. It is not a substantial change because it will occur infrequently and will not result in increased cost or inconvenience to the regulated community because it is not a new requirement, just a reminder of existing programs. In turn, the level of environmental protection and public health and safety will be increased.

g. Minn. Rules pt. 7150.0500, subp. 2, item I.

The MPCA staff commented that the Steel Tank Institute which has published standards that are referenced in the proposed rules has moved to a new address. The MPCA has amended item I of Minn. Rules pt. 7150.0500, subp. 2 as follows:

I. Steel Tank Institute, ~~720 Anthony Trail~~ 570 Oakwood Road, ~~Northbrook~~ Lake Zurich, Illinois ~~60062~~ 60047.

This change is reasonable and is not substantial because it merely corrects and updates the proposed rule to reflect a recent address change.

7. The MPCA adopts the Statement of Need and Reasonableness, in its entirety, as the factual basis for the proposed rules. The MPCA hereby incorporates the Statement of Need and Reasonableness into these findings, except as modified in Finding No. 6 above.

(8)

8. The above-captioned rule is needed and reasonable.

CONCLUSIONS

1. The Minnesota Pollution Control Agency duly acquired and has jurisdiction over this proceeding.

2. The Minnesota Pollution Control Agency published and served due, timely, and adequate notice of the intent to adopt rules without a public hearing.

3. All relevant legal and procedural requirements of statute and rule have been complied with.

4. The modifications to the proposed rules are supported by the record and do not result in a substantial change in the proposed rules.

ORDER

NOW, THEREFORE, IT IS ORDERED, that the attached Minn. Rules pts. 7150.0010 to 7150.0500 governing technical standards for underground storage tanks are adopted pursuant to the authority vested in the Minnesota Pollution Control Agency by Minn. Stat. § 116.49 (1990).

MINNESOTA POLLUTION CONTROL AGENCY

(9)

5/22/91
Dated

Patricia A. Sloan for
Charles W. Williams
Commissioner

STATE OF MINNESOTA
POLLUTION CONTROL AGENCY

In the Matter of the Proposed Permanent Rules Relating to Underground Storage Tanks, Minn. Rules Chapter 7150

FINDING OF FACT, CONCLUSIONS, AND ORDER ADOPTING RULES

The above-entitled matter came on for decision before the Minnesota Pollution Control Agency (MPCA) on the 21st day of May, 1991. After affording all interested persons the opportunity to present written and oral data, statements and arguments to the MPCA, in accordance with statutory requirements regarding the adoption of noncontroversial rules, after considering the Statement of Need and Reasonableness, after considering all of the evidence adduced upon the records, files and proceedings herein, the MPCA, being fully advised in the premises, hereby adopts the following Findings of Fact, Conclusions, and Order:

FINDINGS OF FACT

1. Notice of the MPCA's intent to adopt the above-entitled rules without a public hearing was published in the State Register on February 19, 1991. In addition, on February 14, 1991, a copy of the notice of the MPCA's intent to adopt rules without a public hearing was sent by mail to all persons on the list maintained by the Public Information and Education Office pursuant to Minn. Stat. §§ 14.14, subd. 1a and 14.22 (1990) and the mailing list maintained by the Tanks and Spills Section.

2. The Statement of Need and Reasonableness was prepared prior to mailing and publication of the notice and was made available to the public and the Legislative Commission to Review Administrative Rules.

3. All persons were given the opportunity to submit comments on the rule for 30 days after notice of proposed rulemaking. The 30-day comment period, as set out in the notice, expired on March 21, 1991.

4. No requests for public hearing were received during the comment period.

5. No requests for notice of submission to the Attorney General were received by the MPCA.

6. During the comment period the MPCA staff received one written comment letter. In addition, the MPCA staff proposes to make six minor changes to the proposed rules. Therefore, the MPCA finds that a total of seven modifications to the proposed rules are justified by the record in this proceeding, as follows:

   a. Minn. Rules pt. 7150.0030 subp. 2.

The MPCA staff commented that the definition of the term "aboveground release" is not used in the proposed rules. Therefore, the MPCA has deleted subp. 2 of Minn. Rules pt. 7150.0030 as follows:

Subp. 2. **Aboveground release.** (Deleted).

This change is reasonable and is not substantial because it is not necessary to define terms not used in proposed rules. The elements of this definition are contained in the definition of "release" in subp. 43 (to be renumbered as subp. 41).

b. Minn. Rules pt. 7150.0030 subp. 5.

The MPCA staff commented that the definition of the term "belowground release" is not used in the proposed rules. Therefore, the MPCA has deleted subp. 5 of Minn. Rules pt. 7150.0030 as follows:

Subp. 5. **Belowground release.** (Deleted).

This change is reasonable and is not substantial because it is not necessary to define terms not used in proposed rules. The elements of this definition are contained in the definition of "release" in subp. 43 (to be renumbered as subp. 41).

c. Minn. Rules pt. 7150.0030 subp. 24.

The MPCA staff commented that, under the definition of the term "hazardous material" there could be some misunderstanding among the regulated community as to the status of a regulated substance which meets both the definition of hazardous material and "petroleum" as defined in subp. 38 (to be renumbered as subp. 36). To clarify this point, the MPCA has amended subp. 24 of Minn. Rules pt. 7150.0030 to add a sentence as follows:

Subp. ~~24~~ 22. **Hazardous material.** "Hazardous material" means:

A. a substance listed in Code of Federal Regulations, title 49, section 172.101, including petroleum under subpart ~~38~~ 36, item C, but not including:

1. a hazardous waste listed or identified under chapter 7045 or Code of Federal Regulations, title 40, part 261;
2. petroleum under subpart ~~38~~ 36, item A, B, or D; or
3. a substance that is not liquid at a temperature of 60 degrees Fahrenheit and pressure of 14.7 pounds per inch absolute; or

B. any mixture of substances identified in item A and petroleum, unless the amount of the substance identified in item A is de minimus.

Substances identified in items A and B which also meet the definition of petroleum under subpart 36 are considered hazardous materials.

This change is reasonable and is not substantial because it clarifies the definition for the regulated community and further provides for the original intent of the definition.

d. Minn. Rules pt. 7150.0030 subp. 53.

The MPCA staff commented that the definition of the term "underground release" is not used in the proposed rules. Therefore, the MPCA has deleted subp. 53 of Minn. Rules pt. 7150.0030 as follows:

Subp. 53. **Underground release.** (Deleted).

This change is reasonable and is not substantial because it is not necessary to define terms not used in the proposed rules. The elements of this definition are contained in the definition of "release" in subp. 43 (to be renumbered as subp. 41).

e. Minn. Rules pt. 7150.0300 subp. 1.

On January 2, 1991, the U.S. Environmental Protection Agency (EPA) published an interim final rule amending the technical requirements for underground storage tanks at 40 CFR Part 280.40(a)(3) (1988) (Federal Register, Vol. 56, No. 1, pages 24-26, attached). Specifically, the EPA extended until September 22, 1991, the time frame underground tank owners and operators have to install automatic line leak detectors on new or existing underground pressurized piping systems without the minimum performance of this detection equipment having to meet requirements for a probability of detection of 0.95 and a probability of false alarm of 0.05. All pressurized piping must still have automatic line leak detectors, but the equipment does not have to meet the "95/5" performance criteria until September 22, 1991. Equipment installed prior to that date will not have to be upgraded.

The EPA cites two major reasons for making this change. The EPA intended to give equipment manufacturers sufficient time to evaluate their methods using published EPA protocols to prove they meet the standards in the rule. The originally published date in 40 CFR Part 280 for line leak detection equipment to meet the "95/5" performance criteria was December 22, 1990. However, because of delays in development of the protocol for pipeline leak detection systems until September 1990, manufacturers were given a very limited time to make the necessary arrangements for evaluating the performance of their methods. In addition, the EPA received several comments raising technical concerns about the protocol itself, which the EPA is currently evaluating for possible protocol revision. The EPA was concerned that some key manufacturers of line leak detection equipment (of which there are very few), through no apparent fault of their own, might temporarily withdraw a major portion of the currently available detectors from the market place, leading to widespread noncompliance by tank owners and operators as well as unintended detrimental impacts to the environment and public health.

The MPCA concurs and has amended Minn. Rules pt. 7150.0300 subp. 1 as follows:

Subpart 1. **Methods.** Owners and operators of new and existing underground storage tank systems must provide a method, or combination of methods, of release detection that:

A. (Unchanged).
B. (Unchanged).
C. ~~Meets the performance requirements in part 7150.0330 or 7150.0340, with any performance claims and their manner of determination described in writing by the equipment manufacturer or installer. In addition, all methods must be capable of detecting the leak rate or quantity specified for that method in part 7150.0330, item B to E; or 7150.0340, items A and B, with a probability of detection of 0.95 and a probability of false alarm of 0.05.~~ Meets the performance standards in part 7150.0330 or 7150.0340. The performance of release detection equipment must be documented with written specifications supplied by the equipment manufacturer or installer. In addition, methods used after the date shown in the following table, except for methods permanently installed prior to that date, must be capable of detecting the leak rate or quantity specified for that method in the part of thee rules listed in the table with a probability of detection of 0.95 and a probability of false alarm of 0.05:

Method	Part	Date
Manual tank gauging	7150.0330 items B, and C	December 22, 1990
Tank tightness testing	7150.0330 item D	December 22, 1990
Automatic tank gauging	7150.0330 item E	December 22, 1990
Automatic line leak detection	7150.0340 item A	September 22, 1991
Line tightness testing	7150.0340 item B	December 22, 1990

This change is reasonable because it recognizes problems which have occurred with development of leak detection protocols for pressurized underground storage tank piping systems and gives the regulated community additional time to comply. It is not substantial because it does not impose new requirements on the regulated community and will help insure that there will be sufficient time for equipment manufacturers to make necessary changes and market equipment which will not cause unintended detrimental impacts to the environment and public health.

f. Minn. Rules pt. 7150.0330, item G.

The single written comment letter received by the MPCA (attached) proposed a change to ground water monitoring well locational requirements. Since monitoring wells that associated with underground storage tank sites must occasionally be placed in a right-of-way controlled by a local jurisdiction, a recognition that local approvals or permits may be needed should be made. The MPCA concurs and has amended item G of Minn. Rules pt. 7150.0330 as follows:

G. Testing or monitoring for liquids in the ground water must meet the provisions of chapter 4725, must comply with local approvals or permits when located within a local public right-of-way, as well as meet the following requirements:

(1)-(8) (Unchanged).

This change is reasonable because it recognizes that local jurisdictions such as cities and counties control access to highways and other right-of-ways which may contain buried hazards such as sewer lines and utilities. Local approval and permit programs assess these situations and may help prevent threats to public health and the environment in those occasional instances when it may be necessary to locate a ground water well in such a right-of-way in order to do compliance monitoring on an underground storage tank site. It is not a substantial change because it will occur infrequently and will not result in increased cost or inconvenience to the regulated community because it is not a new requirement, just a reminder of existing programs. In turn, the level of environmental protection and public health and safety will be increased.

g. Minn. Rules pt. 7150.0500, subp. 2, item I.

The MPCA staff commented that the Steel Tank Institute which has published standards that are referenced in the proposed rules has moved to a new address. The MPCA has amended item I of Minn. Rules pt. 7150.0500, subp. 2 as follows:

I. Steel Tank Institute, ~~720 Anthony Trail~~ 570 Oakwood Road, ~~Northbrook~~ Lake Zurich, Illinois ~~60062~~ 60047.

This change is reasonable and is not substantial because it merely corrects and updates the proposed rule to reflect a recent address change.

7. The MPCA adopts the Statement of Need and Reasonableness, in its entirety, as the factual basis for the proposed rules. The MPCA hereby incorporates the Statement of Need and Reasonableness into these findings, except as modified in Finding No. 6 above.

8. The above-captioned rule is needed and reasonable.

CONCLUSIONS

1. The Minnesota Pollution Control Agency duly acquired and has jurisdiction over this proceeding.

2. The Minnesota Pollution Control Agency published and served due, timely, and adequate notice of the intent to adopt rules without a public hearing.

3. All relevant legal and procedural requirements of statute and rule have been complied with.

4. The modifications to the proposed rules are supported by the record and do not result in a substantial change in the proposed rules.

ORDER

NOW, THEREFORE, IT IS ORDERED, that the attached Minn. Rules pts. 7150.0010 to 7150.0500 governing technical standards for underground storage tanks are adopted pursuant to the authority vested in the Minnesota Pollution Control Agency by Minn. Stat. § 116.49 (1990).

MINNESOTA POLLUTION CONTROL AGENCY

5/22/91
Dated

Patricia A. Bloomgren for
Charles W. Williams
Commissioner

STATE OF MINNESOTA
POLLUTION CONTROL AGENCY

In the matter of the Proposed Technical Standards for Owners and Operators of Underground Storage Tanks, Minnesota Rules Chapter 7150.

STATEMENT OF NEED AND REASONABLENESS

Minnesota Pollution Control Agency
520 Lafayette Road
St. Paul, Minnesota 55155

Table of Contents

	Title	Page
I.	Introduction	1
II.	Statement of Minnesota Pollution Control Agency's Statutory Authority	2
III.	Statement of Need	3
IV.	Statement of Reasonableness	6
V.	Small Business Considerations in Rulemaking	81
VI.	Considerations of Economic Factors	85
VII.	Conclusion	87
VIII.	List of Exhibits	87

I. INTRODUCTION

The Minnesota Pollution Control Agency (MPCA) was authorized and directed by the 1987 Minnesota Legislature to adopt rules applicable to all owners and operators of underground storage tanks (USTs). The rules must establish the safeguards necessary to protect human health and the environment. On September 23, 1988, the U.S. Environmental Protection Agency (EPA) published its final rule outlining technical requirements for USTs and state UST program approval in 40 CFR Part 280. The rule took effect 90 days after publication on December 22, 1988.

On October 18-19, 1988, the MPCA and EPA held jointly-sponsored public meetings in St. Paul and Brainerd. The purpose of the meetings was to explain the requirements of the new rule and to give members of the public an opportunity to ask questions of state and federal UST staff. On November 28, 1988, the MPCA published a "Notice of Intent to Solicit Outside Opinion" on the development of the UST technical rule for Minnesota. The stated intent was to base the rule on EPA's technical standards and corrective action requirements.

The notice was sent to all persons on the MPCA's mailing list of persons interested in new UST rules. It was also sent to individuals and groups on the mailing list maintained by the MPCA's Public Information Office. The majority of commenters urged the MPCA to adopt the federal rule as published. Based on comments received during the notice period a proposed rule was prepared which is essentially the same as the current federal UST technical standards. Because development of criteria for the corrective action portions of the rule will require additional time, the MPCA will work with members of the regulated community to develop adequate corrective action standards for a future rulemaking.

The major difference between the proposed technical rules and the EPA rules is the issue of the regulation of heating oil tanks. Heating oil tanks which the MPCA has the authority to regulate under Minn. Stat. §§ 116.46-116.50 (1990), but which are exempt from regulation in EPA's 40 CFR Part 280, have not been brought in under the proposed rule to any extent greater than they are already regulated under state law. Due to the differences in technical procedures for release detection monitoring and regulatory status of consumptive-use heating oil tanks, it has been decided to pursue regulation of only federally-regulated USTs at this time.

The proposed rule establishes technical standards and safeguards necessary to protect human health and the environment and include the following areas: 1) design, construction, installation and notification of UST systems; 2) general operating requirements; 3) release detection requirements; and 4) closure of UST systems. Regulated substances include petroleum products as well as certain hazardous materials.

II. STATEMENT OF MPCA'S STATUTORY AUTHORITY

The MPCA's statutory authority to adopt the proposed rule is set forth in Minn. Stat. § 116.49 (1990), which provides:

Subdivision 1. Rules. The agency must adopt rules applicable to all owners and operators of underground storage tanks. The rules must establish the safeguards necessary to protect human health and the environment. The agency may delay adopting the rules until the United States Environmental Protection Agency proposes regulations for regulated substances, as defined in section 116.46, subdivision 6, clause (1). The agency shall delay adopting the rules for regulated substances as defined in section 116.46, subdivision 6, clause (2), until the United States Environmental Protection Agency publishes final

regulations for underground storage tanks, or February 8, 1987, whichever is earlier.

The MPCA also has general authority to adopt rules to control water pollution, including rules prohibiting the storage of any liquid in a manner that could pollute the waters, under Minn. Stat. § 115.03, subd. 1(e) (1990). Under the above statutes, the MPCA has the necessary statutory authority to adopt the proposed rule.

III. STATEMENT OF NEED

Minn. Stat. § 14.14, subd. 2 and § 14.23 (1990) require the MPCA to make an affirmative presentation of facts establishing the need for and the reasonableness of the proposed rules. In general terms, this means that the MPCA must set forth the reasons for proposing rules and the reasons must not be arbitrary or capricious. However, to the extent that the need and reasonableness are separate, need has come to mean that a problem exists which requires administrative attention, and reasonableness means that the solution proposed by the MPCA is a proper one. The need for the rules is discussed below.

The need for these rules arises from the following sources:

1. The need to protect public health and safety and the environment from tank releases in compliance with the UST technical requirements established by EPA at 40 CFR Part 280.
2. The need to comply with the directive of Minn. Stat. § 116.49 (1990).

It is estimated that there are three to five million USTs in the United States. Over 36,000 of these tanks are registered in Minnesota. Leaks and spills from USTs can have serious health and environmental consequences. Fires and explosions have occurred during the improper removal of tanks and when

vapors from leaking tanks have entered sewers and basements. City and private water supply wells have been contaminated by leaking USTs.

On September 23, 1988, the EPA published its final rule establishing technical requirements for USTs and state UST program approval, codified at 40 CFR Part 280. This was followed on October 26, 1988, by financial responsibility requirements for UST owners, also part of 40 CFR Part 280. The EPA estimates that about 1.7 million USTs are affected by these requirements including 676,000 USTs for storing petroleum at retail motor fuel marketing outlets, 651,000 USTs for storing petroleum for other uses (i.e., fleet use and construction), 330,000 USTs for storing used oil, and 54,000 USTs for storing hazardous chemicals. In all, more than 500,000 facilities are affected by the rule. In Minnesota, over 15,000 UST facilities are regulated, including sites where fuel oil is used on the premises as a primary or backup source of heat. Currently, these heating oil tank sites are not regulated by 40 CFR Part 280, although authority has been provided to MPCA to regulate these tanks in Minn. Stat. § 116.47 (1990), if they are over 1,100 gallons in size.

The preamble to the EPA's rules (53 Federal Register, 37082 (1987) and following) describes the scope of the problem created by leaking USTs. The EPA concluded "that approximately 25 percent of existing UST systems are found to be non-tight when tested using current methods and that loose tank fittings or faulty piping causes 84 percent of these tightness test failures" (53 Federal Register, 37086 (1987)). The major causes of releases from UST systems are due to failures of unprotected tanks, leaks in delivery lines, leaks from vent pipes and fittings on top of the tank, and spill and overfill errors. Piping releases occur twice as often as releases from the tank portion of an UST system. The EPA rule requires that both new tanks and their piping be equipped with corrosion protection, leak detection, and spill and overfill devices. For

existing UST systems, timetables are established for installation of these protective measures.

According to the preamble, the requirements in the final rule for leak detection and prevention will provide society with a variety of benefits. The benefits include reductions in damages under the rule in comparison to the case without the rule. Two kinds of damages may occur as a result of leaking USTs: those that occur before a release is detected, such as contamination of private and public wells, and those that occur after a release is detected, such as contamination of soil and ground water.

ICF Incorporated (1988) has estimated for the EPA the damages nationwide from leaking USTs occurring prior to detection. Without release detection, costs attributable to damages from leaking USTs are estimated at $4.8 billion. Counting only the costs attributable to contaminated wells and damage to structures caused by the migration of volatile components (for example, explosions of accumulated gasoline fumes), the damages under the final rule are estimated to be $2.1 billion. The incremental benefits of regulation resulting from this decrease in pre-detection damages are therefore $2.7 billion.

Post-detection damages are estimated to be $52.8 billion under the base case and negligible under the UST rule. The value of post-detection damages in the base case was estimated to be at least as high as the cost of the corrective action that would be needed to meet the requirements of the technical standards. Under Minn. Stat. § 115.061, corrective actions must be taken as soon as a release is detected, so that post-detection costs are expected to be minimal. Therefore, the total incremental benefits of regulation resulting from a decrease in post-detection damages are $52.8 billion. The average benefit for each UST regulated is estimated to be $31,000 (ICF Inc., 1988).

The Minnesota Legislature recognized the need to develop a program to establish safeguards necessary to protect human health and the environment as a result of the ownership and operation of USTs. Minn. Stat. §§ 116.46-116.50 (1990) were adopted to meet this need. Minn. Stat. § 116.49 (1990) directs the MPCA to adopt rules applicable to all UST owners and operators. The MPCA was directed to delay adopting rules for petroleum USTs until the EPA published final regulations or February 8, 1987, whichever was earlier. In addition, the MPCA was given the discretion of delaying the adoption of rules relating to USTs storing hazardous substances until the EPA published rules for design and operation of these USTs. As it became apparent that the EPA would elect to publish one set of rules to address both petroleum and hazardous substance USTs, the MPCA decided to wait until the final EPA rule was published before proposing UST rules for Minnesota. In order for the MPCA to comply with the directive of Minn. Stat. § 116.49 (1990), there is a need for the MPCA to adopt rules to establish and administer a set of technical standards for owners and operators of UST systems in Minnesota. Corrective action criteria will be developed through a future rulemaking.

IV. STATEMENT OF REASONABLENESS

The MPCA is required by Minn. Stat. §§ 14.14, subd. 2 and and 14.23 (1990) to make an affirmative presentation of facts establishing the reasonableness of the proposed rules. It means that there is a rational basis for the MPCA's proposed action. The reasonableness of the proposed rules is discussed below.

A. Reasonableness of the Rules as a Whole

The rulemaking authority set forth in Minn. Stat. § 116.49 (1990) is very broad. The MPCA is directed to adopt rules applicable to all owners and operators of USTs and the rules must establish the safeguards necessary to

protect human health and the environment. The rules published by the EPA at 40 CFR Part 280 do establish technical standards and safeguards necessary to protect human health and the environment in the following areas: 1) design, construction, installation and notification of UST systems; 2) general operating requirements; 3) release detection requirements; and 4) closure of UST systems. Regulated substances include petroleum products as well as certain hazardous materials.

The EPA has provided extensive documentation of the need for and reasonableness of its UST technical rule in the background and analysis of the proposed and final rules and that documentation is hereby adopted by reference as support for these rules ((52 Federal Register, 12662-12769 (1987) and (53 Federal Register, 37082-37194 (1988)(refer to Exhibits 1 and 2)). Since the MPCA proposes to adopt the major elements of the EPA UST technical rule, the emphasis of this statement of reasonableness will be on differences between the EPA rule and the MPCA proposal and the reasons for those differences. In developing the proposed rule, the MPCA has followed the federal model, while at the same time addressing the general mandate of the statutes. The proposed rule has been drafted to be consistent with program requirements specified in Minn. Stat. §§ 116.46 to 116.50 (1990). This approach to addressing the need for an UST technical rule in Minnesota is therefore reasonable.

B. Reasonableness of Individual Rules

The following discussion addresses specific provisions of the proposed rule. Form requirements of the Office of the Reviser of Statutes (1984) have been followed. This has required that untitled subparts of the EPA rule be given headings and that the hierarchy for numbering and lettering of divisions of parts be followed. Where content of a subpart of the proposed rule is the same as the EPA rule, this fact will be noted in the following discussion and the

subpart will be cross-referenced to the applicable article of 40 CFR Part 280.

Program Scope and Interim Standards

Part 7150.0010 Applicability

This part explains the application of the proposed rule to UST systems. (40 CFR Part 280.10(a)).

Subpart 1. Scope. This subpart states that the proposed rule applies to all owners and operators of UST systems as defined by the definitions, except as provided by the exclusions and the deferrals subparts. This is reasonable because it defines the limits of the program for the regulated community.

Subpart 2. Exclusions. This subpart lists those UST systems which are excluded from the proposed rule.

2.A. UST systems storing hazardous wastes are exempt from this proposed rule because they are regulated under other state (Minn. Rules ch. 7045 (1990)) and federal (40 CFR Part 261 (1989)) law. This exemption is reasonable because the inclusion of hazardous wastes as a part of this rule would be duplicative and confusing to the regulated community.

2.B. Wastewater treatment UST systems that are part of a regulated wastewater treatment facility are exempt from the proposed rule to the extent that they are regulated under 33 USC, Sections 1317 or 1342 [1987 & Supp. 1989]. This exemption is reasonable because the inclusion of wastewater treatment UST systems as a part of this rule would be duplicative and confusing to the regulated community.

2.C. through 2.F. Tanks listed in 40 CFR Part 280.10(b)(3)-(6) are also excluded from the proposed rule. Many of these tanks are small or contain limited amounts of regulated substances. Some, such as hydraulic lift tanks,

have "built-in" release detection in that the equipment they power will not work properly if they leak, so it is reasonable that they be excluded.

2.G. through 2.N. These exclusions appear in the EPA rule at 40 CFR Part 280.12, within the definition of "underground storage tank." It is more logical and consistent to specify all excluded UST systems in one place in the proposed rule, therefore they have been moved to this subpart. Several differences which are required by Minn. Stat. § 116.47 (1990) (Exemptions) have been incorporated here. These are: 1) the inclusion of UST systems of more than 1,100 gallons capacity used for storing heating oil for consumptive use on the premises where stored; 2) the elimination of liquid traps or associated gathering lines directly related to oil or gas production because there are no such facilities in Minnesota; and 3) a minor wording change for clarity in 2.N. (replace "situated on" with "located upon").

Subpart 3. Deferrals. This subpart lists those UST systems which are deferred from all except the Program Scope and Interim Standards (parts 7150.0010 to 7150.0030) portion of the proposed rule. The proposed rule would defer the same population of tanks as are deferred from the EPA rule. Examples include airport hydrant fuel distribution systems and UST systems with field-constructed tanks. The EPA is studying what, if any, design, construction, installation, notification, release detection and closure standards should apply to these tanks. If such a tank should leak, it is still subject to the same release reporting and corrective action requirements which apply to other regulated tanks under Minn. Stat. § 115.061. Likewise, interim operating standards have been established for these tanks in the proposed rule under Minn. Rules pt. 7150.0020 (40 CFR Part 280.11).

Subpart 4. Release detection deferrals. This subpart defers UST systems storing fuel solely for use by emergency power generators from the release detection requirements of Minn. Rules pts. 7150.0300 to 7150.0350 (40 CFR Parts 280.40 to 280.45 (1988)). Since these tanks operate intermittently and are often in remote locations (i.e., along utility lines) where they are visited infrequently, it is reasonable that they be deferred from release detection requirements. The EPA will continue to study this issue.

Subpart 5. Heating oil underground storage tank deferrals. This subpart defers UST systems of over 1,100 gallons capacity used exclusively for storing heating oil for consumptive use on the premises where stored from most of the requirements of this rule. The parts which apply include notification requirements for new tanks, changes-in-service, and sales of property containing tanks (part 7150.0120, subparts 2 and 6). Releases from heating oil tanks must still be promptly reported and cleaned up. The existing authority of Minn. Stat. § 115.061 (1990) requires this. Eligible owners and operators of USTs containing heating oil are covered by requirements of the petroleum tank release cleanup act, Minn. Stat. ch. 115C (1990). It is reasonable that basic notification requirements for tank installation, changes-in-service, and property transfers apply to heating oil USTs regulated under state law. This is already mandated by Minn. Stat. §§ 116.46-116.50 (1990). Because of differences in technical procedures for release detection monitoring and issues concerning the regulatory status of consumptive-use heating oil USTs at the federal level, it is reasonable that the MPCA staff continues to research the issue of heating oil tank regulation and provides a forum for discussion of heating oil tank issues at a later date.

Part 7150.0020 Interim Standards for Deferred UST Systems

Subpart 1. Interim standards. This subpart lists the interim standards which apply to UST systems deferred from certain requirements of the proposed rule as discussed at part 7150.0010 above. These standards establish baseline criteria which all UST systems should meet to protect public health and safety and the environment. It is reasonable that these standards be in place until the EPA acquires adequate information on these tanks to justify establishment of final standards.

1.A. This interim standard requires UST systems to be installed according to American Petroleum Institute Bulletin 1615 (1987) and is consistent with the mandate of Minn. Stat. § 116.49 subd. 2(1) (1990).

1.B. through 1.D. These requirements are the same as 40 CFR Parts 280.11 (a)(1) through (3) (1988) and are consistent with the mandate of Minn. Stat. § 116.49 (1990).

Subpart 2. Systems without corrosion protection. The MPCA agrees with the requirements of the federal rule at 40 CFR Part 280.11(b). UST systems installed without corrosion protection at sites determined by a corrosion expert not to be corrosive enough to have a release due to corrosion during their operating life must have been so determined using a code of practice of the National Association of Corrosion Engineers (NACE) as listed in the rule. High water table conditions and presence of corrosive soils in Minnesota dictate that this will be a seldom-used alternative by tank owners. It is reasonable, however, that when it is chosen, the standards of NACE apply to the installation.

Part 7150.0030 Definitions

This part of the proposed rule sets forth definitions of key words or phrases used within the rule. The definitions are discussed below.

Subpart 1. Scope. This subpart states that the definitions in Minn. Stat. §§ 115C.02 and 116.46 (1990) apply to the terms used in this proposed rule, unless the terms are expressly defined in this part. Because all of these chapters apply to the Minnesota storage tank program, it is reasonable to use the same definitions throughout the program in order to achieve consistency within the program.

Subpart 2. Aboveground release. "Aboveground release" is defined as a release to the land surface or to surface water, including, but not limited to, releases from the aboveground part of an UST system and aboveground releases associated with overfills and transfer operations as a regulated substance moves to or from an UST system. It is reasonable to define this term since the rule requires corrective action for this type of release. See also definitions of "release" and "belowground release." The MPCA adopts the definition of the federal rule at 40 CFR Part 280.12.

Subpart 3. Agency. "Agency" is defined in the proposed rule as the Minnesota Pollution Control Agency. It is reasonable to define this term in order to define which agency of the state of Minnesota is responsible for program implementation.

Subpart 4. Appurtenances. Refer also to 40 CFR Part 280.12, "ancillary equipment." "Appurtenances" are defined as those pipes, fittings, flanges, valves, and pumps used to distribute, meter, or control the flow of regulated substances to or from an UST. The proposed rule uses the term "appurtenances" instead of the federal term, "ancillary equipment," in order to be consistent with usage in Minn. Stat. § 116.46 (1990). It is reasonable to define this term to describe that part of the UST system, other than the tank vessel itself, to which the rule applies. Appurtenances are a frequent source of leaks in

improperly installed or maintained UST systems. The MPCA adopts the definition of the federal rule at 40 CFR Part 280.12, "ancillary equipment."

Subpart 5. Belowground release. "Belowground release" is defined as a release below the land surface or to ground water, including, but not limited to, releases from the belowground parts of an UST system and belowground releases associated with overfills and transfer operations as a regulated substance moves to or from an UST system. It is reasonable to define this term since the rule requires corrective action for this type of release. See also definitions of "release" and "aboveground release." The MPCA adopts the definition of the federal rule at 40 CFR Part 280.12.

Subpart 6. Beneath the surface of the ground. "Beneath the surface of the ground" means beneath the ground surface or otherwise covered by earthen materials. It is reasonable to define this term because the proposed rule establishes requirements for UST systems, which are defined as being ten percent or more beneath the surface of the ground. See "underground storage tank" and "UST system." The MPCA adopts the definition of the federal rule at 40 CFR Part 280.12.

Subpart 7. Cathodic protection. "Cathodic protection" is defined as the primary means of preventing corrosion of a metal surface by making that surface the cathode of an electrochemical cell. An UST system can be cathodically protected through the application of either galvanic anodes or impressed current. It is reasonable to define cathodic protection because it is the primary method of preventing corrosion in metal tanks and pipes, thereby keeping them from leaking. The MPCA adopts the definition of the federal rule at 40 CFR Part 280.12.

Subpart 8. Cathodic protection tester. The MPCA adopts the definition of the federal rule at 40 CFR Part 280.12. A "cathodic protection tester" is

defined as a person who can demonstrate an understanding of the principles of all common types of cathodic protection systems as applied to buried or submerged metal piping and tank systems. Such persons must have education and experience in soil resistivity, stray current, structure-to-soil potential, and electrical isolation measurements of buried metal piping and tank systems. It is reasonable to define general requirements and qualifications of cathodic protection testers because their measurements and reports are an important part of determining whether metallic UST systems are protecting the environment.

Subpart 9. Change in service. "Change in service" has been defined in the proposed rule to clarify for owners and operators when they must notify the MPCA when making changes to their UST systems. A change in service includes both changes in status as defined by Minn. Stat. § 116.48, subd. 3 (1990) or an UST upgrade under this rule, subp. 55.

Subpart 10. Closure or removal. "Closure" or "removal" has been defined in Minn. Rules pt. 7105.0010, subp. 7 (State Register, January 8, 1990) and is further clarified here so UST owners and operators will know what is meant by these terms which are used interchangeably. Subpart 7 of part 7105.0010 seems to require this clarification since it defines the terms "as required by 40 CFR Part 280, or its counterpart in Minnesota rules when adopted." Since closure and removal are not defined in 40 CFR Part 280, the state definition as previously cited is referenced here.

Subpart 11. Commissioner. "Commissioner" means the commissioner of the Minnesota Pollution Control Agency. It is the official title of the MPCA's chief executive officer. Through the commissioner, MPCA is charged with implementing the UST rule.

(Note: The definition for "CERCLA" (the Comprehensive Environmental Response Compensation and Liability Act) in the federal rule has been omitted because it is not cited in the proposed state rule.)

Subpart 12. Compatible. Two or more substances are "compatible" if they maintain their respective physical and chemical properties upon contact with one another for the design life of the UST system under conditions which are likely to be encountered in the tank. It is reasonable that this term be defined because compatibility is an important factor in UST system integrity and design considerations. The MPCA adopts the definition of the federal rule at 40 CFR Part 280.12.

Subpart 13. Connected piping. "Connected piping" means underground piping including valves, elbows, joints, flanges, and flexible connectors attached to a tank through which regulated substances flow. Piping that joins two UST systems is allocated equally between them. It is reasonable that this term be defined because over half of all leak incidents are due to piping system failures and not from tanks. The MPCA adopts the definition of the federal rule at 40 CFR Part 280.12.

Subpart 14. Consumptive use. "Consumptive use" with respect to heating oil, means consumed on the premises. It is reasonable to define what is meant by consumptive use for heating oil because UST systems installed for this purpose are currently exempt from federal UST requirements. They are included within this proposed rule if they are greater than 1,100 gallons in size for notification, interim standards and corrective action requirements, as required by Minn. Stat. §§ 116.46-116.50 (1990). See proposed Minn. Rule pt. 7150.0010 subp. 2(H).

Subpart 15. Corrosion expert. The MPCA adopts the definition of the federal rule at 40 CFR Part 280.12. A "corrosion expert" is a person who, by

reason of knowledge of the physical sciences and principles of engineering and mathematics acquired by a professional education and related practical experience, is qualified to design corrosion control systems on buried or submerged metal piping systems and metal tanks. The person must be accredited or certified as being qualified by the National Association of Corrosion Engineers (NACE) or be a registered professional engineer who has certification or licensing that includes education and experience in corrosion control of buried or submerged metal piping systems and metal tanks. It is reasonable to define "corrosion expert" because such a person is required by the proposed rule to design field-installed and retrofit cathodic protection systems to ensure that operation of the UST system will protect the environment. Refer also to proposed Minn. Rules pts. 7150.0100 and 7150.0110.

Subpart 16. Dielectric material. "Dielectric material" means a material that does not conduct direct electrical current. Dielectric coatings are used to electrically isolate UST systems from the surrounding soil. Dielectric bushings are used to electrically isolate parts of the UST system from one another, for example, tank from piping. Electrical isolation of system components is an important part of designing an UST system which will protect the environment. If dielectric materials are not used or if they are improperly used, components may fail causing releases to the environment. The MPCA adopts the definition of the federal rule at 40 CFR Part 280.12.

Subpart 17. Electrical equipment. "Electrical equipment" is underground equipment that contains dielectric fluid necessary for the operation of transformers and buried electrical cable. It is reasonable to define this term because electrical equipment tanks are excluded from the requirements of the proposed rule. See proposed Minn. Rule pt. 7150.0010, subp. 2(C). The MPCA adopts the definition of the federal rule at 40 CFR 280.12.

Subpart 18. Excavation zone. The MPCA adopts the definition of the federal rule at 40 CFR Part 280.12. "Excavation zone" means the volume containing the tank system and backfill material bounded by the ground surface, walls, and floor of the pit and trenches into which the UST system is placed at the time of installation. It is reasonable to define this term in order that tank installers and removers and the regulated community will understand the boundaries for UST system design and compliance.

Subpart 19. Existing tank system. The MPCA adopts the definition of the federal rule at 40 CFR Part 280.12. An "existing tank system" is defined as one used to contain an accumulation of regulated substances for which installation began on or before December 22, 1988 (the effective date of 40 CFR Part 280). UST systems containing hazardous materials not regulated under 40 CFR Part 280 (see subpart 24) are considered "existing tank systems" if installation began on or before 90 days after the date this rule is adopted. Refer also to subpart 30, "new tank system" in this proposed rule. Installation is considered to have begun if either the owner or operator has obtained all approvals necessary to begin UST system installation or on-site physical construction or installation has begun, or the owner or operator has entered into contractual obligations that cannot be canceled or modified without substantial loss. It is reasonable that the regulated community knows what is meant by an existing tank in order that there is no misunderstanding concerning whether an UST system was regulated at the time 40 CFR Part 280 became effective.

Subpart 20. Farm tank. "Farm tank" means a tank located on a tract of land devoted to the production of crops, raising animals, (including fish), range land, nurseries with growing operations, and associated residences and improvements. A farm tank must be located on farm property. It is reasonable

to define this term because certain farm tanks are exempt from the requirements of the federal rule and this proposed rule. Refer also to proposed Minn. Rule pt. 7150.0010, subp. 2(G). The MPCA adopts the definition of the federal rule at 40 CFR Part 280.

Subpart 21. Flow-through process tank. A "flow-through process tank" forms an integral part of a production process through which there is a steady, variable, recurring, or intermittent flow of materials during the operation of the process. Not included are tanks used for the storage of materials prior to their introduction into the production process or for the storage of finished products or by-products from the production process. It is reasonable to define this term because flow-through process tanks are exempt from the proposed rule and the regulated community needs to know how such tanks are defined. Refer also to proposed Minn. Rule pt. 7150.0010, subp. 2(M). The MPCA adopts the definition of the federal rule at 40 CFR Part 280.

Subpart 22. Free product. "Free product" means a regulated substance that is present as a nonaqueous phase liquid, for example, liquid not dissolved in water. It is reasonable to define this term because technical and safety requirements for release detection and response may differ at a site where free product is present as opposed to one where only dissolved product is present. The MPCA adopts the definition of the federal rule at 40 CFR Parts 280.12 and 280.64 (1988).

Subpart 23. Gathering lines. "Gathering lines" is defined as any pipeline, equipment, facility or building used in the transportation of oil or gas during oil or gas production or gathering operations. It is reasonable to define this term because certain pipeline facilities, including gathering lines, are exempt from the proposed rule and the regulated community needs to know how such lines

are defined. The MPCA adopts the definition of the federal rule at 40 CFR Part 280.12.

Subpart 24. Hazardous material. "Hazardous material" is defined in the proposed rule to be consistent with the existing definition of a "regulated substance" in Minn. Stat. § 116.46, subd. 6 (1990). The definition is broader than the federal definition for "hazardous substance" as defined in CERCLA. "Hazardous material" includes substances listed in 49 CFR Section 172.101 (1988) including constituents of petroleum under subpart 38, item C of this proposed rule, but it does not include hazardous wastes listed under Minn. Rules ch. 7045 (1990) or 40 CFR Part 261 (1989), it does not include petroleum as defined under subparts 38A, B and D of this proposed rule, nor does it include a substance that is not liquid at a temperature of 60 degrees Fahrenheit and pressure of 14.7 pounds per square inch absolute. It is reasonable to exclude hazardous wastes from the definition because Minn. Rules ch. 7045 (1990) already contains performance standards for USTs containing these substances to protect public health and safety and the environment. It is reasonable to exclude petroleum products from this definition except for constituents of petroleum (such as benzene, toluene or xylene) which, when stored alone, are considered "hazardous materials" and are listed in 49 CFR § 172.101 (1988). It is also reasonable to exclude gaseous materials listed in 49 CFR § 172.101 (1988). Release of gases (such as propane) from a tank is addressed under Minn. Rules ch. 7510, the Minnesota Uniform Fire Code.

In addition to substances cited in 49 CFR § 172.101 (1988) (see Minn. Stat. § 116.46, subd. 6 (1990)), hazardous materials also include any mixture of these substances and petroleum, unless the amount of the hazardous material is de minimus. UST systems containing de minimus concentrations of regulated substances are excluded from the federal rule at 40 CFR Part 280.10(b)(5) and

proposed Minn. Rule pt. 7150.0010, subp. 2(E). It is reasonable that UST systems containing mixtures of petroleum and hazardous materials be required to meet operating requirements for USTs containing hazardous materials because such mixtures will generally cause greater environmental harm should they leak from a tank than if the tank contained only petroleum. By similar reasoning, substances meeting the definitions of both hazardous materials and petroleum are considered hazardous materials.

Subpart 25. Hazardous material UST system. The term "hazardous substance UST system" cited in 40 CFR Part 280.12 has been replaced by "hazardous material UST system" in the proposed rule to be consistent with Minn. Stat. § 116.46, subd. 6 (1990). See also discussion under "hazardous material," above.

Subpart 26. Heating oil. The definition for "heating oil" is the same in the proposed rule as in the federal rule at 40 CFR Part 280.12. UST systems larger than 1,100 gallons in volume storing heating oil for consumptive use on the premises where stored are regulated under Minn. Stat. §§ 116.46- 116.50 (1990), whereas these systems are excluded from federal law under the definition of "underground storage tank" (see 40 CFR Part 280.12). The MPCA has decided to defer UST systems storing heating oil for consumptive use from certain operation and release detection requirements of the federal law. However, notification requirements consistent with Minn. Stat. § 116.48 (1990) and proposed Minn. Rules pt. 7150.0120, interim standards consistent with Minn. Stat. § 116.49 (1990) and proposed Minn. Rules pt. 7150.0020, and release reporting and cleanup requirements consistent with Minn. Stat. § 115.061 (1990) and Minn. Stat. ch. 115C (1990) do apply to these tanks. It is reasonable that these requirements be applied to heating oil tanks both because their regulation is mandated by statute and because data gathered by the MPCA over the past several years has

shown that unprotected heating oil tanks have a failure rate similar to other unprotected tanks.

Subpart 27. Hydraulic lift tank. The MPCA adopts the definition of the federal rule at 40 CFR Part 280.12. "Hydraulic lift tank" means a tank holding hydraulic fluid for a closed-loop mechanical system that uses compressed air or hydraulic fluid to operate lifts, elevators, and other similar devices. It is reasonable to define this term because these tanks are exempt from federal regulation at 40 CFR Part 280.10(b)(3). This exemption is reasonable because hydraulic lift tanks tend to be small (i.e., less than 100 gallons capacity) and have "built-in" leak detection capability to the extent that the lift supplied by the tank will not operate properly if the tank or supply lines have leaks. Moreover, the environmental impacts from a leaking hydraulic lift tank will generally be minimal.

(Note: The definition of "implementing agency" in the federal rule has been omitted from this proposed rule. The MPCA is the implementing agency for the UST rule; see proposed Minn. Rules pt. 7150.0030, subp. 3.)

(Note: The definition of "liquid trap" in the federal rule has also been omitted since there are no oil and gas production facilities in Minnesota which would use liquid traps as defined by 40 CFR Part 280.12.

Subpart 28. Maintenance. The MPCA adopts the definition of the federal rule at 40 CFR Part 280.12, except that "regulated substance" replaces "product." "Maintenance" means the normal operational upkeep to prevent an UST system from releasing a regulated substance. "Regulated substance" is a more generic term than "product" and applies to all substances regulated under this rule. It is reasonable to define this term because maintenance of an UST system is an important part of assuring that the system does not leak and harm the environment.

Subpart 29. Motor fuel. "Motor fuel" means petroleum or a petroleum-based substance that is motor gasoline, aviation gasoline, No. 1 or 2 diesel fuel, or any grade of gasohol, and is typically used in the operation of a motor engine. It is reasonable to define this term because UST systems of 1,100 gallons or less capacity storing motor fuel at farms or residences are excluded from the requirements of the proposed rule at Minn. Rules pt. 7150.0010, subp. 2(G). The MPCA adopts the definition of the federal rule at 40 CFR Part 280.12.

Subpart 30. New tank system. "New tank system" means a tank system that is or will be used to contain regulated substances, and which is not defined as an existing tank system under proposed Minn. Rules pt. 7150.0030, subp. 19. New UST systems are those for which installation began after December 22, 1988 (the effective date of 40 CFR Part 280). For tanks not regulated under 40 CFR Part 280, but regulated under the authority of Minn. Stat. §§ 116.46- 116.50 (1990), the effective date to be considered a "new tank system" is 90 days after the effective date of this proposed rule. An example of a new tank system which falls into this category would be an UST storing a hazardous material which is listed in 49 CFR § 172.101 (1988) but not in CERCLA. See also the definition of "existing tank system" proposed in subpart 19, above. It is reasonable that this term be defined so that the regulated community understands which requirements apply to their UST system.

Subpart 31. Noncommercial purposes. The MPCA adopts the definition of the federal rule at 40 CFR Part 280.12. "Noncommercial purposes" with respect to motor fuel, means not for resale. It is reasonable to define this term because UST systems of 1,100 gallons or less capacity at farms or residences storing motor fuel for noncommercial purposes are exempt from the requirements of the proposed rule. Refer also to Minn. Stat. § 116.47(1) (1990).

Subpart 32. On the premises where stored. The MPCA adopts the definition of the federal rule at 40 CFR Part 280.12. "On the premises where stored" with respect to heating oil, means UST systems located on the same property where the stored heating oil is used. It is reasonable to define this term because UST systems of 1,100 gallons or less capacity storing heating oil for consumptive use on the premises where stored are exempt from the requirements of the proposed rule. Refer also to Minn. Stat. § 116.47 (1) (1990).

Subpart 33. Operational life. "Operational life" means the period starting when installation of the tank system has begun until the time the system is properly closed under the provisions of the proposed rule. It is reasonable to define this term in order that the regulated community understands what is meant by the operating life of an UST system. Once the operational life of an UST system has begun, the system is considered to be in operation until the requirements of proposed Minn. Rules pts. 7150.0400 to 7150.0440 are met. Refer also to 40 CFR Part 280.12 and Parts 280.70 to 280.74. The MPCA adopts the definition of the federal rule at 40 CFR Part 280.

Subpart 34. Operator. "Operator" is defined as a person in control of, or having responsibility for, the daily operation of a tank, and a person who is in control of, or had responsibility for, the daily operation of the tank immediately before the discontinuation of its use. This term is used throughout the Minnesota storage tank program. It also has a basis in Minn. Stat. § 116.46 (1990) and Minn. Stat. ch. 115C (1990). It is reasonable to define this term to clarify who is considered an operator of a tank and to provide consistency within the program. The definition of "operator" has been expanded over that in 40 CFR Part 280.12 to clarify that the term also applies to a person having responsibility for the operation of a tank immediately before its use was discontinued, as in the case of an UST system being taken out of service.

Clarification is also provided to show that the term "operator" also applies to persons responsible for releases of petroleum from an UST system under Minn. Stat. ch. 115C (1990) and releases of a hazardous material from an UST system under Minn. Stat. § 115B.03 (1990).

Subpart 35. Overfill release. An "overfill release" is a release occurring when a tank is filled beyond its capacity, resulting in a discharge of the regulated substance to the environment. It is reasonable to define this term because the proposed rule addresses protective measures necessary to prevent environmental damage which may result from UST system overfilling. The MPCA adopts the definition of the federal rule at 40 CFR Part 280.12.

Subpart 36. Owner. The term "owner" is used throughout the UST regulatory and cleanup programs. An "owner" is a person who holds title to, controls, or possesses an interest in a tank and a person who held title to, controlled or possessed an interest in a tank immediately before discontinuation of its use. This does not include a person who holds an interest in a tank solely for financial security, unless through foreclosure or other related actions, the holder of a security interest has taken possession of the tank. This definition includes similar clarifications as under the definition of "operator" in subpart 34 and is compatible with 40 CFR Part 280.12. It is reasonable to define this term to clarify the difference between an owner and an operator and to provide for program consistency.

Subpart 37. Person. "Person" is defined as an individual, partnership, association, public or private corporation, or legal entity, including the United States government, an interstate commission or other body, the state, or any agency, board, bureau, office, department, or political subdivision of the state, but does not include the MPCA. This definition encompasses the

definitions in Minn. Stat. chs. 115C and 116 (1990). It is reasonable to define this term to clarify its meaning and provide for program consistency.

Subpart 38. Petroleum. "Petroleum" means one of the following substances a) gasoline and fuel oil as defined in Minn. Stat. § 296.01, subds. 3 and 4 (1990); b) crude oil or a fraction of crude oil that is liquid at a temperature of 60 degrees Fahrenheit and pressure of 14.7 pounds per square inch absolute; c) constituents of gasoline and fuel oil under item a; and constituents of crude oil under item b; or d) petroleum-based substances which are comprised of a complex blend of hydrocarbons derived from crude oil through processes of separation, conversion, upgrading, and finishing, such as motor fuels, jet fuels, distillate fuel oils, residual fuel oils, lubricants, and used oils. The definition is consistent with Minn. Stat. §§ 116.46-116.50 (1990) and the federal rule at 40 CFR Part 280.12. It is reasonable to define this term to provide consistency with existing law and to clarify for the regulated community the difference between petroleum and other regulated substances.

Subpart 39. Petroleum underground storage tank system. "Petroleum UST system" includes UST systems containing petroleum as well as mixtures of petroleum with de minimus quantities of hazardous materials. See also discussion under subpart 24. It is reasonable to define this term to provide consistency with 40 CFR Part 280.12 and to clarify for the regulated community when a system must meet petroleum UST standards as opposed to hazardous material UST requirements.

Subpart 40. Pipe or piping. "Pipe" or "piping" means a hollow cylinder or tubular conduit for conveying a regulated substance from one point to another within an UST system. It is reasonable to define "pipe" or "piping" to distinguish this part of the UST system from the tank vessel itself, since design and monitoring requirements differ for each part of the system in the

proposed rule. The MPCA adopts a different definition than the federal rule at 40 CFR Part 280.12 to emphasize the more general concept of piping as a method of conveyance rather than a narrower definition based on material of construction.

Subpart 41. Pipeline facilities. "Pipeline facilities" including gathering lines, means new and existing pipe rights-of-way and any associated equipment, facilities, or buildings. It is reasonable to define this term because pipeline facilities, although regulated by other state and federal law, are exempt from 40 CFR Part 280 and this proposed rule. The MPCA adopts the definition of the federal rule at 40 CFR Part 280.12.

Subpart 42. Regulated substance. "Regulated substance" means a hazardous material or petroleum. See also subparts 24 and 38. The definition of "regulated substance" has been simplified over the same definition in 40 CFR Part 280 by referencing to the previously defined terms "hazardous material" and "petroleum." It is reasonable to define "regulated substance" in this way because it simplifies the federal definition and makes the rule less repetitive.

Subpart 43. Release. "Release" means a spilling, leaking, emitting, discharging, escaping, leaching or disposing from an UST system into the environment. This is consistent with definitions of "release" in 40 CFR Part 280.12, and Minn. Stat. § 116.46 (1990) and ch. 115C (1990). The definition also clarifies that "releases" include spills associated with overfills and transfer operations as a regulated substance is put into or discharged from an UST system. Further, "release" does not include discharges or designed venting allowed under MPCA rules.

Subpart 44. Release detection. The MPCA adopts the definition of the federal rule at 40 CFR Part 280.12. "Release detection" is the process of determining whether a release of a regulated substance has occurred from an UST

system into the environment or into the interstitial space between the UST system and its secondary barrier or secondary containment around it. It is reasonable to define this term because release detection requirements are an important part of determining whether an UST system will protect the environment as it is being operated.

Subpart 45. Repair. "Repair" means the correction, restoration, modification or upgrading of a tank system, including but not limited to, the addition of cathodic protection systems, the replacement of piping, valves, fill pipes or vents, the lining of a tank through the application of such materials as epoxy resins, and any other similar activities that may affect the integrity of the tank system. This is a more comprehensive definition of "repair" than appears in 40 CFR Part 280.12, and is consistent with the definition used in Minn. Rules Ch. 7105 (State Register, January 8, 1990) governing the certification of UST system installers, repairers and removers.

Subpart 46. Residential tank. The MPCA adopts the definition of the federal rule at 40 CFR Part 280.12. A "residential tank" is a tank located on property used primarily for dwelling purposes. It is reasonable to define this term because smaller residential tanks are exempt from requirements of the proposed rule.

(Note: The definition for "SARA" (Superfund Amendments and Reauthorization Act) in the federal rule has been omitted because it is not cited in the proposed state rule.)

Subpart 47. Septic tank. The MPCA adopts the definition of the federal rule at 40 CFR Part 280.12. "Septic tank" means a watertight, covered receptacle designed to receive or process through liquid separation or biological digestion, the sewage discharged from a building sewer. The effluent from the receptacle is distributed for disposal through the soil and settled

solids and scum from the tank are pumped out periodically and hauled to a treatment facility. It is reasonable to define this term because septic tanks are exempt from both the federal and proposed state UST rule.

Subpart 48. Storm water or wastewater collection system. The MPCA adopts the definition of the federal rule at 40 CFR Part 280.12. "Storm water or wastewater collection system" means piping, pumps, conduits, and any other equipment necessary to collect and transport the flow of surface water runoff resulting from precipitation, or domestic, commercial, or industrial wastewater to and from retention areas or areas where treatment is designated to occur. The collection of storm water and wastewater does not include treatment, except where incidental to conveyance. It is reasonable to define this term because storm water or wastewater collection systems are not considered UST systems for purposes of both the federal and proposed state UST rule.

Subpart 49. Surface impoundment. The MPCA adopts the definition of the federal rule at 40 CFR Part 280.12. "Surface impoundment" means a natural topographic depression, man-made excavation, or diked area formed primarily of earthen materials, although it may be lined with man-made materials, that is not an injection well. It is reasonable to define this term because surface impoundments are exempt from both the federal and proposed state UST rule.

Subpart 50. Tank. The MPCA adopts the definition of the federal rule at 40 CFR Part 280.12. "Tank" is a stationary device designed to contain an accumulation of regulated substances and constructed of non-earthen materials, such as concrete, steel, and plastic, that provide structural support. It is reasonable to have a generic definition of the term "tank" which is consistent with the federal definition. It aids in discussion of regulation of tank

systems in general, as opposed to specific reference to "underground storage tank systems" which are regulated under the proposed rule and "aboveground storage tank systems" regulated by Minn. Rules ch. 7100 (1990).

Subpart 51. Tank system. "Tank system" as used in this proposed rule has the same meaning as underground storage tank and underground storage tank system. It is reasonable to define this term in order that there is no misunderstanding when these terms are used interchangeably, as they are in the federal and proposed state UST rule.

Subpart 52. Underground area. "Underground area" means an underground room such as a basement, cellar, shaft, or vault providing enough space for physical inspection of the exterior of the tank situated on or above the surface of the floor. It is reasonable to define this term because tanks located in underground areas such that the tank is physically inspectable are exempt from requirements of the federal and proposed state UST rule. The MPCA adopts the definition of the federal rule at 40 CFR Part 280.12.

Subpart 53. Underground release. "Underground release" means a belowground release. Refer to 40 CFR Part 280.12 and subpart 2, above. It is reasonable to define this term since the rule requires detection of underground releases and reporting under Minn. Stat. § 115.061. See also definition of "release," subpart 43. The MPCA adopts the definition of the federal rule at 40 CFR Part 280.12.

Subpart 54. Underground storage tank; underground storage tank system. "Underground storage tank (UST)" or "UST system" means any one or a combination of containers including tanks, vessels, enclosures, or structures and underground appurtenances connected to them that is used to contain or dispense an accumulation of regulated substances, and the volume of which, including the volume of underground pipes connected to them, is ten percent or more beneath

the surface of the ground. The term does not include any tanks or piping described in proposed Minn. Rules pt. 7150.0010, subp. 2. The definition of UST system in 40 CFR Part 280.12 has been simplified in the proposed state rule so that exempted UST systems have been clearly defined in subpart 2 near the beginning of the rule, rather than listed in the definition, as with the federal rule. This approach is reasonable and is consistent with Minn. Stat. § 116.46, subd. 8 (1990).

Subpart 55. Upgrade. "Upgrade" means the addition or retrofit of systems such as cathodic protection, lining, spill and overfill controls, or piping to improve the ability of an UST system to prevent the release of product. It is reasonable to define this term because upgrading of UST systems is a primary way UST owners may bring their systems into compliance with the rule and, in so doing, help protect the environment. The MPCA adopts the federal rule at 40 CFR Part 280.12 with the addition of piping to clarify that additions or retrofits to both the tank and piping are included as part of upgrading an UST system.

Subpart 56. Wastewater treatment tank. The MPCA adopts the definition of the federal rule at 40 CFR Part 280.12. "Wastewater treatment tank" means a tank that is designed to receive and treat an influent wastewater through physical, chemical, or biological methods. It is reasonable to define this term because such tanks are exempt from the requirements of both the federal and proposed state rule.

Underground Storage Tank Systems:

Design, Construction, Installation and Notification

Part 7150.0100 Performance Standards for New Underground Storage Tank Systems

This part establishes performance standards for new UST systems. The nation's aging tank population and the resulting rapid increase in the number of reported UST system failures in recent years convinced the EPA that national design and construction requirements were needed for new UST systems. The EPA has concluded that citing industry codes of practice rather than prescribing detailed design standards would provide needed flexibility to the regulated community in planning and installing UST systems, while still providing for sufficient environmental protection. The MPCA has elected to follow this approach also.

Subpart 1. Purpose. This subpart makes clear that the performance standard section of the proposed rule is intended to prevent releases from UST systems due to structural failure, corrosion, or spills and overfills. It is reasonable that owners and operators of UST systems know what performance standards they will be required to meet in order to protect public health, safety, and the environment.

Subpart 2. Tanks. This subpart lists the standards for corrosion protection which apply to the design, construction and installation of tanks. All methods used must be in accordance with a code of practice listed in subpart 3. This is consistent with the approach taken by the EPA in 40 CFR Part 280.20(a). There are five choices for corrosion protection which are acceptable: 1) the tank may be constructed of fiberglass-reinforced plastic; 2) the tank may be constructed of dielectrically-coated, cathodically-protected steel; 3) the tank may be a composite of steel and fiberglass-reinforced plastic; 4) the tank may be constructed of metal without corrosion protection

measures if the tank site is determined by a corrosion expert not to be corrosive enough to cause the tank to have a release due to corrosion for the operating life of the tank and that records verifying this fact are kept by the owner/operator; 5) the MPCA commissioner approves a tank design in writing which will prevent a release or threatened release in a manner that is no less protective of the environment than the first four listed options. It is reasonable that the regulated community be given as wide a choice as possible of options to meet the corrosion protection requirements of the proposed rule. The performance of corrosion-protected steel, fiberglass and composite tanks was closely examined by the EPA. In general, it was found that very few failures of these "new generation" tanks have occurred. Failures which have occurred have generally been due to improper installation, which is addressed by Minn. Rules ch. 7105 (State Register, January 8, 1990). In addition to corrosion-protected tanks, it is reasonable to give tank owner/operators the option of installing nonprotected tanks if they receive a determination by a corrosion expert (see proposed Minn. Rules pt. 7150.0030, subp. 15) that the tank will not leak due to corrosion for its operating life. Because of Minnesota's relatively corrosive soils and high water table conditions, it is not expected that this option would be chosen often by UST owner/operators. Finally, alternate options for tank corrosion protection may be approved in writing by the commissioner if they are at least as protective of the environment as the other listed options. This is reasonable because it recognizes that advances in technology may develop new types of UST systems which protect the environment as well or better than the stated alternatives. UST system owner/operators must keep results of the commissioner's determination for the life of the tank.

Subpart 3. Subpart 3 cites the codes of practice which incorporate performance criteria for the tank portion of the UST system. It is reasonable

to do this in the body of the rule so the regulated community will know which codes apply to this part of the proposed rule.

Subpart 4. Piping. This subpart lists the standards for corrosion protection which apply to the design, construction and installation of piping. All methods must be in accordance with a code of practice listed in subpart 5. This is consistent with the approach taken by the EPA in 40 CFR Part 280.20 (b). Piping that routinely contains product and is in contact with the ground must be designed, constructed and protected from corrosion according to one of the following: 1) the piping may be constructed of fiberglass-reinforced plastic; 2) the piping may be constructed of dielectrically-coated, cathodically-protected steel; 3) the piping may be constructed of metal without additional corrosion protection provided it is installed at a site that is determined by a corrosion expert to not be corrosive enough to cause it to have a release due to corrosion during its operating life and that owner/operators maintain records verifying this; or 4) piping construction and corrosion protection are determined by the MPCA commissioner to be designed to prevent the release or threatened release of stored product in a manner that is no less protective of human health and the environment than the other choices given. The reasoning for offering these choices is similar to that given for tank options 1, 2, 4, and 5 in subpart 2, above. The EPA studies of release causes have shown that the piping portion of UST systems is up to twice as likely as the tank portion to be the release source. It is therefore reasonable that corrosion protection requirements for piping be at least as restrictive as those for tanks.

Subpart 5. Subpart 5 cites the codes of practice which incorporate performance criteria for the piping part of the UST system. It is reasonable to do this in the body of the rule so the regulated community will know which codes apply to this part of the proposed rule.

Subpart 6. Spill and overfill prevention equipment. The EPA has found that the surface spills and overfills that occur at UST systems are usually the result of human error, not equipment failure. There are two major types of surface releases: 1) spilling, which results from improper dispensing practices, such as disconnecting the delivery hose from a tank's fill pipe before the hose has drained completely, and 2) overfilling, which occurs when the tank liquid level exceeds tank capacity and product escapes through tank bung holes, vent lines, or fill ports. Spills and overfills occur relatively frequently, however they may not be reported because they are typically small and can be easily contained and cleaned up. However, a history of repeated spills and overfills at a tank site can accumulate in volume and cause significant soil and ground water contamination. The EPA has concluded that safeguards to protect the environment and public health and safety from the effects of spills and overfills are necessary and reasonable to require UST owners to install and the MPCA agrees.

The proposed rule requires UST owner/operators to provide spill prevention equipment such as a spill catchment basin to prevent release of product to the environment when the transfer hose is detached from the fill pipe. Overfill prevention equipment that will either automatically shut off flow into the tank when the tank is no more than 95 percent full or alert the transfer operator when the tank is no more than 90 percent full by restricting flow into the tank or triggering a high-level alarm is required. Spill and overfill prevention equipment is not required if alternative equipment that the MPCA commissioner determines is no less protective of the environment than that specified above is used. UST systems filled by transfers of no more than 25 gallons at a time

(such as most used oil tanks) do not require spill and overfill prevention equipment. The EPA selected the 25 gallon limit because it is common industry practice at automative service centers to use containers holding up to 25 gallons for storing used oil prior to putting it into an UST. The EPA has concluded, that the likelihood of overfilling the tank is lessened because the volume being transferred is much smaller than the tank volume. In addition, the maximum size of a spill that could occur is 25 gallons. A spill of that size would be much easier to contain and clean up than a spill or overfill of several thousand gallons that can occur during product transfer from a tanker truck to an UST. The EPA has concluded, and the MPCA agrees, that proper operating practices and procedures will adequately protect the human health and the environment.

Subpart 7. Installation. UST systems, including all tanks and piping must be installed according to one or more of the codes of practice listed in this subpart and according to all manufacturer's instructions. This is consistent with 40 CFR Part 280.20(d) and Minn. Stat. § 116.49, subd. 2(1) (1990).

Subpart 8. Certification of installation. UST system owner/operators must ensure that their systems comply with subpart 7 by certifying on the Minnesota UST notification form that the installer is in compliance with Minn. Stat. § 116.491 (1990) and Minn. Rules ch. 7105 (State Register January 8, 1990) and that all work listed in the manufacturer's installation checklists has been completed. This subpart has been simplified from 40 CFR Part 280.20(e), because Minnesota has already implemented an UST installer certification program and this will be the primary assurance to UST owner/operators that UST systems are being properly installed. The Minnesota UST notification form (see proposed Minn. Rules pt. 7150.0120) has been modified to serve as the certification of compliance required by the EPA at 40 CFR Part 280.20(e). This is reasonable

because it will limit the paperwork required by UST owners by reducing the UST notification and certification of compliance for new UST systems to one form. It is also reasonable to require manufacturer's installation checklists to be completed because this will help UST installers insure that their systems will protect the environment. Completion of installation checklists is also one basis for manufacturers to enforce warranty conditions on their systems.

Part 7150.0110 Upgrading of Existing UST Systems

Subpart 1. Alternatives allowed. This subpart establishes the alternatives UST owners have before December 22, 1998, the ten-year phase-in period established by the EPA at 40 CFR Part 280. Basically, the owners have three options: 1) install new tanks which meet the performance standards in proposed part 7150.0100, above; 2) upgrade their UST system to meet requirements of proposed subparts 2 through 4 below; or 3) close the system in accordance with the proposed closure requirements. The EPA carefully considered what would be a reasonable approach to upgrading the nation's aging UST population, including: rapid upgrade and replacement (within 3 to 5 years), gradual upgrade and replacement (within 6 to 12 years), and no required upgrade and replacement of existing UST systems. The EPA selected the gradual approach, proposing that all existing UST systems storing regulated substances be required to either upgrade to new tank standards within 10 years (through retrofitting or replacement) or be permanently closed. The MPCA agrees with this approach because it appears to complement current industry trends toward upgrading or replacing voluntarily, while setting a clear target date by which all upgrades and replacements must be completed.

Subpart 2. Tank upgrading requirements. This subpart establishes allowable options for upgrading existing tanks by providing corrosion protection.

Upgrading options include internal lining, cathodic protection, or both internal lining and cathodic protection. To use internal lining of a tank by itself as an upgrading option, the tank must be internally inspected after 10 years and every 5 years thereafter. Interior lining used as the sole method of protecting a tank from corrosion is not regarded by the EPA as a permanent upgrade, and the MPCA concurs with this position. It is adequate only if it continues to meet original lining design specifications as determined by periodic internal inspection of the tank. If a lined tank does not meet original design specifications, it no longer meets the upgrading requirements and, if it cannot be repaired in accordance with industry codes, it is subject to the unprotected tank requirements and must be replaced after 1998. Lining of tanks must be done in accordance with proposed Minn. Rules pt. 7150.0230 (Repairs Allowed).

A tank may be upgraded by cathodic protection alone if the cathodic protection system meets the requirements for new tanks (proposed Minn. Rules pt. 7150.0100, subp. 2(B), above) and the integrity of the tank is ensured using one of four methods: 1) internal inspection to ensure the tank is structurally sound and free of corrosion holes, 2) reviewing results of release detection monitoring installed according to proposed Minn. Rules pt. 7150.0330, E to I (the tank must be less than ten years old to apply this option), 3) tightness testing the tank twice, once before installing the cathodic protection system and again between three and six months following first operation of the system (the tank must be less than ten years old to apply this option), and 4) assessing the tank for corrosion by a method that is determined by the MPCA commissioner to prevent releases in a manner that is no less protective than 1) through 3). This approach is reasonable in that it allows upgrading of younger tanks through cathodic protection alone while helping ensure that older tanks (over ten years) will not be upgraded unless they pass an internal inspection.

By offering the fourth option of method-specific commissioner approval, the EPA recognizes that there may be other methods of establishing a tank's integrity whose effectiveness has not been fully demonstrated but which may be appropriate under certain circumstances.

Finally, UST owners are given the option of using both cathodic protection and internal lining to comply with upgrading requirements. The lining is intended to provide protection from internal corrosion, while the cathodic protection prevents exterior corrosion. Although obviously a more costly option than using cathodic protection or lining alone, this option is certainly reasonable in that it allows for an added measure of environmental protection. In addition, if either option should fail for some reason, the UST would not necessarily need to be treated as a non-upgraded tank, provided the required monitoring of the viable option is maintained.

Subpart 3. Piping upgrading requirements. Metal piping that routinely contains product and is in contact with the ground must be cathodically protected and meet the performance standards for new underground piping systems. Upgraded metal piping does not have to be dielectrically coated. Pipe lining is a developing technology that may eventually become a viable option for upgrading some types of metal piping. The technology requires more development and testing, however, to prove its effectiveness for use on small-diameter pipes and thus was not chosen as an option for upgrading by the EPA in the final rule. It is reasonable that, as with the tank part of the UST system, cathodic protection be allowed as a method for upgrading existing unprotected metal piping and that performance standards for new piping be met. A properly designed cathodic protection system on bare metal piping will effectively stop further corrosion from occurring and thus protect the environment from impacts of leaks which may develop. However, some UST owners may find that although it may be cost

effective to retrofit a tank with cathodic protection, it may be easier and less expensive to replace old metal piping with protected piping, especially if the piping run is short.

Subpart 4. Spill and overfill prevention equipment. To prevent spilling and overfilling associated with product transfer, existing UST systems must be upgraded to meet new system standards as discussed under proposed Minn. Rules pt. 7150.0100, subp. 6, above, by December 22, 1998. Such equipment must generally include devices such as a spill catchment basin that will prevent release of product to the environment and overfill prevention equipment that will either automatically shut off flow into the tank when it is no more than 95 percent full or alert the transfer operator when the tank is no more than 90 percent full by restricting flow into the tank or triggering a high-level alarm. As mentioned above, spills and overfills occur relatively frequently during UST system operation, however they may not be reported because they tend to be small and can be easily contained and cleaned up. A history of repeated spills and overfills at a tank site can accumulate in the soil and eventually cause significant contamination. Therefore, prevention is the key to managing the spill and overfill problem and it is reasonable to require the relatively inexpensive retrofitting of existing systems with this preventive equipment.

Part 7150.0120 Notification Requirements

Subpart 1. Notice of underground storage tank system installation. At least 30 days before beginning installation of an UST system under proposed part 7150.0100, owners and operators must notify the commissioner of their intent to install the UST system. This subpart is similar to the advance notice for removal of an UST system required by part 7150.0410, subpart 2. This is a reasonable requirement to enable the MPCA to schedule inspections of UST

installations and coordinate technical assistance efforts with owner/operators, local authorities and others.

Subpart 2. Notification of new tanks and changes in service. The Hazardous and Solid Waste Amendments of 1984 (Public Law No. 98-616) amended the federal Resource Conservation and Recovery Act to include a national program for the notification of UST systems by their owners. Under this program, tank owners must provide information to the EPA such as tank type, size and contents. Considerable flexibility was provided to states to establish their own notification programs. States could develop their own reporting formats requiring the submission of more UST system information than the EPA, provided minimum information requirements were met. In Minnesota, the UST notification requirements were passed by the legislature in 1985 as Minn. Stat. § 116.48 (1990). UST system owners were given until June 1, 1986, to report the existence of their systems to the MPCA. After June 1, any owner bringing a new UST system into use was given 30 days to report. The MPCA chose to develop its own notification form incorporating the EPA minimum requirements and certain additional information. In November 1985, the MPCA began a program to distribute, receive and organize data collected from the notification forms. This subpart solidifies the notification requirements for UST systems in federal law (40 CFR Part 280.22) and state rulemaking. The language of 40 CFR Part 280.22 has been simplified because the statutory mandate of Minn. Stat. § 116.48 (1990) establishes the minimum requirements which the state's notification program must meet. It is reasonable for the state to operate and maintain a notification program so that the nature of Minnesota's UST population may be determined and tracked. Information on UST sites as provided by their owners through the notification program is used every day by the MPCA in technical assistance, enforcement, and cleanup activities.

Subpart 3. Owner and operator tank system certification. This subpart requires owners and operators of new UST systems to certify on the notification form compliance with installation, cathodic protection, and release detection requirements under 40 CFR Part 280, Subparts B and D (proposed Minn. Rules pts. 7150.0100, 7150.0310, and 7150.0320) and 40 CFR Part 280, Subpart H. The Minnesota UST notification form has been modified to include these requirements. It is reasonable that the MPCA have the authority to request this information to ensure that the program requirements have been met.

Subpart 4. Installer tank system certification. This subpart requires UST system owner/operators to ensure that the person who installed the system certifies that the installation methods comply with proposed Minn. Rules pt. 7150.0100, subp. 7 (Installation). Also, the installer must be in compliance with certification requirements of Minn. Stat. § 116.491 (1990) and Minn. Rules ch. 7105 (State Register, January 8, 1990). It is reasonable to require UST owner/operators to ensure that new installations meet current requirements of the law, especially regarding installation practices, since this has been identified as a major area of concern for premature UST system failures.

Subpart 5. Repairer tank system certification. This subpart requires UST system owner/operators to ensure that the person repairing the system certifies that methods used to repair tanks and piping comply with part 7150.0110 (Upgrading UST Systems) and part 7150.0230 (Repairs Allowed). Also, the repairer must be in compliance with certification requirements of Minn. Stat. § 116.491 (1990) and Minn. Rules ch. 7105 (State Register, January 8, 1990). It is reasonable to require UST owner/operators to ensure that repairs meet current requirements of the law, since proper repairs will extend the life of an UST system and help protect public health, safety and the environment.

Subpart 6. Tank seller notification. This subpart requires a person who sells a tank or property that the person knows contains a tank to notify the purchaser of the notification requirement in writing. This differs in two respects from the requirements of 40 CFR Part 280.22(g) in that the notification extends not only to tanks but also to property the seller knows contains tanks and the notification must be in writing. The MPCA has found that many UST problems have been related to buyers of property who were not aware that the land they were buying contained underground tanks. It is reasonable that sellers be required to disclose this information in writing. It is also consistent with the mandate of Minn. Stat. § 116.48 (1990).

General Operating Requirements

Part 7150.0200 Spill and Overfill Control

Subpart 1. Spill and overfill release prevention. This subpart requires UST owner/operators to ensure that releases due to spilling or overfilling do not occur. The volume available in the tank must be greater than the volume of product to be transferred to the tank before the transfer is made. The transfer operation must be constantly monitored to prevent spilling or overfilling. Although the EPA states that responsible carriers may be primary agents in the field to prevent spills and overfills, the agency has taken the approach of making the UST system owner and operator responsible for preventing them because it has no legal authority to regulate transporters under Subtitle I of RCRA. Since some UST systems are in large tank farms where it is not feasible or economical, especially during multiple filling operations, to have someone present at each tank as it is being filled, the EPA has required only that transfer operations be constantly monitored. This allows for a person at the

UST site, but not necessarily at the transfer point, to monitor a transfer using remote sensing equipment that can prevent a spill or overfill from occurring (40 CFR Part 280.30(a)).

Subpart 2. Reporting and cleanup. As required by Minn. Stat. § 115.061 (1990), owners and operators must report, investigate, and clean up any spills and overfills. This is reasonable to help ensure that releases due to spilling or overfilling will be reported, investigated and cleaned up promptly, minimizing threats to public health and safety or the environment (40 CFR Part 280.30(b)).

Part 7150.0210 Operation and Maintenance of Corrosion Protection

Subpart 1. Owner and operator compliance. Owners and operators of steel UST systems with corrosion protection must ensure that releases due to corrosion are prevented for as long as the system is used to store regulated substances or is temporarily closed in accordance with part 7160.0400. Since historically the most frequent cause of failures in unprotected steel UST systems has been corrosion, it is reasonable that owner/operators of new or upgraded UST systems be required to monitor and maintain corrosion protection systems to ensure that releases to the environment do not occur. Requirements in this regard are given in subparts 2 through 5 (40 CFR Part 280.31).

Subpart 2. Corrosion protection system maintenance. Metal components of the part of the UST system that routinely contain product and are in contact with the ground must have continuous corrosion protection. New requirements for spill and overfill equipment and good operating practices will prevent releases from the top of the tank and vent piping. Corrosion protection is not required for the metal fill pipes of tanks that have a drop tube because the drop tube is the part of the tank that routinely contains product. The drop tube is not in contact with the soil and thus does not require corrosion protection.

Similarly, vent piping is not used for product delivery and presents a minimum risk for release to the environment. It is reasonable to require corrosion protection where metal components contain product and are in contact with soil, as this is where corrosion is most likely to occur resulting in releases with serious environmental impacts. Likewise, it is not necessary to corrosion protect metal components which do not routinely contain product and which are not in contact with the soil (40 CFR Part 280.31(a)).

Subpart 3. Cathodic protection system maintenance. For UST systems using cathodic protection as a means of corrosion protection, owner/operators must ensure that the cathodic protection system is checked for proper operation by a qualified cathodic protection tester (see 40 CFR Part 280.12 and proposed Minn. Rules pt. 7150.0030, subp. 8) within six months of installation and at least every three years thereafter. Criteria used to determine that cathodic protection is adequate must be according to a code of practice listed in this subpart. It is reasonable to require periodic maintenance of cathodic protection systems by qualified individuals to help ensure that they are operating properly and protecting the environment. The MPCA has chosen the inspection time frame published by the EPA as long as a recognized code of practice is used, such as the National Association of Corrosion Engineers' Standard RP-02-85 (40 CFR Part 280.31(b)).

Subpart 4. Impressed current system maintenance. UST systems using impressed current cathodic protection as a means of protecting against corrosion must be inspected every 60 days to ensure proper operation. The EPA has determined that a loss of power to an impressed current system for up to 60 days is unlikely to result in failure of the system due to corrosion. The inspection is straightforward and is conducted simply to ensure that the equipment is running properly. Most of these systems include a light on a control panel that

indicates proper operation. No special training is needed to perform this inspection (40 CFR Part 280.31(c)).

Subpart 5. Recordkeeping. Owner/operators must maintain records of results of testing from the last two service checks required by subpart 3 (which must be performed by a corrosion protection tester) and the last three inspections required by subpart 4 (which can be performed by the owner or operator). It is reasonable to require a short record of recent test results so the owner/operator can demonstrate that the proper operation and maintenance of the cathodic protection system is being carried out (40 CFR Part 280.31(d)).

Part 7150.0220 Compatibility

This part requires owners and operators to use UST systems made of or lined with materials that are compatible with the substance stored. Owners and operators storing alcohol blends are referred to the listed guidance to comply with requirements of this part. During the development of its rule, the EPA sought information on problems reportedly caused by incompatibility of fiberglass tanks and alcohol-blended fuels. The EPA found no demonstrated incompatibility problem with 10 percent alcohol-blended fuels and fiberglass tank systems. Ten percent blends are currently common in the petroleum industry, although there is a possibility that future fuels may be blended with higher percentages of alcohol to address clean air requirements. New fiberglass tanks are being manufactured to be compatible with 100 percent alcohol. In addition, standard fiberglass tanks can be relined with resins that are compatible with new fuels. Because of rapid technological changes in the area of alcohol blending of petroleum products, industry codes are cited in this part as guidance in helping owners and operators with alcohol-blended fuels satisfy the compatibility requirement (40 CFR Part 280.32), and not as mandatory standards.

Part 7150.0230, Repairs Allowed

This part requires owners and operators of UST systems to ensure that any repairs made to the system will prevent releases due to structural failure or corrosion for as long as the system is used to store regulated substances. In Minnesota, owners and operators must also ensure that repairs made are performed by a person certified by the state to do this work under authority provided by Minn. Stat. § 116.491 (1990) and Minn. Rules ch. 7105 (State Register, January 8, 1990). These requirements are reasonable to help ensure that the environment will be protected when repairs to UST systems are made. This part lists six requirements that UST system repairs must meet:

1) Repairs to UST systems must be properly conducted according to a code of practice listed in this item. The proposed rule cites codes developed by a nationally recognized association or an independent testing laboratory so that UST owner/operators have a definite understanding of which codes of practice may be followed by tank repairers to achieve compliance.

2) Repairs to fiberglass-reinforced plastic tanks must be made according to a code of practice developed by a nationally recognized association or an independent testing laboratory similar to item 1), above. It was decided to leave the references to national associations and testing laboratories in place as a means of compliance for fiberglass USTs because repair protocols for these tanks are being developed as composition of fiberglass tanks changes in response to changing composition of fuels. The reference in the EPA rule to repairs being made by the UST manufacturer's authorized representative has been deleted because in Minnesota, any representative making a repair has to meet requirements of Minn. Rules ch. 7105 (State Register, January 8, 1990).

3) Metal pipe sections and fittings that have released product as a result of corrosion or other damage must be replaced. Fiberglass pipes and fittings

may be repaired in accordance with manufacturer's specifications. Repair and maintenance of metal valves is allowed provided that these can be done in a manner that provides sufficient protection against releases. Any releases which occur as a result of corrosion or other damage to piping are subject to reporting and corrective action requirements. Initially, the EPA proposed that all piping be replaced from which a release had occurred. The EPA received comments indicating that fiberglass piping could be satisfactorily repaired and elected to allow that option in the final rule. The MPCA believes that this is a reasonable approach in keeping with industry codes and practices. Item 4 below helps assure that repaired tanks and piping will be tested and monitored to provide for environmental protection.

4) Repaired tanks and piping must be tightness tested according to proposed Minn. Rules pts. 7150.0330(D) (tanks) and 7150.0340(B) (piping) within 30 days after completion of the repair. Exceptions are if the tank is internally inspected, the UST system is monitored monthly in accordance with proposed Minn. Rules pt. 7150.0330 D to I, or another test method is used as approved by the commissioner. It is reasonable to require release detection and quality control inspections for repaired tanks and piping to help ensure that the UST system repair or lining of a tank was performed correctly.

5) Within six months of the repair of a cathodically protected UST system, the cathodic protection system must be checked for proper operation according to proposed Minn. Rules pt. 7150.0210(3) and (4) above. This is reasonable to assure the repaired system is performing correctly and protecting the environment.

6) UST system owner/operators must maintain records of all repairs and any commissioner's determinations referenced above to demonstrate compliance with this part for the remaining operating life of the UST system. This is

reasonable so that a permanent record is available to the owner/operator, the MPCA and other officials should a problem develop with the UST system or a nearby system. Since the MPCA rule adds the option of commissioner's discretion in determining compliance with this part, it is reasonable that the results of this determination also be made part of the permanent records.

Part 7150.0240 Reporting and Recordkeeping

This part brings together in one place in the rule the recordkeeping and reporting requirements which owner/operators of UST systems must meet. Because of the large number of tank sites nationwide, the EPA has chosen to emphasize self-monitoring and reporting in the rule. Owner/operators are required to cooperate fully with inspections, monitoring and testing conducted by the MPCA as well as requests for document submission and results of any testing or monitoring conducted by the owner/operator. Refer also to 40 CFR Part 280.34.

There are two main divisions of requirements for reporting and recordkeeping required of owner/operators of UST systems: 1) information which must be submitted to the MPCA commissioner and 2) information which must be maintained by the owner/operator. Information which must be submitted includes:

1) notification of all UST systems, including the certification of installation (proposed Minn. Rules pts. 7150.0120 and 7150.0100(8));

2) notification of the discovery of an abandoned tank or of any change in uses, contents or ownership of a tank (Minn. Stat. §§ 116.48(2) and (3) (1990));

3) reports of all releases (including suspected releases), spills and overfills, and confirmed releases (Minn. Stat. § 115.061);

4) information gained in the course of taking corrective action (Minn. Stat. § 115C.02(4)); and,

5) notification before permanent closure or change in service (proposed Minn. Rules pt. 7150.0410).

Information which must be maintained includes:

1) an analysis of site corrosion potential if corrosion protection equipment is not used (proposed Minn. Rules pt. 7150.0100(2) and (4));

2) the MPCA commissioner's determination that alternative corrosion protection or spill and overfill prevention equipment may be used (proposed Minn. Rules pt. 7150.0100(2), (4), and (6));

3) documentation of operation of corrosion protection equipment (proposed Minn. Rules pt. 7150.0210(5));

4) documentation of UST system repairs (proposed Minn. Rules pt. 7150.0230(F));

5) documentation of compliance with release detection requirements (proposed Minn. Rules pt. 7150.0350); and,

6) results of the site investigation conducted at closure (proposed Minn. Rules pt. 7150.0440).

Owners and operators must keep required records either at the UST site where they are available for inspection by the MPCA or at a readily available alternative site where they can be provided for inspection to the MPCA upon request. An additional alternative is provided to owner/operators closing sites in that they may mail closure records to the MPCA if the records cannot be kept on the site.

The EPA comments in the preamble to 40 CFR Part 280 that it received widespread support for the general notion that some recordkeeping and reporting is essential to ensure that owners and operators adhere to the technical standards. The EPA's approach is to impose the minimum burden on the regulated community while ensuring that owners and operators will be able to demonstrate,

at the request of the implementing agency (MPCA), whether their UST systems are being managed in a manner that will protect human health and the environment. The MPCA favors this approach also. The reporting and notification requirements should help foster the self-implementation which underlies the technical rule. Given the large size of the UST regulated community, it is impractical and unnecessary to overburden the MPCA with periodic or routine reports from UST facilities that are operating properly and have no adverse environmental impacts. At the same time, it is reasonable that the MPCA have rapid access to reports and records to assist with a wide range of environmental protection activities from emergency response to routine inspections.

Release Detection

Part 7150.0300 General Requirements for All Underground Storage Tank Systems

New and existing UST systems properly installed, protected from corrosion, and equipped with spill and overfill protection will dramatically reduce UST system releases. Release detection is an essential backup measure to prevention, particularly for unprotected steel UST systems prior to upgrading or replacement. It is also very important for pressurized piping systems because they are prone to more frequent and larger releases than other types of piping systems. Six general categories of release detection methods have been successfully applied to USTs: tightness or precision tests, tank gauging systems, inventory control methods, ground-water monitoring, vapor monitoring, and interstitial monitoring. Site-specific conditions will generally dictate which method or methods are most appropriate for a given location. The choice of options helps maintain flexibility for both the implementing agency (the MPCA) and UST owner/operators.

Subpart 1. Methods. Owners and operators of new and existing UST systems must provide a method, or combination of methods, of release detection that: 1) can detect a release from any part of the tank and piping that routinely contains product; 2) is installed, calibrated, operated, and maintained according to manufacturer's instructions (including routine maintenance and service checks); 3) meets the performance requirements of the release detection part of the rule. The basis for this in the EPA rule is at 40 CFR Part 280.40(a).

In general, the rule allows use of a single properly installed and operated release detection method for tanks when testing is performed monthly. When less frequent monitoring is used, it must be backed up by use of monthly inventory control. Owners and operators may use multiple methods if they desire. Frequent use of a single detection method combined with prevention measures contained in other sections of the rule is sufficient to protect human health and the environment. The performance standards, design criteria, and limitations on methods contained in the rule are necessary and reasonable to ensure that optimum performance of each release detection method is achieved. Repeating a test monthly dramatically reduces the possibility of failing to detect a leak. Each test serves as a separate check of the integrity of the UST system. The EPA's research confirms the success of single methods in detecting releases from UST systems. The EPA states that for tanks and suction piping systems, one detection method, combined with prevention efforts, should virtually eliminate undetected releases.

Even with good efforts at prevention, operation of pressurized piping systems may still result in significant releases. The advantage of these systems is that they allow a large volume of product to be distributed quickly compared with suction systems. Because of the potential for pressurized UST

piping systems to lose large volumes of product quickly to the environment if a release is not detected, the rule requires existing and new pressurized lines to use both automatic line leak detectors and another leak detection method (either monthly monitoring or annual line tightness tests).

Subpart 2. Release notification. When a release detection method operated according to the requirements of this subchapter indicates a release may have occurred, owners and operators are required to notify the MPCA according to Minn. Stat. § 115.061 (1990). The basis for this in the EPA rule is at 40 CFR Part 280.40(a)(3). The purpose of this subpart is to bring together the release detection reporting requirements in the same subpart as the release detection technical requirements. Prompt release notification is a primary factor in limiting potentially costly corrective action. It is also a prerequisite for reimbursement of UST system owner/operators under Minn. Stat. § 115C.09 (1990).

Subpart 3. Release detection schedule. Release detection requirements for existing UST systems are phased in based on age (except pressurized pipe). New UST systems are required to have release detection upon installation. Hazardous material UST systems which are not regulated by 40 CFR Part 280 (see Minn. Stat. § 116.46, subd. 6 (1990) and proposed Minn. Rules pt. 7150.0030, subp. 24) must comply with the leak detection phase-in schedule or by 180 days after the date of publication of this proposed rule, whichever is later.

The EPA examined a variety of approaches to phase-in periods and generally recommended age as the most appropriate basis for the phase-in. The phase-in period from date of enactment (December 22, 1988) covers five years, short enough to ensure that the oldest tanks (those unprotected from corrosion) are monitored soonest, yet long enough to allow time for the release detection industry to respond to the demand for new equipment, for owners and operators of

existing tanks to plan their needs, and for the implementing agencies like the MPCA to develop their own programs. For the reasons discussed above, pressurized piping systems are put on a faster track for retrofit with line leak detectors (by December 1990). Retrofitting with line leak detectors is relatively easy and inexpensive, the devices are highly effective, and many systems are already equipped with the devices.

Subpart 4. Closure. Existing UST systems that cannot meet the above release detection requirements must close in accordance with proposed Minn. Rules pts. 7150.0400 to 7150.0440. The basis for this in the EPA rule is at 40 CFR Part 280.40(d). This is a reasonable requirement because most existing UST systems are not protected from corrosion and will eventually leak. The phase-in schedule in the rule is considered the maximum time that these systems should be allowed to operate without release detection. By the phase-in date appropriate to the tank age, the owner must either have provided release detection or properly close the UST system and complete a site assessment.

Part 7150.0310 Requirements for Petroleum Underground Storage Tank Systems

The proposed rule offers a variety of release detection methods for petroleum UST systems. New or existing UST systems can perform monthly monitoring using automatic tank gauges, vapor monitors, ground-water monitors, interstitial monitors, or other methods approved by the MPCA. During the ten-year upgrade period at existing tank sites that are not adequately protected from corrosion and lack spill and overfill equipment, the rule requires either annual tank tightness testing combined with monthly inventory controls or monthly monitoring. Owners of tanks meeting the standards for new or upgraded systems are required either to conduct tank tests every five years combined with monthly inventory controls for ten years following the date of installation or upgrade or until December 1998, whichever is later, or to

conduct monthly monitoring. In both cases, by the end of the ten-year period, these USTs must have approved monthly monitoring. An exception to the preceding is that tanks with a capacity of 1,000 gallons or less may use weekly manual tank gauging (discussed below) as the sole method of release detection. The basis for this in the EPA rule is at 40 CFR Part 280.41(a).

The general premise of the EPA's release detection requirements is that frequent sampling improves the chances of finding leaks and limits the length of time over which leaks can progress unchecked. Tanks must be monitored at least monthly unless the owner or operator chooses an option that includes less frequent tank tightness testing in combination with monthly inventory control. Inventory control (such as using a dipstick to measure product level in a tank) does not by itself meet the requirements for "monthly" monitoring and must be combined with periodic tightness testing. After considering the input of numerous commenters, the EPA determined that a monthly tank monitoring interval would provide adequate environmental protection without being unduly burdensome. Thus, monthly monitoring is the release detection baseline for all new and existing petroleum UST systems.

Frequent tank tightness testing is not practical because it often requires extensive preparation, including a shutdown of operations. However, it is a sensitive method which, when done properly, can provide very accurate results. Manual inventory control (dipsticking) is less sensitive but can provide nearly continuous leak detection that can reliably detect larger releases. The combination of the two techniques helps compensate for each component's disadvantages.

In addition to the other release detection methods allowed under the rule, weekly manual tank gauging is permitted for tanks with a capacity of 1,000 gallons or less. An EPA study found that weekly tank gauging can detect leaks

as small as 0.2 gallons per hour with reasonable assurance for smaller tanks. This method, which involves selecting a specified "down-time" (which relates to tank size), such as a weekend during which no product is added to or withdrawn from the tank, is particularly effective for tanks storing used oil. It is reasonable to allow this option for smaller tanks with less rapid turnover of product because it is simple to implement, is cost-effective, and provides the same level of protection as other monthly monitoring methods for these smaller tanks.

This part of the rule also reflects the importance of preventing and rapidly detecting piping releases. The basis for this in the EPA rule is at 40 CFR Part 280.41(b). Pressurized piping must have a release detection device that monitors the line continuously and automatically shuts off or restricts product flow or sounds an alarm when there is an indication of a leak. The owner and operator must also conduct either monthly monitoring or an annual line tightness test. The monthly monitoring may include vapor monitoring, ground water monitoring, interstitial monitoring or other methods that meet the performance standard or are approved by the MPCA. Performance standards for piping release detection methods are contained in part 7150.0340 and are discussed below. For pressurized systems, one release detection method can be used as the sole method if it can meet both the hourly release detection requirement and the annual or monthly release detection requirements. For example, double-walled piping with continuous interstitial monitoring that meets the performance standard is an acceptable option for pressurized piping and would not require shutoffs, restrictors, or tightness tests. However, such a system would have to be equipped with an alarm that will indicate when a release to the interstitial space has begun.

Suction piping systems meeting the "no leak" criteria described below are exempt from release detection. Other suction systems must operate with monthly release detection or a line tightness test every three years. To meet the "no leak" criteria, suction piping must meet the following standards: 1) the below-grade piping must operate at less than atmospheric pressure; 2) the below-grade piping must be sloped so that the contents of the pipe will drain back into the tank if suction is released; 3) there may be only one check valve in each suction line and it must be located directly below and as close as practical to the suction pump; and 4) a method must be provided to allow compliance with the above to be determined (for example, the check valve must be readily inspectable).

Suction distribution systems are intrinsically safer than pressurized systems because product is transferred at less than atmospheric pressure by a pump near the dispenser drawing product from the tank by suction. System failures generally result in air or ground water flowing into the pipe rather than product being released during operation. Although the risk to the environment from operating a pressure distribution system is higher, such systems have the advantages of being highly efficient and not subject to vapor lock as with some suction systems. In summary, it is reasonable to allow operation of either suction or pressurized piping distribution systems as a part of UST system design, provided effective release detection is provided. The rule is structured to allow owner/operators several options for either system, recognizing the unique advantages and disadvantages of each.

Part 7150.0320 Requirements for Hazardous Material Underground Storage Tank Systems

Tanks storing hazardous materials as defined in proposed Minn. Rules pt. 7150.0030, subp. 24 must meet the release detection requirements for petroleum

UST systems described in part 7150.0310 by the dates established in part 7150.0300. The basis for this in the EPA rule is at 40 CFR Part 280.42(a). By the end of 1993, hazardous material UST systems require installation of monitoring which meets requirements that apply to new or upgraded petroleum UST systems. By the end of 1998 (the date by which all existing petroleum USTs must be upgraded to meet new petroleum UST standards) existing hazardous material USTs must be upgraded to meet standards for monitoring of new hazardous material USTs established by this part, as follows:

1) hazardous materials UST systems must have secondary containment which can contain materials released from the tank and piping until they are detected and removed, prevent their release to the environment at any time during the operational life of the system, and be checked for evidence of a release monthly;

2) double-walled tanks must be designed, constructed and installed to contain a release from any part of the inner tank within the outer wall and detect any failure of the inner wall;

3) external liners, including vaults, must be designed, constructed and installed to contain 100 percent of the capacity of the largest tank within its boundary, prevent the interference of precipitation or ground water intrusion with the ability to contain or detect a release, and surround the tank completely;

4) underground piping must be equipped with secondary containment and, if it conveys regulated substances under pressure, it must be equipped with automatic line leak detection;

5) other methods of release detection may be used if owner/operators can demonstrate that the alternate method is able to detect a release of the hazardous material as effectively as the methods allowed in part 7150.0330 can

detect a release of petroleum, can provide information to the MPCA on corrective action technologies, health risks, chemical and physical properties of the hazardous material and characteristics of the UST site, and can obtain approval from the MPCA commissioner to use the alternate release detection method before beginning installation and operation.

Release detection and corrective action technologies are not as readily understood or widely used for the broad range of hazardous materials as they are for petroleum. It is reasonable that a more conservative approach, such as secondary containment, be applied to UST systems storing hazardous materials. The proposed rule does allow for owner/operators to use alternate methods of release detection if sufficient documentation of performance is submitted to the implementing agency. The agency will then use these factors to guide its decision on whether to allow the alternate release detection method for the hazardous material being stored.

From the technical perspective, secondary containment is desirable because it ensures that all USTs storing hazardous materials will be provided with effective detection methods and, if a release occurs from the primary containment structure to the interstitial space, corrective action will be simplified because it is very unlikely to impact the surrounding environment. The EPA allowed single-walled tanks and release detection for storage of petroleum because of its relative ease of detection and the belief that small releases could be cleaned up relatively easily. Information about the performance of release detection and corrective action methods for hazardous materials is not as readily available. More importantly, there is limited field experience with detection methods for hazardous material tanks. Many hazardous materials are more toxic than petroleum and may be less likely than petroleum to

be detected by taste or odor. When replacing hazardous material tanks, industry has generally chosen to put them aboveground, in vaults, or in double-walled tanks.

In summary, the approach to regulating storage of hazardous materials in USTs is similar to that taken with regard to storage of hazardous wastes under 40 CFR Parts 264 and 265 (1989)(Subtitle C of RCRA). The performance-oriented approach to monitoring hazardous material USTs is intended to provide enough flexibility to control the greater number and variety of hazardous material tanks without the use of a permitting program, while at the same time providing a similar level of protection as mandated by the tank requirements under Subtitle C of RCRA.

Part 7150.0330, Methods of Release Detection for Tanks

The proposed rule recognizes eight acceptable methods of release detection for the UST part of the tank system. These are, in the order they appear in the rule: inventory control, manual gauging, tightness testing, automatic gauging, vapor monitoring, ground water monitoring, interstitial monitoring, and other approved methods. Each method is discussed in more detail below. The basis for this in the EPA rule is at 40 CFR Part 280.43.

1) Product inventory control. Product inventory control must be used in conjunction with tank tightness testing because neither method alone meets the requirements for release detection for tanks. Inventory control is like balancing a checking account. Every month the product volume is balanced between what is delivered and what is sold from the tank with daily measurements of tank volume taken with a gauge stick. If the "account" does not balance, the tank may have a leak. UST inventories are determined in the morning and in the evening or after each shift by using a gauge stick and the data is recorded on a ledger form. The level on the gauge stick can be converted to a volume of

product in the tank using a calibration chart, which is often furnished by the UST manufacturer. The amounts of product delivered to and withdrawn from the tank each day are also recorded. At least once each month, the gauge stick data and the sales and delivery data are reconciled and the month's overage or shortage is recorded. If the overage or shortage is greater than or equal to 1.0 percent of the tank's flow-through volume plus 130 gallons of product, the UST may be leaking.

In addition to the above, the following requirements apply. Inventory control must be used in conjunction with periodic tank tightness testing. Refer to proposed Minn. Rules pt. 7150.0310. The gauge stick should be long enough to reach the bottom of the tank and marked so that the product level can be determined to the nearest one-eighth of an inch. A monthly measurement must be taken to identify any water at the bottom of the tank. Deliveries must be made through a drop tube that extends to within one foot of the tank bottom. Finally, product dispensers must be calibrated to standards for meter calibration adopted by the Minnesota Department of Public Service, Division of Weights and Measures at part 7600.6800 (1990).

The above requirements are reasonable and necessary to enable UST owners to conduct accurate and reliable inventory control and, when combined with tank tightness testing, to provide effective leak detection. EPA studies determined that when the monthly criteria of 1.0 percent of the tank's flow-through plus 130 gallons is applied to product inventory control, the false alarm rate is about 5 percent. In other words, 5 times out of 100, exceedance of the criteria would indicate that a release had occurred when, in fact, it had not. This is within the same accuracy level as the other release detection methods described below.

2) Manual tank gauging. Manual tank gauging can be used only for smaller tanks. Tanks up to 1,000 gallons in size can use this method alone, but tanks with capacities from 1,001-2,000 gallons can use manual tank gauging only when it is combined with tank tightness testing. Manual tank gauging cannot be used for tanks over 2,000 gallons in size, although EPA research in this area has shown that the method may be effective for larger tanks but with decreasing accuracy. To conduct manual tank gauging, four liquid level measurements must be taken weekly, two at the beginning and two at the end of at least a 36-hour period during which nothing is added to or removed from the tank. The average of the two consecutive ending measurements is subtracted from the average of the two beginning measurements to indicate the change in product volume. Every week, the calculated change in tank volume is compared to the values in a standards table which is based on tank capacity. If the calculated change exceeds the weekly standard, the UST may be leaking. Monthly averages of the four weekly test results must be compared to the monthly standard in the same way.

It is reasonable to allow manual tank gauging as an option for smaller tanks because it is straightforward, inexpensive, and achieves the same degree of accuracy as other methods. For tanks smaller than 1,000 gallons, manual tank gauging can detect a 0.2 gallon per hour release with a probability of detection of 0.95 and a probability of false alarm of 0.05. For tanks with capacities between 1,001 and 2,000 gallons, the method achieves the performance of inventory control. Therefore, it is reasonable for owners of these tanks that they meet the inventory control requirements by supplementing manual tank gauging with periodic tank tightness testing.

3) Tank tightness testing. Tank tightness testing (or another test of equivalent performance) must be capable of detecting a 0.1 gallon per hour leak

rate from any part of the tank that routinely contains product while accounting for the effects of thermal expansion or contraction of the product, vapor pockets, tank deformation, evaporation or condensation, and the location of the water table. Probabilities of detection and false alarm as described in part 7150.0300 also apply.

Of all the allowable methods of release detection, tank tightness testing (also called precision testing or volumetric testing) may be the most technically complex. The premise of a volumetric tank test is that any change in the volume of liquid in a tank can be interpreted as a leak. Detection of these leaks is difficult because there are many physical factors which produce volume changes that can be mistaken for leaks. While acknowledging the uncertain performance of tank testing, the EPA believed that it was a demonstrated and effective method that would be available to meet the large demand for release detection following promulgation of the rule. The EPA considered the issue of tank testing performance important enough that it established a test facility in Edison, New Jersey to "test the testers." During 1986 and early 1987, manufacturers of 25 of the 43 commercially available tightness testing systems participated in an evaluation of their systems at the Edison laboratory. The details of the testing protocols and results of the program have been described in detail in publications by the EPA and contractors the EPA hired to complete certain portions of the work.

Many of the volumetric tank tests on the market today claim the ability to detect leaks as small as 0.05 gallons per hour. This is the "practice" recommended by the National Fire Protection Association (NFPA) in NFPA Bulletin 329. The results of the Edison testing showed that most existing volumetric methods will detect 0.05 gallon per hour leaks at least a portion of the time. The problem with the NFPA criterion is that it does not specify the probability

with which the 0.05 gallon per hour leak rate must be detected. As such, the confidence level associated with this leak rate is unknown. After extensive research, the EPA chose to establish a performance standard for volumetric tank testing of 0.1 gallon per hour with a probability of detection of 95 percent and a probability of false alarm of 5 percent. In effect, the EPA acknowledges the uncertainty inherent in volumetric testing and in setting the probabilities of detection and false alarm, says that five times out of 100 tests of the same tank, the results of the test can be incorrect (the tank declared tight when it is leaking and vice versa) and the standard is still met. This is the main reason why tightness testing must generally be combined with inventory control methods to meet the release detection requirement and why the EPA set a time limit for use of this method as a means of release detection. Refer to part 7150.0300.

Comparison to the EPA's performance standard shows that the NFPA criterion would allow more leaks to go undetected and also cause more false alarms. The EPA's final performance standard is intended to eliminate the use of poor tightness test methods, ensure that more leaks are detected, and cause fewer false alarms. It is reasonable in that it provides for better protection of human health and the environment while ensuring that unnecessary burdens on owners, operators and implementing agencies are minimized.

4) Automatic tank gauging. Automatic tank gauges are sized to specific tanks and are permanently mounted through one of the tank bung holes. The product level and temperature are measured continuously and automatically analyzed and recorded by a computer. In the inventory mode, the automatic gauge replaces the use of the gauge stick to measure product level and perform inventory control. This mode records the activities of an in-service tank,

including deliveries. In the test mode, the tank is taken out of service and the product level and temperature are measured for at least one hour.

Automatic tank gauges must be able to detect a leak at least as small as 0.2 gallons per hour with a probability of detection of 95 percent and a probability of false alarm of 5 percent. This represents a standard which current equipment can generally meet. Since the product level test is conducted at least monthly, the performance of this method can statistically equal or exceed the sensitivity achieved by periodic tank testing, even though the monthly performance standard is less stringent. Inventory control is still required in conjunction with product level monitoring using this method since product level monitoring alone using automatic gauging is not as sensitive as tightness testing or some of the external methods discussed below. This requirement is not burdensome because automatic gauges routinely collect the information needed to conduct inventory control.

5) Vapor monitoring. Vapor monitoring measures vapors from leaked product in the soil around the tank to determine if the tank is leaking. Fully automated vapor monitoring systems have permanently installed equipment to continuously gather and analyze vapor samples and respond to a release with a visual or audible alarm. Manually operated vapor monitoring systems range from equipment that immediately analyzes a gathered vapor sample to devices that gather a sample that must be sent to a laboratory for analysis. Manual systems must be used at least once a month to monitor a site.

Part 7150.0330 uses the term "vapor monitoring point" instead of "monitoring well" used at 40 CFR Part 280.43 in order to distinguish these points from wells which monitor for liquids on the ground water which must meet the provisions of Minn. Rules ch. 4725 (1990) and requirements discussed below under "Ground Water Monitoring." High ground water conditions can interfere with proper operation

of vapor monitoring points. If high ground water is a factor at the UST site (less than 20 feet from the surface), monitoring wells should be installed rather than vapor monitors, assuming the site meets the other conditions for monitoring well installation.

Regulatory requirements for installation of vapor monitoring points are as follows. The UST backfill must be sand, gravel or another material that will allow the vapors to easily move to the monitor. The backfill should be clean enough so that previous contamination does not interfere with the detection of a current leak. The substance stored in the UST must vaporize easily so that the vapor monitor can detect a release. High ground water, excessive rain, or other sources of moisture must not interfere with the operation of vapor monitoring for more than 30 consecutive days. The UST site must be assessed to ensure compliance with the preceding requirements to establish number and positioning of vapor monitoring points so that releases within the excavation zone from any part of the tank that routinely contains product will be detected. Finally, vapor monitoring points must be clearly marked and secured to prevent unauthorized access and tampering.

Although there are still not enough data to specify a more complete performance standard for this method (in terms of probability of detection, false alarm and leak rate), the method can be a very sensitive and effective monitoring tool, especially at "virgin" sites where previous contamination by petroleum hydrocarbons is not a factor. Vapors are often a good precursor of a release, moving ahead of the contaminant plume on the ground water. Early detection of vapors in these external monitors is straightforward, inexpensive, and can assist UST owner/operators in limiting corrective action costs.

6) Ground water monitoring. Ground water monitoring involves the use of one or more monitoring wells placed in the water table close to the UST. The

wells are checked at least monthly for the presence of product that has leaked from the UST and is floating on the ground water surface. The two main components of a monitoring well system are the well itself, typically two to four inches in diameter, and the monitoring device. Before installation, a site assessment is necessary to determine the soil type, ground water depth and flow direction, and the general geology of the site. Detection devices may be permanently installed in the well for automatic, continuous measurement of released product. Detection devices are also available in manual form. Manual devices range from a bailer (used to collect a liquid sample for visual inspection) to a device that can be inserted into the well to electronically indicate the presence of leaked product. Manual devices must be operated at least once a month.

Ground water monitoring wells must be installed and tested according to provisions of the Minnesota Water Well Construction Code, Minn. Rules ch. 4725 (1990), as well as the following requirements. Ground water monitoring can only be used if the stored substance does not easily mix with water and floats on top of water. If ground water monitoring is to be the sole method of leak detection, the ground water must not be more than 20 feet below the surface and the soil between the well and the UST must be sand, gravel or other coarse materials. Wells should be placed in or very near to the UST backfill so that they can detect a leak as quickly as possible. Product detection devices must be able to detect one-eighth inch or less of leaked product on top of the ground water. Wells must be designed and placed based on a site assessment and sealed to keep them from becoming contaminated from outside sources. Well screens must be designed to prevent migration of natural soils or filter pack into the well and to allow the entry of the regulated substance on the water table into the

well under both high and low water table conditions. Finally, wells must be clearly marked and secured.

The primary concern with ground water monitoring is that the resource being protected is the medium in which the release is detected. However, the method is in widespread use and, if properly designed and implemented, can successfully detect small releases. The one-eighth inch detection requirement was selected as a performance standard because it represents the sensitivity of existing automated equipment, not because it is an acceptable release. As with vapor monitoring, ground water monitoring has proven its worth as an effective and inexpensive method of external monitoring which can provide owner/operators with early detection and help reduce corrective action expenses.

7) Interstitial monitoring. Interstitial monitoring is required for hazardous material USTs with secondary containment systems. Secondary containment is currently an option for use with petroleum USTs. Secondary containment provides a barrier between the tank and the environment. The barrier holds released product between the tank and the barrier long enough for the release to be detected. Barriers include double-walled tanks in which an outer tank partially or completely surrounds the primary tank, leakproof excavation liners (but not clay or other earth materials alone) that partially or completely surround the tank, leakproof liners that closely surround the tank ("tank jackets"), and concrete vaults.

Monitors are used to check the area between the tank and the barrier for evidence of a release and alert the operator if a release is suspected. Some monitors indicate the physical presence of the released product, either liquid or gaseous. Others check for a change in condition that indicates a hole in the tank, such as a loss of pressure or a change in the level of an indicator liquid between the walls of a double-walled tank. Monitors can be as simple as a

dipstick used at the lowest point of the containment to see if product has leaked and pooled there. Monitors can also be automated systems that continuously check for evidence of a release.

To use the interstitial monitoring option, the barrier must be immediately around or beneath the tank, the monitor must be checked at least monthly, and the barrier if a double-walled system must be able to detect a release through the inner wall. If an excavation liner is used for secondary containment, it must: direct a release toward the monitor; not allow stored product to pass through it any faster than 10(-6) centimeter/second; be compatible with the stored product; not interfere with the cathodic protection system of a steel UST; not be disabled by moisture; always be above the ground water and the 25-year flood plain; and, have clearly marked and secured monitoring wells and vapor monitoring points if they are used. Although initially this may appear to be a somewhat lengthy and restrictive list of conditions, most interstitial monitoring systems for secondary containment already meet these requirements. Correct installation may be fairly difficult, especially for "custom-designed" secondary containment systems. However, once in place, secondary containment with interstitial monitoring is a highly reliable, inexpensive system to maintain. Of all the monitoring options discussed, it is probably most likely to provide early detection of a release and thus minimize corrective action costs.

8) Other approved methods. As is the approach elsewhere in the proposed rule, flexibility is provided to owner/operators who can demonstrate to the implementing agency the effectiveness of alternate compliance methods that meet certain performance standards. Here the established performance standard is similar to the one used for automatic tank gauging (see above). The alternate method must detect a 0.2 gallon per hour leak rate or a release of 150 gallons

within a month with a probability of detection of 0.95 and a probability of false alarm of 0.05. The MPCA is requiring prior approval of the commissioner before implementation of an alternate method. The performance standard and prior approval should foster consistency among methods while offering additional flexibility for owner/operators who choose new or improved technologies of equivalent protection and helping to spur innovation.

Part 7150.0340, Methods of Release Detection for Piping

The general release detection requirements for pressure and suction lines are discussed under part 7150.0310 above. This section discusses performance standards for those release detection methods. The basis for this in the EPA rule is at 40 CFR Part 280.44. Methods which alert the operator to the presence of a release by restricting or shutting off the flow of the regulated substance through the piping system or by triggering an audible or visual alarm may be used only if they detect leaks of three gallons per hour at ten pounds per square inch (psi) line pressure within one hour. An annual test of the operation of the leak detector must be conducted according to the manufacturer's requirements. A periodic test of piping may be conducted only if it can detect a 0.1 gallon per hour leak rate at one and one-half times the operating pressure. In addition, other methods of release detection such as vapor monitoring or ground water monitoring may be used if they are designed to detect a release from any part of the underground piping that routinely contains regulated substances.

The performance standard for automatic piping release detection methods including flow restrictors, shutoff devices, and interstitial or external monitors, were selected based on a study by the EPA of the behavior of pressurized lines and manufacturer's written claims. The value of 10 psi was also selected because it is the pressure at which a typical line leak detector

operates. Automatic line leak detectors must be capable of checking for releases hourly and either restrict or shutoff flow of product or be equipped with an audible or visual alarm. The hourly detection frequency was selected because pressurized lines can release large volumes of product quickly, so very frequent monitoring is necessary during operation to protect public health and the environment. Most pressurized line monitoring equipment in use currently meets these requirements, so implementation will not be difficult.

Work conducted at the EPA's Edison test laboratory has demonstrated that line tightness test methods will meet the 0.1 gallon per hour performance standard. Performance standards for line release detection must be stated in terms of line operating pressure. The value of 1.5 times the operating pressure was chosen for the line tightness test because most operators are currently performing tightness tests at this pressure, it is the procedure recommended by NFPA Bulletin 329 for hydrostatic testing, and it covers the range of line operating pressures, including suction lines. For safety reasons, all line tightness tests should be performed at positive pressure, not a vacuum. For example, most suction lines operate at 3 to 5 psi negative pressure; tightness tests should be conducted at about 7 psi positive pressure.

Part 7150.0350, Release Detection Record Keeping

Part 7150.0240 describes general record keeping requirements for UST facilities. This part provides details of specific record keeping for release detection systems. The basis for this in the EPA rule is at 40 CFR Part 280.45. The proposed rule addresses four areas where release detection record keeping is necessary. The EPA requirements allow the implementing agency to establish time periods during which records must be kept. The MPCA believes record keeping to be a very important part of regulatory compliance since the emphasis of the rule is on self-monitoring and the large number of UST sites prohibits site

inspections for all but a few representative facilities. The areas of release detection record keeping and length of time they must be kept are as follows:

1) Written performance claims pertaining to any release detection system used and the manner in which these claims have been justified or tested by the equipment manufacturer or installer must be maintained as long as the system is being used to comply with the requirements of the rule.

2) Results of any sampling, testing, or monitoring must be maintained for ten years.

3) Written documentation of calibration, maintenance and repair of release detection equipment permanently located on-site must be maintained for ten years after servicing is completed. Schedules of required calibration and maintenance provided by the release detection equipment manufacturer must be maintained for as long as the system is being used to comply with the requirements of the rule.

4) Documentation of the commissioner's approval of alternate release detection methods under part 7150.0330 must be maintained.

The MPCA has learned from the investigation of over 3,000 tank release sites in recent years that a documented record of operation is important in determining when releases occurred, who responsible persons are, and the extent to which operational practices may have contributed to or helped mitigate a release. If records are missing or incomplete, considerable staff time and state resources can be spent in trying to unravel the history of operation of a release site. The MPCA believes that the documentation required and the time frames established are both necessary and reasonable.

Out-of-Service Underground Storage Tank Systems and Closure

Part 7150.0400, Temporary Closure

The principal objective of the UST system closure requirements is to identify and contain existing contamination and to prevent future releases from UST systems no longer in service. UST systems improperly closed in the past have had undetected releases that later required corrective action. Because many existing UST systems are expected to close in the next five to ten years, it is particularly important to require proper management procedures for out-of-service UST systems so that contamination due to improperly closed UST systems can be prevented from posing a threat of additional future releases and needed corrective action can be identified and taken. The basis for this in the EPA rule is at 40 CFR Part 280.70.

Subpart 1. The Minnesota Uniform Fire Code (Minn. Rules ch. 7510 (1990)) incorporates the National Uniform Fire Code by reference. The national code in Section 79.113 (Abandonment and Status of Tanks) contains certain requirements for tank closure which are similar to the requirements of this subchapter. Subpart 1 makes clear that owner/operators must comply with the fire code requirements in the area of temporary closure of UST systems.

Subpart 2. Operation and maintenance during temporary closure. When an UST system is temporarily closed, owners and operators must continue operation and maintenance of corrosion protection and release detection systems. Release detection is not required as long as the UST system is empty. For purposes of temporary closure, an UST system is considered empty when all materials have been removed using commonly employed practices (such as pumping) so that no more than 2.5 centimeters (one inch) of residue, or 0.3 percent by weight of the total capacity of the UST system, remain in the tank. For the purposes of temporary closure, the term "empty" is defined by incorporating the

definition of "empty container" set forth in EPA regulations under Subtitle C of RCRA. This definition should be adequate to ensure that regulated substances remaining in a temporarily closed tank will not pose an unreasonable risk to human health and the environment if a release occurs during the temporary closure period. Note that to permanently close a tank (part 7150.0410, below) owners and operators must empty and clean it by removing all liquids and accumulated sludges.

Subpart 3. Tanks out of service 90 days. When an UST system is temporarily closed for 90 days or more, owners and operators must also leave vent lines open and functioning and cap and secure all other lines, pumps, passageways and ancillary equipment. It is important for safety reasons that even a tank which is temporarily empty of product have vent lines open and functioning so that vapors will not accumulate within the tank and cause a fire or explosion hazard. At the same time, other tank openings which may not otherwise be protected, such as fill lines, must be capped and secured to prevent unauthorized access and tampering.

Subpart 4. Tanks out of service one year. When an UST system is temporarily closed for more than 12 months, owners and operators must permanently close the system if it does not meet either performance standards in part 7150.0100 for new UST systems or upgrading requirements in part 7150.0110, except that spill and overfill equipment requirements do not have to be met. Permanent closure must meet the requirements of parts 7150.0410 to 7150.0440 unless the commissioner provides an extension of the 12-month temporary closure period. Before owner/operators can apply for such an extension, a site assessment must be conducted according to part 7150.0420. Since spilling and overfilling associated with product transfer should not be a problem around tanks which have been properly temporarily closed, UST systems are not required

to satisfy spill/overfill provisions for new and upgraded systems in order to be excluded from the 12-month closure provisions.

Part 7150.0410, Permanent Closure and Changes-in-Service to Storage of Nonregulated Substances

Subpart 1. Similar to subpart 1 under part 7150.0400 above, owners and operators must comply with provisions of the Minnesota Uniform Fire Code concerning permanent closure and changes-in-service. These provisions (referenced to Sec. 79.113(e) of the National Uniform Fire Code) are consistent with the requirements of subpart 3, below.

Subpart 2. Notice of closure or change in service. At least 10 days before beginning either permanent closure or a change-in-service under subparts 3 and 4, owners and operators must notify the commissioner of their intent to permanently close or make the change-in-service, unless such action is in response to corrective action. This subpart is similar to the advance notice for installation required by part 7150.0120, subpart 1. This is a reasonable requirement to enable the MPCA to schedule inspection of UST removals and coordinate technical assistance efforts with owners/operators, local authorities and others. The required assessment of the excavation zone under part 7150.0420 must be performed after notifying the commissioner but before completion of the permanent closure or a change-in-service.

Subpart 3. Permanent closure. To permanently close a tank, owners and operators must empty and clean it by removing all liquids and accumulated sludges. All tanks taken out of service permanently must also be either removed from the ground or filled in-place with an inert solid material. This is consistent with the federal rule at 40 CFR Part 280.71. The Division of State Fire Marshal has issued a policy statement (October 5, 1987) which states, in part: "Tanks removed from service for a period of one year are considered to be

abandoned and must be removed from the ground. Where tanks are located beneath significant structures, or in a legally established right-of- way, abandonment in place may be considered acceptable if approved by both the State Fire Marshal and the local authority. The two acceptable means of abandoning tanks in place are filling the tank with either a cement slurry or polyurethane foam. The tank must be completely filled with the inert substance." The MPCA supports this policy from an environmental perspective, believing that tanks abandoned in place should require a site assessment. Complete removal allows the excavation as well as the tank itself to be inspected for signs of leakage. Removal also facilitates soil sampling. Filling in-place will normally require a soil boring rig to be brought in to obtain environmental samples (see part 7150.0420, below) at increased cost to the tank owner/operator.

Subpart 4. Storage of nonregulated substances. Continued use of an UST system to store a nonregulated substance is considered a change in service and must be reported to the MPCA in accordance with Minn. Stat. § 116.48, subd. 3 (1990) and part 7150.0120 of this proposed rule. Before a change in service, owners and operators must empty and clean the tank by removing all liquid and accumulated sludge and conduct a site assessment according to part 7150.0420. This subpart will prevent sound tanks from being forcibly discarded, even though this will serve no environmental purpose. At the same time, it will help assure that such changes in service are not made unless the tank is clean and a site assessment has been made.

Subpart 5. Certified removers. Owners and operators must ensure that persons performing permanent closures under subpart 3 or changes in service under subpart 4 are in compliance with certification requirements imposed by the MPCA under Minn. Stat. § 116.491 (1990) and Minn. Rules ch. 7105 (State Register, January 8, 1990) certified removers must furnish copies of

certificates issued by the MPCA to the owner/operator prior to beginning work. These requirements will help ensure that persons removing USTs are qualified to do so by having received training and certification to perform closure work and that owners/operators are aware of their qualifications.

Subpart 6. Tank system closure certification. Owners and operators must ensure that the person who removes or otherwise closes an UST system certifies on the notification form that the methods used to close or otherwise remove the tanks and piping comply with part 7150.0410, subparts 3 to 5. This requirement is similar to those of part 7150.0120, subparts 4 and 5, which apply to certification of UST systems by installers and repairers.

Subpart 7. This subpart merely indicates that cleaning and closure procedures listed in the referenced documents must be used as guidance in complying with this part.

Part 7150.0420, Assessing the Site at Closure or Change in Service

When removing or closing a tank or making a change in service to storage of a nonregulated substance, owners and operators must measure through laboratory analysis, for presence of a release where contamination is most likely to be present at an UST site. The federal rule, as set forth in 40 CFR Part 280.72, specifies the barest minimum requirements needed to characterize contamination at an UST site. The MPCA has specified how measurements of site soils and/or ground water must be made to give owners and operators some idea of what is an acceptable procedure for site assessment at closure. The MPCA guidance document, "Sampling Requirements During Tank Closure" elaborates on this procedure. It is the MPCA's position that measurements of site characteristics using field instruments (such as a photoionization detector to measure for presence of petroleum vapors in an excavation) can be a useful tool but are not substitutes for laboratory analyses.

If contaminated soils, contaminated ground water, or free product as a liquid or vapor is discovered by this measurement or by any other manner, owners and operators must notify the agency immediately and begin corrective action according to Minn. Stat. § 115.061. It is reasonable that the criteria for initiating corrective action during closure activities should be the same as the criteria for initiating corrective action at any other time during the operational life of an UST system.

In selecting sample types, sample locations, and measurement methods, owners and operators must consider such site-specific variables as the method of closure, the nature of the stored substance, the type of backfill, the depth to ground water, and other factors appropriate for identifying the presence of a release. The requirements of this subpart are also satisfied if one of the external monitoring methods allowed in part 7150.0330, items F and G, is operating according to the rule at the time of closure and indicates no release has occurred. Since most older UST sites which have not been upgraded will not have this instrumentation, soil and/or ground water monitoring within the UST excavation zone will generally be required as a part of proper closure. The purpose of the site assessment is directed more at showing the site is "clean" than to prove that a release has occurred. Often it is possible to confirm a release by examining the tank condition or visually assessing the excavation zone for stained soils, unusual odors, a petroleum sheen on the ground water, and so on.

Part 7150.0430, Applicability to Previously Closed Underground Storage Tank Systems

When directed by the MPCA commissioner, the owner and operator of an UST system permanently closed before December 22, 1988, must assess the excavation zone and close the UST system according to part 7150.0420 if releases from a

previously closed UST may, in the judgment of the commissioner, pose a current or potential threat to human health and the environment. The MPCA and the EPA have documented cases where previously closed UST sites have been the source of releases which have later contaminated the environment. An EPA examination of state UST program incident reports between 1970 and 1984 revealed approximately 300 releases that implicated abandoned UST systems. Because there is a reasonable probability that releases from such tanks may pose a threat to human health and the environment, the application of the closure provisions to these tanks, and in particular the site assessment requirements, is necessary and appropriate.

Part 7150.0440, Closure Records

Owners and operators must maintain records according to part 7150.0240 (refer also to 40 CFR Part 280.34 and 40 CFR Part 280.74) that are capable of demonstrating compliance with the closure requirements. The results of the excavation zone assessment required in part 7150.0420 must be maintained for at least three years after completion of permanent closure or change in service. Records may be kept by the owners and operators who took the UST system out of service, by the current owners and operators of the site, or (as in the case of a site no longer in existence) by mailing the records to the commissioner if they cannot be maintained at the closed facility.

As has been indicated previously, site records are one of the primary means of reconstructing the history of an UST site and may be invaluable should a closed site later become the source of an environmental problem or if an adjoining site should have a release which would need to be investigated. Owner/ operators may need to produce these records as a means of helping to limit their own liability in the case of future UST release investigations.

Part 7150.0500, Incorporation by Reference

This part lists those documents that are incorporated by reference in the proposed rule. This part is reasonable because it informs those persons affected by the rules that these documents can be found in the State of Minnesota Law Library, as well as providing an address where they can be obtained. Because these documents can be subject to frequent change, this is also indicated to alert individuals of this fact and to inform them that amendments to these documents are also incorporated by reference.

The legislature has indicated its approval of this approach in Minn. Stat. § 645.31, subd. 2 (1990), which states that a statute (or rule) that adopts another law by reference "also adopts by reference any subsequent amendments of such other law, except where there is clear legislative intention to the contrary." By only adopting those amendments to the industry codes and standards which are adopted by the substantive federal or state laws, the rule falls within the limits of what the legislature has explicitly approved in § 645.31. The Minnesota Supreme Court has twice in recent years acknowledged that adoption of future amendments to standards being incorporated by reference is particularly appropriate when, as in this case, the goal is to coordinate state and federal requirements. Minnesota Recipients Alliance v. Noot, 313 N. W. 2d 584, 586-87 (Minn. 1981); Minn. Energy & Economic Dev. Auth. v. Printy, 351 N. W. 2d 319, 351-52 (Minn. 1984).

The preamble to 40 CFR Part 280 contains a discussion by the EPA concerning reliance on codes developed by nationally recognized organizations. The EPA did not receive any comments that were against or critical of the use of industry codes. The EPA's approach to the UST technical rule is to expand the use of and reliance on industry codes in order to provide for a means of improving existing methods or developing alternative methods of UST system management. The EPA

states in the preamble that they want to provide a flexible approach to codemaking by relying on nationally recognized organizations to develop new and improved codes and practices through a public process.

The EPA interprets a "nationally recognized organization" to mean a technical or professional organization that has issued standards formed by the consensus of its members. The organization should ensure consideration of all relevant viewpoints and interests, including those of consumers and existing or potential industry participants, and the resulting standards should be widely accepted and technically sound. Thus, any code developed by an organization should be based on a broad range of technical information, and performance criteria should be central elements of the resulting standards. Examples of such nationally recognized organizations which have codes and standards referenced in 40 CFR Part 280 as well as the proposed Minnesota rule include:

American Petroleum Institute (API)

Association of Composite Tanks (ACT)

National Association of Corrosion Engineers (NACE)

National Fire Protection Association (NFPA)

National Leak Prevention Association (NLPA)

Petroleum Equipment Institute (PEI)

Steel Tank Institute (STI)

Underwriters Laboratory (UL)

The federal Office of Management and Budget (OMB) has discussed regulatory codes and standards (OMB Circular A119, October 26, 1982). The OMB encourages the reliance on voluntary standards, commonly referred to as industry standards or consensus codes. The developers of such codes are called voluntary standards bodies and are defined by the OMB to include private sector, domestic, or

multinational organizations--such as nonprofit organizations; industry associations, professional and technical societies, institutions, or groups; and recognized testing laboratories--that plan, develop, establish, or coordinate voluntary standards. The EPA interpretation of the phrase "nationally recognized organization" is intended to encourage the development and use of voluntary standards.

V. SMALL BUSINESS CONSIDERATIONS IN RULEMAKING

Minn. Stat. § 14.115, subd. 2 (1990) requires the MPCA, when proposing rules which may affect small businesses, to consider the following methods for reducing their impact on small businesses:

1. the establishment of less stringent compliance or reporting requirements for small businesses;

2. the establishment of less stringent schedules or deadlines for compliance or reporting requirements for small businesses;

3. the consolidation or simplification of compliance or reporting requirements for small businesses;

4. the establishment of performance standards for small businesses to replace design or operational standards required in the rule; and

5. the exemption of small businesses from any or all requirements of the rule.

The proposed rules may effect small businesses as defined in Minn. Stat. § 14.115 (1990). However, the benefits of the rule in terms of protecting the environment and public health and safety are expected to be considerable as discussed in the Statement of Need. In development of 40 CFR Part 280, the EPA conducted a Regulatory Flexibility Analysis (required by 5 U. S. C. 601 et seq.)

describing the potential impact of the rule on small entities such as small businesses and small governmental jurisdictions. The purpose of the Regulatory Flexibility Act is to ensure that regulations do not impose unnecessary costs or other burdens on such entities. The EPA concluded that although the rule will have a significant impact on a number of small entities, it should not impose unnecessary costs or other burdens on such entities. A more detailed discussion of this study can be found in Exhibit 2.

The EPA divided businesses potentially affected by the rule into three categories: firms engaged in retail motor fuel marketing such as gasoline service stations, firms engaged in other businesses (general industry category), and local government entities. The EPA focused the emphasis of its analysis on the retail motor fuel marketing sector because 1) with few exceptions, firms in this sector must store the product in USTs because of public health and safety concerns from above ground fuel storage at such facilities; 2) about three-quarters of all retail motor fuel outlets are owned or operated by small businesses; and 3) the data base for this sector is reasonably accurate and captures the most severe small business impacts likely to occur as a result of the rule.

For the EPA analysis, small businesses in the retail motor fuel marketing segment are defined as firms with less than $4.6 million in annual sales and include all firms with only one or two outlets. Firms with $4.6 million in sales will typically have approximately $500,000 in assets and a net worth of about $250,000. The EPA estimates that in 1984, small businesses either owned or operated 72 percent of the 193,000 retail motor fuel outlets in the United States. To examine the potential economic impact of 40 CFR Part 280 on small businesses, the EPA estimated the rates at which existing firms in the retail motor fuel marketing sector would leave the industry with and without

regulations. The EPA estimated that these outlets have historically tended to exit the industry at a rate of 3 to 4 percent per year. The EPA concluded that if releases occur at the level estimated by previous analysis (see Statement of Need) and no revenue increases are possible for small businesses, this rate would increase to 6.2 percent per year, assuming "average" corrective action costs.

Local government entities of all sizes own USTs. In 1982, the typical municipality with a population less than 50,000 had general revenues of $1.7 million. The cost of replacing a single UST represents about 2 percent of the revenue of such a municipality, a significant expenditure that would have to be taken into account when planning. On the other hand, corrective action requiring cleanup of a dispersed plume could represent as much as 13 percent of the general revenues of such a community according to the EPA. In Minnesota, the Petroleum Tank Release Compensation Account (Petrofund) has been an important incentive in encouraging small businesses and local governmental units to report releases promptly and conduct corrective action for which they can be reimbursed.

At the state level during late 1989, an Interagency Study Group comprised of members from eight state agencies was assembled to address the issue of the impact of the UST regulations on small businesses. The report of this group (December 1989) identified several programs in place to assist retail petroleum marketers which are available from state government agencies (refer to Exhibit 3). In addition to the Petrofund, a new program of the State Fire Marshal Division to allow dispensing of petroleum products from aboveground storage tanks was identified. Also, the Department of Trade and Economic Development has a program to provide financial assistance to a limited number of small business operators desiring to expand their businesses.

Other observations of the study group include the following comments. Most of the retail petroleum marketing industry in greater Minnesota has already been affected by the EPA technical and financial responsibility requirements for USTs. Some businesses have closed or will close or stop selling gasoline. Some have incurred or will incur substantial equipment and cleanup costs. Others have found or will find expanded sales opportunities. The five- and ten-year EPA compliance schedules for leak detection and corrosion protection systems have been effectively compressed by the realities of the insurance market. Insurance companies have not been able to offer reasonably priced coverage for storage tanks in unknown condition. Usually, to obtain insurance coverage, businesses must be in compliance with the technical requirements. To a large extent, the Petrofund is now replacing pollution liability insurance coverage for small UST owners. (This should be even more evident as a result of the 1990 Minnesota State Legislature's action to bring the Petrofund in line with the limits of coverage in the federal financial responsibility requirements.)

In summary, the implementation of 40 CFR Part 280 in Minnesota to date has not had a more severe impact on small businesses here compared to other areas with similar economies or demographics. The Petrofund has been a major incentive for small businesses to report UST releases and take corrective action. Money otherwise spent on cleanups can be reimbursed and applied to the costs of upgrading to meet the UST technical standards. While the costs of implementation of the UST technical and corrective action standards will be significant and may be a temporary financial hardship for some small businesses, they will be more than offset over the ten-year implementation period in terms of protection of public health, safety, and the environment.

VI. CONSIDERATIONS OF ECONOMIC FACTORS

In exercising its powers, the MPCA is required by Minn. Stat. § 116.07, subd. 6 (1990) to give consideration to economic factors. The statute provides:

> In exercising all its powers the pollution control agency shall give due consideration to the establishment, maintenance, operation and expansion of business, commerce, trade, industry, traffic, and other economic factors and other material matters affecting the feasibility and practicability of any proposed action, including, but not limited to, the burden on a municipality of any tax which may result therefrom, and shall take of provide for such action as may be reasonable, feasible, and practical under the circumstances.

In proposing technical standards for UST owners and operators, the MPCA has given due consideration to available information as to any economic impacts the proposed rules would have. In development of 40 CFR Part 280, the EPA conducted an economic impact analysis for the general industry and marketing sectors having petroleum USTs and for firms having hazardous materials USTs (refer to Exhibit 2). The results of this analysis indicated that firms in the retail motor fuel marketing sector would be most adversely affected, for several reasons: they have a greater number of small firms that are more vulnerable to significant regulatory expenditures; regulatory expenditures in this sector are likely to be greater because motor fuel retail outlets generally have the greatest number of USTs per outlet; and firms in the retail motor fuel marketing sector do not, for the most part, have the option of closing their USTs and using alternative storage methods. The EPA's economic impact analysis reaches the following conclusions:

1. By ten years after the effective date of the EPA rule (December 22, 1998), 36 percent more small firms are projected to close under the final rule than in the base case (in the absence of further federal regulation).

2. Most economic impacts of the final rule occur in the first five years after its imposition.

3. Most closures of existing outlets are caused by corrective action expenses.

4. Were corrective actions to be performed in the base case as well as under the final rule, the EPA predicts that a higher percentage of outlets would survive under the final rule than in the base case.

No significant adverse economic impacts are anticipated to result from the adoption of 40 CFR Part 280 at the state level beyond those which may have already occurred nationally. There have been beneficial economic impacts from the implementation of 40 CFR Part 280 nationally and these should continue in Minnesota as well. UST manufacturers, monitoring equipment companies, tank testers, petroleum maintenance companies, UST installers, repairers and removers, and cleanup contractors have all benefited from the passage of the federal law in Minnesota. By increasing the technical expertise and environmental awareness of tank service people and UST owner/operators, there should be fewer releases to the environment in the future, resulting in economic benefits to public health, safety and the environment. While the short-term impact of the rule on some small businesses may be significant, the rule should result in long-term cost savings to municipalities, small businesses and the general public as a whole.

VII. CONCLUSION

Based on the foregoing, the Minn. Rules pts. 7150.0010 to 7150.0500 are both needed and reasonable.

VIII. LIST OF EXHIBITS

The agency is relying on the following documents to support these proposed rules:

Agency Ex. No.	Title
1	Federal Register, Vol. 52, No. 74, Pages 12662-12769, April 17, 1987.
2	Federal Register, Vol. 53, No. 185, Pages 37082-37194, September 23, 1988.
3	Interagency Study Group Report, Underground Storage Tank Issues, Report to Commissioner Perpich, Department of Public Safety, December 1989.

Dated: January 10, 1991

Barbara Lindsay Sims

Commissioner

State of Minnesota
Pollution Control Agency

In the Matter of the Proposed Permanent Rules Relating to Technical Standards for Underground Storage Tanks

NOTICE OF INTENT TO ADOPT RULES WITHOUT A PUBLIC HEARING

(1) Notice is hereby given that the Minnesota Pollution Control Agency (MPCA) intends to adopt the above-entitled rules without a public hearing following the procedures set forth in the Administrative Procedures Act for adopting rules without a public hearing in Minn. Stat. §§ 14.22 to 14.28 (1990). The MPCA's authority to adopt the rule is set forth in Minn. Stat. § 116.49 (1990).

This is the second notice provided by the MPCA regarding the proposed adoption of these rules. The first notice was published in the State Register on July 30, 1990, (15 S. R. 264). The MPCA has issued an Order Withdrawing the Proposed Rules Relating to Technical Standards and Corrective Action Requirements for Underground Storage Tanks, Minn. Rules pts. 7150.0010 through 7150.0700 as originally noticed. The MPCA is renoticing Minn. Rules pts. 7150.0010 through 7150.0350 and pts. 7150.0600 through 7150.0700 as originally noticed as Proposed Rules Relating to Technical Standards for Underground Storage Tanks, Minn. Rules pts. 7150.0010 through 7150.0500. Copies of last July's notice can be obtained from county libraries or from the Minnesota Bookstore (612/297-3000).

As a result of comments received during the first notice period, the MPCA has met with representatives of the affected parties and several issues relating to the technical standards portion of the rule as originally noticed were resolved and have been incorporated as minor changes to the proposed rule as published. The MPCA believes that, although amended corrective action criteria

could probably be added to the proposed rules as originally noticed, additional time will be required to develop the necessary language. In addition, the modifications could be construed as a substantial change, and adoption of the technical standards could be significantly delayed. Corrective action rules will be proposed at a later time.

All persons have until 4:30 p.m. on March 21, 1991, to submit comments in support of or in opposition to the proposed rules or any part or subpart of the rules. Comment is encouraged. Each comment should identify the portion of the proposed rules addressed, the reason for the comment, and any change proposed.

Any person may make a written request for a public hearing on the rules within the comment period. If 25 or more persons submit a written request for a public hearing within the comment period, a public hearing will be held unless a sufficient number withdraw their requests in writing. Any person requesting a public hearing must state his or her name and address, and is encouraged to identify the portion of the proposed rules addressed, the reason for the request and any change proposed. If a public hearing is required, the MPCA will proceed pursuant to Minn. Stat. §§ 14.131 through 14.20 (1990).

(6) Comments or written requests for a public hearing must be submitted to:

Thomas P. Clark
Minnesota Pollution Control Agency
Tanks and Spills Section
Hazardous Waste Division
520 Lafayette Road North
St. Paul, Minnesota 55155
612/643-3409

(8) The proposed rules may be modified if the modifications are supported by data and views submitted to the MPCA and do not result in a substantial change in the proposed rules as noticed.

(11) The proposed rules, if adopted, will establish technical standards and safeguards necessary to protect human health, safety and the environment and include the following areas: 1) design, construction, installation and notification of underground storage tank systems; 2) general operating requirements; 3) release detection requirements; and 4) closure of underground storage tank systems. Regulated substances include petroleum products as well as certain hazardous materials. One free copy of the rules is available upon request from Tom Clark at the address and telephone number stated above.

(12) A Statement of Need and Reasonableness that describes the need for and reasonableness of each provision of the proposed rules and identifies the data and information relied upon to support the proposed rules has been prepared and is available at the above address.

(13) You are hereby advised, pursuant to Minn. Stat. § 13.115 (1990), "Small Business Considerations in Rulemaking," that the proposed rules will have a minimal effect on small businesses. In drafting the proposed rules, the MPCA considered the potential impact on small businesses. A discussion of these considerations can be found in the Statement of Need and Reasonableness.

(9) If no hearing is required, upon adoption of the rules, the rules and the required supporting documents will be submitted to the Attorney General for review as to legality and form to the extent form relates to legality. Any person may request notification of the date of submission to the Attorney General. Persons who wish to be advised of the submission of this material to the Attorney General, or who wish to receive a copy of the rule as adopted, must submit a written request to Tom Clark of the Tanks and Spills Section at the above address.

Charles W. Williams
Commissioner

STATE REGISTER

Department of Administration

Print Communications Division
(Editorial Office: 504 Rice Street) Editor (612) 296-4273
Billing/Circulation Manager (612) 296-0931
117 University Avenue, St. Paul, Minnesota 55155

STATE REGISTER PRINTING ORDER

INSTRUCTIONS:

1. Submit TWO COPIES of everything to be published, typed double spaced, with one-inch margins all around.
2. Use typewriter only, so that all cabron copies are legible.
3. Use a separate form for each sequence number used.
4. **Do not** write in shaded areas. Complete all other applicable areas, including the department/division number and the sequence number.
5. Your agency's STATE REGISTER **Liaison Officer** must sign this form.
6. Retain the last copy for your records.
7. Check the inside front cover of the STATE REGISTER for submission deadlines.

CHECK ALL THAT APPLY:

Desired date/s of publication February 19, 1991

☐ Request for publication in the STATE REGISTER

☐ Request for publication in the STATE REGISTER Contract Supplement

☐ Request for publication in BOTH listed above.

☐ Request for overrun (must be made prior to printing)

Date of issue ___ / ___ / ___ Number of copies ___

☒ Request for single copies Date of issue 02 / 19 /91 Number of copies 1

☐ Request for other publications: ___

SHIP TO:

Name	Thomas P. Clark Minnesota Pollution Control Agency
Department/Division	Tanks and Spills Section Hazardous Waste Division
Address	520 Lafayette Road
City/State/Zip	St. Paul, Minnesota 55155
Telephone	612/643-3409

NA68	INVOICE NO.	DEPT./DIV. NO.	SEQ. NO.	SUFF	FY	OBJ	AMOUNT	CC1	CC2	CC3
	STR09929	32400	25801	01	1	142	1586.90		102	

CC4	CC5	OCC DATE	REC INDEX ITEM FUND	REC CLASS	REC CC5
Aid #830588		021991	160991384	348	

DEPARTMENT	DIVISION	BILLING ADDRESS
MPCA	Hazardous Waste Tanks and Spills Section	520 Lafayette Road 5 St. Paul, Minnesota 55155

DEPARTMENT AUTHORIZED SIGNATURE - LIAISON OFFICER — PHONE — DATE: Barbara Lindsey Sims 1-28-91

TRANSACTION NUMBER (FOR NA68 ONLY): 022771-06474

DESCRIPTION (FOR SUBMITTING AGENCY'S USE)
Notice of proposed permanent rules relating to technical standards for underground storage tanks, Minn. Rules ch. 7150

DESCRIPTION

	PRICE
20.3 P. of copy in State Register Vol. 15, Number 34, Feb. 19, 1991 $78.00/page	1583.40
1 copy of overrun of State Register Vol. 15, Number 34, Feb. 19, 1991 $ 3.50/copy=	3.50
TOTAL	1586.90

SR-00001-05 (4/89)

DUPLICATE — FOR FINANCE DEPARTMENT

STATE REGISTER

Department of Administration

Print Communications Division
(Editorial Office: 504 Rice Street) Editor (612) 296-4273
Billing/Circulation Manager (612) 296-0931
117 University Avenue, St. Paul, Minnesota 55155

STATE REGISTER PRINTING ORDER

INSTRUCTIONS:

1. Submit TWO COPIES of everything to be published, typed double spaced, with one-inch margins all around.
2. Use typewriter only, so that all cabron copies are legible.
3. Use a separate form for each sequence number used.
4. **Do not** write in shaded areas. Complete all other applicable areas, including the department/division number and the sequence number.
5. Your agency's STATE REGISTER **Liaison Officer** must sign this form.
6. Retain the last copy for your records.
7. Check the inside front cover of the STATE REGISTER for submission deadlines.

CHECK ALL THAT APPLY:

Desired date/s of publication February 19, 1991

☐ Request for publication in the STATE REGISTER

☐ Request for publication in the STATE REGISTER Contract Supplement

☐ Request for publication in BOTH listed above.

☐ Request for overrun (must be made prior to printing)

Date of issue ___/___/___ Number of copies ___

☒ Request for single copies Date of issue 02/19/91 Number of copies 1

☐ Request for other publications: ___

SHIP TO:

Name	Thomas P. Clark
	Minnesota Pollution Control Agency
Department/Division	Tanks and Spills Section
	Hazardous Waste Division
Address	520 Lafayette Road
City/State/Zip	St. Paul, Minnesota 55155
Telephone	612/643-3409

NA68	INVOICE NO.	DEPT./DIV. NO.	SEQ. NO.	SUFF	FY	OBJ	AMOUNT	CC1	CC2	CC3
	STR09930	32400	25801	01	1	142	34.70		102	

CC4	CC5	OCC DATE	REC INDEX ITEM FUND	REC CLASS	REC CC5
Aid #830588		021991	160991384	348	

DEPARTMENT	DIVISION	BILLING ADDRESS
MPCA	Hazardous Waste Tanks and Spills	520 Lafayette Road St. Paul, Minnesota 55155

DEPARTMENT AUTHORIZED SIGNATURE - LIAISON OFFICER — PHONE — DATE

PAS Barbara Lindsey Sime 1-28-91

TRANSACTION NUMBER (FOR NA68 ONLY) 022791-06539

DESCRIPTION (FOR SUBMITTING AGENCY'S USE)

Notice of order withdrawing proposed permanent rules relating to technical standards and corrective action requirements for underground storage tanks, Minn. Rules ch. 7150.

DESCRIPTION	PRICE
.4 P. of copy in STate Register Vol. 15, Number 34, Feb. 19, 1991 $78.00/page=	31.20
1 copy of overrun of State Register Vol. 15, Number 34, Feb. 19, 1991 $ 3.50/copy=	3.50
TOTAL	34.70

SR-00001-05 (4/89)

DUPLICATE — FOR FINANCE DEPARTMENT AFTER

CERTIFICATE OF AGENCY'S AUTHORIZING RESOLUTION

I, Charles W. Williams, do hereby certify that I am the Commissioner of the Minnesota Pollution Control Agency, an agency duly authorized under the laws of the state of Minnesota, and that the following is a true, complete, and correct copy of the resolution adopted at a meeting of the Minnesota Pollution Control Agency duly and properly called and held on the 21st day of May, 1991, that a quorum was present at said meeting, that a majority of those present voted for the resolution and that said resolution will be set forth in the minutes of said meeting and has not been rescinded or modified:

BE IT RESOLVED, that the Minnesota Pollution Control Agency hereby approves and adopts the attached rules governing technical standards for underground storage tanks, Minn. Rules Ch. 7150, pursuant to the authority vested in the Minnesota Pollution Control Agency by Minn. Stat. § 116.49 (1990) and Minn. Stat. § 115.03, subd. 1(e) (1990).

BE IT FURTHER RESOLVED, that prior to publishing the rules as adopted in the State Register, the Commissioner is authorized to make any form changes to the rules that the Revisor of Statutes requires the Minnesota Pollution Control Agency to make in order to obtain the Revisor's certification as required by Minn. Stat. §§ 14.07, subd. 2 (1990) and 14.28 (1990).

BE IT FURTHER RESOLVED, that the Minnesota Pollution Control Agency adopts the Findings of Fact, Conclusions, and Order Adopting Rules and that the Commissioner is hereby authorized to sign the above-mentioned document on behalf of the Minnesota Pollution Control Agency and to perform the necessary acts to provide that the rule shall have the force and effect of law.

IN WITNESS WHEREOF, I hereunto subscribed my name this 22nd day of May, 1991.

Charles W. Williams
Commissioner

State Board of Investment

Notice of Meeting

The State Board of Investment will meet on Wednesday, December 7, 1988 at 8:30 a.m. in Room 15, State Capitol, Saint Paul, MN.

The Investment Advisory Council will meet on Tuesday, December 6, 1988 at 2:00 p.m. in Conference Room "A", MEA Building, 41 Sherburne Avenue, Saint Paul, MN.

Office of the Ombudsman for Mental Health and Mental Retardation

Notice of Meeting

The Ombudsman for Mental Health and Mental Retardation Advisory Committee will conduct a general meeting at 9:00 a.m. on Friday, December 9, 1988. The meeting will be held at the Capitol Holiday Inn, Sibley Room A & B, second floor.

Minnesota Pollution Control

Division of Air Quality

Notice of Intent to Solicit Outside Information Regarding Proposed Rule Governing Emission Testing of Motor Vehicles in Metropolitan Area

NOTICE IS HEREBY GIVEN that the Minnesota Pollution Control Agency (Agency) is seeking information or opinions from outside sources in preparing to propose the adoption of rules governing emission testing of vehicles registered in the metropolitan area. The adoption of the rule is authorized by *1988 Minnesota Laws* Ch. 661 (to be codified as *Minnesota Statutes* §§ 116.60-.65), which requires the Agency to annually inspect motor vehicle emission control equipment and conduct emission testing on vehicles registered in the metropolitan area.

The Agency requests information and opinions concerning the subject matter of the rule. Interested persons or groups may submit data or views in writing or orally. Written or oral statements or comments should be directed to:

Barbara Jackson
Minnesota Pollution Control Agency
520 Lafayette Road North
St. Paul, Minnesota 55155
Telephone: (612) 296-7212

Oral statements will be received during regular business hours, 8:00 a.m. to 4:30 p.m., Monday through Friday.

All statements of information and opinion will accepted until January 20, 1989. Any written materials received by the Agency shall become part of the rulemaking record in the event that the rule is adopted.

Gerald L. Willet
Commissioner

Minnesota Pollution Control Agency

Hazardous Waste Division
Tanks and Spills Section

Outside Opinion Sought Regarding Development of Rules for Underground Storage Tank Management

NOTICE IS HEREBY GIVEN that the Minnesota Pollution Control Agency (MPCA) is seeking information or opinions from sources outside the MPCA for the purpose of adopting rules applicable to owners and operators of underground storage tanks (UST) in the state. The MPCA intends to base the rule on technical standards and corrective action requirements for USTs published by the U.S. Environmental Protection Agency as Part 280 of Title 40 of the *Code of Federal Regulations* in the *Federal Register*, September 23, 1988. Authorization for MPCA to adopt UST rules is provided by *Minnesota Statutes* §§ 116.49 (1986).

The federal law establishes safeguards necessary to protect human health and the environment and includes the following areas; 1) design, construction, installation and notification of UST systems; 2) general operating requirements; 3) release detection requirements; 4) release reporting, investigation and confirmation; and 5) closure of UST systems. Regulated substances include petroleum products as well as certain hazardous materials.

The MPCA invites all interested persons or groups to submit information or comments on these subjects to Thomas P. Clark, MPCA, Hazardous Waste Division, Tanks and Spills Section, 520 Lafayette Road North, St. Paul, Minnesota 55155 (612/296-7335).

Any written material received by the MPCA by January 6, 1989, shall become part of the background record regarding these rules.

Gerald L. Willet
Commissioner

Department of Public Service

Energy Division

Notice of Solicitation of Outside Information or Opinions Regarding Proposed Rule Governing Residential Thermal Insulation Standards

NOTICE IS HEREBY GIVEN that the State Department of Public Service is seeking information or opinions from sources outside the agency in preparing to propose the amendment of the rule governing Residential Thermal Insulation Standards. The adoption of the rule is authorized by *Minnesota Statutes*, section 325F.20 subdivision 1 and 325F.21 subdivisions 1 & 2, which requires the agency to establish standards for the product quality, safety, installation, and labeling of thermal insulation products, and to establish test programs and procedures to ensure that standards established by this chapter are met.

The State Department of Public Service requests information and opinions concerning the subject matter of the rule, including: requirements for quality assurance programs generally, quality assurance for insulations whose manufacturing process is completed on-site, test standards for radient barrier insulation, and test standards and application requirements for insulation intended for exterior foundation wall insulation. Interested persons or groups may submit data or views on the subject matter of concern in writing or orally. Written statements should be addressed to:

Bruce Nelson, Department of Public Service, Energy Division
900 American Center Building, 150 East Kellogg Boulevard
St. Paul, Minnesota 55101, (612) 297-2313.

Oral statements will be received during regular business over the telephone and in person at the above address.

All statements of information and opinions shall be accepted until January 2, 1989. Any written material received by the State Department of Public Service shall become part of the rulemaking record to be submitted to the attorney general or administrative law judge in the event that the rule is adopted.

Dated: 16 November 1988

Tony Perpich
Commissioner

Office of the Secretary of State

Notice of Vacancies in Multi-Member State Agencies

NOTICE IS HEREBY GIVEN to the public that vacancies have occurred in multi-member state agencies, pursuant to *Minnesota Statutes* 15.0597, subdivision 4. The following vacancies include scheduled vacancies occurring in December and unscheduled vacancies. Vacancies scheduled to occur in January are indicated in the Annual Compilation of State Agencies, also published in this issue of the *State Register*. Application forms may be obtained and submitted to the Office of the Secretary of State, Open Appointments, 180 State Office Building, St. Paul, MN 55155-1299; (612) 296-2805. Requests for applications may also be made in person at Room 174, State Office Building. The application deadline is December 20, 1988.

TELECOMMUNICATION ACCESS FOR COMMUNICATION-IMPAIRED PERSONS BOARD

1 member—must be a representative of Deafness Education and Advocacy Foundation (D.E.A.F), Inc., the organization chosen by TACIP to establish and operate the state-wide message relay service.

SPEC-DATA®

This Spec-Data sheet conforms to editorial style prescribed by The Construction Specifications Institute. The manufacturer is responsible for technical accuracy.

1. PRODUCT NAME

sti-P_3® Protected Underground Steel Storage Tanks

2. MANUFACTURER

Licensed Manufacturers of sti-P_3® Protected Underground Storage Tanks are represented by:

STEEL TANK INSTITUTE (STI)
728 Anthony Trail
Northbrook, Illinois 60062
Phone: (312) 498-1980

3. PRODUCT DESCRIPTION

sti-P_3® cathodically-protected underground steel storage tanks are normally fabricated in conformance with the latest edition of Underwriters' Laboratories, Inc., Standard for Safety UL 58 (Steel Underground Tanks for Flammable and Combustible Liquids). All non-pressure applications are in strict conformance with sti-P_3® specifications. sti-P_3® tanks are installed wherever fuels, chemicals or other liquids are stored, such as gasoline service stations, airports, truck terminals, industrial plants and large commercial buildings.

sti-P_3® tanks are totally compatible with all known and anticipated liquid fuels, including methanol and ethanol-blend gasolines, as well as a vast array of chemicals.

This is a partial list of products that have been, or can be stored in steel storage tanks. Certain temperature, gage pressure and solution restrictions may apply. For example, Methanol maximums are 150 psig and 555°F. Consult your local tank manufacturer for information about your special storage requirements.

If the material to be stored in the tank is corrosive to carbon steel, an appropriate interior lining compatible with that material should be specified. Check with the manufacturer for recommendations.

Underground storage of these products has the operating advantages of reducing vapor losses by keeping temperature variations to a minimum and is less hazardous than aboveground storage.

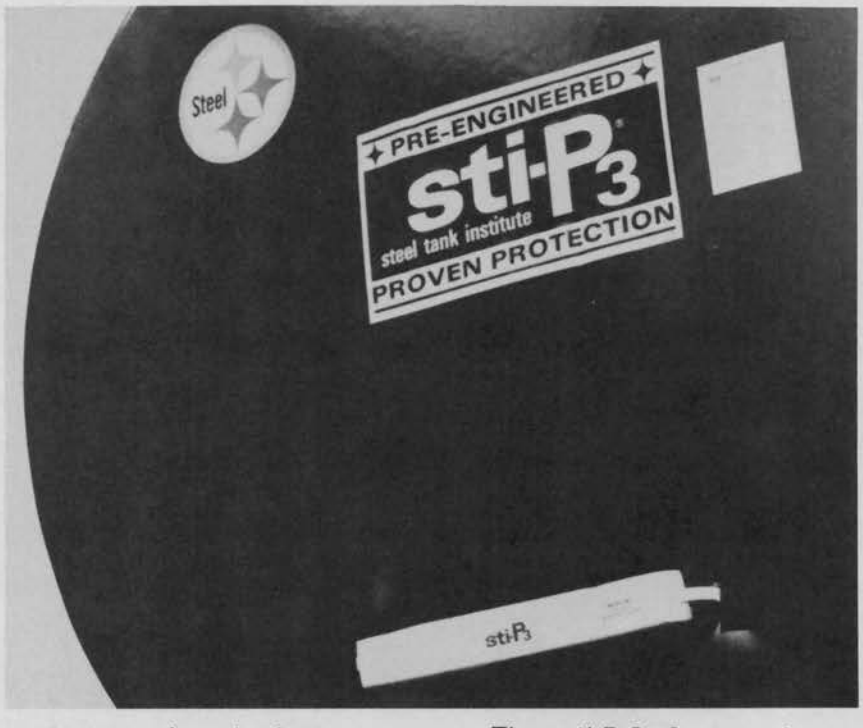

Protected underground steel storage tanks with sti-P_3® corrosion protection offers a 30 Year Limited Warranty and are available in various capacities and dimensions: standard sizes range from 300 to 50,000 gallons. Other sizes can be custom fabricated (See Tables.)

The sti-P_3® System is pre-engineered. All tanks are fabricated and completely fitted at the manufacturer's plant. Combined in the sti-P_3® System are the three most widely accepted and established procedures for exterior corrosion protection: Heavy duty protective dielectric coating, Cathodic protection, and Electrical isolation.

Tanks are manufactured under the trademark sti-P_3® and are pre-engineered for protection against

Products Stored

Acetone	Chloroform	Magnesium sulfate	Sodium cynide
Acetylene	Compressed air	Maltose	Sodium formate
Alcohol	Diesel fuel	Methanol	Sodium metasilicate
Anhydrous ammonia	Ethanol	Methyl ethyl ketone	Sodium polysulfide solution
Aqueous ammonia	Ethyl amine	Methyl isobutyl ketone	Sodium silicates
Benzene	Fuel oil	Monoethanolamine	Sorbitol
Brine	Gas	Natural gas	Sulfuric acid-100
Butanol	Gasohol	Nitrogen	Tannic acid
Butyl alcohol	Gasoline	Phenol	Triethanolamine
Carbon dioxide	Hydrogen	Propylnol	Toluene
Carbon tetrachloride	Jet fuel	Pyridine	Water
Caustic	Kerosene	Sodium acetate	Xylene

The ten-point Spec-Data® format has been reproduced from publications copyrighted by CSI, 1964, 1965, 1966, 1967, and used by permission of The Construction Specifications Institute, Inc., Alexandria, VA 22314.

Steel Tank Institute
May 1987
(Supersedes August 1986)
13 LIQUID AND GAS STORAGE TANKS
Underground Corrosion Protected Steel

Optional Accessories

Compartment Bulk Heads	Horizontal Coils
Corrosion-resistant Linings	Interior Corrosion Prevention
Dished Heads	Interior Ladders
Fill Tubes	Internal Piping
Flanged Nozzles	Manhole Extension Tubes
Heating Coils	Manholes
Hold Down Anchors	Masonry Supports
Hold Down Straps	

exterior corrosion.

Federal Law (P.L.) 98-616 mandates that all new underground storage tanks must be:

1) Structurally Sound
2) Product Compatible
3) Corrosion Resistant in Corrosive Soil

STI requires that all tanks are shipped with a means for monitoring cathodic protection, both Protection Prover 1® and PP2® are acceptable.

Factory testing

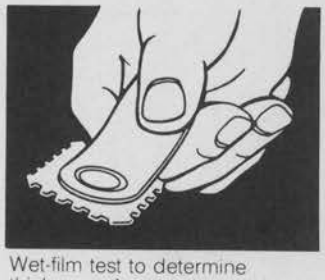

Wet-film test to determine thickness of protective-coating.



Dry-film thickness test for additional quality control check of protective-coating application.

The following chart is provided as a reference. The respective manufacturing techniques, methods and customer requirements will result in slight variances from this table.

Typical underground steel fuel storage tanks[1]

Gallons Capacity	Steel Nominal Thickness	Sample Dimensions[2]	Standard Openings*	Nominal Weight (Lbs)
550	.105″ (12 gage)	48″x6′	4-4″	482
1000	.135″ } (10 gage)	48″x10′8″	4-4″	1,000
1000	.135″ }	64″x6′1″	4-4″	916
2000	.179″ }	64″x12′	6-4″	1,980
3000	.179″ } (7 gage)	64″x18′	6-4″	2,750
4000	.179″ }	64″x24′	6-4″	3,500
5000	¼″	96″x13′4″	6-4″	4,910
6000	¼″	96″x16′	6-4″	5,590
8000	¼	96″x21′4″	6-4″	6,905
10000	¼	96″x26′8″	6-4″	8,280
12000	¼	96″x32′	6-4″	9,650
15000	5⁄16	126″x23′4″	6-4″	12,800
20000	5⁄16	126″x31′	6-4″	15,970
30000	⅜″	144″x36′	6-4″	25,000
50000	⅜″	144″x60′	6-4″	40,000

*Larger sizes available.

(1) One advantage of the sti-P$_3$® corrosion control system is that it can be applied to any size steel tank. If non-standard size tanks are required, they also can be protected from corrosion.**

(2) Check with manufacturers for other available dimensions, before specifying.

**Tanks above are industry standard. Many other tank and opening sizes, orientations and dimensions are available.

4. TECHNICAL DATA

The sti-P$_3$® trademarked name for these specially fabricated protected underground steel storage tanks is derived from the three forms of corrosion prevention procedures used to protect the tanks.

Electrical Isolation: Dielectric nylon reducing bushings or flange isolators are used in each tank opening in order to isolate the tank from connecting steel pipes. This prevents stray currents from entering the tank through the piping system, and eliminates unnecessary anode current drain.

Electrically Insulating Exterior Protective Coating: Special coating significantly reduces the tanks exposure to corrosion. It also reduces the amount of protective current needed for cathodic protection. Every new coating application must be tested in accordance with sti-P$_3$® requirements prior to its acceptance with sti-P$_3$® specifications. Every coating application requires quality control inspection such as dry film thickness readings. The coating is applied over the steel surface after commercial blast cleaning, per Steel Structures Painting Council Surface Preparation Specification SSPC-SP-6-63 Number 6.

Cathodic Protection: Galvanic anodes of magnesium or zinc are attached to each tank to reverse the current flow. These anodes sacrifice themselves to further protect the tank from corrosion. Due to the electrical potential between the anodes and the steel tank, they are self-starting upon burial of the tank, and need no other equipment or connections. The number and size of anodes is directly proportional to the surface area of the tank.

2500 to 25,000 gallon underground tanks

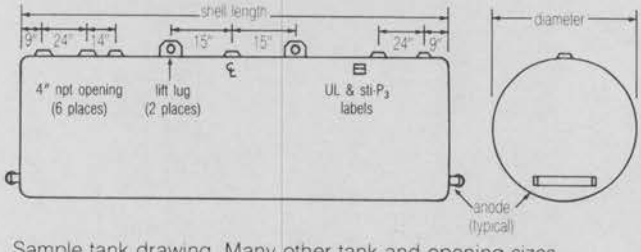

Sample tank drawing. Many other tank and opening sizes, orientation and dimensions are available on special order.

5. INSTALLATION

1. The excavation shall be free from material that may cause damage to the tank coating. (Care shall be taken during installation that foreign matter is not introduced into the excavation or backfill.)

2. The bottom of the excavation shall be covered with clean sand or gravel to a depth of one foot, suitably graded and leveled.

3. The excavation shall extend a distance of at least one foot around the perimeter of the tank.

4. An air test of the tank above ground is recommended. Pressure should not exceed 5 pounds per square inch (PSIG) while a soap solution is applied to weld seams. NOTE: Dual wall tank air testing will differ. Consult tank fabricator for air test recommendations.

5. Before placing the tank in the excavation, all dirt clods and similar foreign matter shall be cleaned from the tanks, and areas of coating damage shall be repaired with a touch up coating provided.

5.1 When so shipped, remove protective plastic covering from weld-on zinc anodes to assure proper anode operation. Verify anode integrity prior to backfill.

6. Equipment to lift the tank shall be of adequate size to lift and lower the tank without dragging and dropping to ensure no damage to the tank or the coating.

7. Tanks shall be carefully lifted and lowered by use of cables or chains of adequate length (not less than 45° included angle) attached to the lifting lugs provided. A spreader bar should be used where necessary. **Under no circumstances use chains or slings around the tank shell.**

7.1 **sti-P$_3$®** tanks may be equipped with either zinc or magnesium anodes. Zinc anodes are effective in all soil resistivities. Magnesium anodes are designed for soil resistivities 2000 ohm-cm or greater.

7.2 After an **sti-P$_3$®** tank has been placed in the excavation, if anode is connected by a lead wire, attachment to the tank shall be checked to assure this connection has not been damaged. Where damaged, the connection must be reestablished in strict accordance with **sti-P$_3$®** specifications.

8. Where anchoring by means of a concrete slab is required, the tank must **not** be placed directly on the pad. A layer of fine or pea gravel, sand or No. 8 crushed stone (No. 8 coarse aggregate ASTM-448) at least 6 inches deep must be spread evenly over the dimensions of the pad to separate the tank from the pad.

The tank shall not be placed on any other hard or sharp material that can cause deformation of the tank or damage to the coating.

8.1 If installation area is in a tidal area, the tank "bedding" material should be fine gravel or pea gravel, rather than sand.

9. Special care should be exercised when installing hold down straps to ensure that the straps are separated from the tanks by separating pad made of an inert insulating dielectric material. The separating pad should be a least 2 inches wider than hold down straps' width and must be carefully placed anywhere on the tank where hold down straps would come into direct contact with the tank shell.

10. Homogeneous backfill consisting of clean sand, gravel, or other non-corrosive inert materials shall be placed along bottom side of tank by hand shoveling and tamping to ensure that the tank is fully and evenly supported around bottom quadrant.

11. The plugs at unused openings shall be removed. Apply compatible, non-hardening pipe sealant to internal bushing threads. Permanent metal plugs shall be installed at all unused openings.

11.1 The di-electric bushings in **sti-P$_3$®** tanks shall not be removed from the unused openings. The plugs in tank openings which are to be used should not be overtightened as this may cause the bushing to unscrew with the plug. Care shall be taken not to cross-thread or damage the nonmetallic bushings when replacing plugs or installing required tank piping.

11.2 Prior to backfilling, all openings shall be visually

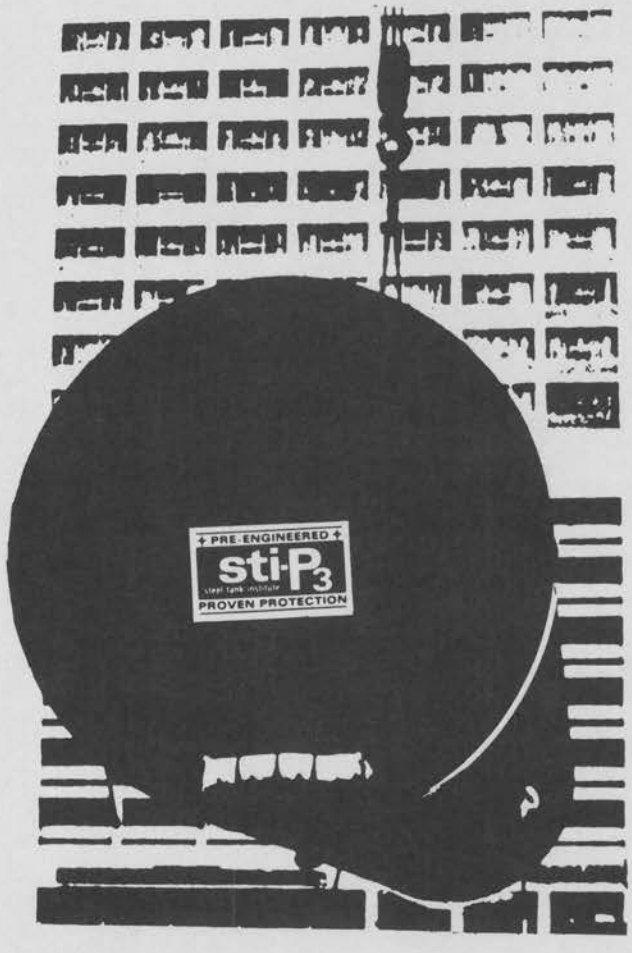

inspected to assure that the **sti-P_3®** dielectric nylon bushings remain in place. Where flanged openings have been used, the dielectric isolation shall be confirmed with a continuity tester. No current shall pass through the factory installed dielectric flanges. Dielectric isolation is required to assure tank integrity.

12. Where air or hydrostatic testing is required after installation, it is recommended that the pressure applied shall not be in excess of 5 pounds per square inch (PSIG) as measured at the top of the tank.

13. Prior to completion of the backfill, the **Protection Prover 2®** monitoring terminal located near the top of the tank must be positioned as follows:

13.1 Select a terminal location on a pipe near grade that will be accessible through a grade manhole upon completion of installation.

13.2 Loosen the black nylon pipe lashing by releasing the locking tab. Uncoil enough lead wire from the tank mounting lug to reach the terminal location with an additional 4 feet of slack.

13.3 Secure the **PP2®** terminal to the pipe by tightening the black nylon pipe lashing. The lead wire terminations shall remain sealed.

13.4 Route wire to avoid strain or breakage during backfill. Do not cover **PP2®** terminal with backfill material.

14. As an alternative, this tank may be equipped with a **Protection Prover 1®** monitoring system, which includes a monitoring test station mounted at the end of the tank. Prior to backfilling, extend the monitoring system to 4" below grade level without pulling it out of the mounting bracket. The **PP1®** test station shall be protected by a grade manhole of 7½" minimum diameter.

15. Contact between the steel tank and the following equipment can nullify the cathodic protection design: external or internal piping, pumps, valves, electrical gaging or monitoring equipment, and grounding systems. A simple continuity test between the **PP2®** lead wire and each connected system will verify the electrical isolation. Continuity should not be present.

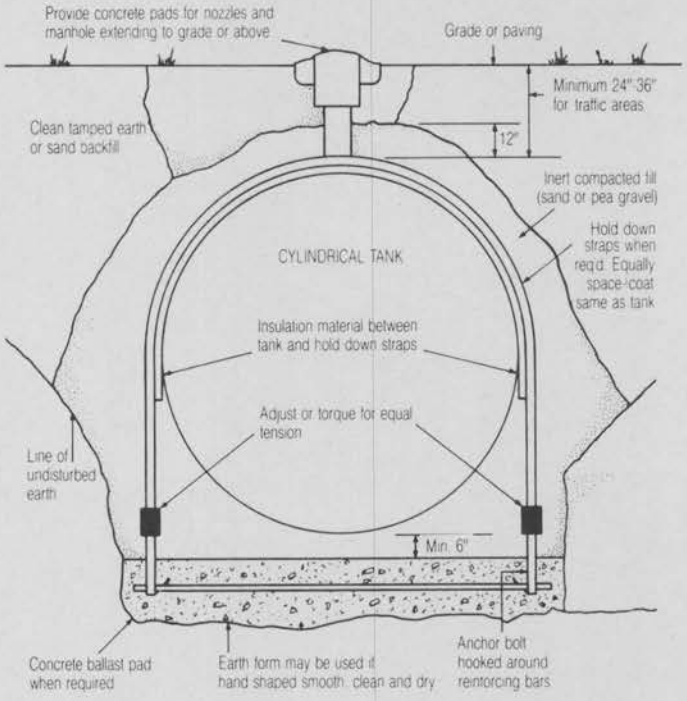

16. The backfill shall be deposited carefully around tank and to a depth of at least one foot over tank to avoid damage to coating especially were tamping is required. (See NFPA 30 and state or local codes for depth of cover required.)

17. All tanks must be monitored to assure proper cathodic protection of the tank. Monitoring shall be accomplished by taking structure to soil voltage readings within 1 year after installation, and then in 5 year intervals for the life of the installation. Follow applicable local, state, and federal regulations for additional tank monitoring requirements.

6. AVAILABILITY AND COST

sti-P_3® protected underground steel storage tanks are available nationally from 78 licensed manufacturing plants throughout the United States (See Licensee List).

Cost: Information on protected steel tank costs can be obtained directly from sti-P_3® licensed manufacturers. Installation costs should be obtained from tank installation contractors.

7. WARRANTY

These tanks are backed with a 30 Year Limited Warranty against leakage from corrosion. Stated obligations to both parties are defined and delivered with each tank, and its serial number registered on an individual basis with STI. A copy of the Warranty is available from STI.

To assure adherence to standards and sti-P_3® specifications, members of the Steel Tank Institute (STI) are inspected by independent quality control inspectors. As part of this program, inspectors make unannounced visits to all the plants producing sti-P_3® underground tanks to certify that fabricating and assembly procedures, as specified by Steel Tank Institute, are being followed in every detail. Quality fabrication and conformity to strict specifications are thus assured.

In addition, STI is actively involved with various codes, standards and committees such as NFPA 30 and 329, NACE, UFC, ICBO, BOCA, and API.

8. MAINTENANCE

No maintenance is required on protected underground steel storage tanks. Protection Prover 1® or as an alternate, Protection Prover 2® cathodic protection monitoring system is provided and factory installed on each tank.

9. TECHNICAL SERVICES

Engineering and installation assistance is provided by sti-P_3® licensed tank manufacturers.

As a guide to writing specifications, include: "Provide under-

ground tanks conforming to the Contract Drawings and Underwriters' Laboratories, Inc. Standard UL 58 (or other construction standards). The corrosion control system shall be in strict accordance with sti-P_3® specifications, and tank(s) shall bear sti-P_3® labels."

10. FILING SYSTEMS

SPEC-DATA® II

Sweet's Industrial Catalog code 15.8(d)/ST. Additional literature is available from the Steel Tank Institute.

sti-P_3® LICENSED UNDERGROUND TANK MANUFACTURERS

ALABAMA

Alabama Tank, Inc.
P.O. Box 760
Atmore, Alabama 36504
205/368-5946

Brown-Minneapolis Tank Company
P.O. Box 10785
Birmingham, Alabama 35202
205/841-0403

ARKANSAS

Hall Tank Company
P.O. Drawer 5787
North Little Rock, AR 72119
501/945-3211

Newberry Tanks, Inc.
205 N. Walker Street
West Memphis, AR 72301-3695
501/735-4473

CALIFORNIA

Ace Tank & Equipment
1409 Industrial Parkway West
Hayward, CA 94544
415/881-0837

Modern Welding Company, Inc.
4141 N. Brawley Avenue
Fresno, CA 93711
209/275-9353

N.J. McCutchen, Inc.
123 West Sonora Street
Stockton, CA 95203
209/466-9704

Perkins Welding Works, Inc.
P.O. Box 7317
Sacramento, CA 95826-1017
916/383-5413

Redding Tank & Casing
P.O. Box 816
Redding, CA 96099
916/241-4156

COLORADO

Eaton Metal Products Co.
P.O. Box 16405, Stockyards Station
Denver, CO 80216
303/296-4800

FLORIDA

Buffalo Tank Corp. of Delaware
P.O. Box 60309
Jacksonville, FL 32236
904/783-4210

Modern Welding Company, Inc.
P.O. Box 8678
Orlando, FL 32856
305/843-1270

Specialty Tank & Equipment Co.
P.O. Drawer 52056
Jacksonville, FL 32201
904/353-0108

GEORGIA

Metal Products Company
P.O. Box 8
Suwanee, GA 30174
404/945-8383

Modern Welding Company, Inc.
300 Prep Phillips Drive
Augusta, GA 30901
404/722-3411

ILLINOIS

Certified Equipment & Mfg. Co.
P.O. Box 298
Springfield, IL 62705
217/525-1433

Chicago Boiler Company
1965 N. Clybourn Avenue
Chicago, IL 60614
312/348-8250

Precision Tank & Equipment Co., Inc.
R.R. 1, P.O. Box D
Virginia, IL 62691
217/452-7228

INDIANA

Kennedy Tank & Mfg. Co., Inc.
P.O. Box 27070
Indianapolis, IN 46227
317/787-1311

Steel Tank & Fabricating Corp.
P.O. Box 210
Columbia City, IN 46725
219/248-8971

IOWA

B&H Tank Corporation
P.O. Box 160
Marion, IA 52302
319/377-6357

Modern Welding Company, Inc.
2818 Mt. Pleasant Road
Burlington, IA 52601
319/754-6577

KANSAS

Palmer Manufacturing & Tank
P.O. Box 1195
West Highway 50
Garden City, KS 67846
316/275-7461

KENTUCKY

Modern Welding Company, Inc
P.O. Box 1450
Owensboro, KY 42301
502/685-4400

Service Welding & Machine Co., Inc.
700 E. Main Street
Louisville, KY 40202
502/585-4295

Southern Tank & Mfg., Inc.
P.O. Box 2066
Owensboro, KY 42301
502/684-2321

MARYLAND

Buffalo Tank Corp. of Delaware
P.O. Box 2755
Baltimore, MD 21225
301/355-1300

MASSACHUSETTS

Buffalo Tank Corp. of Delaware
Higgins Street
Worcester, MA 01606
617/853-4827

Massachusetts Engineering Co., Inc.
40 Murphy Drive
Avon, MA 02322
617/580-0550

MICHIGAN

Brothers, Inc.
P.O. Box 188
Hermansville, MI 49847
906/498-7771

Buffalo Tank Corp. of Delaware
P.O. Box 126
Romulus, MI 48174
313/941-5474

Clawson Tank Company
P.O. Box 350
Clarkston, MI 48016
313/625-8700

Dowagiac Steel Tank Company, Inc.
60060 M-51 South
Dowagiac, MI 49047-9794
616/782-8626

Steel Tank & Fabricating Co., Inc.
P.O. Box 618
Mancelona, MI 49659
616/587-9191

MINNESOTA

Brown-Minneapolis Tank Co.
P.O. Box 64670
St. Paul, MN 55164
612/454-6750

Kleespie Tank & Petroleum Equipment
P.O. Box 106
Morris, MN 56267
612/589-2100

Wheeler Tank Manufacturing Co.
274 Atwater Street
St. Paul, MN 55117-5399
612/488-6655

MISSOURI

J.L. Houston Company
P.O. Box 255
Hopkins, Missouri 64461
816/778-3393

Mid-South Steel Products, Inc.
P.O. Box 277
Cape Girardeau, MO 63701
314/335-5529

We-Mac Manufacturing Co.
326 East 14th Ave.
North Kansas City, MO 64116
816/221-1850

MONTANA

Empire Steel Manufacturing Co., Inc.
P.O. Box 2565
Billings, MT 59103
406/252-0101

NEW YORK

Lancaster Tanks & Steel Products, Inc.
P.O. Box 8
Lancaster, NY 14086
716/683-2033

Mohawk Metal Products Co., Inc.
Main Street
Frankfort, NY 13340
315/894-9918

NORTH CAROLINA

Buffalo Tank Corp. of Delaware
P.O. Box 14094
Charlotte, NC 28206
704/598-8880

General Industries, Inc.
P.O. Box 1279
Goldsboro, NC 27530
919/735-2882

NORTH DAKOTA

Fargo Tank Company
P.O. Box 2044
Fargo, ND 58107
701/282-2345

O'Day Equipment, Inc.
P.O. Box 2706
Fargo, ND 58108
701/282-9260

OHIO

Hamilton Tanks
2200 Refugee Road
Columbus, OH 43207
614/445-8446

Modern Welding Company, Inc.
72 Waldo Street
Newark, OH 43055
614/344-9425

Stanwade Metal Products, Inc.
P.O. Box 23
Hartford, OH 44424
216/772-2421

OKLAHOMA

Smith Tank Company of Tulsa
P.O. Box 9189
Tulsa, OK 74157
918/446-4484

OREGON

Ace Tank & Equipment
P.O. Box 13441
Portland, OR 97218
503/284-5505

PENNSYLVANIA

Adamson Company, Inc.
P.O. Box 67
Quarryville, PA 17566
717/786-2117

Bristol Tank & Welding Co., Inc.
P.O. Box 505
Langhorne, PA 19047-0505
215/752-9556

Highland Tank & Mfg. Co.
P.O. Box 338, RD #3
Stoystown, PA 15563
814/893-5701

Highland Tank & Mfg. Co.
R.D. 4
Manheim, PA 17545
717/665-6877

Hilty Tank Corporation
P.O. Drawer 69
Carlisle, PA 17013
717/249-7364

George I. Reitz & Sons, Inc.
P.O. Box 98
Brookville, PA 15825
814/849-2308

SOUTH CAROLINA

Pee Dee Tank Company
P.O. Box 582
Florence, SC 29503
803/669-3381

SOUTH DAKOTA

Huron Culvert & Tank
P.O. Box 1439
Huron, SD 57350
605/352-8643

TEXAS

Modern Welding Company, Inc.
P.O. Box 15215
Houston, TX 77220
713/675-4211

Star Tank & Trailer Mfg. Co.
P.O. Box 85
Rhome, TX 76078
817/636-2215

Watco Tanks
P.O. Box 369
La Vernia, TX 78121
512/779-2411

Willborn Brothers Company
P.O. Box 2089
Amarillo, TX 79105
806/372-4311

UTAH

Brown-Minneapolis Tank Company
P.O. Box 697
Provo, Utah 84603
801/373-8520

Eaton Metal Products Co.
844 S. Chestnut
Salt Lake City, UT 84104
801/973-9055

Mark Steel Corporation
P.O. Box 16006
Salt Lake City, UT 84116
801/521-0670

VIRGINIA

Adamson Company, Inc.
13200 Ramblewood Drive
Chester, VA 23831
804/748-6453

Adamson Company, Inc.
P.O. Box 561
Clarksville, VA 23927
804/374-8103

WASHINGTON

Ace Tank & Equipment
P.O. Box 9039
Seattle, WA 98109
206/281-5000

Reliable Steel Fabricators, Inc.
P.O. Box 9
Olympia, WA 98507
206/352-7575

WISCONSIN

A & S Welding
P.O. Box 99
S. Milwaukee, WI 53172
414/762-1475

Felker Brothers Corporation
1300 Starling Lane
Wausau, WI 54401
715/384-3121

Felker Brothers Corporation
1140 Ashwaubenon St.
Green Bay, WI 54304
414/336-9116

Felker Brothers Corporation
P.O. Box 94
Middleton, WI 53562
608/251-5610

Lannon Corporation
P.O. Box 516
Lannon, WI 53046
414/251-7890

USEMCO, Inc.
P.O. Box 583
Tomah, Wisconsin 54660
608/372-5911

WYOMING

Eaton Metal Products Co.
920 East C Street
Casper, WY 82601
307/234-0870

Steel Tank Institute®

5-87-1354

1. PRODUCT NAME

sti-P_3® Dual Wall Protected Underground Steel Storage Tanks

2. MANUFACTURER

Licensed Manufacturers of sti-P_3® Protected Underground Storage Tanks are represented by:
STEEL TANK INSTITUTE (STI)
728 Anthony Trail
Northbrook, Illinois 60062
Phone: (312) 498-1980

3. PRODUCT DESCRIPTION

sti-P_3® dual wall tanks are fabricated in strict conformance with Underwriters' Laboratory, Inc., Standard UL 58 and the sti-P_3® Specification for External Corrosion Control of Underground Steel Storage Tanks. UL has designated two types of dual wall tanks. A Type I tank is a primary tank wrapped by an exterior steel shell that is in direct contact with the primary tank. The exterior shell may be wrapped less than or around the full 360 degrees of the primary tank circumference. The STI Standard for Dual Wall Underground Steel Storage Tanks is a standard describing Type I dual wall tank construction which includes built-in monitoring capability. A mandate for the protection of the environment and underground water reserves has resulted in an increasing number of states, counties, and municipalities requiring underground tanks with secondary containment. Hazardous wastes must be secondarily contained. The Federal EPA will require secondary containment of all chemical tanks.

A dual wall tank designated by UL as Type II consists of an outer tank that is physically separated from the inner primary containment tank by standoffs. This construction is specified in unusual circumstances, such as when containment of the outer tank must exceed the 100% volume stored within the inner tank. The remainder of this brochure deals primarily with Type I construction.

The pre-engineered sti-P_3® Dual Wall Tank is an affordable secondary containment system that combines the sound engineering principles and state of the art technology of secondary containment with the most widely accepted and established procedures for exterior corrosion protection; heavy duty protective dielectric coating, cathodic protection, and electrical isolation. sti-P_3® Dual Wall Tanks are installed wherever fuels, chemicals or other liquids are stored such as gasoline service stations, airports, truck terminals, industrial plants and large commercial buildings. sti-P_3® tanks are compatible with all known and anticipated fuels, including methanol and ethanol blend gasolines, as well as a vast array of chemicals. For more information, consult with your local sti-P_3® licensed manufacturer.

Protected sti-P_3® Dual Wall tanks offer a 30-year limited warranty and are available in various capacities and dimensions. Standard sizes range from 300 to 50,000 gallons; other sizes can be custom fabricated.

SPEC-DATA®

This Spec-Data sheet conforms to editorial style prescribed by The Construction Specifications Institute. The manufacturer is responsible for technical accuracy.



All tanks are fabricated and completely fitted at the manufacturer's plant. STI requires that all tanks be shipped with a means for monitoring cathodic protection; both Protection Prover 1® and Protection Prover 2® are factory fabricated devices for tank monitoring.

4. TECHNICAL DATA

The sti-P_3® Dual Wall Tank has a double wall intimate wrap construction that will allow for fluid to pass through the interstice. This interstitial space can easily be monitored. Monitoring provides a method of giving advance notice of a leak to avoid environmental contamination.

Inner Tank: The inner tank (including pipe connections, manholes, etc.) are constructed in strict accordance with UL-58. The exterior shell of a Type I secondary containment tank shall not be greater than five times its diameter.

Outer Tank Wrap: Construction of the dual wall (outer wrap) is separate from the inner wall, but intimate contact or face to face layup will occur. The outer wrap is welded to the inner tank at the proper perimeter of the outer wrap, where the two are joined to make the secondary containment air/liquid tight.

The outer wrap is protected from corrosion by the sti-P_3® System. The sti-P_3® trademark name is derived from these three forms of corrosion protection.

Electrical Isolation: Dielectric nylon reducing bushings or flange isolators are used in each tank opening in order to isolate the tank from connecting steel pipes. This prevents stray currents from entering the tank through the piping system, and eliminates unnecessary anode current drain.

Electrically Insulating Exterior Protective Coating: A good dielectric coating nearly eliminates the steel tank area from exposure to corrosive soil environment. It also reduces the amount of protective current needed for cathodic protection. Every new coating application must be tested in accordance with sti-P_3® requirements prior to its acceptance into the sti-P_3® specifications. Every coating application requires quality control inspection such as dry film thickness readings. The coating is applied over the steel surface after blast cleaning, per Steel Structures Painting Council Surface Preparation Specification SSPC-SP-6-63 Number 6.

The ten-point Spec-Data® format has been reproduced from publications copyrighted by CSI, 1964, 1965, 1966, 1967, and used by permission of The Construction Specifications Institute, Inc., Alexandria, VA 22314.

Steel Tank Institute
February 1988
(Supersedes August 1986)
13
LIQUID AND GAS STORAGE TANKS
Dual-Wall Corrosion-Protected
Underground Steel Storage Tanks

Cathodic Protection: Galvanic anodes of magnesium or zinc are attached to each tank to mitigate the corrosive attack of the steel. These anodes sacrifice themselves to further protect the tank from corrosion. The number and size of anodes is directly proportional to the surface area of the tank exposed to the soil.

Leak Detection Monitoring Capability: The dual wall tank design features a monitoring well which allows for easy monitoring of the interstitial space. There are a number of effective monitoring methods that can be used with sti-P_3® Dual Wall Tanks.

- Manual, regular sticking of the interstitial space
- Electronic monitoring (constant)
- Mechanical (float devices)
- Pressure or vacuum method

Recommended methods of monitoring may vary with different agencies, regulatory authorities or codes. All test equipment must remain electrically isolated from the tank after installation. Check with your local sti-P_3® licensee manufacturer for more details.

CAUTION: "Precision" Tank Testing as defined by NFPA Code 329 is a redundant test on dual wall tanks with leak detection. The interstice introduces additional variable into most "Precision" test techniques which are difficult to account for.

Testing: The inner tank and interstitial space of the sti-P_3® Dual Wall Tanks are tested prior to shipment in the following manner:

Upon completion of the inner tank before applying the outer wrap the inner tank is tested in accordance with UL-58, by applying internal air pressure not less than 5 pounds per square inch or more than 7 pounds per square inch.

Upon completion of the Dual Wall Tank fabrication, with the application of the outer wrap, the inner tank is tested again by applying an internal pressure of 5 pounds per square inch.

While maintaining the pressure of the inner tank, the outer wrap is tested by applying a maximum of 5 PSIG in the interstitial space. All visible seams and welds are then covered by a soap solution or equivalent material for the detection of leaks. Tanks incorporating a vacuum leak detection system within the interstice will also be tested with a 6" Hg vacuum at the factory for up to 24 hours after pressure testing.

Testing of tanks in the field should follow the procedure below: If leaks are detected appropriate repairs are made to establish tightness and the tanks are then retested.

DUAL WALL TANK TEST PROCEDURE

1. Close Valve B.
2. Open Valve A and raise Gauge #1 to 5psi.
3. Use soap solution on any place the inner tank is exposed (on 360 degree containment, hold pressure for two hours).
   Comment: This step will raise pressure on Gauge #2 due to tank head deflection.
4. Close Valve A. Remove air line from Air Supply.
5. Open Valve B and allow pressure to equalize.
6. Soap all seams and fittings.
7. Close Valve B and open Valve A.
8. Pressure will drop at Gauge 2 but should stabilize. Pressure should maintain at new level for one hour.

NOTE: WARNING

1) Because there is so little space in the interstice (area between the inner and outer wall), it is dangerous to connect a high pressure air line directly to the monitoring pipe.
2) Manufacturers will furnish special test instructions for tanks shipped with an interstitial vacuum monitoring system. When so required, a 5.3" Hg vacuum test held for one hour will satisfactorily test the interstice.

5. INSTALLATION

1. Excavation and Bedding

1.1 The excavation should be free from any hard or sharp material that may cause damage to the tank coating. (Care should be taken during installation that foreign matter is not introduced into the excavation or backfill.)

1.2 The bottom of the excavation should be covered with clean sand or gravel to a depth of one foot, suitably graded and leveled.

1.3 The excavation should extend a distance of at least one foot around the perimeter of the tank providing sufficient clearance for anodes.

1.4 Where anchoring by means of a concrete slab is required, the tank must *not* be placed directly on the pad. A layer of fine gravel or pea gravel, sand or No. 8 crushed stone (No. 8 coarse aggregate ASTM-448) at least 6 inches deep must be spread evenly over the dimensions of the pad to separate the tank from the pad. The tank should not be placed on any

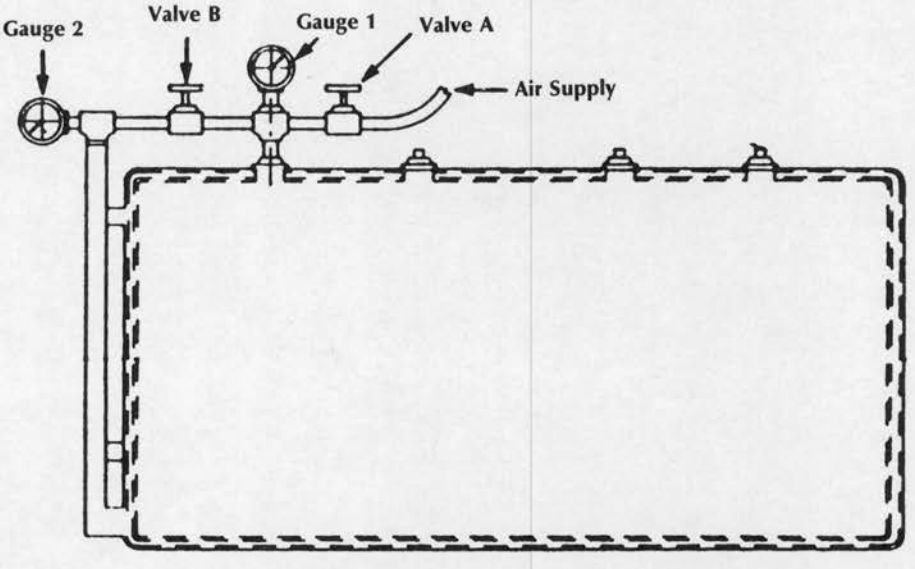

Tank Size Gallon Capacity	Maximum Diameter Inches	Meters	Nominal Material Thickness Inner Tank	Outer Wrap Shell	Outer Wrap Heads
up to 285	42	1.07	10 GA. ~ .135"	.135	.135
286 to 560	48	1.22	10 GA. ~ .135"	.135	.135
561 to 1,110	64	1.63	10 GA. ~ .135"	.135	.135
1,101 to 4,000	84	2.13	7 GA. ~ .179"	.135	.179
12,001 to 20,000	96	2.44	¼" ~ .250"	.135	.179
	126	3.20	¼" ~ .250"	.179	.250
12,001 to 20,000	144	3.66	5/16" ~ .312	.179	.250
20,001 to 50,000	144	3.66	⅜" ~ .375"	.179	.250

other hard or sharp material that can cause deformation of the tank or damage to the coating.

1.5 If installation area is in a tidal area, the tank "bedding" material should be fine gravel or pea gravel, rather than sand.

2. Above Ground Air Test

2.1 The temporary plugs and thread protectors installed by the manufacturer should be removed. Apply compatible, non-hardening pipe sealant to internal bushing threads. Permanent metal plugs should be installed at all unused openings.

2.2 The dielectric bushings in sti-P_3® tanks should not be removed from the unused openings. Plugs used to temporarily seal the tank for the above-ground air test but later removed for pipe installation should not be over-tightened. Care should be taken not to crossthread or damage the nonmetallic bushings when replacing plugs or installing required tank piping.

2.3 An air test of the tank above ground is required. Pressure should not exceed 5 pounds per-square-inch (PSIG) while a soap solution is applied to weld seams. Note: Dual wall tank air testing will differ. Please refer to the Dual Wall Tank Test Procedure.

2.4 Take necessary safety precautions during air tests. Do not leave tanks unattended.

3. Before placing the tank in the excavation, all dirt clods and similar foreign matter should be cleaned from the tank, and areas of coating damage should be repaired with a touch-up coating provided.

4. When so shipped, remove protective plastic covering from weld-on zinc anodes to assure proper anode operation. Verify integrity of anode connection prior to backfill.

5. Tank Handling

5.1 Equipment to lift the tank should be of adequate size to lift and lower the tank without dragging and dropping to ensure no damage to the tank or the coating.

5.2 Tanks should be carefully lifted and lowered by use of cables or chains of adequate length attached to the lifting lugs provided. A spreader bar should be used where necessary. Under no circumstances use chains or slings around the tank shell.

6. Anode Integrity

6.1 **sti-P_3®** tanks may be equipped with either zinc or magnesium anodes. Whereas magnesium anodes are designed only for installation in soil resistivities of 2000 ohms-cm or greater, zinc anodes are most effective in low resistivities.

6.2 After an **sti-P_3®** tank has been placed in the excavation, if anode is connected by a lead wire, attachment to the tank should be checked to assure this connection has not been damaged. Where damaged, the connection must be reestablished in strict accordance with **sti-P_3®** specifications.

7. Anchoring

7.1 High water tables or partially flooded excavation sites exert significant buoyant forces on tanks. Buoyant forces are partially resisted by the weight of the tank, the backfill and the pavement atop the tank. Additional buoyant restraint when required is obtained by using properly designed hold down straps in conjunction with concrete hold down slabs or deadman anchors.

7.2 Special care should be exercised when installing hold down straps to ensure that the straps are separated from the tank by a separating pad made of inert insulating dielectric material. The separating

(A) External Monitoring Well

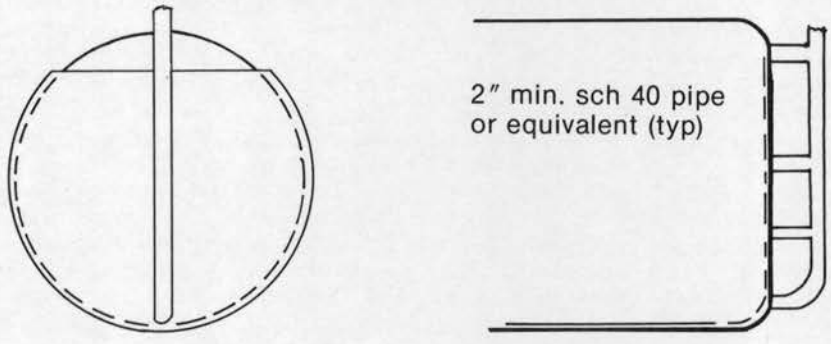

(B) Monitoring Well With Sump

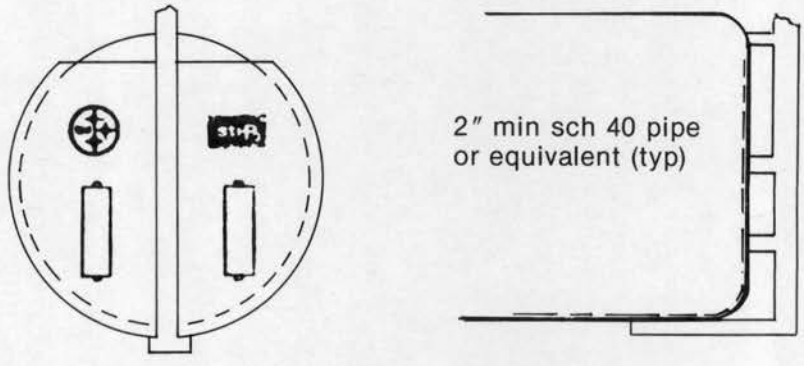

(Typical End View of an sti-P_3® Tank)

(C) Interstice Monitoring Opening

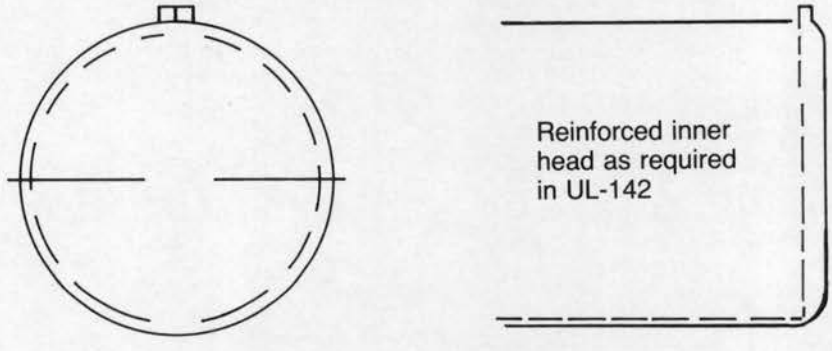

pad should be wider than where the hold down straps would come into direct contact with the tank shell.

8. Backfilling

8.1 Homogeneous backfill consisting of clean sand, gravel, or other non-corrosive inert materials similar to bedding material shall be placed along bottom sides of tank to ensure that the tank is fully and evenly supported around bottom quadrant.

8.2 Prior to backfilling top of tank, all openings should be visually inspected to assure that the **sti-P_3®** dielectric nylon bushings remain in place. Where flanged openings have been used, the dielectric isolation should be confirmed with a continuity tester. No current should pass through the factory installed dielectric flanges. Dielectric isolation is required to assure tank integrity.

9. Final Air Test

9.1 Install required tank piping using compatible non-hardening sealant, taking care not to cross-thread or damage the nonmetallic bushings. Torque of 400 to 1,000 ft-lbs. may be required to fully insert pipe.

9.2 Where air or hydrostatic testing is required after installation, the pressure applied should not be in excess of 5 pounds per-square-inch (PSIG) as measured at the top of the tank.

10. Tank Monitoring System Installation

10.1 Prior to completion of the backfill, the **PROTECTION PROVER 2®** monitoring terminal located near the top of the tank must be positioned as follows:

10.2 Select a terminal location on a pipe near grade that will be accessible through a grade manhole upon completion of installation.

10.3 Loosen the black nylon pipe lashing by releasing the locking tab. Uncoil enough lead wire from the tank mounting lug to reach the terminal location with an additional four feet of slack.

10.4 Secure the **PP2®** terminal to the pipe by tightening the black nylon pipe lashing. The lead wire terminations should remain sealed.

10.5 Route wire to avoid strain or breakage during backfill. Do not cover **PP2®** terminal with backfill material.

10.6 If the tank is equipped with a **PROTECTION PROVER 1®** monitoring system, which includes a monitoring test station mounted at the end of the tank, prior to any backfilling, extend the monitoring system to 4" below grade level without pulling it out of the mounting bracket. The **PP1®** test station should be protected by a grade manhole of 7½" minimum diameter.

11. Contact between the steel tank and the following equipment can nullify the cathodic protection design: external or internal piping, pumps, valves, electrical gauging or monitoring equipment, and grounding systems. A simple continuity test between the **PP2®** lead wire and each connected system will verify the electrical isolation. Continuity should not be present.

12. The backfill should be deposited carefully around tank and to a depth of at least one foot over tank to avoid damage to coating especially where tamping is required. (See NFPA 30 and state or local codes for minimum depth of cover required.)

13. All tanks must be monitored to assure proper cathodic protection of the tank. Monitoring should be accomplished by taking structure to soil voltage readings within 1 year after installation, and then in 5 year intervals for the life of the installation. Follow applicable local, state, and federal regulations for additional tank monitoring requirements.

14. Obtain tank to soil potential readings with a high impedance voltmeter and a copper/copper sulfate reference electrode placed immediately above the tank in soil. Generally a reading more negative than –850 millivolts indicates the tank is protected. Reference NACE RP-02-85 for more specifics on protection criteria.

6. AVAILABILITY AND COST

Availability: sti-P_3® protected underground steel storage tanks are available from licensed manufacturing plants throughout the United States. Please call Steel Tank Institute at (312) 498-1980 for the licensee nearest you.

Cost: Information on protected steel tank costs can be obtained directly from sti-P_3® licensed manufacturers. Installation costs should be obtained from tank installation contractors.

7. WARRANTY

These tanks are backed with a 30 Year Limited Warranty against leakage from corrosion. Stated obligations to both parties are defined and delivered with each tank, and its serial number registered on an individual basis with the Steel Tank Institute (STI). A copy of the Warranty is available from STI.

To assure adherence to standards and sti-P_3® specifications, members of the Steel Tank Institute (STI) are inspected by independent quality control inspectors. As part of this program, inspectors make unannounced visits to all the plants producing sti-P_3® underground tanks to certify that fabricating and assembly procedures, as specified by Steel Tank Institute, are being followed in every detail. Quality fabrication and conformity to strict specifications are thus assured.

8. MAINTENANCE

No maintenance is required on protected underground steel storage tanks. Protection Prover 1® or, as an alternate, Protection Prover 2® cathodic protection monitoring system is provided and factory installed on each tank.

9. TECHNICAL SERVICES

Engineering and installation assistance is provided by sti-P_3® licensed tank manufacturers.

As a guide to writing specifications, include: "Provide underground steel storage tanks conforming to the Contract Drawings, Underwriters' Laboratories, Inc. Standard UL 58, (or other construction standards), and the Steel Tank Institute Standard for dual wall tanks. The corrosion control system shall be in strict accordance with the sti-P_3® labels."

10. FILING SYSTEMS

SPEC-DATA® II

Sweet's Industrial Catalog code 13200/STE. Additional literature is available from the Steel Tank Institute.

XERXES CORPORATION
CENTURY FIBERGLASS™
HEIL PROCESS EQUIPMENT™
ORNYTE® FIBERGLASS

RECEIVED
JAN 0 6. 89
MPCA, Hazardous
Waste Division

January 6, 1989

Thomas P. Clark
Tanks and Spills Section
Hazardous Waste Division
MINNESOTA POLLUTION CONTROL AGENCY
520 Lafayette Road
St. Paul, MN 55155

Dear Mr. Clark:

Thank you for the opportunity to offer our comments on the rules for underground storage tank management.

Your letter refers to the Federal Register dated September 23, 1988. Basically, Xerxes Corporation, a manufacturer of fiberglass underground storage tanks, is pleased with the new federal regulations on underground storage. We have several comments and concerns of which we will address in this letter and refer to them by the numerical listing in the Federal Register. Our comments are based on our many years of experience in the providing of non-corrosive fiberglass tanks.

Federal Register

Subpart B - UST Systems: Design, Construction, Installation & Notification
280.20 Performance standards for new UST systems.
(e) Certification of installation. (1).

- Xerxes does a short training session with anyone interested in installing our underground storage tanks; however, this training is not intended to be the total certification of installation since our contractors are instructed during our session only on the particulars regarding the tank itself and its installation. Specifically, we do not give any instruction on piping and other peripheral installation items. We know that the State of Minnesota is working on installation contractor certification, therefore a year from now it will be only a moot point.

Federal Register

Subpart B - UST Systems: Design, Construction, Installation & Notification
280.20 Performance standards for new UST systems.
(a) Tanks. (3) The tank is constructed of a steel-fiberglass-reinforced plastic composite;

- Under this section, the steel fiberglass reinforced plastic composite tank is allowed without the use of cathodic protection. Many of the installation contractors, installers of steel tanks as well as Xerxes tanks, have brought to our attention that, in the case of this type of tank - "FRP clad," it is easy to scratch the surface of the fiberglass cladding on the tank, causing the potential for point corrosion which would result in accelerated corrosion. Our position is that we feel an anode or other type of cathodic protection should be required on all steel tanks as a safety precaution.

  Three states - Michigan, Maine and Massachusetts are requiring any new tanks of steel to also have the addition of cathodic protection, including those that are fiberglass clad.

Subpart B - UST Systems: Design, Construction, Installation & Notification
280.21 Upgrading of existing UST systems.
(b) (1) Interior Lining and (2) Cathodic Protection.

- We believe that, since no lining or cladding or coatings are ever perfect, interior lining should be allowed only if it is combined with cathodic protection, which is the third alternative shown under the "Upgrading of existing UST systems." Interior lining does not add to the structural integrity of the tank, but is merely a temporary stop-gap and is entirely dependent on the quality of the work done by the technician.

  As far as the use of cathodic protection only, it is dangerous to do this type of retrofit since any perforations that previously had been plugged by the rust would, in a short amount of time (several months), become loosened by the addition of the cathodic protection and a tank that may not have leaked at the onset would become a leaker after the addition of the cathodic protection.

We are enclosing several documents that will substantiate our statements and ask that you please contact us if you have any questions.

Yours truly,

Terry Jensen

Terry Jensen
Manager
Marketing Services

PAPER NUMBER
27

CORROSION 83

The International Corrosion Forum Sponsored by the National Association of Corrosion Engineers
Anaheim Convention Center, Anaheim, California
April 18-22, 1983

INFLUENCE OF SURFACE PREPARATION UPON PERFORMANCE OF PROTECTIVE COATINGS IN ATMOSPHERIC ENVIRONMENTS

(A Ten-Year Summary of NACE T-6H-15 Panel Exposure Tests)

by

Kenneth B. Tator[1]
John D. Trim[2]
Kenneth E. Buffington[3]
S. Reed Calhoun[4]

ABSTRACT

In 1968, NACE Task Group exposed a total of 445 test panels at seven exposure locations in the United States. The test panels were prepared using eight different surface preparation methods, and were coated using five different coating systems. The test panels have been evaluated yearly, and the grading results have been compiled by a sophisticated computerized data processing system.

A ten-year overview summary of the test panel evaluation results is presented in this paper, with major emphasis upon the influence of surface preparation on coating performance. A much more detailed ten-year report, providing all statistical tabular data and data summaries from which this paper was written is available (at cost) from NACE.

[1] KTA-TATOR, INC., 115 Technology Drive, Pittsburgh, PA 15275

[2] Corrosion Service Company, Ltd., 369 Rimrock Road, Downsview, Ontario, M3J 3G2, Canada

[3] Lukens Steel Company, Coatesville, PA 19320

[4] 698 Hurley Road, Coatesville, PA 19320

Publication Right

Copyright by the author(s) where copyright is applicable. Reproduced by the National Association of Corrosion Engineers with permission of the author(s). NACE has been given first rights of publication of this manuscript. Requests for permission to publish this manuscript in any form, in part or in whole, must be made in writing to NACE, Publications Dept., P. O. Box 218340, Houston, Texas 77218. The manuscript has not yet been reviewed by NACE, and accordingly, the material presented and the views expressed are solely those of the author(s) and are not necessarily endorsed by the Association.

Printed in USA

In 1968, NACE Task T-6H-15 commenced a panel testing program in order to assess the effects of surface preparation on the service life of protective coatings exposed in atmospheric environments.

Eight various types of surface preparation were used to clean the panels prior to coating. Five different coating systems were applied over the panels, and the coated panels were exposed at seven industrial locations around the United States.

8 Surface Preparations

Code	Description
1	Intact Millscale
2	Pickle & Phosphatize
3	NACE 4 Brush Sandblast
4	NACE 3 Commercial Sandblast
5	NACE 2 Near-White Sandblast
6	NACE 1 White Sandblast
7	NACE 1 White Gritblast
8	NACE 1 White Shotblast

5 Coating Systems

Code	Description
1	3-Coat Vinyl
2	3-Coat Epoxy Polyamide
3	3-Coat Chlorinated Rubber
4	Post Cured Zinc/Epoxy
5	Self Cured Zinc/Epoxy

7 Exposure Locations

Code	Description
1	Kure Beach
2*	Arco - Philadelphia, PA
3*	Dow - Freeport, TX
4	Ameron - Brea, CA
5	PPG - Barberton, OH
6	Carboline - St. Louis, MO
7*	Monsanto - St. Louis, MO

* Unfortunately, test panels at Arco, Dow, and Monsanto have been lost and currently test panels remain only at the four remaining locations.

Note: More detailed information on the surface preparations, coating systems, and exposure locations is appended.

Originally, a total of 445 coated test panels, each measuring 6 inches by 12 inches were placed on exposure. A 3-inch scribe was milled into each test panel to assure the same length and depth of cut. (Testing was done in duplicate at each exposure location except Ameron and Carboline, where only single panels of each combination of surface preparation and coating system were exposed.)

The test panels have been graded annually by the same inspection team since 1973. The gradings are designed to be relatively standardized for adaptation to computer data manipulation. Photographs are taken of each test panel at the time of grading evaluation.

The following grading system is used:

Rust Grading--Overall and Local

The ASTM D-610 grading system was converted to a scale of 0 to 100 corresponding to ASTM D-610 ratings of 6 to 10 as shown in the following table.

ASTM D-610 Grade	T-6H-15 Points	% of Area Failed
10	100	0.00
9	75	0.03
8	50	0.10
7	25	0.30
6 or less	0	1.00

This rating procedure is used for both the overall and local rust grade ratings.

Edge Perimeter Points

The 6 x 12 inch panel perimeter of 36 inches is graded as to the amount of rusting in inches. A rating of 100 shows no rusting, while complete rusting around the perimeter will show a rating of zero. For example, perimeter rusting of 18 inches would have a rating of 50.

Edge Penetration--Maximum and Average

The depth of rust penetration from the edges is measured in increments of 1/32 inches. The maximum category is the one point of the most severe edge penetration. The average is a weighted average of all penetrations around the perimeter.

Scribe Undercut

Measured values of maximum and average scribe undercutting, in the units of 1/32 inch are averaged to produce a single scribe undercut value. The averaging of the two undercutting values is done by a program in the computerized system. In some analyses, the maximum and average scribe undercut evaluations are treated separately.

A panel showing no visible undercutting failure receives a rating of 100, while a measurement of 32, which is 1 inch of undercutting, has a rating of zero.

A very sophisticated data processing system has been used since 1973 to analyze the gradings obtained each year. Inspection data is processed into an analysis deck which contains from each panels its location, surface preparation and coating system, along with performance measures (rust gradings, edge perimeter and penetration, and scribe undercut). Any of these variables can be compared statistically with any other variable in order to determine the influence of one upon another. Additionally, rates of failure can be established to determine trends, or for example if desired, predicted future failure of any of the variables.

The data presented herein is a culmination of ten years exposure of the test panels, with the emphasis upon determination of the rate of influence of each surface preparation upon coating longevity. For this purpose, detailed information was obtained for each panel grading area, grouped by surface preparation and exposure location. A typical data sheet is appended as Attachment 1. The seven matrices in this attachment display the apparent effects of surface preparation at test panel grading areas for each coating system at each exposure location at a given point in time (1979).

Information regarding the respective coating system performances over the various surface preparations was obtained from a composite statistical analysis of all test panels at all exposure locations--and is somewhat more general in nature. A typical data sheet is appended as Attachment 2. This sheet shows the 1979 average and spread of test panel grading data, along with a matrix showing statistically significant differences between variables (surface preparations, coating systems, and exposure locations).

Similarly, yearly information on the effect of surface preparations upon gradings of the scribe undercut is presented as Attachment 3. This sheet "adds motion" to the preceeding "snapshots", and shows the grading means for each surface preparation at the scribe undercut for each year since 1973.

TEN YEAR RESULT SUMMARY

While the test results can be presented a number of different ways, it is felt a comparison based on failures over plane (flat) areas compared with edge or damage failure will be most meaningful. Accordingly, for each of the different surface preparation methods, the grading evaluations at the rust overall and local areas are compared with all other grading areas (which are indicative of undercutting from an edge or scribe). In the field on actual steel structures, it is anticipated the performance of the coating system over a welded steel storage tank will most closely approximate the rust overall and local gradings on the test panels. Conversely, where relatively small structural members are used on, for example, a bridge or truss, it is felt the edge gradings would be most relevant.

The "results" section is categorized as follows:

1. Surface Preparation 1 - Millscale Bearing
2. Surface Preparation 2 - Pickling and Phosphatizing (P&P)
3. A Comparison Between Surface Preparations 3 (NACE Brush Sandblast), 4 (NACE Commerical Sandblast), 5 (NACE Near-White Sandblast, and 6 (NACE White Metal Sandblast)
4. A Comparison Between Surface Preparations 7 (Rotary Wheel White Metal Cleaning with Steel Grit) and 8 (Rotary Wheel White Metal Cleaning with Steel Shot)
5. Rotary Wheel White Metal Blast Cleaning (SP7&8) Compared with Sandblast Cleaning (NACE Brush Blast, NACE Commercial, NACE Near-White, and NACE White Metal)
6. Overall Comparison Between All Surface Preparation Methods
7. Coating System Performance--Overall Evaluation
8. Exposure Location Severity

Surface Preparation 1 - Millscale Bearing

The panel test results are conclusive in establishing that an intact millscale surface is not a suitable substrate for long-term protection beneath any of the coating systems evaluated.

The presence of intact millscale on a steel substrate beneath a coating system will provide an initial barrier protection. However, this "initial protection" is rather short-lived, and is a function of:

a) The severity of the environment--a more severe environment will shorten the initial protection from millscale.

b) The type of corrosion or coating failure--plane, flat areas will be protected longer than edges, or areas where the coating has been mechanically damaged.

In every case, the millscale spalls from the surface and leads to rapid undercutting and subsequent progressive spalling outward from the point of initial failure. The process occurs more rapidly in more severe environments such as Kure Beach (salt air) and PPG Barberton (atmospheric pollutants), as opposed to milder weathering environments such as Ameron Brea, California (Southern California) and Dow Freeport (South Texas weathering environment with only light industrial pollution).

While no coating system is particularly effective in significantly retarding millscale failure; a trend analysis discloses that where there are statistical differences between coating systems, the self cured zinc-rich/epoxy system appears to reduce the rapidity of millscale failure in comparison with the epoxy and chlorinated rubber systems at edges and the scribe. On plane (flat) areas, the epoxy system appears slightly preferable to the chlorinated rubber system, and statistically equivalent to the zinc-rich. (It should be noted that the vinyl and self cured zinc-rich systems were not applied over a millscale bearing surface, and accordingly a comparative evaluation for these systems cannot be made.)

Surface Preparation 2 - Pickling and Phosphatizing

Generally, pickling and phosphatizing (P&P) is a marginally inferior surface preparation compared with sandblasting for plane (flat) steel surfaces in the more severe environments (notably Kure Beach and PPG Barberton). As a surface preparation beneath the self curing zinc-rich system, P&P was clearly inferior in preventing failure at plane (flat) areas compared with all other surface preparations except intact millscale.

However, at edges and areas of mechanical damage, P&P is generally comparable with sandblasting between a commercial and near-white cleanliness for the organic systems (vinyl, polyamide epoxy, and chlorinated rubber). For the self cured inorganic zinc-rich system, at the 90% confidence bands there are no statistically significant differences between P&P and other sandblasting methods. The zinc-rich system is performing well over a pickled and phosphatized surface.

P&P is comparable with the better grades of sandblasting for vinyl, polyamide epoxy, chlorinated rubber, and the self-curing zinc coating systems where resistance to undercutting from edges and mechanical damage is desired. (P&P was not used as a surface preparation beneath the post curing zinc-rich system.)

A Comparison Between Surface Preparations 3 (NACE Brush Sandblast), 4 (NACE Commercial Sandblast), 5 (NACE Near-White Sandblast), and 6 (NACE White Metal Sandblast)

Blast cleaning in the field using silica sand as an abrasive is perhaps the most widely used method of surface preparation for corrosion resistant coatings. Recently, as a result of potential silicosis health hazards, the use of silica-free abrasives manufactured from refractory slags has increased. While such abrasives were not included in this study (due to their lesser useage in the mid-1960's when the panel program was planned--and constraints upon the size of the testing program)--it is likely that the performance of such abrasives will be similar to that of silica sand.

During the initial years of the T-6H-15 exposure, there did not appear to be any statistically significant differences between coating system performance and degree of cleanliness by sand-blasting. Even presently, at some of the milder environmental exposure sites (Ameron Brea, California, and Dow Freeport, Texas), there are still no significant differences between any of the sandblasting surface preparation methods for some coating systems. However, for most coating systems at most exposure sites, the test data discloses that the better the degree of sandblasting cleanliness, the better the performance of the coating system.

For rust gradings of plane (flat) surfaces, there are still some notable exceptions to the "cleaner is better" generality. At Kure Beach and PPG Barberton--two relatively severe exposures, NACE 3 (Commercial Sandblast) performs better for the vinyl system than near-white and white metal sandblasting.

Similarly, commercial blast cleaning as a preparation for the polyamide epoxy system is generally better than white and near-white at Dow Freeport, while at other exposure stations, there is no significant statistical difference between sand-blasting surface preparations for the polyamide epoxy system when examined for rusting at plane areas.

With the chlorinated rubber system, commercial sandblasting appears better than the near-white at Kure Beach, Arco, and Dow. However, at PPG Barberton, white metal sandblasting is statis-tically better than all other degrees of sandlbasting when evaluated for plane rusting.

For the post cured zinc system, generally near-white sandblasting is better than white metal, and all other sandblasting preparations for plane (flat) areas. With the self cured zinc system, white metal sandblasting is best at Ameron and Monsanto, and at other locations, there is no statistical difference.

As a general rule, the degree of blast cleaning cleanliness is not a statistically significant factor upon coating system performance when evaluated for rusting initiation at plane (flat) steel surfaces--regardless of coating system.

However, whenever undercutting from an edge or damaged area of the coating is evaluated--the results are substantially different! Generally, white metal sandblasting beneath a given coating system is better than near-white, which is better then commercial. Often, while the differences are not statistically significant, the order of performance between the above degrees of sandblasting is clearly established. These surface preparation differences perhaps can be accounted for by variations in coating thickness (coating system mean thickness in mils over NACE 1 - White Metal 6.38; NACE 2 - Near-White 6.25; NACE 3 - Commercial 6.06; NACE 4 - Brush-Off 6.78).

However, statistically, the data shows that brush sandblast cleaning performs comparatively poorly as a surface preparation for the vinyl, polyamide epoxy, and chlorinated rubber systems, particularly at Dow Freeport and PPG (Barberton and Kure Beach).

In comparison, there appeared to be less difference between sandblasting degrees of cleanliness as a surface preparation for either of the zinc-rich systems. Kure Beach was the only exposure site where a statistically significant difference was noted--brush sandblast cleaning was performing more poorly as a surface preparation than any other degree of sandblasting, or for that matter, any other method of surface preparation (except intact millscale).

In summary, the test panel data does support the contention "the better the sandblasting cleanliness, the better the coating system corrosion protection performance". However, the cleanliness differences are more important with the "organic" systems (vinyl, epoxy, and chlorinated rubber) and at this stage are not as significant with the zinc-rich systems (all of which are performing well over all surface preparations except brush blast cleaning - NACE 4).

A Comparison Between Surface Preparations 7
(Rotary Wheel White Metal Cleaning with Steel Grit)
and 8 (Rotary Wheel White Metal Cleaning with Steel Shot

Rotary wheel blast cleaning is a very common method of surface preparation prior to coating in many steel fabricating shops both in the United States and abroad. Furthermore, due to lesser wear on the blast cleaning machine, steel shot is the most commonly used abrasive in most machines, followed by steel shot/steel grit mixtures, and lastly by steel grit as the sole abrasive. Rounding and/or fracture of the abrasive as a result of impact during cleaning as well as periodic additions of abrasive to make up for that lost as "fines" in the abrasive air separation

unit, establish a characteristic surface texture and cleanliness for an "operating mix". The T-6H-15 panel testing was done using operating mixes of GL-50 steel grit and S-230 steel shot. The anchor pattern profile for both was 1 to 2 mils.

When evaluating differences between steel shot and grit upon the corrosion rate at plane (flat) areas, the general observation is that the use of steel shot is marginally better than steel grit, especially in the more severe exposure sites at Kure Beach and Barberton, Ohio. However, for the most part, there are no statistically significant differences between either abrasive at most other exposure sites. The zinc-rich systems generally perform well over surfaces blast cleaned with either abrasive, and the differences between the abrasives are not as distinct as those with the vinyl and chlorinated rubber systems (the epoxy system, while performing similarly to the vinyl and chlorinated rubber systems, shows essentially no performance differences over either steel shot or grit). Blast cleaning with steel shot is preferable to blast cleaning with steel grit for the vinyl system at Kure Beach and Barberton. This is likely due to the lesser thickness of the vinyl system compared with all other coating systems. Additionally, the anchor pattern roughness and angularity is greater when a steel grit abrasive is used, resulting in a lesser thickness of coating over the top of peaks of the surface profile.

Similarly, when evaluating undercutting from an edge or damaged area of the coating, there are no significant differences between either abrasive beneath either of the zinc systems--due to the ability of the zinc-rich primer to perform relatively well over all surface preparations (except intact millscale and brush-off sandblast cleaning).

However, as a surface preparation beneath the vinyl, epoxy, and the chlorinated rubber systems, particularly at the severe locations of Kure Beach and PPG Barberton, Ohio, and to a lesser degree Arco Philadelphia and Carboline St. Louis; the steel grit blast cleaning leads to a better coating performance than blast cleaning with steel shot.

Rotary Wheel White Metal Blast Cleaning (SP7&8) Compared with Sandblast Cleaning (NACE 4 Brush Blast, NACE 3 Commercial, NACE 2 Near-White, and NACE 1 White Metal)

When evaluating corrosion initiation at plane (flat) areas, generally rotary wheel blast cleaning to white metal using steel shot is marginally preferable to sandblast cleaning to white metal (or a lesser cleanliness). No evident differences between sand-blasting and rotary wheel cleaning using steel grit are apparent.

However, when edge and scribe damage undercutting corrosion is considered, rotary wheel blast cleaning to white metal statistically shows poorer performance than sandblast cleaning to white, near-white, and occasionally commercial degrees of

cleanliness. Restated, rotary wheel white metal blast cleaning using either steel shot or grit compares with sandblasting to a commercial cleanliness, and shows a poorer performance when compared with white and near-white sandblasting.

As has been the case previously, the differences between sandblasting and rotary wheel cleaning are more evident in the more severe exposure sites, and as a surface preparation beneath the organic (vinyl, epoxy, and chlorinated rubber) coating systems.

Beneath the zinc-rich systems, however, virtually all blast cleaning methods appear, at least at this time, equivalent. The performance of the zinch-rich systems over rotary shot and grit blast cleaned steel, and as well white, near white, commercial, and brush sandblasted steel was excellent, and showed no statistically significant differences.

Overall Comparison Between All Surface Preparation Methods

The order of performance of all test panels over all surface preparations at all exposure locations establishes some statistically significant (at 90% confidence level) trends.

When evaluation is done for corrosion initiation at plane (flat) areas, pickling and phosphatizing is inferior to all other surface preparations, and rotary wheel shotblast cleaning to white metal marginally outperforms sandblasting. Except for these, there are no other statistically significant differences between surface preparation methods.

However, when evaluating for undercutting at the edges and scribe, white metal sandblasting is the best surface preparation, follows by near-white sandblasting. Pickling and phosphatizing is generally equivalent to sandblasting somewhere between a near-white and commercial cleanliness. Rotary wheel white metal blast cleaning using steel shot and grit are statistically equivalent (although grit is ranked better than shot), and both are statistically equivalent to commercial sandblast cleaning.

Brush sandblast cleaning is inferior to all surface preparation methods except one (intact millscale), which is far inferior as a surface preparation method.

Coating System Performance--Overall Evaluation

Without question, the topcoated zinc-rich coating systems (both self and post cured) are superior in performance over all surface preparations at all exposure sites to the "organic" systems (vinyl, epoxy, and chlorinated rubber). The zinc-rich systems have a greater tolerance for variations in blast cleaning degrees of surface cleanliness. They perform well over all types of blast cleaning whether the abrasive is sand, steel grit or shot. Self curing zinc-rich performance over a pickled and

phosphatized surface, although relatively poor at flat (plane) areas, is comparable with blast cleaning at edges and scribe. Performance over brush-off sandblast cleaned surfaces is poor, and zinc-rich coatings (as well as all other coating systems) are ineffective over intact millscale.

The post cured zinc-rich system marginally outperforms the self cured zinc system, even though it has a significantly lesser thickness (mean system thickness of 6.7 mils for post cured zinc, 7.7 for self cured zinc). However, at this time, the performance differences, for the most part, are not significantly different, and both systems are performing well.

The organic systems, on the other hand, are all exhibiting greater corrosion deterioration at all exposure sites, over all surface preparations in comparison to the zinc-rich systems.

However, the performance of the organic systems, when compared to each other shows some interesting trends. When evaluated for rusting and corrosion initiation at plane (flat) areas, there are statistically significant overall differences between system performance, with the vinyl system outperforming the polyamide epoxy, both of which outperform the chlorinated rubber system. Paradoxically, the order of ranking changes when the evaluation is for undercutting at the edges and scribe. The chlorinated rubber shows superior performance to the vinyl, and both are superior to the epoxy system. However, these latter differences are not yet statistically significant. (The mean thickness in mils of the organic coating systems are vinyl 6.0; epoxy 5.9; chlorinated rubber 5.3.)

The data for coating system performance for this report has not been presented in as much detail as that for performance over the various surface preparations. The computer, within its data banks, can present explicit details of coating performances at each exposure site, over each surface preparation, even predicting rates and probabilities of system failure over various surface preparations in a given exposure environment. The information above is a composite summary of coating performance over all surface preparations at all exposure locations.

Exposure Location Severity

The test data clearly demonstrate the PPG Barberton, Ohio industrial site, and the Kure Beach 80-foot seacoast lot in North Carolina are the most severe environments. However, it is evident that the failure mechanisms at each site are different from the other--both by visual examination of the test panels, and examination of the evaluation data.

Failures at Kure Beach are generally similar, except for extent or severity. There is considerable undercutting originating at the scribe and edges. Corrosion failure is more extensive from one side of the panel (the left) due most likely to the prevailing wind at the exposure site.

Coating deterioration at PPG Barberton appears visually different than that occurring at Kure Beach. There is no evident effect from prevailing winds and the extent of undercutting from edges and the scribe is not as extensive. Furthermore, the corrosion product at Barberton occurs as a loose rust scale that readily dislodges from the panel surface. That at Kure Beach takes the form of tightly adherent nodules that protrude outward from the plane area of the panel.

Panel deterioration to the point of failure at plane (flat) areas occurs almost twice as often at Barberton as it does at Kure Beach. Failures due to edge undercutting are similar at both sites, but failures due to scribe undercutting are 1/3 greater at Kure Beach (38) than at Barberton (26). The coating thickness averages of panels at both sites is nearly identical (6.4 mils at Barberton, 6.3 mils at Kure Beach).

All other exposure locations are less severe than Kure Beach and PPG Barberton. For failures originating at plane (flat) areas, Ameron Brea and Arco Philadelphia are least severe, followed in order by Carboline and Dow Freeport.

For edge and scribe failure ratings, Ameron Brea is statistically least severe, followed by Dow Freeport, Carboline St. Louis, and Arco Philadelphia in order.

APPENDIX

SURFACE PREPARATION

All test panels were cut from the same ASTM A-36 hot-rolled millscale bearing steel plate. The eight types of surface preparations used to prepare the test panels prior to coating were:

1. Solvent cleaned with millscale intact.

2. Commercial pickling in sulfuric acid (Horton Process) followed by phosphatizing.

   Note: This method of preparation was not controlled by the T-6H-15 Committee.

3. NACE 4 Brush-Off Blast Cleaned Finish

   Defined as a surface from which oil, grease, dirt, loose rust scale, loose millscale, and loose paint are removed, but tightly adhering millscale, rust, paint, and coatings are permitted to remain if they have been exposed to the abrasive blast pattern, so that flecks of the underlying metal are uniformly distributed over the entire surface. (Comparable to SSPC-SP7-63, Brush-Off Blast Cleaning)

4. NACE 3 Commercial Blast Cleaned Surface Finish

   Defined as a surface from which all oil, grease, dirt, rust scale, and foreign matter have been completely removed and all rust, millscale, and oil paint have been removed except for slight shadows, streaks, or discolorations caused by rust stain or millscale oxide binder. At least two-thirds of the surface area shall be free of all visible residues and the remainder shall be limited to light discoloration, slight staining, or light residues mentioned above. If the surface is pitted, slight residues of rust or paint are found in the bottom of the pits. (Comparable to SSPC-SP6-63, Commercial Blast Cleaning)

5. NACE 2 Near-White Blast Cleaned Surface Finish

   Defined as a surface from which all oil, grease, dirt, millscale, rust, corrosion products, oxides, paint, or other foreign matter have been removed except for light shadows, streaks, or slight discolorations (of oxide bonded with metal). At least 95% of any given surface area has the appearance of NACE 1, and the remainder of that area is limited to slight discolorations. (Comparable to SSPC-SP10-63T, Near-White Blast Cleaning)

6. NACE 1 White Metal Blast Cleaned Surface Finish

   Defined as a surface with a gray-white (uniform metallic) color, slightly roughened to form a suitable anchor pattern for coating. This surface is free of all oil, grease, dirt, millscale, rust corrosion products, oxides, paint, and other foreign matter. (Comparable to SSPC-SP5, White Metal Blast Cleaning)

7. NACE 1 Rotary Wheel Blast Cleaning With Steel Grit - a stabilized working mixture of GL-50 steel grit was used.

8. NACE 1 Rotary Wheel Blast Cleaning With Steel Shot - a stabilized working mixture of S-230 steel shot was used.

PROTECTIVE COATING SYSTEMS

The five protective coating systems being tested in the program are (1) three coats of vinyl, (2) three coats of a polyamide cured epoxy, (3) three coats of a chlorinated rubber, (4) one coat of a post cured inorganic zinc-rich primer plus one coat of the polyamide cured epoxy, and (5) one coat of a self cured inorganic zinc-rich primer plus one coat of a polyamide cured epoxy.

TEST PANEL LOCATIONS

Seven locations were chosen upon initiation of the project as representative of typical industrial, urban, and coastal atmospheric weathering environments where various protective coating systems are commonly used. At each location, the panels are exposed directly to the atmosphere. At all industrial sites except one, the panels are located in areas of fume concentrations but are not subject to splash, spillage, dripping or other forms of wet chemical contamination.

The exposure test locations are:

1. Kure Beach, North Carolina -- The panels are located at International Nickel's exposure facility at Kure Beach. The panels are located approximately 80 feet from mean high tide and are subject to salt air and humid winds which are typical of those found along an ocean coastline as well as the prevailing weather conditions of the North Carolina Atlantic coastline.

2. Arco Refinery, Philadelphia, Pennsylvania -- The test panels are located on the roof of a building in the heart of Atlantic Richfield's Philadelphia refinery and storage yard complex. The predominating exposure atmosphere is typical of an industrial, urban environment.

3. Dow Chemical Company, Freeport, Texas -- The panels are exposed on a rack located on the outskirts of the Dow Chemical Company Freeport complex. The predominating environment is a typical light industrial, semi-tropical Gulf Coast environment with salt air and high humidity.

4. Ameron Corrosion Control Division, Brea, California -- The panels are located in the vicinity of an orange grove on the Ameron Company site in Southern California. The exposure is typical of the Southern California weathering environment inland from the Pacific Ocean.

5. PPG Industries, Barberton, Ohio -- The panels are located on the roof of a building situated within a unit in which ammonia is synthesized. The environment is an urban/industrial environment with the addition of ammonia fume concentrations.

6. Monsanto Queeny Plant, St. Louis, Missouri -- The panels are located on the roof of a building in the vicinity of a vanilla synthesis unit in the center of the Queeny complex. The predominant environment is typical of a light to medium industrial/urban environment in which there is no significant chemical fume contamination. This is the only location where the panels are exposed in a flat (horizontal) position on a roof.

7. Carboline Company, St. Louis, Missouri -- The test panels are located on the roof of the Carboline offices and laboratory. The atmosphere is typical of an urban/light industrial environment. However, the panels are located a short distance from an air conditioning/cooling tower and chloride-containing spray may occasionally drift onto the panels.

ATTACHMENT 1

COMPARISON OF UCT MX (TR-17)

by Surface Preparation

System 3

Location 1

Rank	A	B	C	D	E	F	G	H
SP	6	7	2	5	4	8	3	1
A 6					+	+	+	+
B 7					+	+	+	+
C 2					+	+	+	+
D 5					+	+	+	+
E 4	−	−	−	−				+
F 8	−	−	−	−				+
G 3	−	−	−	−				+
H 1	−	−	−	−	−	−	−	

Location 2

Rank	A	B	C	D	E	F	G	H
SP	2	5	6	4	7	8	3	1
A 2				+	+	+	+	+
B 5				+	+	+	+	+
C 6				+	+	+	+	+
D 4	−	−	−			+	+	+
E 7	−	−	−			+	+	+
F 8	−	−	−	−	−			
G 3	−	−	−	−	−			
H 1	−	−	−	−	−			

Location 3

Rank	A	B	C	D	E	F	G	H
SP	6	8	4	2	7	5	3	1
A 6							+	+
B 8							+	+
C 4							+	+
D 2							+	+
E 7							+	+
F 5							+	+
G 3	−	−	−	−	−	−		+
H 1	−	−	−	−	−	−	−	

Location 4

Rank	A	B	C	D	E	F	G	H
SP	2	4	5	6	7	8	3	1
A 2								+
B 4								+
C 5								+
D 6								+
E 7								+
F 8								+
G 3								+
H 1	−	−	−	−	−	−	−	

Location 5

Rank	A	B	C	D	E	F	G	H
SP	5	6	2	4	7	8	3	1
A 5					+	+	+	+
B 6					+	+	+	+
C 2						+	+	+
D 4							+	+
E 7	−	−					+	+
F 8	−	−	−				+	+
G 3	−	−	−	−	−	−		+
H 1	−	−	−	−	−	−	−	

Location 6

Rank	A	B	C	D	E	F	G	H
SP	2	6	5	4	3	7	8	1
A 2					+	+	+	+
B 6					+	+	+	+
C 5						+	+	+
D 4							+	+
E 3	−	−					+	+
F 7	−	−	−				+	+
G 8	−	−	−	−	−	−		+
H 1	−	−	−	−	−	−	−	

Location 7

Rank	A	B	C	D	E	F	G	H
SP	2	5	6	4	7	8	3	1
A 2								+
B 5								+
C 6								+
D 4								+
E 7								+
F 8								+
G 3								+
H 1	−	−	−	−	−	−	−	

ATTACHMENT 2

COMPOSITE STATISTICAL SUMMARY
SCRIBE UNDERCUT POINTS
1979 DATA

FLRS	RANK	CODE	TREATMENT Name	RANGE From	RANGE To	N	MEAN	SD	SE of MEAN	90% BAND* From	90% BAND* To	ROW VS. COL. DIFF. (see NOTE below) 1 2 3 4 5 6 7 8 5 5
69			Total Sample	0	100	348	67.05	38.28	2.052	63.67	70.43	
			Ex Loc 2	0	100	278	68.91	38.87	2.331	65.07	72.75	
			COATING SYSTEM									
25	4	1	Vinyl	0	100	67	47.46	40.48	4.946	39.32	55.61	0 0 - - - -
29	5	2	Epoxy Polam	0	100	75	46.71	42.01	4.851	38.72	54.7	0 0 - - - -
14	3	3	Chlor Rubber	0	100	69	55.39	36.62	4.409	48.13	62.65	0 0 - - - -
0	1	4	Post-Cured Zn	50	100	60	95.05	7.46	0.963	93.46	96.64	+ + + 0 0 +
1	2	5	Self-Cured Zn	0	100	77	92.53	12.61	1.437	90.17	94.90	+ + + 0 0 +
0		5'	Same, Ex SP 1,2	83	100	60	94.93	3.45	0.445	94.20	95.67	+ + + 0 0 0 +
1		5"	Same, SP 1,2 Only	0	100	17	84.06	24.77	6.008	74.16	93.95	+ + + - - -
			SURFACE PREP.									
7	8	1	None	0	94	13	37.77	44.08	12.226	17.63	57.91	- 0 - - - - -
6	4	2	Pkl/Phos	0	100	40	68.78	35.32	5.585	59.58	77.97	+ 0 0 0 0 0 0
13	7	3	NACE 4 Sbl.	0	100	46	56.96	42.10	6.207	46.73	67.18	0 0 0 - - 0 0
9	3	4	NACE 3 Sbl.	0	100	50	69.58	38.72	5.476	60.56	78.60	+ 0 0 0 0 0 0 0
6	1	5	NACE 2 Sbl.	0	100	51	75.73	32.49	4.549	68.23	83.22	+ 0 + 0 0 0 0 0
6	2	6	NACE 1 Sbl.	0	100	50	75.34	32.61	4.612	67.74	82.94	+ 0 + 0 0 0 0 0
10	5	7	NACE 1 Grbl.	0	100	50	65.50	39.23	5.548	56.36	74.64	+ 0 0 0 0 0 0 0
12	6	8	NACE 1 Shbl.	0	100	48	64.33	41.00	5.918	54.59	74.08	+ 0 0 0 0 0 0 0
			LOCATION									
32	6	1	Kure Beach	0	100	68	41.46	43.99	5.334	32.67	50.24	- - - - - -
10	5	2	Arco-Phila	0	95	70	59.67	35.17	4.204	52.75	66.60	+ - - 0 0
4	2	3	Dow Frpt	0	100	71	85.44	23.72	2.815	80.80	90.07	+ + 0 + +
2	1	4	Ameron Brea	0	100	37	89.78	22.23	3.654	83.77	95.80	+ + 0 + +
17	4	5	PPG-Barberton	0	100	65	66.94	42.26	5.242	58.30	75.57	+ 0 - - 0
4	3	6	Carboline-StL	0	97	37	70.22	28.98	4.764	62.37	78.06	+ 0 - - 0

NOTE: + Row better than Column
0 No difference
- Row worse than Column

Without SYNAC (7) Cards

* Mean ±1.647 SE of Mean

ATTACHMENT 3

GRAPHIC SUMMARY OF ANNUAL AVERAGES

SCRIBE UNDERCUT POINTS

BY SURFACE PREPARATION

SP (1) SP (2) SP (3) SP (4) SP (5) SP (6) SP (7) SP (8) TOTAL

Hand Pkl/Phos. RACE 4 Shl RACE 3 Shl RACE 2 Shl RACE 1 Shl RACE 1 Shl RACE 1 Shl

ATTACHMENT 1

ATTACHMENT 2

ATTACHMENT 3

ATTACHMENT 4

100

75

50

25

00

POINTS

1973-1974 1974-1975 1975-1976 1976-1977 1977-1978 1978-1979 1979-1980 1980-1981 1981-1982

YEARS

ATTACHMENT 4

Coating Thickness (Mils)

Firs.	Rank	Treatments Code	Name	Range Min.	Max.	N	$\bar{X}$	S	$\sigma_{\bar{x}}$	90% Band Low	High	Sig. Diff.[2] from Codes 1	2	3	4	5	6	7	8
–			Total Sample	3.8	10.0	445	6.27	1.12	.053	6.18	6.36								
			Ex Loc 2	3.8	10.0	370	6.29	1.12	.058	6.19	6.38								
			Coating Systems																
–	3	1	Vinyl	4.5	8.0	85	6.01	.72	.078	5.87	6.13		0	+	–	–			
–	4	2	Epxy-Polyam	4.2	8.0	96	5.90	.80	.081	5.77	6.04	0		+	–	–			
–	5	3	Chlr-Rbr	3.8	7.5	96	5.28	.67	.068	5.17	5.39	–	–		–	–			
–	2	4	Post-Cured ZN[1]	4.8	9.0	72	6.78	.93	.110	6.60	6.96	+	+	+		–			
–	1	5	Self-Cured ZN[1]	5.5	10.0	96	7.47	.92	.094	7.32	7.62	+	+	+	+				
		5'	W/out 1 & 2[1]	5.5	10.0	72	7.72	.81	.096	7.57	7.88				+				
			Surf. Preps.																
–	7	1	None	3.8	8.0	36	5.93	.85	.142	5.70	6.17		0	–	0	0	–	–	0
–	8	2	Pkl/Phos	4.2	8.2	48	5.86	1.03	.148	5.62	6.11	0		–	0	–	–	–	–
–	1	3	NACE 4 Sabl	4.0	10.0	60	6.78	1.32	.171	6.50	7.06	+	+		+	+	+	0	+
–	6	4	NACE 3 Sabl	4.5	8.2	60	6.06	0.76	.098	5.90	6.22	0	0	–		0	–	–	0
–	4	5	NACE 2 Sabl	4.0	8.5	61	6.25	1.15	.147	6.00	6.49	0	+	–	0		0	0	0
–	3	6	NACE 1 Sabl	4.2	9.0	60	6.38	1.07	.139	6.15	6.61	+	+	–	+	0		0	0
–	2	7	NACE 1 Whgb	4.5	8.5	60	6.43	1.22	.157	6.17	6.69	+	+	0	+	0	0		0
–	5	8	NACE 1 Whsb	4.2	9.0	60	6.24	1.16	.149	5.99	6.48	0	+	–	0	0	0	0	
			Locations																
–	7	1	Kure Beach	4.2	8.0	74	6.12	0.99	.115	5.93	6.31		0	0	–	0	0	–	
–	5	2	Arco-Phila	4.2	9.0	75	6.17	1.12	.129	5.96	6.38	0		0	–	0	0	0	
–	3	3	Dow-Frpt	4.0	8.5	73	6.35	1.14	.133	6.13	6.57	0	0		0	0	0	0	
–	1	4	Amrn-Brea	4.5	10.0	37	6.58	1.19	.196	6.26	6.90	+	+	0		+	0	0	
–	4	5	PPG-Brbtn	4.0	9.0	74	6.18	1.11	.129	5.96	6.39	0	0	0	–		0	0	
–	6	6	Cbine-StL	3.8	9.0	38	6.15	1.12	.182	5.85	6.45	0	0	0	0	0		0	
–	2	7	Mnsnto-Qny	4.5	9.0	74	6.43	1.18	.137	6.20	6.66	+	0	0	0	0	0		

[1] Plus 1 coat epoxy-polyamide

[2] + = better, 0 = no difference, and – = worse

United States Patent [19]

Ziu

[11] **Patent Number: 4,786,088**

[45] **Date of Patent: Nov. 22, 1988**

[54] **DOUBLE-CONTAINMENT THERMOPLASTIC PIPE ASSEMBLY**

[75] Inventor: **Christopher G. Ziu**, Charlestown, Mass.

[73] Assignee: **Asahi/America, Inc.**, Medford, Mass.

[21] Appl. No.: **66,936**

[22] Filed: **Jun. 25, 1987**

[51] **Int. Cl.**[4] **F16L 21/00**

[52] **U.S. Cl.** **285/138**; 285/156; 285/177; 285/179; 138/113

[58] **Field of Search** 285/133.1, 138, 156, 285/177, 179; 138/111, 112, 113

[56] **References Cited**

U.S. PATENT DOCUMENTS

2,344,424	3/1944	Singleton	285/179 X
2,475,635	7/1949	Parsons	285/133.1 X
2,650,112	8/1953	Kinkhead .	
2,756,032	7/1956	Dowell .	
2,860,311	11/1958	Balian .	
2,938,569	5/1960	Goodrich .	
3,246,917	4/1966	Martin	285/133.1 X
3,722,925	3/1973	Robbins .	
3,785,407	1/1974	Waite et al. .	
3,847,208	11/1974	Ollendorf .	
3,899,007	8/1975	Miller .	
4,095,041	6/1978	Netzel et al. .	
4,098,476	7/1978	Jutte et al. .	
4,157,194	6/1979	Takahashi	285/133.1 X
4,182,378	1/1980	Dieter .	
4,184,702	1/1980	Morris .	
4,250,927	2/1981	Newburg .	
4,250,928	2/1981	Nishikawa .	
4,280,535	7/1981	Willis .	
4,345,785	8/1982	Bradford .	
4,397,304	8/1983	Villain .	
4,400,019	8/1983	Fruck .	
4,413,733	11/1983	Dunn et al. .	
4,537,426	8/1985	Carter	285/179 X
4,573,527	3/1986	McDonough .	
4,633,913	1/1987	Carty	285/179

FOREIGN PATENT DOCUMENTS

399192	7/1924	Fed. Rep. of Germany	285/133.1
1054035	1/1967	United Kingdom	285/133.1

Primary Examiner—Dave W. Arola

Attorney, Agent, or Firm—Anthony J. Casella; Gerald E. Hespos

[57] **ABSTRACT**

A double-containment thermoplastic pipe assembly is provided to prevent against potentially hazardous spills or leaks of chemicals and the like. The double-containment pipe assembly comprises a containment pipe and at least one carrier pipe disposed therein. The carrier pipe is retained in spaced relationship to the containment pipe by support clips with outwardly extending radially aligned legs. Restraint couplings may be disposed at selected locations along the double-containment pipe assembly. The restraint couplings include a carrier portion, a containment portion and a connecting portion extending therebetween. Double-containment pipe fittings also are provided to ensure complete double-containment protection throughout an entire double-containment pipe assembly.

13 Claims, 5 Drawing Sheets

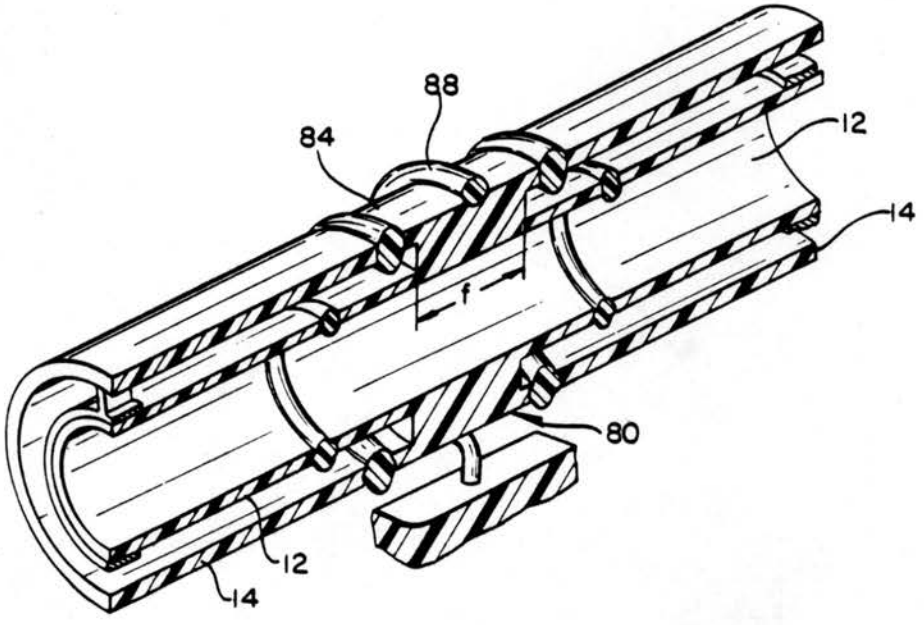

FIG.1

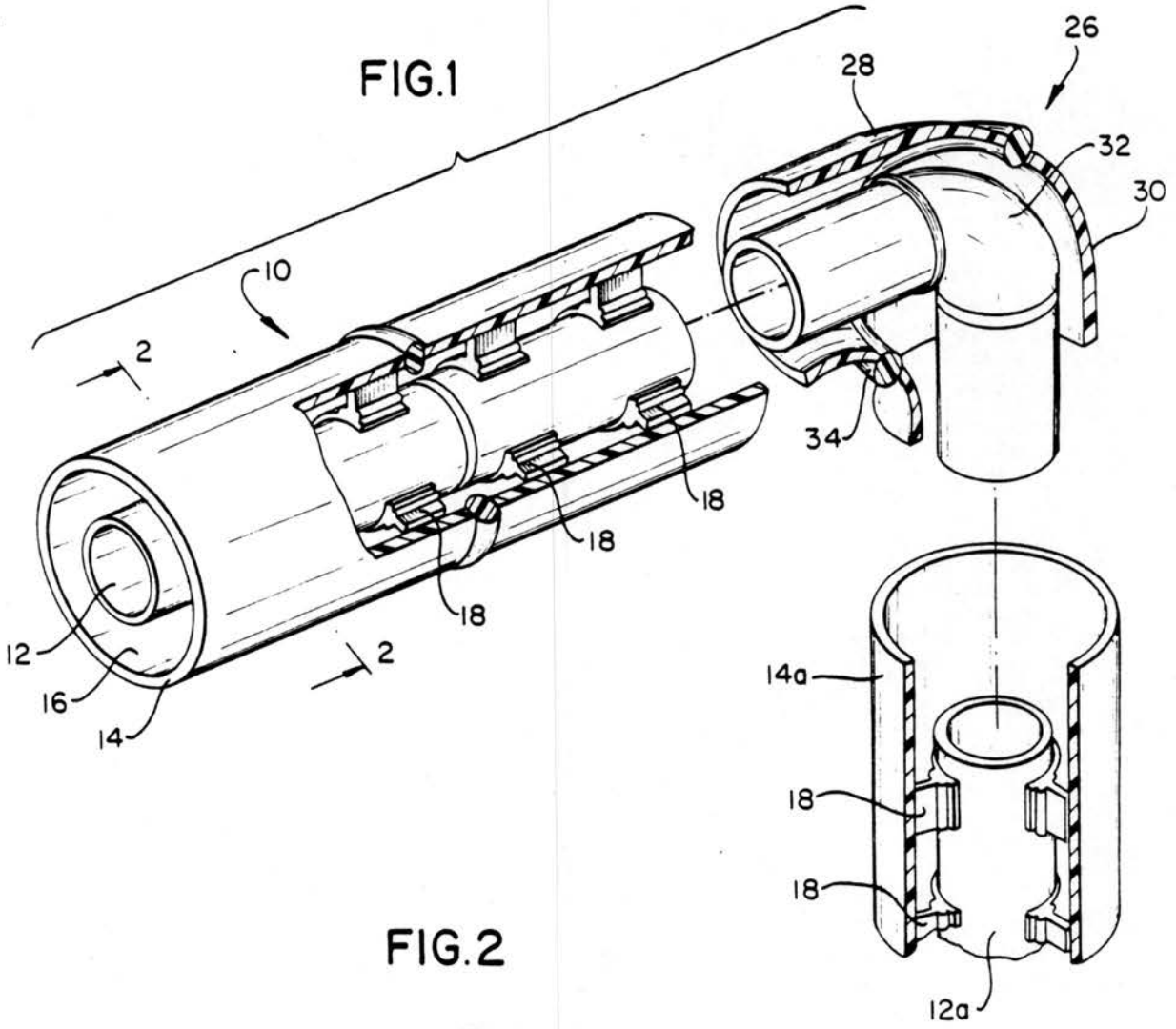
26
28
32
30
10
2
34
18
18
18
12
16
14
2
14a
18
18
12a

FIG.2

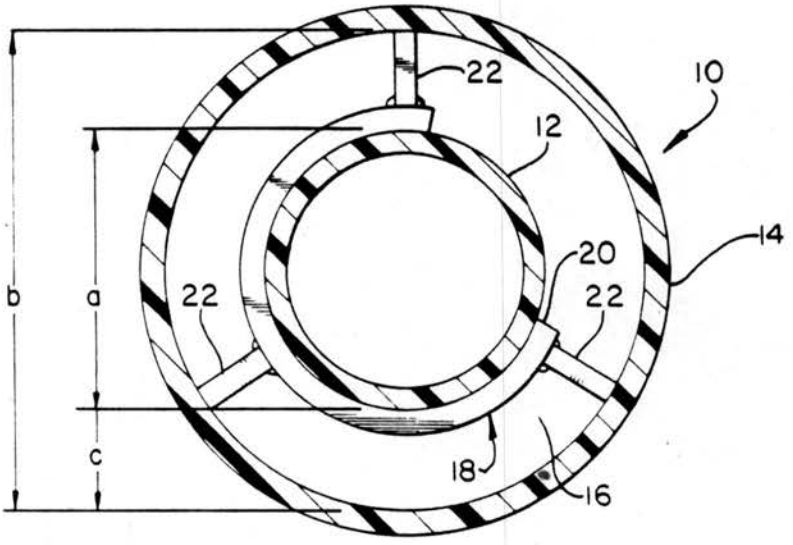
22
10
12
14
20
b
a
22
22
c
18
16

FIG.3

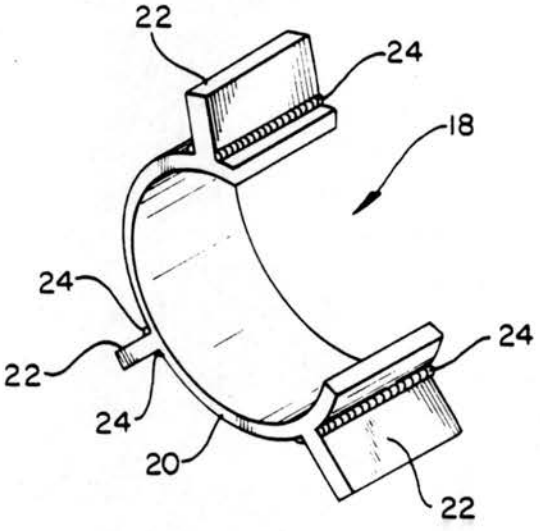

FIG.4

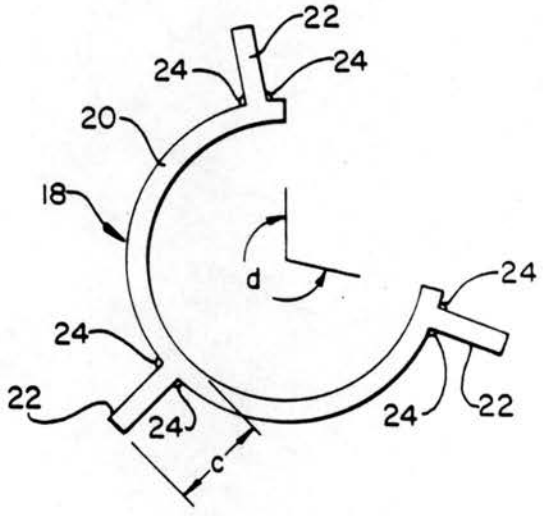

FIG.5

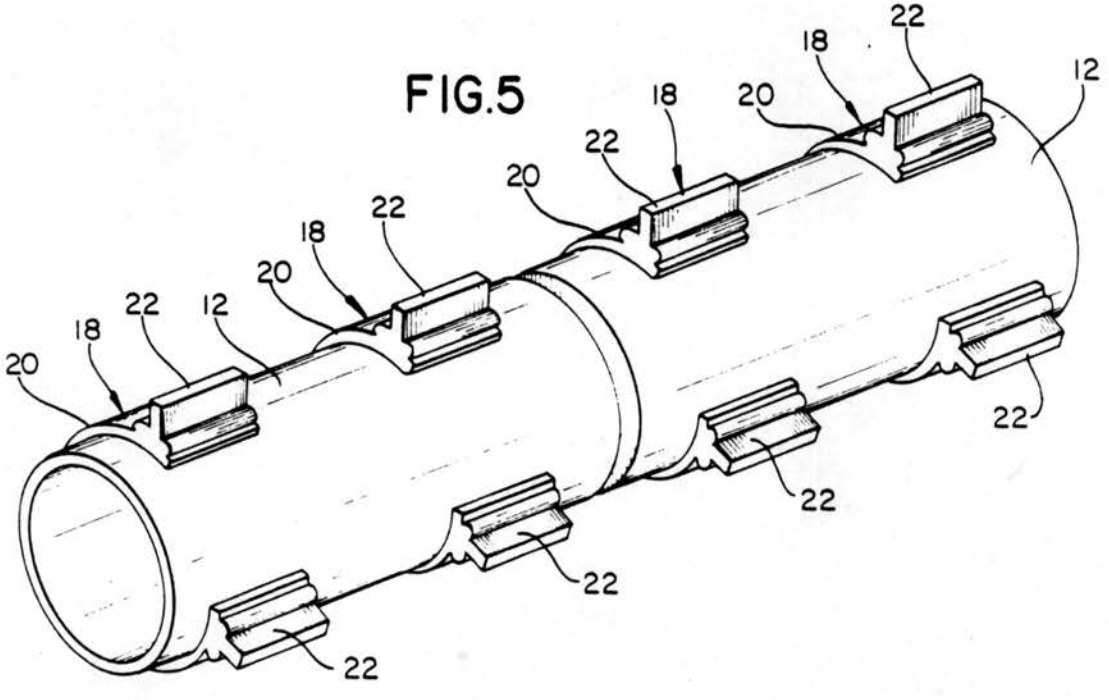

FIG.6

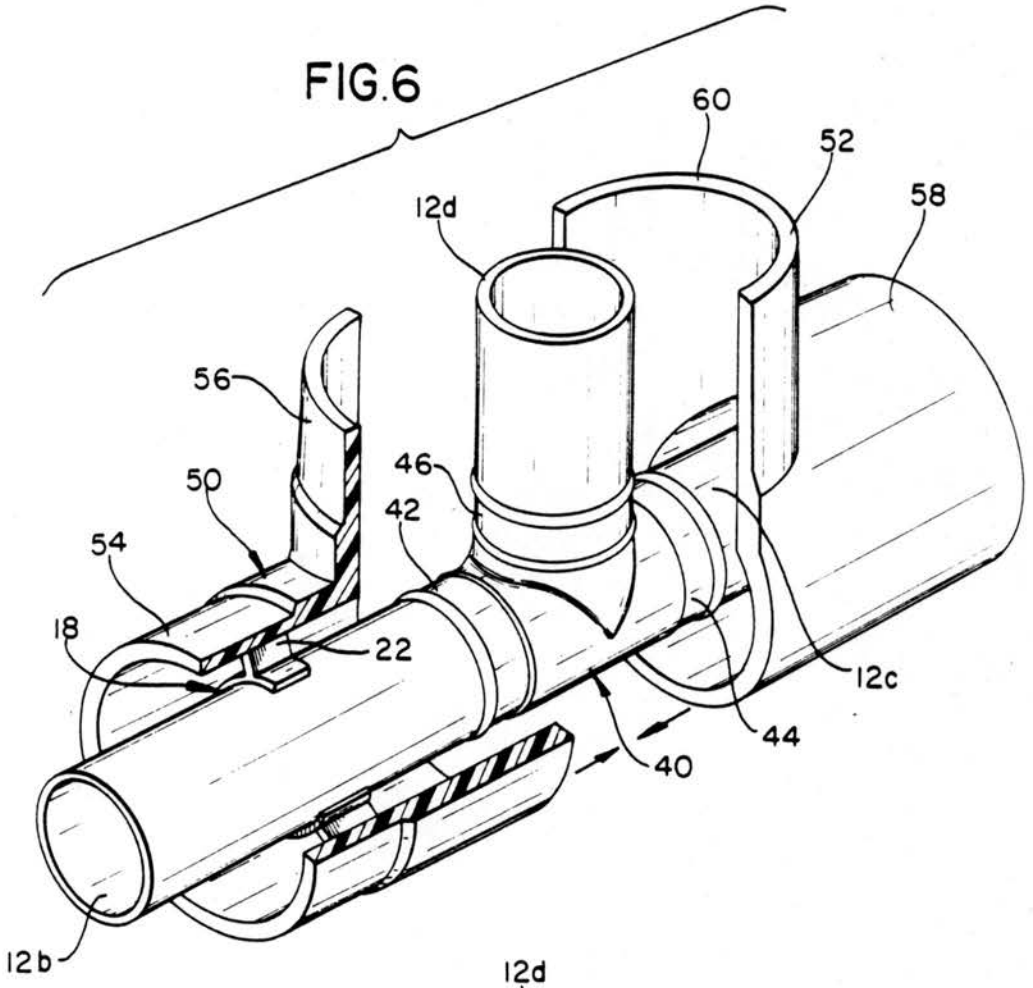
60
52
58
12d
56
50
46
42
54
18
22
12c
44
40
12b

FIG.7

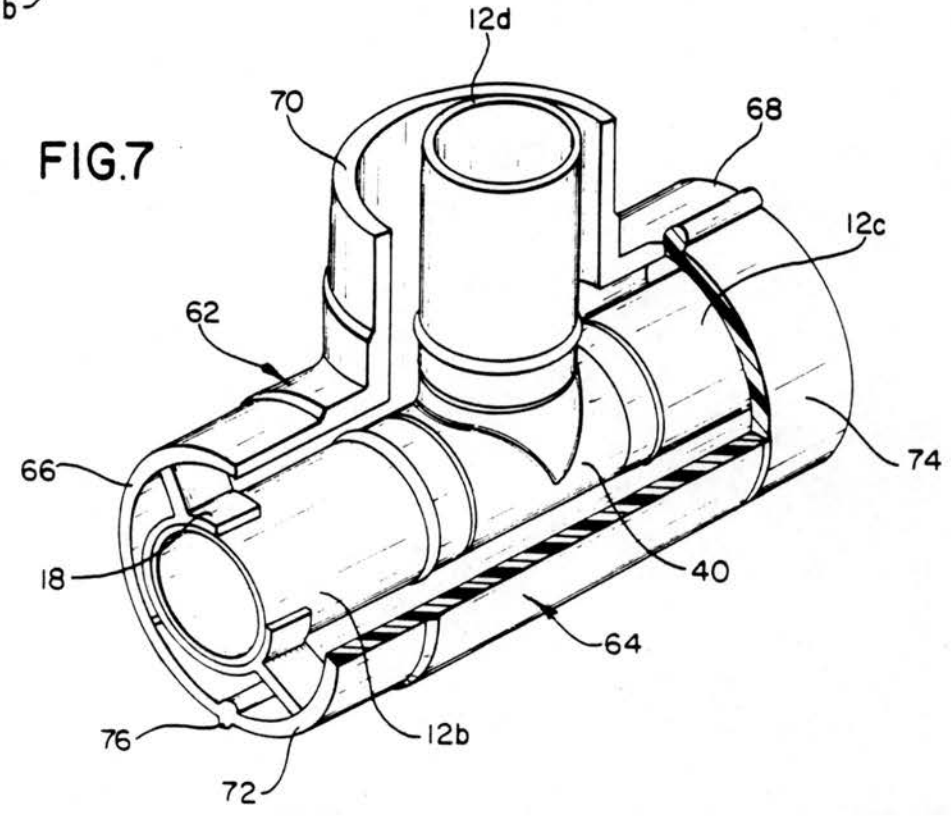
12d
70
68
12c
62
66
74
18
40
64
76
12b
72

FIG.8

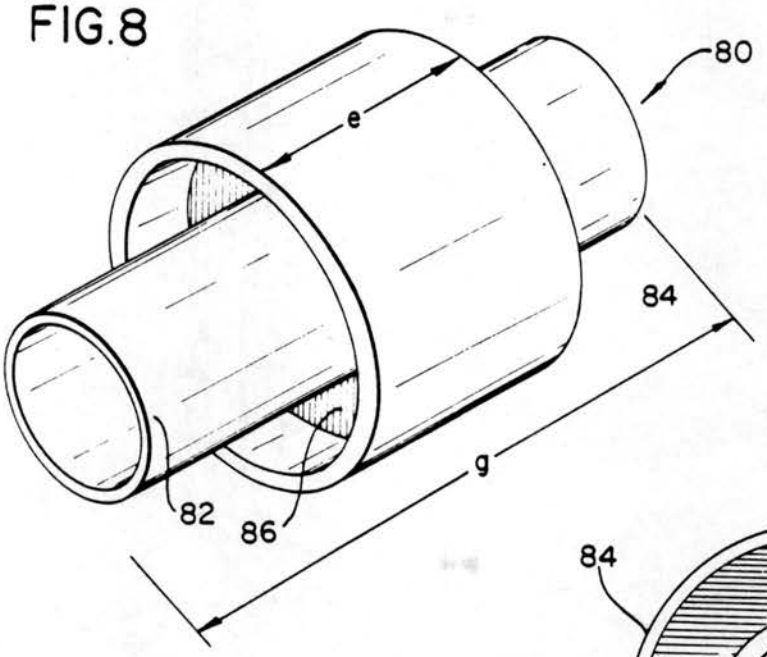

FIG.9

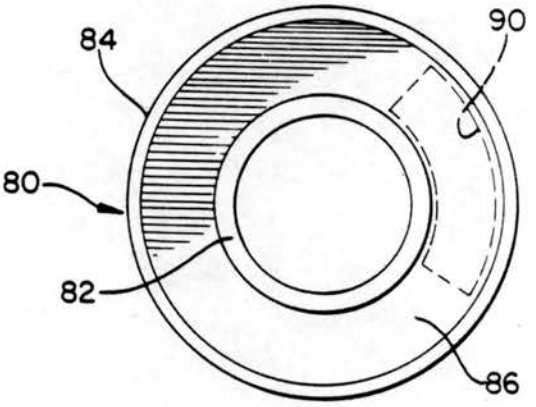

FIG.10

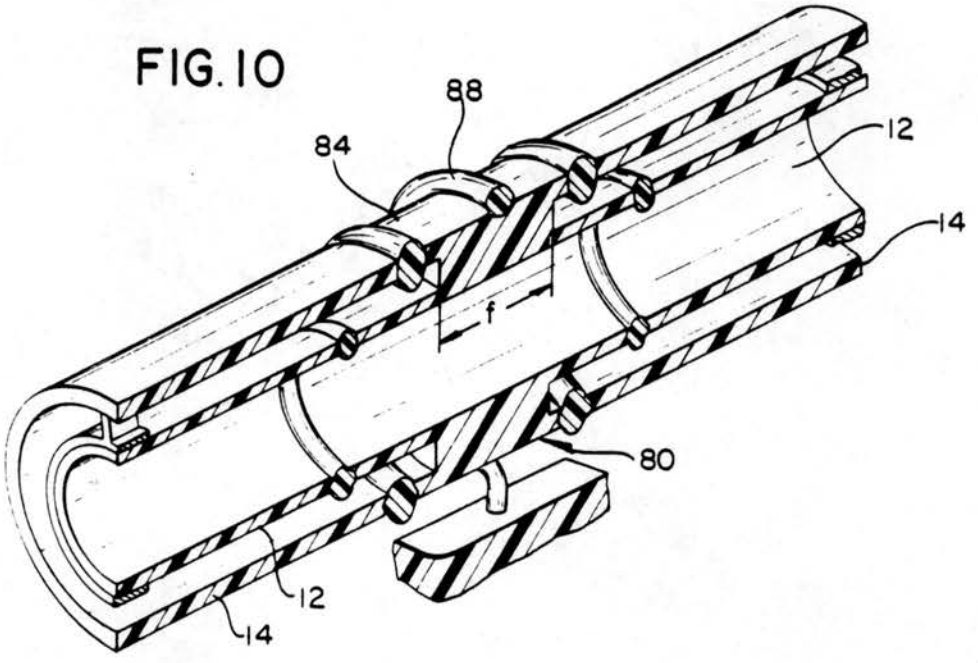

FIG. 11

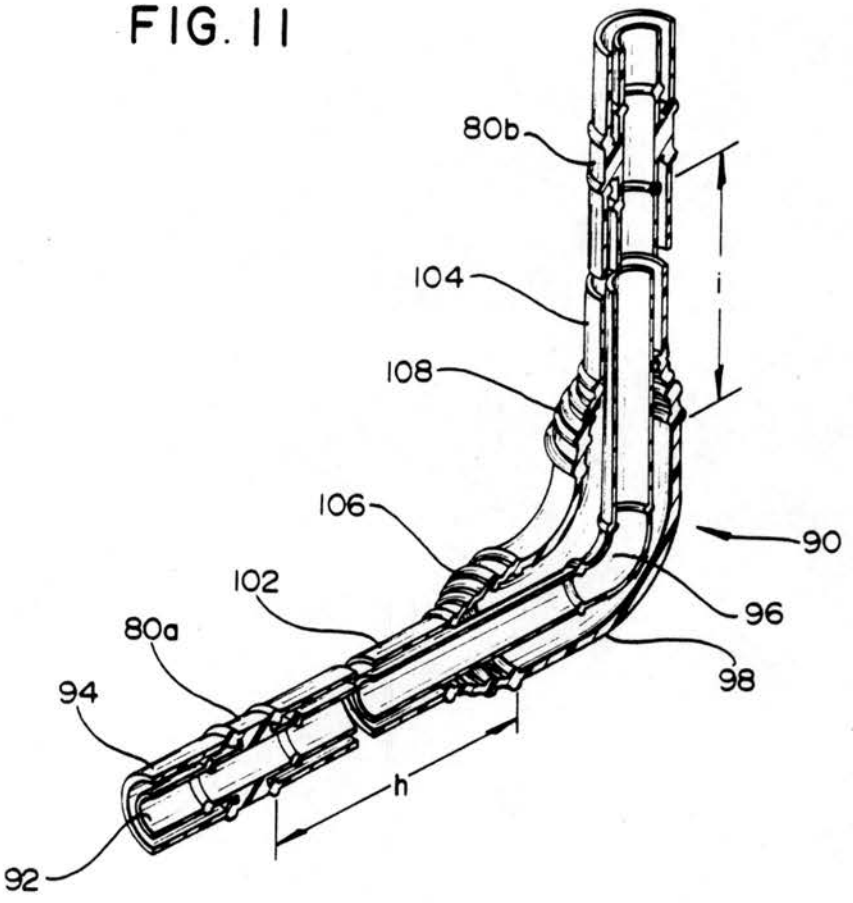
80b
104
108
106
102
80a
94
92
i
h
90
96
98

FIG. 12

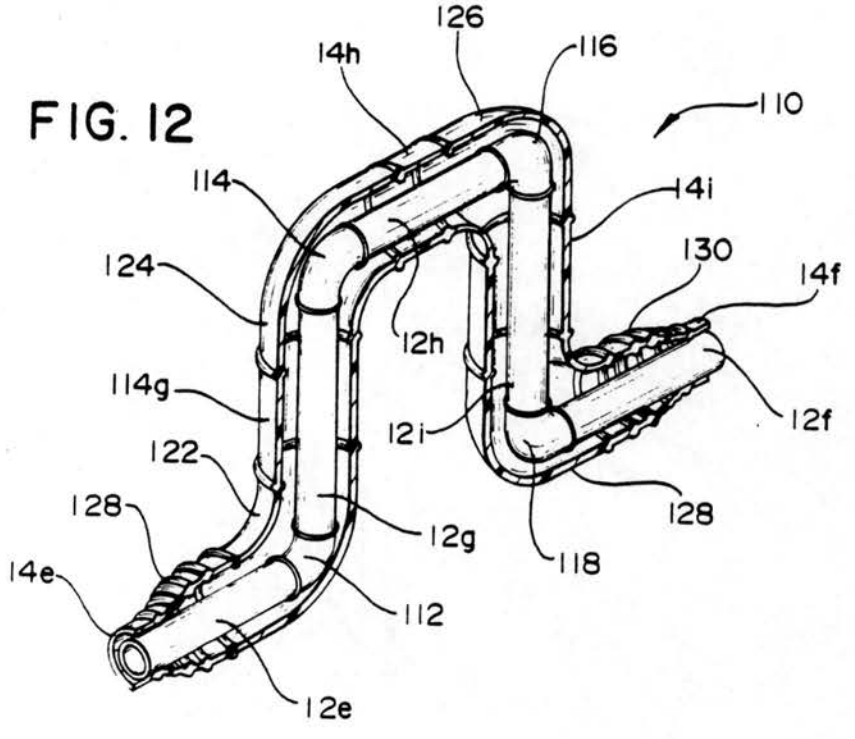
126
14h
116
110
114
141
124
130
14f
12h
114g
121
12f
122
128
12g
118
128
14e
112
12e

DOUBLE-CONTAINMENT THERMOPLASTIC PIPE ASSEMBLY

BACKGROUND OF THE INVENTION

Thermoplastic pipes and valves are widely used in the chemical and petrochemical industries because of the ability of many thermoplastics to withstand prolonged exposure to caustic chemicals. Thermoplastics also tend to be less expensive and lighter than comparable metallic pipes and valves.

The chemical industry and the public have become increasingly aware of the potentially catastrophic effects of certain chemical spills or leaks. Many jurisdictions have enacted regulations and legislation intended to enhance the safety of the chemical industry and to minimize the possibility of leaks or spills. Additionally, high insurance rates and the possibility of liability in the event of a spill or leak have encouraged the chemical industry to consider technological improvements that will reduce the possibility of a leak.

Double pipes comprising an inner fluid carrying pipe and an outer pipe have been employed to achieve many objectives. Most typically, double pipes are used for heat insulation or heat exchange. However, double pipe systems have been used to prevent leaks or spills. Certain of these systems also have included detector means between the inner and outer pipes for sensing the occurrence of a leak. The detector means typically has comprised an electronic sensor that is operative to sense the presence of an electrically conductive liquid between the inner and outer pipes and to generate an appropriate signal to indicate the existence of a leak from the inner pipe.

One double-containment pipe system for thermoplastic pipes is shown in U.S. Pat. No. 4,157,194 which issued to Takahashi on June 5, 1979. More particularly, U.S. Pat. No. 4,157,194 shows a linear outer pipe that is formed with integral inwardly extending and radially aligned support ribs. An inner pipe is concentrically disposed within the outer pipe and is dimensioned to be supported on the ribs. The assembly of double-containment thermoplastic pipes shown in U.S. Pat. No. 4,157,194 further includes fittings which enable conversion to single pipes at elbow fittings, T-connections and such. The fittings of U.S. Pat. No. 4,157,194 include a pipe segment to mate with the linear inner fluid carrying pipe of the double-containment pipe system, and a flange which effectively seals off an end of the double-containment pipe section. Thus, the system shown in U.S. Pat. No. 4,157,194 includes double-containment pipes which extend along linear sections, but which do not extend through fittings. The double-containment pipes shown in U.S. Pat. No. 4,157,194 have several substantial deficiencies. In particular, the outer pipe with the integral inwardly extending flanges is difficult and very expensive to manufacture, and prevents the use of standard "off the shelf" pipes. Second, the system shown U.S. Pat. No. 4,157,194 does not provide for double-containment systems at the fittings at which leaks are quite likely to occur.

Another system of nested pipes is disclosed in U.S. Pat. No. 4,098,476 which shows a generally frustoconical member for supporting an inner tubular member concentrically within an outer tubular member for use in a cold optics system which requires a telescope to be supported inside an evacuated housing. The frustoconical support must be slid longitudinally over the inner tubular member.

Many dual pipe systems have been developed to insulate stove pipes and such. Examples of these pipes are shown in U.S. Pat. No. 2,650,112 which issued to Kinkead on Aug. 25, 1953; U.S. Pat. No. 2,756,032 which issued to Dowell on July 24, 1956; and U.S. Pat. No. 3,847,208 which issued to Ollendorf on Nov. 12, 1974.

Other double-containment pipes are shown in U.S. Pat. No. 4,182,378 which issued to Dieter on Jan. 8, 1980 (oil pipe); U.S. Pat. No. 3,899,007 which issued to Miller on Aug. 12, 1975 (underground high temperature conduit); U.S. Pat. No. 2,860,311 which issued to Balian on Nov. 11, 1958 (wave guide); U.S. Pat. No. 4,095,041 which issued to Netzel on June 13, 1978 (gas insulated transmission line cable); U.S. Pat. No. 4,250,927 which issued to Newburg on Feb. 17, 1981 (aircraft ducts); U.S. Pat. No. 4,280,535 which issued to Willis on July 28, 1981 (drill pipe); U.S. Pat. No. 4,397,308 which issued to Villain on Aug. 9, 1983 (solar sensor) and U.S. Pat. No. 4,250,928 which issued to Nishikawa on Feb. 17, 1981.

Still other devices are known for connecting multilayer pipes. For example, U.S. Pat. No. 4,573,527 issued to McDonough on Mar. 4, 1986 and shows a complex connecting member for joining the pipes of a heat exchanger. U.S. Pat. No. 4,400,019 issued to Fruck on Aug. 23, 1983 and shows a connector for joining multilayer pipes which comprise an inner plastic pipe, an outer steel casing and a cement grout mixture therebetween. U.S. Pat. No. 4,345,785 issued to Bradford on Aug. 24, 1982 and shows a connector for an insulated pipe, while U.S. Pat. No. 4,184,702 issued to Morris on Jan. 22, 1980 and shows a connection for certain plumbing fixtures.

The extensive prior art work on double pipe systems generally does not show efficient systems for thermoplastic pipes that can be used with stock pipe items and that can be readily assembled in the field by personnel with little special training.

Accordingly, it is an object of the subject invention to provide a double-containment pipe assembly that can employ available thermoplastic pipes.

It is another object of the subject invention to provide a double-containment pipe assembly that can be readily assembled in the field to meet the demands of any particular pipe system.

A further object of the subject invention is to provide a double-containment pipe system that can provide double-containment protection through fittings.

An additional object of the subject invention is to provide a double-containment pipe system that can accommodate and control thermal expansion along the length of the pipe.

Still a further object of the subject invention is to provide a double-containment pipe system that is well suited to use with electronic sensing systems for sensing the presence of a leak.

SUMMARY OF THE INVENTION

The subject invention is directed to a double-containment pipe assembly comprising at least one outer or containment pipe and at least one carrier pipe disposed within each containment pipe and extending generally parallel thereto. A plurality of containment and carrier pipes may be secured in end to end relationship. Both the containment pipe and the carrier pipe are formed from a thermoplastic material, with the particular ther-

moplastic material being selected in accordance with the characteristics of the fluids to be carried by the double-containment pipe assembly.

The double-containment pipe assembly may further comprise at least one support means for supporting the carrier pipe in a preselected position relative to the containment pipe. The support means may be constructed to permit the passage of electronic sensing means between the containment and carrier pipes for sensing the presence of a liquid therebetween. The support means may comprise a generally planar support member having one or more apertures extending therethrough with each aperture being dimensioned to receive a carrier pipe. The external dimensions of the planar support member may be selected to permit the planar support member to be disposed within the containment pipe and generally orthogonal to the longitudinal axis of the containment pipe. The planar support member may be dimensioned to contact the inner circumferential surface of the containment pipe. The planar support member preferably also is formed from a thermoplastic material.

The support means may alternatively comprise a generally arcuate mounting member and a plurality of generally radially extending support legs. The arcuate mounting member may be dimensioned to at least partly surround the carrier pipe. Thus, the inside diameter defined by the arcuate mounting member may substantially equal the outside diameter of the carrier pipe about which the arcuate mounting member will be positioned. The arcuate mounting member may extend through an arc of between approximately 180° and 360°, and preferably extends through an arc of approximately 270°. The arcuate mounting member preferably is formed from a thermoplastic material that is dimensioned and formed to exhibit a resiliency. Thus, the arcuate support member may be slidably advanced along the length of the containment pipe, or preferably may be resiliently snapped over the containment pipe. The arcuate mounting member may be retained on the carrier pipe by the frictional interfit therebetween. Alternatively, the arcuate mounting member may be fused or welded to the carrier pipe.

The support legs of the support means may be rigidly connected to the arcuate mounting member and extend generally radially therefrom. Preferably, at least three support legs are mounted to and extend generally radially from the arcuate mounting member. The support legs may be dimensioned to enable the mounting of the carrier pipe substantially concentrically within the containment pipe.

The double-containment pipe assembly may further comprise restraint couplings to permit the generally end to end joining of a pair of carrier pipes and a corresponding pair of containment pipes, while also controlling thermal expansion. The restraint coupling may comprise a carrier pipe portion and a containment pipe portion joined to one another. The restraint coupling may be of unitary construction with the respective carrier and containment pipe portions thereof having substantially identical cross-sectional dimensions as the carrier and containment pipes to which the restraint coupling will be joined. The connection between the carrier and containment pipe portions of the restraint coupling may be substantially continuous entirely around the restraint coupling thereby creating longitudinal containment sections between adjacent restraint couplings. Alternatively, however, one or more cutouts may be provided between the carrier and containment pipe portions of the restraint coupling to permit the passage of detection means through the restraint coupling.

The restraint coupling may be physically secured to external support means for preventing or controlling thermal expansion. More particularly, thermal expansion is much more likely to occur along the carrier pipe. If thermal expansion was allowed to occur over very long lengths of the carrier pipe, it is possible that dimensional changes of the carrier pipe could cause the carrier pipe to buckle sufficiently to contact the inner surface of the containment pipe at some point along the length of the assembly. The forces generated by such buckling or by the resulting contact could damage the pipes. Periodically disposed restraint couplings will positively connect the carrier pipe to the containment pipe at selected locations along the length of the assembly. Thus, the thermal expansion of the carrier pipe will be controlled by the periodic positive connection to the containment pipe at the restraint couplings.

The double-containment pipe system preferably extends through fittings such as elbows and T-connections. In certain situations, the dimensions of the carrier and containment pipes will enable the elbow fitting of the containment pipe to merely be placed over the elbow fitting of the carrier pipe. However, in embodiments where the diameter of the containment pipe is only slightly larger than the diameter of the carrier pipe, the containment pipe elbow fittings comprise a plurality of members, each of which extends through an angular bend smaller than the angular bend of the carrier pipe. These various members of the containment pipe elbow fitting may be joined to one another sequentially in end to end relationship around the elbow fitting of the carrier pipe. Thus, two short 45° containment pipe fitting members disposed in end to end relationship may be required to enclose a single 90° elbow fitting for the carrier pipe.

Containment pipe T-fittings also are formed from a plurality of separate members. More particularly, the containment pipe T-fitting members comprise T-fitting halves which may be substantially symmetrical with one another. The containment T-fitting halves may be matable along a plane extending substantially orthogonal to the two runs of the T-fitting and cutting the branch of the T-fitting substantially longitudinally in half. In still another alternative, the halves of the T-fitting of the containment pipe may be matable along a plane extending longitudinally with respect to both runs and the branch.

The dimensions of the containment pipe may be greater at fittings than at longitudinal sections. More particularly, the dimensions of the containment pipe at fittings will be selected in accordance with anticipated thermal expansion characteristics of the carrier pipe to ensure that the carrier pipe does not buckle against the containment pipe fittings with the resulting possibility of damage to the carrier or containment pipe. Additionally, the location of the restraint couplings may be carefully selected with respect to the fittings to carefully control thermal expansion both in longitudinal sections adjacent to the fittings and in the fittings. The above described fittings may further be employed in end to end relationship with short longitudinal sections to create expansion loops to further control thermal expansion.

BRIEF DESCRIPTION OF THE DRAWINGS

FIG. 1 is a perspective view, partly in section, of a double-containment pipe assembly including an elbow fitting.

FIG. 2 is a cross-sectional view of a double-containment pipe taken along line 5—5 in FIG. 4.

FIG. 3 is a perspective view of the support clip of the subject invention.

FIG. 4 is an end view of the support clip shown in FIG. 1.

FIG. 5 is a perspective view of a length of carrier pipe with support clips mounted thereon.

FIG. 6 is a perspective view of two halves of a T-fitting.

FIG. 7 is a perspective view of an alternate T-fitting.

FIG. 8 is a perspective view of a restraint coupling.

FIG. 9 is an end view of the restraint coupling shown in FIG. 8.

FIG. 10 is a cross-sectional view of a restraint coupling incorporated into a double-containment pipe system.

FIG. 11 is a cross-sectional view of a double-containment pipe assembly with both a T-fitting and restraint couplings.

FIG. 12 is a cross-sectional view of double-containment pipe assembly expansion loop.

DETAILED DESCRIPTION OF THE PREFERRED EMBODIMENTS

The double-containment pipe assembly of the subject invention is illustrated in FIGS. 1 and 2 and is identified generally by the numeral 10. The double-containment pipe assembly 10 comprises at least one inner carrier pipe 12 and at least one outer containment pipe 14. The carrier pipes 12 are secured in end to end relationship and are employed to carry a fluid which may be a hazardous chemical. The containment pipes 14 also are secured in end to end relationship and surround and enclose the carrier pipes 12 to provide protection against a potentially catastrophic leak or spill from the carrier pipe 12.

Both the carrier pipe 12 and the containment pipe 14 are formed from a thermoplastic material. The particular type of thermoplastic material will depend upon the characteristics of the chemicals being transported in the carrier pipe and on the required performance characteristics for the containment pipe. In most situations, the carrier pipe 12 and the containment pipe 14 may be formed from either a copolymer polypropylene or a polyvinylidene fluoride (PVDF).

The outside diameter of the carrier pipe 12, as indicated by dimension "a" in FIG. 2, is less than the inside diameter of the containment pipe 14 as indicated by dimension "b". As a result, an annular space 16 is defined between the carrier pipe 12 and the containment pipe 14. The radial dimension "c" of the annular space 16 will depend in part upon system specifications, including the temperatures of the fluids to be carried through the carrier pipe 12. Additionally, the radial dimension "c" of the annular space 16 may vary at certain locations throughout a double-containment pipe system, and in particular in the vicinity of fittings which achieve a change in direction of the double-containment pipe assembly 10. This aspect of the invention is described and illustrated in greater detail below.

The carrier pipe 12 is held in generally concentric relationship to the containment pipe 14 by a support clip 18 which is further illustrated in FIGS. 3–5. More particularly, the support clip 18 comprises an arcuate mounting portion 20 which extends through a substantially cylindrical arc of approximately 260°–280°, and preferably 270°, as illustrated by angle "d" in FIG. 4. The inside diameter of the mounting portion 20 substantially equals the outside diameter "a" of the carrier pipe 12. Additionally, the mounting portion 20 of the support clip 18 is formed from a resilient material to permit the mounting portion 20 to be opened sufficiently to pass over the carrier pipe 12, and then to be released and biasingly retained on the carrier pipe 12.

The support clip 18 further comprises a plurality of support legs 22 which extend rigidly from the mounting portion 20 in generally radial directions and are spaced from one another by about 120°. As illustrated in FIGS. 1–5, the support legs 22 are joined to the mounting member 20 by generally longitudinally extending fillets 24 which define a bead of weldment applied using known thermoplastic welding techniques. Alternatively, the entire support clip 18 including the mounting portion 20 and the support legs 22 may be molded as a unitary member as shown in the other figures hereto. Preferably, the support clip 18 is formed from the same thermoplastic material as the carrier pipe 12 to facilitate the welding of the support clip 18 to the carrier pipe 12.

The radial dimension of the support clip 18, defined by the radial dimension of the support leg 22 plus the radial thickness of the mounting member 20 substantially equals or is slightly less than the radial dimension "c" of the annular gap between the carrier pipe 12 and the containment pipe 14. As a result, as shown most clearly in FIG. 2, the support clip 18 will hold the carrier pipe 12 in generally concentric relationship relative to the containment pipe 14. However, as shown in FIGS. 1 and 2, the annular space 16 between the carrier pipe 12 and the containment pipe 14 will permit the longitudinal passage of sensing means, such as a cable with the ability to detect and locate the presence of a conductive fluid in the annular space 16 between the carrier pipe 12 and the containment pipe 14.

As shown in FIG. 1, the containment pipe assembly 10 may extend through fittings such as the elbow fitting 26. As illustrated in FIG. 1, the elbow fitting 26 is provided for situations where it is anticipated that the fluid transported through the carrier pipe 12 will not be at a substantially elevated temperature, and therefore will not cause the carrier pipe 12 to thermally expand relative to the containment pipe 14. In view of these system specifications, it is unnecessary for the containment pipe to be substantially enlarged in the vicinity of the elbow connection 26. As a result, depending upon the magnitude and differences between the outside diameter "a" of the carrier pipe 12 and the inside diameter "b" of the containment pipe 14, it may be necessary to form the double-containment 90° elbow 26 from two 45° containment pipe portions 28 and 30 respectively. The single 90° elbow fitting 32 for the carrier pipe then can readily be fit into the 45° containment pipe elbow portion 28, and the second 45° containment pipe portion 30 then can be fit over the 90° carrier pipe elbow 32 and welded to the first 45° containment pipe portion 28 by weldment 34. A second double-containment pipe assembly comprising a carrier pipe 12*a* and a containment pipe 14*a* then can be connected in end to end relationship to the double-containment 90° elbow assembly 26 as shown in FIG. 1.

On each side of the double-containment 90° elbow assembly **26**, the respective carrier pipe portions **12** and **32** may be fused to one another prior to the connection of the containment pipes. This preferred order of connection is achieved by having longitudinally offset ends, and enables a positive visual inspection of the butt fusion of the carrier pipe. The containment pipe **14** then is connected to the containment pipe 45° bend portion **28**. In certain situations, as explained further below, it will be necessary to achieve the butt fusion of the carrier and containment pipes simultaneously. In these situations, the ends of the carrier and containment pipes will be substantially in line with one another rather than the offset configuration referred to previously.

Two optional arrangements for T-fittings are shown in FIGS. **6** and **7** respectively. More particularly, a T-fitting of a containment pipe must be assembled around the T-fitting for the carrier pipe. As shown in FIG. **6**, the T-fitting for the carrier pipe is identified generally by the numeral **40**. The carrier pipe T-fitting **40** is of generally standard unitary construction, and includes a pair of aligned runs **42** and **44** and a branch **46** perpendicular to the runs **42** and **44**. The carrier pipe T-fitting **40** may be connected to carrier pipes **12*b***, **12*c*** and **12*d*** by butt fusion or other similar attachment techniques. Support clips **18** with appropriately dimensioned support legs **22** are then snapped onto the carrier pipes as explained previously.

The containment pipe T-fitting shown in FIG. **6** is formed from containment pipe T-fitting halves **50** and **52** respectively. The containment T-fitting half **50** includes a cylindrical run portion **54** and a semicylindrical branch portion **56**. Similarly, the containment pipe T-fitting half **52** includes a cylindrical run portion **58** and a semicylindrical branch portion **60**. The T-fitting halves **50** and **52** may be welded to one another and around the carrier pipe T-fitting **40**. The assembled combination of the carrier pipe T-fitting **40** and the welded containment pipe T-fitting halves **50** and **52** may then be joined to adjacent linear sections of carrier and containment pipe. To enable this connection, it is necessary that the carrier pipe portion **40** of the T-fitting extend to or beyond the containment pipe portion thereof. More particularly, the carrier pipe **12*c*** has a length sufficient to put its end substantially in line with the end of the run **58** on the containment pipe T-fitting half **52**. Similarly, the carrier pipe **12*b*** is dimensioned to extend to or beyond the run portion **54** of the containment pipe T-fitting half **50**.

FIG. **7** shows an alternate construction for a double-containment T-fitting. More particularly, the carrier pipe T-fitting **40** is substantially identical to the carrier pipe T-fitting described above and illustrated in FIG. **6**. Additionally, the carrier pipe T-fitting **40** is joined to carrier pipe sections **12*b***, **12*c*** and **12*d*** as explained above. The containment pipe T-fitting, however, shown in FIG. **7** comprises containment pipe T-fitting halves **62** and **64** which are formed to be joined to one another along a plane extending substantially longitudinally through both the runs and the branch of the T-fitting. Thus, the containment pipe T-fitting half **62** includes semicylindrical run portions **66** and **68** and semicylindrical branch portion **70**. Similarly, the containment pipe T-fitting half **64** includes semicylindrical run portions **72** and **74** and a semicylindrical branch portion (not shown). The containment pipe T-fitting halves **62** and **64** are joined to one another by welding as indicated generally by the numeral **76**.

The double-containment pipe assembly further comprises restraint coupling **80** as shown in FIGS. **8–10**. More particularly, the restraint coupling **80** comprises a carrier portion **82**, a containment portion **84** and a connecting portion **86** extending therebetween. As shown most clearly in FIG. **10**, the restraint coupling **80** is of substantially unitary construction and is formed from the same thermoplastic material as the carrier and containment pipes **12** and **14** with which it is employed. Additionally, the diameter of the containment portion **84** of the restraint coupling **80** substantially equals the diameter of the containment pipe **14** to which the restraint coupling **80** is joined. Similarly, the diameter of the carrier portion **82** is substantially equal to the diameter of the carrier pipe **12** with which the restraint coupling **80** is used. Furthermore, the relative position of the carrier portion **82** relative to the containment portion **84** is substantially identical to the relative positions of the carrier and containment pipes **12** and **14**. Thus, for the embodiment illustrated in FIG. **10**, the carrier portion **82** of the restraint coupling **80** is substantially concentric with respect to the containment portion **84** thereof to enable precise mating with concentrically disposed carrier and containment pipes **12** and **14**. In other embodiments, however, an eccentric orientation may be desirable or necessary to mate with a specified eccentric orientation of the carrier and containment pipes **12** and **14**. Additionally, in other embodiments, a plurality of carrier pipes may be incorporated into a single containment pipe, and the restraint coupling used therewith will include a plurality of carrier portions.

The function of the restraint coupling **80** is to control differential thermal expansion between the carrier and containment pipes. More particularly, with reference to FIG. **10**, the connecting portion **86** which joins the carrier and containment portions **82** and **84** positively controls and localizes relative movement between the carrier and containment pipes **12**, **12*a*** and **14**, **14*a***. Thus, a clamp means illustrated generally by the numeral **88** in FIG. **10** may be affixed to the containment portion **84** of the restraint coupling **80** to positively control and localize the inevitable thermal expansion between the carrier and containment pipes **12** and **14** of the double-containment pipe assembly. As will be explained further below, the simple restraint coupling **80** can be employed in combination with the fittings described above to enable the double-containment pipe system to be carried through portions of a system in which fittings are disposed, without the risk of damage occurring at the fittings as a result of differential expansion.

As shown in FIGS. **8** and **10** respectively, the containment portion **84** of the restraint coupling **80** has a longitudinal length "e" which is greater than the longitudinal length "f" of the connecting portion **86**. By providing the containment portion **84** with a length "e" that is greater than the length "f" of the connecting portion, the containment portion **84** can readily be butt fused in end to end relationship to an adjacent containment pipe **14** as shown most clearly in FIG. **10**. Preferably, the containment portion **84** of the restraint coupling **80** will extend beyond the connecting portion **86** at least one-half inch to ensure the presence of a sufficient amount of thermoplastic material to be melted during the butt fusion process.

In a similar manner, the carrier portion **82** has a longitudinal length "g" which also is greater than the length "f" of the connecting portion **86** to facilitate the butt fusion of the carrier portion **82** to an adjacent carrier

pipe 12 in end to end relationship as shown in FIG. 10. In the preferred embodiment, the length of the carrier portion 82 of the restraint coupling 80 exceeds the length "e" of the containment portion 84 thereof. This greater length of the carrier portion 82 enables the butt fusion of the carrier portion 82 to the carrier pipe 12 to be carried out first with the completed weld being entirely visible for inspection. The containment pipe 14 then is slid over both the carrier pipe 12 and the supports 18 and is butt fused to the containment portion 84 of the restraint coupling 80, with that entire weld being readily visible for inspection. In certain embodiments, however, the carrier portion 82 cannot extend beyond the containment portion 84 on both ends of the restraint coupling 80. In particular, the system may be assembled such that both the carrier and containment pipes to which the restraint coupling 80 will be joined are already in place on at least one side of the specified location of the restraint coupling 80. In these situations, the carrier and containment pipes to which the restraint coupling 80 will be joined terminate in line with one another, and the carrier and containment portions 82 and 84 of the restraint coupling 80 must also terminate in line with one another on one end of the restraint coupling 80. Thus, for these embodiments, the carrier and containment portions 82 and 84 of the restraint coupling 80 may be butt fused simultaneously in end to end relationship to the respective carrier and containment pipes. Even in these situations, however, the carrier and containment portions 82 and 84 will extend beyond the connecting portion 86 to ensure the presence of sufficient material to be partly melted during the butt fusion welding process.

As noted above, the primary function of the restraint coupling 80 is to control differential thermal expansion that typically will occur when hot fluids pass through the carrier pipe 12. More particularly, hot fluids may cause the carrier pipe 12 to expand substantially, while the annular air gap 16 will substantially prevent the heat from affecting the containment pipe 14. The substantial thermal expansion of the carrier pipe 12 can cause the carrier pipe 12 to buckle relative to the containment pipe 14, thereby causing contact between the carrier and containment pipes 12 and 14, or by causing substantial forces between the support arms 22 and the containment pipe 14 in areas of maximum buckling. Additionally, differential thermal expansion is particularly likely to cause a potentially damaging contact between the containment and carrier pipes at fittings such as elbows as shown in FIG. 1 herein and T-fittings as shown in FIG. 6 and 7 herein. The restraint coupling 80 enables a clamp means 88 to be mounted to the containment portion 84 of the restraint coupling 80 and to simultaneously hold both the containment portion 84 and the carrier portion 82 in a fixed longitudinal position relative to one another. As a result, the differential expansion can be controlled to locations intermediate adjacent restraint couplings 80 along the length of the double containment pipe system. The spacing between restraint couplings 80 will be selected in accordance with system temperature and other parameters to ensure that damaging contact is avoided.

In certain embodiments, it will be desirable to isolate longitudinal sections of the annular space 16 between the carrier pipe 12 and the containment pipe 14. In other embodiments, however, it may be desirable or necessary to provide communication along an extended longitudinal portion of the annular space 16, such as in those double-containment pipe systems which employ a continuously extending sensing means through the annular space 16. In embodiments where it is necessary or desirable to isolate portions of the annular space 16, the connecting portion 86 of the restraint couplings 80 will be substantially solid. However, in embodiments where it is necessary or desirable to provide communication between successive annular spaces 16, apertures, such as the aperture 90 shown in broken lines in FIG. 9, may be provided extending the entire longitudinal distance through the connecting portion 86. A plurality of such apertures 90 may be provided at spaced locations around the connecting portion 86.

As noted above, it is particularly important to control differential thermal expansion in the vicinity of fittings that change the direction of the double containment pipe system. FIG. 11 will be referred to to explain two possible installation approaches for controlling differential expansion in the vicinity of a 90° elbow fitting. In particular, FIG. 11 shows a section of a double-containment pipe system which includes a carrier pipe identified generally by the numeral 92 and a containment pipe identified generally by the numeral 94. The carrier pipe 92 includes a 90° elbow fitting 96. Similarly, the containment pipe 94 includes a 90° elbow fitting 98 which surrounds the carrier elbow fitting 96. The system 90 shown in FIG. 11 further includes restraint couplings 80*a* and 80*b* disposed on opposite sides of the elbow fittings 96 and 98. Thermal expansion of the carrier pipe 92 in the vicinity of the elbow fittings 96 and 98 can be controlled by locating the restraint couplings 80*a* and 80*b* at small distances "h" and "i" respectively from the elbow fittings 96 and 98. As a result, the thermal expansion of the longitudinal sections of the carrier pipe 92 will effectively be directed away from the elbow fitting 96. The small amount of thermal expansion that is likely to take place between the restraint couplings 80*a* and 80*b* can be controlled so as not too exceed the tolerances within the containment elbow 98 if the distances "h" and "i" are small.

In certain instances, it may not be possible or desirable to direct all thermal expansion away from the elbow fittings. In these situations, the distances "h" and "i" as shown in FIG. 11 may be greater, and the thermal expansion may be accommodated within the containment elbow fitting 98. To accommodate such thermal expansion, the containment elbow fitting 98 is provided with a larger diameter than the containment pipe 94 elsewhere in the system. Additionally, the connections between the containment elbow 98 and the linear containment pipe segments 102 and 104 is achieved with concentric reducers 106 and 108 respectively. More particularly, the concentric reducers 106 and 108 have a frustoconical configuration wherein the large diameter end is matable with the containment elbow 98 and wherein the small diameter end is matable with the containment pipes 102 and 104 respectively. This installation approach, however, requires careful selection of the dimensions of the containment elbow 90 and careful placement of the support clips 18 relative to the carrier pipe elbow 96. More particularly, the size required for the containment elbow 98 can readily be determined by calculating the amount of thermal growth between the restraint couplings 80*a* and 80*b* based on the knowledge of anticipated temperature levels and the thermal coefficients of expansion for the particular thermoplastic material used in the system. The minimum required distance of the support clip 14 to the carrier elbow 96

can be calculated using known equations which account for the amount of thermal growth, the modulus of elasticity of the carrier pipe **92**, the outside diameter of the carrier pipe **92** and the working stress at system temperature (PSI).

Another approach for accommodating thermal expansion employs a double-containment expansion loop identified generally by the numeral **110** in FIG. **12** and is incorporated into a double-containment system comprising carrier pipes **12***e* and **12***f* and containment pipes **14***e* and **14***f*. The double-containment expansion loop **110** includes four carrier elbows **112–118** and four containment elbows **122–128**. The carrier elbows **112–118** all are disposed in series between carrier pipes **12***e* and **12***f* and are joined by linear carrier pipe sections **12***g*, **12***h* and **12***i*. The cross-sectional dimensions of the carrier pipes **12***e*–**12***i* and carrier elbows **112–118** are substantially equal. The containment elbows **122–128** also are connected in series by generally linear containment pipe sections **14***g*, **14***h* and **14***i*. However, the containment elbows **122–128** and the containment pipe sections **14***g*–**14***i* all have cross-sectional dimensions which exceed the diameter of the containment pipes **14***e* and **14***f* to accommodate the thermal expansion of the carrier pipe. To achieve this greater dimension of the containment portion, the double-containment expansion loop **110** includes reducers **130** and **132** which are substantially identical to the reducers **106** and **108** described above and illustrated in FIG. **11**. The relative differences in the diameters of the carrier and containment pipes required through the double-containment expansion loop **110** can readily be determined by knowing the temperature of the fluid to be carried in the carrier pipe, the distance between the expansion loop **110** and the adjacent restraint couplings (not shown) and the thermal expansion characteristics of the thermoplastic material being employed. Similarly, the length of the various legs of the expansion loop can readily be calculated based on the known equations described above.

In summary, the double-containment pipe system of the subject invention is formed entirely from thermoplastic materials and provides exceptional protection against leaks or spills both on longitudinal sections and at fittings. Additionally, the double-containment pipe assembly of the subject invention is uniquely constructed to properly position the carrier pipe within the containment pipe and to carefully control thermal expansion. The double-containment pipe assembly comprises support clips that can be snapped into engagement with the carrier pipe and that support the carrier pipe in spaced relationship to the containment pipe. Restraint couplings are provided to control thermal expansion of the double-containment pipe assembly. The restraint coupling comprises a carrier pipe portion, a containment pipe and a connecting portion therebetween. The carrier and containment pipe portions preferably have a greater longitudinal dimension than the connecting portion. The restraint couplings can be placed at spaced apart locations along the double-containment pipe assembly and can be anchored to an external location to carefully control differential expansion. Certain containment elbows may be of a larger cross-sectional dimension than the adjacent linear containment pipes with the connections therebetween being accommodated by frustoconical reducers. The dimension of the containment elbow is selected to accommodate differential expansion that may occur between the elbow fitting and the nearest restraint coupling. Double-containment expansion loops may also be provided to accommodate thermal expansion and prevent direct and potentially damaging contact between the containment and the carrier pipe.

While the invention has been described with respect to certain preferred embodiments, it is apparent that various changes can be made without departing from the scope of the invention as defined by the appended claims.

What is claimed is:

1. A double-containment thermoplastic pipe assembly comprising:

a plurality of substantially linear containment pipe sections secured to one another in end to end relationship;

at least one substantially linear array of carrier pipes desposed within said containment pipes, said array of carrier pipes comprising a plurality of substantially linear carrier pipe sections secured in end to end relationship;

a plurality of spaced apart support means disposed intermediate said carrier and containment pipes for keeping said carrier pipe in spaced generally parallel relationship to said containment pipe, each said support means comprising a generally arcuate mounting means extending through an arc of less than 360° for partly surrounding and engaging said carrier pipe and means extending outwardly from said mounting means and into supporting contact with said containment pipe; and

a plurality of spaced apart restraint couplings, each said restraint coupling comprising at least one carrier pipe portion and a containment pipe portion disposed respectively to be secured in end to end relationship with corresponding carrier and containment pipes, each said restraint coupling further comprising a connecting portion rigidly joining the carrier and containment portions thereof.

2. A double-containment thermoplastic pipe assembly as in claim **1** further comprising at least one nonlinear fitting, said fitting comprising a containment portion and a carrier portion disposed within said containment portion, said carrier and containment portions of said fitting being secured in end to end relationship respectively with at least one of the linear sections of carrier and containment pipes.

3. A double-containment pipe assembly as in claim **2** wherein the fitting comprises carrier and containment elbow fittings.

4. A double-containment thermoplastic pipe assembly as in claim **3** wherein the carrier and containment pipe fittings each extend through approximately 90°.

5. A double-containment thermoplastic pipe assembly as in claim **4** wherein the containment pipe portion of said fitting comprises two 45° elbow fittings.

6. A double-containment thermoplastic pipe assembly as in claim **4** wherein the containment portion of said fitting defines a larger cross-sectional area than the substantially linear containment pipe sections of said assembly.

7. A double-containment thermoplastic pipe assembly as in claim **6** further comprising a generally frustoconical reducer connected to and extending between the containment portion of said fitting and the substantially linear containment pipe section adjacent thereto.

8. A double-containment thermoplastic pipe assembly as in claim **6** comprising four double-containment elbow fittings connected in series to define an expansion loop.

9. A double-containment thermoplastic pipe assembly as in claim 2 wherein said fitting defines a T-fitting comprising a carrier T portion and a containment T portion, said containment T portion being formed from two containment T halves securely connected to one another and surrounding the carrier T portion.

10. A double-containment thermoplastic pipe assembly as in claim 9 wherein the containment T portion comprises a pair of substantially aligned run portions and branch portion angularly aligned to said run portions, the halves of said containment T portion being joined to one another along a plane extending generally longitudinally through said branch portion.

11. A double-containment thermoplastic pipe assembly as in claim 10 wherein said halves of said containment pipe portion are joined to one another along a plane extending generally longitudinally through the run portions thereof.

12. A double-containment thermoplastic pipe assembly as in claim 10 wherein the halves of said containment pipe portion are joined to one another along a plane disposed substantially orthogonal to said run portions thereof.

13. A double-containment thermoplastic pipe assembly as in claim 1 wherein the carrier portion of said restraint coupling has a longitudinal length greater than the containment portion thereof.

* * * * *

Minnesota
Department of Transportation
District 1
1123 Mesaba Avenue,
Duluth, Minnesota 55811

(218) 723-4801

January 3, 1989

RECEIVED
JAN 0 6 89
MPCA, Hazardous
Waste Division

Mr. Thomas P. Clark
Minnesota Pollution Control Agency
Hazardous Waste Division
Tanks and Spills Section
520 Lafayette Road North
St. Paul, Minnesota 55155

SUBJECT: TECHNICAL STANDARDS AND CORRECTIVE ACTION REQUIREMENTS FOR OWNERS AND OPERATORS OF UNDERGROUND STORAGE TANKS COMMENTS

Dear Mr. Clark:

I am submitting the following comments, not as an authorized spokesman for the Minnesota Department of Transportation nor as Chairman of their Underground Tank Storage Task Force, but as a concerned citizen, based on information I gathered as Chairman of that Task Force:

1. It is believed that underground storage tanks used for storing heating oil for consumption use on the premises should be included in the underground storage tank regulations.

2. It is felt that only one (1) regulatory agent should be involved in underground tanks. The MPCA should be the lone agency regulating the installation and activity of the underground storage tanks and the State Fire Marshall should only be involved in above ground tanks.

3. I believe that more information should be provided regarding what is required during the permanent closure and change in services. This information should be spelled out in more detail, together with what records must be put together at the time of the closure.

4. The certification of persons to install and remove tanks should be anyone who can meet the requirements and not necessarily an independent installer. The state agencies should be permitted to qualify under this requirement. There should be some thought given to the idea that these people should be bonded to provide the liability aspect of installing tanks.

I am willing to meet with you to discuss the above comments.

Sincerely,

Edward J. Fleege

Edward J. Fleege
Engineering Coordinator

cc:
Bruce Larson John Sandahl
Rod Pletan Dave Trooien

An Equal Opportunity Employer

Ashland

Ashland Petroleum Company

DIVISION OF ASHLAND OIL, INC.

P.O. BOX 391 • ASHLAND, KENTUCKY 41114 • (606) 329-3333

ENVIRONMENTAL & HEALTH AFFAIRS
DEPARTMENT

January 4, 1989

RECEIVED

JAN 0 6. 89

MPCA, Hazardous
Waste Division

Mr. Thomas P. Clark
Minnesota Pollution Control Agency
Hazardous Waste Division
Tanks and Spills Section
520 Lafayette Road North
St. Paul, MN 55155

Re: Development of Rules for
Underground Storage Tanks (USTs)

Dear Mr. Clark:

Ashland Petroleum Company would like to express appreciation to the MPCA for seeking information and opinions from affected sources prior to proposing state rules applicable to owners and operators of USTs.

Ashland Petroleum Company supports the MPCA proposal to base the state rule on the technical standards and corrective action requirements for USTs published by the U. S. Environmental Protection Agency as Part 280 of Title 40 of the Code of Federal Regulations in the Federal Register, September 23, 1988.

Per our conversation on December 6, I understand that MPCA is considering not allowing the exemption provided by the federal regulations for USTs used to store heating oil consumed on the premises. Additionally, I understand that the MPCA is considering expanding the list of regulated substances to include additional chemicals not included in the federal regulations.

Regarding these additions to the federal requirements, Ashland Petroleum Company requests that the MPCA adopt the federal regulation as is, without any additional requirements or modifications unless the MPCA has specific knowledge that these additional requirements are necessary to protect health and environment in Minnesota. Individual state requirements or modifications which differ from the federal requirements place an unnecessary burden on companies such as Ashland Petroleum, which are responsible for compliance in multiple states.

Ashland Petroleum Company presently owns and operates approximately 270 USTs located at 74 locations in the state of

Minnesota. These USTs represent only a small portion of the numerous USTs Ashland Petroleum Company owns and operates in 14 states.

Recent experience shows that the more diverse the state requirements become, the more difficult it is for companies to ensure that all of their operations are in compliance. Ashland Petroleum Company's goal is to operate all of its facilities within the guidelines of applicable federal and state regulations. Therefore, Ashland Petroleum Company requests that the state of Minnesota propose UST regulations which contain the same requirements as the federal regulations and allow multi-state industries such as Ashland to comply with one set of requirements.

Very truly yours,

Terry L. Nichols

Terry L. Nichols
Representing
Ashland Petroleum Company
P. O. Box 391
Ashland, KY 41114

TLN/rk:pk

cc: Mr. Gerald L. Willet
Commissioner

SUPERAMERICA®

Division of Ashland Oil, Inc.
1240 West 98th Street
Bloomington, Minnesota 55431
612-887-6100

RECEIVED
JAN 09 89
MPCA, Hazardous
Waste Division

January 4, 1989

Thomas P. Clark
MPCA
Hazardous Waste Division
Tanks and Spills Section
520 Lafayette Road North
St. Paul, MN 55155

Dear Mr. Clark:

In my opinion I feel the MPCA should adopt the EPA regulation published in the Federal Register for September 23, 1988. The regulations set by the EPA should do an adequate job of protecting the environment. By adopting the EPA regulations we would help in keeping consistancy in an area that is already confusing enough.

One area that needs to be addressed is that area dealing with monitoring wells. The State Health Department must change their standard or develop a new standard to allow for flush grade well installations. The process of seeking a variance for every flush grade well installation is too burdensome on tank owners. If wells are too be used for monthly or continuous monitoring, which in many installations would provide excellent protection, the health department could not keep up with the amount of paper work for variance on each. Thus adding further delays for owners to comply.

As stated, other than clearing the way for flush grade wells, I feel that the Federal EPA standards should be adopted by the MPCA.

Sincerely,

Steve Reckinger

Steve Reckinger
SA Midwest Environmental Manager
SFR/sa

Steel Tank Institute 728 Anthony Trail
Northbrook, IL 60062
312 / 498-1980

January 5, 1989

Mr. Thomas P. Clark
Minnesota Pollution Control Agency
Hazardous Waste Division
Tanks and Spills Section
520 Lafayette Road North
St. Paul, MN 55155

RECEIVED
JAN 0 6. 89
MPCA, Hazardous
Waste Division

Dear Mr. Clark:

The Steel Tank Institute is pleased to offer comments to the Minnesota Pollution Control Agency to aid in the adoption of regulations for underground storage systems.

The Steel Tank Institute is a trade association representing about 100 companies, including more than 70 underground tank manufacturers and about 100 fabrication plants. Our membership produced more than 95 percent of the cathodically protected and clad steel underground storage tanks installed in 1988.

STI's regular members with plants in Minnesota include Brown-Minneapolis Tank Co. in Eagan and Kleespie Tank and Petroleum Equipment in Morris. Regular members are licensed to manufacture the sti-P_3® tank. Derson Tank & Mfg. Co. in Watertown also has been an associate member of STI.

The Steel Tank Institute has promulgated a number of standards for underground storage tank systems, of which several were incorporated into the federal regulations.

STI was an active participant in development of the technical standards for USTs issued by the U.S. Environmental Protection Agency. These regulations provide a solid basis for the adoption of technical standards in Minnesota. The EPA regulations, however, do provide flexibility to allow states with specific health and environmental needs to impose requirements more stringent than the federal policy.

Our comments are limited to the design and construction of tank systems, and the monitoring, operation and maintenance of UST systems.

Design and Construction Requirements (Section 280.20)

In prescribing standards for new tank systems, the federal regulation requires that all UST systems be designed, constructed and protected from corrosion in accordance with a code of practice developed by a nationally recognized association or testing laboratory. The EPA regulations reference a number of these codes, including the Steel Tank Institute's standard for cathodic protection, "Specification for sti-P_3® System of External Corrosion Protection of Underground Steel Storage Tanks." The sti-P_3® standard was developed more than two decades ago by a group of steel tank fabricators working with corrosion engineers from U.S. Steel Corporation and Dow Chemical. The three components of the sti-P_3® system are: 1) dielectric isolation (bushings or flange kits); 2) a durable external coating; and 3) galvanic anodes.

The electrical isolation defines the area the anodes must protect. The use of nylon bushings etc. purposely isolates the tank from the piping. The coating is the second vital element in the standard. A tough, durable coating, properly applied and undamaged during transport and installation, has been a goal of our industry for 20 years. However, perfection in a coating cannot be reached. The third element of the sti-P_3® standard is the use of anodes to protect even a well-coated tank against corrosion that might occur due to coating "holidays" that expose the steel to the soil environment.

The sti-P_3® system accentuates corrosion prevention while it also provides structural strength and product compatibility. The 30-year warranty provided with every new sti-P_3® tank serves as added assurance that the tank will perform. As reported by the EPA in the preamble to the final regulations, there have been no failures of an sti-P_3® system, as evidenced by the lack of warranty claims.

The sti-P_3® standard is referenced in a number of state and federal codes, including the flammable and combustible liquids code of the National Fire Protection Association and the Uniform Fire Code.

Enclosed is additional information on the sti-P_3® standard for cathodic protection. For additional technical information, please contact Wayne Geyer, STI's technical director, at (312) 498-1980.

The Steel Tank Institute recommends that the MPCA adopt the federal reference of the STI standard for cathodic protection, as well as the other industry standards included in the EPA technical standards. Use of these standards will facilitate widespread compliance by owners and operators of USTs. These standards are recognized throughout the industry, and referenced by other states and code bodies.

STI also endorses the federal requirement for cathodic protection of flexible connectors (including those used with FRP tanks and piping), steel piping and other metallic components that regularly contain product and are exposed to the soil. Corrosion of these tank system components is a significant contributor to tank system leaks.

Monitoring and Operation and Maintenance of Corrosion Protection (Section 280.31)

STI concurs with the federal requirement that cathodically protected UST systems be monitored six months after installation and at least every three years thereafter. STI urges that the MPCA adopt the same monitoring schedule. It is a prudent schedule recommended by tank manufacturers and corrosion engineers. Adoption of the federal schedule by Minnesota and other states will remove confusion about monitoring requirements for the many businesses that have multi-state operations.

STI believes that all UST systems should be monitored periodically. As evidence of the Institute's strong belief in monitoring, STI will provide cathodic protection monitoring of all new, non-residential sti-P_3® tanks shipped after October 1, 1988, during the 30-year life of the warranty.

The concept of burying a tank system and forgetting it is no longer acceptable. There is increasing awareness that all components of underground storage systems should be monitored periodically after installation.

STI urges the MPCA to require all USTs -- cathodically protected, steel coated with fiberglass and fiberglass-reinforced plastic (FRP) -- to be monitored on a regular basis. Each of these technologies can be easily monitored, which provides an additional margin of environmental safety. Post-installation monitoring assures the public that installation was properly performed, the tank is operating as designed and the underground environment has not changed (i.e. through the freeze-thaw cycle) the UST system's effectiveness.

Tanks constructed of a steel-FRP composite, as with other coated steel structures, can be subject to corrosion. A simple test with a high impedance voltmeter and a copper/copper-sulfate reference cell can determine if the tank is protected from corrosion. Recently, the Western Fire Chiefs Association amended the Uniform Fire Code to require that all new steel tanks be monitored for corrosion, including steel-FRP composite tanks.

FRP tanks can and should be monitored by periodic deflection measurement to ensure that such tanks have not lost structural integrity and gone "out of round." Although FRP tanks will not fail due to galvanic corrosion, they are subject to failure from structural stresses and product incompatibility. The basic design of FRP tanks relies on the the vital structural support provided by the backfill material surrounding the tank. A shift in the backfill can cause a tank to deflect "out of round." A deflection of only a few percent may cause a failure and release of petroleum product into the environment. FRP tank manufacturers require a deflection measurement to be taken only at the time of installation. However, problems due to improper backfill type, improper placement of backfill and backfill shifting related to the geotechnical dynamics of a particular location may occur some time after installation.

STI looks forward to working with you in developing regulations in Minnesota. Please contact me if the Steel Tank Institute can provide any additional information.

Regards,

James E Wisuri

James E. Wisuri
Manager of Communications

enclosures

Amoco Oil Company

Thomas P. Clark
MPCA Hazardous Waste Division
Tanks and Spills Section
520 Lafayette Road North
St. Paul, Minnesota 55155

December 15, 1988

RECEIVED
DEC 19 88
MPCA Hazardous Waste Division

Mr. Clark,

As the person responsible for defining standards for Amoco Oil Company's marketing department underground tank systems, I recently received a copy of the MPCA's solicitation of outside comments regarding it's plans to adopt rules on underground storage tanks for the state of Minnesota.

While Amoco appreciates the opportunity to comment on the MPCA's plans, it is difficult to do so at this point in time, as there is little in the solicitation which indicates the MPCA's thinking on this matter.

Perhaps the most telling comment in this regard is the statement that "the MPCA intends to base the rules on" the recently released EPA UST rules. If this is an indication that the MPCA intends to adopt rules which are more stringent than the federal requirements, Amoco would like to register it's reservations in this regard.

Amoco participated in the hearing and comment phases of the federal effort leading to the EPA's UST regulations and believes, as does the EPA, that the regulations provide adequate protections of health and the environment. For MPCA to embark, even before the federal requirements become law, on an effort to write a new set of regulations for Minnesota, which are intimated to be even more strict, is not warranted in Amoco's opinion. Further, such an effort at this point in time can only impede progress by creating uncertainty over what EPA requirements may, or may not, be accepted in Minnesota.

Amoco would strongly urge the MPCA to do nothing more than adopt the final UST technical standards and corrective action requirements set by the EPA. This will allow both tank owners and the MPCA to proceed with implementing a uniform program. If after a reasonable period (eg. two years) Minnesota finds that the EPA UST requirements have weaknesses in regards to Minnesota's needs, then appropriate revisions could be undertaken based on experience.

As noted earlier, Amoco appreciates this opportunity to comment on the MPCA's proposed actions. As this effort by the MPCA proceeds, I would appreciate being kept apprised of developments. Information may be directed to me at the address shown below.

D.J. Strock - MC 1402
Amoco Oil Company
Marketing Department
200 East Randolph Drive
Chicago, IL 60601

cc: D.M. Barker - MC 1607
D.L. Clark - Twin Cities District
R.C. David - MC 1402
D.J. Grissom - MC 4901
P.D. Wright - MC 3705

December 16, 1988

Mr. Thomas P. Clark
Minnesota Pollution Control Agency
Hazardous Waste Division
Tanks and Spills Section
520 Lafayette Road North
St. Paul, Minnesota 55155

RECEIVED
DEC 19 88
MPCA, Hazardous
Waste Division

Dear Mr. Clark,

In response to Mr. G. L. Willet's request for outside opinions regarding your Agency's development of rules for underground storage tanks, we respectfully submit the enclosed document.

We would welcome the opportunity to address any questions related to this submittal. Thank you for your consideration.

Very truly yours,

Corrpro Companies, Inc.

Michael K. Baach
TLD

Michael K. Baach
Vice President
(713) 350-0205

cc: S. Scott
W. Carlson
J. Bushman
D. Kroon
J. Rog
B. Jones

mkb/tld

corrpro

Corrpro Companies, Inc.

Corporate Headquarters
P.O. Box 1179
Medina, OH 44258
(216) 723-5082
Telex 887227

Atlanta
2395 Clower Street, Suite Q
Snellville, GA 30278
(404) 985-0222

Chicago
P.O. Box 72187
Roselle, IL 60172
(312) 980-8770

Denver
7388 S. Revere Parkway
Suite 702
Englewood, CO 80112
(303)799-6631

Houston
P.O. Box 100
Spring, TX 77383
(713) 350-0205

Los Angeles
1445 Donlon Street, Suite 11
Ventura, CA 93003
(805) 650-1258

New Orleans
P.O. Box 2029
Kenner, LA 70063
(504) 467-7766

Philadelphia
129 Brandywine Parkway
West Chester, PA 19380
(215) 344-7002

San Francisco
31909 Hayman Street
Hayward, CA 94544
(415) 471-2233

Seattle/Portland
P.O. Box 1309
Vancouver, WA 98666
(206) 573-5235

COMMENTS REGARDING MINNESOTA POLLUTION CONTROL AGENCY'S RULES DEVELOPMENT FOR UNDERGROUND STORAGE TANK SYSTEMS

RECEIVED
DEC 19 88
MPCA, Hazardous Waste Division

prepared by:

CORRPRO COMPANIES, INC.

December, 1988

corrpro

Corrpro Companies, Inc.

Corporate Headquarters
P.O. Box 1179
Medina, OH 44258
(216) 723-5082
Telex 887227

Atlanta
2395 Clower Street, Suite Q
Snellville, GA 30278
(404) 985-0222

Chicago
P.O. Box 72187
Roselle, IL 60172
(312) 980-8770

Denver
7388 S. Revere Parkway
Suite 702
Englewood, CO 80112
(303)799-6631

Houston
P.O. Box 100
Spring, TX 77383
(713) 350-0205

Los Angeles
1445 Donlon Street, Suite 11
Ventura, CA 93003
(805) 650-1258

New Orleans
P.O. Box 2029
Kenner, LA 70063
(504) 467-7766

Philadelphia
129 Brandywine Parkway
West Chester, PA 19380
(215) 344-7002

San Francisco
31909 Hayman Street
Hayward, CA 94544
(415) 471-2233

Seattle/Portland
P.O. Box 1309
Vancouver, WA 98666
(206) 573-5235

COMMENTS ON

MINNESOTA POLLUTION CONTROL AGENCY'S

RULES DEVELOPMENT

FOR

UNDERGROUND STORAGE TANKS

INTRODUCTION

We would like to reinforce our qualifications to speak as experts in areas involving corrosion, corrosion control and management of underground storage tank (UST) systems. Corrpro Companies, Inc. is an engineering firm with emphasis on developing safety and protection programs for buried and submerged structures. We have established, implemented and maintained successful corrosion control programs for structures, including underground tank systems, world wide. Our personnel are active members of the National Association of Corrosion Engineers committees which developed standards for underground tanks.

Corrpro is not a manufacturer of cathodic protection, internal lining or external coating materials for corrosion control. We therefore have no selfish corporate incentive to design a particular product or technology into an operator's UST program. Our goal is to choose the best and most applicable solutions to our clients' system requirements.

Corrpro was a contractor to the US EPA's Office of Underground Storage Tanks. We presented numerous seminars to EPA and state regulatory personnel on various aspects of UST system management. We were consulted on technical areas during the development of the federal UST rules, and sat on expert panels during the public comment phase of the rule making process. We therefore speak from an expert position in the areas we will address in this document.

EXCLUSIONS

EXEMPTED UNDERGROUND TANK SYSTEMS

Should the federal EPA UST rules be adopted as written, the Agency would exempt or exclude certain tanks from their regulation. It is our feeling that this is a serious mistake. The failure mechanisms for UST systems are the same regardless of tank size. By their vast number, the exempted tanks represent a tremendous risk to the Minnesota environment.

However, the volume of these facilities would make enforcement difficult to impossible should the existing population be subject to the present law. It would therefore be most effective to regulate new tanks or those to be replaced. We strongly urge that all new farm and residential UST systems, regardless of size, be required to be either fiberglass or coated steel with cathodic protection. It is reasonable to exempt these tanks from monitoring, leak detection and other requirements. It is not reasonable to allow installation of new tanks that do not meet the requirements for prevention of releases.

Because of their potential risk to the environment, waste water treatment tanks should be required to be installed with the release prevention elements of the regulation i.e. non-corrodible materials or coatings and cathodic protection.

NEW UST SYSTEMS

FIBERGLASS CLAD STEEL TANKS ("COMPOSITE" TANKS)

From our testing and experience, "cladding" a steel tank with fiberglass represents a coating, and no coating is perfect. Though testing of a properly applied fiberglass coating affirms that it is most effective, it cannot be assumed to be "holiday free", either before or after installation of the tank system. Certainly, during the manufacturing process some percentage of the tank's surface will inadvertently be less than perfectly coated. Also, during handling, shipping and installation, it can be reasonably assumed that a significant percentage of the tanks will suffer some form of coating damage. Further, impacts to the tank steel can cause it to deflect away from the fiberglass coating resulting in a disbonded area. Since moisture can penetrate to the steel surface, corrosion will proceed even though there may be no visible damage to the coating.

There is no in situ test data, of which we are aware, that supports the position that cathodic protection is not necessary to prevent releases from fiberglass coated steel tanks. To rely solely on the fiberglass coating to prevent a release from an underground storage tank is contrary to both our understanding of the intent of the regulation, and corrosion control industry standards.

For these reasons, we maintain that cathodic protection is as necessary for metal components of an underground tank system coated with fiberglass as it is for any other metallic structure.

The cost for providing a galvanic cathodic protection system is insignificant compared to the cost of manufacturing the tank and applying the fiberglass coating. From a performance standpoint, cathodic protection would enhance the overall durability of the fiberglass coated systems and must therefore be made a requirement.

If cathodic protection is not required for these systems, we feel that, as a minimum, regular testing be conducted to confirm the integrity of the fiberglass coating. This testing should be conducted six months after the tank system is installed and every three years thereafter.

UST SYSTEM UPGRADES

INTERNAL LININGS

While internal corrosion of steel tanks has recently received much publicity, little evidence has been found to support concern for this reported problem. In recent detailed testing performed by Corrpro engineers on over 10,000 tanks located in 44 states, only one tank was found to have an internal corrosion perforation. For existing tanks, early detection of internal corrosion is a relatively simple process which should be part of the regular testing required for steel tanks with cathodic protection. Where corrosion is detected, internal galvanic anodes can be installed to eliminate further corrosion. Where corrosion is advanced, an internal lining should be properly applied.

To ensure proper application, the Agency's rules must require that internal lining be inspected after installation by a qualified coatings expert. To ensure the reliability of this process, the coatings expert must be independent of the lining manufacturer and applicator. This service can best be provided by an independent consultant.

A major failure mechanism for internal tank linings is external corrosion. Over time, external corrosion of the remaining steel tank shell will continue. Eventually, the corrosion pits will "grow", leaving only the internal lining to contain the stored product. Once the weight of the product exceeds the mechanical strength of the lining, a fracture will occur resulting in a major release. It is therefore essential that the final rules require external cathodic protection of a tank at the time internal lining is applied.

RETROFITTING CATHODIC PROTECTION

The federal EPA's data overwhelmingly indicates that arbitrary replacement of leak-free underground tank systems will result in an overall higher leak rate in the tank system universe. This conclusion is based on EPA's own documentation of the causes for leaking underground storage tanks. The data clearly identified that new tank installations experienced a very high annual leak rate which gradually reduced during the first 5 years. This phenomenon is directly related to structural deficiencies which existed either prior to installation of the tank and its associated components, or were created during the installation process. While regulations may improve on the number of leaks caused by this phenomenon, they will not reduce them to the rate which would be achieved by effectively applying cathodic protection to leak-free tank systems with proven mechanical reliability. Problems associated with leaks from new installations can be expected for both tanks and piping. Therefore, rules requiring the replacement of existing leak-free tanks and piping must not be considered.

Cathodic protection is a long proven technology which will stop corrosion of leak-free systems and in turn prevent any further system leaks. Other areas of government have recognized this for years. For instance, in 1968, Congress passed the Natural Gas Pipeline Safety Act. The Act resulted in the formation of the Office of Operations and Enforcement within the U.S. Department of Transportation which established the regulations required for the operation of these pipelines. In summary, Subpart I of these regulations required that cathodic protection be retrofitted to virtually all existing

natural gas pipelines not already protected. Their decision was based on conclusive evidence that cathodic protection can effectively stop future corrosion on buried and submerged steel structures as long as it is operated and maintained in accordance with established criteria.

ISOLATED METALLIC COMPONENTS

All metallic components of an underground tank system are subject to corrosion including flex connectors, risers, fittings, swing joints, etc. Therefore, they must be protected from corrosion. This can be accomplished in most cases using an inexpensive combination coating and anode system. However, in order to ensure the long term performance of the corrosion control system, it must be designed by a corrosion control expert.

CORROSION PROTECTION SYSTEMS TESTING CRITERIA

The criteria for cathodic protection should simply reference the National Association of Corrosion Engineers standards as these may be modified in concert with new technological developments. Should the NACE standard be followed, the regular testing requirement for cathodically protected steel systems should include electrical continuity tests of piping systems with screw couple joints. This would eliminate the possibility of system failure resulting from cathodic interference due to pipe discontinuity.

If, in the final regulation, the Agency allows fiberglass "clad" tanks without cathodic protection to be considered corrosion protected, they must be regularly tested at intervals consistent with those for other corrosion control systems. Monitoring must be required in order to ensure that the integrity of the coating is maintained over time.

RELEASE DETECTION

EPA's data clearly indicates that age is not a reliable independent variable in determining when a tank system will fail. Therefore, by mandating that tank systems be upgraded with release detection in descending order of age as dictated by the federal rules, the goal of protecting the Minnesota environment will not necessarily be accomplished.

By using proven engineering practices based on site specific data, release detection programs can be developed for staged implementation based on each UST system's relative level of risk to the environment. The Agency's rules must therefore permit implementation of release detection, and other upgrade components, based on qualified engineering recommendations in lieu of age. However, to ensure staged compliance, the Agency should stipulate that a minimum of 20% of an operator's UST systems be upgraded annually.

0050.mkb

rec'd 12/21/88

Arizona Instrument

Mr. Thomas P. Clark
MPCA Hazardous Waste Div.
Tanks and Spills Section
520 Lafayette Road North
St. Paul, Minnesota 55155

December 18, 1988

Dear Mr. Clark;

Arizona Instrument Corporation (AZI) offers the following comment on the proposed rule making in Minnesota applicable to owners and operators of underground storage tanks (UST) in the state.

The U.S. EPA technical standards permit releases up to 0.2 gallons per hour, based on the EPA's estimate of the current state of the art in release detection using "in-tank" methods. It is easy to calculate that at that release rate, if only 10% of Minnesotas UST's were leaking, millions of undetected gallons of hazardous fluids would be emitted into the soil and ground water each year. This is a conservative estimate, as the EPA feels that as many as a third of all tanks leak to some degree. Fortunately, a better leak detection alternative is now available (see enclosed product literature).

AZI offers a product capable of detecting leaks in UST's containing gasoline at levels 100 times smaller than permitted under the minimal technical standards published as Part 280 of Title 40. We believe that aspirated vapor monitoring is a proven and sensitive method for detection and classification of leaks and spills of gasoline, as evidenced by over 300 successful installations in the state of California, beginning in 1986.

We suggest that aspirated vapor monitoring, with an action level of 1000 PPM of hydrocarbon vapor in soil gas, be adopted as the leak detection method of choice for the state of Minnesota. Form more information, please call me at 1-800-528-7411.

Sincerely yours,

W Raisanen

Walfred R. Raisanen
Chairman, V. P. of R & D

zona Instrument Corp.
P.O. Box 1930
1100 East University Drive
Tempe, Arizona 85281
(602) 731-3400
(800) 528-7411
Telex 910-950-0134
FAX (602) 731-3434

United Power Association
ELK RIVER, MINNESOTA 55330-0800 612-441-3121

DEC 23 88
MPCA, Hazardous Waste Division

December 21, 1988 Our File 1-89

Mr. Thomas P. Clark
Minnesota Pollution Control Agency
Hazardous Waste Division
Tanks and Spills Section
520 Lafayette Road North
St. Paul, MN 55155

Re: Development of Rules for Underground Storage Tank (UST) Management

Dear Mr. Clark:

United Power Association (UPA) offers the following comments on the subject of rule-making:

1. The Minnesota rules to be written for UST management should be identical to the federal rules of 40 CFR 280 as published in the Federal Register of September 23, 1988 and October 26, 1988. If the federal rule must be rewritten at all, we suggest that even the numbering system itself should be similar to that of the existing federal rules. In our opinion, this approach will preclude unnecessary confusion.

2. The portion of the rules dealing with financial responsibility should address the mechanism by which the Minnesota Petrofund may (partially) account for an owner/operator's test of self-insurance.

Thank you for the opportunity to comment. Please maintain United Power Association on your list of parties interested in the development of the UST rules.

Sincerely yours,

UNITED POWER ASSOCIATION

James F. Eggen, Environmental Engineer
Environmental and Lands Division

JFE:sgh

Clark.PCA

In-situ Inc.

7401 W. MANSFIELD AVE., SUITE 114, LAKEWOOD, CO 80235 (303) 987-1877 TWX 910-949-4944

RECEIVED
DEC 27 88
MPCA, Hazardous
Waste Division

December 23, 1988

Mr. Thomas P. Clark
MPCA, Hazard Waste Division,
Tanks and Spills Section
520 Lafayette Road North
St. Paul, MN 55155

Dear Mr. Clark:

We are pleased to have the opportunity to respond to your solicitation for comments on Minnesota's protocol for the management of underground storage tanks. Our comments and enclosed information pertain to the area of release detection requirements. We understand you will be receiving materials at MCPA until January 6, 1989, and after that time will be evaluating all responses.

In-Situ Inc. is a consulting engineering firm specializing in a variety of related activities that include an 8-year experience in instrumentation. One of our three primary business activities is the design, manufacture, sales and service of our Petrochemical Release Monitoring device, or PRM systems.

Several of our devices are described in the accompanying catalog and Owner's Manual. You may note that our equipment is designed for use in either double-wall, interstitial space monitoring, or for vadose zone and ground water monitoring in observation wells.

Regarding the federal UST guidelines, we have been a little surprised at how closely the recently published Preamble and Rules and Regulations parallel our efforts. The Preamble sets the stage, I believe, for our response concerning three significant areas of concern: (a) background contaminations, (b) sensitivity of vapor monitors, and (3) false alarms.

Our corporate Vice President, Mr. Phil Gerhart, was one of the commentors discussed in the Preamble that argued against the low level detection rate specified in the proposed version of the rules. We submitted data and cited experiences we have had in Texas, where small amounts of gasoline (10 to 20 gallons) discharged into the tank backfill by a fuel transport driver caused our units to alarm. The point made by us was that most stations have petroleum product related soil gas concentrations above 500 ppm and have never had a leak. Thus, when a real leak or discharge occurs, it is detectable by units that have taken background into account.

We know that false alarms are a significant problem with many of the electronic sensors. Our distributor in the San Joaquin Valley in California said the last time it rained he had all 17 of his service trucks out responding to alarms. We also know that to avoid these occurrences people are setting the threshold level to the maximum, thus overriding the intent of the unit. We elected to take what we believe to be a rational engineering approach, and the USEPA agreed. Note, on page 163 (enclosed) that they believe very sensitive devices are not only unnecessary but even undesirable.

We feel that two things are readily observable: (1) petroleum vapors can migrate through most soil conditions, and (2) in good granular media, such as that specified by EPA, vapor concentrations greater than 5000 ppm are not far behind a 500 ppm plume. Our sensing element, as shown in our readily available lab data, responds to gasoline vapors within about 24 hours at concentrations of 5000 ppm and in about 2 hours at concentrations, near 10,000 ppm. The higher level required to initiate an alarm is our defense against false alarms in an environment where we know there will be some contamination. The reasonably quick response at 10,000 to 20,000 ppm assures that if a leak is occurring the tank owner will be notified of it in time to minimize the problem. We recommend, in the event of an alarm, that the sensing element be exchanged and the monitor reinstalled. If something other than a transient plume was involved in the alarm the tank owner would know that in approximately 2 hours. With hundreds of In-Situ units now out in the field, we have not been aware of any false alarms. On the other hand, we have recorded incidents documenting actual leaks that were detected by our monitors in every monitoring condition we address.

The confidence we have in our technology and ability to counter false alarms has resulted in good "feedback" from our widespread markets from California to New England. Hopefully these comments will provide helpful insight in your upcoming legislature procedure.

Yours truly,

Marc Bateman

Marc Bateman
Sales Manager, PRM Division

MKB:kot
Enclosures

cc: Len Wolf

(d) Sensitivity of the Vapor Monitor. The proposed rule stated that the threshold of the vapor monitor must be preset specifically for the type of regulated substance stored in the UST. This requirement was included in an attempt to increase the sensitivity of the monitor to detect releases in areas with background hydrocarbon levels. Since proposal, however, changes have been made to the vapor monitoring requirements based on public comment and new EPA analysis that make this requirement unnecessary or even undesirable. Tracer compounds may now be used for vapor monitoring, so specificity of the monitor to the regulated substance is undesirable. The EPA-sponsored computer modeling that was conducted on vapor monitoring performance indicated that, in some circumstances, a monitor would be more effective if it monitored for a single component of the stored substance than the complete stored substance because it would be able to differentiate more distinctly between a leak of that component and existing background hydrocarbon levels. Again, specificity of the monitor to the complete regulated substance would be undesirable. The final rule now simply requires that the monitor be capable of detecting a significant increase above background of the regulated substance, a component or components of the substance, or a tracer compound. This change will allow the use of existing sensitive monitors such as those measuring BTX (benzene, toluene, xylene) or "total hydrocarbons" because they can detect components of many regulated substances.

(6) Ground-Water Monitoring (§ 280.43(f)).

The proposed rule allowed the use of monitoring for free product on top of the ground-water table to determine the presence of a release from an UST system. Many commenters agreed with this approach to release detection but wanted EPA to ease some of the limitations placed on the use of the method. The final rule still allows monitoring on top of the water table for free product but with several changes: well placement is no longer limited to the excavation zone; the well screen must be designed to prevent clogging and intercept the water table at both high and low ground-water conditions; and the well must be sealed from the ground to the top of the filter pack.

(a) Effectiveness. In the proposal the Agency recognized that there are several concerns about the use of ground-water monitoring, primarily the fact that the resource being protected (i.e., ground water) is the medium in which the release is detected. The Agency included this release detection method in the proposed rule, however, because this method has been demonstrated to successfully detect small petroleum releases and it is currently in widespread use in several state UST programs, such as that in Florida. EPA proposed limiting ground-water monitoring only to floating free product because its presence can be detected more quickly and reliably following a release than can dissolved product. The proposed rule also contained several limitations on well design, well placement, and equipment performance that together were intended to limit the use of this method to those conditions under which rapid detection could be ensured.

Most commenters supported ground-water monitoring as a release detection method in common use that has successfully detected leaks. One commenter expressed reservations about the method, saying that released product can migrate away from monitoring wells around an UST system and claimed some

AUTOMATED
PETROLEUM
SERVICES
INC.

1400 ENERGY PARK DRIVE
SUITE 20
ST. PAUL, MN 55108
612/645-8551

RECEIVED
JAN 03 '89
MPCA Hazardous
Waste Division

December 28, 1988

Thomas P. Clark
Minnesota Pollution Control Agency
Hazardous Waste Division
Tanks and Spills Section
520 Lafayette Rd. North
St. Paul, Mn. 55115

Re: Underground Storage Tank Management

Dear Mr. Thomas P. Clark

I am a manager at Automated Petroleum Services, Inc. in St. Paul, Mn. APS is exclusively in the business of fuel storage and dispensing.

We believe licensing of contractors at a fee of $2,000.00 per year, will keep only people of expertise in our field and offset governmental costs of doing so.

Soil testing all sites that have tanks removed, so as to determine any clean up needed, along with tank testing every (5) years, will on new tanks and every year on tanks that are questionable as to their cathodic protection, will keep our environment clean.

Permits and tests as they stand presently for tank and piping installation are working well and should be kept.

All installation within (5) years should be licensed and brought up to the same guidelines as new installation.

I hope this will help your decision making in our field.

Sincerely,

John Landwehr

John Landwehr
JL/hk

FEDERATED INSURANCE

121 East Park Square, Owatonna, Minnesota 55060
Telephone: (507) 455-5200

December 29, 1988

RECEIVED
DEC 30 88
MPCA Hazardous Waste Division

Thomas P. Clark
MPCA Hazardous Waste Division
Tanks & Spills Section
520 Lafayette Road North
ST. PAUL MN 55155

Thank you for your invitation to comment on the MPCA's plan to adopt technical standards and corrective action requirements for USTs. Based on our company's experience with pollution liability insurance, we feel the best option for the state would be to adopt the regulations proposed by the EPA as they are written.

Adopting the regulations as written would be beneficial to all parties concerned. There would be no question that the rules are "no less stringent than" the Federal regulations and would win easy approval with the EPA. The regulated community has heard so much about the proposed Federal rules, that the general assumption is those are the rules they must operate under. By adopting those rules as written, it will avoid confusion with the regulated community regarding what standards are in place. An additional advantage to adopting the Federal rules as written is the wealth of information obtained by the EPA in their rule making process. Presumably less background research would be necessary since the EPA has collected so much information regarding their proposed standards.

We appreciate this opportunity to comment.

Jeanne Hankerson
Environmental Coordinator
kms

ASAHI/AMERICA® 425 Riverside Avenue, Medford, MA 02155 • P.O. Box 310 • Tel. (617) 391-2353 • Telex: 94-9411 • Cable: Valves Medford

January 3, 1989

Minnesota Pollution Control Agency
Hazardous Waste Division
Tanks and Spills Section
520 Lafayette Road, North
St Paul, MN 55155

Attn: Mr. Thomas P. Clark

Dear Mr. Clark,

We have received the MPCA letter regarding the development of rules for UST management. We manufacture the Asahi/America DuoPro double containment Polypro and PVDF pipe systems, and hold patent number 4,786,088 (attached). Our system is in complete compliance with the U.S. EPA requirements stated in part 280, title 40, of the code of Federal regulations, concerning buried hazardous substances.

We believe that corrosion resistance, expansion and contraction control, physical strength and compatibility with leak detection systems are the principle concerns in compliance, for a double walled pipe system handling hazardous materials. To these ends we suggest you consider the following pipe system characteristics to ensure that the system will meet the intent of the U.S. EPA codes.

A) Hazardous substance pipe joining. Butt welding provides the most secure pipe joint, with the weld being stronger than the pipe itself.

B) Inspection of the joint in a butt weld system can be done accurately.

C) Internal and external pipe should be of the same material to maximize corrosion capability while minimizing expansion and contraction differential problems.

D) A system of anchors designed to control differential expansion and contraction must be used.

E) The design of the annular space must ensure that the space between the internal and external pipe is maintained in order to facilitate the required leak detection tapes.

F) A support system must be designed into the double wall pipe line to provide stability when buried by protecting the pipe from ground burial loads.

Mr. Clark, I have enclosed a copy of our patent. It will demonstrate the design characteristics necessary in a pipe system that will produce the leak prevention the U,S. EPA is seeking. Please contact me if I can assist your office in any way.

Very truly yours,

ASAHI/AMERICA, INC.

William Lanahan

William Lanahan
National Sales Manager

cc: Ken Carey
Tim Robinson
Bud Lewis

Eagle Construction, Inc.

50 East Broadway
Little Falls, Minnesota 56345
(612) 632-3548

RECEIVED
NOV 30 88
MPCA, Hazardous
Waste Division

November 29, 1988

Minnesota Pollution Control Agency
Hazardous Waste Division
Tanks and Spills Section
520 Lafayette Road North
St. Paul, MN 55155

ATTENTION THOMAS P CLARK

Dear Mr. Clark:

I am writing in response to your request for comments on the rules applicable to underground storage tanks. I would like to see uniformity among the UST installation requirements. Also, I feel the counties should be responsible for inspections and reports for such systems.

I look forward to attending any meetings in our area related to this subject.

Sincerely,

Randall Radziej

Randall Radziej

lat

INDIANHEAD
TRUCK LINE INC.

December 14, 1988

DEC 16 88

Hazardous Waste Division

Mr. Thomas P. Clark
MN Pollution Control Agency
520 Lafayette Road North
St. Paul, Minnesota 55155

Re: Underground Storage Tank Rules

Dear Mr. Clark:

Indianhead Truck Line, Inc. supports adoption of the federal rules. We hope that any underground tank we remove from service can be replaced by an above ground tank, properly diked, in order to eliminate the risk to the ground water supply, the expense of insurance, and the risk of problems more costly than insurance expense.

I enclose an underground tank advisory bulletin, author unknown, and an exchange of correspondence with Commissioner Willet which I think you should also consider. The idea of temperature information on shipping papers is not being suggested for the benefit of transporters, but for the benefit of all underground petroleum storage tank users. If you investigate and find my concern is unfounded, please toss this correspondence in the basket and accept my apology for wasting your time.

Another idea that could be considered is a tax credit or a payment from the state super fund for removing and replacing underground petroleum tanks with above ground tanks or the new technology underground tanks. One might conclude an incentive is already provided to replace tanks, because if a tank has a leak, the owner's concerns are going to be much greater than replacing the tank, but too often the concern arises after a leak is detected and by then ground water may be contaminated and the state super fund must be used to clean it up.

Convert the clean up costs I've read about to 50% of the cost of a tank replacement, as a tax credit or direct payment, and see how many tanks can be replaced for the cost of one cleanup. The new federal rules are intended to prevent damage; Minnesota might continue to lead the way in preventing pollution by the use of credits or allowances. A tax credit would benefit all tax payers as it removes the polution risk from the public water supply; or, a payment from the superfund will be paid by all gasoline and diesel users because their need for petroleum caused the indirect need for underground tanks. Either idea would seem to be justifiable after some deliberation on the matter.

Sincerely yours,

Les Wilsey Jr

Lester A. Wilsey,Jr., President
LAW,JR:amw
cc: Commissioner G. Willet
James N. Denn, MTA
Robert Krogman, NWPA

MTA MEMBER
MINNESOTA TRUCKING ASSOCIATION

MAIL ADDRESS: 1947 W. COUNTY ROAD C, P.O. BOX 64355, ST. PAUL, MN 55164-0355 **(612) 633-2661**

UNDERGROUND TANK ADVISORY

With the passage of stringent underground tank regulations, inventory management becomes more and more important to underground tank owners. To assist in monitoring inventory to satisfy the provisions of the regulations, and to protect legal interests, sophisticated schemes are popping up like mushrooms. In this almost frantic environment, it is very easy to overlook one very common possibility of inventory shortage. Regulatory agencies, such as pollution control agencies, have indicated they were not aware of this explanation for product shortage.

The cause of this product loss, which can be significant, is temperature disparity between the temperature at which the product is loaded and the temperature at which the product is stored in your underground tank. For example: an actual 8000 gallon load of gasoline had "shrinkage" of 170 gallons because there was a 20 degree temperature differential, or approximately 1.4%. At disparities of 10 degrees it's .69%, at 30 degrees its 2.08%, at 40 degrees it's 2.78% and at 50 degrees it's 3.48%.

Over time, with a pattern of such unexplained losses, MPCA audit of inventory records can lead to requiring tank testing, ground water monitoring, or even tank removal, all in an attempt to explain and/or correct the disparity.

To help eliminate these concerns, there appears to be one very significant counter measure, and that is concerted action requesting regulatory agencies to require loading origins to provide product loading temperatures on all manifests so the buyer has the documentation to explain the unexplainable to agencies like the MPCA, and to reconcile inventories for internal control.

The issue is of sufficient magnitude to bring to your attention in hopes that changes can be made for the protection of all.

Author Unknown

COPY - THOMAS CLARK

INDIA HEAD
TRUCK LINE INC.

October 28, 1988

Commissioner Gerald Willet
Minnesota Pollution Control Agency
520 Lafayette Road
St. Paul, Minnesota 55155

Dear Commissioner Willet:

About a year ago , I spoke to Jim Denn, President of the Minnesota Trucking Association, about the attached topic, and he suggested I contact the PCA. I did not do so, because I didn't know anyone there who I felt would understand or care. Now that you, who have some knowledge of our industry, are Commissioner, I thought I'd write annd see if you consider the subject worthy of consideration. By way of introduction of myself, I have met you in the company of Jim Denn, in your office, on various truck legislative matters.

Enclosed is the item I picked up, the authorship of which I am unaware, but I believe the author is correct.

Our business is delivering full transport loads of 8,000 to 9,000 gallons of gasoline or diesel fuel to underground storage tank owners. With an average underground tank temperature of perhaps 40-50 degrees, you can understand the problem when we deliver 60 to 80 or 90 degree product. During the coldest months, it's still possible to receive warm product at a terminal that shrinks enroute and/or in the storage tank. We have had customers very upset with us because they felt we were shorting them product on delivery, when in fact it was shrinkage.

Because inventory control is one of the approved methods of determining tank integrity, I would appreciate having the opportunity of discussing with the person in charge a rule and/or a law change that would require all points of origin for transport loads of petroleum products to provide product loading temperature on their shipping manifests. I must stress this is not a personal whim, nor an issue solely involving our company, if it were I would not have the audacity to contact you. We also do not want to be the one to publicly propose such a rule because there may be terminals we load at who might dislike the idea.

Sincerely yours,

Lester A. Wilsey, Jr.
President

LAW,JR:MW
cc: James N. Denn, MTA

MTA MEMBER
MINNESOTA TRUCKING ASSOCIATION

MAIL ADDRESS: 1947 W. COUNTY ROAD C, P.O. BOX 64355, ST. PAUL, MN 55164-0355 (612) 633-2661

POP F-1

Tony Clark

Minnesota Pollution Control Agency

November 22, 1988

Mr. Lester A. Wilsey, Jr.
President
Indianhead Truck Lines, Inc.
1947 W. County Road C
P.O. Box 64355
St. Paul, Minnesota 55164-0355

Dear Mr. Wilsey:

Thank you for your letter of October 28, 1988, concerning product shrinkage while in transport. I understand your problem, but I am afraid we cannot be of much assistance. Our concern and authority lies rather in product within the user's tank, which is usually dealt with by the tank operator allowing the product to rest in the tank and equalize its temperature with its surroundings before inventory.

I am sorry we could not be of assistance, but perhaps this is something worth your exploring with the Weights and Measures Division of the Department of Public Service, 2277 Highway 36, Roseville, Minnesota 55113 at 612/341-7200.

Sincerely,

Gerald L. Willet

Gerald L. Willet
Commissioner

GLW:kh

cc: Mr. James N. Denn, Minnesota Trucking Association

INDIANHEAD
TRUCK LINE INC.

December 1, 1988

Commissioner Gerald L. Willet
Minnesota Pollution Control Agency
520 Lafayette Road
St. Paul, Minnesota 55155

Commissioner Willet:

Your November 22nd letter states the PCA does not have a concern about petroleum product loss because of shrinkage which occurs due to changes between product temperature at loading and at which it is stored. The shrinkage, if any, during transport is not the problem, nor is it what this discussion is about.

It is my opinion the PCA not only should have a concern, but should use its authority to require the provision of product temperature information which is crucial to the accurate monitoring of product loss from underground storage tanks.

The federal government has just issued extensive regulations on the use, maintenance, and testing of underground storage tanks. One of the provisions applying to certain age tanks is that the owner, if desiring to continue use of the tanks, must practice inventory control on a daily basis, as well as have the tank tested annually, in order to determine the tanks are leak free.

One cannot maintain accurate daily inventory control without consideration of volume changes due to temperature differentials and be reasonably confident of any conclusion drawn as to reason for product loss. Should an audit of an underground tank user's daily inventory records indicate an unexplained loss of product, and without the aid of temperature information to assist in determining volume fluctuations, I believe expensive soil boring tests would be required. I am sure you would agree it to be more logical and efficient to eliminate all less complicated possibilities before concluding the product is seeping into the ground. The cost of what might possibly be an unneeded procedure would be an unjust burden on small business underground tank users, farmers with underground tanks, small town and big city truckers, etc.

MEMBER
MTA MINNESOTA TRUCKING ASSOCIATION

MAIL ADDRESS: 1947 W. COUNTY ROAD C, P.O. BOX 64355, ST. PAUL, MN 55164-0355 (612) 633-2661

The Weights and Measures Division have nothing to do with the problem I've presented. They would be concerned if a customer were shorted on product by the meters at the loading terminal, but in such a situation a customer would not have been shorted. The meters will show the loading of 8,500 gallons of product at (example) 80 degrees, but when that product is unloaded into an underground tank which maintains a temperature of (example) 60 degrees, there is a hundred and seventy gallons of shrinkage.

It is impossible for the tank owner to secure loading temperature information, unless the loading point is required to provide it on the shipping document. One might believe it should be done voluntarily, but I think you know the surest way to level the playing field is to do it by regulation. The shipping document is also an accepted legal record in the event an issue is raised.

We, as a transporter, or our association, cannot publicly propose such rule making, as it would jeopardize our relationship with suppliers and customers, who are often one and the same. I believe by requiring the additional tool of temperature information, the PCA will increase the effectiveness of underground storage tank control thereby benefitting not only tank owner, but the public as well.

Sincerely yours,

Lester A. Wilsey, Jr.
President

LAW,JR:amw
cc: James N. Denn, President
Minnesota Trucking Association

RS

Petroleum Marketing Guidance Group

c/o Minnesota Department of Public Service
900 American Center Building
150 East Kellogg Boulevard
Saint Paul, Minnesota 55101

Sample of letter sent to Congressional Delegation.

December 1, 1988

The Honorable Rudy Boschwitz
U.S. Senate
506 Hart Building
Washington, D.C. 20510

Dear Senator Boschwitz:

As Chairman of the Minnesota Petroleum Marketing Guidance Group (PMGG), I would like to inform you of our concern over the impact of federal underground tank regulations on retail gasoline outlets and consumers in rural locations.

The PMGG includes representatives of Minnesota's petroleum marketing and supply industries and serves as an advisory group to the Minnesota Department of Public Service on petroleum supply concerns and other industry issues. At its October 5, 1988 meeting, the PMGG discussed impacts that underground tank requirements will have on retailers and agreed that, in some cases, the impacts in rural areas will be so serious that some form of federal financial assistance may be warranted.

The initial cost of meeting the new underground tank requirements for a typical retail outlets with three tanks will total more than $25,000. The federal Environmental Protection Agency estimates that over 36 percent of current retail outlets will go out of business due to the financial burden imposed by these costs.

One important public concern imposed by these changes is impact on small towns and consumers in rural areas. Many retail outlets that serve these areas are not profitable enough to obtain financing for tank replacement. Many small towns will no longer provide a sufficient market for even a single retail outlet. Thus, consumers will need to drive further and pay more for their gasoline purchases, and small towns will lose businesses crucial to their survival as local retail centers.

These impacts justify the development of financing programs to help rural gasoline retailers meet the regulatory burden imposed by the underground tank rules. We need to establish loan guarantees or revolving funds for rural retailers that can be profitable but cannot obtain adequate financing. Because the underground tank rules are a federal program, national leadership on this issue is warranted.

I encourage you to explore this issue further and help develop some mechanisms for reducing the impact of the tank regulations on rural communities.

Sincerely,

Ken Wingard

Ken Wingard, Chair
Petroleum Marketing Guidance Group

cc: Tony Perpich, Commissioner, MN Department of Public Service
Gerald Willet, Commissioner, MN Pollution Control Agency

Y5104

UNIVERSITY OF MINNESOTA
TWIN CITIES

Laboratory of Environmental Medicine and Pathology
Stone Laboratory I
First Floor
421 29th Avenue S.E.
Minneapolis, Minnesota 55414
(612) 627-4236 and 627-4235

1 December 1988

Gerald L. Willet, Commissioner
Minnesota Pollution Control Agency
520 Lafayette Road
St. Paul, MN 55155

Re: Underground Storage Tank Management

Dear Mr. Willet:

I have received your notice that you are seeking information and opinions from outside sources regarding rule adoption for owners and operators of underground storage tanks.

I do not have material prepared at this time that would directly address this question. However, we do have experience in the problems of the use of hazardous substances in enclosed spaces and would be most pleased to review any specific issues that might require clarification or specific opinion.

Thank you for this notification, and please let us know if we can be of service to MPCA.

Sincerely,

Vincent F. Garry, M.D.

Vincent F. Garry, M.D.
Director
Laboratory of Environmental Medicine & Pathology

VFG:mb

RECEIVED
DEC 05 1988
MINN. POLLUTION CONTROL AGENCY

MINNESOTA TRUCKING ASSOCIATION

– TRUCKS SERVE EVERYONE IN EVERY COMMUNITY –

RECEIVED
DEC 06 88
Hazardous
Division

December 5, 1988

Mr. Thomas P. Clark
MN Pollution Control Agency
Hazardous Waste Division
Tanks and Spills Section
520 Lafayette Road North
St. Paul, MN 55155

Re: Rules For Underground Storage Tank Management

Dear Mr. Clark

We have the Agency's notice soliciting comments on the U.S. Environmental Protection Agency's underground storage tank rules published as Part 280 of Title 40 in the Federal Register on September 23, 1988.

We urge the MPCA to adopt the rules as published. It is our considered opinion that adoption of a single set of standards by all states will enhance compliance by those firms that operate in interstate commerce and maintain facilities (tanks) in the various states.

Thank you for considering our comments. If you need anything further, please contact me.

Sincerely

Andrew A. Piilola
Chief Executive Officer

AP/kal

1821 UNIVERSITY AVENUE • SUITE 134 N. • ST. PAUL, MN 55104 • AREA CODE: 612 646-7351

AMERICAN TRUCKING ASSNS. INC. ATA AFFILIATE

Star Route, Box 216A
Babbitt, Mn. 55706
December 5, 1988

RECEIVED
DEC 06 88
MPCA, Hazardous
Waste Division

Thomas P. Clark, MPCA
Hazardous Waste Division
Tanks and Spills Section
520 Lafayette Road North
St. Paul, Mn. 55155

Dear Mr. Clark:

This is in reply to your letter seeking outside opinion regarding the development of rules for underground storage tank management.

Pertaining to the actual procedure of removal of tanks, I suggest using nylon strapping rather than metal chains, to prevent the possibility of sparking.

Though your brochures state tanks under 1100 gallons are not involved, I suggest investigating for all old commercial tanks not in use, where there is a possibility of cave ins or pollution to the water system.

Locating these could be done by finding the history of the town; checking with town clerks through old records showing where old commercial gas stations existed: Talk to " old timers " in the area who can remember where such gas stations stood and study old photos of areas.

If it wouldn't be possible to dig them up, then use the recommended system of filling them with cement slurry or polyurethane foam.

Yours truly,

Jay Murphy

Jay Murphy

CITY OF SAINT PAUL

OFFICE OF THE CITY COUNCIL

RECEIVED
DEC 01 88
MPCA Hazardous Waste Division

KIKI SONNEN
Councilmember
MOLLY O'ROURKE
Legislative Aide

November 29, 1988

Thomas P. Clark
Minnesota Pollution Control Agency
520 Lafayette Road
St. Paul, Minnesota 55155

Dear Mr. Clark:

Thank you for the opportunity to comment on rules regarding underground storage tank management. I have followed this issue for several years and I believe the state needs tough restrictions in order to protect the environment and public safety.

The Pollution Control Agency's proposal to use federal EPA safeguards seems reasonable.

My question is: Do your rules provide for the option of local enforcement of state standards? Since St. Paul inspects and/or licenses many of the businesses which own or operate underground tanks, I believe state-local cooperation and information-sharing could provide additional benefits to all concerned.

Thank you for your consideration.

Sincerely,

Kiki

KIKI SONNEN
Councilmember

KS/mb

cc: City Councilmembers
Steve Zaccard, Fire Marshal
Joe Carchedi, License Inspector

TELEPHONE (218) 751-5523

APCO 4

COUNTY OIL CO., INC.

DISTRIBUTOR

ROUTE 7, BOX 56 BEMIDJI, MINNESOTA 56601

December 8, 1988

RECEIVED
DEC 12 88
MPCA, Hazardous
Waste Division

Thomas P. Clark, MPCA
Hazardous Waste Division
Tanks & Spills Section
520 Lafayette Road North
St. Paul, MN 55155

Dear Sir:

In response to your latest letter regarding regulations of Underground Storage Tanks, I would like to make the following comments:

I feel that the regulations as they are now are very unfair to the small retailer. Resorts, country stores, small service stations. These people serve a definite need in their community. Their storage tanks are usually 300 gallon, 500 gallon, or 1,000 gallon capacity, filled on a weekly to longer periods of time basis. Yet the regulations, as I understand them, are the same as for a large retail outlet that would have 20 to 50 thousand gallons of storage on premise. These regulations could put most of this type of operation out of business, as they could not afford to follow the updating of the tanks and instalation of equipment that is called for in the new regulations.

SBA has absolutely no programs to help finance the actual small business operator in conforming with new pollution regulations. 5,000-50,000 dollars is a lot to borrow at 13.5%. To qualify for SBA's Pollution Control Funds, you must borrow a few hundred thousand minimum just to be eligable.

The State Pollution Clean up Fund along with Insurance Companies do the small operator very little good. Our State fund has a $10,000 deductible and all Insurance Companies now have $25,000 deductibles. 80% of small operators would be forced out of business before meeting the deductible.

Looking at the above information, how is the small operator going to continue his business?

TELEPHONE (218) 751-5523

APCO

COUNTY OIL CO., INC.

DISTRIBUTOR

ROUTE 7, BOX 56 BEMIDJI, MINNESOTA 56601

Where would guests at resorts get gas if none were available at the resort they stayed at?

Many of these country stores are the only source of petroleum product for ten to twenty miles around!

Some form of consideration must be given to these people and their facilities in the writing of regulations. No one wants to deliberately pollute the environment, but these types of tanks can be monitored by stick readings compared to actual pump meter readings to keep track of product.

Respectfully yours,

Dick L. Lillie

Dick L. Lillie, Pres.

minnesota department of health
717 s.e. delaware st. p.o. box 9441 minneapolis 55440
(612) 623-5000

December 13, 1988

Ms. Beth Lockwood
Tanks and Spills Section
Hazardous Waste Division
Minnesota Pollution Control Agency
520 Lafayette Road North
St. Paul, Minnesota 55155

DEC 19

Dear Ms. Lockwood:

Subject: Notice of Intent to Solicit Outside Opinions Regarding the Development of Regulations Governing the Training and Certification of Storage Tank Installers

This is in response to your request for comments on the training and certification of storage tank installers.

The Minnesota Department of Health supports regulations for training and certification of storage tank installers. The Minnesota Department of Health is particularly concerned that:

1. The installation of monitoring devices which intersect groundwater, placed near storage tanks is regulated by the Minnesota Department of Health. Monitoring wells, piezometers, bore holes or other excavations which do not intersect groundwater are not regulated. Because of the concern for competent design and installation plus groundwater protection, we would recommend that the installation of these monitoring devices be regulated by the Minnesota Pollution Control Agency and that they be installed by certified storage tank installers.

2. We recommend that the Minnesota Pollution Control Agency conduct training on the installation of any monitoring devices. Training should stress proper applications of monitoring to protect the groundwater.

If you have any questions, please contact James Nye at 612/623-5339 or Roman Koch at 612/623-5404.

Sincerely yours,

Gary L. Englund, P.E., Chief
Section of Water Supply and Engineering

GLE:JDN:mr

an equal opportunity employer

HARCO TECHNOLOGIES CORPORATION

1090 ENTERPRISE DRIVE MEDINA, OHIO 44256 (216) 725-6681

July 14, 1987

JUL 16 1987

UST2-1-CO-323

Docket Clerk
Office of Underground Storage Tanks (WH-562A)
Docket UST-2
401 "M" Street, S.W.
Washington, D.C. 20460

Re: Underground Storage Tanks, Proposed Rules

Gentlemen:

Harco Technologies Corporation is an organization specializing in the design, installation, testing and maintenance of cathodic protection systems and, beginning in 1957, was the first such organization to offer systems specially designed for small underground tank protection. Certain studies conducted by Harco have been recognized by the EPA and used as source documents for its proposals. Harco's experience in this field dates back to 1949.

We offer comments and suggestions on specific subjects in separate papers as listed below:

a. Cathodic Protection Effectiveness Criteria and Verification.

b. Comments About Cathodic Protection Frequency of Inspection and Design.

c. Statement in Support of the Qualified Expert Concept.

d. Statement in Support of the "Independence" of the Qualified Expert.

e. Tank Coating Quality.

f. Compatibility of Other Corrosion Mitigtation Schemes with Cathodic Protection.

In addition, we offer comments about certain statements made by the EPA in the proposed rules as published in the Federal Register, April 17, 1987.

Federal Register, Page 12,671:

Third column, penultimate paragraph "Cathodic protection must be monitored . . ." This EPA statement is true and reflects a mandatory requirement. Unfortunately, this sentiment is contrary to the present habits and practices of tank owners at this time and must be overcome.

Continued . . .

Federal Register, Page 12,675:

> Option 1 is desirable but probably not feasible. Option 2 is recommended and feasible. Option 3 is economically wasteful and impractical. In many cases the tanks now in existence in spite of possible corrosion metal loss exceed structural standards of new tanks commercially available today. Mandatory replacement of these tanks would constitute a downgrade rather than an upgrade. Option 4 is a can of worms and invites legal wrangling over class determinations and geographical lines of demarcation.
>
> Impractical Suggestion: Stimulate prompt compliance through the Internal Revenue Code by offering a 10% tax credit for the cost of compliance during the first two years following regulation issuance with decreasing credits each year towards zero at the end of the tenth year. The trade-off of lost revenue vs. cleanup costs would be a national bargain but probably unsalable to legislators.

Federal Register, Page 12,697:

> First column, middle paragraph . . . "The Agency requests comments on the merits of this approach". The Agency can mandate coatings for new tanks in conjunction with cathodic protection, but it should be unnecessary. The economics are overwhelmingly in favor of this combination. The cost of a coating for a new tank is far less than the incremental cost of enhancing the power of a cathodic protection system required for a bare tank over a coated tank. This should not obscure the fact that cathodic protection can adequately protect a bare tank. Obviously, if the tank installation is in existence, it is economically more advantageous to protect "as is" rather than excavate, coat and replace. There is nothing magical about impressed current systems or sacrificial anodes of any particular metal. They are all means to an end. It is D.C. current of sufficient intensity evenly distributed that accomplishes the objective. The means of application are immaterial.

Federal Register, Page 12,699, Internal Corrosion Protection:

> Moisture penetration between overlapped metal plates is to be avoided. Cathodic protection effectiveness for such application is extremely limited and should not be relied upon. It is impossible for protective current to penetrate between the plates. This "third solution" is not actually a solution; however, if these unfortunate conditions exist it is better than nothing.

Federal Register, Page 12,700, Approaches to Regulation:

> We recommend that a program of accreditation for "Qualified Corrosion Expert" be considered. Further remarks in support of this concept are made in an attached separate paper.

Continued . . .

Federal Register, Page 12,698:

Third column, penultimute paragraph ". . . steel piping. . .". The Agency is correct in that new steel piping should be coated and cathodically protected. We would further suggest the prohibition of galvanizing on steel piping. This type of pipe acts for cathodic protection purposes as if it were bare piping. It is also difficult for coatings to adhere to a zinc surface.

Federal Register, Page 12,704:

Second column, first paragraph "All UST . . ." This is unacceptable and we are sure the Agency realizes it. This is a lock-the-door-after-the-horse-leaves-the-barn rule.

Federal Register, Page 12,705:

Last column, last paragraph "EPA has . . .". The statement that impressed current systems for existing tanks are preferred is probably true. This is an economic preference not necessarily a functional preference. As stated previously, it is D.C. current that accomplishes the objective, not its source. We recommend that the Agency not get involved in this engineering determination and leave this analysis to the Independent Qualified Expert.

In the next paragraph, we disagree slightly with the statement that "it is unreasonable to cathodically protect . . . in imminent danger of leaking". If the tank is reconditionable, it <u>is</u> reasonable to cathodically protect it. For your general information, one of your government bretheren is planning to recommend exactly this for his multi-location tank facilities. He proposes to cathodically protect all tanks regardless of whether they might be leaking exempting only known leakers.

Federal Register, Page 12,711:

Second column, first paragraph, "Comment is specifically invited..". The debate between the merits of impressed current vs. sacrificial is endless and is an engineering determination which purests would say should be made after examination of <u>each</u> site. We prefer the impressed current specially designed for retrofit situations because it is much easier to adjust, determine if it is operation, and forgiving if a design or installation error is made. But we recommend that the Agency not take a position on the matter.

Federal Register, Page 12,766:

First column, last paragraph "A particularly important . . .". We are in full agreement with this assumption.

Continued . . .

We appreciate the opportunity to submit this information and are available for further development of these issues if requested.

Very truly yours,

HARCO TECHNOLOGIES CORPORATION

Russell J. Stambaugh

nh

enc.

CATHODIC PROTECTION EFFECTIVENESS CRITERIA AND VERIFICATION

The purpose of this statement is to discuss the feasibility of expanding the definition of the term "cathodic protection" for the purpose of improving system reliability and effectiveness.

The definition of "cathodic protection" is presently a performance specification described in 280.31(e). In our comments about "Qualified Expert" we stated that accepted state-of-the-art methods of testing are not sufficiently precise to prevent a tester from making errors and obtaining inaccurate results. Further, it is possible even with accurate data to misinterpret and reach an incorrect conclusion. Unfortunately, we do not know by what means additions to the regulations can be made to address these concerns. The EPA well appreciates that the standards of what constitutes effective cathodic protection are still in a state of evolution. The EPA made reference to this in the middle column, page 12,787, Federal Register, Vol. 52, No. 74. Presently, we are required to live with these uncertainties.

To reduce uncertainties, we do not recommend the further elaboration of 280.31(e), however, we do recommend the addition of certain cathodic protection features that make system testing and protection verification possible in some cases and less difficult in others. These are:

a. A means of current interruption -- We recommend that all cathodic protection systems have an approved means of current interruption. We

discussed this elsewhere as part of a first step in maintenance troubleshooting. Cathodic protection criteria 280.31(e)2. and 3. cannot be considered without this means available. Every impressed current system intrinsically contains this arrangement; however some galvanic anode arrangements do not.

b. Sensing electrodes -- We recommend that for each tank (or at least one in a group of tanks) a permanent type reference electrode be installed. As mentioned elsewhere potential measurements are not necessarily definitive indications of a certain corrosion activity occurring or not occurring at a given location. A favorable reference electrode potential reading taken at an above tank location does not necessarily indicate a favorable condition on the underside of the tank. Obviously, unless otherwise arranged, test readings using the customary portable test electrode can only be taken at above the tank locations.

Since 95% of all leaks occur on the bottom 18 degrees of a tank, the underside location represents a "worst case" scenario. It is not necessarily comforting to take potential readings above the tank under a best case condition and assure yourself the underside is not corroding. The burying of a sensing device at the tank underside is of importance in determining whether cathodic protection is being achieved.

We therefore recommend that in non-chloride saturated soil environments, permanent type copper/copper sulphate reference electrodes with backfill and suitable length lead wire be placed:

a. For new tanks - beneath and adjacent to the one end of the tank.
b. For existing tanks - between two adjacent tanks at a depth immediately below the midpoints.

For chloride contaminated environments (salt water) we recommend that silver/silver chloride be used instead of copper/copper sulphate.

The sensor location selection for existing tanks is a compromise in deference to the cost of the excavation required to install an electrode underneath the tank.

Discussion:

The means of interrupting current is a "must" in view of the position the regulations have taken as to the appropriate cathodic protection effectiveness criteria; however, the need for a sensing electrode is a subjective decision. We believe that it will be extremely difficult to obtain compliance from unknowledgeable owners no matter how well intentioned without some added means of verifying potentials other than the portable reference electrode. This sensor represents a convenient method for EPA personnel to verify on their own data recorded by the customer in support of this compliance.

COMMENTS ABOUT CATHODIC PROTECTION
FREQUENCY OF INSPECTION AND DESIGN

Paragraph 280.31 b. 1 and 2, Operation and Maintenance of Corrosion Protection

We recommend that all cathodic protection systems comply with 280.31(b)1. and that 280.31(b)2. be eliminated. We find the distinction between field and factory installed cathodic protection to be unwarranted. We further recommend that an annual inspection be performed by or under the supervision of a qualified corrosion engineer (please refer to our recommendations elsewhere about the qualification for being a "Qualified Expert"). It appears the five-year inspection allowance interval is a concession to the alleged superiorities claimed by the Steel Tank Institute. These superiorities do not exist. To support this position, we present the following facts.

1. The Steel Tank Institute (STI) is not a scientific body but a collection of steel tank manufacturers whose avowed purpose is to the sale of steel tanks.

2. The sti-P_3* history of success that STI points to is based upon the use of magnesium galvanic anodes and not the zinc galvanic anodes they now use. Magnesium anodes are twice as powerful as zinc anodes. They were first installed approximately 15 years ago. All magnesium anodes were field installed. The STI experience with factory installed anodes all of which are zinc is only four years old. We feel it is a non-sequitor to claim superiority for a factory installed zinc anode

HARCO
Corporate Headquarters
1060 Enterprise Drive
Medina, Ohio 44256-1328
(216) 725-6991
Telex 980379 HARCO MDNA

system based upon the alleged performance of field installed magnesium anodes.

3. In spite of the claims of a stringent quality control for zinc anodes, in 1986 STI permitted the use of 4,000 anodes that were below their own announced quality standards to be installed.

4. In 1986, testing was performed on a number of older STI designed and installed protective systems by the Steel Tank Institute. The test results were never reported and were misplaced. Allegations are that the test results fell far short of supporting the contentions for effectiveness being made by STI promotional efforts.

5. We have encountered tank cathodic protection systems not complying with 280.31(e) that were alleged to have STI systems installed. In Pennsylvania exists an admitted STI zinc anode type installation tested by two independent corrosion experts at different times who have agreed the system does not meet 280.31(e). This tank installation is now the subject of a lawsuit (j. V. Auto v. Adamson Tank/Midstates Contractors) for this defect and other reasons.

Discussion:

The Steel Tank Institute has allowed their commercial zeal to get well ahead of their limited scientific judgment. It is axiomatic in corrosion engineering that the environment into which a structure is installed is the most important

factor in determining the potential corrosion activity of the metal. The STI sti-P_3* marketing program totally ignores this requirement. For the sake of their commercial advantage, they have promoted a simple inexpensive arrangement of zinc anodes that does not, in our opinion, produce the performance reliability to meet the 280.34(e) criteria with consistency. It is suspected there is considerable humbug in their "scientific" position.

Limitations of Zinc as an Anode Material:

As is well known, zinc anodes are the weakest galvanic anodes and generate a minimum intensity of current. It is economically undesirable in almost all instances to protect a bare steel tank with zinc anodes. To overcome this limitation, the following preconditions must be met:

a. The tank surfaces must be well coated with a dielectric barrier of paint or plastic that adheres firmly to the steel surfaces to effectively reduce the total area of bare steel to be protected.
b. The tank must be insulated from metal piping or other foreign metal objects to prevent the limited current output from bleeding off to other structures.
c. The soil condition must be sufficiently favorable electrically to enable the required current to be generated by the zinc anodes to meet 280.31(e).

From a practical viewpoint, preconditions b. and c. are invariably met but the quality of the paint coating (a.) is another matter. The coating should be abrasion resistant and electronic holiday detected and repaired. Care must

also be taken during installation to prevent scratches in the coating from occurring. These coating holidays almost always are located on the bottom surfaces and are impossible to detect by testing utilizing the present STI design.

Even if the above uncertainties are successfully circumvented, there remains another natural process to contend with. This process is the normal deterioration of paint coating effectiveness with time. As the coating deteriorates, a greater and greater area of bare steel is exposed until the anodes, a source of fixed voltage, cannot generate enough current per unit area (current density) to enable 280.3 4(e) to be met.

Maintenance of Zinc Anode Systems:

It is important to be able to pre-determine when the moment of ineffectiveness will occur, whether one week, one month, one year, ten years after the date of installation. With the present sti-P_3* system design, this is impossible to determine.

When the sti-P_3* system falls below the level of performance required by 280.31(e), as it inevitably will, it is caused by one or more of the following factors:

a. The insulated tank has become "shorted" to other metal members causing protective current to be drained off to other areas.
b. The anodes have ceased to generate current or are operating at reduced

levels.

c. The paint coating has deteriorated to the extent it is exposing too great an area of bare metal for the anode system electric generating capacity to accommodate.

The customary first corrective procedure is to test to determine whether the anodes are generating current. This is accomplished by interrupting the electrical circuit and measuring the current flow. With the STI design, this cannot be done.

RECOMMENDATION -- We therefore recommend that not only STI but all cathodic protection systems be required to have a means for interrupting (or measuring) current output. By reading 280.31(e)2. and 3., this need becomes apparent. We further recommend that the frequency and standards for testing cathodic protection systems be the same for all systems.

*sti-P_3 is a registered trademark of the Steel Tank Institute.

STATEMENT IN SUPPORT OF THE QUALIFIED EXPERT CONCEPT

The purpose of this brief is to urge a further delineation of the term "Qualified Expert". It is our contention that this addition to the regulations will improve the reliability and effectiveness of the CP systems.

The Problem:

Although cathodic protection systems if properly designed, installed, and maintained can reduce external tank leak exposure risk well beyond the 99.9 percentile, the three preconditions stated are not always met. In order to improve the reliability of cathodic protection performance, we recommend the following:

Design and Testing:

We recommend that the design of any system be under the supervision of a person who meets the following four criteria:

1. Is a graduate of an accredited college with a four year degree in an engineering science.
2. Is a National Association of Corrosion Engineers accredited Corrosion Engineer.
3. Is a registered professional engineer in at least one State.
4. Mainfains professional liability insurance in a minimum amount of $50,000.00.

Such a person would be a "Qualified Expert" for the purposes of these regulations.

HARCO Corporate Headquarters
1060 Enterprise Drive
Medina, Ohio 44256-1328
(216) 725-8881

Installation:

We do not recommend the establishment of an installers' licensing system as either necessary or administratively feasible.

Maintenance:

We do not recommend the establishment of regulations for maintenance organizations.

Discussion:

Cathodic protection is more an art than a science. It is a blend of theoretical understanding, engineering skills and field experience. Although there are other defenses against corrosion, they all have the same shortcomings:

a. They can only be applied before the tank is installed.
b. Their effectiveness is limited and deteriorates with time.

Only cathodic protection can be installed on existing as well as new tanks and can maintain its standard of effectiveness without deterioration throughout its life. Whatever shortcomings in the form of design or installation errors occur, they can all be overcome by a proper performing cathodic protection system. It is the first line of defense against the corrosion of underground storage tanks.

No governing body exists which establishes standards for a cathodic protection engineers. Although the National Association of Corrosion Engineers, a trade organization, is moving in that direction through its qualification and accreditation program, its rules and requirements are presently too minimal to be considered effective. We are offering these comments because the standards we suggest are more restrictive than those proposed by the regulations. It is not, however, our intent that field testing personnel meet the above qualifications, but only that their work, when used, be examined and authenticated by a qualified professional who can be held accountable. It is the combination of competency and accountability that we believe will be required to create an effective and enforceable leak prevention program.

Concerns:

Experience with the oil and gas industry has shown that under economic pressure systems will be designed at the margin producing many systems of substandard effectiveness, longevity and realiability. Although the test criteria of 280.31(e) are supposed to prevent this from occurring, it must be remembered that the taking and interpretation of the potential readings are not specific and are themselves subjective in nature easily misinterpreted or manipulated by the tester with the "right" meter and "proper" placement of the reference electrode. The key ingredient for a successful cathodic protection installation is the skill and integrity of the designing engineer and tester. Since there is no other authoritative body, it would not be out of the question for EPA itself to consider the licensing of cathodic protection designer/testers.

STATEMENT IN SUPPORT OF THE "INDEPENDENCE" OF THE QUALIFIED EXPERT

We have discussed elsewhere our viewpoint that the "Qualified Expert" is the administrative key to assuring proper standards for design and inspection of adequate cathodic protection systems. The question now being addressed as to whether the Qualified Expert should also be independent as stated in 280.31(b) of the Proposed Regulations.

We would believe that such an independence would be highly desirable. The establishment of a third party to mitigate the conflict of viewpoints that inevitably comes with regulation would be easy and certainly speed compliance. To turn loose over a million tank owners to resolve compliance problems with home-developed in-house talent is to invite massive noncompliance no matter how well intentioned the malperformers might be.

The present practical procedure for obtaining cathodic protection for small installations is not reassuring. Most such work is performed by piping contractors and plumbers without knowledge of how to engineer or test cathodic protection systems. Misconceptions abound. Systems are even being installed upon automobiles. Such discretionary latitude is a blueprint for wasted effort and effectiveness.

The most compelling reason for the "independence" of the Qualified Expert is the need for assistance by the EPA itself. It is unreasonable for the EPA to expect that each and every state can quickly get up to speed in skills and

knowledge to implement the cathodic protection portion of the regulation let alone the other regulations. The States do not have the organizations nor the expertise to do anything but stagger towards the objective. We suggest conversations with your bretheren at the Office of Pipeline Safety about their twenty year experiences with the Natural Gas Pipeline Safety Act and the Hazardous Liquid Pipeline Safety Act. We believe they will tell you their primary enforcement problem is the lack of trained inspection personnel. The establishment of an IQE immediately taps a bank of talent whose vested interest is assisting the EPA in implementing the regulations. The possible objection that the IQE represents an unnecessary cost is not valid. The actual waste comes from the dawdling and false starts that come with poorly planned and engineered cathodic protection systems that are unable to meet performance criteria.

Certain major energy companies are requesting they be permitted to utilize in-house expertise. There is no question that such qualified expertise exists in most cases. However, history has shown that these companies have not permitted such expertise to be used to address the leakage problem. Harco has been offering systems for small tanks since the 1950s, longer than any other company, and have met with considerable indifference to the problem on the part of knowlegeable owners. We believe that to grant this request in all cases will have the effect of impeding compliance with the proposed regulations.

However, under one set of conditions we can visualize that such a special variance would have a positive effect upon compliance. Such a condition would

occur if:

a. The petitioner owned a large number of underground tanks, i.e., 1,000 sites or more, and

b. The petitioner agreed to centralize responsibility and maintenance records at one location.

Most owners of numerous tanks are companies that have decentralized their operations to the extent that for maintenance purposes they operate as if they were many smaller organizations. This diffusion of responsibility complicates the task of compliance inspection. The establishment of a separate centralized authority would tend to ensure that compliance with EPA regulations would receive its proper attention in the petitioner's order of priorities. The theory is that an employee whose primary function is EPA regulation compliance is far more likely to given attention to the leakage problem than an employee whose EPA responsibilities are peripheral to his primary employment purpose.

It is noted that there is some concern that there are perhaps too few qualified experts let alone independent qualified experts to accomplish the cathodic protection objectives of these regulations. This is not so. There is an ample number of experts who meet our proposed qualification standards. We wish it weren't so.

RECOMMENDATION: Keep the independence.

TANK COATING QUALITY

Comments made about the desirability of exempting certain coatings from the cathodic protection requirement.

It is axiomatic that for tank coatings to be effective physical and dielectric shields, they must bond firmly to the tank surfaces. There are various schemes to cause coatings to adhere firmly, the merits of which this statement does not intend to address. What we do wish to assert is that some bonding systems are better than others, all are subject to variations by reason of quality control and all eventually deteriorate in service. At some point in time they no longer adhere.

CLADDING IS NOT SPECIAL

Much has been made in the regulations of the merits of cladding, suggesting that these merits should exempt it from the requirements for cathodic protection. It is our position that there is nothing special about cladding. It is a high quality method of adherance with a limited life subject to the same process of deterioration as is applicable to all coatings. As such, it should not be exempt from the requirements of working in conjunction with cathodic protection. In fact, the paradox is that because of its quality, there is all the more reason to require cathodic protection.

COATINGS AND CATHODIC PROTECTION WORK TOGETHER

The paradox is this. The better the quality of coating on a tank surface the sooner the first leak will occur. This is because corrosion concentrates

at the pin holes in the coating and causes a faster penetration through the metal then would otherwise occur. When compared with a bare tank under like conditions, a coating greatly reduces the overall corrosion but also greatly concentrates the corrosion attack. Corrosion isn't the problem that creates leaking tanks, it is the concentration of the corrosion that is the problem.

COST OF CATHODIC PROTECTION IS MINOR

This issue of exempting clad tanks from cathodic protection is an economic non-issue. The cost of a cathodic protection system to protect a tank using a quality clad coating is small since such a system can be extremely weak. The sti-P_3* system promoted by the Steel Tank Institute is just such a system. Such a system shouldn't add $400.00 to the cost of the tank.

THE PERFECT COATING HAS YET TO BE DEVELOPED

Claims of service immortality by the clad process are unsubstantiated. The hundred years' experience of the pipeline industry is that there is no perfect coating.

RECOMMENDATION -- All coated tanks be required to be cathodically protected.

COMPATIBILITY OF OTHER CORROSION MITIGATION SCHEMES WITH CATHODIC PROTECTION

The cathodic protection process requires that the protective current enter the underground storage tank relatively evenly over its surfaces from the corroding medium (earth, water). This current discharges into the corroding environment through metallic elements called "anodes". Should, for some reason, an anode become encased in a dielectric shield, a high resistance electrical barrier is created between the anode and the tank. Under this condition, little current can pass and no protection could be afforded. In like manner, should a dielectric shield surround the tank, no current can pass and any cathodic protection system becomes ineffective. To express it succinctly, any dielectric barrier between the anodes and the tank blocks the flow of current and the cathodic protection process.

Certain secondary containment schemes promote loose fitting plastic envelopes around the tank called "liners". These plastic liners are high dielectric shields. The theory is that these "bags" will contain spills from the tanks and avoid contamination. We do not wish to address the merits as to the effectiveness or longevity of these schemes, but we do urge that they be outlawed and avoided. Once such a device is in place, cathodic protection becomes impossible.

Placing a dielectric shield around a tank to mitigate corrosion is an accepted and effective practice, but these cannot be loose fitting. Coatings, of

course, are such a shield. To be effective this type of shield must adhere firmly to the tank surfaces. In time, all coatings deteriorate. Since coatings characteristically deteriorate in the form of small pieces and not in sheet form, they constitute no impediment to the cathodic protection process. Plastic bags and tapes however, do disbond in sheet form. These sheets separate from the tank, allow corrosion causing moisture to penetrate behind, and block cathodic protection from being applied. The prohibition of tape is a moot requirement since the taping of a tank surface is not a reasonable application for this type of product.

RECOMMENDATION -- No plastic (dielectric) liners be permitted for the purpose of secondary containment.

DRAFT

INTERIM REPORT IV
TANK CORROSION STUDY
EPA ASSISTANCE ID NO. X-813761-01-0

BY

JAMES H. PIM, P.E.
SUFFOLK COUNTY DEPARTMENT OF HEALTH SERVICES
FARMINGVILLE, NEW YORK

MARCH 1, 1988

FOR

OFFICE OF UNDERGROUND STORAGE TANKS
UNITED STATES ENVIRONMENTAL PROTECTION AGENCY
401 M STREET, S.W.
WASHINGTON, D.C. 20460

ATTENTION: MR. DAVID O'BRIEN

TANK CORROSION STUDY - INTERIM REPORT IV

DRAFT

Introduction

The Tank Corrosion Study was conceived as a means of gathering information about old steel tanks and the nature of the corrosion that plagues them, by observing them closely as they are removed from the ground for disposal. Suffolk County was chosen for the study because a large number of tanks are being removed in a relatively short time to meet the requirements of a local tank replacement ordinance.

This report covers the observations made on the first 320 tanks of the study spanning the time from February 24, 1987 to February 29, 1988. The removal rate has been substantially slower than anticipated and, therefore, it is not known how many tanks will be eventually included in the study. The goal was 500.

This is the fourth interim report. The first was issued on July 31, 1987 and covered the first 100 tanks. The second was on November 10, 1987 and covered 200 tanks. The third was a short special report covering just heating oil tanks.

Procedure

Where tanks are removed or abandoned, the county must be notified beforehand. The attached sheet (Appendix A) describes the abandonment procedures followed.

Nearly every tank that has been abandoned during the study period has been examined and is included in the statistics. Two Health Department sanitarians are still assigned to accomplish this and have become quite adept at it.

An inspection information sheet is filled out by the inspector for each tank during the inspection, a copy of which is attached as Appendix B. The information is then computerized to create a useable data base.

While the tank is being excavated, the process is observed and notes taken on the condition of the backfill and any evidence of leakage or spillage.

When the tank is removed, it is set on the surface near the excavation and thoroughly cleaned of clinging dirt and scale by the inspector and then very carefully inspected visually for any evidence of perforations. If any are found, they are examined closely and a determination is made as to the type of corrosion, internal or external. Information is taken as to the size, location and number of perforations and any unusual conditions described. The tank is measured for original dimensions and the plate thickness measured with an ultrasonic testor.

DRAFT

The ends are then cut out of the tank by the contractor using a pneumatic nipper. The interior is cleaned of all remaining sludge and note is made of the volume. This material is handled as hazardous waste by an industrial waste scavenger.

After the tank is cleaned and vented reasonably well, the sanitarian inspects the interior from the end holes using a light. Perforations can be seen as points of light in the dark interior and these are checked against the information form the outside. The condition of interior corrosion is described and any unusual conditions noted.

It has proved nearly impossible to get useful deflection readings on the old tanks due to problems of stuck caps, remote fills, drop tubes and scheduling. However, the effort has not been abandoned and it still may be possible to get some of the remaining tanks.

Warning

Tank abandonment is dangerous. During the time of this study, there have been several explosions of tanks and fires which fortunately only resulted in two cases of minor injury. All accidents have been caused by extreme carelessness on the part of the individuals working on the tanks. They have always resulted from the use of torches or abrasive cutting machines on tanks where they should not have been used. Some contractors are notoriously careless and should probably be controlled by license.

Statistics

Number of tanks inspected			320
Number of facilities			124
Number of tanks with holes			99
Percent of tanks with holes			31
Average number of tanks being removed per facility			2.58
Cause of peforations:			
external corrosion	75	=	75.7%
internal corrosion	7	=	7.1%
combination internal/external	13	=	13.1%
weld failure	3	=	3.0%
Types of corrosion causing perforations:			
external:			
point	71		
general	3		
internal:			
point	5		
general	2		

DRAFT

Statistics (continued)

Number of perforated tanks that showed evidence of having leaked product	51
Percent of perforated tanks that apparently leaked product	51.5%
Percent of total tanks that apparently leaked product	15.9%

Tank Contents

Material	All Tanks	% of All Tanks	Perf. Tanks	% of Perf. Tanks	% of GASOLINE TANKS PERF
Gasoline	139	= 43.4%	45	= 45.5%	32.3%
#2 fuel oil	94	= 29.4	30	= 30.3	32.0
Waste Oil	24	= 7.5	6	= 6.0	25.0
Diesel	20	= 6.3	6	= 6.0	30.0
Kerosene	8	= 2.5	2	= 2.0	25.0
Solvents	10	= 3.1	6	= 6.0	60.0
#4 fuel oil	9	= 2.8	1	= 1.0	
Aviation fuel	3	= 1.0	-	= -	
#6 fuel oil	2	= .6	-	= -	
Transmission oil	1	= .3	1	= 1.0	
Bulk oil	1	= .3	1	= 1.0	
Caustic soda	2	= .6	-	= -	
Sodium Hypo-chlorite	1	= .3	1	= 1.0	
Oil/water mix	3	= .3	-	= -	
Unknown	1	= 1.0	-	= -	
Jet fuel	2	= .6	-	= -	
TOTALS	320		99		

Age of Tanks

Age in Years	Tanks w/holes	All Tanks
57	1	1
55	1	1
50	1	1
47	-	1
46	-	1
44	1	12
41	-	1
40	1	4
37	-	1
36	-	1
35	-	3
34	-	1
33	1	2
32	-	6
31	-	5
30	4	9
29	-	3
28	1	8
27	6	12
26	16	18
25	-	4

DRAFT

Age of Tanks (continued)

Age in Years	Tanks w/holes	All Tanks
24	1	8
23	4	16
22	1	10
21	2	7
20	1	12
19	9	14
18	3	5
17	9	23
16	11	19
15	3	13
14	5	12
13	1	10
12	-	5
11	1	2
10	2	21
9	-	3
8	1	4
7	-	4
Unkown	12	36
TOTALS	99	319

28.0%

Groundwater Level

	All Tanks	% of All Tanks	Perf. Tanks	% of Perf. Tanks	
Tank always in groundwater	33	= 10.3%	9	= 9.1%	27.0%
Tank sometimes in groundwater	25	= 7.8	14	= 14.1	56.0
Tank never in groundwater	244	= 76.3	68	= 68.7	27.0
Groundwater level unknown	18	= 5.6	8	= 8.0	

Tank Volumes

Volume	All Tanks	Perf. Tanks	% of each size which are perf.
175	1	-	= -
275	10	4	= 40.0%
315	1	-	= -
500	3	-	= -
550	23	8	= 34.8
575	1	-	= -
1000	36	20	= 55.6
1100	1	-	= -
1500	7	2	= 28.6
2000	57	28	= 49.1
2500	4	-	= -
3000	44	17	= 38.6
3500	1	-	= -
4000	43	14	= 32.5

DRAFT

Tank Volumes (continued)

Volume	All Tanks	Perf. Tanks		% of each size which are perf.
5000	22	4	=	18.2
6000	10	-	=	-
7500	5	-	=	-
8000	5	-	=	-
10000	21	-	=	-
12000	3	1	=	33.3
15000	5	-	=	-
20000	4	-	=	-
25000	8	-	=	-
30000	2	-	=	-
50000	2	-	=	-
Unknown	1	-	=	-
TOTALS	320	99		

WRA

Warren Rogers Associates, Inc.
65 Bellevue Avenue, Newport, Rhode Island 02840 (401) 846-4747

Leaks Induced by Internal Corrosion In Steel Tanks - Executive Summary

Internal corrosion in steel tanks is second only to external corrosion as the most common cause of steel tank failure due to perforation. It is generally accepted that internal corrosion is caused by galvanic action. This occurs when dissimilar metal surfaces at different places in the tank interior are linked electrically by water. One way in which this can come about is when gauge stick impact and scrubbing action by incoming product combine to create a clean metal area under a fill tube. This area then becomes anodic to scale metal in other parts of the tank. The two are electrically linked by water precipitated from the stored product. The corrosion process is accelerated if salt water is present in the tank. This can occur in sea coast areas as humid salt air condenses within the tank.

Internal corrosion can be ameliorated but not eliminated in new tanks by installing splash plates. This eliminates the gauge stick problem but has no effect on other potential galvanic effects which are inherent in steel structures. Other than lining the interior of the tanks, it is not clear how the problem can be avoided completely.

In the course of this investigation we analyzed 1,900 tanks where there had been recorded instances of leakage (see Figure 1). Of all the leaking tanks we have investigated 29% or 550 had holes due to internal corrosion. Internal corrosion can be distinguished visually from external corrosion by the shape of the perforations. 10% of the leaking tanks had perforations from internal corrosion only. An additional 19% of the leaking tanks had internal corrosion perforations in combination with external corrosion perforations.

The overall average age of the tanks with internal corrosion perforations was 18.7 years when our observations were made. Figure 2 displays averages broken down by region. The makeup of the 6 regions is also noted.

As in the case of leaks induced by external corrosion, average ages should be treated with caution. National averages may or may not apply to a specific tank or group of tanks. Figure 3 displays frequencies of occurrence by age. Note that 12.8% occurred on or before 10 years, 37.3% on or before 15 years and 66.0% occurred on or before 20 years.

WRA

Warren Rogers Associates, Inc.
65 Bellevue Avenue, Newport, Rhode Island 02840 (401) 846-4747

Warren Rogers Credentials

Dr. Warren Rogers is President of Warren Rogers Associates, Inc., Newport, RI.. He has worked with the United States Environmental Protection Agency to analyze the magnitude of the current underground tank leakage problem.

Dr. Rogers has been a consultant to several of the nation's largest oil companies, working with them to inspect sites, report findings, predict mean age to leak by site, and make recommendations for remedial action.

He has also been retained by insurance companies to provide tank data for their use in evaluating underwriting risks and policy coverage. In addition, he has assisted chemical processors and fleet operators in developing their corporate tank integrity programs.

Education

Ph.D. - Stanford University, Mathematical Statics - 1969

B.S. - U. S. Naval Post-graduate School, Operations Research with highest distinction - 1965

B.M.E. - University of Dublin

Publications

-"Statistical Analysis of Time of Leak of Various Gasoline Storage Tanks," - American Petroleum Institute.

-"Economic Impact of Proposed Provisions to Regulations Governing Oil and Gas Development on the Outer Continental Shelf", American Petroleum Institute.

-"A Decision Model for Underground Storage Facilities", Chevron Corporation

-"Maximum Likelihood Estimation of Detection Probabilities with Unknown Numbers of Targets", Center For Naval Analyses.

-"Maximum Likelihood Estimates of Detection Probabilities When the Number of Contact Opportunities is Unknown", Center For Naval Analyses.

WRA

Warren Rogers Associates, Inc.
65 Bellevue Avenue, Newport, Rhode Island 02840 (401) 846-4747

Warren Rogers' Methodology

Warren Rogers' procedure in determining the frequency of steel tank leakage due to internal corrosion was as follows:

. Since 1980 Warren Rogers Associates and various subcontractors have physically inspected over 15,000 service station sites.

. The sites have been located throughout Canada and in all 50 United States.

. All 45,000 - 50,000 tanks involved were made of unprotected steel. (No STIP3 or FRP coated tanks were included). The tanks ranged in capacity from 2,000 to 16,000 gallons and in age from 2 years to 50 years.

. At each site the soil was tested for pH, resistivity, water, and sulfide content.

. The site was also inspected for sources of stray DC or high voltage AC current or any other corrosion inducing conditions such as electric railroads, cathodically protected structures or landfill in the area.

. The proximity to drinking or navigable water, basement or utility manholes was also noted, which gave some indication of the exposure to potential liabilities.

There were 1,900 instances of reported leakage where a detailed description of the tank condition was provided. All 1,900 of these tanks were actually exhumed and inspected. The frequency of leakage due to internal corrosion was determined by analyzing this data. Internal corrosion was distinguished from external corrosion in some cases by entering the tank and in others by closely examining the perforation to determine the shape of the cone, hence the origin of the corrosion.

Although the sample was not randomly selected the 1900 tanks are adequate to statistically extrapolate these findings to the total national tank population with a high confidence factor.

1900 Recorded Instances of Tank Leakage
(% by Cause)

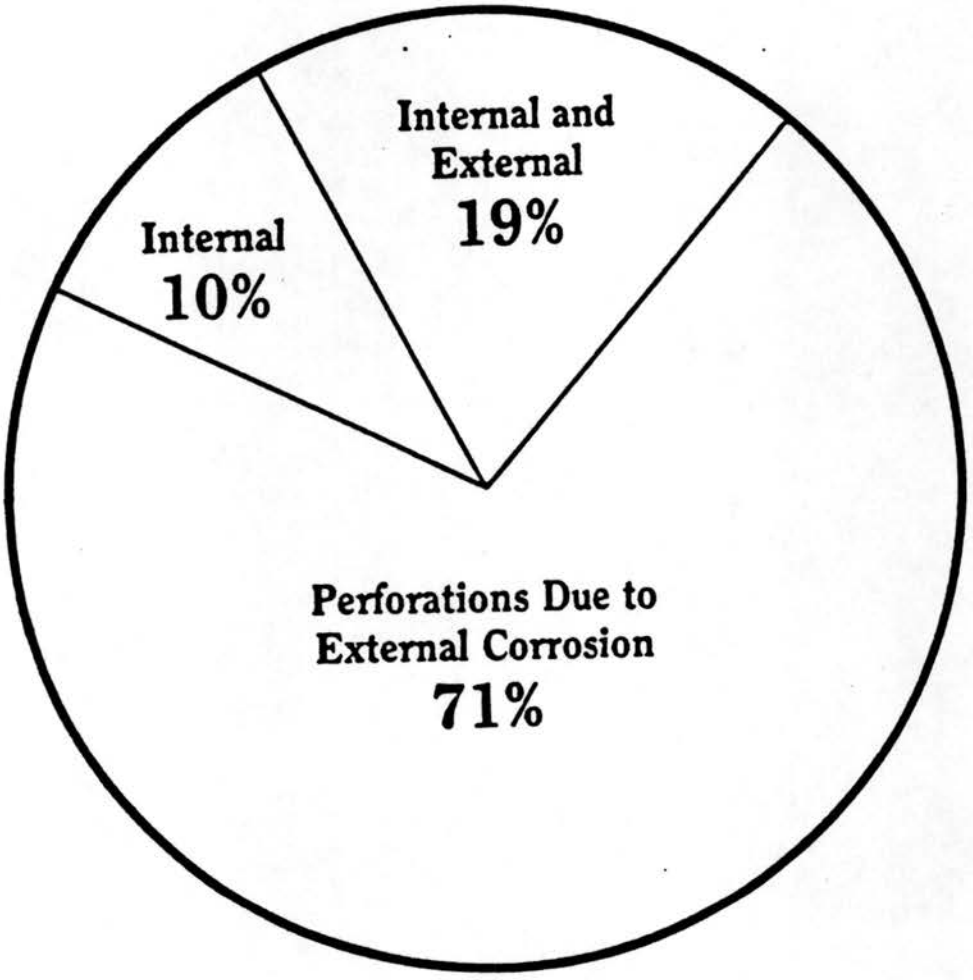

Fig. 1
Source: Warren Rogers Assoc., Inc.

Internal Corrosion Leaks

(Average Tank Age When Observed to be Leaking Due to Internal Corrosion)

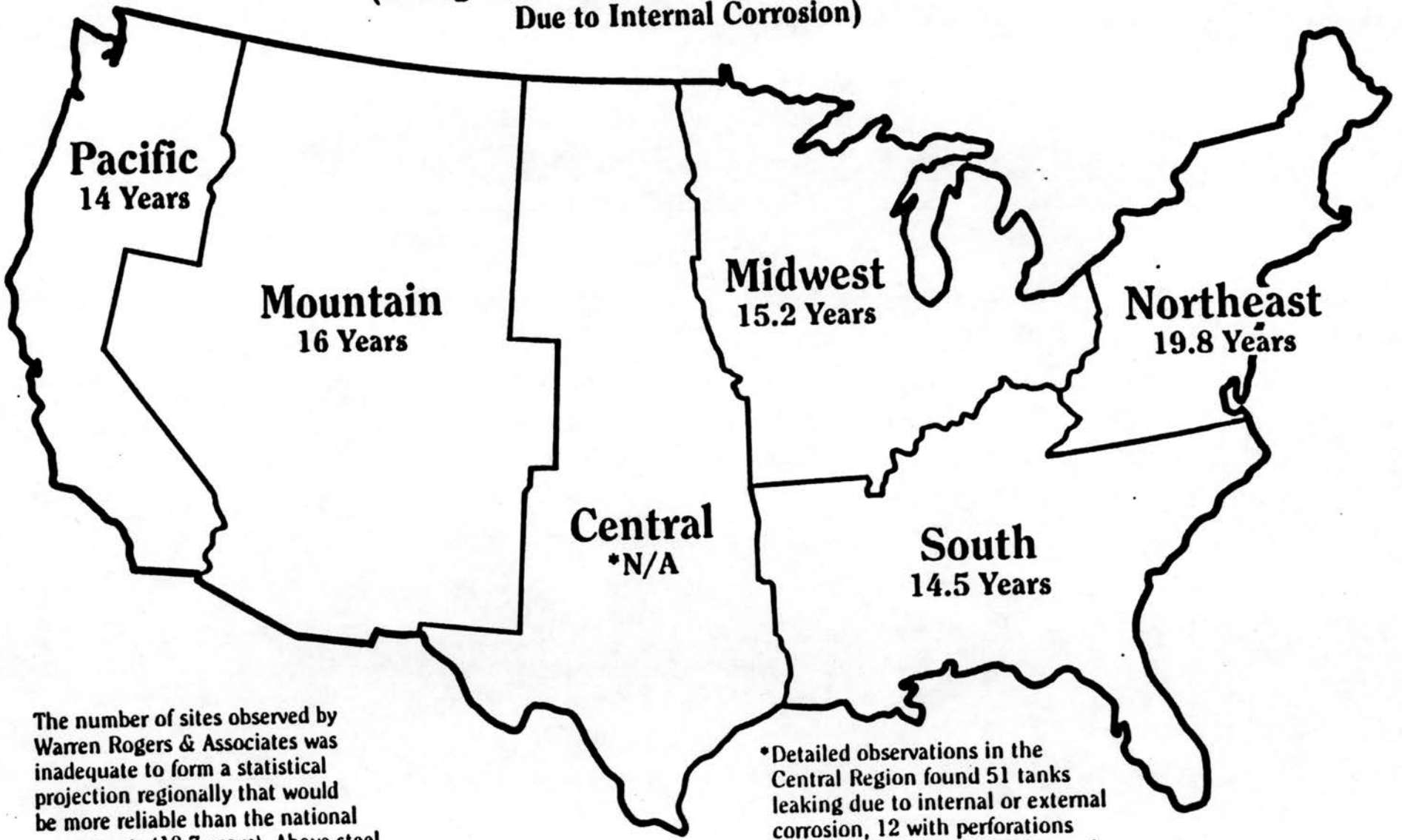

The number of sites observed by Warren Rogers & Associates was inadequate to form a statistical projection regionally that would be more reliable than the national average age (18.7 years). Above steel tank ages represent actual regional averages from the 1900 observations discussed in this report.

*Detailed observations in the Central Region found 51 tanks leaking due to internal or external corrosion, 12 with perforations due to both internal and external corrosion and 1 with only internally induced leakage. This latter tank failed in 7 years.

Fig. 2
Source: Warren Rogers Assoc., Inc.

Age of Internal Leakers

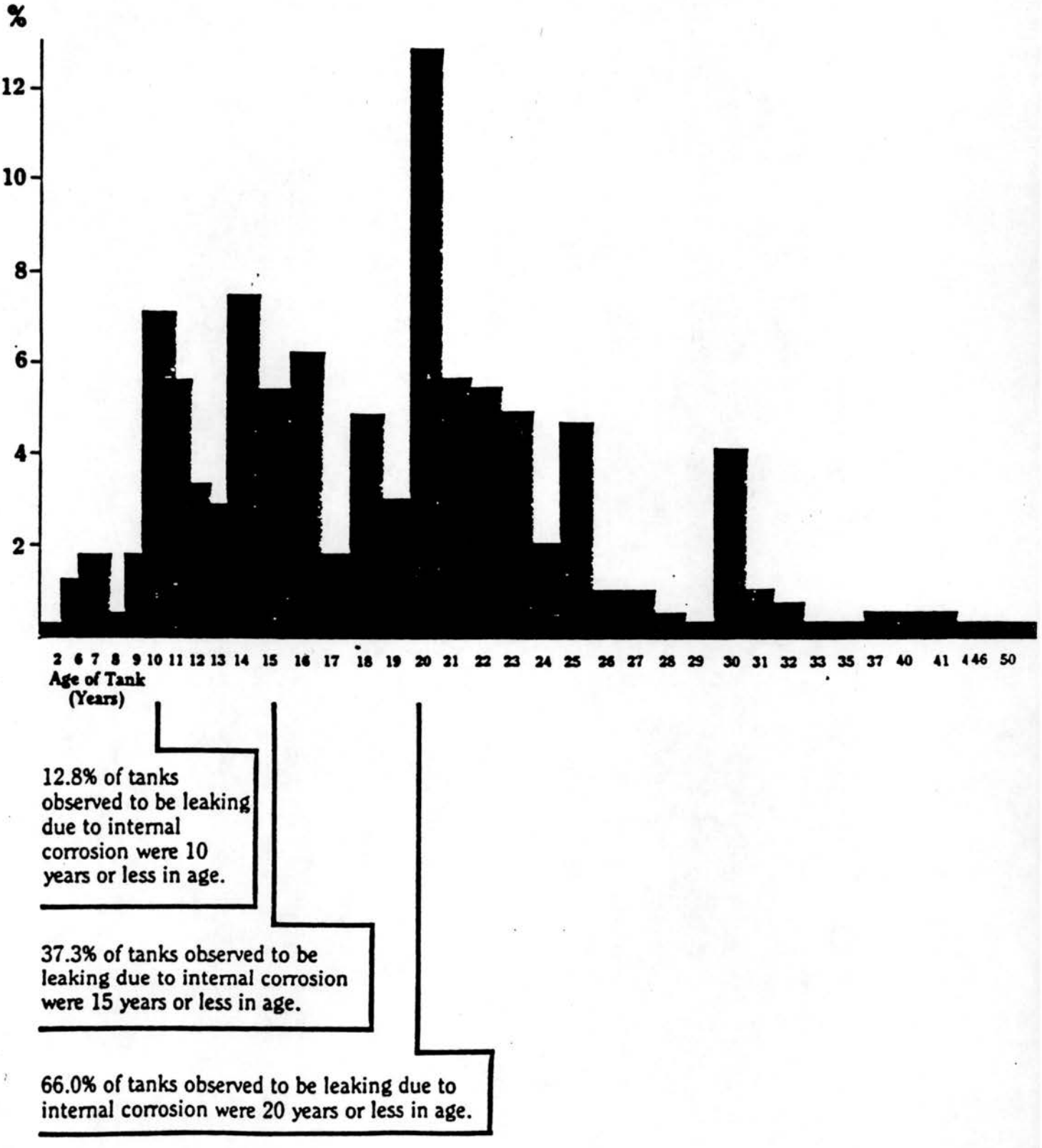

Fig. 3
Source: Warren Rogers Assoc.. Inc.

Northern States Power Company

414 Nicollet Mall
Minneapolis, Minnesota 55401
Telephone (612) 330-5500

January 6, 1989

Thomas P. Clark
Hazardous Waste Division
Tanks and Spills Section
Minnesota Pollution Control Agency
520 Lafayette Road
St. Paul, Minnesota 55155

RECEIVED
JAN 09 89
MPCA, Hazardous
Waste Division

Re: Underground Storage Tank Management
Development of State Rules

Northern States Power Company (NSP) is an electric utility with approximately 80 underground storage tanks (UST's) storing primarily fuel oils and gasoline. Pursuant to the MPCA's request for outside opinion, NSP is taking this opportunity to comment on the development of state rules for underground storage tank management.

It is NSP's opinion that the recently issued final EPA rules (40 CFR 280) on underground storage tank technical standards and corrective action requirements sufficiently address present and potential problems with underground storage tanks as well as the implementation of spill prevention and corrective measures. The rules represent a good synthesis of affected and interested parties' expertise and concerns.

We recommend adopting the EPA rule on UST technical requirements (40 CFR 280) as written to avoid the confusion in compliance by UST owners/operators when a state rule with differing requirements follows a final federal rule.

The state rule would apply to the state UST universe, which is more inclusive than the federal UST universe, ensuring the additional protection to tanks presently not regulated at the federal level.

If a state rule similar to the federal rule is not adopted and more stringent state rules are adopted, then underground storage tanks (UST's) installed, upgraded, or closed per federal rules prior to the effective date of any additional state requirements should be exempt from the additional state requirements.

Thank you for the opportunity to comment. If there are any questions, please call me at 330-6625.

Jim Bodensteiner
Assoc. Regulatory Analyst

cc: ERAD Record Center
L W Eberley
R D Clough
D B Palmquist

CERTIFICATE OF AGENCY'S AUTHORIZING RESOLUTION

I, Barbara Lindsey Sims, do hereby certify that I am the Acting Commissioner of the Minnesota Pollution Control Agency, an agency duly authorized under the laws of the state of Minnesota, and that the following is a true, complete, and correct copy of the resolution adopted at a meeting of the Minnesota Pollution Control Agency duly and properly called and held on the 22nd day of January, 1991, that a quorum was present at said meeting, that a majority of those present voted for the resolution and that said resolution will be set forth in the minutes of said meeting and has not been rescinded or modified:

BE IT RESOLVED, that the Commissioner of the Minnesota Pollution Control Agency is hereby granted the authority to sign and give notice of the Minnesota Pollutin Control Agency's intent to withdraw proposed Technical Standards and Corrective Action Requirements for Underground Storage Tanks, Minn. Rules pts. 7150.0010 through 7150.0700.

BE IT FURTHER RESOLVED, that the Commissioner is hereby granted the authority to sign and give notice of the Minnesota Pollution Control Agency's intent to adopt, without a public hearing, the attached proposed permanent rules relating to underground storage tanks, Minn. Rules pts. 7150.0010 through 7150.0500, to all persons who have registered their names with the Minnesota Pollution Control Agency for that purpose and publish the notice and rules in the State Register, and to perform any acts incidental thereto, including making any form changes to the rules that the Revisor of Statutes requires the Minnesota Pollution Control Agency to make in order to obtain the Revisor's certification as required by Minn. Stat. § 14.07, subd. 2 (1990).

BE IT FURTHER RESOLVED, that in the event a public hearing becomes necessary, the Commissioner is hereby granted the authority and directed to call a hearing for the purpose of promulgating said rules as well as to perform any and all acts incidental thereto, including but not limited to signing an Order for and Notice of Hearing, as well as acting as the Minnesota Pollution Control Agency's representative at all hearings.

IN WITNESS WHEREOF, I hereunto subscribed my name this 30 day of January, 1991.

Barbara Lindsey Sims

Barbara Lindsey Sims
Acting Commissioner

A. the rationale for the rule in question can be met or exceeded by the specified alternative practices or measures;

B. adherence to the rule would impose an undue burden on the petitioner; and

C. the granting of the variance will not adversely affect the public welfare.

Subp. 4. **Variances; compliance.** Any petitioner who is granted a variance shall comply with the alternative practices or measures specified in the application for the variance.

Subp. 5. **Variance; renewal, reporting, and revocation.** A variance shall be renewed upon reapplication according to the procedure described in subpart 3 if the circumstances justifying its granting continue to exist. Any petitioner who has been granted a variance shall immediately notify the board of any material change in circumstances which justify the granting of the variance. A variance shall be revoked if a material change in the circumstances which justify its granting occurs.

Subp. 6. **Burden of proof.** The burden of proof is upon the petitioner to demonstrate to the board that the requirements in subparts 1 and 3 have been met.

Subp. 7. **Statement of reasons.** The minutes of any meeting at which a waiver or variance is granted, denied, renewed, or revoked shall include the reason for the action.

REPEALER. *Minnesota Rules*, parts 6900.0010, subparts 2 and 3; 6900.0030; and 6900.0300, subpart 5, are repealed.

Pollution Control Agency

Proposed Permanent Rules Relating to Underground Storage Tanks

Notice of Intent to Adopt Rules Without a Public Hearing

NOTICE IS HEREBY GIVEN that the Minnesota Pollution Control Agency (MPCA) intends to adopt the above-entitled rules without a public hearing following the procedures set forth in the Administrative Procedures Act for adopting rules without a public hearing in *Minnesota Statutes* §§ 14.22 to 14.28 (1990). The MPCA's authority to adopt the rule is set forth in *Minnesota Statutes* § 116.49 (1990).

This is the second notice provided by the MPCA regarding the proposed adoption of these rules. The first notice was published in the *State Register* on July 30, 1990, (15 S. R. 264). The MPCA has issued an Order Withdrawing the Proposed Rules Relating to Technical Standards and Corrective Action Requirements for Underground Storage Tanks, *Minnesota Rules* pts. 7150.0010 through 7150.0700 as originally ntoiced, under the Withdrawn Rules Chapter in this *State Register.* The MPCA is renoticing *Minnesota Rules* pts. 7150.0010 through 7150.0350 and pts. 7150.0600 through 7150.0700 as originally noticed as Proposed Rules Relating to Technical Standards for Underground Storage Tanks, *Minnesota Rules* pts. 7150.0010 through 7150.0500. Copies of last July's notice can be obtained from county libraries or from the Minnesota Bookstore (612/297-3000).

As a result of comments received during the first notice period, the MPCA has met with representatives of the affected parties and several issues relating to the technical standards portion of the rule as originally noticed were resolved and have been incorporated as minor changes to the proposed rule as published.

The MPCA believes that, although amended corrective action criteria could probably be added to the proposed rules as originally noticed, additional time will be required to develop the necessary language. In addition, the modifications could be construed as a substantial change, and adoption of the technical standards could be significantly delayed. Correction action rules will be proposed at a later time.

All persons have until 4:30 p.m. on March 21, 1991, to submit comments in support of or in opposition to the proposed rules or any part or subpart of the rules. Comment is encouraged. Each comment should identify the portion of the proposed rules addressed, the reason for the comment, and any change proposed.

Any person may make a written request for a public hearing on the rules within the comment period. If 25 or more persons submit a written request for a public hearing within the comment period, a public hearing will be held unless a sufficient number withdraw their requests in writing. Any person requesting a public hearing must state his or her name and address, and is encouraged to identify the portion of the proposed rules addressed, the reason for the request and any change proposed. If a public hearing is required, the MPCA will proceed pursuant to *Minnesota Statutes* §§ 14.131 through 14.20 (1990).

KEY: PROPOSED RULES SECTION — Underlining indicates additions to existing rule language. ~~Strike outs~~ indicate deletions from existing rule language. If a proposed rule is totally new, it is designated "all new material." **ADOPTED RULES SECTION** — Underlining indicates additions to proposed rule language. ~~Strike outs~~ indicate deletions from proposed rule language.

Comments or written requests for a public hearing must be submitted to:

Thomas P. Clark
Minnesota Pollution Control Agency
Tanks and Spills Section
Hazardous Waste Division
520 Lafayette Road North
St. Paul, Minnesota 55155
612/643-3409

The proposed rules may be modified if the modifications are supported by data and views submitted to the MPCA and do not result in a substantial change in the proposed rules as noticed.

The proposed rules, if adopted, will establish technical standards and safeguards necessary to protect human health, safety and the environment and include the following areas: 1) design, construction, installation and notification of underground storage tank systems; 2) general operating requirements; 3) release detection requirements; and 4) closure of underground storage tank systems. Regulated substances include petroleum products as well as certain hazardous materials. One free copy of the rules is available upon request from Tom Clark at the address and telephone number stated above.

A STATEMENT OF NEED AND REASONABLENESS that describes the need for and reasonableness of each provision of the proposed rules and identifies the data and information relied upon to support the proposed rules has been prepared and is available at the above address.

YOU ARE HEREBY ADVISED, pursuant to *Minnesota Statutes* § 13.115 (1990), "Small Business Considerations in Rulemaking," that the proposed rules will have a minimal effect on small businesses. In drafting the proposed rules, the MPCA considered the potential impact on small businesses. A discussion of these considerations can be found in the Statement of Need and Reasonableness.

If no hearing is required, upon adoption of the rules, the rules and the required supporting documents will be submitted to the Attorney General for review as to legality and form to the extent form relates to legality. Any person may request notification of the date of submission to the Attorney General. Persons who wish to be advised of the submission of this material to the Attorney General, or who wish to receive a copy of the rule as adopted, must submit a written request to Tom Clark of the Tanks and Spills Section at the above address.

Charles W. Williams
Commissioner

Rules as Proposed (all new material)

PROGRAM SCOPE AND INTERIM STANDARDS

7150.0010 APPLICABILITY.

Subpart 1. **Scope.** The requirements of this chapter apply to all owners and operators of an underground storage tank system as defined in part 7150.0030, except as otherwise provided in this subpart and subparts 2 and 3. Any underground storage tank system listed in subpart 3 must meet the requirements of part 7150.0020.

Subp. 2. **Exclusions.** The following underground storage tank systems are excluded from the requirements of this chapter:

A. an underground storage tank system holding hazardous wastes listed or identified under chapter 7045 or Code of Federal Regulations, title 40, part 261, or a mixture of such hazardous waste and other regulated substances;

B. a wastewater treatment tank system that is part of a wastewater treatment facility regulated under United States Code, title 33, section 1317 or 1342;

C. equipment or machinery that contains regulated substances for operational purposes such as hydraulic lift tanks and electrical equipment tanks;

D. an underground storage tank system with a capacity of 110 gallons or less;

E. an underground storage tank system that contains a de minimus concentration of regulated substances;

F. an emergency spill or overflow containment underground storage tank system that is expeditiously emptied after use;

G. a farm or residential tank of 1,100 gallons or less capacity used for storing motor fuel for noncommercial purposes;

H. a tank of 1,100 gallons or less capacity used exclusively for storing heating oil for consumptive use on the premises where stored;

I. a septic tank;

J. a pipeline facility, including gathering lines, regulated under United States Code, title 49, chapter 24 or 29;

K. a surface impoundment, pit, pond, or lagoon;

L. a storm water or wastewater collection system;

M. a flow-through process tank; and

N. a storage tank situated in an underground area such as a basement, cellar, mineworking, drift, shaft, or tunnel if the storage tank is located upon or above the surface of the floor.

Subp. 3. **Deferrals.** Parts 7150.0100 to 7150.0440 do not apply to any of the following types of underground storage tank systems:

A. wastewater treatment tank systems;

B. underground storage tank systems containing radioactive material that are regulated under the Atomic Energy Act of 1954, United States Code, title 42, sections 2011 to 2296;

C. an underground storage tank system that is part of an emergency generator system at nuclear power generation facilities regulated by the Nuclear Regulatory Commission under Code of Federal Regulations, title 10, part 50, Appendix A;

D. airport hydrant fuel distribution systems; and

E. underground storage tank systems with field-constructed tanks.

Subp. 4. **Release detection deferrals.** Parts 7150.0300 to 7150.0350 do not apply to an underground storage tank system that stores fuel solely for use by emergency power generators.

Subp. 5. **Heating oil underground storage tank deferrals.** Parts 7150.0100 to 7150.0440, except 7150.0120, subparts 2 and 6, do not apply to an underground storage tank system of over 1,100 gallons capacity used exclusively for storing heating oil for consumptive use on the premises where stored.

7150.0020 INTERIM STANDARDS FOR DEFERRED UNDERGROUND STORAGE TANK SYSTEMS.

Subpart 1. **Interim standards.** No person may install an underground storage tank system listed in part 7150.0010, subparts 3 to 5, for the purpose of storing regulated substances unless the underground storage tank system, whether of single- or double-wall construction:

A. is installed according to requirements of the American Petroleum Institute Bulletin 1615 to the extent applicable, and all manufacturer's recommendations;

B. will prevent releases due to corrosion or structural failure for the operational life of the underground storage tank system;

C. is cathodically protected against corrosion, constructed of noncorrodible material, steel clad with a noncorrodible material, or designed in a manner to prevent the release or threatened release of any stored substance; and

D. is constructed or lined with material that is compatible with the stored substance.

Subp. 2. **Systems without corrosion protection.** Notwithstanding subpart 1, an underground storage tank system without corrosion protection may be installed at a site that is determined by a corrosion expert not to be corrosive enough to cause it to have a release due to corrosion during its operating life. Owners and operators must maintain records that demonstrate compliance with the requirements of this subpart for the remaining life of the tank. The determination required by this subpart must be in accordance with the National Association of Corrosion Engineers, Standard RP-02-85.

7150.0030 DEFINITIONS.

Subpart 1. **Scope.** For the purposes of this chapter, the following terms and abbreviations have the meanings given them. Terms that are not specifically defined have the meanings given them in *Minnesota Statutes*, sections 115.01, 115C.02, and 116.46.

Subp. 2. **Aboveground release.** "Aboveground release" means a release to the surface of the land or to surface water, including, but not limited to, releases from the aboveground part of an underground storage tank system and aboveground releases associated with overfills and transfer operations as the regulated substance moves to or from an underground storage tank system.

Subp. 3. **Agency.** "Agency" means the Minnesota Pollution Control Agency.

Subp. 4. **Appurtenances.** "Appurtenances" means devices such as piping, fittings, flanges, valves, and pumps used to distribute, meter, or control the flow of regulated substances to or from an underground storage tank.

KEY: PROPOSED RULES SECTION — Underlining indicates additions to existing rule language. ~~Strike outs~~ indicate deletions from existing rule language. If a proposed rule is totally new, it is designated "all new material." **ADOPTED RULES SECTION** — Underlining indicates additions to proposed rule language. ~~Strike outs~~ indicate deletions from proposed rule language.

Subp. 5. **Belowground release.** "Belowground release" means a release to the subsurface of the land and to groundwater, including, but not limited to, releases from the belowground parts of an underground storage tank system and belowground releases associated with overfills and transfer operations as the regulated substance moves to or from an underground storage tank.

Subp. 6. **Beneath the surface of the ground.** "Beneath the surface of the ground" means beneath the ground surface or otherwise covered with earthen materials.

Subp. 7. **Cathodic protection.** "Cathodic protection" means using a technique to prevent corrosion of a metal surface by making that surface the cathode of an electrochemical cell. For example, a tank system can be cathodically protected through the application of either galvanic anodes or impressed current.

Subp. 8. **Cathodic protection tester.** "Cathodic protection tester" means a person who can demonstrate an understanding of the principles and measurements of all common types of cathodic protection systems as applied to buried or submerged metal piping and tank systems. At a minimum, such persons must have education and experience in soil resistivity, stray current, structure-to-soil potential, and component electrical isolation measurements of buried metal piping and tank systems.

Subp. 9. **Change in service.** "Change in service" means a permanent removal from service or a change in the reported uses, contents, or ownership of an underground storage tank under *Minnesota Statutes*, section 116.48, subdivision 3, or an upgrade under this chapter.

Subp. 10. **Closure or removal.** "Closure" or "removal" means permanently taking an underground storage tank out of service by either closing it in place, removing it from the ground, or converting it to store a nonregulated substance as required by this chapter.

Subp. 11. **Commissioner.** "Commissioner" means the commissioner of the Minnesota Pollution Control Agency.

Subp. 12. **Compatible.** "Compatible" means the ability of two or more substances to maintain their respective physical and chemical properties upon contact with one another for the design life of the tank system under conditions likely to be encountered in the underground storage tank.

Subp. 13. **Connected piping.** "Connected piping" means underground piping including valves, elbows, joints, flanges, and flexible connectors attached to a tank system through which regulated substances flow. For the purpose of determining how much piping is connected to an individual underground storage tank system, the piping that joins two underground storage tank systems should be allocated equally between them.

Subp. 14. **Consumptive use.** "Consumptive use," with respect to heating oil, means consumed on the premises.

Subp. 15. **Corrosion expert.** "Corrosion expert" means a person who, by reason of thorough knowledge of the physical sciences and the principles of engineering and mathematics acquired by a professional education and related practical experience, is qualified to engage in the practice of corrosion control on buried or submerged metal piping systems and metal tanks. The person must be accredited or certified as being qualified by the National Association of Corrosion Engineers or be a registered professional engineer who has certification or licensing that includes education and experience in corrosion control of buried or submerged metal piping systems and metal tanks.

Subp. 16. **Dielectric material.** "Dielectric material" means a material that does not conduct direct electrical current. Dielectric coatings are used to electrically isolate underground storage tank systems from the surrounding soils. Dielectric bushings are used to electrically isolate parts of the underground storage tank system, for example, tank from piping.

Subp. 17. **Electrical equipment.** "Electrical equipment" means underground equipment that contains dielectric fluid that is necessary for the operation of equipment such as transformers and buried electrical cable.

Subp. 18. **Excavation zone.** "Excavation zone" means the volume containing the tank system and backfill material bounded by the ground surface, walls, and floor of the pit and trenches into which the underground storage tank system is placed at the time of installation.

Subp. 19. **Existing tank system.** "Existing tank system" means a tank system used to contain an accumulation of regulated substances or for which installation began on or before December 22, 1988. However, a tank system containing hazardous materials that is not regulated under Code of Federal Regulations, title 40, part 280, is considered an existing tank system if installation began on or before (insert 90 days after date of adoption). Installation is considered to have begun if:

A. the owner or operator has obtained all federal, state, and local approvals or permits necessary to begin physical construction of the site or installation of the tank system; and

B. either a continuous on-site physical construction or installation program has begun, or the owner or operator has entered into contractual obligations, that cannot be canceled or modified without substantial loss, for physical construction at the site or installation of the tank system to be completed within a reasonable time.

Subp. 20. **Farm tank.** "Farm tank" means a tank located on a tract of land devoted to the production of crops, raising animals, including fish, range land, nurseries with growing operations, and associated residences and improvements. A farm tank must be located on the farm property.

Subp. 21. **Flow-through process tank.** "Flow-through process tank" means a tank that forms an integral part of a production process through which there is a steady, variable, recurring, or intermittent flow of materials during the operation of the process. Flow-through process tanks do not include tanks used for the storage of materials prior to their introduction into the production process or for the storage of finished products or by-products from the production process.

Subp. 22. **Free product.** "Free product" means a regulated substance that is present as a nonaqueous phase liquid, for example, liquid not dissolved in water.

Subp. 23. **Gathering lines.** "Gathering lines" means a pipeline, equipment, facility, or building used in the transportation of oil or gas during oil or gas production or gathering operations.

Subp. 24. **Hazardous material.** "Hazardous material" means:

A. a substance listed in Code of Federal Regulations, title 49, section 172.101, including petroleum under subpart 38, item C, but not including:

(1) a hazardous waste listed or identified under chapter 7045 or Code of Federal Regulations, title 40, part 261;

(2) petroleum under subpart 38, item A, B, or D; or

(3) a substance that is not liquid at a temperature of 60 degrees Fahrenheit and pressure of 14.7 pounds per square inch absolute; or

B. any mixture of substances identified in item A and petroleum, unless the amount of the substance identified in item A is de minimus.

Subp. 25. **Hazardous material underground storage tank system.** "Hazardous material underground storage tank system" means an underground storage tank system that is used to contain a hazardous material.

Subp. 26. **Heating oil.** "Heating oil" means petroleum that is Nos. 1, 2, and 4 light, No. 4 heavy, No. 5 light, No. 5 heavy, and No. 6 technical grades of fuel oil; other residual fuel oils, including Navy Special Fuel Oil and Bunker C; and other fuels when used as substitutes for one of these fuel oils. Heating oil is typically used in the operation of heating equipment, boilers, or furnaces.

Subp. 27. **Hydraulic lift tank.** "Hydraulic lift tank" means a tank holding hydraulic fluid for a closed-loop mechanical system that uses compressed air or hydraulic fluid to operate lifts, elevators, and other similar devices.

Subp. 28. **Maintenance.** "Maintenance" means the normal operational upkeep to prevent an underground storage tank system from releasing a regulated substance.

Subp. 29. **Motor fuel.** "Motor fuel" means petroleum or a petroleum-based substance that is motor gasoline, aviation gasoline, No. 1 or 2 diesel fuel, or any grade of gasohol, and is typically used in the operation of a motor engine.

Subp. 30. **New tank system.** "New tank system" means a tank system that is or will be used to contain an accumulation of regulated substances and which is not an existing tank system as defined in subpart 19.

Subp. 31. **Noncommercial purposes.** "Noncommercial purposes," with respect to motor fuel, means not for resale.

Subp. 32. **On the premises where stored.** "On the premises where stored," with respect to heating oil, means underground storage tank systems located on the same property where the stored heating oil is used.

Subp. 33. **Operational life.** "Operational life" means the period beginning when installation of the tank system has begun until the time the tank system is properly closed under parts 7150.0400 to 7150.0440.

Subp. 34. **Operator.** "Operator" means a person in control of or having responsibility for the daily operation of the underground storage tank system or a person who was in control of or had responsibility for the daily operation of the tank immediately before discontinuation of its use.

Operator also means a person who is responsible under *Minnesota Statutes*, section 115C.021, for a release from an underground storage tank containing petroleum, or a person who is responsible under *Minnesota Statutes*, section 115B.03, for a release from an underground storage tank containing a hazardous material. Operator does not include a person who operates a tank if the tank is not regulated by this chapter.

Subp. 35. **Overfill release.** "Overfill release" means a release occurring when a tank is filled beyond its capacity, resulting in a discharge of the regulated substance to the environment.

KEY: PROPOSED RULES SECTION — Underlining indicates additions to existing rule language. ~~Strike outs~~ indicate deletions from existing rule language. If a proposed rule is totally new, it is designated "all new material." **ADOPTED RULES SECTION** — Underlining indicates additions to proposed rule language. ~~Strike outs~~ indicate deletions from proposed rule language.

Subp. 36. **Owner.** "Owner" means a person who holds title to, controls or possesses an interest in an underground storage tank, and a person who held title to, controlled, or possessed an interest in the tank immediately before discontinuation of its use.

Owner also means a person who is responsible under *Minnesota Statutes*, section 115C.021, for a release from an underground storage tank containing petroleum, or a person who is responsible under *Minnesota Statutes*, section 115B.03, for a release from an underground storage tank containing a hazardous material.

Owner does not include a person who owns a tank if the tank is not regulated by this chapter and does not include a person who holds an interest in a tank solely for financial security, unless through foreclosure or other related actions the holder of a security interest has taken possession of the tank.

Subp. 37. **Person.** "Person" means an individual, partnership, association, public or private corporation, or other legal entity, including the United States government, an interstate commission or other body, the state, or any agency, board, bureau, office, department, or political subdivision of the state, but does not include the Minnesota Pollution Control Agency.

Subp. 38. **Petroleum.** "Petroleum" means one of the following substances:

A. gasoline and fuel oil as defined in *Minnesota Statutes*, section 296.01, subdivisions 3 and 4;

B. crude oil or a fraction of crude oil that is liquid at a temperature of 60 degrees Fahrenheit and pressure of 14.7 pounds per square inch absolute;

C. constituents of gasoline and fuel oil under item A and constituents of crude oil under item B; or

D. petroleum-based substances that are comprised of a complex blend of hydrocarbons derived from crude oil through processes of separation, conversion, upgrading, and finishing, such as motor fuels, jet fuels, distillate fuel oils, residual fuel oils, lubricants, and used oils.

Subp. 39. **Petroleum underground storage tank system.** "Petroleum underground storage tank system" means an underground storage tank system that is used to contain petroleum or a mixture of petroleum with de minimus quantities of hazardous materials.

Subp. 40. **Pipe or piping.** "Pipe" or "piping" means a hollow cylinder or tubular conduit for conveying a regulated substance from one point to another within an underground storage tank system.

Subp. 41. **Pipeline facilities.** "Pipeline facilities," including gathering lines, means new and existing pipe rights-of-way and any associated equipment, facilities, or buildings.

Subp. 42. **Regulated substance.** "Regulated substance" means a hazardous material or petroleum.

Subp. 43. **Release.** "Release" means a spilling, leaking, emitting, discharging, escaping, leaching, or disposing from an underground storage tank into the environment including spills associated with overfills and transfer operations as the regulated substance moves to or from an underground storage tank system. "Release" does not include discharges or designed venting allowed under agency rules.

Subp. 44. **Release detection.** "Release detection" means determining whether a release of a regulated substance has occurred from the underground storage tank system into the environment or into the interstitial space between the underground storage tank system and its secondary barrier or secondary containment around it.

Subp. 45. **Repair.** "Repair" means the correction, restoration, modification, or upgrading of a tank system, including, but not limited to, the addition of cathodic protection systems, the replacement of piping, valves, fill pipes or vents, the lining of a tank through the application of materials such as epoxy resins, or any other similar activities that may affect the integrity of the tank system.

Subp. 46. **Residential tank.** "Residential tank" means a tank located on property used primarily for dwelling purposes.

Subp. 47. **Septic tank.** "Septic tank" means a watertight, covered receptacle designed to receive or process through liquid separation or biological digestion, the sewage discharged from a building sewer. The effluent from the receptacle is distributed for disposal through the soil and settled solids and scum from the tank are pumped out periodically and hauled to a treatment facility.

Subp. 48. **Storm water or wastewater collection system.** "Storm water or wastewater collection system" means piping, pumps, conduits, and any other equipment necessary to collect and transport the flow of surface water run-off resulting from precipitation, or domestic, commercial, or industrial wastewater to and from retention areas or areas where treatment is designated to occur. The collection of storm water and wastewater does not include treatment, except where incidental to conveyance.

Subp. 49. **Surface impoundment.** "Surface impoundment" means a natural topographic depression, man-made excavation, or diked area formed primarily of earthen materials, although it may be lined with man-made materials, that is not an injection well.

Subp. 50. **Tank.** "Tank" is a stationary device designed to contain an accumulation of regulated substances and constructed of nonearthen materials, such as concrete, steel, and plastic, that provide structural support.

Subp. 51. **Tank system.** "Tank system" has the same meaning as underground storage tank and underground storage tank system.

Subp. 52. **Underground area.** "Underground area" means an underground room such as a basement, cellar, shaft, or vault providing enough space for physical inspection of the exterior of the tank situated on or above the surface of the floor.

Subp. 53. **Underground release.** "Underground release" means a belowground release.

Subp. 54. **Underground storage tank or underground storage tank system.** "Underground storage tank" or "underground storage tank system" means any one or combination of containers including tanks, vessels, enclosures, or structures and underground appurtenances connected to them that is used to contain or dispense an accumulation of regulated substances, and the volume of which, including the volume of underground pipes connected to them, is ten percent or more beneath the surface of the ground. This term does not include any tank or pipes connected to a tank described in part 7150.0010, subpart 2.

Subp. 55. **Upgrade.** "Upgrade" means the addition or retrofit of systems such as cathodic protection, lining, piping, or spill and overfill controls to improve the ability of an underground storage tank system to prevent the release of a regulated substance.

Subp. 56. **Wastewater treatment tank.** "Wastewater treatment tank" means a tank that is designed to receive and treat an influent wastewater through physical, chemical, or biological methods.

UNDERGROUND STORAGE TANK SYSTEMS DESIGN, CONSTRUCTION, INSTALLATION, AND NOTIFICATION

7150.0100 PERFORMANCE STANDARDS FOR NEW UNDERGROUND STORAGE TANK SYSTEMS.

Subpart 1. **Purpose.** To prevent releases due to structural failure, corrosion, or spills and overfills for as long as the underground storage tank system is used to store regulated substances, all owners and operators of new underground storage tank systems must meet the requirements in subparts 2 to 8.

Subp. 2. **Tanks.** Each tank must be properly designed and constructed, and any part underground that routinely contains product must be protected from corrosion using one of the methods specified in items A to E. The corrosion protection methods in items A to D must be in accordance with one of the codes of practice in subpart 3 developed by a nationally recognized association or independent testing laboratory:

A. The tank is constructed of fiberglass-reinforced plastic.

B. The tank is constructed of steel and cathodically protected in the following manner:

(1) the tank is coated with a suitable dielectric material;

(2) field-installed cathodic protection systems are designed by a corrosion expert;

(3) impressed current systems are designed to allow determination of current operating status as required in part 7150.0210, subpart 4; and

(4) cathodic protection systems are operated and maintained according to part 7150.0210.

C. The tank is constructed of a steel- and fiberglass-reinforced plastic composite.

D. The tank is constructed of metal without additional corrosion protection measures provided that:

(1) the tank is installed at a site that is determined by a corrosion expert not to be corrosive enough to cause it to have a release due to corrosion during its operating life; and

(2) owners and operators maintain records that demonstrate compliance with the requirements of subitem (1) for the remaining life of the tank.

E. The tank construction and corrosion protection are determined by the commissioner to be designed to prevent the release or threatened release of a stored regulated substance in a manner that is no less protective of human health and the environment than items A to D. The commissioner's determination under this item must be obtained in writing and owners and operators must keep the determination for the life of the tank.

Subp. 3. **Codes of practice for tanks.** Codes of practice for subpart 2 are described in items A to C.

A. The following codes of practice apply to subpart 2, item A:

(1) Underwriters Laboratories UL 1316, Glass-Fiber-Reinforced Plastic Underground Storage Tanks for Petroleum Products;

KEY: PROPOSED RULES SECTION — Underlining indicates additions to existing rule language. ~~Strike outs~~ indicate deletions from existing rule language. If a proposed rule is totally new, it is designated "all new material." **ADOPTED RULES SECTION** — Underlining indicates additions to proposed rule language. ~~Strike outs~~ indicate deletions from proposed rule language.

(2) Underwriters Laboratories of Canada CAN4-S615-M83, Standard for Reinforced Plastic Underground Tanks for Petroleum Products; or

(3) American Society of Testing and Materials D4021-86, Standard Specification for Glass-Fiber-Reinforced Polyester Underground Petroleum Storage Tanks.

B. The following codes of practice apply to subpart 2, item B:

(1) Steel Tank Institute Specifications for STI-P3 System of External Corrosion Protection of Underground Steel Storage Tanks;

(2) Underwriters Laboratories UL 1746, Corrosion Protection Systems for Underground Storage Tanks;

(3) Underwriters Laboratories of Canada CAN4-S603.1-M85, Standard for Galvanic Corrosion Protection Systems for Steel Underground Tanks for Flammable and Combustible Liquids;

(4) Underwriters Laboratories of Canada CAN4-S603-M85, Standard for Steel Underground Tanks for Flammable and Combustible Liquids;

(5) Underwriters Laboratories of Canada CAN4-S631-M84, Standard for Isolating Bushings for Steel Underground Tanks Protected with Coatings and Galvanic Systems;

(6) National Association of Corrosion Engineers RP-02-85, Control of External Corrosion on Metallic Buried, Partially Buried, or Submerged Liquid Storage Systems; or

(7) Underwriters Laboratories UL 58, Steel Underground Tanks for Flammable and Combustible Liquids.

C. The following codes of practice apply to subpart 2, item C:

(1) Underwriters Laboratories UL 1746, Corrosion Protection Systems for Underground Storage Tanks;

(2) Association of Composite Tanks ACT-100, Specification for the Fabrication of FRP Clad Underground Storage Tanks; or

(3) Steel Tank Institute STI F894-89, Specification for External Corrosion Protection of FRP Composite Steel Underground Storage Tanks.

Subp. 4. **Piping.** The piping that routinely contains regulated substances and is in contact with the ground must be properly designed, constructed, and protected from corrosion using one of the methods specified in items A to D. The corrosion protection methods in items A to C must be in accordance with one of the codes of practice in subpart 5 developed by a nationally recognized association or independent testing laboratory:

A. The piping is constructed of fiberglass-reinforced plastic.

B. The piping is constructed of steel and cathodically protected in the following manner:

(1) the piping is coated with a suitable dielectric material;

(2) field-installed cathodic protection systems are designed by a corrosion expert;

(3) impressed current systems are designed to allow determination of current operating status as required in part 7150.0210, subpart 4; and

(4) cathodic protection systems are operated and maintained according to part 7150.0210.

C. The piping is constructed of metal without additional corrosion protection measures, provided that:

(1) the piping is installed at a site that is determined by a corrosion expert to not be corrosive enough to cause it to have a release due to corrosion during its operating life; and

(2) owners and operators maintain records that demonstrate compliance with subitem (1) for the remaining life of the piping.

D. The piping construction and corrosion protection are determined by the commissioner to be designed to prevent the release or threatened release of a stored regulated substance in a manner that is no less protective of human health and the environment than the requirements of items A to C. The commissioner's determination under this item must be obtained in writing and the tank owners and operators must keep the determination for the life of the tank.

Subp. 5. **Codes of practice for piping.** Codes of practice for subpart 4 are described in items A to C.

A. The following codes of practice apply to subpart 4, item A:

(1) Underwriters Laboratories UL 567, Pipe Connectors for Flammable and Combustible Liquids and LP-Gas;

(2) Underwriters Laboratories of Canada CAN4-S633-M84, Flexible Underground Hose Connectors for Flammable and Combustible Liquids; or

(3) Underwriters Laboratories of Canada ULC Subject C107C-M1984, Guide for Glass Fibre Reinforced Plastic Pipe and Fittings for Flammable Liquids.

B. The following codes of practice apply to subpart 4, item B:

(1) National Fire Protection Association 30, Flammable and Combustible Liquids Code;

(2) American Petroleum Institute 1615, Installation of Underground Petroleum Storage Systems;

(3) American Petroleum Institute 1632, Cathodic Protection of Underground Petroleum Storage Tanks and Piping Systems; or

(4) National Association of Corrosion Engineers RP-01-69, Control of External Corrosion on Underground or Submerged Metallic Piping Systems.

C. The following codes of practice apply to subpart 4, item C:

(1) National Fire Protection Association 30, Flammable and Combustible Liquids Code; or

(2) National Association of Corrosion Engineers RP-01-69, Control of External Corrosion on Underground or Submerged Metallic Piping Systems.

Subp. 6. **Spill and overfill prevention equipment.**

A. Except as provided in item B, to prevent spilling and overfilling associated with product transfer to the underground storage tank system, owners and operators must use the following spill and overfill prevention equipment:

(1) spill prevention equipment that will prevent release of product to the environment when the transfer hose is detached from the fill pipe, for example, a spill catchment basin; and

(2) overfill prevention equipment that will:

(a) automatically shut off flow into the tank when the tank is no more than 95 percent full; or

(b) alert the transfer operator when the tank is no more than 90 percent full by restricting the flow into the tank or triggering a high-level alarm.

B. Owners and operators are not required to use the spill and overfill prevention equipment specified in item A if:

(1) alternative equipment is used that is determined by the commissioner to be no less protective of human health and the environment than the equipment specified in item A; or

(2) the underground storage tank system is filled by transfers of no more than 25 gallons at one time.

The commissioner's determination under subitem (1) must be obtained in writing and the tank owners and operators must keep the determination for the life of the tank.

Subp. 7. **Installation.** All tanks and piping must be properly installed according to the manufacturer's instructions and one of the following codes of practice developed by a nationally recognized association or independent testing laboratory:

A. American Petroleum Institute 1615, Installation of Underground Petroleum Storage Systems;

B. Petroleum Equipment Institute RP 100, Recommended Practices for Installation of Underground Liquid Storage Systems;

C. American National Standards Institute B31.3, Chemical Plant and Petroleum Refinery Piping; or

D. American National Standards Institute B31.4, Liquid Transportation Systems for Hydrocarbons, Liquid Petroleum Gas, Anhydrous Ammonia and Alcohols.

Subp. 8. **Certification of installation.** Owners and operators must demonstrate compliance with subpart 7 by certifying on the underground storage tank notification form required in part 7150.0120 that:

A. the installer is in compliance with certification requirements imposed by the agency under chapter 7105; and

B. all work listed in the manufacturer's installation checklists has been completed.

7150.0110 UPGRADING OF EXISTING UNDERGROUND STORAGE TANK SYSTEMS.

Subpart 1. **Alternatives allowed.** Not later than December 22, 1998, all existing underground storage tank systems must comply with one of the following requirements:

KEY: PROPOSED RULES SECTION — Underlining indicates additions to existing rule language. ~~Strike outs~~ indicate deletions from existing rule language. If a proposed rule is totally new, it is designated "all new material." **ADOPTED RULES SECTION** — Underlining indicates additions to proposed rule language. ~~Strike outs~~ indicate deletions from proposed rule language.

A. new underground storage tank system performance standards under part 7150.0100;

B. the upgrading requirements in subparts 2 to 4; or

C. closure requirements under parts 7150.0400 to 7150.0440, including applicable requirements for corrective action under *Minnesota Statutes*, section 115.061.

Subp. 2. **Tank upgrading requirements.** Steel tanks must be protected from corrosion using the corrosion protection methods in items A to C.

A. A tank may be upgraded by internal lining if:

(1) the lining is installed according to the requirements of part 7150.0230; and

(2) within ten years after lining, and every five years after that, the lined tank is internally inspected and found to be structurally sound with the lining still performing according to original design specifications.

B. A tank may be upgraded by cathodic protection if the cathodic protection system meets the requirements of part 7150.0100, subpart 2, item B, subitems (2) to (4), and the integrity of the tank is ensured using one of the methods in subitems (1) to (4).

(1) The tank is internally inspected and assessed to ensure that the tank is structurally sound and free of corrosion holes prior to installing the cathodic protection system.

(2) The tank has been installed for less than ten years and is monitored monthly for releases according to part 7150.0330, items E to I.

(3) The tank has been installed for less than ten years and is assessed for corrosion holes by conducting two tightness tests that meet the requirements of part 7150.0330, item D. The first tightness test must be conducted before installing the cathodic protection system. The second tightness test must be conducted between three and six months following the first operation of the cathodic protection system.

(4) The tank is assessed for corrosion holes by a method that is determined by the commissioner to prevent releases in a manner that is no less protective of human health and the environment than subitems (1) to (3).

C. A tank may be upgraded by both internal lining and cathodic protection if:

(1) the lining is installed according to part 7150.0230; and

(2) the cathodic protection system meets the requirements of part 7150.0100, subpart 2, item B, subitems (2) to (4).

D. The corrosion protection methods in items A to C must be in accordance with one or more of the following codes of practice developed by a nationally recognized association or independent testing laboratory:

(1) American Petroleum Institute 1631, Interior Lining of Underground Storage Tanks;

(2) National Leak Prevention Association 631, Spill Prevention, Minimum 10-Year Life Extension of Existing Steel Underground Tanks by Lining Without the Addition of Cathodic Protection;

(3) National Association of Corrosion Engineers RP-02-85, Control of External Corrosion on Metallic Buried, Partially Buried, or Submerged Liquid Storage Systems; or

(4) American Petroleum Institute 1632, Cathodic Protection of Underground Petroleum Storage Tanks and Piping Systems.

Subp. 3. **Piping upgrading requirements.** Metal piping that routinely contains regulated substances and is in contact with the ground must meet the requirements of part 7150.0100, subpart 4, item B, subitems (2) to (4).

Subp. 4. **Spill and overfill prevention equipment.** To prevent spilling and overfilling associated with product transfer to the underground storage tank system, all existing underground storage tank systems must comply with new underground storage tank system spill and overfill prevention equipment requirements in part 7150.0100, subpart 6.

7150.0120 NOTIFICATION REQUIREMENTS.

Subpart 1. **Notice of underground storage tank system installation.** At least 30 days before beginning installation of an underground storage tank system under part 7150.0100, owners and operators must notify the commissioner of their intent to install the underground storage tank system.

Subp. 2. **Notification of new tanks and changes in service.** An owner who brings an underground storage tank system into use or makes a change in service to an existing tank system after June 1, 1986, must, within 30 days of bringing such tank into use or making a change in service, submit to the agency, in the form prescribed by the commissioner, a notice of the existence of such tank system or type of change in service, including the information required by *Minnesota Statutes*, section 116.48, subdivisions 1 and 3.

Subp. 3. **Owner and operator tank system certification.** Owners and operators of new underground storage tank systems must certify in the notification form compliance with the following requirements:

A. installation of tanks and piping under part 7150.0100, subpart 8;

B. cathodic protection of steel tanks and piping under part 7150.0100, subparts 2 and 4;

C. financial responsibility under Code of Federal Regulations, title 40, part 280, subpart H; and

D. release detection under parts 7150.0310 and 7150.0320.

Subp. 4. **Installer tank system certification.** Owners and operators of new underground storage tank systems must ensure that the installer certifies in the notification form that the methods used to install the tanks and piping comply with part 7150.0100, subpart 7, and that the installer is in compliance with certification requirements imposed by chapter 7105.

Subp. 5. **Repairer tank system certification.** Owners and operators of underground storage tank systems must ensure that the repairer certifies in the notification form that the methods used to repair the tanks and piping comply with parts 7150.0110 and 7150.0230 and that the repairer is in compliance with certification requirements imposed by chapter 7105.

Subp. 6. **Tank seller notification.** A person who sells a tank intended to be used as an underground storage tank or property that the seller knows contains an underground storage tank must notify the purchaser of the tank in writing of the owner's notification obligations under subpart 1 and under *Minnesota Statutes*, section 116.48.

GENERAL OPERATING REQUIREMENTS

7150.0200 SPILL AND OVERFILL CONTROL.

Subpart 1. **Spill and overfill release prevention.** Owners and operators must ensure that releases due to spilling or overfilling do not occur. The owner or operator must ensure that the volume available in the tank is greater than the volume of product to be transferred to the tank before the transfer is made and that the transfer operation is monitored constantly to prevent overfilling and spilling. One of the following codes of practice developed by a nationally recognized association or independent testing laboratory must be used to comply with this subpart:

A. National Fire Protection Association 30, Flammable and Combustible Liquids Code;

B. National Fire Protection Association 385, Standard for Tank Vehicles for Flammable and Combustible Liquids; or

C. American Petroleum Institute 1621, Bulk Liquid Stock Control at Retail Outlets.

Subp. 2. **Reporting and cleanup.** The owner and operator must report, investigate, and cleanup any spills and overfills according to *Minnesota Statutes*, section 115.061.

7150.0210 OPERATION AND MAINTENANCE OF CORROSION PROTECTION.

Subpart 1. **Owner and operator compliance.** Owners and operators of underground storage tank systems with corrosion protection must comply with the requirements in subparts 2 to 5 to ensure that releases due to corrosion are prevented for as long as the underground storage tank system is used to store regulated substances, or is temporarily closed in accordance with part 7150.0400.

Subp. 2. **Corrosion protection system maintenance.** All corrosion protection systems must be operated and maintained to continuously provide corrosion protection to the metal components of the part of the tank and piping that routinely contains regulated substances and is in contact with the ground.

Subp. 3. **Cathodic protection system maintenance.** All underground storage tank systems equipped with cathodic protection systems must be inspected for proper operation by a qualified cathodic protection tester according to the following requirements:

A. all cathodic protection systems must be tested within six months of installation and at least every three years after that; and

B. the criteria that are used to determine that cathodic protection is adequate as required by this subpart must be according to the code of practice in National Association of Corrosion Engineers RP-02-85, Control of External Corrosion on Metallic Buried, Partially Buried, or Submerged Liquid Storage Systems.

Subp. 4. **Impressed current system maintenance.** Underground storage tank systems with impressed current cathodic protection systems must also be inspected every 60 days to ensure the equipment is running properly.

Subp. 5. **Recordkeeping.** For underground storage tank systems using cathodic protection, records of the operation of the cathodic protection must be maintained according to part 7150.0240 to demonstrate compliance with the performance standards in this part. These records must provide:

KEY: PROPOSED RULES SECTION — Underlining indicates additions to existing rule language. ~~Strike outs~~ indicate deletions from existing rule language. If a proposed rule is totally new, it is designated "all new material." **ADOPTED RULES SECTION** — Underlining indicates additions to proposed rule language. ~~Strike outs~~ indicate deletions from proposed rule language.

A. the results of the last three inspections required in subpart 4; and

B. the results of testing from the last two inspections required in subpart 3.

7150.0220 COMPATIBILITY.

Owners and operators must use an underground storage tank system made of or lined with materials that are compatible with the substance stored in the underground storage tank system. Owners and operators storing alcohol blends may use the following guidance to comply with the requirements of this part:

A. American Petroleum Institute 1626, Storing and Handling Ethanol and Gasoline-Ethanol Blends at Distribution Terminals and Service Stations; or

B. American Petroleum Institute 1627, Storing and Handling of Gasoline-Methanol/Cosolvent Blends at Distribution Terminals and Service Stations.

7150.0230 REPAIRS ALLOWED.

Owners and operators of underground storage tank systems must ensure that repairs will prevent releases due to structural failure or corrosion as long as the underground storage tank system is used to store regulated substances. The owner and operator of the tank shall ensure that the person performing the repairs has been certified under chapter 7105. The repairs must meet the requirements in items A to F:

A. Repairs to underground storage tank systems must be properly conducted according to one of the following codes of practice developed by a nationally recognized association or independent testing laboratory:

(1) National Fire Protection Association 30, Flammable and Combustible Liquids Code;

(2) American Petroleum Institute 2200, Repairing Crude Oil, Liquefied Petroleum Gas and Product Pipelines;

(3) American Petroleum Institute 1631, Interior Lining of Underground Storage Tanks; or

(4) National Leak Prevention Association 631, Spill Prevention, Minimum 10-Year Life Extension of Existing Steel Underground Tanks by Lining Without the Addition of Cathodic Protection.

B. Repairs to fiberglass-reinforced plastic tanks must be made according to the codes of practice required in item A.

C. Metal pipe sections and fittings that have released product as a result of corrosion or other damage must be replaced. Fiberglass pipes and fittings must be repaired in accordance with the manufacturer's specifications.

D. Repaired tanks and piping must be tightness tested according to parts 7150.0330, item D; and 7150.0340, item B, within 30 days after the date of the completion of the repair except as provided in subitems (1) to (3):

(1) the repaired tank is internally inspected according to the codes of practice required in item A;

(2) the repaired part of the underground storage tank system is monitored monthly for releases according to a method specified in part 7150.0330, items E to I; or

(3) another test method is used that is determined by the commissioner to be no less protective of human health and the environment than the tests in subitems (1) and (2).

E. Within six months after the repair of a cathodically protected underground storage tank system, the cathodic protection system must be tested according to part 7150.0210, subparts 3 and 4, to ensure that it is operating properly.

F. Owners and operators must maintain records of each repair, and of a commissioner's determination under item D, subitem (3), for the remaining operating life of the underground storage tank system that demonstrate compliance with the requirements of this part.

7150.0240 REPORTING AND RECORDKEEPING.

Owners and operators of underground storage tank systems must cooperate fully with inspections, monitoring, and testing conducted by the agency, as well as requests for document submission, testing, and monitoring by the owner or operator under United States Code, title 42, section 6991d.

A. Owners and operators must submit the following information to the commissioner:

(1) notification of all underground storage tank systems under part 7150.0120, including certification of installation for new underground storage tank systems under part 7150.0100, subpart 8;

(2) notification of the discovery of an abandoned tank or of a change in the uses, contents, or ownership of a tank under *Minnesota Statutes*, section 116.48, subdivisions 2 and 3;

(3) reports of all releases under *Minnesota Statutes*, section 115.061, including suspected releases, spills and overfills, and confirmed releases;

(4) information generated in the course of taking corrective action as defined in *Minnesota Statutes*, section 115C.02, subdivision 4; and

(5) a notification before permanent closure or change in service under part 7150.0410.

B. Owners and operators must maintain the following information:

(1) a corrosion expert's analysis of site corrosion potential if corrosion protection equipment is not used under part 7150.0100, subparts 2, item D, and 4, item C;

(2) the commissioner's determination that alternative corrosion protection or spill and overfill equipment means may be used under part 7150.0100, subpart 2, item E; 4, item D; or 6, item B;

(3) documentation of operation of corrosion protection equipment under part 7150.0210, subpart 5;

(4) documentation of underground storage tank system repairs under part 7150.0230, item F;

(5) documentation of compliance with release detection requirements under part 7150.0350; and

(6) results of the site investigation conducted at permanent closure under part 7150.0440.

C. Owners and operators must keep the records required either:

(1) at the underground storage tank site where they are immediately available for inspection by the commissioner; or

(2) at a readily available alternative site where they can be provided for inspection to the commissioner upon request.

In the case of permanent closure records required under part 7150.0440, owners and operators are also provided with the additional alternative of mailing closure records to the commissioner if they cannot be kept at the site or an alternative site as required in this item.

RELEASE DETECTION

7150.0300 GENERAL REQUIREMENTS FOR ALL UNDERGROUND STORAGE TANK SYSTEMS.

Subpart 1. **Methods.** Owners and operators of new and existing underground storage tank systems must provide a method, or combination of methods, of release detection that:

A. can detect a release from any part of the tank and the connected underground piping that routinely contains product;

B. is installed, calibrated, operated, and maintained according to the manufacturer's instructions, including routine maintenance and service checks for operability or running condition; and

C. meets the performance requirements in part 7150.0330 or 7150.0340, with any performance claims and their manner of determination described in writing by the equipment manufacturer or installer. In addition, all methods must be capable of detecting the leak rate or quantity specified for that method in part 7150.0330, items B to E; or 7150.0340, items A and B, with a probability of detection of 0.95 and a probability of false alarm of 0.05.

Subp. 2. **Release notification.** When a release detection method operated according to the performance standards in parts 7150.0330 and 7150.0340 indicates a release may have occurred, owners and operators must notify the agency according to *Minnesota Statutes*, section 115.061.

Subp. 3. **Release detection schedule.** Owners and operators of all underground storage tank systems must comply with the release detection requirements of parts 7150.0300 to 7150.0350 by December 22 of the year listed in the following table. Hazardous material tanks which are not regulated by Code of Federal Regulations, title 40, part 280, must comply with these requirements by the date indicated or by (insert date 180 days after date of adoption), whichever is later:

Schedule for Phase-in of Release Detection

Year System Was Installed	Year When Release Detection is Required (by December 22 of the year indicated)				
	1989	1990	1991	1992	1993
Before 1965 or date unknown	RD	P			
1965-1969		P/RD			

KEY: PROPOSED RULES SECTION — Underlining indicates additions to existing rule language. ~~Strike outs~~ indicate deletions from existing rule language. If a proposed rule is totally new, it is designated "all new material." **ADOPTED RULES SECTION** — Underlining indicates additions to proposed rule language. ~~Strike outs~~ indicate deletions from proposed rule language.

Year System Was Installed	Year When Release Detection is Required (by December 22 of the year indicated)				
	1989	1990	1991	1992	1993
1970-1974		P	RD		
1975-1979		P		RD	
1980-1988		P			RD
New tanks (after December 22, 1988)			Immediately upon installation		

P = must begin release detection for all pressurized piping according to part 7150.0310.

RD = must begin release detection for tanks and suction piping according to parts 7150.0310, items A and B, subitem (2); and 7150.0320.

Subp. 4. **Closure.** Owners and operators of existing underground storage tank systems that cannot apply a method of release detection that complies with the requirements of parts 7150.0300 to 7150.0350 must complete the closure procedures in parts 7150.0400 to 7150.0440 by the date on which release detection is required for the underground storage tank system under subpart 3.

7150.0310 REQUIREMENTS FOR PETROLEUM UNDERGROUND STORAGE TANK SYSTEMS.

Owners and operators of petroleum underground storage tank systems must provide release detection for tanks and piping as required in items A and B.

A. Tanks must be monitored at least every 30 days for releases using one of the methods in part 7150.0330, items E to I, except that:

(1) underground storage tank systems that meet the performance standards in part 7150.0100 or 7150.0110, and the monthly inventory control requirements in part 7150.0330, item A or B, may use tank tightness testing, conducted according to part 7150.0330, item D, at least every five years until December 22, 1998, or until ten years after the tank is installed or upgraded under part 7150.0110, item B, whichever is later;

(2) underground storage tank systems that do not meet the performance standards in part 7150.0100 or 7150.0110 may use monthly inventory controls conducted according to part 7150.0330, item A or B, and annual tank tightness testing conducted according to part 7150.0330, item D, until December 22, 1998, when the tank must be upgraded under part 7150.0110 or permanently closed under part 7150.0410; and

(3) tanks with capacities of 550 gallons or less may use weekly manual tank gauging conducted according to part 7150.0330, item B, as the sole method of release detection.

B. Underground piping that routinely contains regulated substances must be monitored for releases in a manner that meets one of the requirements in subitem (1) or (2).

(1) Underground piping that conveys regulated substances under pressure must:

(a) be equipped with an automatic line leak detector conducted according to part 7150.0340, item A; and

(b) have an annual line tightness test conducted according to part 7150.0340, item B, or have monthly monitoring conducted according to part 7150.0340, item C.

(2) Underground piping that conveys regulated substances under suction must either have a line tightness test conducted at least every three years and according to part 7150.0340, item B, or use a monthly monitoring method conducted according to part 7150.0340, item C. No release detection is required for suction piping that is designed and constructed to meet the following standards:

(a) the below-grade piping operates at less than atmospheric pressure;

(b) the below-grade piping is sloped so that the contents of the pipe will drain back into the storage tank if the suction is released;

(c) only one check valve is included in each suction line;

(d) the check valve is located directly below and as close as practical to the suction pump; and

(e) a method is provided that allows compliance with units (b) to (d) to be readily determined.

7150.0320 REQUIREMENTS FOR HAZARDOUS MATERIAL UNDERGROUND STORAGE TANK SYSTEMS.

Owners and operators of hazardous material underground storage tank systems must provide release detection that meets the requirements in items A and B.

A. Release detection at existing hazardous material underground storage tank systems must meet the requirements for petroleum

underground storage tank systems in part 7150.0310 by the dates set forth in part 7150.0300. By December 22, 1998, all existing hazardous material underground storage tank systems must meet the release detection requirements for new systems in item B.

B. Release detection at new hazardous material underground storage tank systems must meet the requirements in subitems (1) to (5):

(1) Secondary containment systems must be designed, constructed, and installed to:

(a) contain regulated substances released from the tank system until they are detected and removed;

(b) prevent the release of regulated substances to the environment at any time during the operational life of the underground storage tank system; and

(c) be checked for evidence of a release at least every 30 days.

The provisions of part 7045.0528 may be used to comply with this subitem.

(2) Double-walled tanks must be designed, constructed, and installed to:

(a) contain a release from any part of the inner tank within the outer wall; and

(b) detect the failure of the inner wall.

(3) External liners, including vaults, must be designed, constructed, and installed to:

(a) contain 100 percent of the capacity of the largest tank within its boundary;

(b) prevent the interference of precipitation or groundwater intrusion with the ability to contain or detect a release of regulated substances; and

(c) surround the tank completely, for example, it is capable of preventing lateral as well as vertical migration of regulated substances.

(4) Underground piping must be equipped with secondary containment that satisfies the requirements of subitem (1), for example, trench liners and jacketing of double-walled pipe. In addition, underground piping that conveys regulated substances under pressure must be equipped with an automatic line leak detector according to part 7150.0340, item A.

(5) Other methods of release detection may be used if owners and operators:

(a) demonstrate to the commissioner that an alternate method can detect a release of the stored substance as effectively as any of the methods allowed in part 7150.0330, items B to I, can detect a release of petroleum;

(b) provide information to the commissioner on effective corrective action technologies, health risks, and chemical and physical properties of the stored substance, and the characteristics of the underground storage tank site; and

(c) obtain approval from the commissioner to use the alternate release detection method before the installation and operation of the new underground storage tank system.

7150.0330 METHODS OF RELEASE DETECTION FOR TANKS.

Each method of release detection for tanks used to meet the requirements of part 7150.0310 must be conducted according to items A to I.

A. Product inventory control or another test of equivalent performance must be conducted monthly to detect a release of at least 1.0 percent flow-through plus 130 gallons on a monthly basis in the following manner:

(1) inventory volume measurements for regulated substance inputs, withdrawals, and the amount still remaining in the tank are recorded each operating day;

(2) the equipment used is capable of measuring the level of product over the full range of the tank's height to the nearest one-eighth of an inch;

(3) the regulated substance inputs are reconciled with delivery receipts by measurement of the tank inventory volume before and after delivery;

(4) deliveries are made through a drop tube that extends to within one foot of the tank bottom;

KEY: PROPOSED RULES SECTION — Underlining indicates additions to existing rule language. ~~Strike outs~~ indicate deletions from existing rule language. If a proposed rule is totally new, it is designated "all new material." **ADOPTED RULES SECTION** — Underlining indicates additions to proposed rule language. ~~Strike outs~~ indicate deletions from proposed rule language.

(5) product dispensing is metered and recorded within the local standards for meter calibration incorporated by reference at part 7600.6800; and

(6) the measurement of any water level in the bottom of the tank is made to the nearest one-eighth of an inch at least once a month.

Practices described in American Petroleum Institute 1621, Recommended Practice for Bulk Liquid Stock Control at Retail Outlets, may be used, where applicable, as guidance in meeting the requirements of this item.

B. Manual tank gauging may be used as described in this item to meet the requirements of part 7150.0310, item A.

(1) For tanks with capacities of 1,000 gallons or less, weekly manual tank gauging may be used as the sole method of release detection.

(2) For tanks with capacities of 1,001 to 2,000 gallons, manual tank gauging may be used in place of product inventory control in item A.

For tanks not described in subitems (1) and (2), manual tank gauging may not be used to satisfy the provisions of part 7150.0310, item A.

C. Manual tank gauging must meet the following requirements:

(1) tank liquid level measurements are taken at the beginning and ending of a period of at least 36 hours during which no liquid is added to or removed from the tank;

(2) level measurements are based on an average of two consecutive stick readings at both the beginning and ending of the period; and

(3) the equipment used is capable of measuring the level of product over the full range of the tank's height to the nearest one-eighth of an inch.

A leak is suspected and subject to the requirements of *Minnesota Statutes*, section 115.061, if the variation between beginning and ending measurements exceeds the weekly or monthly standards in the following table:

Tank Capacity	Weekly Standard (one test)	Monthly Standard (four-test avg.)	Minimum Duration of Test
If manual tank gauging is the ONLY leak detection method used:			
up to 550 gallons	10 gallons	5 gallons	36 hours
551-1,000 gallons (when largest tank is 64" x 73")	9 gallons	4 gallons	44 hours
1,000 gallons (if tank is 48" x 128")	12 gallons	6 gallons	58 hours
If manual tank gauging is combined with Tank Tightness Testing:			
1,001-2,000 gallons	26 gallons	13 gallons	36 hours

D. Tank tightness testing or another test of equivalent performance must be capable of detecting a 0.1 gallon per hour leak rate from any part of the tank that routinely contains product while accounting for the effects of thermal expansion or contraction of the product, vapor pockets, tank deformation, evaporation or condensation, and the location of the water table.

E. Equipment for automatic tank gauging that tests for the loss of product and conducts inventory control must meet the following requirements:

(1) the automatic product level monitor test can detect a 0.2 gallon per hour leak rate from any part of the tank that routinely contains product; and

(2) inventory control or another test of equivalent performance is conducted according to the requirements of item A.

F. Testing or monitoring for vapors within the soil gas of the excavation zone must meet the following requirements:

(1) the materials used as backfill are sufficiently porous such as gravel, sand, or crushed rock, to readily allow diffusion of vapors from releases into the excavation area;

(2) the stored regulated substance, or a tracer compound placed in the tank system, is sufficiently volatile, such as gasoline,

to result in a vapor level that is detectable by the monitoring devices located in the excavation zone in the event of a release from the tank;

(3) the measurement of vapors by the monitoring device is not rendered inoperative by the groundwater, rainfall, or soil moisture or other known interferences so that a release could go undetected for more than 30 days;

(4) the level of background contamination in the excavation zone will not interfere with the method used to detect releases from the tank;

(5) the vapor monitoring points are designed and operated to detect any significant increase in concentration above background of the regulated substance stored in the tank system, a component or components of that substance, or a tracer compound placed in the tank system;

(6) in the underground storage tank excavation zone, the site is assessed to ensure compliance with the requirements in subitems (1) to (4) and to establish the number and positioning of vapor monitoring points that will detect releases within the excavation zone from any part of the tank that routinely contains product; and

(7) vapor monitoring points are clearly marked and secured to avoid unauthorized access and tampering.

G. Testing or monitoring for liquids in the groundwater must meet the provisions of chapter 4725, as well as the following requirements:

(1) the regulated substance stored is immiscible in water and has a specific gravity of less than one;

(2) groundwater is never more than 20 feet from the ground surface and the hydraulic conductivity of the soil between the underground storage tank system and the monitoring wells or devices is not less than 0.01 centimeters per second, for example, the soil should consist of gravels, coarse to medium sands, coarse silts, or other permeable materials;

(3) the slotted part of the monitoring well casing must be designed to prevent migration of natural soils or filter pack into the well and to allow entry of regulated substance on the water table into the well under both high and low groundwater conditions;

(4) monitoring wells are sealed from the ground surface to the top of the filter pack;

(5) monitoring wells or devices intercept the excavation zone or are as close to it as is technically feasible;

(6) the continuous monitoring devices or manual methods used can detect the presence of at least one-eighth of an inch of free product on top of the groundwater in the monitoring wells;

(7) within and immediately below the underground storage tank system excavation zone, the site is assessed to ensure compliance with the requirements in subitems (1) to (5), and to establish the number and positioning of monitoring wells or devices that will detect releases from any part of the tank that routinely contains product; and

(8) monitoring wells are clearly marked and secured to avoid unauthorized access and tampering.

H. Interstitial monitoring between the underground storage tank system and a secondary barrier immediately around or beneath it may be used, but only if the system is designed, constructed, and installed to detect a leak from any part of the tank that routinely contains product and also meets one of the requirements of subitems (1) to (3).

(1) For double-walled underground storage tank systems, the sampling or testing method can detect a release through the inner wall in any part of the tank that routinely contains product. The provisions outlined in the Steel Tank Institute's Standard for Dual Wall Underground Storage Tanks may be used as guidance for aspects of the design and construction of underground steel double-walled tanks.

(2) For underground storage tank systems with a secondary barrier within the excavation zone, the sampling or testing method used can detect a release between the underground storage tank system and the secondary barrier according to the following requirements:

(a) the secondary barrier around or beneath the underground storage tank system consists of artificially constructed material that is sufficiently thick and impermeable, being at least 10^{-6} centimeters per second for the regulated substance stored, to direct a release to the monitoring point and permit its detection;

(b) the barrier is compatible with the regulated substance stored so that a release from the underground storage tank system will not cause a deterioration of the barrier allowing a release to pass through undetected;

KEY: PROPOSED RULES SECTION — Underlining indicates additions to existing rule language. ~~Strike outs~~ indicate deletions from existing rule language. If a proposed rule is totally new, it is designated "all new material." **ADOPTED RULES SECTION** — Underlining indicates additions to proposed rule language. ~~Strike outs~~ indicate deletions from proposed rule language.

(c) for cathodically protected tanks, the secondary barrier must be installed so that it does not interfere with the proper operation of the cathodic protection system;

(d) the groundwater, soil moisture, or rainfall will not render the testing or sampling method used inoperative so that a release could go undetected for more than 30 days;

(e) the site is assessed to ensure that the secondary barrier is always above the groundwater and not in a 25-year flood plain, unless the barrier and monitoring designs are for use under such conditions; and

(f) monitoring wells and vapor monitoring points are clearly marked and secured to avoid unauthorized access and tampering.

(3) For tanks with an internally fitted liner, an automated device can detect a release between the inner wall of the tank and the liner, and the liner is compatible with the substance stored.

I. Any other type of release detection method, or combination of methods, can be used if:

(1) it can detect a 0.2 gallon per hour leak rate or a release of 150 gallons within a month with a probability of detection of 0.95 and a probability of false alarm of 0.05; and

(2) the owner and operator can demonstrate to the commissioner that the method can detect a release as effectively as any of the methods allowed in items D to H and obtain the commissioner's prior approval of the method. In comparing methods, the commissioner shall consider the size of release that the method can detect and the frequency and reliability with which it can be detected. If the method is approved by the commissioner, the owner and operator must comply with any conditions imposed by the commissioner on its use to ensure the protection of human health and the environment.

7150.0340 METHODS OF RELEASE DETECTION FOR PIPING.

Each method of release detection for piping used to meet the requirements of part 7150.0300 must be conducted according to items A to C.

A. Methods which alert the operator to the presence of a leak by restricting or shutting off the flow of regulated substances through piping or triggering an audible or visual alarm may be used only if they detect leaks of three gallons per hour at ten pounds per square inch line pressure within one hour. An annual test of the operation of the leak detector must be conducted according to the manufacturer's requirements.

B. A periodic test of piping may be conducted only if it can detect a 0.1 gallon per hour leak rate at one and one-half times the operating pressure.

C. Any of the methods in part 7150.0330, items F to I, may be used if they are designed to detect a release from any part of the underground piping that routinely contains regulated substances.

7150.0350 RELEASE DETECTION RECORDKEEPING.

Owners and operators shall maintain records according to part 7150.0240 demonstrating compliance with applicable requirements of parts 7150.0300 to 7150.0350. These records must include the requirements of items A to C.

A. All written performance claims pertaining to any release detection system used, and the manner in which these claims have been justified or tested by the equipment manufacturer or installer, must be maintained for as long as the system is being used to comply with the requirements of this chapter.

B. The results of any sampling, testing, or monitoring must be maintained for at least ten years.

C. Written documentation of all calibration, maintenance, and repair of release detection equipment permanently located on-site must be maintained for at least ten years after the servicing work is completed. Any schedules of required calibration and maintenance provided by the release detection equipment manufacturer must be retained as long as the system is being used to comply with the requirements of this chapter.

D. Documentation of the commissioner's approval of alternate release detection methods under part 7150.0330, item I, must be maintained for as long as the methods are being used to comply with the requirements of this chapter.

OUT-OF-SERVICE UNDERGROUND STORAGE TANK SYSTEMS AND CLOSURE

7150.0400 TEMPORARY CLOSURE.

Subpart 1. **Requirements.** In addition to the requirements of chapter 7510, the Minnesota Uniform Fire Code, owners and operators must comply with the provisions in subparts 2 to 4 relating to temporary closure.

Subp. 2. **Operation and maintenance during temporary closure.** When an underground storage tank system is temporarily closed, owners and operators must continue operation and maintenance of corrosion protection according to part 7150.0210, and any release detection according to parts 7150.0300 to 7150.0350. Release detection is not required as long as the underground storage tank system

is empty. The underground storage tank system is empty when all materials have been removed using commonly employed practices so that no more than 2.5 centimeters, or one inch, of residue, or 0.3 percent by weight of the total capacity of the underground storage tank system, remain in the system.

Subp. 3. **Tanks out of service 90 days.** When an underground storage tank system is temporarily closed for 90 days or more, owners and operators must also comply with the following requirements:

A. leave vent lines open and functioning; and

B. cap and secure all other lines, pumps, passageways, and appurtenances.

Subp. 4. **Tanks out of service one year.** When an underground storage tank system is temporarily closed for more than 12 months, owners and operators must permanently close the underground storage tank system if it does not meet either performance standards in part 7150.0100 for new underground storage tank systems or the upgrading requirements in part 7150.0110, except that the spill and overfill equipment requirements do not have to be met. Owners and operators must permanently close the substandard underground storage tank systems at the end of this 12-month period according to parts 7150.0410 to 7150.0440, unless the commissioner provides an extension of the 12-month temporary closure period. Owners and operators must complete a site assessment according to part 7150.0420 before such an extension can be applied for.

7150.0410 PERMANENT CLOSURE AND CHANGES-IN-SERVICE TO STORAGE OF NONREGULATED SUBSTANCES.

Subpart 1. **Requirements.** In addition to the requirements of chapter 7510, the Minnesota Uniform Fire Code, owners and operators must comply with the provisions in subparts 2 to 7 relating to permanent closure and changes-in-service.

Subp. 2. **Notice of closure or change in service.** At least ten days before beginning either permanent closure or a change-in-service under subparts 3 and 4, owners and operators must notify the commissioner of their intent to permanently close or make the change-in-service, unless such action is in response to corrective action. The required assessment of the excavation zone under part 7150.0420 must be performed after notifying the commissioner but before completion of the permanent closure or a change-in-service.

Subp. 3. **Permanent closure.** To permanently close a tank, owners and operators must empty and clean it by removing all liquids and accumulated sludges. All tanks taken out of service permanently must also be either removed from the ground or filled in with an inert solid material.

Subp. 4. **Storage of nonregulated substances.** Continued use of an underground storage tank system to store a nonregulated substance is considered a change in service. Before a change in service to storage of a nonregulated substance, owners and operators must empty and clean the tank by removing all liquid and accumulated sludge and conduct a site assessment according to part 7150.0420.

Subp. 5. **Certified removers.** Owners and operators must ensure that persons performing permanent closures under subpart 3 or changes-in-service under subpart 4 are in compliance with certification requirements imposed by chapter 7105. Certified removers must furnish copies of current certificates issued by the agency to the owner and operator before beginning a permanent closure under subpart 3 or a change-in-service under subpart 4.

Subp. 6. **Tank system closure certification.** Owners and operators must ensure that the person who removes or otherwise closes an underground storage tank system certifies in the notification form that the methods used to remove or otherwise close the tanks and piping comply with part 7150.0410, subparts 3 to 5.

Subp. 7. **Cleaning and closure procedures.** The cleaning and closure procedures listed in one of the following documents must be used as guidance for complying with this part:

A. American Petroleum Institute 1604, Removal and Disposal of Used Underground Petroleum Storage Tanks;

B. American Petroleum Institute 1631, Interior Lining of Underground Storage Tanks; or

C. American Petroleum Institute 2015, Cleaning Petroleum Storage Tanks.

7150.0420 ASSESSING THE SITE AT CLOSURE OR CHANGE IN SERVICE.

When removing or closing a tank or making a change in service to storage of a nonregulated substance, owners and operators must measure through laboratory analysis for the presence of a release where contamination is most likely to be present at the underground storage tank site. If contaminated soils, contaminated groundwater, or free product as a liquid or vapor is discovered by this measurement or by any other manner, owners and operators must notify the agency immediately and begin corrective action according to *Minnesota Statutes*, section 115.061. In selecting sample types, sample locations, and measurement methods, owners and operators must consider

KEY: PROPOSED RULES SECTION — Underlining indicates additions to existing rule language. ~~Strike outs~~ indicate deletions from existing rule language. If a proposed rule is totally new, it is designated "all new material." **ADOPTED RULES SECTION** — Underlining indicates additions to proposed rule language. ~~Strike outs~~ indicate deletions from proposed rule language.

the method of closure, the nature of the stored substance, the type of backfill, the depth to groundwater, and other factors appropriate for identifying the presence of a release. The requirements of this part are satisfied if one of the external release detection methods allowed in part 7150.0330, items F and G, is operating according to the requirements of part 7150.0330 at the time of removal, closure, or making a change in service to storage of a nonregulated substance, and indicates no release has occurred.

7150.0430 APPLICABILITY TO PREVIOUSLY CLOSED UNDERGROUND STORAGE TANK SYSTEMS.

When directed by the commissioner, the owner and operator of an underground storage tank system permanently closed before December 22, 1988, must assess the excavation zone and close the underground storage tank system according to parts 7150.0400 to 7150.0440 if releases from the underground storage tank may, in the judgment of the commissioner, pose a current or potential threat to human health and the environment.

7150.0440 CLOSURE RECORDS.

Owners and operators must maintain records according to part 7150.0240 that are capable of demonstrating compliance with closure requirements under parts 7150.0400 to 7150.0440. The results of the excavation zone assessment required in part 7150.0420 must be maintained for at least three years after completion of permanent closure or change in service in one of the following ways:

A. by the owners and operators who took the underground storage tank system out of service;

B. by the current owners and operators of the underground storage tank system site; or

C. by mailing these records to the commissioner if they cannot be maintained at the closed facility.

7150.0500 INCORPORATION BY REFERENCE.

Subpart 1. **Scope.** For purposes of chapter 7150, the documents in subpart 2 are incorporated by reference. They can be found at the Minnesota State Law Library, Ford Building, 117 University Avenue, Saint Paul, Minnesota 55155 or at the addresses indicated. If any of the documents are amended, and if the amendments are incorporated by reference or otherwise made a part of federal technical rules at Code of Federal Regulations, title 40, part 280, then the amendments to documents are also incorporated by reference in this chapter.

Subp. 2. **Referenced standards.** The documents incorporated by reference in this chapter are listed in items A to K:

A. American Societies of Mechanical Engineers, 345 East 47th Street, New York, New York 10017.

(1) B31.3, Chemical Plant and Petroleum Refinery Piping (1987); and

(2) B31.4, Liquid Transportation Systems for Hydrocarbons, Liquid Petroleum Gas, Anhydrous Ammonia and Alcohols (1986).

B. American Petroleum Institute, 1220 L Street Northwest, Washington, D.C. 20005.

(1) 1604, Removal and Disposal of Used Underground Petroleum Storage Tanks (1987);

(2) 1615, Installation of Underground Petroleum Storage Systems (1987);

(3) 1621, Bulk Liquid Stock Control at Retail Outlets (1987);

(4) 1626, Storing and Handling Ethanol and Gasoline-Ethanol Blends at Distribution Terminals and Service Stations (1985);

(5) 1627, Storing and Handling of Gasoline-Methanol/Cosolvent Blends at Distribution Terminals and Service Stations (1986);

(6) 1631, Interior Lining of Underground Storage Tanks (1987);

(7) 1632, Cathodic Protection of Underground Petroleum Storage Tanks and Piping Systems (1987);

(8) 2015, Cleaning Petroleum Storage Tanks (1985); and

(9) 2200, Repairing Crude Oil, Liquefied Petroleum Gas and Product Pipelines (1983).

C. American Society of Testing and Materials, 1916 Race Street, Philadelphia, Pennsylvania 19103.

D4021-86, Standard Specification for Glass-Fiber-Reinforced Polyester Underground Petroleum Storage Tanks (1986).

D. Association of Composite Tanks, 108 North State Street, Suite 720, Chicago, Illinois 60602.

ACT-100, Specification for the Fabrication of FRP Clad/Composite Underground Storage Tanks (1989).

E. National Association of Corrosion Engineers, Publications Department, P.O. Box 218340, Houston, Texas 77218.

(1) RP-01-69, Control of External Corrosion on Underground or Submerged Metallic Piping Systems (1983); and

(2) RP-02-85, Control of External Corrosion on Metallic Buried, Partially Buried, or Submerged Liquid Storage Systems (1985).

F. National Fire Protection Association, Batterymarch Park, Quincy, Massachusetts 02269.

(1) 30, Flammable and Combustible Liquids Code (1987); and

(2) 385, Standard for Tank Vehicle for Flammable and Combustible Liquids (1985).

G. National Leak Prevention Association, 4090 Rosehill Avenue, Cincinnati, Ohio 45229.

631, Spill Prevention, Minimum 10-Year Life Extension of Existing Steel Underground Tanks by Lining Without the Addition of Cathodic Protection (1988).

H. Petroleum Equipment Institute, P.O. Box 2380, Tulsa, Oklahoma 74101.

RP100, Recommended Practices for Installation of Underground Liquid Storage Systems (1990).

I. Steel Tank Institute, 728 Anthony Trail, Northbrook, Illinois 60062.

(1) Specifications for STI-P_3 System of External Corrosion Protection of Underground Steel Storage Tanks (1987);

(2) Steel Tank Institute Standard for Dual Wall Underground Steel Storage Tanks (undated); and

(3) STI F894-89, Steel Tank Institute Specification for External Corrosion Protection of FRP Composite Steel Underground Storage Tanks (1989).

J. Underwriters Laboratories Inc., 333 Pfingsten Road, Northbrook, Illinois 60062.

(1) UL 58, Steel Underground Tanks for Flammable and Combustible Liquids (1986);

(2) UL 567, Pipe Connectors for Flammable and Combustible Liquids and LP-Gas (1989);

(3) UL 1316, Glass-Fiber-Reinforced Plastic Underground Storage Tanks for Petroleum Products (1983); and

(4) UL 1746, Corrosion Protection Systems for Underground Storage Tanks (1989).

K. Underwriters Laboratories of Canada, 7 Crouse Road, Scarborough, Ontario, Canada M1R 3A9.

(1) CAN4-S603.1-M85, Standard for Galvanic Corrosion Protection Systems for Steel Underground Tanks for Flammable and Combustible Liquids (1985);

(2) CAN4-S603-M85, Standard for Steel Underground Tanks for Flammable and Combustible Liquids (1985);

(3) CAN4-S615-M83, Standard for Reinforced Plastic Underground Tanks for Petroleum Products (1983);

(4) CAN4-S631-M84, Standard for Isolating Bushings for Steel Underground Tanks Protected with Coatings and Galvanic Systems (1984);

(5) CAN4-S633-M84, Flexible Underground Hose Connectors for Flammable and Combustible Liquids (1984); and

(6) ULC Subject C107C-M1984, Guide for Glass Fibre Reinforced Plastic Pipe and Fittings for Flammable Liquids (1984).

Department of Public Service

Proposed Permanent Rules Relating to Minnesota Energy Code

Notice of Intent to Amend a Rule Without a Public Hearing and Notice of Intent to Adopt a Rule With a Public Hearing if Twenty-Five or More Persons Request a Hearing

NOTICE IS HEREBY GIVEN that the Minnesota Department of Public Service intends to adopt amendments to *Minnesota Rules* Chapter 7670, without a public hearing following the procedures set forth in the *Minnesota Statutes*, sections 14.22 to 14.28. Authority for the adoption of these rules is contained in *Minnesota Statutes*, section 216C.19, subdivision 8.

All persons have 30 days in which to submit comment in support of or in opposition to any part or subpart of the proposed amendments. Comment is encouraged. Each comment should identify the proposed amendment addressed, the reason for the comment, and any change proposed.

All persons may make a written request for a public hearing on the proposed amendments within the 30-day comment period. If

KEY: PROPOSED RULES SECTION — Underlining indicates additions to existing rule language. ~~Strike outs~~ indicate deletions from existing rule language. If a proposed rule is totally new, it is designated "all new material." **ADOPTED RULES SECTION** — Underlining indicates additions to proposed rule language. ~~Strike outs~~ indicate deletions from proposed rule language.

JAMES SCHEIBEL
MAYOR

CITY OF SAINT PAUL
DEPARTMENT OF PUBLIC WORKS
THOMAS J. EGGUM, DIRECTOR
600 City Hall Annex, Saint Paul, Minnesota 55102
612-298-4241

RECEIVED
MAR 05 1991
MPCA, HAZARDOUS
WASTE DIVISION

March 4, 1991

Mr. Thomas P. Clark
Minnesota Pollution Control Agency
Tanks and Spills Section
Hazardous Waste Division
520 North Lafayette Road
Saint Paul, Minnesota 55155

Re: Proposed Permanent Rules Relating to
Underground Storage Tanks

Dear Mr. Clark:

The Department of Public Works has reviewed the above referenced proposal and recommends an addition to part 7150.0330,G.

Since monitoring wells are frequently placed in the City right-of-way, a clarification is recommended. Besides State regulations, all monitoring wells placed within the City right-of-way must also comply with local requirements. The City of Saint Paul requires a Use-of-Street permit to be obtained, for any obstructions in the City right-of-way, in accordance with Chapter 125 of the Saint Paul Legislative Code. A sample of a monitoring well permit site and plan is attached.

Therefore, we are proposing a change similar to the following:

7150.0330,G. Testing or monitoring for liquids in the groundwater must meet the provisions of Chapter 4725; must comply with local requirements when located within local public right-of-way, as well as meet the following requirements:

Thank you for your consideration of this matter. Please call 292-6122, if you have any questions.

Sincerely,

RA Person

Richard A. Person, Manager
Infrastructure Management Services

RAP/jht

o result in a vapor level that is detectable by the monitoring devices located in the excavation zone in the event of a release from the tank;

(3) the measurement of vapors by the monitoring device is not rendered inoperative by the groundwater, rainfall, or soil moisture or other known interferences so that a release could go undetected for more than 30 days;

(4) the level of background contamination in the excavation zone will not interfere with the method used to detect releases from the tank;

(5) the vapor monitoring points are designed and operated to detect any significant increase in concentration above background of the regulated substance stored in the tank system, a component or components of that substance, or a tracer compound placed in the tank system;

(6) in the underground storage tank excavation zone, the site is assessed to ensure compliance with the requirements in subitems (1) to (4) and to establish the number and positioning of vapor monitoring points that will detect releases within the excavation zone from any part of the tank that routinely contains product; and

(7) vapor monitoring points are clearly marked and secured to avoid unauthorized access and tampering.

G. Testing or monitoring for liquids in the groundwater must meet the provisions of chapter 4725, as well as the following requirements:

(1) the regulated substance stored is immiscible in water and has a specific gravity of less than one;

(2) groundwater is never more than 20 feet from the ground surface and the hydraulic conductivity of the soil between the underground storage tank system and the monitoring wells or devices is not less than 0.01 centimeters per second, for example, the soil should consist of gravels, coarse to medium sands, coarse silts, or other permeable materials;

(3) the slotted part of the monitoring well casing must be designed to prevent migration of natural soils or filter pack into the well and to allow entry of regulated substance on the water table into the well under both high and low groundwater conditions;

(4) monitoring wells are sealed from the ground surface to the top of the filter pack;

(5) monitoring wells or devices intercept the excavation zone or are as close to it as is technically feasible;

(6) the continuous monitoring devices or manual methods used can detect the presence of at least one-eighth of an inch of free product on top of the groundwater in the monitoring wells;

(7) within and immediately below the underground storage tank system excavation zone, the site is assessed to ensure compliance with the requirements in subitems (1) to (5), and to establish the number and positioning of monitoring wells or devices that will detect releases from any part of the tank that routinely contains product; and

(8) monitoring wells are clearly marked and secured to avoid unauthorized access and tampering.

H. Interstitial monitoring between the underground storage tank system and a secondary barrier immediately around or beneath it may be used, but only if the system is designed, constructed, and installed to detect a leak from any part of the tank that routinely contains product and also meets one of the requirements of subitems (1) to (3).

(1) For double-walled underground storage tank systems, the sampling or testing method can detect a release through the inner wall in any part of the tank that routinely contains product. The provisions outlined in the Steel Tank Institute's Standard for Dual Wall Underground Storage Tanks may be used as guidance for aspects of the design and construction of underground steel double-walled tanks.

(2) For underground storage tank systems with a secondary barrier within the excavation zone, the sampling or testing method used can detect a release between the underground storage tank system and the secondary barrier according to the following requirements:

(a) the secondary barrier around or beneath the underground storage tank system consists of artificially constructed material that is sufficiently thick and impermeable, being at least 10^{-6} centimeters per second for the regulated substance stored, to direct a release to the monitoring point and permit its detection;

(b) the barrier is compatible with the regulated substance stored so that a release from the underground storage tank system will not cause a deterioration of the barrier allowing a release to pass through undetected;

KEY: PROPOSED RULES SECTION — Underlining indicates additions to existing rule language. ~~Strike outs~~ indicate deletions from existing rule language. If a proposed rule is totally new, it is designated "all new material." **ADOPTED RULES SECTION** — Underlining indicates additions to proposed rule language. ~~Strike outs~~ indicate deletions from proposed rule language.

ORIGINAL — To Permittee
YELLOW — Finance
PINK — P.W. Inspector
GOLD — Office Copy
4-CC's = Police Traffic Div., Fire Dept., Traffic Oper., Sanitation

CITY OF SAINT PAUL DEPARTMENT OF PUBLIC WORKS

APPLICATION FOR PERMIT

FOR

USE OF STREET RIGHT-OF-WAY

04039

SECTION 125 CITY OF SAINT PAUL LEGISLATIVE CODE
VIOLATION OF THIS SECTION IS A MISDEMEANOR

APPLIED: 2-1-91	EFFECTIVE: 2-1[illegible]-91	EXPIRES: 5-12-91	HOURS of operation: 24 HOURS / DAY

PERMISSION IS REQUESTED FOR THE USE OF THE

E side of FAIRVIEW AVE, between ST. CLAIR and BERKELEY

For a length of 10 feet, from IN FRONT OF 244 FAIRVIEW AVENUE

For a width of 10 feet, to include: ☐ sidewalk ☒ boulevard ☐ 8' parking lane ☐ 10' traffic lane ☐ alley

For (type of work) MONITORING WELL (#4)

REQUIREMENTS

- ☐ Fence
- ☒ Barricades BUMPER POSTS WITH HIGH INTENSITY REFLECTIVE TAPE
- ☒ Warning lights
- ☐ Hood meters—call Traffic Op. 489-8871
- ☐ 4' Walkway around the area
- ☐ Flagger or off duty Police officer wherever traffic and pedestrian conditions require.
- ☐ Walk through scaffold over sidewalk (7' min. vertical clearance)
- ☐ Equipment must be removed from street at rush hours and when not in use.
- ☐ Other

PERMITTEE: THE UNDERSIGNED AGREES TO ABIDE BY ALL ORDINANCES OF THE CITY OF SAINT PAUL, MINNESOTA

AMOCO — 5001 WEST 80TH STREET - STE. 890 — BLOOMINGTON, MN 55437
Print — name Permittee (firm) (address)

KIRK STEINLE/LIZ METZEN - DELTA ENVIRONMENTAL 636-2427 — 831-3464 X 239
Print — name Authorized Employee (contact) (phone)

Signature (date)

THIS PERMIT MAY BE REVOKED BY AN AGENT OF THE DIRECTOR OF PUBLIC WORKS OR ANY POLICE OFFICER

FAILURE ON THE PART OF PERMITTEE TO RESTORE THE ABOVE DESCRIBED PREMISES TO ITS ORIGINAL CONDITION WILL CAUSE THIS DEPARTMENT TO MAKE SUCH RESTORATION, THE COST OF WHICH SHALL BE CHARGED TO PERMITTEE AND PAID FOR BY PERMITTEE. PERMIT WILL BE KEPT AT THE PLACE REFERRED TO HEREIN AND BE SHOWN TO ANY POLICE OFFICER OR INSPECTOR ON DEMAND AND DOES NOT AUTHORIZE OR ALLOW INTERFERENCE WITH THE WORK OF ANY CONTRACT MADE OR TO BE MADE WITH THE CITY OF ST. PAUL.

☐ TEMPORARY
☐ PERIOD
☐ VARIOUS LOCATIONS

DATE _____ 19 ____

THE ABOVE PREMISES HAVE / HAVE NOT BEEN RESTORED SATISFACTORILY.

BY _____
DEPARTMENT OF PUBLIC WORKS
MAINTENANCE SERVICES DIVISION JHT

XX ☐ SINGLE FEE
☐ DOUBLE FEE STARTED WORK NO PERMIT

FEE $ 105.00

FEE MUST BE PAID TO: CITY OF ST. PAUL
CK 1146

DIRECTOR OF PUBLIC WORKS
BY _____
AUTHORIZED EMPLOYEE
DATE OF ISSUANCE 2-12-91
TIME 11:00 A.M. XX P.M.

ORIGINAL — To Permittee
YELLOW — Finance
PINK — P.W. Inspector
GOLD — Office Copy
4-CC's = Police Traffic Div., Fire Dept., Traffic Oper., Sanitation

CITY OF SAINT PAUL DEPARTMENT OF PUBLIC WORKS

APPLICATION FOR PERMIT

FOR

USE OF STREET RIGHT-OF-WAY

04040

SECTION 125 CITY OF SAINT PAUL LEGISLATIVE CODE
VIOLATION OF THIS SECTION IS A MISDEMEANOR

APPLIED: 2-1-91	EFFECTIVE: 2-12-91	EXPIRES: 5-12-91	HOURS of operation: 24 HOURS/DAY

PERMISSION IS REQUESTED FOR THE USE OF THE

N side of ST. CLAIR AVENUE, between FAIRVIEW and HOWELL

For a length of 10 feet, from IN FRONT OF 1821 ST. CLAIR AVENUE

For a width of 10 feet, to include: ☐ sidewalk ☒ boulevard ☐ 8′ parking lane ☐ 10′ traffic lane ☐ alley

For (type of work) MONITORING WELL (1A)

REQUIREMENTS

- ☐ Fence
- ☒ Barricades BUMPER POSTS WITH HIGH
- ☒ Warning lights INTENSITY REFLECTIVE TAPE
- ☐ Hood meters—call Traffic Op. 489-8871
- ☐ 4′ Walkway around the area
- ☐ Flagger or off duty Police officer wherever traffic and pedestrian conditions require.
- ☐ Walk through scaffold over sidewalk (7′ min. vertical clearance)
- ☐ Equipment must be removed from street at rush hours and when not in use.
- ☐ Other

PERMITTEE: THE UNDERSIGNED AGREES TO ABIDE BY ALL ORDINANCES OF THE CITY OF SAINT PAUL, MINNESOTA

AMOCO — 5001 W. 80TH ST. STE 890 — BLOOMINGTON, MN 55437
Print — name Permittee (firm) (address)

KIRK STEINLE/LIZ METZEN. (DELTA ENVIRONMENTAL — 636-2427 — 831-3463 Ext. 239
Print — name Authorized Employee (contact) (phone)

Signature (date)

THIS PERMIT MAY BE REVOKED BY AN AGENT OF THE DIRECTOR OF PUBLIC WORKS OR ANY POLICE OFFICER

FAILURE ON THE PART OF PERMITTEE TO RESTORE THE ABOVE DESCRIBED PREMISES TO ITS ORIGINAL CONDITION WILL CAUSE THIS DEPARTMENT TO MAKE SUCH RESTORATION, THE COST OF WHICH SHALL BE CHARGED TO PERMITTEE AND PAID FOR BY PERMITTEE. PERMIT WILL BE KEPT AT THE PLACE REFERRED TO HEREIN AND BE SHOWN TO ANY POLICE OFFICER OR INSPECTOR ON DEMAND AND DOES NOT AUTHORIZE OR ALLOW INTERFERENCE WITH THE WORK OF ANY CONTRACT MADE OR TO BE MADE WITH THE CITY OF ST. PAUL.

☐ TEMPORARY
☐ PERIOD
☐ VARIOUS LOCATIONS

DATE _____ 19 ____

THE ABOVE PREMISES HAVE / HAVE NOT BEEN RESTORED SATISFACTORILY.

BY _____
DEPARTMENT OF PUBLIC WORKS
MAINTENANCE SERVICES DIVISION

jht

☒ SINGLE FEE
☐ DOUBLE FEE STARTED WORK NO PERMIT

FEE $ 105.00

FEE MUST BE PAID TO: CITY OF ST. PAUL

CK 1146

DIRECTOR OF PUBLIC WORKS
BY _____
AUTHORIZED EMPLOYEE

DATE OF ISSUANCE 2-12-91

TIME 11:00 A.M. XX P.M.

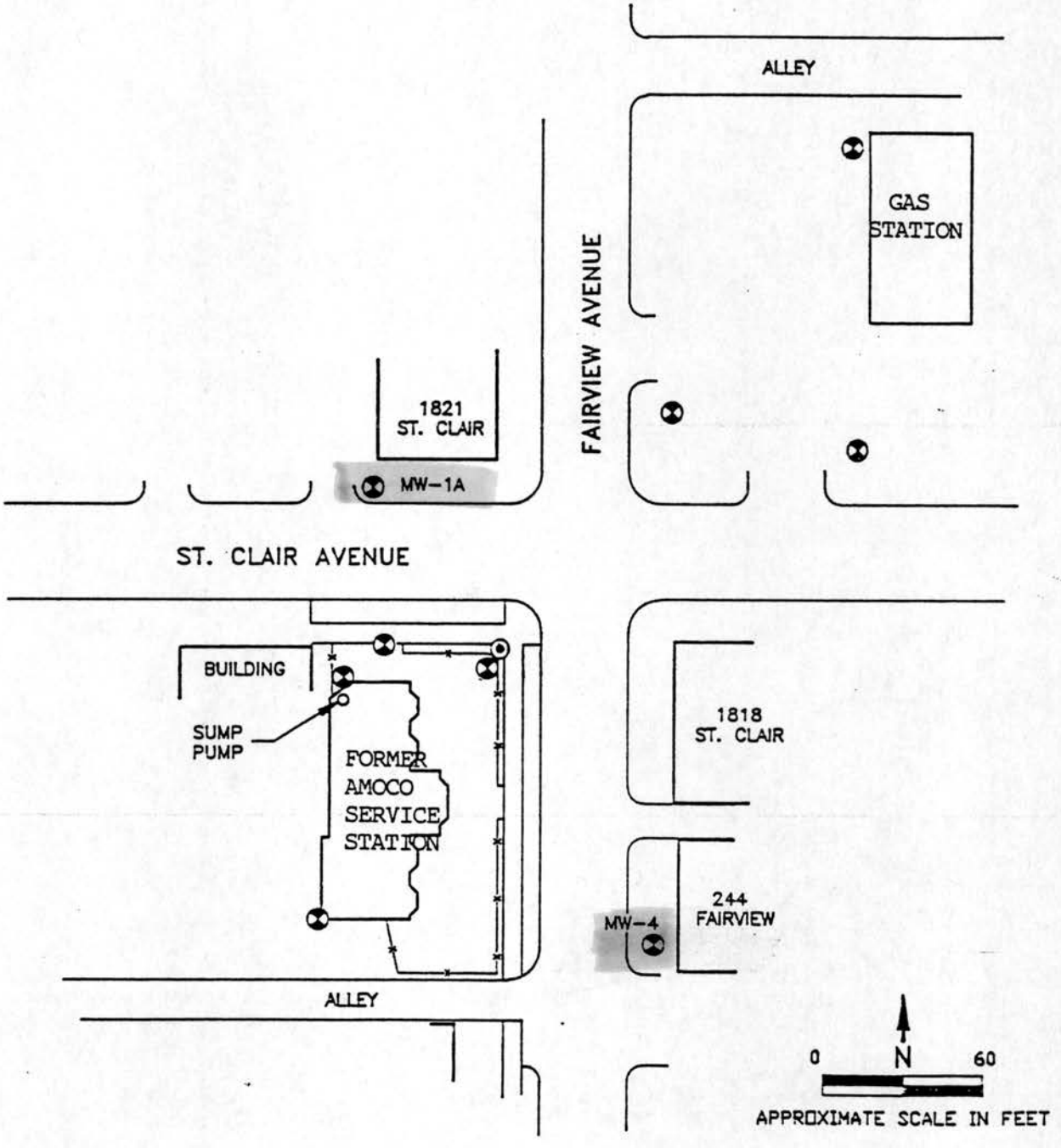

LEGEND

- MONITORING WELL LOCATION
- RECOVERY WELL LOCATION

FIGURE
MONITORING AND RECOVERY WELL LOCATION MAP

ST. PAUL, MINNESOTA

PROJECT NO.	PREPARED BY	REVIEWED BY	
10-90-219	LM/DD		Delta Environmental Consultants, Inc.
DATE	REVISION NO.	FILE NAME	
12/13/90		90219-02	

STATE OF MINNESOTA
POLLUTION CONTROL AGENCY

In the Matter of the Proposed Rules Governing Underground Storage Tanks, Minn. Rules pts. 7150.0010 to 7150.0500

AFFIDAVIT OF MAILING OF NOTICE OF ORDER WITHDRAWING RULES, NOTICE OF INTENT TO ADOPT RULES WITHOUT A PUBLIC HEARING, AND CERTIFICATE OF MAILING LIST

STATE OF MINNESOTA)
) SS.
COUNTY OF RAMSEY)

Thomas P. Clark, being duly sworn says:

I hereby certify that the list of persons and associations who have requested, pursuant to Minn. Stat. §§ 14.14, subd. 1a and 14.22 (1990) that there names be placed on the Minnesota Pollution Control Agency's rulemaking mailing list is accurate, complete, and current as of this 14th day of February, 1991.

That on the 14th day of February, 1991, at the City of St. Paul, County of Ramsey, State of Minnesota, I mailed the attached Notice of Order Withdrawing Rules, and Notice of Intent to Adopt Rules Without a Public Hearing by depositing in the State of Minnesota Central Mail System or in the United States Mail for first class mailing a copy thereof, with postage prepaid, to all persons and associations on the aforementioned mailing list.

Thomas P. Clark

Subscribed and sworn to before me
this 14 day of February, 1991.

Diane Fox
Notary Public

DIANE FOX
NOTARY PUBLIC — MINNESOTA
RAMSEY COUNTY
My commission expires 2-35-96

Interested Party Mailing List--Ch. 7150--1/22/91 Board Item and Notice Mailings

Mr. Brian Ettesvold
Minnesota Service Station Association
1705 Marion St.
St. Paul, MN 55113

Mr. Robert Krogman
Northwest Petroleum Association
2345 Rice St.
St. Paul, MN 55113

Mr. Darryl Bunge
Minnesota Petroleum Association
350 St. Peter St., Suite 1025
St. Paul, MN 55102

Mr. Steve Pettersen
Minnesota Mechanical Contractors Association
766 Transfer Rd.
St Paul, MN 55114

Mr. Robert James
Office of State Fire Marshall
285 Bigelow Bldg.
450 N. Syndicate St.
St. Paul, MN 55104

Mr. George Halloran
U. S. Environmental Protection Agency
Region 5--Office of Underground Storage Tanks
230 S. Dearborn St.
Chicago, IL 60604

Attachment 2: Proposed Rule for Noticing

Office of the Revisor of Statutes

Administrative Rules

TITLE: Proposed Permanent Rules Relating to Underground Storage Tanks

AGENCY: Pollution Control Agency

MINNESOTA RULES: Chapter 7150

INCORPORATIONS BY REFERENCE:

See Part 7150.0500, subpart 2.

The attached rules are approved for publication in the State Register

Carla M. Riehle
Assistant Revisor

INCORPORATIONS BY REFERENCE: Part 7150.0500 --

American Societies of Mechanical Engineers: B31.3, Chemical Plant and Petroleum Refinery Piping (1987); B31.4, Liquid Transportation Systems for Hydrocarbons, Liquid Petroleum Gas, Anhydrous Ammonia and Alcohols (1986).
American Petroleum Institute: 1604, Removal and Disposal of Used Underground Petroleum Storage Tanks (1987); 1615, Installation of Underground Petroleum Storage Systems (1987); 1621, Bulk Liquid Stock Control at Retail Outlets (1987); 1626, Storing and Handling Ethanol and Gasoline-Ethanol Blends at Distribution Terminals and Service Stations (1985); 1627, Storing and Handling of Gasoline-Methanol/Cosolvent Blends at Distribution Terminals and Service Stations (1986); 1631, Interior Lining of Underground Storage Tanks (1987); 1632, Cathodic Protection of Underground Petroleum Storage Tanks and Piping Systems (1987); 2015, Cleaning Petroleum Storage Tanks (1985); 2200, Repairing Crude Oil, Liquefied Petroleum Gas and Product Pipelines (1983).
American Society of Testing and Materials: D4021-86, Standard Specification for Glass-Fiber-Reinforced Polyester Underground Petroleum Storage Tanks (1986).
Association of Composite Tanks: ACT-100, Specification for the Fabrication of FRP Clad/Composite Underground Storage Tanks (1989).
National Association of Corrosion Engineers: RP-01-69, Control of External Corrosion on Underground or Submerged Metallic Piping Systems (1983); RP-02-85, Control of External Corrosion on Metallic Buried, Partially Buried, or Submerged Liquid Storage Systems (1985).
National Fire Protection Association: 30, Flammable and Combustible Liquids Code (1987); 385, Standard for Tank Vehicle for Flammable and Combustible Liquids (1985).
National Leak Prevention Association: 631, Spill Prevention, Minimum 10-Year Life Extension of Existing Steel Underground Tanks by Lining Without the Addition of Cathodic Protection (1988).
Petroleum Equipment Institute: RP100, Recommended Practices for Installation of Underground Liquid Storage Systems (1990).
Steel Tank Institute: Specifications for STI-P_3 System of External Corrosion Protection of Underground Steel Storage Tanks (1987); Steel Tank Institute Standard for Dual Wall Underground Steel Storage Tanks (undated); STI F894-89, Steel Tank Institute Specification for External Corrosion Protection of FRP Composite Steel Underground Storage Tanks (1989).
Underwriters Laboratories Inc.: UL 58, Steel Underground Tanks for Flammable and Combustible Liquids (1986); UL 567, Pipe Connectors for Flammable and Combustible Liquids and LP-Gas (1989); UL 1316, Glass-Fiber-Reinforced Plastic Underground Storage Tanks for Petroleum Products (1983); UL 1746, Corrosion Protection Systems for Underground Storage Tanks (1989).
Underwriters Laboratories of Canada: CAN4-S603.1-M85, Standard for Galvanic Corrosion Protection Systems for Steel Underground Tanks for Flammable and Combustible Liquids (1985); CAN4-S603-M85, Standard for Steel Underground Tanks for Flammable and Combustible Liquids (1985); CAN4-S615-M83, Standard for Reinforced Plastic Underground Tanks for Petroleum Products (1983); CAN4-S631-M84, Standard for Isolating Bushings for Steel Underground Tanks Protected with Coatings and Galvanic Systems (1984); CAN4-S633-M84, Flexible Underground Hose Connectors for Flammable and Combustible Liquids (1984); ULC Subject C107C-M1984, Guide for Glass Fibre Reinforced Plastic Pipe and Fittings for Flammable Liquids (1984).

Available at the Minnesota State Law Library.

Pollution Control Agency

Proposed Permanent Rules Relating to Underground Storage Tanks

Rules as Proposed (all new material)

PROGRAM SCOPE AND INTERIM STANDARDS

7150.0010 APPLICABILITY.

Subpart 1. **Scope.** The requirements of this chapter apply to all owners and operators of an underground storage tank system as defined in part 7150.0030, except as otherwise provided in this subpart and subparts 2 and 3. Any underground storage tank system listed in subpart 3 must meet the requirements of part 7150.0020.

Subp. 2. **Exclusions.** The following underground storage tank systems are excluded from the requirements of this chapter:

A. an underground storage tank system holding hazardous wastes listed or identified under chapter 7045 or Code of Federal Regulations, title 40, part 261, or a mixture of such hazardous waste and other regulated substances;

B. a wastewater treatment tank system that is part of a wastewater treatment facility regulated under United States Code, title 33, section 1317 or 1342;

C. equipment or machinery that contains regulated substances for operational purposes such as hydraulic lift tanks and electrical equipment tanks;

D. an underground storage tank system with a capacity of 110 gallons or less;

E. an underground storage tank system that contains a de minimus concentration of regulated substances;

F. an emergency spill or overflow containment underground storage tank system that is expeditiously emptied after use;

G. a farm or residential tank of 1,100 gallons or less capacity used for storing motor fuel for noncommercial purposes;

Approved by Revisor

H. a tank of 1,100 gallons or less capacity used exclusively for storing heating oil for consumptive use on the premises where stored;

I. a septic tank;

J. a pipeline facility, including gathering lines, regulated under United States Code, title 49, chapter 24 or 29;

K. a surface impoundment, pit, pond, or lagoon;

L. a storm water or wastewater collection system;

M. a flow-through process tank; and

N. a storage tank situated in an underground area such as a basement, cellar, mineworking, drift, shaft, or tunnel if the storage tank is located upon or above the surface of the floor.

Subp. 3. **Deferrals.** Parts 7150.0100 to 7150.0440 do not apply to any of the following types of underground storage tank systems:

A. wastewater treatment tank systems;

B. underground storage tank systems containing radioactive material that are regulated under the Atomic Energy Act of 1954, United States Code, title 42, sections 2011 to 2296;

C. an underground storage tank system that is part of an emergency generator system at nuclear power generation facilities regulated by the Nuclear Regulatory Commission under Code of Federal Regulations, title 10, part 50, Appendix A;

D. airport hydrant fuel distribution systems; and

E. underground storage tank systems with field-constructed tanks.

Subp. 4. **Release detection deferrals.** Parts 7150.0300 to 7150.0350 do not apply to an underground storage tank system that stores fuel solely for use by emergency power generators.

Subp. 5. **Heating oil underground storage tank deferrals.** Parts 7150.0100 to 7150.0440, except 7150.0120, subparts 2 and 6, do not apply to an underground storage tank system of over 1,100 gallons capacity used exclusively for storing heating oil for consumptive use on the premises where stored.

Approved
by Revisor _____

7150.0020 INTERIM STANDARDS FOR DEFERRED UNDERGROUND STORAGE TANK SYSTEMS.

Subpart 1. **Interim standards.** No person may install an underground storage tank system listed in part 7150.0010, subparts 3 to 5, for the purpose of storing regulated substances unless the underground storage tank system, whether of single- or double-wall construction:

A. is installed according to requirements of the American Petroleum Institute Bulletin 1615 to the extent applicable, and all manufacturer's recommendations;

B. will prevent releases due to corrosion or structural failure for the operational life of the underground storage tank system;

C. is cathodically protected against corrosion, constructed of noncorrodible material, steel clad with a noncorrodible material, or designed in a manner to prevent the release or threatened release of any stored substance; and

D. is constructed or lined with material that is compatible with the stored substance.

Subp. 2. **Systems without corrosion protection.** Notwithstanding subpart 1, an underground storage tank system without corrosion protection may be installed at a site that is determined by a corrosion expert not to be corrosive enough to cause it to have a release due to corrosion during its operating life. Owners and operators must maintain records that demonstrate compliance with the requirements of this subpart for the remaining life of the tank. The determination required by this subpart must be in accordance with the National Association of Corrosion Engineers, Standard RP-02-85.

7150.0030 DEFINITIONS.

Subpart 1. **Scope.** For the purposes of this chapter, the following terms and abbreviations have the meanings given them. Terms that are not specifically defined have the meanings given them in Minnesota Statutes, sections 115.01, 115C.02, and 116.46.

Subp. 2. **Aboveground release.** "Aboveground release" means

Approved by Revisor _____

a release to the surface of the land or to surface water, including, but not limited to, releases from the aboveground part of an underground storage tank system and aboveground releases associated with overfills and transfer operations as the regulated substance moves to or from an underground storage tank system.

Subp. 3. **Agency.** "Agency" means the Minnesota Pollution Control Agency.

Subp. 4. **Appurtenances.** "Appurtenances" means devices such as piping, fittings, flanges, valves, and pumps used to distribute, meter, or control the flow of regulated substances to or from an underground storage tank.

Subp. 5. **Belowground release.** "Belowground release" means a release to the subsurface of the land and to groundwater, including, but not limited to, releases from the belowground parts of an underground storage tank system and belowground releases associated with overfills and transfer operations as the regulated substance moves to or from an underground storage tank.

Subp. 6. **Beneath the surface of the ground.** "Beneath the surface of the ground" means beneath the ground surface or otherwise covered with earthen materials.

Subp. 7. **Cathodic protection.** "Cathodic protection" means using a technique to prevent corrosion of a metal surface by making that surface the cathode of an electrochemical cell. For example, a tank system can be cathodically protected through the application of either galvanic anodes or impressed current.

Subp. 8. **Cathodic protection tester.** "Cathodic protection tester" means a person who can demonstrate an understanding of the principles and measurements of all common types of cathodic protection systems as applied to buried or submerged metal piping and tank systems. At a minimum, such persons must have education and experience in soil resistivity, stray current, structure-to-soil potential, and component electrical isolation measurements of buried metal piping and tank systems.

Subp. 9. **Change in service.** "Change in service" means a

Approved by Revisor _____

permanent removal from service or a change in the reported uses, contents, or ownership of an underground storage tank under Minnesota Statutes, section 116.48, subdivision 3, or an upgrade under this chapter.

Subp. 10. **Closure or removal.** "Closure" or "removal" means permanently taking an underground storage tank out of service by either closing it in place, removing it from the ground, or converting it to store a nonregulated substance as required by this chapter.

Subp. 11. **Commissioner.** "Commissioner" means the commissioner of the Minnesota Pollution Control Agency.

Subp. 12. **Compatible.** "Compatible" means the ability of two or more substances to maintain their respective physical and chemical properties upon contact with one another for the design life of the tank system under conditions likely to be encountered in the underground storage tank.

Subp. 13. **Connected piping.** "Connected piping" means underground piping including valves, elbows, joints, flanges, and flexible connectors attached to a tank system through which regulated substances flow. For the purpose of determining how much piping is connected to an individual underground storage tank system, the piping that joins two underground storage tank systems should be allocated equally between them.

Subp. 14. **Consumptive use.** "Consumptive use," with respect to heating oil, means consumed on the premises.

Subp. 15. **Corrosion expert.** "Corrosion expert" means a person who, by reason of thorough knowledge of the physical sciences and the principles of engineering and mathematics acquired by a professional education and related practical experience, is qualified to engage in the practice of corrosion control on buried or submerged metal piping systems and metal tanks. The person must be accredited or certified as being qualified by the National Association of Corrosion Engineers or be a registered professional engineer who has certification or licensing that includes education and experience in corrosion control of buried or submerged metal piping systems and metal

Approved by Revisor _____

tanks.

Subp. 16. **Dielectric material.** "Dielectric material" means a material that does not conduct direct electrical current. Dielectric coatings are used to electrically isolate underground storage tank systems from the surrounding soils. Dielectric bushings are used to electrically isolate parts of the underground storage tank system, for example, tank from piping.

Subp. 17. **Electrical equipment.** "Electrical equipment" means underground equipment that contains dielectric fluid that is necessary for the operation of equipment such as transformers and buried electrical cable.

Subp. 18. **Excavation zone.** "Excavation zone" means the volume containing the tank system and backfill material bounded by the ground surface, walls, and floor of the pit and trenches into which the underground storage tank system is placed at the time of installation.

Subp. 19. **Existing tank system.** "Existing tank system" means a tank system used to contain an accumulation of regulated substances or for which installation began on or before December 22, 1988. However, a tank system containing hazardous materials that is not regulated under Code of Federal Regulations, title 40, part 280, is considered an existing tank system if installation began on or before (insert 90 days after date of adoption). Installation is considered to have begun if:

A. the owner or operator has obtained all federal, state, and local approvals or permits necessary to begin physical construction of the site or installation of the tank system; and

B. either a continuous on-site physical construction or installation program has begun, or the owner or operator has entered into contractual obligations, that cannot be canceled or modified without substantial loss, for physical construction at the site or installation of the tank system to be completed within a reasonable time.

Subp. 20. **Farm tank.** "Farm tank" means a tank located on

Approved
by Revisor _____

a tract of land devoted to the production of crops, raising animals, including fish, range land, nurseries with growing operations, and associated residences and improvements. A farm tank must be located on the farm property.

Subp. 21. **Flow-through process tank.** "Flow-through process tank" means a tank that forms an integral part of a production process through which there is a steady, variable, recurring, or intermittent flow of materials during the operation of the process. Flow-through process tanks do not include tanks used for the storage of materials prior to their introduction into the production process or for the storage of finished products or by-products from the production process.

Subp. 22. **Free product.** "Free product" means a regulated substance that is present as a nonaqueous phase liquid, for example, liquid not dissolved in water.

Subp. 23. **Gathering lines.** "Gathering lines" means a pipeline, equipment, facility, or building used in the transportation of oil or gas during oil or gas production or gathering operations.

Subp. 24. **Hazardous material.** "Hazardous material" means:

A. a substance listed in Code of Federal Regulations, title 49, section 172.101, including petroleum under subpart 38, item C, but not including:

(1) a hazardous waste listed or identified under chapter 7045 or Code of Federal Regulations, title 40, part 261;

(2) petroleum under subpart 38, item A, B, or D; or

(3) a substance that is not liquid at a temperature of 60 degrees Fahrenheit and pressure of 14.7 pounds per square inch absolute; or

B. any mixture of substances identified in item A and petroleum, unless the amount of the substance identified in item A is de minimus.

Subp. 25. **Hazardous material underground storage tank system.** "Hazardous material underground storage tank system" means an underground storage tank system that is used to contain

Approved by Revisor _____

a hazardous material.

Subp. 26. **Heating oil.** "Heating oil" means petroleum that is Nos. 1, 2, and 4 light, No. 4 heavy, No. 5 light, No. 5 heavy, and No. 6 technical grades of fuel oil; other residual fuel oils, including Navy Special Fuel Oil and Bunker C; and other fuels when used as substitutes for one of these fuel oils. Heating oil is typically used in the operation of heating equipment, boilers, or furnaces.

Subp. 27. **Hydraulic lift tank.** "Hydraulic lift tank" means a tank holding hydraulic fluid for a closed-loop mechanical system that uses compressed air or hydraulic fluid to operate lifts, elevators, and other similar devices.

Subp. 28. **Maintenance.** "Maintenance" means the normal operational upkeep to prevent an underground storage tank system from releasing a regulated substance.

Subp. 29. **Motor fuel.** "Motor fuel" means petroleum or a petroleum-based substance that is motor gasoline, aviation gasoline, No. 1 or 2 diesel fuel, or any grade of gasohol, and is typically used in the operation of a motor engine.

Subp. 30. **New tank system.** "New tank system" means a tank system that is or will be used to contain an accumulation of regulated substances and which is not an existing tank system as defined in subpart 19.

Subp. 31. **Noncommercial purposes.** "Noncommercial purposes," with respect to motor fuel, means not for resale.

Subp. 32. **On the premises where stored.** "On the premises where stored," with respect to heating oil, means underground storage tank systems located on the same property where the stored heating oil is used.

Subp. 33. **Operational life.** "Operational life" means the period beginning when installation of the tank system has begun until the time the tank system is properly closed under parts 7150.0400 to 7150.0440.

Subp. 34. **Operator.** "Operator" means a person in control of or having responsibility for the daily operation of the underground storage tank system or a person who was in control

Approved by Revisor _____

of or had responsibility for the daily operation of the tank immediately before discontinuation of its use.

Operator also means a person who is responsible under Minnesota Statutes, section 115C.021, for a release from an underground storage tank containing petroleum, or a person who is responsible under Minnesota Statutes, section 115B.03, for a release from an underground storage tank containing a hazardous material. Operator does not include a person who operates a tank if the tank is not regulated by this chapter.

Subp. 35. **Overfill release.** "Overfill release" means a release occurring when a tank is filled beyond its capacity, resulting in a discharge of the regulated substance to the environment.

Subp. 36. **Owner.** "Owner" means a person who holds title to, controls or possesses an interest in an underground storage tank, and a person who held title to, controlled, or possessed an interest in the tank immediately before discontinuation of its use.

Owner also means a person who is responsible under Minnesota Statutes, section 115C.021, for a release from an underground storage tank containing petroleum, or a person who is responsible under Minnesota Statutes, section 115B.03, for a release from an underground storage tank containing a hazardous material.

Owner does not include a person who owns a tank if the tank is not regulated by this chapter and does not include a person who holds an interest in a tank solely for financial security, unless through foreclosure or other related actions the holder of a security interest has taken possession of the tank.

Subp. 37. **Person.** "Person" means an individual, partnership, association, public or private corporation, or other legal entity, including the United States government, an interstate commission or other body, the state, or any agency, board, bureau, office, department, or political subdivision of the state, but does not include the Minnesota Pollution Control Agency.

Approved
by Revisor _____

Subp. 38. **Petroleum.** "Petroleum" means one of the following substances:

A. gasoline and fuel oil as defined in Minnesota Statutes, section 296.01, subdivisions 3 and 4;

B. crude oil or a fraction of crude oil that is liquid at a temperature of 60 degrees Fahrenheit and pressure of 14.7 pounds per square inch absolute;

C. constituents of gasoline and fuel oil under item A and constituents of crude oil under item B; or

D. petroleum-based substances that are comprised of a complex blend of hydrocarbons derived from crude oil through processes of separation, conversion, upgrading, and finishing, such as motor fuels, jet fuels, distillate fuel oils, residual fuel oils, lubricants, and used oils.

Subp. 39. **Petroleum underground storage tank system.** "Petroleum underground storage tank system" means an underground storage tank system that is used to contain petroleum or a mixture of petroleum with de minimus quantities of hazardous materials.

Subp. 40. **Pipe or piping.** "Pipe" or "piping" means a hollow cylinder or tubular conduit for conveying a regulated substance from one point to another within an underground storage tank system.

Subp. 41. **Pipeline facilities.** "Pipeline facilities," including gathering lines, means new and existing pipe rights-of-way and any associated equipment, facilities, or buildings.

Subp. 42. **Regulated substance.** "Regulated substance" means a hazardous material or petroleum.

Subp. 43. **Release.** "Release" means a spilling, leaking, emitting, discharging, escaping, leaching, or disposing from an underground storage tank into the environment including spills associated with overfills and transfer operations as the regulated substance moves to or from an underground storage tank system. "Release" does not include discharges or designed venting allowed under agency rules.

Approved by Revisor _____

Subp. 44. **Release detection.** "Release detection" means determining whether a release of a regulated substance has occurred from the underground storage tank system into the environment or into the interstitial space between the underground storage tank system and its secondary barrier or secondary containment around it.

Subp. 45. **Repair.** "Repair" means the correction, restoration, modification, or upgrading of a tank system, including, but not limited to, the addition of cathodic protection systems, the replacement of piping, valves, fill pipes or vents, the lining of a tank through the application of materials such as epoxy resins, or any other similar activities that may affect the integrity of the tank system.

Subp. 46. **Residential tank.** "Residential tank" means a tank located on property used primarily for dwelling purposes.

Subp. 47. **Septic tank.** "Septic tank" means a watertight, covered receptacle designed to receive or process through liquid separation or biological digestion, the sewage discharged from a building sewer. The effluent from the receptacle is distributed for disposal through the soil and settled solids and scum from the tank are pumped out periodically and hauled to a treatment facility.

Subp. 48. **Storm water or wastewater collection system.** "Storm water or wastewater collection system" means piping, pumps, conduits, and any other equipment necessary to collect and transport the flow of surface water run-off resulting from precipitation, or domestic, commercial, or industrial wastewater to and from retention areas or areas where treatment is designated to occur. The collection of storm water and wastewater does not include treatment, except where incidental to conveyance.

Subp. 49. **Surface impoundment.** "Surface impoundment" means a natural topographic depression, man-made excavation, or diked area formed primarily of earthen materials, although it may be lined with man-made materials, that is not an injection well.

Approved by Revisor _____

Subp. 50. **Tank.** "Tank" is a stationary device designed to contain an accumulation of regulated substances and constructed of nonearthen materials, such as concrete, steel, and plastic, that provide structural support.

Subp. 51. **Tank system.** "Tank system" has the same meaning as underground storage tank and underground storage tank system.

Subp. 52. **Underground area.** "Underground area" means an underground room such as a basement, cellar, shaft, or vault providing enough space for physical inspection of the exterior of the tank situated on or above the surface of the floor.

Subp. 53. **Underground release.** "Underground release" means a belowground release.

Subp. 54. **Underground storage tank or underground storage tank system.** "Underground storage tank" or "underground storage tank system" means any one or combination of containers including tanks, vessels, enclosures, or structures and underground appurtenances connected to them that is used to contain or dispense an accumulation of regulated substances, and the volume of which, including the volume of underground pipes connected to them, is ten percent or more beneath the surface of the ground. This term does not include any tank or pipes connected to a tank described in part 7150.0010, subpart 2.

Subp. 55. **Upgrade.** "Upgrade" means the addition or retrofit of systems such as cathodic protection, lining, piping, or spill and overfill controls to improve the ability of an underground storage tank system to prevent the release of a regulated substance.

Subp. 56. **Wastewater treatment tank.** "Wastewater treatment tank" means a tank that is designed to receive and treat an influent wastewater through physical, chemical, or biological methods.

UNDERGROUND STORAGE TANK SYSTEMS

DESIGN, CONSTRUCTION, INSTALLATION, AND NOTIFICATION

7150.0100 PERFORMANCE STANDARDS FOR NEW UNDERGROUND STORAGE TANK SYSTEMS.

Approved by Revisor _____

Subpart 1. **Purpose.** To prevent releases due to structural failure, corrosion, or spills and overfills for as long as the underground storage tank system is used to store regulated substances, all owners and operators of new underground storage tank systems must meet the requirements in subparts 2 to 8.

Subp. 2. **Tanks.** Each tank must be properly designed and constructed, and any part underground that routinely contains product must be protected from corrosion using one of the methods specified in items A to E. The corrosion protection methods in items A to D must be in accordance with one of the codes of practice in subpart 3 developed by a nationally recognized association or independent testing laboratory:

A. The tank is constructed of fiberglass-reinforced plastic.

B. The tank is constructed of steel and cathodically protected in the following manner:

(1) the tank is coated with a suitable dielectric material;

(2) field-installed cathodic protection systems are designed by a corrosion expert;

(3) impressed current systems are designed to allow determination of current operating status as required in part 7150.0210, subpart 4; and

(4) cathodic protection systems are operated and maintained according to part 7150.0210.

C. The tank is constructed of a steel- and fiberglass-reinforced plastic composite.

D. The tank is constructed of metal without additional corrosion protection measures provided that:

(1) the tank is installed at a site that is determined by a corrosion expert not to be corrosive enough to cause it to have a release due to corrosion during its operating life; and

(2) owners and operators maintain records that demonstrate compliance with the requirements of subitem (1) for the remaining life of the tank.

Approved by Revisor _____

E. The tank construction and corrosion protection are determined by the commissioner to be designed to prevent the release or threatened release of a stored regulated substance in a manner that is no less protective of human health and the environment than items A to D. The commissioner's determination under this item must be obtained in writing and owners and operators must keep the determination for the life of the tank.

Subp. 3. **Codes of practice for tanks.** Codes of practice for subpart 2 are described in items A to C.

A. The following codes of practice apply to subpart 2, item A:

(1) Underwriters Laboratories UL 1316, Glass-Fiber-Reinforced Plastic Underground Storage Tanks for Petroleum Products;

(2) Underwriters Laboratories of Canada CAN4-S615-M83, Standard for Reinforced Plastic Underground Tanks for Petroleum Products; or

(3) American Society of Testing and Materials D4021-86, Standard Specification for Glass-Fiber-Reinforced Polyester Underground Petroleum Storage Tanks.

B. The following codes of practice apply to subpart 2, item B:

(1) Steel Tank Institute Specifications for STI-P3 System of External Corrosion Protection of Underground Steel Storage Tanks;

(2) Underwriters Laboratories UL 1746, Corrosion Protection Systems for Underground Storage Tanks;

(3) Underwriters Laboratories of Canada CAN4-S603.1-M85, Standard for Galvanic Corrosion Protection Systems for Steel Underground Tanks for Flammable and Combustible Liquids;

(4) Underwriters Laboratories of Canada CAN4-S603-M85, Standard for Steel Underground Tanks for Flammable and Combustible Liquids;

(5) Underwriters Laboratories of Canada CAN4-S631-M84, Standard for Isolating Bushings for Steel

Approved by Revisor _____

Underground Tanks Protected with Coatings and Galvanic Systems;

(6) National Association of Corrosion Engineers RP-02-85, Control of External Corrosion on Metallic Buried, Partially Buried, or Submerged Liquid Storage Systems; or

(7) Underwriters Laboratories UL 58, Steel Underground Tanks for Flammable and Combustible Liquids.

C. The following codes of practice apply to subpart 2, item C:

(1) Underwriters Laboratories UL 1746, Corrosion Protection Systems for Underground Storage Tanks;

(2) Association of Composite Tanks ACT-100, Specification for the Fabrication of FRP Clad Underground Storage Tanks; or

(3) Steel Tank Institute STI F894-89, Specification for External Corrosion Protection of FRP Composite Steel Underground Storage Tanks.

Subp. 4. **Piping.** The piping that routinely contains regulated substances and is in contact with the ground must be properly designed, constructed, and protected from corrosion using one of the methods specified in items A to D. The corrosion protection methods in items A to C must be in accordance with one of the codes of practice in subpart 5 developed by a nationally recognized association or independent testing laboratory:

A. The piping is constructed of fiberglass-reinforced plastic.

B. The piping is constructed of steel and cathodically protected in the following manner:

(1) the piping is coated with a suitable dielectric material;

(2) field-installed cathodic protection systems are designed by a corrosion expert;

(3) impressed current systems are designed to allow determination of current operating status as required in part 7150.0210, subpart 4; and

(4) cathodic protection systems are operated and

Approved by Revisor _____

maintained according to part 7150.0210.

C. The piping is constructed of metal without additional corrosion protection measures, provided that:

(1) the piping is installed at a site that is determined by a corrosion expert to not be corrosive enough to cause it to have a release due to corrosion during its operating life; and

(2) owners and operators maintain records that demonstrate compliance with subitem (1) for the remaining life of the piping.

D. The piping construction and corrosion protection are determined by the commissioner to be designed to prevent the release or threatened release of a stored regulated substance in a manner that is no less protective of human health and the environment than the requirements of items A to C. The commissioner's determination under this item must be obtained in writing and the tank owners and operators must keep the determination for the life of the tank.

Subp. 5. **Codes of practice for piping.** Codes of practice for subpart 4 are described in items A to C.

A. The following codes of practice apply to subpart 4, item A:

(1) Underwriters Laboratories UL 567, Pipe Connectors for Flammable and Combustible Liquids and LP-Gas;

(2) Underwriters Laboratories of Canada CAN4-S633-M84, Flexible Underground Hose Connectors for Flammable and Combustible Liquids; or

(3) Underwriters Laboratories of Canada ULC Subject C107C-M1984, Guide for Glass Fibre Reinforced Plastic Pipe and Fittings for Flammable Liquids.

B. The following codes of practice apply to subpart 4, item B:

(1) National Fire Protection Association 30, Flammable and Combustible Liquids Code;

(2) American Petroleum Institute 1615, Installation of Underground Petroleum Storage Systems;

Approved by Revisor _____

(3) American Petroleum Institute 1632, Cathodic Protection of Underground Petroleum Storage Tanks and Piping Systems; or

(4) National Association of Corrosion Engineers RP-01-69, Control of External Corrosion on Underground or Submerged Metallic Piping Systems.

C. The following codes of practice apply to subpart 4, item C:

(1) National Fire Protection Association 30, Flammable and Combustible Liquids Code; or

(2) National Association of Corrosion Engineers RP-01-69, Control of External Corrosion on Underground or Submerged Metallic Piping Systems.

Subp. 6. **Spill and overfill prevention equipment.**

A. Except as provided in item B, to prevent spilling and overfilling associated with product transfer to the underground storage tank system, owners and operators must use the following spill and overfill prevention equipment:

(1) spill prevention equipment that will prevent release of product to the environment when the transfer hose is detached from the fill pipe, for example, a spill catchment basin; and

(2) overfill prevention equipment that will:

(a) automatically shut off flow into the tank when the tank is no more than 95 percent full; or

(b) alert the transfer operator when the tank is no more than 90 percent full by restricting the flow into the tank or triggering a high-level alarm.

B. Owners and operators are not required to use the spill and overfill prevention equipment specified in item A if:

(1) alternative equipment is used that is determined by the commissioner to be no less protective of human health and the environment than the equipment specified in item A; or

(2) the underground storage tank system is filled by transfers of no more than 25 gallons at one time.

Approved by Revisor _____

The commissioner's determination under subitem (1) must be obtained in writing and the tank owners and operators must keep the determination for the life of the tank.

Subp. 7. **Installation.** All tanks and piping must be properly installed according to the manufacturer's instructions and one of the following codes of practice developed by a nationally recognized association or independent testing laboratory:

A. American Petroleum Institute 1615, Installation of Underground Petroleum Storage Systems;

B. Petroleum Equipment Institute RP 100, Recommended Practices for Installation of Underground Liquid Storage Systems;

C. American National Standards Institute B31.3, Chemical Plant and Petroleum Refinery Piping; or

D. American National Standards Institute B31.4, Liquid Transportation Systems for Hydrocarbons, Liquid Petroleum Gas, Anhydrous Ammonia and Alcohols.

Subp. 8. **Certification of installation.** Owners and operators must demonstrate compliance with subpart 7 by certifying on the underground storage tank notification form required in part 7150.0120 that:

A. the installer is in compliance with certification requirements imposed by the agency under chapter 7105; and

B. all work listed in the manufacturer's installation checklists has been completed.

7150.0110 UPGRADING OF EXISTING UNDERGROUND STORAGE TANK SYSTEMS.

Subpart 1. **Alternatives allowed.** Not later than December 22, 1998, all existing underground storage tank systems must comply with one of the following requirements:

A. new underground storage tank system performance standards under part 7150.0100;

B. the upgrading requirements in subparts 2 to 4; or

C. closure requirements under parts 7150.0400 to 7150.0440, including applicable requirements for corrective

Approved by Revisor _____

action under Minnesota Statutes, section 115.061.

Subp. 2. **Tank upgrading requirements.** Steel tanks must be protected from corrosion using the corrosion protection methods in items A to C.

A. A tank may be upgraded by internal lining if:

(1) the lining is installed according to the requirements of part 7150.0230; and

(2) within ten years after lining, and every five years after that, the lined tank is internally inspected and found to be structurally sound with the lining still performing according to original design specifications.

B. A tank may be upgraded by cathodic protection if the cathodic protection system meets the requirements of part 7150.0100, subpart 2, item B, subitems (2) to (4), and the integrity of the tank is ensured using one of the methods in subitems (1) to (4).

(1) The tank is internally inspected and assessed to ensure that the tank is structurally sound and free of corrosion holes prior to installing the cathodic protection system.

(2) The tank has been installed for less than ten years and is monitored monthly for releases according to part 7150.0330, items E to I.

(3) The tank has been installed for less than ten years and is assessed for corrosion holes by conducting two tightness tests that meet the requirements of part 7150.0330, item D. The first tightness test must be conducted before installing the cathodic protection system. The second tightness test must be conducted between three and six months following the first operation of the cathodic protection system.

(4) The tank is assessed for corrosion holes by a method that is determined by the commissioner to prevent releases in a manner that is no less protective of human health and the environment than subitems (1) to (3).

C. A tank may be upgraded by both internal lining and cathodic protection if:

Approved by Revisor _____

(1) the lining is installed according to part 7150.0230; and

(2) the cathodic protection system meets the requirements of part 7150.0100, subpart 2, item B, subitems (2) to (4).

D. The corrosion protection methods in items A to C must be in accordance with one or more of the following codes of practice developed by a nationally recognized association or independent testing laboratory:

(1) American Petroleum Institute 1631, Interior Lining of Underground Storage Tanks;

(2) National Leak Prevention Association 631, Spill Prevention, Minimum 10-Year Life Extension of Existing Steel Underground Tanks by Lining Without the Addition of Cathodic Protection;

(3) National Association of Corrosion Engineers RP-02-85, Control of External Corrosion on Metallic Buried, Partially Buried, or Submerged Liquid Storage Systems; or

(4) American Petroleum Institute 1632, Cathodic Protection of Underground Petroleum Storage Tanks and Piping Systems.

Subp. 3. **Piping upgrading requirements.** Metal piping that routinely contains regulated substances and is in contact with the ground must meet the requirements of part 7150.0100, subpart 4, item B, subitems (2) to (4).

Subp. 4. **Spill and overfill prevention equipment.** To prevent spilling and overfilling associated with product transfer to the underground storage tank system, all existing underground storage tank systems must comply with new underground storage tank system spill and overfill prevention equipment requirements in part 7150.0100, subpart 6.

7150.0120 NOTIFICATION REQUIREMENTS.

Subpart 1. **Notice of underground storage tank system installation.** At least 30 days before beginning installation of an underground storage tank system under part 7150.0100, owners

Approved by Revisor _____

and operators must notify the commissioner of their intent to install the underground storage tank system.

Subp. 2. **Notification of new tanks and changes in service.** An owner who brings an underground storage tank system into use or makes a change in service to an existing tank system after June 1, 1986, must, within 30 days of bringing such tank into use or making a change in service, submit to the agency, in the form prescribed by the commissioner, a notice of the existence of such tank system or type of change in service, including the information required by Minnesota Statutes, section 116.48, subdivisions 1 and 3.

Subp. 3. **Owner and operator tank system certification.** Owners and operators of new underground storage tank systems must certify in the notification form compliance with the following requirements:

A. installation of tanks and piping under part 7150.0100, subpart 8;

B. cathodic protection of steel tanks and piping under part 7150.0100, subparts 2 and 4;

C. financial responsibility under Code of Federal Regulations, title 40, part 280, subpart H; and

D. release detection under parts 7150.0310 and 7150.0320.

Subp. 4. **Installer tank system certification.** Owners and operators of new underground storage tank systems must ensure that the installer certifies in the notification form that the methods used to install the tanks and piping comply with part 7150.0100, subpart 7, and that the installer is in compliance with certification requirements imposed by chapter 7105.

Subp. 5. **Repairer tank system certification.** Owners and operators of underground storage tank systems must ensure that the repairer certifies in the notification form that the methods used to repair the tanks and piping comply with parts 7150.0110 and 7150.0230 and that the repairer is in compliance with certification requirements imposed by chapter 7105.

Subp. 6. **Tank seller notification.** A person who sells a

Approved by Revisor _____

tank intended to be used as an underground storage tank or property that the seller knows contains an underground storage tank must notify the purchaser of the tank in writing of the owner's notification obligations under subpart 1 and under Minnesota Statutes, section 116.48.

GENERAL OPERATING REQUIREMENTS

7150.0200 SPILL AND OVERFILL CONTROL.

Subpart 1. **Spill and overfill release prevention.** Owners and operators must ensure that releases due to spilling or overfilling do not occur. The owner or operator must ensure that the volume available in the tank is greater than the volume of product to be transferred to the tank before the transfer is made and that the transfer operation is monitored constantly to prevent overfilling and spilling. One of the following codes of practice developed by a nationally recognized association or independent testing laboratory must be used to comply with this subpart:

A. National Fire Protection Association 30, Flammable and Combustible Liquids Code;

B. National Fire Protection Association 385, Standard for Tank Vehicles for Flammable and Combustible Liquids; or

C. American Petroleum Institute 1621, Bulk Liquid Stock Control at Retail Outlets.

Subp. 2. **Reporting and cleanup.** The owner and operator must report, investigate, and cleanup any spills and overfills according to Minnesota Statutes, section 115.061.

7150.0210 OPERATION AND MAINTENANCE OF CORROSION PROTECTION.

Subpart 1. **Owner and operator compliance.** Owners and operators of underground storage tank systems with corrosion protection must comply with the requirements in subparts 2 to 5 to ensure that releases due to corrosion are prevented for as long as the underground storage tank system is used to store regulated substances, or is temporarily closed in accordance with part 7150.0400.

Subp. 2. **Corrosion protection system maintenance.** All

Approved by Revisor _____

corrosion protection systems must be operated and maintained to continuously provide corrosion protection to the metal components of the part of the tank and piping that routinely contains regulated substances and is in contact with the ground.

Subp. 3. **Cathodic protection system maintenance.** All underground storage tank systems equipped with cathodic protection systems must be inspected for proper operation by a qualified cathodic protection tester according to the following requirements:

A. all cathodic protection systems must be tested within six months of installation and at least every three years after that; and

B. the criteria that are used to determine that cathodic protection is adequate as required by this subpart must be according to the code of practice in National Association of Corrosion Engineers RP-02-85, Control of External Corrosion on Metallic Buried, Partially Buried, or Submerged Liquid Storage Systems.

Subp. 4. **Impressed current system maintenance.** Underground storage tank systems with impressed current cathodic protection systems must also be inspected every 60 days to ensure the equipment is running properly.

Subp. 5. **Recordkeeping.** For underground storage tank systems using cathodic protection, records of the operation of the cathodic protection must be maintained according to part 7150.0240 to demonstrate compliance with the performance standards in this part. These records must provide:

A. the results of the last three inspections required in subpart 4; and

B. the results of testing from the last two inspections required in subpart 3.

7150.0220 COMPATIBILITY.

Owners and operators must use an underground storage tank system made of or lined with materials that are compatible with the substance stored in the underground storage tank system.

Approved by Revisor _____

Owners and operators storing alcohol blends may use the following guidance to comply with the requirements of this part:

A. American Petroleum Institute 1626, Storing and Handling Ethanol and Gasoline-Ethanol Blends at Distribution Terminals and Service Stations; or

B. American Petroleum Institute 1627, Storing and Handling of Gasoline-Methanol/Cosolvent Blends at Distribution Terminals and Service Stations.

7150.0230 REPAIRS ALLOWED.

Owners and operators of underground storage tank systems must ensure that repairs will prevent releases due to structural failure or corrosion as long as the underground storage tank system is used to store regulated substances. The owner and operator of the tank shall ensure that the person performing the repairs has been certified under chapter 7105. The repairs must meet the requirements in items A to F:

A. Repairs to underground storage tank systems must be properly conducted according to one of the following codes of practice developed by a nationally recognized association or independent testing laboratory:

(1) National Fire Protection Association 30, Flammable and Combustible Liquids Code;

(2) American Petroleum Institute 2200, Repairing Crude Oil, Liquefied Petroleum Gas and Product Pipelines;

(3) American Petroleum Institute 1631, Interior Lining of Underground Storage Tanks; or

(4) National Leak Prevention Association 631, Spill Prevention, Minimum 10-Year Life Extension of Existing Steel Underground Tanks by Lining Without the Addition of Cathodic Protection.

B. Repairs to fiberglass-reinforced plastic tanks must be made according to the codes of practice required in item A.

C. Metal pipe sections and fittings that have released product as a result of corrosion or other damage must

Approved by Revisor _____

be replaced. Fiberglass pipes and fittings must be repaired in accordance with the manufacturer's specifications.

D. Repaired tanks and piping must be tightness tested according to parts 7150.0330, item D; and 7150.0340, item B, within 30 days after the date of the completion of the repair except as provided in subitems (1) to (3):

(1) the repaired tank is internally inspected according to the codes of practice required in item A;

(2) the repaired part of the underground storage tank system is monitored monthly for releases according to a method specified in part 7150.0330, items E to I; or

(3) another test method is used that is determined by the commissioner to be no less protective of human health and the environment than the tests in subitems (1) and (2).

E. Within six months after the repair of a cathodically protected underground storage tank system, the cathodic protection system must be tested according to part 7150.0210, subparts 3 and 4, to ensure that it is operating properly.

F. Owners and operators must maintain records of each repair, and of a commissioner's determination under item D, subitem (3), for the remaining operating life of the underground storage tank system that demonstrate compliance with the requirements of this part.

7150.0240 REPORTING AND RECORDKEEPING.

Owners and operators of underground storage tank systems must cooperate fully with inspections, monitoring, and testing conducted by the agency, as well as requests for document submission, testing, and monitoring by the owner or operator under United States Code, title 42, section 6991d.

A. Owners and operators must submit the following information to the commissioner:

(1) notification of all underground storage tank systems under part 7150.0120, including certification of

Approved by Revisor _____

installation for new underground storage tank systems under part 7150.0100, subpart 8;

(2) notification of the discovery of an abandoned tank or of a change in the uses, contents, or ownership of a tank under Minnesota Statutes, section 116.48, subdivisions 2 and 3;

(3) reports of all releases under Minnesota Statutes, section 115.061, including suspected releases, spills and overfills, and confirmed releases;

(4) information generated in the course of taking corrective action as defined in Minnesota Statutes, section 115C.02, subdivision 4; and

(5) a notification before permanent closure or change in service under part 7150.0410.

B. Owners and operators must maintain the following information:

(1) a corrosion expert's analysis of site corrosion potential if corrosion protection equipment is not used under part 7150.0100, subparts 2, item D, and 4, item C;

(2) the commissioner's determination that alternative corrosion protection or spill and overfill equipment means may be used under part 7150.0100, subpart 2, item E; 4, item D; or 6, item B;

(3) documentation of operation of corrosion protection equipment under part 7150.0210, subpart 5;

(4) documentation of underground storage tank system repairs under part 7150.0230, item F;

(5) documentation of compliance with release detection requirements under part 7150.0350; and

(6) results of the site investigation conducted at permanent closure under part 7150.0440.

C. Owners and operators must keep the records required either:

(1) at the underground storage tank site where they are immediately available for inspection by the commissioner; or

Approved by Revisor _____

(2) at a readily available alternative site where they can be provided for inspection to the commissioner upon request.

In the case of permanent closure records required under part 7150.0440, owners and operators are also provided with the additional alternative of mailing closure records to the commissioner if they cannot be kept at the site or an alternative site as required in this item.

RELEASE DETECTION

7150.0300 GENERAL REQUIREMENTS FOR ALL UNDERGROUND STORAGE TANK SYSTEMS.

Subpart 1. **Methods.** Owners and operators of new and existing underground storage tank systems must provide a method, or combination of methods, of release detection that:

A. can detect a release from any part of the tank and the connected underground piping that routinely contains product;

B. is installed, calibrated, operated, and maintained according to the manufacturer's instructions, including routine maintenance and service checks for operability or running condition; and

C. meets the performance requirements in part 7150.0330 or 7150.0340, with any performance claims and their manner of determination described in writing by the equipment manufacturer or installer. In addition, all methods must be capable of detecting the leak rate or quantity specified for that method in part 7150.0330, items B to E; or 7150.0340, items A and B, with a probability of detection of 0.95 and a probability of false alarm of 0.05.

Subp. 2. **Release notification.** When a release detection method operated according to the performance standards in parts 7150.0330 and 7150.0340 indicates a release may have occurred, owners and operators must notify the agency according to Minnesota Statutes, section 115.061.

Subp. 3. **Release detection schedule.** Owners and operators

Approved by Revisor _____

of all underground storage tank systems must comply with the release detection requirements of parts 7150.0300 to 7150.0350 by December 22 of the year listed in the following table. Hazardous material tanks which are not regulated by Code of Federal Regulations, title 40, part 280, must comply with these requirements by the date indicated or by (insert date 180 days after date of adoption), whichever is later:

Schedule for Phase-in of Release Detection

Year System Was Installed	Year When Release Detection is Required (by December 22 of the year indicated)				
	1989	1990	1991	1992	1993
Before 1965 or date unknown	RD	P			
1965-1969		P/RD			
1970-1974		P	RD		
1975-1979		P		RD	
1980-1988		P			RD
New tanks (after December 22, 1988)	Immediately upon installation				

P=must begin release detection for all pressurized piping according to part 7150.0310.

RD=must begin release detection for tanks and suction piping according to parts 7150.0310, items A and B, subitem (2); and 7150.0320.

Subp. 4. **Closure.** Owners and operators of existing underground storage tank systems that cannot apply a method of release detection that complies with the requirements of parts 7150.0300 to 7150.0350 must complete the closure procedures in parts 7150.0400 to 7150.0440 by the date on which release detection is required for the underground storage tank system under subpart 3.

7150.0310 REQUIREMENTS FOR PETROLEUM UNDERGROUND STORAGE TANK SYSTEMS.

Owners and operators of petroleum underground storage tank systems must provide release detection for tanks and piping as required in items A and B.

A. Tanks must be monitored at least every 30 days for releases using one of the methods in part 7150.0330, items E to I, except that:

Approved by Revisor _____

(1) underground storage tank systems that meet the performance standards in part 7150.0100 or 7150.0110, and the monthly inventory control requirements in part 7150.0330, item A or B, may use tank tightness testing, conducted according to part 7150.0330, item D, at least every five years until December 22, 1998, or until ten years after the tank is installed or upgraded under part 7150.0110, item B, whichever is later;

(2) underground storage tank systems that do not meet the performance standards in part 7150.0100 or 7150.0110 may use monthly inventory controls conducted according to part 7150.0330, item A or B, and annual tank tightness testing conducted according to part 7150.0330, item D, until December 22, 1998, when the tank must be upgraded under part 7150.0110 or permanently closed under part 7150.0410; and

(3) tanks with capacities of 550 gallons or less may use weekly manual tank gauging conducted according to part 7150.0330, item B, as the sole method of release detection.

B. Underground piping that routinely contains regulated substances must be monitored for releases in a manner that meets one of the requirements in subitem (1) or (2).

(1) Underground piping that conveys regulated substances under pressure must:

(a) be equipped with an automatic line leak detector conducted according to part 7150.0340, item A; and

(b) have an annual line tightness test conducted according to part 7150.0340, item B, or have monthly monitoring conducted according to part 7150.0340, item C.

(2) Underground piping that conveys regulated substances under suction must either have a line tightness test conducted at least every three years and according to part 7150.0340, item B, or use a monthly monitoring method conducted according to part 7150.0340, item C. No release detection is required for suction piping that is designed and constructed to meet the following standards:

(a) the below-grade piping operates at less

Approved by Revisor _____

than atmospheric pressure;

(b) the below-grade piping is sloped so that the contents of the pipe will drain back into the storage tank if the suction is released;

(c) only one check valve is included in each suction line;

(d) the check valve is located directly below and as close as practical to the suction pump; and

(e) a method is provided that allows compliance with units (b) to (d) to be readily determined.

7150.0320 REQUIREMENTS FOR HAZARDOUS MATERIAL UNDERGROUND STORAGE TANK SYSTEMS.

Owners and operators of hazardous material underground storage tank systems must provide release detection that meets the requirements in items A and B.

A. Release detection at existing hazardous material underground storage tank systems must meet the requirements for petroleum underground storage tank systems in part 7150.0310 by the dates set forth in part 7150.0300. By December 22, 1998, all existing hazardous material underground storage tank systems must meet the release detection requirements for new systems in item B.

B. Release detection at new hazardous material underground storage tank systems must meet the requirements in subitems (1) to (5):

(1) Secondary containment systems must be designed, constructed, and installed to:

(a) contain regulated substances released from the tank system until they are detected and removed;

(b) prevent the release of regulated substances to the environment at any time during the operational life of the underground storage tank system; and

(c) be checked for evidence of a release at least every 30 days.

The provisions of part 7045.0528 may be used to comply with

Approved by Revisor _____

this subitem.

(2) Double-walled tanks must be designed, constructed, and installed to:

(a) contain a release from any part of the inner tank within the outer wall; and

(b) detect the failure of the inner wall.

(3) External liners, including vaults, must be designed, constructed, and installed to:

(a) contain 100 percent of the capacity of the largest tank within its boundary;

(b) prevent the interference of precipitation or groundwater intrusion with the ability to contain or detect a release of regulated substances; and

(c) surround the tank completely, for example, it is capable of preventing lateral as well as vertical migration of regulated substances.

(4) Underground piping must be equipped with secondary containment that satisfies the requirements of subitem (1), for example, trench liners and jacketing of double-walled pipe. In addition, underground piping that conveys regulated substances under pressure must be equipped with an automatic line leak detector according to part 7150.0340, item A.

(5) Other methods of release detection may be used if owners and operators:

(a) demonstrate to the commissioner that an alternate method can detect a release of the stored substance as effectively as any of the methods allowed in part 7150.0330, items B to I, can detect a release of petroleum;

(b) provide information to the commissioner on effective corrective action technologies, health risks, and chemical and physical properties of the stored substance, and the characteristics of the underground storage tank site; and

(c) obtain approval from the commissioner to use the alternate release detection method before the installation and operation of the new underground storage tank system.

Approved by Revisor _____

7150.0330 METHODS OF RELEASE DETECTION FOR TANKS.

Each method of release detection for tanks used to meet the requirements of part 7150.0310 must be conducted according to items A to I.

A. Product inventory control or another test of equivalent performance must be conducted monthly to detect a release of at least 1.0 percent flow-through plus 130 gallons on a monthly basis in the following manner:

(1) inventory volume measurements for regulated substance inputs, withdrawals, and the amount still remaining in the tank are recorded each operating day;

(2) the equipment used is capable of measuring the level of product over the full range of the tank's height to the nearest one-eighth of an inch;

(3) the regulated substance inputs are reconciled with delivery receipts by measurement of the tank inventory volume before and after delivery;

(4) deliveries are made through a drop tube that extends to within one foot of the tank bottom;

(5) product dispensing is metered and recorded within the local standards for meter calibration incorporated by reference at part 7600.6800; and

(6) the measurement of any water level in the bottom of the tank is made to the nearest one-eighth of an inch at least once a month.

Practices described in American Petroleum Institute 1621, Recommended Practice for Bulk Liquid Stock Control at Retail Outlets, may be used, where applicable, as guidance in meeting the requirements of this item.

B. Manual tank gauging may be used as described in this item to meet the requirements of part 7150.0310, item A.

(1) For tanks with capacities of 1,000 gallons or less, weekly manual tank gauging may be used as the sole method of release detection.

(2) For tanks with capacities of 1,001 to 2,000

Approved by Revisor _____

gallons, manual tank gauging may be used in place of product inventory control in item A.

For tanks not described in subitems (1) and (2), manual tank gauging may not be used to satisfy the provisions of part 7150.0310, item A.

C. Manual tank gauging must meet the following requirements:

(1) tank liquid level measurements are taken at the beginning and ending of a period of at least 36 hours during which no liquid is added to or removed from the tank;

(2) level measurements are based on an average of two consecutive stick readings at both the beginning and ending of the period; and

(3) the equipment used is capable of measuring the level of product over the full range of the tank's height to the nearest one-eighth of an inch.

A leak is suspected and subject to the requirements of Minnesota Statutes, section 115.061, if the variation between beginning and ending measurements exceeds the weekly or monthly standards in the following table:

Tank Capacity	Weekly Standard (one test)	Monthly Standard (four-test avg.)	Minimum Duration of Test
If manual tank gauging is the ONLY leak detection method used:			
up to 550 gallons	10 gallons	5 gallons	36 hours
551-1,000 gallons (when largest tank is 64" x 73")	9 gallons	4 gallons	44 hours
1,000 gallons (if tank is 48" x 128")	12 gallons	6 gallons	58 hours
If manual tank gauging is combined with Tank Tightness Testing:			
1,001-2,000 gallons	26 gallons	13 gallons	36 hours

D. Tank tightness testing or another test of equivalent performance must be capable of detecting a 0.1 gallon per hour leak rate from any part of the tank that routinely contains product while accounting for the effects of thermal expansion or contraction of the product, vapor pockets, tank

Approved by Revisor _____

deformation, evaporation or condensation, and the location of the water table.

E. Equipment for automatic tank gauging that tests for the loss of product and conducts inventory control must meet the following requirements:

(1) the automatic product level monitor test can detect a 0.2 gallon per hour leak rate from any part of the tank that routinely contains product; and

(2) inventory control or another test of equivalent performance is conducted according to the requirements of item A.

F. Testing or monitoring for vapors within the soil gas of the excavation zone must meet the following requirements:

(1) the materials used as backfill are sufficiently porous such as gravel, sand, or crushed rock, to readily allow diffusion of vapors from releases into the excavation area;

(2) the stored regulated substance, or a tracer compound placed in the tank system, is sufficiently volatile, such as gasoline, to result in a vapor level that is detectable by the monitoring devices located in the excavation zone in the event of a release from the tank;

(3) the measurement of vapors by the monitoring device is not rendered inoperative by the groundwater, rainfall, or soil moisture or other known interferences so that a release could go undetected for more than 30 days;

(4) the level of background contamination in the excavation zone will not interfere with the method used to detect releases from the tank;

(5) the vapor monitoring points are designed and operated to detect any significant increase in concentration above background of the regulated substance stored in the tank system, a component or components of that substance, or a tracer compound placed in the tank system;

(6) in the underground storage tank excavation zone, the site is assessed to ensure compliance with the

Approved by Revisor _____

requirements in subitems (1) to (4) and to establish the number and positioning of vapor monitoring points that will detect releases within the excavation zone from any part of the tank that routinely contains product; and

(7) vapor monitoring points are clearly marked and secured to avoid unauthorized access and tampering.

G. Testing or monitoring for liquids in the groundwater must meet the provisions of chapter 4725, as well as the following requirements:

(1) the regulated substance stored is immiscible in water and has a specific gravity of less than one;

(2) groundwater is never more than 20 feet from the ground surface and the hydraulic conductivity of the soil between the underground storage tank system and the monitoring wells or devices is not less than 0.01 centimeters per second, for example, the soil should consist of gravels, coarse to medium sands, coarse silts, or other permeable materials;

(3) the slotted part of the monitoring well casing must be designed to prevent migration of natural soils or filter pack into the well and to allow entry of regulated substance on the water table into the well under both high and low groundwater conditions;

(4) monitoring wells are sealed from the ground surface to the top of the filter pack;

(5) monitoring wells or devices intercept the excavation zone or are as close to it as is technically feasible;

(6) the continuous monitoring devices or manual methods used can detect the presence of at least one-eighth of an inch of free product on top of the groundwater in the monitoring wells;

(7) within and immediately below the underground storage tank system excavation zone, the site is assessed to ensure compliance with the requirements in subitems (1) to (5), and to establish the number and positioning of monitoring wells or devices that will detect releases from any part of the tank

Approved by Revisor _____

that routinely contains product; and

(8) monitoring wells are clearly marked and secured to avoid unauthorized access and tampering.

H. Interstitial monitoring between the underground storage tank system and a secondary barrier immediately around or beneath it may be used, but only if the system is designed, constructed, and installed to detect a leak from any part of the tank that routinely contains product and also meets one of the requirements of subitems (1) to (3).

(1) For double-walled underground storage tank systems, the sampling or testing method can detect a release through the inner wall in any part of the tank that routinely contains product. The provisions outlined in the Steel Tank Institute's Standard for Dual Wall Underground Storage Tanks may be used as guidance for aspects of the design and construction of underground steel double-walled tanks.

(2) For underground storage tank systems with a secondary barrier within the excavation zone, the sampling or testing method used can detect a release between the underground storage tank system and the secondary barrier according to the following requirements:

(a) the secondary barrier around or beneath the underground storage tank system consists of artificially constructed material that is sufficiently thick and impermeable, being at least 10^{-6} centimeters per second for the regulated substance stored, to direct a release to the monitoring point and permit its detection;

(b) the barrier is compatible with the regulated substance stored so that a release from the underground storage tank system will not cause a deterioration of the barrier allowing a release to pass through undetected;

(c) for cathodically protected tanks, the secondary barrier must be installed so that it does not interfere with the proper operation of the cathodic protection system;

(d) the groundwater, soil moisture, or

Approved by Revisor _____

rainfall will not render the testing or sampling method used inoperative so that a release could go undetected for more than 30 days;

(e) the site is assessed to ensure that the secondary barrier is always above the groundwater and not in a 25-year flood plain, unless the barrier and monitoring designs are for use under such conditions; and

(f) monitoring wells and vapor monitoring points are clearly marked and secured to avoid unauthorized access and tampering.

(3) For tanks with an internally fitted liner, an automated device can detect a release between the inner wall of the tank and the liner, and the liner is compatible with the substance stored.

I. Any other type of release detection method, or combination of methods, can be used if:

(1) it can detect a 0.2 gallon per hour leak rate or a release of 150 gallons within a month with a probability of detection of 0.95 and a probability of false alarm of 0.05; and

(2) the owner and operator can demonstrate to the commissioner that the method can detect a release as effectively as any of the methods allowed in items D to H and obtain the commissioner's prior approval of the method. In comparing methods, the commissioner shall consider the size of release that the method can detect and the frequency and reliability with which it can be detected. If the method is approved by the commissioner, the owner and operator must comply with any conditions imposed by the commissioner on its use to ensure the protection of human health and the environment.

7150.0340 METHODS OF RELEASE DETECTION FOR PIPING.

Each method of release detection for piping used to meet the requirements of part 7150.0300 must be conducted according to items A to C.

A. Methods which alert the operator to the presence of a leak by restricting or shutting off the flow of regulated

Approved by Revisor _____

substances through piping or triggering an audible or visual alarm may be used only if they detect leaks of three gallons per hour at ten pounds per square inch line pressure within one hour. An annual test of the operation of the leak detector must be conducted according to the manufacturer's requirements.

B. A periodic test of piping may be conducted only if it can detect a 0.1 gallon per hour leak rate at one and one-half times the operating pressure.

C. Any of the methods in part 7150.0330, items F to I, may be used if they are designed to detect a release from any part of the underground piping that routinely contains regulated substances.

7150.0350 RELEASE DETECTION RECORDKEEPING.

Owners and operators shall maintain records according to part 7150.0240 demonstrating compliance with applicable requirements of parts 7150.0300 to 7150.0350. These records must include the requirements of items A to C.

A. All written performance claims pertaining to any release detection system used, and the manner in which these claims have been justified or tested by the equipment manufacturer or installer, must be maintained for as long as the system is being used to comply with the requirements of this chapter.

B. The results of any sampling, testing, or monitoring must be maintained for at least ten years.

C. Written documentation of all calibration, maintenance, and repair of release detection equipment permanently located on-site must be maintained for at least ten years after the servicing work is completed. Any schedules of required calibration and maintenance provided by the release detection equipment manufacturer must be retained as long as the system is being used to comply with the requirements of this chapter.

D. Documentation of the commissioner's approval of alternate release detection methods under part 7150.0330, item

Approved by Revisor _____

I, must be maintained for as long as the methods are being used to comply with the requirements of this chapter.

OUT-OF-SERVICE UNDERGROUND STORAGE TANK SYSTEMS AND CLOSURE

7150.0400 TEMPORARY CLOSURE.

Subpart 1. **Requirements.** In addition to the requirements of chapter 7510, the Minnesota Uniform Fire Code, owners and operators must comply with the provisions in subparts 2 to 4 relating to temporary closure.

Subp. 2. **Operation and maintenance during temporary closure.** When an underground storage tank system is temporarily closed, owners and operators must continue operation and maintenance of corrosion protection according to part 7150.0210, and any release detection according to parts 7150.0300 to 7150.0350. Release detection is not required as long as the underground storage tank system is empty. The underground storage tank system is empty when all materials have been removed using commonly employed practices so that no more than 2.5 centimeters, or one inch, of residue, or 0.3 percent by weight of the total capacity of the underground storage tank system, remain in the system.

Subp. 3. **Tanks out of service 90 days.** When an underground storage tank system is temporarily closed for 90 days or more, owners and operators must also comply with the following requirements:

A. leave vent lines open and functioning; and

B. cap and secure all other lines, pumps, passageways, and appurtenances.

Subp. 4. **Tanks out of service one year.** When an underground storage tank system is temporarily closed for more than 12 months, owners and operators must permanently close the underground storage tank system if it does not meet either performance standards in part 7150.0100 for new underground storage tank systems or the upgrading requirements in part 7150.0110, except that the spill and overfill equipment requirements do not have to be met. Owners and operators must

Approved by Revisor _____

permanently close the substandard underground storage tank systems at the end of this 12-month period according to parts 7150.0410 to 7150.0440, unless the commissioner provides an extension of the 12-month temporary closure period. Owners and operators must complete a site assessment according to part 7150.0420 before such an extension can be applied for.

7150.0410 PERMANENT CLOSURE AND CHANGES-IN-SERVICE TO STORAGE OF NONREGULATED SUBSTANCES.

Subpart 1. **Requirements.** In addition to the requirements of chapter 7510, the Minnesota Uniform Fire Code, owners and operators must comply with the provisions in subparts 2 to 7 relating to permanent closure and changes-in-service.

Subp. 2. **Notice of closure or change in service.** At least ten days before beginning either permanent closure or a change-in-service under subparts 3 and 4, owners and operators must notify the commissioner of their intent to permanently close or make the change-in-service, unless such action is in response to corrective action. The required assessment of the excavation zone under part 7150.0420 must be performed after notifying the commissioner but before completion of the permanent closure or a change-in-service.

Subp. 3. **Permanent closure.** To permanently close a tank, owners and operators must empty and clean it by removing all liquids and accumulated sludges. All tanks taken out of service permanently must also be either removed from the ground or filled in with an inert solid material.

Subp. 4. **Storage of nonregulated substances.** Continued use of an underground storage tank system to store a nonregulated substance is considered a change in service. Before a change in service to storage of a nonregulated substance, owners and operators must empty and clean the tank by removing all liquid and accumulated sludge and conduct a site assessment according to part 7150.0420.

Subp. 5. **Certified removers.** Owners and operators must ensure that persons performing permanent closures under subpart

Approved by Revisor _____

3 or changes-in-service under subpart 4 are in compliance with certification requirements imposed by chapter 7105. Certified removers must furnish copies of current certificates issued by the agency to the owner and operator before beginning a permanent closure under subpart 3 or a change-in-service under subpart 4.

Subp. 6. **Tank system closure certification.** Owners and operators must ensure that the person who removes or otherwise closes an underground storage tank system certifies in the notification form that the methods used to remove or otherwise close the tanks and piping comply with part 7150.0410, subparts 3 to 5.

Subp. 7. **Cleaning and closure procedures.** The cleaning and closure procedures listed in one of the following documents must be used as guidance for complying with this part:

A. American Petroleum Institute 1604, Removal and Disposal of Used Underground Petroleum Storage Tanks;

B. American Petroleum Institute 1631, Interior Lining of Underground Storage Tanks; or

C. American Petroleum Institute 2015, Cleaning Petroleum Storage Tanks.

7150.0420 ASSESSING THE SITE AT CLOSURE OR CHANGE IN SERVICE.

When removing or closing a tank or making a change in service to storage of a nonregulated substance, owners and operators must measure through laboratory analysis for the presence of a release where contamination is most likely to be present at the underground storage tank site. If contaminated soils, contaminated groundwater, or free product as a liquid or vapor is discovered by this measurement or by any other manner, owners and operators must notify the agency immediately and begin corrective action according to Minnesota Statutes, section 115.061. In selecting sample types, sample locations, and measurement methods, owners and operators must consider the method of closure, the nature of the stored substance, the type of backfill, the depth to groundwater, and other factors

Approved by Revisor _____

appropriate for identifying the presence of a release. The requirements of this part are satisfied if one of the external release detection methods allowed in part 7150.0330, items F and G, is operating according to the requirements of part 7150.0330 at the time of removal, closure, or making a change in service to storage of a nonregulated substance, and indicates no release has occurred.

7150.0430 APPLICABILITY TO PREVIOUSLY CLOSED UNDERGROUND STORAGE TANK SYSTEMS.

When directed by the commissioner, the owner and operator of an underground storage tank system permanently closed before December 22, 1988, must assess the excavation zone and close the underground storage tank system according to parts 7150.0400 to 7150.0440 if releases from the underground storage tank may, in the judgment of the commissioner, pose a current or potential threat to human health and the environment.

7150.0440 CLOSURE RECORDS.

Owners and operators must maintain records according to part 7150.0240 that are capable of demonstrating compliance with closure requirements under parts 7150.0400 to 7150.0440. The results of the excavation zone assessment required in part 7150.0420 must be maintained for at least three years after completion of permanent closure or change in service in one of the following ways:

A. by the owners and operators who took the underground storage tank system out of service;

B. by the current owners and operators of the underground storage tank system site; or

C. by mailing these records to the commissioner if they cannot be maintained at the closed facility.

7150.0500 INCORPORATION BY REFERENCE.

Subpart 1. Scope. For purposes of chapter 7150, the documents in subpart 2 are incorporated by reference. They can be found at the Minnesota State Law Library, Ford Building, 117

Approved
by Revisor _____

University Avenue, Saint Paul, Minnesota 55155 or at the addresses indicated. If any of the documents are amended, and if the amendments are incorporated by reference or otherwise made a part of federal technical rules at Code of Federal Regulations, title 40, part 280, then the amendments to documents are also incorporated by reference in this chapter.

Subp. 2. **Referenced standards.** The documents incorporated by reference in this chapter are listed in items A to K:

A. American Societies of Mechanical Engineers, 345 East 47th Street, New York, New York 10017.

(1) B31.3, Chemical Plant and Petroleum Refinery Piping (1987); and

(2) B31.4, Liquid Transportation Systems for Hydrocarbons, Liquid Petroleum Gas, Anhydrous Ammonia and Alcohols (1986).

B. American Petroleum Institute, 1220 L Street Northwest, Washington, D.C. 20005.

(1) 1604, Removal and Disposal of Used Underground Petroleum Storage Tanks (1987);

(2) 1615, Installation of Underground Petroleum Storage Systems (1987);

(3) 1621, Bulk Liquid Stock Control at Retail Outlets (1987);

(4) 1626, Storing and Handling Ethanol and Gasoline-Ethanol Blends at Distribution Terminals and Service Stations (1985);

(5) 1627, Storing and Handling of Gasoline-Methanol/Cosolvent Blends at Distribution Terminals and Service Stations (1986);

(6) 1631, Interior Lining of Underground Storage Tanks (1987);

(7) 1632, Cathodic Protection of Underground Petroleum Storage Tanks and Piping Systems (1987);

(8) 2015, Cleaning Petroleum Storage Tanks (1985); and

(9) 2200, Repairing Crude Oil, Liquefied

Approved by Revisor _____

Petroleum Gas and Product Pipelines (1983).

C. American Society of Testing and Materials, 1916 Race Street, Philadelphia, Pennsylvania 19103.

D4021-86, Standard Specification for Glass-Fiber-Reinforced Polyester Underground Petroleum Storage Tanks (1986).

D. Association of Composite Tanks, 108 North State Street, Suite 720, Chicago, Illinois 60602.

ACT-100, Specification for the Fabrication of FRP Clad/Composite Underground Storage Tanks (1989).

E. National Association of Corrosion Engineers, Publications Department, P.O. Box 218340, Houston, Texas 77218.

(1) RP-01-69, Control of External Corrosion on Underground or Submerged Metallic Piping Systems (1983); and

(2) RP-02-85, Control of External Corrosion on Metallic Buried, Partially Buried, or Submerged Liquid Storage Systems (1985).

F. National Fire Protection Association, Batterymarch Park, Quincy, Massachusetts 02269.

(1) 30, Flammable and Combustible Liquids Code (1987); and

(2) 385, Standard for Tank Vehicle for Flammable and Combustible Liquids (1985).

G. National Leak Prevention Association, 4090 Rosehill Avenue, Cincinnati, Ohio 45229.

631, Spill Prevention, Minimum 10-Year Life Extension of Existing Steel Underground Tanks by Lining Without the Addition of Cathodic Protection (1988).

H. Petroleum Equipment Institute, P.O. Box 2380, Tulsa, Oklahoma 74101.

RP100, Recommended Practices for Installation of Underground Liquid Storage Systems (1990).

I. Steel Tank Institute, 728 Anthony Trail, Northbrook, Illinois 60062.

(1) Specifications for STI-P_3 System of External Corrosion Protection of Underground Steel Storage Tanks (1987);

Approved by Revisor _____

(2) Steel Tank Institute Standard for Dual Wall Underground Steel Storage Tanks (undated); and

(3) STI F894-89, Steel Tank Institute Specification for External Corrosion Protection of FRP Composite Steel Underground Storage Tanks (1989).

J. Underwriters Laboratories Inc., 333 Pfingsten Road, Northbrook, Illinois 60062.

(1) UL 58, Steel Underground Tanks for Flammable and Combustible Liquids (1986);

(2) UL 567, Pipe Connectors for Flammable and Combustible Liquids and LP-Gas (1989);

(3) UL 1316, Glass-Fiber-Reinforced Plastic Underground Storage Tanks for Petroleum Products (1983); and

(4) UL 1746, Corrosion Protection Systems for Underground Storage Tanks (1989).

K. Underwriters Laboratories of Canada, 7 Crouse Road, Scarborough, Ontario, Canada M1R 3A9.

(1) CAN4-S603.1-M85, Standard for Galvanic Corrosion Protection Systems for Steel Underground Tanks for Flammable and Combustible Liquids (1985);

(2) CAN4-S603-M85, Standard for Steel Underground Tanks for Flammable and Combustible Liquids (1985);

(3) CAN4-S615-M83, Standard for Reinforced Plastic Underground Tanks for Petroleum Products (1983);

(4) CAN4-S631-M84, Standard for Isolating Bushings for Steel Underground Tanks Protected with Coatings and Galvanic Systems (1984);

(5) CAN4-S633-M84, Flexible Underground Hose Connectors for Flammable and Combustible Liquids (1984); and

(6) ULC Subject C107C-M1984, Guide for Glass Fibre Reinforced Plastic Pipe and Fittings for Flammable Liquids (1984).

Approved by Revisor _____

federal register

Friday
April 17, 1987

Part II

Environmental Protection Agency

40 CFR Parts 280 and 281
Underground Storage Tanks; Proposed Rules

ENVIRONMENTAL PROTECTION AGENCY

40 CFR Part 280

[FRL-3154-6]

Underground Storage Tanks; Technical Requirements

AGENCY: Environmental Protection Agency.

ACTION: Proposed rule.

SUMMARY: The Environmental Protection Agency (EPA) today proposes regulations for underground storage tanks containing petroleum or substances defined as hazardous under the Comprehensive Environmental Response, Compensation, and Liability Act (CERCLA) of 1980, as amended (except hazardous wastes regulated under Subtitle C of the Resource Conservation and Recovery Act).

Under Subtitle I, Section 9003 of the Resource Conservation and Recovery Act, as amended (RCRA), EPA must establish requirements for leak detection, leak prevention, financial responsibility and corrective action for all underground storage tanks containing regulated substances. Today's proposal sets forth, and solicits comment on, proposed requirements that would satisfy the mandates of Section 9003.

DATES: Comments must be received on or before June 16, 1987. Public hearings will be held on this rulemaking in conjunction with public hearings on the proposed UST State Program Approval Requirements, published elsewhere in today's **Federal Register**. Public hearings will be held from 9:30 A.M. to 5:00 P.M., unless concluded earlier, and will be carried over to a second day if necessary to allow commenters to speak who have requested to testify. These hearings are scheduled as follows:

1. May 28, 1987, 9:30 A.M. to 5:00 P.M., Washington, DC.
2. June 1, 1987, 9:30 A.M. to 5:00 P.M., Dallas, Texas.
3. June 4, 1987, 9:30 A.M. to 5:00 P.M., San Francisco, California.

Requests to present oral testimony must be submitted in writing and received at least one week prior to the scheduled hearing date.

ADDRESSES: Send comments to Docket Clerk, Office of Underground Storage Tanks (WH-562A), Docket No. UST 2-1, U.S. Environmental Protection Agency, 401 M Street SW., Washington, DC 20460.

Requests to testify at a hearing may be mailed to: Gerri Wyer, Hearings Coordinator, Office of Underground Storage Tanks (WH-562A), U.S. Environmental Protection Agency, 401 M Street SW., Washington, DC 20460, (800) 424-9346 (toll free) or (202) 382-3000 in Washington, DC.

Hearings will be held at the following locations:

1. Washington, DC—The Westin Hotel, 2401 M Street NW., Washington, DC 20037
2. Dallas—The Registry Hotel, 15201 Dallas Parkway, Dallas, Texas 75248
3. San Francisco—The Miyako Hotel, 1625 Post Street, San Francisco, California 94015.

FOR FURTHER INFORMATION CONTACT: RCRA/SUPERFUND Hotline, 1-(800) 424-9346; or in Washington, DC, 2-(202) 382-3000.

SUPPLEMENTARY INFORMATION: The contents of today's Preamble are listed in the following outline:

I. Authority
II. Background
  A. The Law: Subtitle I of RCRA
  B. Description of the Underground Storage Tanks (UST Systems) to be Regulated
    1. Number of Tanks and Facilities
    2. Types of Tanks
    3. Age of Tanks
  C. General Status of Existing Industry, State and Local Practices
III. The Scope and Nature of the Problem
  A. Current Estimates of Leaking UST Systems
    1. EPA Studies
    2. Some Local Government Experiences
    3. Industry Estimates
    4. The Nature and Extent of the Problem
  B. Major Causes of Releases
    1. Corrosion
    2. Installation Failure
    3. Piping Failure
    4. Spills/Overfills
  C. Technical Options Available to Address Causes of Releases
    1. Corrosion Protection
    2. Design and Construction Standards
    3. Spill and Overfill Equipment and Practices
    4. Inspections
    5. Operation and Maintenance
    6. Release Detection Requirements
IV. Important Influences on Today's Proposal
  A. Recommended Industry Practices and National Consensus Codes
  B. Current Status and Future Role of State and Local UST System Programs
  C. Major Trends in the Industry
  D. Small Business Impacts
V. Today's Proposal
  A. Summary of Today's Proposal
  B. Considerations Underlying EPA's Proposed Approach
  C. Options Considered for New and Existing UST Systems
    1. New Petroleum UST Systems
    2. Existing Petroleum UST Systems
    3. New and Existing Hazardous Substance UST Systems
  D. Options Considered for Corrective Actions
    1. Petroleum UST Systems
    2. Hazardous Substances UST Systems
  E. Two-Tiered Regulatory Scheme for Petroleum Tanks; Basis for Determining Class
VI. Analysis of Today's Proposed Rule
  A. Program Scope
    1. Applicability
    2. Exclusion for Tanks Regulated Under Subtitle C
    3. Deferral of Regulation
    4. Definitions
  B. Design, Installation, and Notification Requirements
    1. Performance Standards for New UST Systems
    2. Implementation Schedules for Upgrading of Existing UST Systems
    3. Notification Requirements
  C. General Operating Requirements
    1. Spill and Overfill Controls
    2. Operation and Maintenance of Corrosion Protection
    3. Compatibility
    4. Repairs
    5. Recordkeeping
  D. Release Detection
    1. General Strategy
    2. General Requirements for All UST Systems
    3. Requirements for New UST Systems
    4. Secondary Containment for New Hazardous Substance UST Systems
    5. Additional Requirements for Piping at New UST Systems
    6. Requirements for Existing UST Systems
    7. Release Detection Recordkeeping
  E. Release Reporting and Investigation
  F. Corrective Action Requirements for Petroleum UST Systems
    1. Stage I: Immediate Corrective Action Steps
    2. Stage II: Longer-Term Corrective Action
    3. Responsibilities of Implementing Agencies
    4. Enforcement
  G. Corrective Action Requirements for Hazardous Substance UST Systems
    1. Stage I: Immediate Corrective Action Steps
    2. Stage II: Longer-Term Corrective Action
    3. Responsibilities of Implementing Agencies
    4. Enforcement
  H. Out-Of-Service UST Systems and Closure
VII. Relationship to Other Aspects of the UST System Program
  A. Interim Prohibition
  B. Notification
  C. Leaking Underground Storage Tank Trust Fund
  D. Exempted Tank Studies
VIII. Relationship to Other Agency Programs
  A. CERCLA
  B. Hazardous Waste Tank Program
  C. Used Oil Regulations
  D. Stage II Vapor Recovery Program
  E. SPCC
  F. DOE High-Level Radioactive Waste Program
IX. Economic and Regulatory Impacts
  A. Regulatory Impact Analysis

B. Regulatory Flexibility Act
C. Paperwork Reduction Act
X. Review of Supporting Documents and Request for Public Comment
XI. Schedule of Public Hearings
XII. List of Subjects in 40 CFR Part 280

I. Authority

These regulations are issued under the authority of Sections 2002, 9001, 9002, 9003, 9004, 9005, 9006, 9007, and 9009 of the Solid Waste Disposal Act of 1970, as amended by the Resource Conservation and Recovery Act of 1976, as amended (42 U.S.C. 6912, 6991(a), 6991(b), 6991(c), 6991(d), 6991(e), 6991(f), 6991(g), 6991(h)).

II. BACKGROUND

A. The Law: Subtitle I of RCRA

The Hazardous and Solid Waste Amendments of 1984, Public Law 98-616, were signed by the President on November 8, 1984. These Amendments extend and strengthen the provisions of the Solid Waste Disposal Act as amended by the Resource Conservation and Recovery Act (RCRA) of 1976. One major portion of this new legislation, Subtitle I, provides for the development and implementation of a comprehensive regulatory program for "underground storage tanks."

Subtitle I defines "underground storage tank" as "any one or combination of tanks (including underground pipes connected thereto) which is used to contain an accumulation of regulated substances, and the volume of which (including the volume of the underground pipes connected thereto) is 10 percent or more beneath the surface of the ground." Throughout this Preamble and proposed rule the use of the term "underground storage tanks," "USTs," and "UST systems" are meant to include both the underground storage tank vessel and the underground piping connected to it. The use of the word "tank" pertains to only the storage tank vessel itself. "Regulated substances" are defined as either petroleum or substances defined as hazardous under the Comprehensive Environmental Response, Compensation, and Liability Act of 1980, as amended (CERCLA) (except hazardous wastes regulated under Subtitle C of RCRA).

Subtitle I excludes the following from the definition of underground storage tanks:

- Farm or residential tanks of 1,100 gallons or less capacity used for storing motor fuel for noncommercial purposes;
- Tanks used for storing heating oil for consumptive use on the premises where stored;
- Septic tanks;
- Pipeline facilities (including gathering lines) regulated under (a) the Natural Gas Pipeline Safety Act of 1968; (b) the Hazardous Liquid Pipeline Act of 1979; or (c) which are interstate pipeline facilities regulated under state laws comparable to the provisions of the laws referred to in (a) and (b) above;
- Surface impoundments, pits, ponds, or lagoons;
- Storm water or wastewater collection systems;
- Flow-through process tanks;
- Liquid traps or associated gathering lines directly related to oil or gas production and gathering operations; and
- Storage tanks situated in an underground area (such as a basement, cellar, mineworking, drift, shaft, or tunnel) if the tank is situated upon or above the surface of the floor.

Subtitle I contains several major provisions for the regulation of UST systems. Section 9002 requires UST system owners to notify states of the existence of their UST systems. These notification requirements were addressed in a Final Rule published by EPA (50 FR 46602, November 8, 1985). Section 9002, as amended by the Superfund Amendments and Reauthorization Act of 1986 (SARA), also requires that states use the notifications they receive to compile tank inventories. Also, under federal grant agreements states are providing EPA with aggregated data from these notifications.

Under Section 9003 of Subtitle I, EPA must promulgate regulations applicable to all owners and operators of UST systems to protect human health and the environment. This section requires that EPA issue design, construction, installation, and compatibility standards for new tanks as well as requirements applicable to all tank owners and operators concerning leak detection, recordkeeping, reporting, closure, corrective action, and financial responsibility.

Section 9003(h) was recently added by the Superfund Amendments and Reauthorization Act of 1986 (SARA). This provision gives EPA (and states under cooperative agreements with EPA) authority to clean up releases from UST systems or to require their owners and operators to do so. It also establishes a trust fund to finance some of these activities.

Section 9004 permits EPA to authorize states to implement their own UST programs in lieu of the federal program if their requirements are "no less stringent" than EPA's and provide for adequate enforcement.

Other provisions of Subtitle I pertain to definitions (Section 9001); entry, inspection, and information-gathering (Section 9005); enforcement (Section 9006); federal facilities (Section 9007); state authorities (Section 9008); and studies and reports to Congress required of EPA (Section 9009).

This Preamble and proposed rule pertain to the requirements mandated by Sections 9003(a) and (c)-(e). Proposed financial responsibility requirements under Section 9003(a) and (d) and state program approval requirements under Section 9004 are proposed in other parts of today's **Federal Register**.

Section 9003(c) requires that EPA establish minimum requirements for all UST systems: to maintain a leak detection system or comparable system designed to identify releases to protect human health and the environment; to maintain records of any such release detection system; to report releases and corrective action taken; to take corrective action in response to a release; and to close tanks to prevent future releases. Under Section 9003(e), EPA must also establish performance standards for new UST systems. At a minimum, these standards must include design, construction, installation, release detection, and compatibility standards.

Until UST system regulations for new tanks are promulgated, Section 9003(g) establishes an "Interim Prohibition" that allows installation of UST systems after May 8, 1985 only if the UST system 1) will prevent releases due to corrosion or structural failure for the operational life of the UST, 2) is cathodically protected against corrosion, constructed of noncorrodible material, or otherwise designed to prevent releases, and 3) is compatible with the substance to be stored. The law allows an exemption from the requirement of corrosion protection if an UST system is located at a site that has a soil resistivity measured at 12,000 ohms/cm or greater. These requirements will be replaced when final new tank standards under Section 9003(e) become effective. An interpretive rule concerning the Interim Prohibition was published on June 4, 1986 (51 FR 20418).

This Preamble will describe in detail the full range of requirements mandated by Sections 9003(a), (c)(1)-(5), and (e). A description of the UST system universe to be regulated by these requirements follows.

B. Description of the Underground Storage Tanks (UST Systems) To Be Regulated

1. Number of Tanks and Facilities

Today's proposed regulation will apply to an estimated 1.4 million UST systems owned or operated at over 500,000 facilities. EPA estimates that over 95 percent of the estimated 1.4 million UST systems are used to store petroleum. Among these petroleum UST systems, there is a fairly even split between the retail motor fuel sales industry (676,000 tanks) and a number of other industries primarily storing petroleum products for their own use (651,000 tanks). EPA estimates that about 4 percent of the total number of UST systems affected by this proposal contain hazardous substances (54,000 tanks).

The following table displays the number of tanks and facilities appearing in various industry sectors.

TABLE 1

Industry sector	Number of UST systems	Number of facilities
RETAIL MOTOR FUELS	(676,000)	(193,000)
Refiners	164,000	47,000
Jobbers	161,000	46,000
Convenience Stores	32,000	15,000
Independent Chains	18,000	5,000
Open Dealers	281,000	80,000
PETROLEUM STORAGE	(651,000)	(298,000)
Agriculture	86,000	54,000
Mining	14,000	6,000
Construction	42,000	21,000
Manufacturing	75,000	30,000
Transportation	58,000	25,000
Communications & Utilities	39,000	19,000
Wholesale & Retail Trade	136,000	65,000
Services	54,000	26,000
Government (Military)	49,000	6,000
(Non-Military)	98,000	46,000
CHEMICAL STORAGE	(54,000)	(21,000)
Manufacturing	27,000	8,000
Wholesale & Retail Trade	14,000	6,000
Services	3,000	1,500
Other Private Sectors	6,000	3,000
Federal Government	2,000	500
State & Local Government	2,000	2,000
Totals	[1] 1,381,000	[1] 512,000

[1] These estimates do not include potentially millions of unusual or small UST systems discussed in Section VI.A. of this Preamble. For example, there are approximately 750,000 hydraulic lift fluid USTs.

2. Types of UST Systems

UST systems generally consist of the following:

- Steel UST systems not protected from corrosion ("bare steel tanks");
- Steel UST systems protected with a noncorrodible coating;
- Steel UST systems with cathodic protection;
- Steel UST systems with a noncorrodible coating and cathodic protection;
- UST systems made totally of noncorrodible materials; and
- UST systems, made of noncorrodible materials or protected steel, using secondary containment systems.

Steel UST systems can be protected against corrosion by applying a coating of noncorrodible material, such as fiberglass-reinforced plastic or coal tar epoxy, or by using cathodic protection (described below in Section III.C.1.). Tanks constructed of noncorrodible materials are usually made of fiberglass-reinforced plastic (FRP). Secondary containment systems are designed to restrict leaks temporarily to a containment area where they can be rapidly detected by leak detection monitors. There are three main types of secondary containment: double-walled tanks, pit lining systems, and vaults.

Of the estimated 1.4 million existing UST systems, approximately 80 percent are believed to be constructed of unprotected steel. As a result of the Interim Prohibition and installation trends in the petroleum industry, however, the number of bare steel UST systems being installed today has significantly declined. For example, the Steel Tank Institute recently reported a dramatic rise in the production and sale of coated and cathodically-protected steel tanks in the United States. They indicate that the cumulative number of STIP[3] tanks installed nationwide since the late 1960s was doubled in one year (1986) from approximately 35,000 to over 70,000 tanks. STI members further estimate that in 1987 approximately 90 percent of the steel tanks they produce will be coated and cathodically protected. (Some manufacturers are now refusing to sell bare steel tanks.) Preliminary data from several state UST programs (for example, Florida, New York, California, Kansas and North Carolina) corroborate this trend away from bare steel tanks. New tanks are reported most commonly to be made out of coated and cathodically-protected steel, and fiberglass reinforced plastic (FRP), and FRP-clad steel.

3. Age of Tanks

Most existing UST systems have already been in the ground for more than ten years. A recent EPA study, *Underground Motor Fuel Storage Tanks: A National Survey*, found that approximately one third of the existing motor fuel storage tanks are over 20 years old or of unknown age. The survey reported a mean tank age of 12 years for large facilities and 14 years for smaller facilities.

C. General Status of Existing Industry, State, and Local Practices

A number of states and localities have adopted requirements applicable to UST systems. These requirements are diverse and vary widely in stringency. Because leaking petroleum UST systems have led to fires and explosions, early state and local UST regulations have focused on fire code authorities, primarily emphasizing concerns with immediate public safety. National consensus codes, such as the National Fire Prevention Association's NFPA 30 and 329, have been adopted by many state and local governments.

At least fourteen states have recently addressed the ground-water contamination and cleanup problems posed by leaking UST systems through comprehensive regulatory programs that attempt to control important aspects of proper UST system management. Several states, like California, New York and Florida, have established specific UST system regulations that include standards for new UST system design, construction and installation; closure, retrofitting, or repair of existing UST systems; release detection; and corrective action requirements.

Numerous non-regulatory initiatives in UST system management include existing recommended industry practices and state-of-the-art professional guidances. For example, the American Petroleum Institute, the Steel Tank Institute, Underwriters Laboratories, the National Association of Corrosion Engineers, and the American Society for Testing and Materials continue to provide benchmark standards for design and materials. Steel and fiberglass tank manufacturers also supply specifications for tank installation and maintenance.

It appears that the Interim Prohibition of Section 9003(g) reinforces current industry and regulatory trends. As previously mentioned, estimates provided to EPA from several representatives of tank manufacturers

and state agencies indicate a sharply increasing trend towards corrosion-protected underground tank systems. The American Petroleum Institute conducted a survey of its membership and reported in December 1984 that 83 percent of the major and semi-major oil companies (which include a total of approximately 175,000 UST systems) have formal plans for scheduling tank replacements and upgrading. Most of these companies are installing single-walled FRP tanks.

Despite these positive trends, however, many other sectors of the retail motor fuel sales industry (e.g., many independent retail marketers) currently appear to have no clear plans to upgrade or replace their aging, corrosion-prone UST systems. The non-retail petroleum and hazardous substance tank sectors also appear to display a wide variety of responses to upgrading and replacement of tank systems. Also, most existing UST systems do not yet have release detection. However, this situation is seen to be rapidly changing in the several state or local communities that have recently enacted UST regulatory programs. All these programs have or are phasing in some type of release detection.

III. THE SCOPE AND NATURE OF THE PROBLEM

A. Current Estimates of Leaking UST Systems

1. EPA Studies

A display of the nature and national scope of the UST problem can be found in three EPA studies. First, in May 1986, EPA published *Underground Motor Fuel Storage Tanks: A National Survey.* In addition to providing data on tank types and ages (briefly referred to earlier in this Preamble), this survey documents the results of a methodical program of tank tightness testing. Using a statistical sample, the study estimates that 35 percent of non-farm UST systems storing motor fuel would prove non-tight under the conditions of a tank tightness test. However, the survey report acknowledges several caveats regarding the interpretation of this data. For example, failing a tank tightness test does not necessarily indicate the tank or piping is leaking under non-test conditions. Under normal operating conditions vent pipes and bung hole fittings on the top of the tank do not come in contact with the substance stored in the tank and, therefore, cannot leak (however, they can leak whenever the tank is overfilled). In contrast, faulty piping that conveys the substance stored in the tank by the use of pressure pumps can potentially result in significant releases into the environment under normal operating conditions. The survey revealed, however, that most of the existing piping systems tested do not convey motor fuel using pressure pumping methods, but instead use suction methods. EPA believes suction methods are significantly less likely to result in large releases. (See Section VI.D.5. of today's Preamble for further discussion of pressure versus suction piping.)

This national survey underscores the difficulty in discovering the extent and cause of the UST "problem." Statistical analysis of the data collected could not identify any single explanatory variable—such as type of tank or type of material stored—that strongly correlated with the fact that an UST failed a tank tightness test, with one exception: UST systems 20 years old or older failed the test more often. For example, the survey results could not distinguish the extent of the non-tightness attributed to loose fittings on top of the tank or faulty vent pipes and other piping and equipment.

A second study, *Summary of State Reports on Releases from Underground Storage Tanks,* was published in August 1986. This study was based on information compiled by all 50 states concerning 12,444 reported UST release incidents that occurred between 1970 and 1984. Although it was not a statistically-based survey, this study represents the most comprehensive information pertaining to leaking UST systems currently available.

The study found a continuously increasing number of release incidents reported over time. In 1980, about 1,000 release incidents were reported. By 1985, the number of releases reported annually had jumped to well over 2,500. This sharp increase may partly be the result of improvements in state reporting systems. Most leaks were detected only after observation of obvious impacts on nearby private water wells, surface waters, basements, utility lines or soils. Leak detection usually resulted when someone saw or smelled the release—only about 10 percent of these state-reported release incidents were discovered by inventory controls or mechanical leak detection. Nearly all of the leaks involved petroleum, and most of those occurred at service stations. Corrosion and improper installation were identified most often as the cause of the leak. Leaking tanks were much more often identified to be the cause of reported releases than faulty piping. However, the volumes of the releases from piping were often estimated by state inspectors to be as large as or greater than those from leaking tanks. Piping leaks generally were also found to occur sooner in the life of the UST system than tank leaks. As with the earlier national survey, no single identifiable variable—such as tank system age or type—strongly correlated in the state release incidents survey with the fact that an UST was reported as leaking. Although only 17 percent of the state release incident reports specified impacts, those that did reported 40 incidents threatening contamination of municipal potable ground-water supplies and 749 incidents contaminating private ground-water wells (or a total of 8 percent of all reported incidents).

EPA recently sponsored another study focusing on experiences in 20 localities (either counties or cities): *Executive Summary of County/City Release Incidents* (Draft, 1986). Of the 908 local release incidents identified in this study, only about 10 percent had been identified in the previous state study. This study provides evidence that many release incidents do not appear in the state reporting systems. As a result, the state release incidents study referred to above may be describing only a fraction of release incidents nationwide. The local incident study confirms a trend also documented by the state study: more release incidents are being reported each year. For example, there were over 60 percent more release incident reports registered locally in 1985 than in the previous year.

As with the earlier studies, the local release incidents survey revealed that no single variable (such as tank type or age) correlated strongly with the leaking UST systems. However, because most existing UST systems are made of bare steel, corrosion was identified as the chief cause of releases from existing UST systems. Of the tank systems reported to have releases, the distribution of their ages and types was comparable to the earlier studies. Unlike previous studies, however, the local incident survey provided more detailed information on the impact of releases to the environment. About 80 percent of the reported release incidents resulted in soil contamination of 0.5 acres or less. About half the release incidents reporting ground-water contamination impacted 0.5 acres or less of the aquifer to a depth of less than 20 feet. Also, this study identified a strong relationship between the year leak detection requirements became effective in these local jurisdictions and an increase in the number of leaks they reported.

2. Some Local Government Experiences

Data collected locally also provide an indication of the number of UST systems that are currently leaking. New York's Suffolk County instituted tank testing requirements in 1980. The data from approximately 6,200 tightness tests required by the county's Health Department from 1980–1986 reveal that 26 percent of the tank systems failed under the conditions of the test. When these failed systems were partially unearthed and investigated, the condition of non-tightness was discovered (by more than a 10 to 1 margin) to be primarily caused by loose fittings on top of the tank or faulty piping in need of repair or replacement. Interviews conducted in 1985 with county health officials and a major local tank installer disclosed to EPA staff that the cumulative failure figures could have been much higher than reported, because many leaking tanks were voluntarily taken out of the ground after 1980 but before they could be tested under the county's program requirements. Tank testing programs in Austin, Texas, and in San Diego, California, (in which thousands of tank systems have been tested) corroborate the finding that most UST systems failing a tightness test do not appear to have leaks in the tanks, but rather loose fittings on top of the tanks and faulty piping in need of tightening or replacement.

A review of ground-water monitoring systems applied to tanks in Florida's Dade County was cited to EPA by county officials as revealing the presence of free-floating petroleum on the ground-water at approximately 10 percent of the sites where monitoring wells were installed on the top of the ground-water table. After further investigation at many of these sites, it was determined that these releases often resulted from an accumulation of spills and overfills that took place in the past.

3. Industry Estimates

The findings from some industry-sponsored studies have tended to suggest that there are very few leaking UST systems. The American Petroleum Institute conducted a survey of its membership over a three-year period ending in 1980 and had only 2,000 release incidents voluntarily identified nationally (*American Petroleum Institute Tank and Piping Leak Survey*, API Committee on Safety and Fire Protection, Washington D.C., 1981). The survey notes that data submittal was voluntary and that the number of leaks were underreported. The survey did not document the effect of releases on the environment. The survey indicated corrosion as the leading cause of leaks—over 60 percent of reported incidents.

A more recent study resulted from a merger of two companies that required the tightness testing of over 3,500 UST systems (letter to Mr. Ron Brand, Director, Office of Underground Storage Tanks, from Chevron, dated June 2, 1986). The report on this company-sponsored testing program notes that the facilities involved represented a typical cross-section of a major oil company's service stations. Using current testing procedures, all tanks were given a tank tightness test and less than 10 percent failed the test. Of that group, after further investigation, less than 2 percent were reported to have actually leaked, but instead were primarily discovered to have loose fittings on top of the tank. Looked at from a facility-wide standpoint, however, this study suggests a wider impact on the environment than do the data from tightness testing of the specific tank systems. At 90 facilities, one observation well (not necessarily in the excavation area) disclosed the presence of released petroleum products pooled on top of the ground-water table. Although 56 of these facilities had passed the tank tightness test, observation wells disclosed the presence of leaked fuel on top of the ground-water. Thus, this study's conservative figures show that releases from approximately 9 percent of these service stations (that is, 90 out of approximately 1,000 facilities) have had an adverse impact on adjacent ground-water. It is possible that many of these impacts may be the result of an accumulation of spills and overfills or earlier releases from subsequently repaired UST systems, and *not* from a currently leaking tank system.

4. The Nature and Extent of the Problem

In summary, the nation may be facing a pervasive threat to its ground-water from leaking UST systems. If even only 10 percent of the nation's gasoline service stations have leaked or are leaking (as one company-sponsored testing program of a typical cross-section of retail motor fuel outlets indicated), then releases to ground-water could exist at approximately 17,500 retail gasoline sites nationally. Many of these releases could be damaging ground-water resources and presenting threats to human health and safety. As stated earlier, retail motor fuel outlets account for only half of the UST systems addressed by today's proposals. Therefore, the actual level of existing impacts to ground-water could be significantly greater than noted above.

Despite these study findings, major uncertainties still remain. For example, fewer cases of potable well contamination have been reported and documented than should be expected with the number of releases that appear to be occurring. EPA is uncertain whether biodegradation, attenuation, the characteristics of petroleum products or other factors combine with slow ground-water movement to eliminate the problem before potable ground-waters are affected; or perhaps some other factor accounts for the proportion of contaminated wells being reported. On the other hand, it may be only a matter of time before more impacts from these numerous suspected leaks become known.

More information on these and related issues regarding the exact magnitude of the problem, or potential problem, associated with underground tanks will become available over the next several years; particularly as the release detection requirements in several lead state UST programs are implemented more fully. The findings to date, however, are sufficient to demonstrate that leaking underground tanks may be a common occurrence throughout the nation. Significant impacts have occurred; in most cases the release is detected inadvertently, by sight or smell; and a variety of available control approaches that can be used to reduce the risk of damage to public health and the environment are not yet being implemented on a widespread basis. The following sections briefly describe the major causes of UST system releases; technical options for addressing releases; and current industry, state, and local attempts to resolve the problem.

B. Major Causes of Releases

There are four major causes of release incidents: corrosion; faulty installation; piping failure; and spills and overfills. These four causes are described in the following sections.

1. Corrosion

Corrosion is reported to be the major cause of leaks from bare steel UST systems. The EPA surveys described above found that 60 to 70 percent of leaks from existing steel underground storage tank systems are reported as caused by corrosion. Because a very large number of existing UST systems are constructed of steel that is unprotected from corrosion, corrosion is presently believed to be the cause of the largest number of releases in general.

Like the more publicly seen and understood phenomenon known as "rust," corrosion is a general description of what happens when hard, manufactured metal breaks down in the underground environment into its natural form as a soft ore. The multiple ways in which corrosion works underground make it a particular threat to bare steel UST systems. The speed and severity of corrosion depend on a number of factors, including soil conditions, ground water location, and tank or piping characteristics. Corrosion can occur over an entire surface or be localized at a few spots (point corrosion). When localized, unprotected metal can corrode very quickly.

Corrosion attacks unprotected steel UST systems mainly through galvanic corrosion. In this case, the bare steel tank system and its underground surroundings act like a battery. For example, part of an unprotected tank can become negatively charged and another part positively charged (or the bare steel tank and its connected piping can become differently charged, particularly if the piping is galvanized). Once a connection is made between these differently charged parts of the system, a full electric circuit is completed. Many factors can account for the slight differences in the charged parts, including even minute differences within the metal on the surface of the same bare tank or between the bare metal of a pipe's thread (or joint) and the pipe itself. Various soil conditions provide the connecting link to complete the electric circuit.

Once the electric circuit begins, the negatively charged part of the tank or piping—where the current exits—starts to deteriorate (sometimes very rapidly). As electric current passes through this part, the metal begins to turn into ore. Eventually holes are formed by this galvanic corrosion and the tank or piping leaks.

A variation of this problem occurs when the UST system is in the path of underground electric currents. For example, if a subway system or other power system operates near an unprotected UST system, stray current from that system can pass through the UST system. When stray electric current passes through an unprotected steel UST system, corrosion—like the galvanic corrosion described above—occurs in the area where the current leaves the tank or piping.

The rate at which this localized corrosion occurs is directly related to the intensity of the stray current. The larger the current, the faster the corrosion rate. Stray currents are often many times stronger than the currents in galvanic corrosion. Thus, stray current corrosion may occur over a wide surface area of a tank or pipe and at some distance from the power source.

Corrosion can be caused by many conditions and these conditions are almost always present when bare steel is placed underground. In addition, corrosion is generally a gradual process. Thus, the longer unprotected steel tanks or piping are in the ground, the more likely they will be subjected to the many conditions that promote corrosion.

2. Installation Failure

Another significant but less frequently reported cause of leaking UST systems is failure resulting from improper installation. EPA's local release incident study found about 25 percent of the release incident reports cited improper installation (often reported as "structural failure") as the cause of the release (*Executive Summary of County/City Release Incidents*, Draft 1986). Improper installation is a term that encompasses a variety of problems. According to industry reports and consensus codes, installation mistakes that can cause tanks or piping to leak include:

- Inadequate pit and trench design;
- Improper handling of a tank at a site;
- Improper tank bedding and placement;
- Poor or unsuitable backfill material and/or compaction procedure;
- Improper tank or piping depth;
- Inadequate anchoring in high ground-water table conditions; and
- Improper installation of attachments, particularly the fittings on the piping.

The term "structural failure" was often used to describe a wide range of causes of tank releases. For example, the most common "structural failure" reported by state agencies resulted from vehicles colliding with gasoline pumps. Other reported causes of structural failure provided in EPA's State Release Incident Survey also point to accidents, or poor installation practices, rather than integral deficiencies in the tank or piping structure (such as improper anchoring of tanks or the rupture of tanks and piping caused by excessive external load due to vehicular traffic, backhoes, shovels, or snow plows).

3. Piping Failure

According to EPA's State Release Incident Survey, over 20 percent of reported releases from UST systems resulted from failure of underground piping. The same study identified piping as the location of over 50 percent of reported structural failure incidents. Also, piping failures accounted for more of the largest release incidents than either tanks or surface spills. Although this was not a statistically-based survey, the number and proportion of the incidents resulting from piping failures was an important finding. These figures underscore the necessity that today's proposed regulations for release prevention and release detection apply to the tank system's piping, as well as to the tanks themselves.

As noted in the sections above, piping is subject to the same harmful effects of corrosion and installation/structural failure that affect tank failures. As a result of its thinner walls, numerous connecting parts, and more vulnerable location nearer the ground surface, piping may be more susceptible to corrosion and installation/structural failure than tanks. More than half the piping structural failures were reported to occur in the supply line between the tank and the pump; however, a significant number of the documented failures involve the fill pipe, loose pipe fittings, and the vent pipe.

As was discussed previously, several locally-required tightness testing programs have resulted in the recent testing and evaluation of several thousands of existing tank systems nationwide. Further investigations of the non-tight systems have consistently implicated the faulty condition of the piping, vent lines, and fittings on top of the tank much more often than the tanks themselves. Although the phenomena of UST system failures are not yet completely understood and documented by EPA, evidence to date from the field appears to indicate that piping failures may be a more common occurrence than tank failures (particularly if a loose bung hole cover on top of the tank is not considered a "tank failure"). Although the results of the State Release Incidents Study do not indicate such a preponderance of piping-related releases, the in-the-field tightness testing results do not necessarily contradict those study findings. Many of the incidents reported by the states were identified because of the impacts of these releases in the surrounding environment. A significant amount of faulty piping is apparently not having noticeable (and reportable) impacts. This is a plausible result given the still predominant use of suction pumping methods at existing tank systems nationwide.

4. Spills/Overfills

According to the *Summary of State Reports on Releases from Underground Storage Tanks*, about 15 percent of the

release incidents studied resulted from surface spills—usually spills caused by human error. These spills occurred during transfer operations as the stored product moved from delivery truck to storage tank.

Although these spills are usually small, frequent spills can accumulate to sizable volumes over a period of time. Even repeated small spills eventually contaminate the soil and can affect groundwater. Repeated spills may increase the corrosive nature of soil and thus accelerate the corrosion of unprotected steel tanks and piping. Further, spilled material is not detected by in-tank leak detectors and can interfere with the capability of external monitors to detect leaks from the UST system.

There are two major types of spills. *First,* product transfer spills occur when the couplings on the ends of the discharge hose are improperly disconnected and release the stored product onto the ground. Transfer spills normally occur near the tank fill pipe area and release liquid into the manhole around the fill pipe. Eventually, these releases can contaminate the groundwater, because the soil around the manhole is usually very porous to allow for water drainage. *Second,* spills occur when the storage tank is overfilled during delivery operations. When the tank liquid level exceeds the tank capacity, stored product escapes onto the ground around the fill pipe's openings or out of the vent pipes.

C. Technical Options Available to Address Causes of Releases

Generally, the technical options available for preventing releases from UST systems fall into the following categories: (1) design, construction and installation requirements; (2) corrosion controls; and (3) operation and maintenance requirements (e.g., spill and overfill controls). Options for detecting releases when they occur may include inspections or requirements for a release detection system. EPA has considered the advantages and disadvantages of each of the available technical options and the degree of assurance they provide individually and jointly for protection of human health and the environment. The following paragraphs describe these technical options in greater detail.

1. Corrosion Protection

One way to protect steel tank system components from corrosion is to disrupt the UST "battery" (as described earlier) by reversing its electric circuit. Galvanic corrosion results when an electric current leaves the tank. If the flow of current is reversed, tank corrosion can be stopped. This kind of protection is called "cathodic." Cathodic protection systems reverse current flow by using either sacrificial anodes or impressed current. "Sacrificial anodes" can be attached to the UST system. Sacrificial anodes are pieces of metal more electrically active than the steel UST system. Since these anodes are more active, the electric current will exit from them rather than the tank. Thus, the "cathode" of the tank remains protected and free of corrosion while the attached "anode" is sacrificed. An "impressed current" protection system introduces an electric current into the ground through a series of anodes *not* attached to the UST system. Because the electric current flowing from these anodes to the tank system is greater than the corrosive current flowing away from the tank, the UST system is protected from galvanic corrosion. Regardless of which cathodic protection system is selected, the system requires monitoring because soil and tank conditions can change over time and alter cathodic protection needs.

Steel UST systems can also be protected from corrosion by applying coatings of a noncorrodible material, by isolating the tank electrically, and by adding soluble corrosion inhibitors to the regulated substance being stored. (Of course, tanks can also be constructed totally of noncorrodible materials.) Corrosion is a complex process that is influenced by many variables, many of which are site-specific. This complexity, particularly with respect to retrofitting corrosion protection on existing tanks, makes it difficult for owners and operators to select the optimum corrosion protection system without outside expert assistance. For new tank systems, this selection process is much easier. Protection systems are available that are premanufactured as part of the tank at the factory, but even these systems must be properly isolated from attached piping, which itself must be separately protected. Even when the optimum system has been selected, it must be properly installed and maintained or the effectiveness of the system is degraded. Over 100,000 tanks with premanufactured protection systems have been installed nationwide. The manufacturers of these tanks now provide 30 year warrantees and report no failures to date due to corrosion that have resulted in releases.

When properly designed, installed, and maintained, several corrosion control methods, or combinations of methods, will provide significant protection against corrosion. The Agency recognizes no system as foolproof, however, and believes human error or negligence will over time eventually result in some corrosion-induced releases, even from some protected systems. While they are not expected to be sufficient to prevent all corrosion-induced failures, the Agency has concluded that available corrosion protection measures can significantly reduce corrosion from current levels.

2. Design and Construction Standards

According to EPA's State Release Incidents Survey, a number of UST releases have been attributed to structural failure, especially releases from FRP tanks. There is no hard evidence, however, that these structural failures are the result of deficiencies in design and fabrication standards or workmanship at the factory. Rather, the evidence suggests that poor installation practices account for most of these releases. For example, a tank that is adequately designed is dependent upon proper backfill for structural integrity.

Most new tanks and piping have been designed to the standards set forth in national consensus codes. Even the vast majority of existing UST system components are believed to have been professionally designed and tested to withstand normal stresses and load with an extra margin of safety. Thus, besides corrosion-induced failures, most structural failure in the tank or piping itself is the result of improper installation practices.

Although information on proper UST system installation practices is provided in many local consensus codes, such guidance is often inadequate because details are frequently vague. More detailed national codes and industry-recommended practices covering underground tank system installation are found in the Petroleum Equipment Institute's "Recommended Practice 100–06" (1986); the National Fire Protection Association's "Flammable and Combustible Liquids Code 30" (1984); and the American Petroleum Institute's Publication 1615, "Installation of Underground Petroleum Storage Systems" (1979). These documents were developed for petroleum storage, but installation procedures for tanks used in other liquid storage situations are very similar. Tank manufacturers have also developed detailed, explicit installation recommendations. If these recommendations were followed carefully, many installation problems that may lead to eventual tank failures could be prevented. Even while using these more detailed codes, however, installations are subject to human error and abuse. Thus, installation-caused

releases can be significantly reduced by adherence to proper practices, but EPA does not believe that they can be eliminated entirely.

As noted previously, structural failures are reported to commonly occur in underground piping and ancillary equipment. Many such failures are suspected to be caused by corrosion that eventually results in these weakened systems succumbing to the typical mechanical and thermal stresses that occur during daily operations. Some piping releases are also due to sloppy installation practices, such as incomplete tightening of fittings or improperly installed seals. Thus, even if piping and ancillary equipment are corrosion protected, EPA believes that some releases will still occur due to human error or negligence in adherence to proper installation procedures.

3. Spill and Overfill Equipment and Practices

Many releases have been traced to spills and overfills that occur during day-to-day operations. These releases usually result from human error. Overfills appear to represent a significant portion of operation and maintenance releases, yet they pose different problems from those associated with leaks from UST systems. For example, when an overfill occurs, the volume released is limited and cleanup can usually take place quickly.

Because these spills are more limited and immediately obvious than releases from UST systems, engineered safeguards, such as overfill alarms, shutdown pumps, or catchment basins around the fill pipe can be installed to help prevent many spills and overfills. Recommended industry practices, such as NFPA 30, also provide procedures that can be followed during the tank filling process to avoid spills and overfills. Further discussion of spill and overfill management controls and equipment appears below in Section VI.C.1.

4. Inspections

Physical inspections can be conducted of the UST system site and equipment in order to detect existing releases and/or to identify problems that could lead to releases if not repaired. Early responses to releases or threatened releases can reduce risks to human health and the environment.

Inspections in conjunction with tank tightness tests, soap tests, air pressure tests and spark tests (for protective coatings) can be most usefully conducted at the time of UST installation to assure the integrity of the new system. Since most UST systems are buried completely underground, inspections of the installation are not very useful after installation is completed.

The inside of the tank can be inspected if the tank has a manway entrance and the tank is carefully cleaned out before internal inspection begins. Periodic internal inspections are a widespread practice in Europe, but they are rare in this country because most of our tanks do not have manways. Available internal inspection equipment includes penetrant dyes, vacuum boxes (for seam testing), ultrasonic instruments and radiographic equipment. Some of this equipment, however, does not provide a clear indication of the current status of an UST system's integrity or condition, particularly on the outside of the tank. None of these methods can be applied to underground piping because it is generally covered and inaccessible to inspection.

5. Operation and Maintenance

The exercise of good housekeeping practices and the proper operation and maintenance of equipment can further curtail releases from UST systems. Periodic maintenance of serviceable equipment such as pumps, accessible valves and dispenser units can forestall their breaking down and perhaps leaking due to normal wear and tear. Unfortunately, with UST systems, there do not appear to be many opportunities to service buried components nor is there a clear understanding of how much maintenance is warranted to prevent releases (e.g., the time period for replacing gaskets on pumps).

6. Release Detection Requirements

There are a number of release detection methods that can be applied to UST systems, particularly those storing petroleum. Numerous devices are marketed today and many more are under development. Traditionally, the principal method of leak detection used at UST systems has been manual product inventory control, sometimes supplemented with a tank tightness test to verify suspected releases. Manual inventory reconciliation, however, has been a controversial method of release detection, principally because of human error or negligence in properly measuring, recording and reconciling the measurements with records of receipts and dispersals. A recent EPA study revealed that only about 20 percent of the surveyed retail service stations kept adequate inventory records (*Underground Motor Fuel Storage Tanks: A National Survey*, May 1986).

As UST system owners and operators have become more environmentally aware, as the cost of cleanup from releases has become known, and as various state and local jurisdictions have passed legislation requiring more reliable forms of release detection, the types of devices that are available for release detection have proliferated. In addition to tank tightness testing and inventory controls, there are several other broad categories of release monitoring techniques specifically addressed by today's proposal:

- Soil gas monitoring in the excavation area;
- Monitoring for liquids on the water table;
- Interception barrier well monitoring;
- Automatic in-tank monitoring; and
- Interstitial monitoring of secondary containment systems.

The limitations associated with each of these techniques (which are discussed in more detail later in this Preamble) stem from the capability of each of the three major components found in any release detection method: (1) Sensors; (2) network design; and (3) data analysis. The major problem EPA has encountered in assessing the reliability and effectiveness of these systems has been a lack of data. EPA has embarked on a research program to gather some performance data, but expects that it will take a considerable period of time to collect such information. There presently is also very little information and experience concerning the installation and operation of these different methods.

There are other methods besides those mentioned above, however, which may merit consideration for inclusion in the regulations. A good example is that of line leak detectors. Methods for detecting releases from pipes conveying products under pressure are purported to be very sensitive in detecting release conditions. Therefore, EPA does not believe that the above general methods list is exhaustive. All of these above methods are discussed in more detail in today's Preamble and more specific public comment and information is solicited (see also Section VI.D.). 12715

IV. IMPORTANT INFLUENCES ON TODAY'S PROPOSAL

To reach the environmental goals mandated by Subtitle I, EPA has considered the influence of each of the following four areas on the development of today's proposal. In each case, the Agency has sought to build upon existing trends in UST system management and regulatory practices in order to ensure more rapid and efficient

implementation of a consistent, nationwide regulatory program affecting a large universe of over 1.4 million UST systems at over 500,000 facilities.

Experience to date shows that many different institutions are already or are soon expected to become involved in the UST regulatory program, including municipal and volunteer fire departments, local health departments, weights and measures inspectors, and both water and hazardous waste regulatory personnel. As the future franchiser of these various state (and local) agencies, EPA believes it must enable these franchisees to establish a basic program and continually work at helping them improve performance over time. Thus, an important consideration in developing today's proposed regulations was to identify approaches that are, to the extent possible, implementable in the field by someone else besides highly trained EPA employees.

The following important influences were considered in developing today's proposal. They provide some indication of how likely today's proposal, or any other basic regulatory approach, will be quickly and voluntarily implemented by this large and diverse regulated community. To promote this nationwide UST franchise, EPA must develop regulations that are readily implementable in the hands of the state and local franchisees, or human health and the environment will not be adequately protected. Accordingly, these influences were important considerations in the evaluation of the several regulatory options discussed in Section V of this preamble.

A. Recommended Industry Practices and National Consensus Codes

Trade associations, institutes and other private organizations have developed technical codes and standards of practice to standardize the design, fabrication, and operations of a variety of tank management alternatives. Historically, the management of UST systems has been addressed and guided by these nonbinding industry standards or practices. Even where state or local UST system regulations are in effect, these industry standards and/or codes are often incorporated into law by reference.

EPA has carefully considered this body of knowledge and expertise in the private sector which has developed and administered these codes and recommended practices. A partial listing of some of the standards and codes that EPA identified in developing today's proposal is provided in Table 2. An important influence on today's proposal is the recognition of this available experience and expertise in underground tanks.

TABLE 2.—MAJOR CODES, STANDARDS, AND RECOMMENDED PRACTICES FOR UNDERGROUND STORAGE TANKS

Corrosion protection	Leak detection	Tank manufacturing	Tank installation	Tank cleaning	Internal lining	Abandonment or removal of underground tanks	Venting and air emissions
NFPA-329	NFPA-329	API-12F	API-1615	API-2015	API-1631	API-1604	API-2000.
NFPA-30		API-12D	PEI-RP-100-86	API-2015A		API-2202	NFPA-329.
NACE RP-01-9		API-650					
API-1621		API-620		NFPA-30	NFPA-30	NPFA-30	
API-1623	NACE RP-01-69	UL-58	UL-58	NFPA-49	NFPA-49		
NFPA-49		ANSI-31.3		NFPA-327	NFPA-321		
NFPA-43C	NACE RP-03-72	UL1316				UFC	
NACE-RP-02-85		ASME-STDS VESSEL CODES			NACE-STDS FOR SURFACE PREPARATION		
		UL-1316					
		UL-1746					
NFPA-30	NFPA-70	API-2510	API-620	API-1628			
NFPA-49	NFPA-77	NFPA-30	API-510	NFPA-30			
	NFPA-78	NFPA-49		NFPA-49			
		NFPA-58		NFPA-329			
		NFPA-510					
		NFPA-69A					
		ASME-STDS					
		ANSI-STDS					

Key: NACE—National Association of Corrosion Engineers; API—American Petroleum Institute; NFPA—National Fire Protection Association; ASTM—American Society of Testing and Materials; UL—Underwriters Laboratories; PEI—Petroleum Equipment Institute; ANSI—American National Standards, Inc.; ASME—American Society of Mechanical Engineers; UFC—Uniform Fire Code.

While the existing codes and standards of practice form an important body of technical information, to date they have not been universally applied. For example, most existing UST systems do not have release prevention or detection controls. In some cases, EPA questions the ability of commercially available equipment to meet industry-recommended requirements, such as the ability of release detection devices to reliably detect a leak rate of 0.05 gallons per hour. In other cases there is inconsistency among the existing codes and standards of practice. Also, many of these existing practices were developed without consideration of the increased concerns with environmental protection that prompted today's proposal. Finally, some emerging technologies are not yet covered by existing codes. Therefore, today's proposal is intended to build upon this existing body of knowledge and to go beyond it when necessary to fill in gaps or provide consistency.

B. Current Status and Future Role of State and Local UST System Programs

Many states currently have some UST legislation in place. Most of these existing programs are based on national fire code guidelines. However, at least 14 of them have recently developed very comprehensive approaches that address all aspects of UST system management. A number of county and city governments have also recently passed similar comprehensive UST system requirements. In today's proposal, EPA has attempted to construct requirements that will complement and encourage the initiatives taken by state and local governments to manage their own UST programs.

Because the existing regulatory framework is primarily the result of independent efforts at the state and local level, a variety of approaches have been taken. In some cases the approaches reflect regional factors; for example, ground-water monitoring requirements in Florida were influenced by the prevalence of a shallow depth to ground water. In other cases the

differences in approach, scope, and coverage may simply be due to local practices or preferences.

EPA has evaluated these many different state and local approaches towards regulating underground tanks, and today's proposal builds upon this existing state and local regulatory framework. In supporting these existing regulatory programs, EPA hopes to achieve the goals of Subtitle I more quickly and efficiently than would be the case if it were to propose regulations greatly different from requirements that are widely accepted and already being implemented.

C. Major Trends in the Industry

Voluntary changes are occurring in underground tank system management in the retail motor fuel sector. EPA estimates that by 1997, about three fourths of the 700,000 tanks in the retail motor fuel sector will be replaced, upgraded (to the requirements of the Interim Prohibition), or removed from service. This change could occur even in the absence of finalizing today's proposed federal UST system requirements, based on well-documented past trends in the retail motor fuel sector, including a new tank installation rate of about 25,000 per year and a 4.2 percent rate of motor fuel tank system closures per year ("Regulatory Impact Analysis for Proposed Underground Storage Tank Regulation," dated 1987).

This trend to voluntarily upgrade and replace underground tank systems may actually accelerate as major oil companies and other tank owners respond to several factors: the aging of the existing tank systems (more than 50 percent will be over 14 years old by 1990); increasing public awareness of the vulnerability of the nation's groundwater resources; increasing publicity of some underground storage tank release incidents that involve large dollar damage claims and cleanup costs; and the rising cost and scarcity of environmental liability insurance.

In addition, a growing number of state, county, and city governments are requiring some form of leak detection for UST systems. This is probably the result of many of the factors cited above.

Today's approach has been developed to take advantage of and encourage these ongoing, beneficial changes in underground tank system management. It will assure that all segments of industry and geographic areas will participate in these changes, and that needed improvements in UST system management are established nationwide. The Agency intends to foster these trends in voluntary, compliance as an efficient route to implementation of the requirements of Subtitle I.

D. The Number of Small Businesses Owning or Operating UST Systems

A large proportion of operating USTs are owned by small businesses (businesses with $500,000 or less in total assets). For example, 72 percent of all retail motor fuel outlets are owned by small businesses. The small businesses in this sector most likely to be subject to adverse impacts as a result of UST regulations are the open dealers (firms that own a single retail motor fuel outlet). A typical open dealer (the statistical median) has $90,000 in net worth, $210,000 in assets, and $14,000 per year in after-tax profits. Although the typical open dealer is currently a healthy and profitable business, this class also includes many firms owning old, marginal outlets that would be forced to close if faced with significant new expenditures.

In addition to open dealers, any marginal small businesses in the retail motor fuel sector could easily be forced to close as a result of incurring any major regulatory expenditure, including those associated with tank replacement or corrective action. Because of their small size, even profitable small businesses will have difficulty financing major regulatory costs; especially if they face the costly corrective action of cleaning up ground water.

As an important influence in the development of today's proposal, EPA has attempted to minimize regulatory impact on small businesses without compromising the statutory requirements to protect human health and the environment. For example, as will be discussed in Sections V and VI of this Preamble, the corrective action requirements have been specifically developed in a way that protects human health and the environment while maintaining maximum flexibility for owners and operators, including small businesses.

EPA has also conducted a Preliminary Regulatory Flexibility Analysis, as specified by the Regulatory Flexibility Act of 1980 (5 U.S.C. 601–612). This Regulatory Flexibility Analysis is summarized in Section IX.B. of this Preamble and is specifically concerned with potential impacts on small businesses. An important conclusion from this analysis is that significant impacts on small businesses are inevitable, even in the absence of federal UST regulations. Many existing tank systems are old and are either leaking or will soon leak. They will need to be upgraded or replaced. Major capital expenditures, such as the replacement of a tank system, are beyond the reach of many small businesses. These changes may be hastened by future regulations, but many appear to be inevitable no matter which regulatory approach is developed by EPA. Today's proposal attempts, to the extent possible, to provide important flexibility to small businesses in upgrading their USTs to detect and prevent future releases and this flexibility was an important concern recognized in the development of today's proposal.

V. TODAY'S PROPOSAL

This section provides a summary of EPA's proposed rule. It also sets forth the various alternative strategies considered by EPA, the advantages and disadvantages of those alternatives, and EPA's reasons for selecting the proposed alternative. Comments and relevant information are solicited on all the options EPA has considered and, based on a consideration of these comments and information, the Agency may reconsider the option selected in development of the final rule.

A. Summary of Today's Proposal

EPA is today proposing regulations for underground storage tanks storing either petroleum or hazardous substances other than hazardous wastes regulated under Subtitle C of RCRA. These regulatory measures would establish requirements for both new and existing UST systems to control the major causes of releases from these tank systems, and include corrosion controls, proper installation requirements, and spill and overfill prevention measures. The proposed requirements of Part 280 would fulfill the mandates of RCRA Sections 9003 (a), (c) and (e). The major elements of today's proposal are noted below.

- All new UST systems must be designed and constructed to retain their structural integrity for their operating life (that is, in accordance with existing national consensus codes of practice), including the use of corrosion protection of metal components. Cathodic protection must be monitored and maintained to ensure that UST systems remain free of corrosion.
- Proper installation standards must be followed in placing a new UST system into service. The UST's owner and operator must certify that proper installation procedures were followed and identify how the installation was accomplished (for example, installation by a licensed or certified installer).

• Owners and operators of both new and existing UST systems must immediately follow proper tank filling practices to prevent releases due to spills and overfills. In addition, owners and operators of all new UST systems, and existing UST systems equipped with external release detection, must use devices that prevent spills and overfills.

• Tanks can be repaired, but only once, if they are in sound enough condition to be repaired. Recommended industry practices must be followed to conduct repairs, and in addition several tests must be conducted to ensure quality repairs.

• Industry-recommended practices with regard to tank system closure must be followed and, accordingly, the UST system must be removed from the ground or left in place after removing all regulated substances, filling with an inert substance, and closing it off to all future outside access. In addition to these recommended industry practices, all owners and operators must perform an assessment at the time of tank closure to ensure that a release has not occurred at the site. If a release has occurred, then corrective action must be taken.

• Release detection must be instituted at all UST systems. For petroleum UST systems several methods will be allowed, although requirements concerning their use must be adhered to by tank owners and operators. Petroleum UST systems are not required to have secondary containment with interstitial monitoring. Secondary containment and interstitial monitoring will be required at all new or upgraded UST systems storing hazardous substances, unless a variance is granted. Implementing agencies may provide these variances if the owner or operator can demonstrate that a release detection method can be applied reliably.

• Phase-in of release detection at existing UST systems must occur over a 3- to 5-year period. Bare steel UST systems unprotected from corrosion are required to phase in release detection within the shorter time period.

• Requirements for reporting releases are established. Indications of a potential release would have to be reported to the implementing agency, including positive results from release detection methods that have been immediately investigated by owners and operators. After reporting releases, release investigation and confirmation must take place and, where necessary, corrective action must begin.

• All existing UST systems must be upgraded or replaced to the new tank standards within 10 years, or within 3 to 5 years if a release detection method is not available that can be relied upon to detect releases from the UST system. Upgrading of petroleum UST systems would include retrofitting of corrosion protection and spill and overfill controls at all tanks; upgrading of hazardous substance UST systems would also include secondary containment and interstitial monitoring (unless a variance is granted by the implementing agency based on a demonstration and approval of the capability of the hazardous substance UST system's release detection method).

• Finally, today's proposal requires owners and operators of leaking UST systems to follow measures for corrective action. Immediate corrective action measures include mitigation of safety and fire hazards; removal of saturated soils and floating free product; and an assessment of the extent of further corrective action needed. A corrective action plan would be required for long-term cleanups addressing ground-water contamination. Cleanup levels would be established on a site-by-site basis as approved by the implementing agency that would oversee the cleanup by the owner and operator.

EPA believes that the above requirements adequately protect human health and the environment. Individual states and UST owners and operators should recognize, however, that the most cost-effective approach to protection at a single tank site or in a geographic area may involve features that exceed the minimum requirements that apply nationally. For example, if a shallow drinking water source supplying nearby wells underlies a tank site, the cost of a potential cleanup may greatly exceed the national average. At a few such sites, ground-water cleanup has become a long-term program, costing millions of dollars because of the great difficulty of restoring high quality aquifers. In these cases, a preventive approach—such as the installation of secondary containment for new or replacement tanks—may be advisable, even though today's regulations do not propose making this a national requirement. EPA therefore encourages states and individual owners and operators to evaluate local conditions carefully and to select tank systems and associated equipment in accordance with local conditions and needs, rather than merely to achieve compliance with federal requirements.

B. Considerations Underlying EPA's Proposed Approach

In developing today's proposal, EPA took several important considerations into account. As several studies briefly discussed in Section III indicate, many existing UST systems lack corrosion protection, release detection, and overfill and spill controls. Thus, they are the most likely ones to leak over time, and they present the greatest immediate threat to human health and the environment. A significant number of these existing UST systems are already leaking or are likely to leak in the near future. These studies also show that many of these releases are likely to reach ground water and some will pose threats to our drinking water resources, health, and safety. While there are many technical alternatives available for improving this situation, the relative long-term performance of many of these alternatives is uncertain.

In reviewing regulatory choices, EPA concluded that certain management practices are essential to a successful regulatory program. The Agency concluded that any regulatory approach must provide for the improvement of future tanks and piping by requiring standards for the proper design, construction, and installation of new tank systems, as well as corrosion protection for all steel tank systems.

The Agency also concluded that the above measures alone would not completely eliminate all releases from new tanks. Because of the problems that may still occur, particularly with improperly installed new tank systems, the Agency concluded that release detection and corrective action will be needed in any regulatory approach to new tank systems. Because it is difficult to retrofit existing tank systems with measures for the prevention of future releases, the Agency concluded that any regulatory approach should also provide for the identification of currently leaking UST systems, detection of future releases, and the phased-in replacement or upgrading of existing leak-prone UST systems.

As new and improved tank systems replace old UST systems, EPA expects that releases will decrease significantly. EPA also expects a greater proportion of releases that do occur will result from human error in installation or operation rather than corrosion. This change in emphasis—from mechanical to human error—influenced the Agency's decision-making because regulatory requirements and programs can be developed to ensure human mistakes are minimized to the greatest extent possible.

The above basic considerations, goals, and assumptions were important to the Agency's choice of today's proposed regulatory approach. Their contribution in the Agency's decision-making is more

specifically illustrated in the discussions of the regulatory options that follow.

C. Options Considered for New and Existing UST Systems

In developing today's proposal, EPA evaluated several regulatory options for a general approach towards regulating new and existing UST systems. The following subsections describe these options. Further consideration will be given to these options based on public comments and any additional data received prior to final rulemaking.

1. New Petroleum UST Systems

EPA considered three regulatory options for new petroleum tanks: (1) protected single-walled tanks with release detection; (2) secondary containment with interstitial monitoring; and (3) a class approach based upon the degree of risk posed by proximity to valuable ground-water resources.

Option 1: Protected Single-Walled Tanks With Release Detection

Under the first option, EPA would require new tanks to be constructed of a single wall, protected from corrosion, and equipped with a method of release detection. (Of course, owners or operators of new UST systems could voluntarily exceed these requirements, for example by use of secondary containment and interstitial monitoring.)

Under this option, EPA must make additional decisions concerning allowable methods of release detection and the frequency with which those methods would be used. For example, EPA would have to decide whether to require any one or a combination of release detection methods, such as tank tightness testing, inventory controls, ground-water monitoring in the saturated zone, liquid monitoring on the water table, vapor monitoring in the unsaturated zone, or automated monitoring within the tank. EPA would also have to determine the frequency with which these methods must be applied. This frequency could range from continuous monitoring to an infrequent "check" of the tank system. These decisions concerning release detection are discussed in Section VI.D. The following discussion focuses on EPA's choice between single-walled tanks and secondary containment systems for petroleum UST systems.

There are several major advantages in allowing the use of protected single-walled tanks. This option should prevent most of the releases that commonly occur today. It provides the regulated community flexibility to choose among the widest range of protective release prevention and detection options to comply with the regulations. It costs less initially than the other options. And, because this option builds on existing industry practices and is consistent with most state programs now under development, it is most likely (of all the options) to gain voluntary compliance from the regulated community. This approach also has the additional advantage of leaving more options open to the states in defining classes of UST systems or locations.

One significant disadvantage of this option is that the performance of release detection methods is relatively uncertain and detection is not guaranteed at every site that may have a release. Thus, under this option, there is risk that some releases will occur that cause significant damage to groundwater resources before being detected through smell, taste, or other means. Another disadvantage is that long-term costs may be greater than for the secondary containment option due to the use of unproven release detection methods, and to increases in corrective action, operational, and insurance costs. Finally, in contrast to secondary containment (which is designed to capture releases before they have such adverse impacts on the environment) under this approach more drinking water aquifers may be affected, even when releases are ultimately detected and corrective action is taken.

However, EPA believes that there will be few releases from a protected single-walled tank system with release detection which will occur, go undetected, and cause significant damage before corrective action is taken. EPA anticipates that many of the releases occurring today will be prevented by corrosion protection measures. For example, the Canadian Province of Ontario's UST Program has caused 72 percent of their UST universe to be made of noncorrodible materials or provided with corrosion protection since 1974 and government officials report there has not yet been one release discovered from all these protected tanks. Officials from Denmark report similar successes with corrosion protection technology, which has been in use there since 1974. Thus, EPA believes releases will occur much less frequently with new tanks that conform to today's proposed regulatory standards for design, construction, installation, and corrosion protection. Because of human error, especially with respect to installation and operation of underground piping systems, EPA anticipates that releases will continue to occur at some new tank systems. However, release detection methods will be capable, in most instances, of detecting these releases and the number of releases that go undetected should be very small.

As discussed in Section VI, the Agency believes that certain release detection methods are very promising (although not yet completely understood) in their capacity to detect petroleum releases. For example, the Agency believes that various methods used in the excavation zone can be relied upon if certain conditions pertaining to the network of monitors, the backfill, and the hydrogeology are satisfied. The Agency believes that the more frequently these methods are applied, the more reliable they will be in detecting releases. Thus, a continuous monitor or a method that is sampled frequently is more likely to detect releases when they are still small and more easily corrected.

Based upon the above conclusions, the Agency has decided to propose release detection methods sampled on a frequent to continuous basis as capable of detecting the majority of leaks that occur from new petroleum tank systems. Therefore, EPA believes that protected single-walled tanks with these leak detection systems will protect human health and the environment. The Agency solicits any information that may indicate less frequent monitoring may be sufficient if new UST systems are protected from corrosion and carefully installed.

Option 2: Secondary Containment With Interstitial Monitoring

The second option considered by EPA was to require all new UST systems to have secondary containment with release detection in the interstitial space between the tank system and the secondary containment. Under this option, the owner and operator could obtain a variance from the secondary containment requirement upon demonstration to the implementing agency that the tank system has a release detection system that works as effectively as secondary containment with interstitial monitoring.

The major advantage of this option is the added degree of protection it affords. Secondary containment provides two complete barriers to prevent releases, and a simpler, more certain system for detecting releases between the barriers. Requiring all new UST systems to use secondary containment and interstitial monitoring, which is widely believed to be the most accurate monitoring available, would guarantee that fewer releases would go undetected. This is potentially important because cleanup

to drinking water standards can be very difficult and expensive to achieve. Another possible advantage of this option is the long-term savings from reduced costs for corrective action, insurance, leak detection, operation and maintenance. EPA estimates that the added initial costs may be fully offset by these savings and that fewer acres of ground water and soil will be damaged, if this option is chosen. In addition, this option avoids problems that could arise if owners or operators are unable to pay for corrective action, because this is the only option that requires containment of all releases. Finally, this option provides the advantages of being simple, easy to understand, and easy to administer and enforce. Frequent to continuous interstitial monitoring provides enforcers with a mechanism for checking releases instantly. Further, EPA has found no corrective action technology capable of bringing water quality back to national standards, which makes avoidance of releases even more important.

There are several disadvantages, however, to requiring secondary containment as a general rule. First, its initial costs are higher than those for the other options. Although secondary containment may save costs in the long run by reducing the need for corrective action, the higher initial costs would have more adverse impacts on small businesses than any of the other options. (See Regulatory Impact Analysis, Section IX.) Also, the incremental benefit it provides over the single-walled tank system may not be substantial, because relatively few releases are anticipated from new, single-walled, protected tank systems and leak detection systems are expected to be relatively effective with the single-walled tanks. In addition, the secondary containment option conflicts with most emerging state and local programs and significantly curtails state flexibility to allow other approaches. Thus, requiring secondary containment may discourage states from adopting an UST program or may delay state program approvals. Accordingly, EPA could be placed in the difficult position of directly administering a very large regulatory program. Reliance on an overburdened federal program could result in slower compliance with regulatory requirements for new UST systems and a corresponding delay in addressing leaking UST systems. The delay in achieving compliance with these requirements may be exacerbated by a reluctant regulated community discouraged from replacing existing tanks because of the higher cost of secondary containment. Also, because this approach is contrary to the ongoing voluntary selection within industry of single-walled protected tank systems, it would be less selfimplementing. Finally, requiring secondary containment would eliminate the use of protected single-walled technology, which EPA considers to be a relatively effective alternative now widely available and used.

The Agency solicits comment and information concerning the need for, and feasibility of, requiring secondary containment with interstitial monitoring at all new UST systems.

Option 3: The Class Approach

The third option was to require secondary containment at a class of locations where tanks pose a particularly high risk and to allow protected single-walled tanks with release detection at all other locations. Under this option, EPA would need to establish criteria for the high risk settings, usually involving ground water, where "extra" protection would be required. Several alternative criteria are possible: "Class I" ground-water areas, as defined in EPA's Ground-Water Protection Strategy; "wellhead protection areas" designated under the new program established by the Safe Drinking Water Act Amendments of 1986; or areas established by the states, if they satisfy certain minimum criteria established by EPA. Alternatives for determining the class of high risk locations and an approach for achieving implementation by state programs are discussed in more detail in Section V.E. below.

The major advantage of a class approach is that it allows EPA to tailor more closely its requirements to the risk presented at a particular location, thereby minimizing overprotective regulation. It would allow EPA to take a more preventive approach (secondary containment) at locations where a release would present the greatest threat. This approach would permit the Agency to provide this extra protection to sensitive areas without overregulating tanks located in less sensitive areas. EPA estimates that this option is potentially the lowest cost of the three options because the requirements that are more costly in the initial stages of the operational life of a new UST system are tailored to apply only in the more sensitive or vulnerable settings. In addition, the class approach would encourage state efforts to identify and provide greater protection to their most important ground-water resources, activities that EPA supports with funding under the Clean Water Act for development of state ground-water protection strategies. Funding for state designation of wellhead protection areas under the Safe Drinking Water Act will begin in Fiscal Year 1988.

The class approach, however, has several drawbacks. First, it adds a layer of complexity to the regulations. Unless there were a simple means for determining which requirements applied to a particular UST system location, it would be more difficult for the regulated community to know how to comply without significant guidance and support from the implementing agency. The absence of such technical assistance could complicate enforcement for the implementing agency. Further, while many states have either already identified or plan to identify areas where their ground water is especially important (many are also expected to designate wellhead protection areas under the new program), only a few have at this point used such classifications for establishing different regulatory requirements for underground storage tanks. States seeking program approval that have established more protective requirements for some tank locations (based on state classes or criteria) would have to demonstrate that these requirements are applied at least as stringently to all tank systems in locations meeting EPA's criteria, and modify their programs if needed. Other states would need to set up mechanisms for identifying where the more protective requirements apply. These added steps in state program development and in EPA approval of state programs would delay or make program implementation less certain.

While the class approach was considered very attractive, it was not the Agency's selected option in today's proposal due largely to concerns about difficulty of implementation. Because of the substantial interest that has been expressed in this approach, however, the Agency is especially interested in receiving comments about the feasibility of the class option, and is soliciting comments, in particular, on a specific approach for implementing the class option that is discussed in detail in Section V.E. below.

Conclusion

Because of the large number of facilities subject to these regulations, the success of the UST program depends on a high level of voluntary compliance and an effective program implementation at a state or local level of government. For these reasons, the Agency was influenced by a desire to create a program that would protect human

health and the environment as a direct result of the program's being (1) implemented and enforced by state and local governments, and (2) readily accepted and understood by the regulated community as building on acceptable current practices. Upon considering the options for new petroleum UST systems, the Agency has concluded that the requirement of Corrosion-protected, single-walled tanks and piping with release detection would be protective of human health and the environment, would be compatible with many of the more aggressive state and local programs that have been developed or that are under development, and would be more likely to gain voluntary compliance from larger businesses already moving in that direction and from smaller businesses concerned about initial costs.

The Agency is concerned, however, about the lack of data concerning the effectiveness of various release detection methods. EPA is also particularly interested in receiving comments and information relevant to the above consideration of options for new petroleum UST system standards, including the performance of different types of protected UST systems. Based on comments or information provided during the public comment period, the Agency may, for example, decide to promulgate secondary containment requirements, or the class option, for all new UST systems.

2. Existing Petroleum UST Systems

EPA is today proposing that all existing petroleum UST systems be upgraded to new UST requirements or replaced in 10 years, and that they institute a release detection method phased in within 3 or 5 years depending on the type of UST system. This proposed approach results from consideration of several regulatory options that address four important issues associated with existing petroleum UST systems:

(1) Mandatory upgrading or replacement of substandard UST systems;

(2) Methods of release detection;

(3) Frequency of release detection; and

(4) Phase-in of release detection.

These issues are briefly discussed below.

Issue #1: Mandatory Upgrading or Replacement of Substandard UST Systems

As described earlier in this Preamble, existing UST systems are believed to present the greatest and most immediate threat to human health and the environment. EPA has concluded that future releases can be avoided if existing substandard UST systems are upgraded or replaced before they leak. For example, existing steel UST systems that are unprotected from corrosion can be retrofitted with impressed current protection systems that can substantially curtail or stop the effects of corrosion. Or, an existing tank can be retrofitted with an interior coating that provides an extra layer of protection between the regulated substance stored and the environment. (These technical options are discussed in more detail in Section VI.B. and C.)

Four regulatory options for addressing the issue of mandatory upgrading/replacement of existing unprotected petroleum UST systems were considered during development of today's proposal:

- Rapid upgrading/replacement;
- Gradual upgrading/replacement;
- No upgrading/replacement; and
- A class approach.

These options are discussed in more detail below.

Option 1: Rapid Upgrading or Replacement. This option would require all unprotected substandard UST systems to be upgraded to the new tank standards or replaced rapidly (e.g., within 3 to 5 years). Requiring such changes prior to three years is probably not feasible given the large universe of UST systems subject to today's proposal. For example, none of the most aggressive state or local UST programs have attempted to implement a program as ambitious as that.

In theory, the primary advantage of a rapid replacement option is avoidance of most future releases by requiring the upgrading/replacement of many existing UST systems before they leak. Thus, this approach lowers the risks to human health and the environment by preventing many future releases. Similarly, it could also result in lower and more certain total costs to the regulated community by avoiding the adverse impacts of cleanup costs.

Given the large number of existing unprotected UST systems, the major problem with this approach is that it probably cannot be successfully implemented. For example, all 1.4 million UST systems cannot realistically be retrofitted with release detection methods and cathodic protection within a few years. It is doubtful that enough equipment and qualified installation personnel would become available to perform such an enormous task in a short time. None of the existing state or local UST programs has undertaken this approach. Also, because it requires the most initial costs from the regulated community and provides a short amount of time for accomplishing these changes, this option would have the greatest immediate impact on small businesses.

Option 2: Gradual Upgrading or Replacement. This option would require existing substandard UST systems to be upgraded or replaced more gradually than Option 1 (6 to 12 years). EPA believes that this approach can be implemented for the large number of existing UST systems. An implementable regulatory program helps to ensure that safeguarding of the environment actually takes place. The regulatory impact analysis undertaken in support of today's proposal indicates significant improvements can result during this gradual upgrading replacement period (see Section IX). The primary advantage of this approach, therefore, is that it provides a great deal of environmental benefit in a manner that can realistically be accomplished by the regulated community. Also, this more gradual approach provides more flexibility to state and local UST programs and enables them to establish their own priorities for mandating improvements. Finally, a more gradual phase-in enables small businesses to plan ahead and prepare for making the necessary improvements.

The major disadvantage to this approach is that the additional time allowed for improvements to take place also provides additional time for more releases to occur and more product to be released. However, this problem should be reduced by the much wider use of release detection and the fact that, under today's proposal, release detection requirements are phased-in over a shorter time period for the most risk-prone tank systems. This option correspondingly requires more reliance on corrective action to protect human health and the environment.

Option 3: No Upgrading/Replacement. As noted earlier in Section IV, ongoing trends in industry management practices lead the Agency to believe that many existing UST systems will be voluntarily upgraded or replaced over the next several years. In theory, these trends alone could be relied upon to upgrade and replace all existing UST systems. However, it seems unlikely that a purely voluntary program could guarantee nationwide consistency within a few years for the substantially large and heterogeneous universe of 1.4 million UST systems. Also, the same people who cannot afford voluntary upgrading or replacement will not be able to afford the costs of corrective action should their UST systems leak. Therefore, to protect human health and the

environment, the Agency rejected a totally voluntary strategy for upgrading or replacing existing UST systems.

Option 4: Class Approach. Upgrading or replacement of existing UST systems based on a class approach would require rapid improvement of existing UST systems located in more vulnerable areas and allow a more gradual approach towards improvement in all other areas. As with the class approach for new tank requirements, the major advantage of this approach is that it allows EPA to tailor more closely its requirements to the risks theoretically presented at particular locations. The establishment of easily understandable and readily implementable classes that would be adopted by state and local UST programs, however, is difficult to accomplish. (See Section V.E. for further discussion of the possible basis for a class approach in which the Agency is specifically soliciting public comment today.)

Conclusion. EPA has concluded that many existing substandard UST systems are likely to leak in the future if steps are not taken to upgrade or replace them. The Agency believes that upgrading or replacing this existing universe of predominantly bare steel UST systems will reduce the number of releases that threaten the environment. Because of the large number of UST systems, the Agency has also concluded that it is simply not practicable to mandate that this change take place over a period as short as 3 to 5 years. The more gradual approach being proposed today will protect the environment by allowing the regulated community to plan for and carry out this change efficiently. It will also enable the development and sorting out of the most reliable methods of release detection from among the many that are being offered commercially. It also enables state or local programs to establish priorities for implementing improvements to existing UST systems, which should also lead to more effective protection of the environment.

Issue #2: Methods of Release Detection

As discussed earlier in this Preamble, EPA has concluded that a fundamental goal of any regulatory approach must include the establishment of a reliable means of detecting releases at UST systems, including existing UST systems. The Agency is today proposing to allow existing petroleum UST systems to use the same release detection methods that EPA would allow for new petroleum UST systems. (These release detection methods are discussed in detail in Section VI.) For example, as with new UST systems, the Agency believes that various methods used in the excavation zone can be relied upon at existing UST systems if certain conditions pertaining to the level of background contamination, the network of monitoring wells, type of backfills, and site characteristics are satisfied.

Particularly for petroleum, the Agency presently believes that release detection can be used for the first time at most existing tanks in a way that will significantly reduce the number of releases that go undetected. EPA has identified over 250 devices that are available commercially or being developed to detect releases in UST systems. An important consideration in developing today's proposal was to allow this burgeoning field of release detection technology to continue to develop. However, EPA has very little performance data or field experience concerning most of these methods. Therefore, another important objective was to ensure that only sound and reliable release detection methods are applied. Today's proposed approach to determining what methods of release detection are adequately protective has been guided by these two important considerations.

Issue #3: Frequency of Release Detection

As briefly discussed in the options for new tanks, EPA believes that the more frequently the various methods of release detection are applied, the more likely they are to detect releases. Thus, a continuous monitor or a frequently sampled method is more likely to detect releases when they are still small and more easily corrected than less frequent monitoring. Therefore, the Agency is proposing that release detection methods be used that are sampled frequently to continuously. The Agency has considered the risks posed by less frequent approaches and has concluded that they may not be adequate to protect human health and the environment, particularly with older, less protected existing tank systems.

Infrequent monitoring (for example, every 1 to 3 years) may not be repeated often enough to determine or establish whether a particular result is accurate. In addition, the amount of release that could occur between such infrequent monitoring episodes could be substantial, pose risks to human health and the environment, and require significant and costly cleanups. Given these concerns and the current status of existing tank systems (EPA believes most of them are leak-prone), the Agency has concluded that frequent to continuous monitoring should be required. However, considering the estimated number of existing tanks covered by these regulations (1.4 million), all UST systems cannot realistically be retrofitted within a few years with methods that apply frequent to continuous monitoring. In fact, because these methods have not been applied to date on a widespread basis, the Agency is concerned that not enough equipment and qualified installation personnel would become available over the next several years to perform such a retrofitting task reliably on such a mass scale basis. Also given the unproven nature of much of this equipment, the Agency is concerned that requiring UST owner and operators to use only frequent to continuous monitoring methods could force the selection and installation of unsound methods.

In response to these important practical considerations, the Agency has concluded that it should also allow the use of relatively infrequent tank tightness testing, in conjunction with manual product inventory control techniques on an interim basis, before existing UST systems are required to gradually upgrade or replace to the new UST standards (including frequent to continuous monitoring). Tank tightness testing and inventory controls are the two most widespread and available release detection methods and they have been traditionally used within large segments of the regulated community. However, inventory control must be practiced daily to be used for release detection purposes. On the other hand, because of the high costs and difficulties associated with doing a precision tightness test, this method of detection can only be required on a relatively infrequent basis. Thus, today's approach allows the use of relatively infrequent (every 3 to 5 years) precision tightness testing only if this testing is combined with daily inventory controls and monthly reconciliation practices. This "infrequent" release detection method is allowed at existing UST systems *only* during the 10-year period of gradual upgrading and replacement.

Tank tightness testing and inventory controls both have distinct advantages for existing UST systems, because they do not require retrofitting and operation of permanent equipment by the UST owner and operator. These advantages contrast with the difficulty that numerous small businesses in this regulated community would face if they all had to retrofit and operate (for the first time) frequent to continuous monitoring. Thus, today's proposed approach of infrequent tightness testing and frequent inventory controls allows

them more flexibility during the 10-year interim period as they decide whether to upgrade or replace their UST systems to the new tank standards or to close their systems.

As discussed in more detail in Section VI, however, the Agency is concerned with the reliability of manual inventory controls and believes that tank testing cannot realistically be used for a majority of existing UST systems more frequently than once every 3 to 5 years. Thus, EPA believes that, even with the combined use of these methods, releases from existing UST systems can go undetected. Therefore, EPA is proposing to prohibit the use of *infrequent* tank testing combined with inventory controls as a method of release detection for new or upgraded UST systems. Frequent tank testing with inventory controls will be allowed. Thus, infrequent tank testing and frequent inventory reconciliation is proposed only as an interim measure that responds to the practical problems of program implementation resulting from the attempt to establish release detection at a very large number of existing UST systems within a short timeframe. The Agency is interested in receiving data and comments on this issue, particularly whether retrofitting more frequent release detection systems over a 3–5 year time period would be feasible or appropriate.

Issue #4: Phase-In of Release Detection

Today, EPA is proposing to phase in release detection at existing petroleum UST systems over a 3- to 5-year period. EPA has chosen an approach that would require tanks with the greatest propensity to leak to have release detection in place sooner than others. For example, steel UST systems that are not protected from corrosion would have to be provided with release detection within 3 years, whereas protected UST systems already in the ground would have up to 5 years to add release detection. Because of the large number of existing UST systems to be regulated, the Agency has concluded that the implementation of release detection requirements should be phased in. As a practical matter, the various methods allowed by the proposed rule are not yet widely practiced or readily available on a mass scale basis. The Agency considered three different regulatory options regarding the phase-in of release detection: (1) rapid phase-in (over 1 to 2 years); (2) gradual phase-in (over 3 to 5 years); and (3) a class approach (combination of options 1 and 2 based on location).

A more detailed discussion of some of the methods available for implementing these approaches to the phase-in of release detection is provided in Section VI of this Preamble. Although the Agency recognized the benefits that could result from requiring release detection for existing tanks very quickly, as a practical matter, EPA has concluded that implementation of these requirements will take at least 3 to 5 years. Evaluation of several of the most active state or local UST programs indicates that this timeframe is the minimum necessary. Several industry upgrading programs also are phasing in release detection over a number of years.

Tank owners and operators are required by today's proposed regulation to comply with the release detection requirement within 3 years for tanks without corrosion protection and within 5 years for corrosion protected or noncorrible tanks. Tanks that cannot meet the release detection requirement will be required to close within the same 3 or 5 year period.

As stated previously, EPA has concluded that implementation of release detection will take at least 3 to 5 years to phase in. However, EPA has also concluded that certain types or classes of tanks may pose a more substantial threat to public health and the environment than others, and in some situations, that threat might be imminent. As a result, EPA may require in the final regulations certain types or classes of tanks to comply with release detection requirements prior to the end of either the 3- or 5-year phase in periods proposed today. EPA intends to study this issue further to identify those tanks for which it may require compliance on an accelerated basis. The factors EPA plans to consider in identifying these groups will at a minimum include: tank age; vulnerability of hydrogeology; distance to drinking water wells; and distance to vital ecological systems. EPA solicits comments on the appropriateness of these factors and what additional factors it should consider. EPA also strongly encourages states to set priorities for implementing all of the technical requirements of today's proposed regulation.

EPA rejected requiring the use of inventory controls at all UST systems during the phase-in period because of the difficulty of getting the regulated community to implement such a requirement successfully. Most owners and operators do not conduct inventory controls and various studies have led EPA to suspect that many are not monitoring inventory controls carefully enough for leak detection purposes. Thus, in the absence of a massive training and technical assistance program by EPA, use of this method is proposed to be phased in with the periodic use of tank tightness testing.

EPA also considered using a class approach to phasing in release detection requirements. Under this approach, EPA would phase in release detection at locations deserving extra protection first. This approach, however, encountered the same constraints identified for its use with the other regulatory components discussed earlier. (See Section V.E. for a further discussion of the class approach.)

3. New and Existing Hazardous Substance UST Systems

EPA is proposing secondary containment for all new and upgraded existing hazardous substance UST systems, unless the UST owner and operator can demonstrate by means of a variance that a reliable method of release detection can be applied to a particular protected single-walled tank. Such a variance would be based upon consideration of the tank's contents, the site characteristics in the immediate vicinity of the UST system, and the type of release detection method and design chosen. The Agency considered the same regulatory options for new and existing hazardous substance UST systems that it did for petroleum UST systems. The factors that caused the Agency to select a different approach for hazardous substance UST systems are discussed below.

EPA considered several important differences between petroleum UST systems and hazardous substance UST systems. In general, the Agency has much less information and analysis on all aspects of hazardous substance UST systems than it has on petroleum UST systems. First, and most importantly, the Agency has little information demonstrating that release detection methods are available for detecting releases from new or existing hazardous substance UST systems. Also, very few established industry practices or state and local UST programs appear to explicitly apply to these UST systems. Potential impacts on small businesses are much less of a factor because few small businesses have hazardous substance UST systems, and when they do they typically have only one UST system.

The Agency acknowledges that some hazardous substances are very similar to petroleum and that release detection methods for those substances could

perform equally well in detecting releases. For this reason, the Agency has included a variance provision in the rule. There are many hazardous substances, however, for which these methods would not be reliable. For example, excavation zone liquid monitors cannot be used with hazardous substances that have a specific gravity greater than water because of the likelihood that releases of these substances would not be intercepted by monitoring devices located on the ground-water table. Similarly, vapor monitors would not be effective in detecting substances that are not volatile enough to create detectable gas vapors in the excavation area surrounding the UST system.

As mentioned earlier in the discussion of regulatory options for petroleum UST systems, EPA anticipates that many future releases can be avoided by corrosion protection measures applied to new UST systems and upgraded existing UST systems. However, EPA anticipates that some releases will continue to occur at new protected UST systems or upgraded existing UST systems because of faulty installation, inadequate design and maintenance of corrosion protection, or other unexpected events. Given the current lack of information concerning the availability of reliable release detection methods for hazardous substances, EPA is concerned that these releases could go undetected unless secondary containment equipped with interstitial monitoring is used. However, to provide flexibility, the Agency is proposing the following variance to secondary containment: the long-term use of release detection with corrosion protected single-walled UST systems can be allowed with hazardous substance UST systems if it is demonstrated that the release detection system will be adequately protective of human health and the environment. The demonstration must prove to the implementing agency that the detection method selected complies with the performance standards and the requirements provided in the regulations for the particular hazardous substance stored in that UST system and at that site. The Agency requests comment on whether variances should be granted to more than one owner and operator who petition jointly and have similar tank/substance/release detection characteristics. EPA solicits comment on whether UST system owners and operators would find such a provision useful and whether public notice of such variances would be appropriate.

In the short term, while existing hazardous substance UST systems are being upgraded to the new tank standards (using either secondary containment or protected single-walled UST systems under the variance procedure), EPA has decided to propose the use of other methods of release detection—including tightness testing combined with inventory controls—provided the limitations in the regulations concerning the use of these methods are met. As stated earlier, EPA expects that many hazardous substances have properties that are very similar to petroleum and therefore may be able to make reliable use of the same release detection methods currently available or being developed for petroleum UST systems. EPA believes that this interim allowance of a variety of release detection methods is necessary due to the large universe of tanks that must ultimately be retrofitted or replaced with secondary containment. If reliable release detection or tightness testing is not available or cannot be developed, the owner or operator must—within 3 years if the UST system is bare steel or within 5 years if the UST is protected from corrosion or made out of noncorrodible materials—retrofit or replace with secondary containment and interstitial monitoring to ensure releases are reliably detected and human health and the environment protected.

The Agency also considered the advantages and disadvantages of other regulatory issues considered in developing the proposed regulation of existing petroleum UST systems. The Agency concluded that the regulatory options and approaches being proposed today for existing petroleum UST systems are also appropriate for existing hazardous substance UST systems: (1) gradual mandatory upgrading or replacement of unprotected UST systems; (2) frequent to continuous monitoring, with the interim allowance of inventory controls and tank testing where feasible; and (3) phase-in of release detection over a 3- to 5-year period depending on tank type.

EPA believes the use of the same basic underlying approach to technical tank standards for both petroleum and hazardous substance UST systems will minimize confusion within the regulated community and with the state and local UST programs. It also provides significant flexibility, as discussed earlier, and should therefore foster voluntary compliance and more rapid implementation that should greatly improve protection of human health and the environment.

D. Options Considered for Corrective Action

Today's proposal provides for separate corrective action processes for UST systems that contain petroleum and those that contain hazardous substances. These requirements apply to regulated UST systems (as defined by this rule) and UST systems for which tank technical standards have been deferred by the Agency to a subsequent rulemaking.

The Agency recognizes that this decision to propose separate corrective action requirements for petroleum and hazardous substance UST systems differs from its approach to technical tank standards for which many of the standards are common for both petroleum and hazardous substance USTs. The Agency believes, however, that such a separation is desirable for UST corrective action as a means of avoiding confusion over which procedures must be followed at a particular site. The Agency solicits comments on this approach, however, and any specific proposals for an alternative approach. Specifically, the Agency requests comment on whether the requirements should be integrated into one subpart.

An important goal of the Agency's UST program is to safeguard public and private drinking water supplies as necessary to protect human health. In addition, the Agency believes strongly in the value of protecting the environment through its UST programs, and in addressing the safety concerns (e.g., fire and explosion) that can be associated with regulated substances stored in underground tanks. The corrective action processes and requirements for petroleum and hazardous substance UST systems have been crafted to fulfill these objectives.

As discussed in the following sections, the Agency selected a site-specific approach to the setting of cleanup target levels for corrective action of UST releases. In considering this and the other options for UST corrective action, the Agency started from the following assumptions:

- *Protection of human health and the environment is aided through state and local participation in this program.* A corrective action program that is sufficiently flexible to accommodate many existing (and future) state and local approaches to UST corrective action is critical. This will allow for program and cleanup oversight to occur at the level best suited to the size and diversity of the regulated community,

and the diversity of UST environments nationwide.

• *The corrective action program must accommodate expected changes in the nature of the UST release problem.* In the first five years of the federal program, the Agency expects that the UST corrective action program will be confronted with a growing number of identified release sites. Many of these will be discovered with sizeable releases over a long period of time. As the tank standards are implemented and enforced, however, the later years of the program should see fewer releases and these releases should be detected earlier. The UST corrective action requirements should function well in both stages of the program's lifetime.

• *The corrective action process should be constructed to get quickly to the task of cleaning up a release, although the cleanup itself may take time.* If corrective action measures can be taken quickly that can prevent a release from reaching ground water, or to remove a continuing source of contamination, such action may ultimately reduce the scope of the problem (and possibly even the final remedial cost).

1. UST Systems Containing Petroleum

Today's proposal divides regulatory requirements for petroleum UST corrective action into two stages. The first stage consists of the immediate abatement actions all owners and operators must take in response to a release from a petroleum UST system. The second stage concerns requirements that specify longer-term corrective action measures owners and operators must undertake if the implementing agency determines, on the basis of submitted data, that additional corrective action is required to protect human health and the environment. Review and evaluation of owners' and operators' reports, corrective action plans, and establishment of cleanup requirements are left to the implementing agencies.

In choosing its corrective action approach, EPA was most influenced by the need to develop a program that can be implemented at a state or local level at a very large number of sites with a diversity of environments. The Agency considered using the National Contingency Plan (NCP) (40 CFR 300) process or the process established by current RCRA hazardous waste tank regulations (40 CFR 264.196) to structure the petroleum UST corrective action process. The Agency concluded, however, that implementation of the procedures required by the NCP and RCRA tank regulations would not be appropriate for the very large number and diversity of petroleum UST sites. In addition, the lack of explicit provisions in the NCP and RCRA process for free product removal, a common practice for petroleum UST cleanups, convinced the Agency that a slightly modified process is needed for responding to petroleum UST releases. While the proposed petroleum UST corrective action process differs from those of the NCP and RCRA, the basic structure is the same for all three: control the release source, determine the extent of contamination, determine the extent of remediation required, and take the necessary cleanup actions.

Stage I: Investigation of Releases and Immediate Corrective Action

The first stage of the corrective action process concerns immediate steps to abate imminent safety and health hazards whenever a release from a petroleum UST is indicated or suspected. To comply with these requirements, the petroleum UST owners and operators must: (1) immediately notify the appropriate agency of the possible release; (2) stop the release; (3) address safety hazards from fire or explosion; (4) remove visibly contaminated soil from the immediate area; and (5) investigate to determine the existence and extent of floating free product.

If this investigation detects a free product plume, the owners and operators must submit a report to the implementing agency, unless the implementing agency determines that a report is not required. In all cases, the owner or operator shall initiate the removal of the free product to the maximum extent practicable. This requirement to remove free product to the maximum extent practicable in all cases reflects the following conclusions: (a) free product is a safety hazard if left uncontrolled, (b) free product is a continuing source of potential dissolved ground-water contamination, (c) free product removal is a relatively inexpensive corrective action measure, and (d) free product removal is a common practice today in nearly all UST release cases studied by the Agency.

The owners and operators must also investigate and characterize any plume of dissolved contamination in the ground water and the extent of any remaining soil contamination. The results of this investigation must be reported to the appropriate implementing agency. The implementing agency will use this information as the basis for determining, through a site-specific assessment, if the owners and operators will be required to carry out additional steps of the UST corrective action process.

In the course of the development of an approach to petroleum UST corrective action, the Agency requested and received extensive input from participants in state UST programs. Based on this input, the Agency chose an approach that reflects steps consistently taken by states upon the discovery of a petroleum release regardless of differences in standards and regulations. There was consensus within and outside the Agency on the need for these requirements. Nevertheless, public comment is sought on the following issues:

• Is the definition of free product provided in this proposal adequately precise in the context of the first stage of the proposed corrective action requirements, and, if not, what definition would be more appropriate?

• Should the scope of the corrective action measures required in Stage I (to be implemented for all petroleum releases) be expanded or reduced, and, if so, why?

• Should the requirement to undertake an investigation of the extent of contamination explicitly include ground-water sampling and analysis, and, if so, under what conditions?

• Should the steps required for the investigation of contamination be more explicitly detailed in the regulation (which currently only indicate that such an investigation is required)?

Stage II: Longer-Term Corrective Action Options

The second stage of the proposed corrective action process addresses longer-term corrective actions.[1] If the owners' and operators' investigation of a petroleum UST release indicates that there is dissolved contamination in ground water and remaining subsurface soil contamination, longer-term corrective actions may be required. EPA considered three regulatory options for establishing longer-term cleanup requirements in the corrective action process: (1) national cleanup standards with a variance provision; (2) site-specific standards to match the risk presented; and (3) a predetermined class approach. All three options are currently

[1] The reference to "longer-term corrective actions" considers additional response measures that either take more time to implement and complete than most of the first stage actions (e.g., ground-water removal and treatment), or are more permanent in their duration whether or not they take a long time to implement (e.g., providing alternative drinking water supplies).

in use in some form by various states in their UST programs.

EPA proposes to use the second option, under which a site-specific risk analysis is the basis for setting cleanup requirements for longer-term corrective action. The Agency has selected this option based upon a comparison of the merits of all three options and an evaluation of state program experience. The Agency, however, solicits comments with supporting data (where available) on all three options. The three options are described below.

Option 1—National Cleanup Standards with a Variance Provision. The first option is to base cleanup levels for all sites upon uniform national cleanup standards. Under this approach, owners and operators would be required to clean up soil and ground water contaminated by an UST release until specified health-based standards are met, unless a variance is granted.

Cleanup standards would be national health-based standards. They could include all constituents for which EPA has previously developed health-based standards under other regulatory programs (e.g., Maximum Concentration Limits established under the Safe Drinking Water Act) and others for which there is sufficient data available to develop standards. Alternatively, the use of standards for petroleum releases could be limited to a few indicator chemicals such as benzene, toluene, and xylene. Where health-based standards are unavailable, background concentrations could be used to establish cleanup levels.

A variance procedure would provide a method to adjust national cleanup standards to match site-specific risk and thereby minimize unnecessary cleanup. This procedure could employ the model used in states like Florida where variances can be granted under the following two conditions.

The first type of variance is based on the technical feasibility of achieving the cleanup standards. This variance is granted if UST corrective action measures begin with a cleanup level based on health-based standards, but the cleanup reaches a point at which progress toward the health-based standards is no longer being made. Owners and operators who can demonstrate this condition would be allowed to discontinue remedial measures provided: (1) they can show that the remaining contamination does not pose a substantial present or potential hazard to human health and the environment, and (2) they institute monitoring procedures to ensure that the conditions remain stable or improve.[2] If conditions deteriorate, cleanup measures would be resumed.

A second type of variance is risk-based. It would be granted if the owners and operators can show that there is no exposure pathway or that site-specific conditions, such as existing and potential ground water and/or surface water use, are such that the UST release does not pose a substantial present or potential hazard to human health and the environment. If these conditions are met, cleanup to the specific health-based standards would not be required. (The Agency would provide guidance on the variance procedures to be used.)

The principal advantage of a nationwide numeric standard approach is that it provides some certainty about minimum cleanup levels. Without any site-specific analysis, such minimum cleanup levels may result, however, in excessive cleanup at some sites. For example, requiring cleanup to strict health-based standards may be excessive at a site where ambient conditions already preclude potable use of ground water.

To minimize the extent to which excessive cleanups are conducted under this option, a variance provision is included so that an opportunity to consider site-specific factors is provided. Several state programs take this general approach to corrective action for UST releases. The experience of these programs has been that the variance provisions allowing for exceptions to the standards the states have established for their programs are used very frequently. These variance provisions are used extensively for two reasons. First, environmental conditions at UST release sites vary considerably, and in some instances residual contamination poses little or no hazard to health or the environment. Second, available technologies employed to remove groundwater contamination resulting from UST releases are unable to achieve healthbased standards. To adjust clean up to the levels that available technologies can attain, states have had to grant numerous variances based on the remaining threat to health and the environment presented by site-specific conditions. On the basis of such experience, the Agency has concluded, therefore, that an approach to longer-term UST corrective action based on a national standard with a variance provision is unlikely to be successful in avoiding the necessity for site-specific assessments at many UST release sites. Implementation problems arise as the large number of variance reviews lead to delays in effective general implementation.

The consistency of cleanup that might at first appear to result from a national cleanup standards approach is also reduced by the states' ability to impose standards more stringent than federal requirements. The health-based requirements that several states currently employ vary considerably, and, therefore, some variation from any proposed national standard is expected. In addition, the Agency is concerned that these differences may delay authorization of state programs. Given the large number of petroleum UST systems, the diversity of their settings and the states' knowledge and experience gained through their UST programs, state participation through authorized state programs is crucial.

The Agency is also concerned that the long process of establishing defensible national health-based cleanup standards under Option 1 could delay initiation of cleanup actions under the program. The Agency could use background concentrations as the basis for establishing cleanup levels. The use of background concentrations is also problematic, however, because the site-specific data needed to establish background levels is rarely available for UST release sites. In addition, many UST sites are located in developed areas where background levels are already elevated and may not be suitable cleanup levels sufficient to protect human health and the environment. Thus, determining appropriate background levels also may be time consuming (for example, background levels used in the regulation of hazardous waste land disposal facilities under Subpart F of the RCRA regulations are based on a year of ground-water monitoring data). However, as discussed below for Option 2, it may be possible to start longer-term cleanups (e.g., treatment of ground water with dissolved contamination) at some sites before a cleanup levels is established. This is an approach that some states have chosen to implement at selected UST release sites.

In EPA's view, therefore, the theoretical advantage of Option 1 in ensuring consistent cleanups will in practice not be achieved and, in any case, is outweighed by potential delays associated with the development and implementation of standards, applicable

[2] In those instances where remedial measures implemented initially fail to achieve a health-based standard and remaining contamination still presents a substantial present or potential hazard, the implementing agency likely would reevaluate the choice of remedial measures and require implementation of an alternative that would meet the standard or satisfy the conditions for a variance.

to the large UST regulated community, and the potential for conflict with existing state programs.

Option 2—Site-Specific Standards Based on Risk. The second approach considered by the Agency uses exposure and risk assessment techniques to determine the risk to human health and the environment at each site of an UST release. Under this option, the degree of cleanup sought for contaminated ground water and soil would reflect the site-specific risk presented.

The risk assessment would be based directly on analysis of site-specific conditions and problems posed by the release. Factors to be considered include the quantity of material released; the mobility, persistence and toxicity of the material; the exposure pathways (e.g., drinking water wells); the extent of contamination and its relationship to present and potential ground-water well locations and uses; levels of background contamination; and any relevant standards.

Technology-based decisions would also be possible under Option 2 if: (1) the cleanup level used as the basis for initiating UST corrective action measures is found to be unattainable with current technology; and (2) it is shown that the remaining contamination does not pose a substantial present or potential hazard to human health and the environment; and (3) monitoring procedures are instituted to ensure that the conditions remain stable or improve. Unlike Option 1, there would be no variance because site-specific decisions are made for all sites.

EPA has chosen Option 2 as the preferred approach to setting cleanup levels for longer-term corrective action for petroleum UST systems releases. Option 2 fulfills the statutory requirements to protect human health and the environment, and it would accommodate the variety of approaches taken in existing state corrective action programs. The risk assessment approach can accommodate the wide range of situations likely in UST releases and does not preclude states from employing a variety of approaches for their state UST programs. In addition, by allowing implementing agencies to seek out site-specific cleanup solutions, the use of Option 2 is expected to minimize the overall regulatory impact on small business owners, as well as reducing costs of compliance for all owners and operators.

The principal concern raised about the use of the risk assessment approach is the potential for delay in starting a cleanup until the initial risk assessment is completed. In this corrective action program, however, the Agency has structured the risk assessment option in a manner that should avoid delay. Owners and operators must initiate immediate abatement actions in response to *all* releases. Removal of the source of the release, any free product, and any apparent contaminated soil in the excavation zone is required at all sites before the risk assessment process begins.

Secondly, implementing agencies have the discretion to structure the risk assessment process, and would be provided (in guidance documents accompanying this rule) with risk assessment and site investigation methods, so that the time required to carry out an assessment should not be excessive. They also may require owners and operators to begin cleanup actions during the time the risk assessment is being conducted.

The Agency intends to provide owners and operators and implementing agencies with a variety of tools in the following technical areas:

- Decision-making in the site investigation and corrective action process;
- Risk assessment procedures for petroleum releases;
- Toxicity values for gasoline and gasoline vapor, including information on exposure;
- Facilitating corrective action decision-making in the field;
- The effectiveness and cost of control technologies;
- The treatment of petroleum-contaminated soil, including present regulations, guidelines, and state-of-the-art technologies, and possible future technologies.

The guidance document on risk assessment procedures would be the key element of a streamlined process designed to complete a risk assessment for petroleum releases within a shortened time frame. Though still under development, these procedures are based upon those found in the Superfund Public Health Evaluation Manual but modified for USTs. For example, they will have been adapted to consider only benzene, toluene, and xylene as indicator chemicals for an unleaded gasoline release. In addition, the modified procedures would restrict consideration of risk to exposures through ground water. The manual would provide the necessary data for the toxicity assessment (i.e., toxicity values are already provided).

In EPA's opinion, the site-specific risk assessment process can be streamlined so that it does not delay corrective actions for petroleum UST releases. Accordingly, EPA believes that the site-specific approach to establishing UST corrective action requirements for petroleum releases is preferred because it will accommodate a variety of state approaches to UST regulation and can be tailored to the diverse circumstances surrounding UST releases.

EPA's selection of a risk-based approach does not mean an inability to accommodate some of the features of a class approach where clean up levels are tied to predetermined classes of environments. For example, the Agency would allow UST corrective action programs to recognize well head protection zones established under the Safe Drinking Water Act if the States elect to establish such zones to protect public drinking water wells. An implementing agency should recognize the existence of these zones and should adjust its risk-based clean up level to match the degree of protection established for these zones.

Besides the predetermined class approach utilizing the well head protection zone, the implementing agency should take into account the exposure to the public in finalizing the clean up levels. If a drinking water supply, either public or private, is affected by a release from a regulated UST system, an owner or operator must expect that a health-based standard will be used as a target for clean up of that release, e.g., for gasoline the Agency is considering the proposed maximum contaminant level for benzene of 5 ppb in drinking water as the appropriate surrogate clean up level. Similarly, if the exposure or risk assessment is used to establish a site-specific clean up level, an owner or operator must expect an implementing agency to choose levels that fall within the excess cancer risk range of 10^{-4} to 10^{-7} with a departure point of 10^{-6}. This may mean that the maximum contaminant levels are used as a starting point (and possibly as an end point) for an evaluation of the appropriate clean up level for a drinking water supply. Finally, an owner or operator must expect that environmental concerns (e.g., impact on wetlands, surface waters, etc.) will be considered particularly when present drinking water supplies are not affected.

Option 3—A Predetermined Classes Approach. The third option considered combines the national health-based standard and the site-specific standard approaches. It is based on the use of predetermined classifications of different UST environments, for example, using a classification system based on the use and value of ground water. Alternative approaches for establishing classes are discussed in more detail in V.E. below.

In a ground-water classification system, fragile environments, such as recharge areas for public and private drinking water supply wells, could be classified as "Class A" environments and afforded a high-level of protection by requiring cleanup to specific health-based standards. Similarly, the Agency could incorporate a "Class C" category for areas that require little or no cleanup of releases, such as areas defined as Class III in the EPA ground-water protection strategy. As such, all features of Option 1, described previously, except the risk-based variance, would apply to a release in a Class A environment. An UST release to any environment not classified as Class A or Class C would require corrective action measures sufficient to protect human health and the environment as determined by a site-specific risk assessment. This risk assessment would take the same form as that described in Option 2. An UST release in a Class C environment would receive little or no cleanup beyond Stage I.

In the Agency's view, UST corrective action based on predetermined classes is less workable than a site-specific standard approach. The initial disadvantage is the time required for the implementing agency to develop an appropriate and workable classification system, given the number and diversity of sites and environmental conditions that must be considered. The implementing agency also would have to expend additional time to classify various locations. Although the implementing agency could classify all UST environments in advance or could require owners or operators to begin cleanup actions during the classification process in a manner similar to that described for reducing delay during the risk assessment in Option 2, the necessity to apply classification criteria to the site would interject a step that is not normally required under the site-specific option.

EPA's selection of a risk-based approach does not mean an inability to accommodate some features of a class approach where clean-up levels are tied to predetermined classes of environments. For example, the Agency will allow UST corrective action programs to recognize wellhead protection zones established under the Safe Drinking Water Act, if states elect to establish such zones to protect public drinking water wells. An implementing agency should recognize the existence of these zones and adjust its risk-based clean-up level approach to match the degree of protection established for these zones.

Another disadvantage of Option 3 is that, even after narrowly drawn classes are developed, Class A requirements may not be achievable in some environments with existing technology. The variance procedures described in Option 1 could be employed to modify class-based cleanup requirements if the standards are not attainable. If the variance procedure employed is based on an assessment of the risk to health and environment presented by site-specific conditions, however, it will be the equivalent of the approach suggested in Option 2. Once again, if the variance procedure must be used in a large number of cases, this approach can be expected to result in only nominal reductions in the number of site-specific cleanup decisions.

2. UST Systems Containing Hazardous Substances

Today's proposed corrective action requirements for UST systems containing hazardous substances are similar to those for UST systems containing petroleum with one significant exception. The removal of free product is not part of the Stage I requirements that apply to all releases. As with UST systems containing petroleum, the hazardous substance corrective action requirements are divided into two stages. The first stage consists of the initial abatement actions that all owners and operators must take in response to a release from a hazardous substance UST. The second stage concerns requirements that specify longer-term corrective action measures that owners and operators must undertake if the implementing agency determines that additional corrective action is required. Review and evaluation of owners' and operators' reports and corrective action plans, and establishment of cleanup requirements is left to the implementing agencies.

In choosing its corrective action approach for hazardous substance UST systems, EPA was influenced by: (1) The need to implement a program at a state or local level at a large number of sites with a diversity of environments; (2) the need to develop a program that reflects the greater complexity and diversity of regulated substances in hazardous substance tanks compared to petroleum tanks; and (3) the need to construct a program that is similar to that for petroleum UST systems, but moves more quickly to those steps where owners or operators collect, array, and assess (along with the implementing agency) the information needed to determine the nature, extent, and hazard of the hazardous substance release. An earlier assessment of the release is considered crucial given the relatively greater hazard and technical complexity of a hazardous substance release. It is expected that such assessments will require a greater investment of time and resources to complete than an assessment of a petroleum release.

The requirements being proposed today to establish corrective action requirements for USTs containing hazardous substances are similar to RCRA hazardous waste tank regulations. They are very similar to the petroleum corrective action regulations with one significant exception: The removal of floating free product is not required at every site under Stage 1. Whereas most petroleum products and some chemical products float on the ground water, many other hazardous substances will sink or will be dissolved readily in the ground water. Free product removal plans for hazardous substance releases must, therefore, consider so-called "sinkers" as well as "floaters." Nearly every other aspect of the corrective action process devised for petroleum tank releases would still apply.

As with the petroleum tank corrective action there is a Stage I versus Stage II distinction in the proposed hazardous substance corrective action program. There are several differences in these two programs, however. Under the hazardous substance requirements for example, containment of any visible release applies solely to an above-ground release. A similar Stage I requirement for a petroleum UST release response applies to both above-ground releases and releases to the excavation zone, that is, subsurface soil excavation is required at this point in the process. In contrast, response to a below ground release under the hazardous substance requirements takes place as part of Stage II. Thus, the dividing line between Stage I and Stage II occurs earlier in the hazardous substance release response than in the proposed petroleum release response process. The hazardous substance corrective action requirements resemble the Subtitle C hazardous waste tank requirements that also restrict initial response requirements for removal of visible contamination and require a corrective action for the cleanup of any remaining contamination. As noted, the Agency believes that moving quickly to consider a Stage II response is appropriate for a release from an UST containing hazardous substances as well and, therefore, has followed the RCRA hazardous waste tank approach. Choosing this approach:

- Provides for a response process that recognizes the relatively greater hazards to human health and the environment posed by hazardous substances in comparison to most petroleum substances; and
- Provides for a response process that is consistent for hazardous wastes and hazardous substances released from underground storage tanks.

Stage I: Investigation of Releases and Immediate Corrective Action

The first stage of the hazardous substance corrective action process concerns immediate steps to abate imminent safety and health hazards whenever a release from a hazardous substance UST is indicated or suspected. To comply with these requirements, the UST owner or operator must: 1) immediately notify the appropriate agency of the possible release; 2) stop the release and remove any remaining hazardous substances as necessary to prevent further release and to allow inspection and repair of the tank system; 3) contain any aboveground release and remove visibly contaminated soil from an aboveground release; and 4) investigate to determine the extent of soil and ground-water contamination.

The owner or operator must also investigate and characterize any free product or any plume of dissolved contamination in the ground water and the extent of any soil contamination. The results of this investigation must be reported to the appropriate implementing agency. The implementing agency will use this information as the basis for determining if the owner or operator will be required to carry out additional steps of the corrective action process for USTs containing hazardous substances.

In the course of the development of a corrective action approach for USTs containing hazardous substances, the Agency requested and received extensive input from participants in state UST programs. Based on this input, the Agency chose an approach to release investigation and immediate corrective action measures that reflects steps consistently taken upon the discovery of a hazardous substance release. There was consensus within and outside the Agency on the need for these requirements. Nevertheless, public comment is sought on the following issues:

- Is the definition of free product provided in Section 280.11 of the rule adequately precise and, if not, what definition would be more appropriate, and why?
- Should the scope of the corrective action measures required in response to *all* hazardous substance releases from USTs be expanded or reduced, and, if so, why?
- Should the requirement to undertake an investigation of the extent of contamination explicitly include ground-water sampling and analysis, and, if so, under what conditions?

Stage II: Longer-Term Corrective Action Options

The second stage of the proposed corrective action process for hazardous substance UST systems addresses free product removal and longer-term corrective action. If the investigations conducted under Stage I detect free product, the owner or operator may be required to submit and implement an appropriate plan to remove the free product to the maximum extent practicable. Free product removal is included as a second stage activity for hazardous substance releases from USTs due to the greater technical complexity of investigating the extent of free product, and in removing free product to the maximum extent practicable. If an owner's or operator's investigation of a hazardous substance release from an UST indicates that there is dissolved contamination in ground water or subsurface soil contamination, longer-term corrective actions may be required as determined by the implementing agency and specified in a compliance order. EPA considered three regulatory options for establishing longer-term cleanup requirements in the corrective action process for hazardous substance UST systems: (1) National cleanup standards with a variance provision; (2) site-specific standards based on risk; and (3) a predetermined class approach. All three options are currently in use in some form by various states in their UST programs. For a detailed discussion of these options, readers should refer to the section on "Longer-Term Corrective Action Options" for USTs containing petroleum.

As in the case of corrective action measures for USTs containing petroleum, EPA proposes to use the second option, which uses site-specific standards, as the basis for setting cleanup requirements for longer-term corrective action. The Agency has selected this option based upon a comparison of the merits of all three options and an evaluation of state program experience. The rationale for selection of this approach is the same as described in Section VI.F.2. of this preamble for USTs containing petroleum. The Agency, however, solicits comments with supporting data on all three options.

3. Public Participation in Corrective Action

RCRA section 7004 provides for public participation in the development, revision, implementation, and enforcement of any regulation, guideline, information, or program under RCRA. Although the statute does not specifically require public participation in individual site clean-up decisions, it is EPA's policy to involve the public in decisions of environmental impact. Because the Agency believes that public participation in the formulation of UST corrective action remedies is both useful to selection of the most appropriate actions and consistent with the expectations of the public, EPA is proposing to include public participation requirements in the regulations for petroleum and hazardous substance underground storage tanks. EPA also expects the owner or operator to comply with existing state requirements for public participation. While some specific proposals for public participation applicable to UST corrective action are included in this rulemaking, EPA solicits comments addressing whether existing state administrative procedure requirements would provide adequate opportunities for public involvement in authorized state UST corrective action programs.

The corrective action process for both petroleum and hazardous substance tanks includes initial abatement requirements that are in the nature of emergency response. Because the Agency believes that the nature of the response greatly limits the opportunity for public involvement in this stage, the proposed public participation requirements address the development and implementation of the longer-term corrective action plan (See Sections 280.75 and 280.84).

Specifically, we are proposing to require notice to the public with an opportunity to comment on all Stage II corrective action plans proposed by the UST owners and operators. This provides both an opportunity for meaningful involvement by the public as well as additional perspectives on the problem and proposed solutions for the implementing agency. Beyond this, we are proposing that whenever a decision is made to terminate a corrective action cleanup prior to completion of the entire approved plan (unable to meet specific standards set in the plan) the implementing agency must allow the public an opportunity to comment on the proposed plan revision.

E. Two-Tiered Regulatory Scheme for Petroleum Tanks; Basis for Determining Class

From the outset, it was recognized that leaks from petroleum UST systems located in certain settings—such as where the ground water is an important source of drinking water—presented a greater potential for both human exposure and costly damages than those located where there is more limited or no current use of the ground water. As mentioned in the discussion of options, there was considerable interest in establishing a regulatory scheme that would require more protective requirements for UST systems posing a high risk to human health, such as those located near ground water used for drinking water, than would be required for the general tank universe.

Under this scheme, the general petroleum UST universe would be subject to the requirements presented in today's rule: corrosion-protected, single-walled systems with frequent to continuous monitoring for new tanks; phasing in of release detection systems for existing tanks in 3 to 5 years (with periodic tank tightness testing and inventory controls allowed as one form of release detection during a 10-year interim period); and upgrading of existing tanks to the new tank standards, or replacement with conforming tanks, within 10 years. For the higher risk locations, however, the new tank standards would require all tank systems to be secondarily contained and provided with interstitial release detection between the tank system and the secondary containment barrier. In addition, existing UST systems would be subject to more rapid upgrading to these new tank standards. The requirements for new and upgraded petroleum tanks in the higher risk class would be comparable to the performance standards being proposed today for new and upgraded hazardous substance UST systems, which provide flexibility in the choice of secondary barriers and interstitial monitoring techniques that can be used. (In the following discussion, the requirements that would apply to petroleum UST systems in the higher risk settings will be referred to as "secondary containment and associated requirements.")

To implement such a two-tiered regulatory program, the Agency would need to determine the criteria for locations that would be subject to the more protective requirements. While the class option is not proposed in today's rule, the Agency seeks comment on the general desirability and feasibility of a class approach as well as specific comments on the approach discussed below regarding criteria for identifying the higher risk class and implementation by the states.

The Agency explored many possible ways to define high risk tank settings based on hydrogeologic factors (e.g., depth to ground water, soil properties, and other site-specific conditions) and/or ground-water use in the area (e.g., distance to wells). The principal objective was to develop a class approach that would allow easy determination of which requirements applied to a particular tank location. In addition, the Agency wanted to develop an approach that would be compatible with EPA's Ground-Water Protection Strategy as well as with existing state ground-water classification efforts and anticipated state designation of wellhead protection areas under the new Safe Drinking Water Act Amendments. Because of the clear need for a state role in the class approach, the Agency also needed to consider how appropriate state implementation could be assured. The Agency also considered the American Petroleum Institute's "Recommended Practice for Underground Petroleum Product Storage Systems at Marketing and Distribution Facilities" (#1635, Second Edition, December 1984), which in part recommends secondary containment or equivalent protection for new installations where ground water below the facility is within the cone of influence of municipal water supply wells.

With such considerations as background, the Agency is seeking comment on an approach for implementing a two-tiered regulatory scheme which, while not proposed in today's rule, is still under active consideration. The Agency is attracted to the class concept because it could provide significant additional protection at low incremental cost to valuable ground-water resources that are most vulnerable to damage. For example, the closer tanks are to ground-water wells, the more likely a release will contaminate the well, necessitating well replacement. Based on public comments received and additional information and evaluation developed over the next few months, this approach could be included in the final rule. To foster public consideration and comments on this issue, the basic approach is briefly summarized below, followed by a more detailed discussion of key aspects of the approach.

Summary of the Basic Approach

EPA would establish *minimum* criteria for locations that are subject to the secondary containment and associated requirements based principally on use of the ground water, possibly taking hydrogeologic considerations into account. Each state seeking approval to operate in lieu of the federal program would be required to submit a plan to EPA demonstrating that the secondary containment and associated requirements will apply to all of the locations in the state meeting EPA's criteria. States might be given the choice of three alternative methods for delineating the areas where the more protective requirements would apply: (1) areas meeting EPA's criteria for Class I ground water as defined in EPA's Ground-Water Protection Strategy (1984); (2) wellhead protection areas designated by the state under an EPA-approved program as provided for in the 1986 amendments to the Safe Drinking Water Act; or (3) a state-developed classification scheme as long as it resulted in the more protective requirements being applied at least to the locations meeting EPA's criteria for Class I. (Instead of using Class I criteria as minimum criteria for defining higher risk locations, EPA might choose other criteria, such as a minimum distance around public supply wells, to define these locations.) In states that fail to submit and receive authorization of their UST systems under Section 9004, all UST systems located within a specified distance of all public water supply wells (or wells serving a substantial population as defined in EPA's Ground-Water Protection Strategy) would be required to meet the secondary containment and associated requirements.

The Criteria for High Risk Locations

To provide flexibility to the states and build on continuing efforts to identify ground water needing special protection, the above approach offers alternative ways that states may identify the areas where the secondary containment and associated requirements would apply:

1. States could choose to use EPA's criteria for *Class I ground water*, defined in EPA's Ground-Water Protection Strategy as "ground water that is highly vulnerable to contamination and either an irreplaceable source of drinking water to a substantial population or ecologically vital." Guidelines for classifying ground water under EPA's Strategy, published for public comment in December 1986, further refine this definition and provide a methodology for determining the class of ground

water near a specific source of potential releases to ground water.

Since the Guidelines methodology is designed for site-by-site classification and is based on collection and analysis of information pertinent to a specific source, EPA could develop a simplified method for determining Class I ground water on an area-wide basis. Rather than develop the extensive data needed to show high vulnerability and irreplaceability, states could choose to designate all tank locations within two miles of ground water supplying a substantial population (e.g., more than 2,500 people served by a public water supply). This simplification, the Agency believes, would make it easier for states selecting this alternative method to identify the areas meeting the criteria.

Generally, choosing this alternative would result in the smallest number of areas being designated for the secondary containment and associated requirements. Based on information in EPA's Federal Reporting Data System (FRDS), approximately 15 percent of the public water systems using ground water as a principal source of supply serve a population of over 2,500; however, these systems serve more than 80 percent of the population whose public water systems use ground water. Designated areas where the secondary containment and associated requirements would apply would, based on preliminary estimates, encompass less than 5 percent of the nation's land area.

2. The second alternative states could choose would be to apply the more protective requirements in *wellhead protection areas* designated by the states under an EPA-approved plan as provided for in the 1986 Safe Drinking Water Act (SDWA) amendments. Under this new program, states will be submitting state programs to EPA for designating and developing programs to protect wellhead areas around public water supply wells. Under the SDWA, EPA will publish guidelines for delineating wellhead areas and for state grant approval in June 1987. States are expected to submit grant applications for program development in 1988.

States choosing this alternative would be taking advantage of the new wellhead protection program as a means for providing extra protection from leaking tanks to all public water supply wells. According to FRDS, there are approximately 47,700 public water supply systems using ground water, excluding non-community (e.g., non-residential) and seasonal use (e.g., campground) systems. Preliminary estimates indicate that approximately 10 percent of the land area in the nation would be encompassed by this alternative.

3. States with their own *state ground-water classification systems* could choose to apply the secondary containment and associated requirements in the areas they have identified as needing special protection. A number of states have already developed such classification systems, and nearly all states are developing ground-water protection strategies which include an effort to identify their most important ground-water resources.

For states choosing this alternative, EPA would review the state's plan for using the classification system as a means for implementing the more protective tank program requirements, and approve those state plans which would result in the secondary containment and associated requirements being applied to at least those locations meeting EPA's criteria for Class I (or whatever minimum criteria EPA might choose for defining the more protective class). Since EPA's Class I is a very small and tightly drawn class, it is expected that most states with existing systems for identifying important ground-water resources should meet this requirement.

Private Wells. During the development of the two-tiered regulatory approach described above, the Agency also considered whether secondary containment and associated requirements should also apply to UST systems located near private drinking water wells. These wells are of concern because they number about 13 million and because over 90 percent of all wells contaminated in release incidents are private water supply wells. The Agency believes that fewer than 20 percent of all tanks are close to private or public drinking water wells.

The Agency does not contemplate including them in the high risk class discussed above, however, for several reasons. Private wells are not regulated under Federal statute, and States vary in the degree to which they regulate private wells. The exact location of private wells is often difficult for the UST owner and the implementing agency to determine which set of requirements applied to a particular UST location.

If the Agency did include tanks near private wells in the high risk class, the distance from the tank to these wells may or may not be the same as for public water supply wells, which typically draw larger volumes of water. EPA believes, based on available historical data concerning petroleum releases from UST systems, that in excess of 80 percent of contamination incidents could have been avoided if the distance were 500 feet and that over 90 percent of incidents could have been avoided if a 1,000-foot distance were chosen.

The Agency believes that the risks presented by UST systems in these settings may be adequately addressed by the basic requirements and may not warrant the additional costs to the individual UST owner and to the administering agency that would result from extending the secondary containment and associated requirements to UST systems near private wells. The Agency does, however, seek comment on whether UST systems near private wells should be subject to these requirements if the Agency proceeds with a two-tiered regulatory approach, and, if so, what size of protected area adjacent to private wells would be appropriate. The Agency also seeks comment on how implementation might be achieved given the practical problems described above, as well as on whether the decision to place additional requirements on UST systems located near private wells should be left to the States.

Required Use of Distance to Well Criteria in States Without Approved Plans

Because states vary in the degree to which they have delineated or plan to delineate areas where the ground water needs special protection, EPA's two-tiered approach could include the requirement that the secondary containment and associated requirements would apply in higher risk settings in those states without an approved program under Section 9004. In states that fail to gain program approval, the secondary containment and associated requirements might be required to take effect at any tank system located within a specified distance to a public water supply well or a well supplying a substantial population (Class I). EPA believes that such an automatic federal requirement is essential: (1) To assure that higher risk settings in all states receive a higher degree of protection; and (2) to encourage states to develop and implement their own plans to protect their public water supply wells.

The Agency recognizes that any specified distance selected may under- or over-protect in varying hydrogeologic settings. Therefore, the Agency is seeking comment on what the specified distance to the well should be. The Agency has identified several possible alternatives for the distance to wells that could be specified. The Agency is

also seeking comment on whether such a requirement should apply to all public supply wells or just those supplying a "subtantial population" as that term is used in EPA's ground-water protection strategy for Class I ground-water.

One alternative distance to wells might be to specify a 2-mile radius around public water supply wells. The 2-mile distance is based on an analysis of contaminant plume lengths, distances to surface water, and pumping well capture zones. This statistical analysis was performed for the development of EPA's Ground-Water Classification Guidelines to determine how large an area would need protection from a potential source of ground-water contamination. The 2-mile distance was shown to be protective in more than 90 percent of the situations analyzed. Another possible distance is 1,600 feet from a public water supply well. This distance is based on an analysis of 156 known petroleum UST ground-water contamination incidents. Seven of these incidents threatened municipal well systems with releases from leaking petroleum underground storage tanks. According to this analysis, none of the releases travelled a distance greater than 1,600 feet before being discovered. The 2-mile distance has the advantage of being based on analysis of a broad spectrum of releases in a wide variety of hydrogeologic settings. The 1,600-foot distance is based on known plume lengths only, but has the advantage of representing distances that petroleum products actually travelled before discovery as a result of an UST system release.

The Agency is seeking comment on the appropriateness of these (and other suggested) distances in identifying where the secondary containment and associated requirements will be imposed in states prior to receiving approval of their plans. The Agency also seeks comment on whether and how to establish different automatic distances to wells for varying sizes (e.g., pumping rate, population served) of public water supply wells.

State Implementation Plans

A central ingredient of this two-tiered class approach is the state's development, submission, and EPA approval of a plan for implementing the secondary containment and associated requirements in higher risk settings. EPA would review the plans as part of the state program approval process for the UST program.

Tank owners in states failing to receive approval of a state plan to protect higher risk settings would be subject to the federal secondary containment and associated requirements if they are located within the specified distance to wells established by the EPA regulations.

EPA is also seeking comment on the state plan submission and approval process as a critical element of the overall approach.

VI. ANALYSIS OF TODAY'S PROPOSED RULE

A. Program Scope

1. Applicability

As described previously, today's proposed rulemaking generally applies to all owners and operators of "underground storage tanks" (UST systems) containing "regulated substances." Exclusions from this rulemaking and UST systems for which regulation is deferred are discussed in the following sections. UST systems are defined as any one or combination of tanks (including any attached underground piping) used to contain an accumulation of regulated substances. To be considered "underground," the tank must have at least 10 percent of its volume beneath the surface of the ground, including pipes attached to the tank. Section 9001 of Subtitle I, however, expressly excludes the following:

- Farm and residential tanks having a capacity of no more than 1,100 gallons used for storing motor fuel for non-commercial purposes;
- Tanks storing heating oil for consumptive use on the premises where stored;
- Septic tanks;
- Pipeline facilities (including gathering lines) regulated under the Natural Gas Pipeline Safety Act of 1968 or the Hazardous Liquid Pipeline Safety Act of 1979. Also excluded are intrastate pipeline facilities regulated under state laws comparable to the provisions of these two Acts;
- Surface impoundments, pits, ponds, and lagoons;
- Storm water or wastewater collection systems;
- Flow-through process tanks;
- Liquid traps or associated gathering lines directly related to oil or gas production and gathering operations; and
- Storage tanks situated on or above the floor of underground areas (such as basements, shafts, or tunnels).

"Regulated Substance" is defined in Section 9001 of Subtitle I as: (1) Any substance defined in Section 101(14) of the Comprehensive Environmental Response, Compensation, and Liability Act of 1980, as amended (CERCLA) as a hazardous substance, except substances regulated as hazardous wastes under Subtitle C of the Solid Waste Disposal Act; and (2) petroleum, including crude oil or any fraction thereof, which is liquid at standard conditions of temperature and pressure (60 degrees Fahrenheit and 14.7 pounds per square inch absolute).[3]

Section 9001 of Subtitle I sets forth definitions for other key terms used in RCRA. These include "release," "non-operational storage tank," "owner," "operator," and "person." The Agency previously codified these definitions along with the definition of "regulated substance" (50 FR 28702). They are presented again in today's proposal so that the public does not have to refer to previous Federal Register notices.

Today, the Agency is proposing one regulatory exclusion which is described in Section 2 below. In addition, the Agency is also proposing to defer regulation for certain categories of UST systems because the Agency has insufficient data upon which to fashion appropriate regulations. Deferral of regulation of these tanks is described in Section 3 below. The Agency is also proposing regulatory definitions intended to clarify the terms of the statute. These definitions clarify the universe subject to Subtitle I jurisdiction as well as the statutory exclusions listed above. These definitions are described in Section 4 below.[4] The following

[3] The list of CERCLA hazardous substances is codified at 40 CFR Part 302. This list contains both commercial chemicals and discarded commercial chemical products. The Subtitle I program only covers those hazardous substances that are not hazardous wastes (except for petroleum wastes). This list was amended in a final rule published on September 29, 1986 (51 FR 34534).

The Agency proposes to apply requirements for hazardous substance UST systems to tanks containing a mixture of petroleum and hazardous substances in which hazardous substances comprise the principal components of the mixture. The Agency is interested in commenters' views on the feasibility (especially for a testing method) of using a concentration threshold to determine when such a mixture would be regarded as principally petroleum or principally hazardous substance, and, therefore, subject to the respective requirements. The Agency recognizes that several petroleum products (e.g., gasoline) are themselves comprised of hazardous substance constituents (e.g., benzene, toluene, xylene), but regards these as petroleum to the extent these substances are present in levels normally found in raw or refined petroleum fractions. The Agency requests comments on the frequency of, problems with, and suggested approach to requirements for UST systems containing both a petroleum product and a regulated hazardous substance. The Agency believes that the largest group of such tanks contain waste oil to which hazardous substances have been added (e.g., solvents).

[4] A number of the definitions that the Agency is proposing today have already been presented in a guidance document issued by EPA on April 7, 1986 to assist the regulated community in complying with the Subtitle I notification requirements.

sections describe EPA's reasons for selecting the proposed deferrals, exclusions and definitions and asks for public comment.

2. Exclusion for Tanks Regulated Under Subtitle C

Underground storage tanks that contain a mixture of hazardous wastes (regulated under Subtitle C) and hazardous substances (regulated under Subtitle I) are subject to overlapping jurisdiction of Subtitles C and I. EPA is proposing today to exempt these tanks from Subtitle I regulation. The Agency believes that this is consistent with congressional intent not to have overlapping requirements evidenced by the Subtitle C exclusion within the definition of "regulated substance." Because of the coverage of these tanks by Subtitle C, the exemption of these tanks will not present a risk to human health and the environment.

3. Deferral of Regulation

Today, the Agency is deferring the proposal of certain requirements for the following categories of UST systems: wastewater treatment tanks, sumps, UST systems containing used oil, underground bulk storage tanks, UST systems containing radioactive waste, UST systems containing electrical equipment (e.g., vaulted transformers and buried power cable conduits), and hydraulic lift tanks. For these tanks, EPA is deferring the proposal of the technical standards set forth today in Subparts A, B, C, D, E, H, and I. EPA is proposing, however, that these tanks be subject to the interim prohibition for new tank systems (today proposed to be redesignated Section 280.11) and corrective action requirements as set forth in Subparts F and G.

a. Wastewater Treatment Tanks

Under the definition of "storm water or wastewater collection systems" that is proposed by the Agency today, wastewater tanks in which treatment is designated to occur would not be exempt from regulation under Subtitle I. Wastewater treatment tanks have been exempted from Subtitle C regulation (45 FR 76074). Elementary neutralization tanks are also temporarily exempted from Subtitle C regulation. The Clean Water Act regulates discharges from tanks containing hazardous wastes or hazardous substances into surface waters but does not regulate the tanks themselves. This means that hundreds of thousands of in-ground tanks that hold wastewater at treatment facilities, including publicly owned treatment works, are now subject to UST jurisdiction.

Also subject to UST jurisdiction are thousands of oil/water separators, which exist at nearly every oil refinery in the United States and many other industrial facilities. These devices are primarily used to separate oil from wastewater and can be considered treatment tanks.

The Agency has considered regulating these tanks under today's proposal. EPA believes, however, that the proposed standards may not be appropriate for these tanks. Thus, EPA is proposing to defer regulation of wastewater treatment tanks and similar apparatuses such as oil water separators until special standards for these tanks can be developed. The Agency requests public comment on the appropriateness of applying the requirements being proposed today to these waste water treatment tanks.

b. Sumps

Under the definition of "tank" that the Agency is proposing today, in-ground sumps would be considered UST systems. According to an industry survey of sumps, there is an estimated 500,000 sumps in the oil and gas industry alone. Typically constructed of cement, these range in size from 55 gallons to 2,100 gallons. (Less than 20 percent of the sumps fall in the 1,260–2,100 gallon range and these are associated with oil and gas wells; thus; they are excluded under the definition of liquid traps. The remainder of sumps range from 55 to 1,260 gallons.)

Sumps in the oil and gas industry are primarily installed and maintained for pollution abatement purposes. Their contents are pumped out and returned to production facilities. As a general practice, wells and production battery sites are inspected daily by production company employees.

Sumps have been linked to a number of ground-water contamination cases. The state of California, relying on studies of ground-water contamination incidents in the Santa Clara Valley, has concluded that sumps should be regulated under that state's UST program. Sumps that contain hazardous wastes are regulated under Subtitle C. Under Subtitle C, sumps are defined as "any pit or reservoir that meets the definition of tank and those troughs/trenches connected to it that serve to collect hazardous waste for transport to hazardous waste storage, treatment or disposal facilities." Certain sumps, however, have been excluded from the secondary containment requirements for hazardous waste tanks, namely sumps that serve as part of a secondary containment system to collect or contain releases of hazardous wastes.

EPA is considering regulating sumps containing regulated substances and requiring owners of these devices to meet the Subtitle I technical standards. EPA is uncertain at this time, however, whether the requirements proposed today are appropriate for these devices. Thus, the Agency has decided to defer proposing technical requirements for these devices at this time. The proposed corrective action requirements, however, would apply to these tanks. The Agency solicits comment on whether special standards should apply to sumps containing regulated substances. EPA also solicits information on (1) the number, location, and substances stored in sumps; (2) how they are protected to prevent releases to the environment from occurring; (3) their leak history; and (4) whether the requirements being proposed today would be appropriately applied to sumps. In the absence of comments and information gathered before final regulations indicating that the proposed requirements are not appropriate for sumps, EPA may determine that the requirements proposed today are appropriate for sumps and would then make the final regulations applicable to them.

c. Underground Bulk Storage Tank

The regulations that the Agency is proposing today were developed to address the majority of tanks in the UST universe. Most of the technical regulations apply to relatively small UST systems of less than 20,000 gallon capacity. Tanks of very large capacities, however, are in use and within the jurisdiction of Subtitle I. The large capacity tanks are sometimes referred to as underground bulk storage tanks (UBSTs). UBSTs are generally located at defense facilities and contain primarily petroleum products, such as jet fuels, motor gasolines, aviation gasolines, and fuel oils. However, such tanks are occasionally used to contain other substances. For example, according to California's inventory of UST systems, two tanks were listed as containing butyl acetate with a combined capacity of 200,000 gallons. The inventory also lists 29 tanks containing potassium hydroxide with a total capacity of 1,032,485 gallons for an average capacity of 35,600 gallons. The majority of UBSTs can be grouped into three categories: 20,000 to 50,000 gallon tanks made of steel or fiberglass that are shaped like smaller UST systems (horizontal cylinders); 50,000 to 1,000,000 gallon bulk tanks made of steel or concrete, usually shaped like vertical cylinders; and 2,100,000 to 3,300,000 gallon bulk tanks

made of concrete and shaped like vertical cylinders. The 20,000 to 50,000 gallon horizontal UBSTs are often located on airport flight lines or refueling stations for ground vehicles. The larger vertical UBSTs are used for storage at terminals, other major distribution and supply centers, and for high volume industrial purposes. In addition, the larger vertical UBSTs are fabricated at the storage facility.

While there are no exact inventories of these tanks, it has been estimated that approximately 30,000 tanks with a capacity greater than 20,000 gallons are located at defense facilities of all the services. Approximately 10 to 15 percent of these tanks are expected to have capacities exceeding 2 million gallons.

EPA does not have a complete understanding of the design, construction, fabrication and installation processes associated with these tanks. The Agency is concerned that today's proposed requirements for design and construction, installation and leak detection, in particular, may not be appropriate for these tanks. Comment is sought regarding appropriate practices for design and construction, installation, leak detection and other regulatory concerns regarding these tanks. For example, tightness testing is believed to be an unreliable technology for UBSTs. The "noise," or level of interferences, increases with increasing product volume, so that it becomes progressively more difficult to detect a particular threshold leak rate (e.g., 0.10 gallons per hour). In addition, the concrete-type tanks cannot be overfilled for testing because of the lid design. Also, little is known about the application of external leak detection methods to UBSTs. In theory, these methods should work for these tanks; however, due to the difficulty of establishing appropriate monitoring points, effectiveness of external leak detection devices may be questionable. Inventory control is subject to many of the same interferences that affect tightness testing and may not be a feasible release detection technique in UBSTs as well.

Because of all the above concerns about the applicability or appropriateness of today's proposed standard for UBSTs, EPA is evaluating whether only secondary containment may provide the necessary protection for human health and the environment. However, the Agency does not have sufficient information on the effectiveness or costs associated with secondary containment of UBSTs. Comment is sought on the appropriateness of this approach as well as alternate release detection approaches that would be effective.

Given the factors presented above, EPA is proposing today to defer applicability of today's proposed technical standards to UBSTs. (The proposed corrective action requirements of Subparts G and H, however, would apply to these tanks). For the purpose of this deferral, UBSTs are defined as tanks that are approximately 20,000 gallons or larger (they encompass steel, FRP, and concrete tanks) that are field-fabricated, vertical cylinders, because of their size. The Agency is considering the use of secondary containment for all such tank systems and may require it for UBSTs instead of the standards for USTs proposed today. EPA solicits information on (1) the number, location, and substances stored in such tanks; (2) how they are protected to prevent releases to the environment from occurring; (3) the leak history; and (4) applicability and appropriateness of each of the proposed technical regulations for these tanks. Again, if EPA determines that either the requirements being proposed today or secondary containment are appropriate for these tanks, it will make the final rule applicable to them. Comment is requested on this issue.

d. UST Systems Containing Radioactive Waste and Other Radioactive Materials

UST systems that contain high-level radioactive waste or other radioactive materials, e.g., low-level radioactive cooling waters, that are not regulated under Subtitle C are regulated under Subtitle I because their contents are considered CERCLA hazardous substances. The Department of Energy (DOE), which manages high-level radioactive waste, has established a program for the management of its tanks which includes detailed design, operation, maintenance, detection, monitoring, and recordkeeping procedures as well as corrective actions that must be taken in the event of a release. These tanks typically have a capacity of 1,000,000 gallons and contain a variety of high-level radioactive liquids and precipitates. The newer tanks are constructed of double-walled steel and are encased in 18 to 22 inches of concrete.

All UST systems containing high-level radioactive waste are owned by the DOE. The UST systems are located at facilities at Savannah River, South Carolina, Idaho, and Hanford (Richland), Washington. The facility at Hanford, Washington, is being reviewed under the National Environmental Policy Act for the "Disposal of Hanford Defense High Level, Transuranic and Tank Wastes" (DOE–EIS–0113).

Due to the unique nature of the materials stored in tanks, the special operations required in handling them, and the size of the storage tanks, several of the proposed standards are not applicable to these tanks. The EPA has considered developing a separate set of standards that apply to these tanks only. This may be unnecessary for tanks containing high-level radioactive waste in view of the fact that the DOE already has a program in place that adequately addresses, and sometimes exceeds, the proposed requirements for the average UST system. Thus, EPA is deferring the proposal of technical requirements for tanks containing radioactive materials, including high-level radioactive waste, pending receipt of public comment on the issue of whether tanks should meet the proposed standards or separate standards. (The proposed corrective action requirements of Subparts F and G, however, would apply to these tanks.)

e. UST Systems Containing Electrical Equipment

Under the proposed definition of "tank," large numbers of utility units could qualify as tanks. Buried power cable conduits are an example of such units. In urban areas, high tension power cables are encased in piping that acts as a conduit. The piping is typically constructed of stainless steel and covered with a semastic coating to prevent corrosion. It contains dielectric fluid which is used to keep the electrical cables cool. The pressurized piping system includes one or more reservoirs which are generally located above ground through which the dielectric fluid continuously circulates and is pumped back through the system. Also located in urban areas are transformers for large trunk lines. These transformers are located underground and contain dielectric fluid.

EPA believes that attempts to include these structures in the UST program would be impractical from an administrative point of view. Thus, EPA is proposing to defer application of technical requirements to these units until it can assess the necessity of their regulation. (Today's proposed corrective action requirements in Subparts F and G, however, would apply to these tanks.) The Agency requests comment on whether and to what extent such units should be regulated in the UST program. In addition, to determine the scope of the universe of these units as well as the magnitude of environmental impacts from release incidents EPA

solicits the following information: (1) the number, location, and substances stored in such units; (2) how they are protected to prevent releases to the environment from occurring; (3) the leak history; and (4) applicability and appropriateness of each of the proposed technical regulations for these tanks.

f. Hydraulic Lift Tanks

Under the definition of tank that the Agency is proposing today, reservoirs of fluid used in hydraulic lifts at service stations and similar devices such as lubricating oil reservoirs of elevators would be subject to Subtitle I regulation.

Businesses that are involved in automotive service and repair often use in-ground hydraulic lifts to raise and lower automobiles in order to facilitate service and repair work. These lifts are designed to utilize a compressed air/hydraulic fluid system and hold between 27 and 75 gallons of hydraulic oil, with the average being 42 gallons. It has been estimated that there are between 350,000 and 750,000 underground hydraulic lift tanks in this country. Added to this are hundreds of thousands of lubricating oil reservoirs of elevators that are found in almost every multi-story building in the country.

EPA is proposing today to defer the application of its proposed technical standards to such tanks. (Today's proposed corrective actions requirements under Subparts F and G, however, would apply to these tanks.) The Agency requests comments on whether such units should be regulated, and, if regulated, to what extent. To include these tanks in the UST program could overwhelm the regulatory capacity of EPA and the states and lead to a less successful program in terms of protection of human health and the environment. Based on preliminary data that the Agency has collected concerning hydraulic lift tanks, EPA believes that these tanks pose a minimal risk to the environment. If these tanks leak, the machinery stops working. Leak detection and abatement therefore occurs automatically. Furthermore, most of the UST requirements being proposed today would not be applicable to hydraulic lift tanks. These tanks are pressurized and can only be monitored indirectly, i.e., using vadose zone or ground-water monitoring wells. Thus, monitoring of these tanks would require that wells be drilled through the floors of potentially hundreds of thousands of auto repair shops, multi-story buildings with hydraulic lift operated elevators, and factories that use hydraulically powered equipment. EPA believes that regulation of such tanks represents a cost to the regulatory agencies and the regulated community that bears no relationship to the environmental protection to be gained.

g. UST Systems Containing Used Oil

Because any tank containing petroleum (even if mixed with other substances) is subject to Subtitle I, underground storage tanks that contain used oil are subject to both the jurisdiction of Subtitle C (Section 3014) and Subtitle I.

The Agency is assessing whether the regulations that are proposed today would be appropriate for used oil UST systems. Pending the determination of whether different rules than those being proposed today under Subtitle I are necessary, EPA proposes to defer the application of the proposed technical standards to used oil UST systems. One reason for deferral of used oil under Subtitle I is that EPA has not considered the impact of the proposed regulation on the recycling of used oil in accordance with RCRA Section 3014. However, even if Section 3014 considerations are applicable to Subtitle I regulation, it is unclear what impacts on recycling of used oil the UST regulation would have. Subtitle I would apply to all used oil tanks, whether or not the used oil were stored for eventual recycling or disposal and whether or not the used oil was mixed for other hazardous substances (not a hazardous waste). In addition, there does not appear to be any evidence that Subtitle I regulation would create the "stigma" disincentive to recycling allegedly created by Subtitle C regulation of used oil as a "hazardous waste." Based upon public comment, however, EPA may determine that the technical standards being proposed today are appropriate for used oil tanks, in which case, EPA may apply today's proposed technical standards to used oil in the final rule.

The Agency is soliciting comments on the appropriate regulation of used oil tanks. The Agency requests comments on the following issues:

- Are the petroleum underground storage requirements proposed today appropriate for recycled used oil and/or used oil bound for disposal?
- Do the minor constituents found in used oil (water, metals, etc.) alter the appropriateness of the requirements?
- Is it appropriate to have different standards for relatively smaller tanks, such as those used by used oil generators and burners, than for larger tanks typically used by used oil processors?

4. Definitions

a. Definitions of Terms Used in the Statute

(1) Underground Storage Tanks. *Underground storage tank* is defined in the statute as any one or combination of tanks (including *underground pipes connected thereto*) that is used to contain an accumulation of *regulated substances*. To be considered "underground," the tank must have at least 10 percent of its volume, including the volume of pipes attached to the tank, below ground.

Today's proposal sets forth the following definitions for terms used in the statutory definition of underground storage tank:

(a) *Tank* is a stationary device designed to contain an accumulation of regulated substances and is constructed of non-earthen materials (e.g., concrete, steel, plastic) providing structural support.

The basis of this definition is the definition of tank under Subtitle C of RCRA (40 CFR 260.10). One advantage of borrowing this definition is that it is one with which many members of the regulated community will be familiar. A potential disadvantage of this definition is that it is so broad that literally hundreds of thousands of devices not traditionally regarded as underground storage tanks—but which contain regulated substances for operational or treatment purposes—would be considered tanks. Thus, under the proposed definition, treatment units (such as oil/water separators, traps and interceptors) and equipment and machinery that contain petroleum or other regulated substances for operational purposes (such as vaulted electric transformers and hydraulic lifts) would be subject to regulation. Similarly, underground sumps and drip collection devices could be considered tanks.

EPA has also considered revising the definition of tank to incorporate the concept of storage into the definition to distinguish those tanks which are used to store regulated substances from those tanks which use, treat, or capture regulated substances. The Agency rejected this alternative, however, because it did not have sufficient data on which to base an appropriate definition of "storage" for Subtitle I purposes.

Subsequent to the issuance of the April guidance, a number of people have contacted EPA and have asserted that EPA should revise the definition of "tank" to clarify that devices such as those mentioned above would not be

subject to regulation under Subtitle I. They argued that attempts on the part of EPA to include these structures in the UST program will not only create chaos in the regulated community but will also damage the Agency's ability to administer the UST program.

Many of the people who contacted EPA owned tanks that could be categorized in one or more of the following ways: (1) tanks with a small capacity; (2) tanks that hold small concentrations of a regulated substance; and (3) tanks that store a regulated substance for a short period of time.

Except to the extent the statute applies only where there is an "accumulation of regulated substances," the statutory definition of "underground storage tank" and its exclusions do not provide an exemption for such tanks. Thus, any underground storage tank that contains regulated substances for any period of time, even small amounts, is within the jurisdiction of Subtitle I. However, although there is no legislative history providing a basis for defining "accumulation of regulated substances," as a jurisidictional matter, EPA believes that the statutory language of Section 9001(a) and Section 9003(b) which allows EPA to distinguish on the basis of the size of the tank provides flexibility for EPA to exclude by regulation tanks that accumulate small amounts of regulated substances.

Given the potentially overwhelming UST universe that results from the statutory definitions, EPA must balance several factors to provide maximum protection of human health and the environment. On the one hand, EPA is responsible under Subtitle I to establish a program that minimizes the adverse impact of mismanagement of small quantities of regulated substances stored in UST systems. Even small quantities of some regulated substances may pose serious dangers to human health and the environment. On the other hand, the Agency must focus its limited resources on the most serious potential hazards associated with leaking underground storage tanks.

Various states and localities have different minimum tank size exemptions in their regulations. Several states and localities have selected 1,100 gallons as a minimum tank size. This is apparently patterned after the size exemption in the UST legislation that pertains to "farm or residential tanks of 1,100 gallons or less capacity used for storing motor fuel for noncommercial purposes." Other states/localities, such as Louisiana, Florida, Wisconsin, and Suffolk County in New York, have minimum tank sizes below which a tank is exempt, but these tank size cutoffs vary from 60 to 1,100 gallons.

The Agency has also considered creating a *de minimus* regulatory exclusion for certain categories of tanks, namely (1) small tanks (e.g., less than 110 gallons or less than 500 gallons); (2) tanks that contain a small concentration of regulated substances (e.g., less than 0.1 percent); and (3) tanks that contain regulated substances for a short period of time (e.g., less than 24 hours or less than 48 hours). On the basis of preliminary data indicating that inclusion of smaller tanks (e.g., less than 110 gallons) could jeopardize the effectiveness of its Subtitle I program, the EPA plans, to exclude de minimus quantity tanks in the future. However, today, the EPA is not proposing a regulatory exclusion due to lack of specific information.

EPA solicits comment on the proposed definition of tank. The Agency also solicits comment on the potential categories of regulatory exclusions discussed above as well as data to support such regulatory exclusions. Specifically, the Agency requests data on the following: (1) Amount of substance and residence time the Agency should consider for a regulatory exclusion; (2) supporting data on the level of risk that such tanks pose; (3) the approximate number of such tanks; (4) the types of tanks; (5) whether the requirements being proposed today would be appropriately applied to such tanks; (6) whether such tanks should be exempted on a conditional basis, and what conditions should be met.

(b) *Underground pipes connected thereto* means all underground piping, including valves, elbows, joints, flanges, and flexible connectors attached to a tank system through which regulated substances flow. For the purpose of determining how much piping is connected to any individual UST system, the piping which joins UST systems should be allocated equally among them.

The definition of connected piping addresses two issues: where the connected piping begins, and how the connected piping should be allocated among tanks. To be consistent with the RCRA Subtitle C tank rules, the starting point of the "connected piping" is the point at which the regulated substance is introduced into the system.

Today's proposed definition has been clarified since issuance of the April guidance to expressly indicate that only *underground* piping is included in the definition of an UST.

(c) *Regulated Substance.* (1) Petroleum, including crude oil or any fraction thereof, means crude oil, crude oil fractions, and refined petroleum fractions, including gasoline, kerosene, heating oils, and diesel fuels. The definition of this term was adopted from EPA's interpretation of the term "petroleum" under CERCLA which defines petroleum under Section 101(14) in a manner substantially the same as Subtitle I. Use of this interpretation eliminates any potential inconsistency with CERCLA.

(2) Hazardous substance is any substance defined in Section 101(14) of CERCLA other than any substance regulated as a hazardous waste under Subtitle C of the Solid Waste Disposal Act (RCRA).

(d) A tank is 10 percent or more *beneath the surface of the ground* if its volume (including the volume of its connected underground piping) is 10 percent or more beneath ground surface or otherwise covered with material so that physical inspection is precluded.

This definition reflects the intent of the UST regulations to govern tanks which could leak directly into the ground undetected. Thus, the following types of tanks are included in the UST jurisdiction: tanks that are underground, inground open-top tanks, and tanks that are covered with ground material (for example, to comply with local fire codes).

The April guidance also included tanks which are "10 percent or more below grade" even if not covered by ground material. A tank whose volume is less than 10 percent beneath the surface of the ground and that is below grade but not covered with ground material, such as a tank in a ditch or natural depression, is not included in today's proposal because it is not substantially different from an above ground tank.

The definition of underground storage tank excludes nine types of tanks that would otherwise be subject to UST regulation.

(2) Farm or Residential Motor Fuel Tank Exclusion.

The first group of tanks excluded by the statute is "*farm* or *residential tanks* of 1,100 gallons or less capacity used for storing *motor fuel* for *non-commercial purposes*." The proposal sets forth the following definitions for the key terms of this exemption.

(a) A *farm* tank is a tank located on a tract of land devoted to the production of crops, or raising animals, including fish, and associated residences and improvements. To be exempt from UST jurisdiction, a farm tank must be located on the farm property. "Farm" includes

fish hatcheries, rangeland and nurseries with growing operations.

"Farm" does not include laboratories where animals are raised, land used to grow timber and pesticide aviation operations. Moreover, this definition does not include retail stores or garden centers where the produce of nursery farms is marketed and where plants and related items are purchased.

In developing this definition, EPA has reviewed definitions currently used by other offices within EPA, the Internal Revenue Service, the Department of Agriculture, and the Bureau of the Census. The Agency also reviewed definitions currently used by a number of states. This review has indicated that there is no standard treatment of the term "farm".

EPA considered adopting the definition of farm that is used by the State of California. California defines farms as "a place of agriculture which has annual sales of agricultural products of $1,000 or more." The Agency rejected this definition because of the difficulty of its application. It would require that the economics of each potential "farm" be evaluated before determining whether its small motor fuel tanks fall within the jurisdiction of Subtitle I.

The basic rationale for EPA's interpretation of "farm" is that, because Congress did not indicate, either in the statute or the legislative history what it intended by "farm", the Agency has chosen to interpret farm in the ordinary, every day sense of the word.

(b) *Residential tank* is a tank that is located on property used primarily for dwelling purposes. Thus, under the proposed definitions, a private school storing motor fuel on site for school buses would not be excluded from UST jurisdiction because the primary use of the property is not residential.

It is important to note that Congress has mandated EPA, under Section 9009 of Subtitle I, to study small farm and residential motor fuel tanks (less than 1100 gallons). In November 1987, EPA will present the results of this study to Congress along with the Agency's recommendations on whether such tanks should be regulated.

(c) *Motor fuel* is a petroleum-based fuel used in the operation of an engine that propels a vehicle for transportation of people or cargo. Therefore, motor fuel refers to motor gasoline and diesel fuel used in a vehicle for transportation purposes.

Limitations inherent in this definition raise several issues with respect to which EPA solicits comment. First, this definition includes only gasoline and diesel fuel, not other types of fuel such as gasohol. Second, "motor fuel" is limited to substances stored in the tanks used to power motor vehicles. Another option would be to exclude tanks containing gasoline and diesel fuel even if their contents are not used to run motor vehicles. Under this approach, tanks storing gasoline at emergency generators would be exempt.

(d) *Noncommercial purposes* means not for resale. The exclusion is limited to motor fuel that is not for resale and that is stored on farmland or residential property. Tanks at gas stations located on "residential" or "farm" property as defined above are not excluded because the motor fuel is stored for resale.

(3) Heating Oil Tanks Exclusion. The second group of tanks excluded from UST jurisdiction by statute is tanks used for storing "*heating oil* for *consumptive use on the premises where stored.*" Today's proposal sets forth the following definitions for key terms of this exclusion:

(a) *Heating oil* refers to a type of fuel oil that is one of the eight technical grades of heating oil. These grades are: No. 1, No. 2, No. 4—light, No. 4—heavy, No. 5—light, No. 5—heavy, No. 6, and residual. Heating oil also refers to fuel oil substitutes such as kerosene and diesel when used for heating purposes.

With respect to fuel oil, the lower the grade numbers, the thinner the oil, and the more easily it evaporates. A high number indicates a relatively thick, heavy oil. No. 1 and No. 2 fuel oils are usually used as domestic heating oil and for moderate capacity commercial-industrial burner units. The other grades of fuel oil are used extensively in industrial plants in the production of electric power, space heating, and other purposes. The No. 5, No. 6, and residual fuels are very viscous liquids which typically must be pre-heated prior to burning.

The Agency has considered narrowing this exclusion to include only petroleum products that are one of the eight technical grades of fuel oil. Under this alternative, tanks containing kerosene or diesel used as a substitute for fuel oil would be regulated under Subtitle I although they are almost identical in their chemical makeup to fuel oil nos. 1 and 2. EPA solicits comment on this issue.

(b) *Consumptive use* means burned on the premises. This exclusion would apply to both residential and commercial heating oil tanks whether they are used for space heating or for producing steam to run generators. The heating oil exclusion does not apply to the storage of heating oil for resale, marketing, or distribution. However, "consumptive use" is not intended to be limited to space heating purposes only.

(c) *On the premises where stored* means tanks located on the same property where the stored heating oil is used. Tanks should be excluded as long as the oil is stored anywhere on the same property. "On the premises" is not limited to the building where the heating oil is stored. Thus, centralized heating units using heating oil that serve more than one building on the same property would be excluded.

(4) Septic Tank Exclusion. The third exclusion covers any *"septic tank."* A *septic tank* is defined in today's proposal as a water-tight covered receptacle designed to receive or process, through liquid separation or biological digestion, the sewage discharged from a building sewer. The effluent from such receptacles is distributed for disposal through the soil. Settled solids and scum are pumped out periodically and hauled to a treatment facility for disposal.

This definition of septic tank is based on common engineering usage. The legislative history of the septic tank exclusion indicates that Congress intended this exclusion to apply to all septic tanks, not just residential tanks. In addition, "septic tank" has been interpreted to include other tanks closely related to the septic tank within a septic system, such as a distribution box, dosing tank, and grease trap, which typically are part of a subsurface disposal system.

(5) Pipeline Facilities Exclusion. The fourth exclusion covers "any *pipeline facility (including gathering lines)* regulated under (1) the Natural Gas Pipeline Safety Act of 1968 (49 U.S.C. App. 1671, et seq.), (2) the Hazardous Liquid Pipeline Safety Act of 1979 (49 U.S.C. App. 2001, et seq.), or (3) which is an intrastate pipeline facility regulated under state laws comparable to the provisions of laws referred to above."

Today's proposal defines *pipeline facilities (including gathering lines)* to include new and existing pipe rights-of-way and any equipment, facility, or building used in the transportation of gas (or hazardous liquids, which include petroleum and any other liquid designated by the Secretary of Transportation) or the treatment of gas or designated hazardous liquids during the course of transportation.

The definition of pipeline facilities was adopted from the Natural Gas Pipeline Safety Act of 1968 and the Hazardous Liquid Pipeline Safety Act of 1979. "Pipeline facility" may also include any such facility as defined and regulated under state laws comparable to these two federal statutes. This definition includes sumps, drip tanks,

skimmer pits, lubrication oil collection devices, and any other containers that are directly connected to regulated oil or gas pipelines or gas plants, which qualify as equipment used in the transportation of gas or hazardous liquid or the treatment of gas or hazardous liquids during the course of transportation.

Although many petroleum pipeline facilities are regulated under the Hazardous Liquid Pipeline Safety Act of 1979, and thus excluded from Subtitle I jurisdiction, tanks associated with gathering lines in rural areas are statutorily exempt from Department of Transportation regulations. However, tanks associated with rural pipelines are exempted as "gathering lines" under the liquid trap exclusion discussed below.

(6) Surface Impoundments, Pits, Ponds and Lagoons Exclusion. The fifth exclusion covers any "*surface impoundment*, pit, pond or lagoon." Today's proposal defines a *surface impoundment* as a natural topographic depression, man-made excavation, or diked area formed primarily of earthen materials (although it may be lined with man-made materials) that is designed to hold an accumulation of regulated substances and that is not an injection well. This definition was taken from Subtitle C regulations for hazardous waste management established under RCRA (40 CFR 260.10). Because the statute uses the somewhat specialized Subtitle C terms "surface impoundment, pit, pond, and lagoon" to define this exclusion, it is likely that Congress also intended to borrow the meaning of surface impoundment from Subtitle C. Examples of structures thus excluded from UST jurisdiction are holding, storage, settling, and aeration pits, ponds, and lagoons.

(7) Storm Water or Wastewater Collection Systems Exclusion. The sixth exclusion covers a "storm water or wastewater collection system." Today's proposal defines a *"storm water or wastewater collection system"* as piping, pumps, conduits and any other equipment necessary to collect and transport the flow of surface water runoff resulting from precipitation, or domestic, commercial, and industrial wastewater to and from detention areas or any areas where treatment is designated to occur. The collection of stormwater or wastewater must be directed towards conveyance, and does not include storage or treatment of stormwater or wastewater except where incidental to conveyance.

Tanks that are associated with storm water and wastewater collection systems are exempted under this exclusion if the tanks are not designated for detention or treatment. Tanks where incidental treatment or detention occur are exempt. EPA has included the phrase "incidental treatment or detention" to alleviate potential confusion over whether some of the appurtenances associated with these collection systems could be considered tanks.

Several commenters stated that the phrase "incidental to conveyance" in the April guidance definition was unclear and confusing. The Agency has considered eliminating the phrase "incidental to conveyance" but decided to retain it since it is the intent to exempt from regulation those parts of the collection system where incidental treatment or detention occurs and which are also "incidental to conveyance." The Agency solicits public comment on this issue and specifically requests examples of all parts of the collection system that would be exempted. This list could be included in the final rule to provide clarification. To date, the Agency defines devices that are part of the collection system such as weirs, manholes, catch basins, ejector stations, wet wells, and dry wells as examples of structures where treatment or detention is incidental to conveyance. Included in this category are accommodations made in certain collection systems to temporarily detain peak flows until capacity is available for the treatment facility.

One commenter on the April guidance suggested that collection system be defined as the "complete path of the water flow from its first entry into a drain or trench until it is discharged." EPA believes this definition is too broad and includes structures and equipment that are not typically included in an engineering definition of "collection system."

Treatment incidental to conveyance means there is not retention time for the purpose of treatment *and* the tank/pipes subsequently empty into a collection system. Acid neutralization tanks and oil/water separators are considered forms of treatment not incidental to conveyance if the liquid is retained for treatment. Therefore, they are not excluded.

(8) Flow Through Process Tank Exclusion. The seventh exclusion covers any *"flow-through process tank."* Today's proposal defines a *flow-through process tank* as a tank that forms an integral part of an industrial or commercial process through which there is a steady or uninterrupted flow of materials during the operation of the process. The term "flow-through process tank" does not include tanks used to store regulated substances prior to their introduction into the industrial or commercial process, or to store regulated substances as intermediates, byproducts or finished products of the process.

Today's proposed definition differs from the April guidance in that it no longer limits the exclusion to manufacturing process tanks but extends the exclusion to any tank that forms an integral part of an industrial or commercial process.

The proposed definition reflects concerns from several commenters that a process designed to be steady will have some interruptions and pauses due to periodic maintenance or emergency shutdowns. Thus, our proposed definition of "flow-through" clarifies that flow must be "steady" only during the operation of the process. However, if a flow-through tank regularly stores regulated substances during periods of interruption, it is a storage and not a flow-through process tank.

In developing this definition, consideration was given to changing the term "uninterrupted" to "recurring." Some commenters on the April guidance were concerned that the term "uninterrupted" was too restrictive because some processes will have starting and stopping points, such as a batch process; therefore, some of the tanks in the process would be excluded and others would be regulated. EPA rejected including the term "recurring" in today's definition because it is unclear as to what the effect would be and it could be interpreted to eliminate jurisdiction over any UST systems with periodic input and outflow, including UST systems located at gasoline filling stations. The Agency solicits public comment on this issue.

Because EPA does not have sufficient information on the scope of the exemption if revised by the suggested wording changes, the Agency requests factual information, particularly process diagrams, indicating what tanks should be excluded as "flow-through" process tanks given the nature of the specific process and function of the tank. EPA may further refine this definition, based on public comment on specific processes, and is considering including a final definition examples of specific tanks which are "flow-through process tanks."

An issue raised by this definition concerns the meaning of "integral part of the process." EPA interprets this phase to mean that the process could not be operated without the flow-through process tank. Several commenters on the April guidance have asserted that some tanks store

intermediates that are integral to a process and should be included in the definition of a flow-through process tank. Such tanks, it has been argued, are a necessary aspect of a process in order for that process to be conducted safely and to allow for an adequate supply of raw materials to be used for batch operated processes. EPA believes that, because these tanks are intermediate storage tanks, they are not exempt. The Agency solicits further comments on this and on whether "integral part" would include governmentally-required wastewater treatment flow-through tanks that are a necessary part of an industrial or commercial operation.

(9) Liquid Traps or Gathering Lines Related to Oil or Gas Production and Gathering Operations. The eighth exclusion covers *"liquid trap* or associated *gathering lines* directly related to oil or gas production and gathering operations." In today's proposal the oil and gas production *liquid trap* exclusion refers to sumps, well cellars, and other traps used in association with oil and gas production, gathering, and extraction operations (including gas process plants), for the purpose of collecting oil, water, and other liquids. Such liquid traps may temporarily collect liquids for subsequent disposition or reinjection into a production or pipeline stream, or may collect and separate liquids from a gas stream.

Although liquid traps are often used in activities other than oil and gas production, the only type of liquid trap excluded from UST jurisdiction under the statute is a liquid trap used for the purpose of separating unused oil and gas liquids from water at oil and gas production facilities. Liquid traps used in conjunction with landfill methane gas production facilities are within this exclusion and would not be subject to UST jurisdiction. Liquid traps such as grease and oil traps at gas stations, however, are not within this exclusion.

Today's proposal defines *gathering lines* as any pipeline, or associated equipment used in the transportation of oil or gas during oil or gas production or gathering operations.

(10) Underground Areas Exclusion. The ninth exclusion covers "storage tanks situated in an *underground area* (such as a basement, cellar, mine working, drift, shaft, or tunnel) if the storage tank is situated upon or above the surface of the floor." In today's proposal, this exclusion applies to "underground rooms" where tanks are located on or above the floor surface. The purpose of this exclusion is to remove from UST jurisdiction tanks that are technically underground but that are, in a practical sense, no different from above ground tanks. They are situated so that, to the same extent as tanks above ground, physical inspection for leakage is possible. Thus, the requirements to be able to physically inspect the tank for leakage is consistent with the purpose of this exclusion.

Tanks located in a below grade structural vault, cellar, basement, mine or other underground room would be subject to the proposed UST exclusion if the tank sits on or above the surface of the floor and there is sufficient space to enable physical inspection of the tank, but not necessarily the tank bottom.

An issue presented by this definition is that such tanks would *not* be subject to corrosive forces because their components are not placed in direct contact with the surrounding soil. Therefore, they would be less likely to have a release. This would mean that the ability to "physically inspect the tank" may be irrelevant. The Agency has considered revising this definition to include only "underground tanks situated in a room that is part of a larger structure or building." EPA requests comments on this issue.

EPA expects that many new storage tank systems will be placed in underground containment vaults or to aboveground locations as a result of today's rules, once they are finalized. This could result in an increase in volatile emissions to the air because the product stored will be subject to higher temperature conditions that promotes emissions through vent pipes. EPA solicits comments on the need in the future for control measures to reduce the impacts of such developments.

b. Definition of Terms Used in the Regulations

In addition to proposing terms that clarify the statutory definitions contained in Subtitle I, the Agency is proposing to add in 40 CFR Part 280 the following definitions of terms used in today's proposal.

(1) Aboveground Release. Aboveground release means any release to the surface of the land or to surface water. This includes, but is not limited to, releases from the aboveground portion of an underground storage tank system and releases associated with overfills and transfer operations as the petroleum moves to or from an underground storage tank system.

(2) Ancillary Equipment. "Ancillary equipment" means any device including, but not limited to, such devices as fittings, flanges, valves, and pumps, that are used to distribute, meter, or control the flow of petroleum or hazardous substances to and from an underground storage tank.

(3) Below Ground Release. Below ground release means any release to the subsurface of the land and to ground water. This includes, but is not limited to, releases from the below ground portions of an underground storage tank system and releases associated with overfills and transfer operations as the petroleum moves to or from an underground storage tank.

(4) Cathodic Protection. Cathodic protection is a technique to prevent corrosion of a metal surface by making that surface the cathode of an electrochemical cell. A tank can be cathodically protected through the application of either galvanic anodes or impressed current.

(5) Compatible. Two or more substances are compatible if they are able to maintain their respective physical and chemical properties upon contact with one another for extended periods of time and under varied environmental conditions (e.g., temperature).

(6) Corrosion Expert. Corrosion expert means a person who, by reason of his/her knowledge of the physical sciences and the principles of engineering and mathematics, acquired by a professional education and related practical experience, is qualified to engage in the practice of corrosion control on buried or submerged metal piping systems and metal tanks. Such a person must be certified as being qualified by the National Association of Corrosion Engineers (NACE) or be a registered professional engineer who has certification or licensing that includes education and experience in corrosion control of buried or submerged metal piping systems and metal tanks.

(7) Electrical Equipment. Electrical equipment means underground equipment which contains dielectric fluid which is necessary for the operation of equipment such as transformers and buried electrical cable.

(8) Excavation Area. Excavation area is defined as the volume containing the tank system and backfill material as bounded by the ground surface and walls and floor of the pit and trenches into which the tank system is placed at the time of installation.

(9) Existing Tank System. "Existing tank system" means a tank system used to contain an accumulation of regulated substance or for which installation has commenced on or prior to the effective date of this regulation. Installation will be considered to have commenced if the owner or operator has obtained all federal, state, and local approvals, or

permits necessary to begin physical construction of the site or installation of the tank system, and if either (1) a continuous onsite physical construction or installation program has begun, or (2) the owner or operator has entered into contractual obligations—which cannot be cancelled or modified without substantial loss—for physical construction at the site or installation of the tank system to be completed within a reasonable time.

(10) Free Product. Free product refers to regulated substance in the non-aqueous phase (e.g., liquid not dissolved in water) that is beneath the surface of the ground.

(11) Hazardous Substance Tank System. Hazardous substance tank system means an underground storage tank system that contains an accumulation of hazardous substance or a mixture of petroleum and hazardous substances in which hazardous substances comprise greater than 50 percent of the weight or volume of the mixture.

(12) Hydraulic Lift Tanks. Hydraulic lift tank means a tank holding hydraulic fluid for a closed-loop mechanical system that uses compressed air and hydraulic fluid to operate lifts, elevators, and other similar devices.

(13) Implementing Agency. Implementing agency means EPA, or in the case of a state with a program approved under Section 9004, the designated state or local agency responsible for carrying out an approved underground storage tank program.

(14) Interstitial Monitoring. Interstitial monitoring is a leak detection method which entails surveillance of the space between an UST system walls and the secondary containment system for a change in steady state conditions. In a double-walled tank, this change may be indicated by a loss of vacuum, a drop in pressure, a drop in the fluid level in a visible reservoir, or the detection of the regulated substance in the interstitial space. In a secondary containment system consisting of a liner (natural or synthetic), bentonite-sealed soils, or a vault, the surveillance consists of frequent to continuous sampling from a monitoring well between the UST and the liner to detect the presence of substance in the well(s).

(15) Inventory Controls. Inventory controls are techniques used to identify a release of regulated substances that are based on tank liquid level measurements and reconciliation of those measurements with product delivery and withdrawal records.

(16) Liquid Trap. "Liquid trap" means sumps, well cellars, and other traps used in association with oil and gas production, gathering, and extraction operations (including gas production plants), for the purpose of collecting oil, water, and other liquids. Such liquid traps may temporarily collect liquids for subsequent disposition or reinjection into a production or pipeline stream, or may collect and separate liquids from a gas stream.

(17) New Tank System. "New Tank System" means a tank system that will be used to contain an accumulation of regulated substance and for which installation has commenced after the effective date of this regulation. Installation will be considered to have commenced if the owner or operator has obtained all federal, state and local approvals, or permits necessary to begin physical construction of the site or installation of the tank, and if either (1) a continuous onsite physical construction or installation program has begun, or (2) the owner or operator has entered into contractual obligations—which cannot be cancelled or modified without substantial loss—for physical construction at the site or installation of the tank system to be completed within a reasonable time.

(18) Operational Life. Operational life refers to the period beginning when installation of the tank system has commenced until the time the tank system is properly closed under Section 280.80.

(19) Overfill Release. An overfill release refers to a release that occurs when a tank is filled beyond its capacity, resulting in a discharge of the regulated substance to the environment.

(20) Petroleum Tank System. Petroleum tank system means an underground storage tank system that contains an accumulation of petroleum or a mixture of petroleum and hazardous substances in which petroleum comprises greater than 50% of the weight or volume of the mixture.

(21) Positive Sampling, Test, or Monitoring Results. Positive sampling, test, or monitoring results refer to the results of sampling, testing, or monitoring using a method described in Subpart D that indicate that a release from an UST system has occurred.

(22) Release Detection. Release detection means determining whether a release of a regulated substance has occurred from the UST system into the environment or into the interstitial area between the UST system and a secondary barrier around it.

(23) Secondary Containment. Secondary containment refers to a system installed around an UST that is designed to prevent a release from migrating beyond the secondary containment system outer wall (in the case of a double-walled tank system) or excavation area (in the case of a liner or vault system) before the release can be detected. Such a system may include, but is not limited to, impervious liners (both natural and synthetic), double walls, vaults, or impervious soil treatments such as bentonite-sealed soils.

(24) Sump. Sump means any pit or reservoir that meets the definition of tank, including troughs or trenches connected to it, that serves to temporarily collect regulated substances.

(25) Tightness Testing. Tightness testing means a procedure for testing the ability of a tank system to prevent inadvertent release of any stored substance into the environment (or, in the case of an UST system, intrusion of ground water into a tank system).

(26) Underground Release. Underground release means any below ground release.

(27) Unsaturated Zone. The unsaturated zone refers to the subsurface zone containing water under pressure less than that of the atmosphere, including water held by capillary forces within the soil and containing air or gases generally under atmospheric pressure. This zone is limited above by the ground surface and below by the upper surface of the zone of saturation (i.e., the water table).

(28) "UST System" or "Tank System". "UST System" or "Tank System" means an underground storage tank, connected underground piping, other ancillary equipment, and containment system, if any.

(29) Wastewater Treatment Tank. Wastewater treatment tank means a tank that is part of a wastewater treatment facility regulated under either Section 402 or 307(b) of the Clean Water Act, and which receives and treats or stores an influent wastewater which contains regulated substances.

B. Design, Installation, and Notification Requirements

The following sections describe general requirements applicable to all new UST systems storing petroleum or hazardous substances. These requirements also apply to existing UST systems which must be upgraded to meet new UST standards according to the schedule described in Section 2 below.

1. Performance Standards for New UST Systems

a. Design and Construction (Section 280.20 (a) and (b))

Overview. Proper tank system design and construction must not only ensure structural integrity of the tank system at the time of installation, but also throughout the period of its intended use. Proper design and construction encompasses not only the design and fabrication of the tanks and piping themselves, but also ancillary design features, systems, or equipment that enhance or protect the structural integrity of the tank system.

There is concern that, in the absence of adherence to proper standards, tank systems might be inadequately designed or built with inferior materials, thereby resulting in structural failures. Lack of adherence to fabrication standards might also lead to failures from burst seams and couplings, cracked walls, or poor welds. There are very few reported incidents of releases resulting from design or construction failures, and the Agency attributes this low failure rate to widespread voluntary adherence to existing codes and practices. Today's proposal will ensure that these voluntary practices are followed nationwide.

Corrosion is the major cause of releases from the existing UST population. Steel tank systems unprotected from corrosion presently are in widespread use and corrode easily in many soil conditions. EPA's Local Release Incidents Study reported that corrosion of bare steel tank systems was by far the major cause of releases from existing UST systems, roughly 60 percent. Corrosion cells are created across different areas of the tank system, especially vertically as soil moisture and other characteristics vary with depth, and between dissimilar metals. Similar metals that have been in the ground for different periods of time also can establish a corrosion cell. Because of these recognized problems, corrosion protection must be addressed as part of the design and construction of the tank system.

Today's proposal (Section 280.20) requires that new UST systems be designed and constructed in a manner that will prevent releases due to structural failure and corrosion for as long as they are used to store regulated substances. Improper installation is the other major cause of releases from both unprotected and protected tank systems (including FRP) and is intimately connected to ensuring that the structural design of the tank system maintains its integrity. The Agency's proposed approach toward proper installation is addressed in the next section of the Preamble (Section VI.B.1.b.).

Current Practices. Today's proposal is the result of a careful evaluation of the current design and construction requirements embodied in the Interim Prohibition. The Agency specifically questioned whether to make the requirement more stringent. The sections that follow describe various existing practices and regulatory programs aimed at ensuring structural integrity of tank systems through proper design and construction.

(1) National Consensus Codes of Practice. Several professional and scientific organizations have established standards and codes that relate to design and construction of underground tank systems, piping, and ancillary equipment. These include the National Fire Protection Association (NFPA), the Steel Tank Institute (STI), Underwriters Laboratories (UL), National Standards Institute (NSI), the National Association of Corrosion Engineers (NACE), the American Society of Testing and Materials (ASTM), the Western Fire Chiefs Association (WFCA), the Occupational Safety and Health Association (OSHA), the Petroleum Equipment Institute (PEI), the American Petroleum Institute (API). Some additional codes developed by similar organizations in Canada have been adopted by some of the northern states, including standards published by Underwriters Laboratories of Canada (ULC).

Collectively, these organizations have published more than twenty guides, codes and standards relating to the design and construction of tanks, pipes and UST-related systems. Generally, these publications are written by committees of knowledgeable and experienced professionals and are subjected to independent peer review. These guides, codes, and standards are widely recognized as unbiased and independent. Because they represent consensus positions, these publications have become standards which are closely followed in many segments of the industry. Frequently, these codes are adopted by state and local governments in their UST regulations and ordinances.

Some of the most important existing codes follow:

- ASTM D4021–86 provides detailed specifications for fabricating and testing FRP tanks;
- UL 58 describes in detail the standards for fabrication and assembly of steel tanks and the required tests for leakage;
- UL 1316 provides requirements for the construction, performance, manufacture, testing, and installation of FRP tanks;
- "Specification for sti-P3 systems of External Corrosion Protection of Underground Steel Storage Tanks," 1987 addresses the design and fabrication of coated and cathodically protected steel underground storage tanks;
- ULC–S603–M1981 addresses assembly of tank systems comprehensively, design standards, and testing guidelines for horizontal cylindrical steel tanks;
- ULC–S603–M1982 provides guidance on construction requirements, external corrosion protection, installation and maintenance;
- ASTM—"Steel Piping, Tubing and Fittings" details more than 130 standards on the design and fabrication of steel pipe;
- NFPA 30 addresses tank systems comprehensively from a fire explosion perspective. It references the above codes and sets performance standards.

(2) State and Local Regulations. An EPA review of state UST programs identified 14 states that already have UST regulations. Many more regulate UST systems through existing fire codes. Some have promulgated design specifications covering materials, welding, fabrication, and assembly; however, these states are in the minority. Most states adhere to programs that are based on one or more consensus codes. They have accepted strict adherence to these codes as an assurance of the tank system's integrity for its operational life. For example, the Florida UST program requires design, construction, and installation to be in accordance with NFPA 30, Chapters 2–1 and 2–3; API 1615, Chapters 3(3) and 3(4); and UL 58 or UL 1316.

(3) Underground Tanks Storing Hazardous Waste. The Hazardous Waste Tank Regulations promulgated on July 14, 1986, established the following performance standard: owners and operators of new tank systems or components must ensure that the foundation, structural support, seams, connections, and pressure controls (if applicable) are adequately designed and that the tank system has sufficient structural strength, compatibility with the waste(s) to be stored or treated, and corrosion protection so that it will not collapse, rupture, or fail. The owner and operator must obtain a written assessment—reviewed and certified by an independent, qualified, registered professional engineer—attesting that the system has sufficient structural integrity and is acceptable for the storing and treating of hazardous waste. In addition, a corrosion expert must determine the

factors affecting the design and operation of a cathodic protection system. All these components are submitted by the owner and operator in a permit application to EPA or the authorized state.

(4) Interim Prohibition. Subtitle I, Section 9003 (g) of RCRA prohibits installation of an underground storage tank system for the purpose of storing regulated substances unless the tank: (1) will prevent releases due to corrosion or structural failure for the operational life of the tank system, (2) is corrosion protected in one of several ways, and (3) is compatible with the substance stored. The prohibition allows for variance from corrosion protection if soil resistivity is greater than 12,000 ohm-centimeters.

Today's Proposal. (1) *Design and Construction Requirements.* EPA has reviewed data on tank system failures to determine if the design and construction requirements of the Interim Prohibition are adequate. We have concluded that more stringent design and construction requirements are needed, especially with regard to corrosion protection.

Two general approaches to design and construction standards were considered by EPA: detailed design standards or general performance standards. Detailed design standards would specify the proper design and construction of tank systems. Such design standards could be included in the regulation explicitly or the standard could reference existing codes and standards. EPA has reservations about this approach for several reasons.

First, the design and construction of tank systems will change over time and continued advances in tank system material and fabrication technologies are expected. If EPA promulgated detailed design standards, it would have to continually revise and update them to reflect these changes in technology. Second, to keep up with these changes, EPA would have to closely monitor advances in tank design and construction technology to enable updating the design standards. EPA does not believe that it needs to duplicate the existing infrastructure of industry consensus codemaking. Third, detailed design standards that were under continued development would result in conflicts with the many state UST programs, as well as complicate the approval process for state programs.

The use of design standards might be justified if there were no industry consensus with respect to tank design. While a specific design standard provides clear guidance to the regulated community on the design and construction of tank systems, EPA has determined that the standards developed by industry consensus are already providing adequate protection of human health and the environment.

The general performance standard approach that EPA is proposing today for tank and piping design and construction in Section 280.20 (a) and (b) is intended to build upon the Interim Prohibition by requiring that the tank and piping be designed and constructed in accordance with consensus codes and accepted practices. The industry consensus codes are, in fact, being followed for many of the new installations now.

Today's proposed rule requires that each tank be properly designed, constructed and protected from corrosion in accordance with a code of practice developed by a nationally recognized association or independent testing laboratory. Nationally recognized is defined to mean a group or organization that is composed of a national membership that is representative of its members' views concerning tank design and construction or corrosion protection.

Generally, to have achieved nationally recognized status the association will have been in existence for a reasonable period of time, and will have been active in promulgating standards that are in widespread use, and will have been active in research and in the scientific and regulatory debate of issues relating to its areas of interest. The Steel Tank Institute is an example of a nationally recognized association because it has been cooperating with other industries, organizations and government bodies in the development of reliable tank standards since 1916.

Table 2 of this preamble lists a number of codes that have been tested through widespread and lengthy use. In this manner, the codes have become established as surrogate regulations. The Agency considers all the organizations listed in this table as meeting the definition of nationally recognized associations or independent testing laboratories. The Agency invites comment on the methods that should be used to recognize additional codes that meet the intent of the requirement of today's proposed rule that each tank be properly designed, constructed and protected from corrosion in accordance with a code of practice developed by a nationally recognized association or independent testing laboratory.

A number of these codes and standards are listed in today's proposal as guidance in meeting this general performance standard. These codes are referenced in notes and the use of these particular codes is not part of today's proposed requirements. The owners and operators may rely on any other applicable codes and standards. The codes are referenced only to provide examples of codes that meet this general performance standard.

(2) Tank Requirements (Section 280.20(a)). Today's proposal is more stringent than the requirement for corrosion protection in the Interim Prohibition because it requires all new steel tanks to be protected from corrosion by either using both corrosion-resistant coatings and cathodic protection or by being made of composite construction. The Interim Prohibition allows either coatings or cathodic protection.

Today's proposal allows three tank fabrication techniques: fiberglass-reinforced plastic; coated and cathodically protected steel; and steel and fiberglass-reinforced plastic composite. The Agency believes that these three types of tanks will perform adequately if they are designed and constructed in accordance with nationally recognized association or independent testing laboratory codes of practice. In addition, other tank design, construction or corrosion protection techniques are allowed in today's proposal if the implementing agency determines the technique is no less protective of human health and the environment. The Agency has included this provision to allow the development and use of new technologies and to allow design variations for specific site conditions.

These codes of practice are recommended for guidance in the design and construction of fiberglass-reinforced plastic (FRP) tanks in proposed Section 280.20(a)(1). Other codes may also be applicable, but the Agency believes that tanks built in accordance with the American Society of Testing and Materials, Underwriters Laboratories, or Underwriters Laboratories of Canada standards will minimize releases during their intended period of use.

The second type of tank (proposed in Section 280.20(a)(2)(i)) is the coated and cathodically protected steel tank. This type of tank is in wide use and is reported to have very high reliability.

Coatings isolate the external surfaces of the tank system from the environment and reduce the electric current demand on the cathodic protection system required to obtain the desired protection levels throughout the life expectancy of the tank system. EPA has received suggestions that the typically used coatings will inevitably be damaged and "holidays," or separations of the coating from the tank, will occur. Without a

cathodic protection system, all of the galvanic forces will be focused on the holiday, causing rapid corrosion and subsequent release. (The Agency does believe that a coating could be made sufficiently impermeable and durable to prevent the formation of holidays. This type of coating is referred to as a cladding and is discussed in the composite tanks section.) It is also argued that the cathodic protection system on a bare steel tank will be overworked. Particular concern has been raised about the premature consumption of sacrificial anodes. If not checked frequently enough, the tank may quickly become unprotected. Other analyses have suggested a drawback of the combined coated and cathodically protected system. Some data suggest that the cathodic protection system can cause delamination, a large scale separation of the coating from the tank, exposing the tank to the environment. This could lead to serious corrosion problems.

The Agency has reviewed these arguments and is persuaded that coatings will enhance the operation of the cathodic protection system by reducing its electric current demand, and, conversely, the cathodic protection system will protect the coated UST from corrosion-caused releases at holidays. Consequently, today's proposal requires both systems for new UST systems. In addition, the cathodic protection must be inspected and maintained in accordance with the Operation and Maintenance requirements of Section 280.31. The Agency requests comments on the merits of this approach.

There are a number of industry consensus codes that provided detailed performance requirements for coated and cathodically protected steel tanks. The Steel Tank Institute's "Specification for sti–P3 system of External Corrosion Protection of Underground Steel Storage Tanks" is by far the most widely used design standard for coated and cathodically protected tanks. The specification covers joint design, coating selection, and sacrificial anode design and construction. Another code under development is the UL Standard 1746, "Corrosion Protection System for Underground Storage Tanks." The UL code will allow considerable flexibility in the design of the tank. However, the design must meet strict performance requirements related to the structural integrity of the tank coating and sacrificial anodes. This code is just now being issued for comment, but some of the current tank designs (for example, the STIP3 specifications) are expected to pass the UL 1746 performance requirements. The comment period and time required to obtain UL certification adds a degree of uncertainty to the use of this code for coated and cathodically protected tanks. This issue is discussed further in the following section on composite tanks.

Underwriters Laboratories of Canada also publishes consensus codes for the design and construction of coated and cathodically protected steel tanks. These codes are reported to be in use in areas bordering Canada and include CAN4–603–M85M, "Standard for Steel Underground Tanks for Flammable and Combustible Liquids"; CAN4–403.1–M85, "Galvanic Corrosion Protection Systems for Steel Underground Tanks for Flammable and Combustible Liquids"; and CAN4–S631–M84, "Isolating Bushings for Steel Underground Tanks Protected with Coatings and Galvanic Systems." The Agency believes that tanks designed and constructed in accordance with these three codes, will perform adequately throughout their period of intended use and will not fail due to corrosion.

The Agency believes that pre-engineered, factory-installed coatings combined with sacrificial anodes for cathodic protection provides very reliable and longlasting cathodic protection for most situations. However, some tank configurations and site conditions may require the use of field-installed cathodic protection. Because the selection of field-installed cathodic protection is complex, today's proposal requires in Section 280.20(a)(2)(ii) that field-installed cathodic protection systems for tanks be designed by an independent corrosion expert. Among the variables which can affect corrosion are electrolyte activity, acidity, moisture levels, soil resistivity, temperature, bacterial action, and the presence of oxidizing agents. Because of the complexity of these influences, either operating singly or together, UST system owners and operators do not have the necessary expertise to select the most effective materials of construction and corrosion protection systems. Proper attention to these problem areas can practically eliminate the likelihood of releases caused by corrosion. EPA has concluded that an independent corrosion expert can best assess the corrosion protection measures that are most suited for the site-specific cathodic protection system. The Agency requests comments on the merits of this approach.

The third type of tank allowed in today's proposal (in § 280.20(a)(3)) is the composite tank. In this type of tank, a noncorrodible cladding covers a steel tank and prevents corrosion of the steel. It is essential that the cladding completely isolate the steel structure from the environment because, as described above, accelerated corrosion can occur at holidays or voids in the cladding. Therefore, the cladding must withstand rough handling during installation and must remain intact throughout the life of the tank. The composite tanks that are currently marketed are clad with FRP. However, it has been reported to the Agency that other cladding materials are currently being tested.

The Agency has reviewed the performance requirements and manufacturing techniques for composite tanks and has concluded that it is feasible to construct tanks with claddings that are sufficiently continuous, impermeable and durable to protect the steel structure of the tank from corrosion. Underwiters Laboratories is developing detailed performance standard for the design and construction of composite tanks and today's proposal recommends UL Standard Number 1746, "Corrosion Protection for Underground Storage Tanks," for guidance in meeting the requirements. The UL standard includes many of the performance requirements from both FRP and coated steel tank standards.

These tank types are presently allowed under the Interim Prohibition and according to the manufacturers, some of these tanks have been in use for as long as 20 years without a documented case of failure. However, because of a lack of any test data on the field performance of a large number of these types of tanks, the Agency is still concerned about the long-term impermeability of the cladding. Should the cladding lose some of its characteristics of impermeability, holidays could develop. Some manufacturers argue that corrosion would passivate in small holidays and cause the corrosion to cease. However, according to information available to the Agency, one user of composite tanks has retrofitted its composite tanks with cathodic protection. The tank manufacturer contends that this retrofit was precautionary and that there was no overt sign of corrosion.

Although UL is still developing UL 1746, three major composite tank manufacturers have received approval from UL to manufacture composite tanks. The UL 1746 standard is reported to be ready for public comment. This process will require a 60- to 90-day comment period and a short period after the comment period closes before final

publication. After final publication, a test period of about 6 months plus an additional month will be required before the tank manufacturers are certified. This adds a degree of uncertainty to the final UL approval of the use of these tanks.

Because of these uncertainties and because of the potential for corrosion at breaches in the cladding, the required level of performance must be greater for composite tanks than for coated tanks. The cladding on composite tanks must be more resistant to damage than coating on coated steel tanks. It must be highly impermeable to moisture to prevent corrosion-induced delamination of the cladding. In addition, the cladding must provide a greater degree of electrical isolation than a coating to provide certainty that the cladding alone will protect the steel from corrosion. The Agency invites comments and documented performance data regarding these issues. If no acceptable data exist regarding these concerns, then the Agency may require periodic tests conducted over the operating life of these tanks to identify any holidays. This subject is discussed further in the operation and maintenance section.

The Agency expects that other tank design, fabrication and corrosion protection techniques will be developed. In addition, certain environmental settings may have a very low potential for corrosion. Therefore, today's proposal includes a provision in Section 280.20(a)(4) for using alternative design and corrosion protection methods if the implementing agency determines that the method is no less protective of human health and the environment.

The owner and operator may use alternative designs and construction methods if the implementing agency finds, as a result of a demonstration or other means, that the alternative design or method is no less protective of human health and the environment. In deciding on whether an affirmative finding shall be issued, the implementing agency may consider:

- The nature and quality of the product;
- The proposed alternate design and operation; and
- All other factors that would influence the quality and mobility of the constituents and the potential for them to migrate to ground water or surface water.

If an affirmative finding is issued, the implementing agency will require the owner and operator to construct and operate the system in a manner consistent with the demonstration.

This approval process has been included to encourage innovation. In the process of preparing this proposed rule, the Agency has seen reference to several potential alternative systems such as nylon tanks, jacketed tanks, lined steel tanks and lined concrete tanks. In addition, some sites may not require the degree of corrosion protection required under today's proposal. If such systems are as protective of human health and the environment, the Agency desires to provide a mechanism for allowing approval of such alternatives. This provision will apply to both new and upgraded tank systems.

EPA intends that the implementing agencies have the responsibility of developing the approval process for alternative design and construction techniques. However, the Agency expects that requests for approval of alternative designs will be made by owners, operators, installers, and manufacturers. For example, an owner and operator may request an exemption from the corrosion protection requirements based on the low corrosion potential of the site. In another case, a tank manufacturer may request approval for the use of an alternative tank design at any site based on the corrosion resistance of the tank. The Agency anticipates that, in both cases, the implementing agency would review performance data prepared by a corrosion expert and product demonstration information submitted by the party requesting approval. In addition, EPA recognizes that the implementing agency could also review data and opinions from independent experts in the field of concern.

Today's proposal drops the 12,000 ohm-cm exclusion of the Interim Prohibition. This exemption has been criticized as an inadequate measure of the propensity to corrode. Soil resistivity values are average resistivities of the soil between the surface of the ground and the depth being measured, and variability is common. Large variations result in soil composition changes which are responsible for the promotion of corrosion activity. A concentrated corrosive attack can occur even in areas of generally high resistance and low variability. It is reportedly not uncommon to find premature pipe leaks and tank failures in soil of more than 30,000 ohm-cm due to soil resistivity variations.

Soil corrosivity is actually a function of many variables in addition to resistivity, including soil conductivity, pH, moisture content, chloride and sulfide ion concentration. The use of the single resistivity variable is inadequate to measure the propensity to corrode and proposes today to drop the 12,000 ohm-cm exclusion. Further, because of the complexities involved in attempting to accurately measure the propensity to corrode, the Agency is not proposing any alternative exclusions. This increases the stringency of the rule by requiring all tank systems to have corrosion protection systems.

(3) Piping Requirements (Section 280.20(b)). The design and construction of underground piping is addressed in today's proposal. Although the requirements for piping are similar to those for tanks, the Agency feels that design and construction requirements for piping should be addressed specifically in the regulation to identify them clearly.

There are numerous industry consensus codes that are specific to the design and construction of UST piping systems. These include codes written by the Underwriters Laboratories, Underwriters Laboratories of Canada, National Fire Protection Association, and American Petroleum Institute. In addition, American Society for Testing and Materials has published more than 130 standards on the design and fabrication of steel pipe. The Agency believes that they provide adequate guidance for ensuring compliance with the requirement.

The standards that are recommended for guidance in the design and construction of FRP pipe (in § 280.20(b)(1)) include standards for flexible connectors. The ends of each line as well as changes in direction should be fitted with flexible connectors or swing joints to allow movement of the tank and pipe system. These flexible connectors can be used with steel or FRP piping, but swing joints built of threaded connectors cannot be used for FRP pipes. Swing joints are also discussed in the following section on installation requirements.

Steel piping is required to be coated and cathodically protected in § 280.20(b)(2). The cathodic protection system must be designed by an independent corrosion expert because the Agency believes that the layout of piping systems has a major impact on the type and degree of cathodic protection needed. There are many possible piping layouts, depending on the site plan, making even a pre-engineered sacrificial anode system essentially field-installed. Therefore, the requirements for cathodic protection of steel piping are the same as those for field-installed cathodic protection for tanks.

Only FRP and cathodically protected steel pipe are identified specifically in the regulation. The Agency does not

know enough about other types of pipes to allow them specifically. However, as in the tank corrosion protection section, there is an allowance for alternative methods. The Agency expects that other design, construction and corrosion protection techniques may be developed in the future or already in use (e.g., cooper tubing). In addition, certain environmental settings may have a very low potential for corrosion. Therefore, today's proposal in Section 280.20(b)(3) includes a provision allowing for using alternative design and construction methods if the implementing agency determines that the method will prevent releases in a manner that is no less protective of human health and the environment than the two other methods described above.

Other Issues Requiring Public Comment. The Agency has identified three other aspects of design and construction that could have an impact on the structural integrity of UST systems. The advantages and disadvantages of these other aspects are not clearly established, and the Agency therefore is seeking public comment and information on whether there is a need to address them in regulation. The following is a brief discussion of those issues.

(1) Manways. All pipes and gauge hatches in an underground tank can be installed through a manway in the top of the tank. The principal use of a manway is to gain access to the interior of a tank for inspection and repair. In addition, all of the connections can be made to the manhead that covers the manway, protecting the integrity of the tank which is only violated by the installation of the manway itself. The mandated use of manways as the sole entry point for all pipes and gauge hatches in all UST systems is apparently a widespread practice in Europe. However, the common U.S. practice is to have several openings on the top of the tank for piping and gauge hatches. When all of the connections are made to several different openings in the shell of the tank, there is a much greater chance that one or more of the connections will be installed improperly. Multiple connections are believed to increase the probability of a release developing after the tank has been put into operation. A third benefit in the use of manways is that the manhole liner can function as an overfill catchment basin.

The manway also has disadvantages. If the manway is to also function as the route providing access to the appurtenances attached to the tank then all the pipes must be fitted with flanges, unions, or other couplings that can be disconnected without having to cut the pipes. These types of couplings offer an added place for releases to occur and thereby reduce the reliability of the tank system as a whole. However, even though these devices can fail, the coupling failures in a manway are easier to repair than failures in pipes that are connected in multiple places directly to inaccessible places on top of the shell of the tank. Manway couplings are accessible without excavation and are designed for easy replacement of the seals or the whole coupling.

The Agency recognizes there may be significant additional benefits from using manways. Comment and information is requested about the relative risks of the manway and traditional systems and, if EPA requires manways in the final rule, whether it will lead to a significant reduction in the number or volume of releases.

(2) Pumps. Two basic methods exist for removing the liquid stored in underground storage tanks: pressure methods and vacuum methods.

Pressure methods pressurize the entire tank or lines with either the liquid itself or a gas, such as air or nitrogen. This method is inexpensive but has some disadvantages: It can be unreliable and it can pose environmental problems if leaks occur. If a leak occurs in a pressurized system, when activated, it will pump the stored substance into the environment.

Vacuum methods draw the liquid out of the storage tank by subjecting the pipe to a suction. In this system, a pump is installed above grade level and the suction line is extended down into the tank near its bottom. The advantage of this system is that the line from the tank to the surface uses less than atmospheric pressure so that if there is a leak in the pipe, only air will enter the pipe—no liquid would escape into the environment. From an environmental standpoint this is the most desirable system. Several European programs have mandated suction pumps as intrinsically protective of the environment.

Pumping problems may arise with the suction method if leaks develop in the suction line. The operation of the pump can be quite erratic and if the tank systems run unattended for an extended period of time the pump can be severely damaged before the condition is discovered. Such behavior is indicative of a leak and alerts the tank owner that repair is necessary.

The Agency seeks comments on the advantages and disadvantages of suction versus pressurized piping systems; their prevalence in use today; and whether pressure pumps present such a risk to human health and the environment that they should be subject to more stringent controls (e.g., line leak detectors or secondary containment) or even prohibited from new tank systems; and whether suction pumps present less of a risk and should be subject to less stringent controls (e.g., reduced leak detection requirements). The Agency is specifically interested in receiving information concerning experiences with the sizes and impacts of releases from these two different types of systems. (See Section VI.D.5. for further discussion of line leak detection methods and solicitation of comments and information on this subject.)

(3) Internal Corrosion Protection. Until the last few years, little attention has been paid to internal corrosion protection in the United States. Internal corrosion results from the reaction of water and oxygen in the stored product with the inside of the steel structure.

External corrosion has been the major type of corrosion-induced failure in unprotected steel tanks. However, as the incidence of external corrosion is reduced by coating and cathodically protecting steel tank exteriors, internal corrosion could become a major source of failure.

The Steel Tank Institute has identified two areas that are susceptible to internal corrosion and has developed recommended practices that protect them. The first area subject to internal corrosion is under the fill openings where filling the tank and taking dip stick readings can lead to accelerated corrosion. STI recommends that this area can be protected by welding wear plates to the bottom of the tank. Another area subject to internal corrosion is the unwelded plate overlaps. Water can become trapped in these crevices resulting in accelerated localized corrosion. These overlaps can often be eliminated by design changes, or they can be seal welded. A third solution to corrosion in plate overlaps is to cathodically protect the seam with sacrificial anodes. Another method to protect against internal protection, not included in the Steel Tank Institute's recommended practice, is to coat or line the tank interior with a noncorrodible material. Various countries in Europe mandate some of these practices to prevent internal corrosion.

EPA requests comments on industry experience with internal corrosion protection in terms of design, installation, efficacy and problems found. Information on the need for internal corrosion protection is also requested, including whether it should

be required for all new steel tank systems.

b. Installation (Section 280.20(c))

Overview. Proper installation is crucial to ensure the structural integrity of a new tank system. Installation includes excavation, tank system siting, burial depth, tank system assembly, backfilling of the tank system, and surface grading.

The data reviewed by EPA indicates that improper installation is a significant cause of steel and FRP UST system failures, particularly piping failures. Installation problems result from careless installation practices that do not follow recognized codes and procedures. For example, mishandling of the tank during installation can cause structural failure of FRP tanks or damage to steel tank coatings and cathodic protection. Improper anchoring, backfilling, inadequate cover, and insufficient tightening of loose fittings can also lead to system failures (including the piping).

EPA believes that if owners and operators would follow correct procedures for all tank system installations, then the number of releases would be significantly reduced.

Current Practices. Several professional and scientific organizations have established standards for the installation of underground tank systems. These organizations include the National Fire Protection Association (NFPA), the Steel Tank Institute, Underwriters Laboratories, the National Association of Corrosion Engineers (NACE), the Western Fire Chiefs Association, the Occupational Safety and Health Association, the Petroleum Equipment Institute (PEI), and the American Petroleum Institute (API).

Collectively, these organizations have published more than ten guides, codes, and standards for installing UST systems. As discussed above, generally these publications are written by committees of knowledgeable professionals and subjected to independent peer review.

Some of the most important codes follow:

- PEI/RPIOO–86 provides the most recently developed and comprehensive of the recommended practices for installation of underground storage tank systems;
- NFPA 30 addresses tank systems comprehensively from a fire explosion perspective. It references other codes and sets performance standards;
- API 1615 covers the factors that can contribute to successful installation of petroleum UST systems;
- NACE/RP–01–69 and RP–02–85 contain chapters on the installation of cathodic protection systems for metallic storage and piping systems.

In addition, several tank manufacturers also provide their own installation instructions. At least one manufacturer of FRP tanks seals the instructions onto the tank.

State practices display considerable variation. At least 23 states have established requirements for proper installation. Most of the state regulations reference NFPA 30 as a general installation standard. However, other consensus guides, codes, and standards related to installation are also included by reference in some state regulations. For example, eleven states require that tank systems be installed according to the manufacturer's instructions, ten states require certification of the installation, and five states require installer certification.

EPA has previously addressed installation requirements for UST systems in two ways. First, under the Hazardous Waste Tank Rules, underground tank installers must follow proper installation procedures (in effect by requiring adherence to industry consensus codes) and the installation must be inspected by a registered professional engineer or qualified installation inspector before covering, enclosing, or placing a tank system into operation.

Second, although the Interim Prohibition of Subtitle I does not explicitly require the proper installation of new underground tank systems, the existing EPA guidance ("The Interim Prohibition: Guidance for Design and Installation of Underground Storage Tanks") recommends following the industry consensus codes and provides installation guidance in accordance with those codes.

Approaches to Regulation. The Agency considered six different methods or approaches that the owners and operators could use to assure themselves that the installations are properly completed. These alternative approaches are:

- Certification or approval of installers by tank system manufacturers;
- Certification of installers by state or local regulatory agencies;
- Inspection of the installations by registered professional engineers;
- Inspection of the installation by state or local agencies;
- Completion of a manufacturer supplied check list of installation procedures; and
- Testing of the tank and piping for leaks during and after installation.

EPA does not have information indicating that one of the above approaches is better than the others. EPA is seeking comment on the advisability of these approaches. The Agency would especially like comments on the relative merits of certifying the installation versus certifying the installers. A desirable attribute that should be considered with any approach is its flexibility in tailoring an installation to site-specific considerations.

EPA believes that regulation of installation practices is primarily an institutional problem. A key element to successful implementation of installation requirements will be a program for education and outreach. EPA intends to pursue such a program and seeks comment on how to proceed with an education and outreach program for owners, operators and installers regarding proper installation procedures.

Today's proposal builds on the Interim Prohibition Guidance, but is more explicit. Because of the importance of proper installation and its complexity, the Agency has proposed a set of nine performance criteria that must be met in order to satisfy § 280.20(c). These performance criteria are based upon recommended industry practice. They represent the major installation steps outlined in the Petroleum Equipment Institute Report RPI00–86, and the American Petroleum Institute Publication 1615.

The first of the proposed performance criteria is that precautions must be used to prevent damage to the tank and pipe coatings or structures during installation. Also, any damage to the tank or pipe must be repaired in accordance with the manufacturer's instructions. The Agency included this criteria because it believes that many tank and piping failures result from mishandling of the tanks before and during placement. The tank and pipe manufacturers generally provide instructions on proper storage and handling procedures. In addition, the tank and piping should be tested for structural failure at each major installation step (i.e., upon receipt of the tank, once the tank is placed in the ground, and after piping has been connected) prior to backfilling; tanks and piping should be pressurized with air and visually inspected for leaks using a soap solution. The test should be performed to provide assurance that the tank and piping are structurally sound before proceeding with the next installation step. The manufacturer's instructions must be followed when repairing tanks and piping to ensure that

the repaired tanks or piping will perform adequately. Generally, repair instructions are provided as a standard industry practice with each tank and piping system. However, if additional instructions are needed, the manufacturer must be contacted.

The second performance criterion is that the excavation must be large enough to properly backfill the tank, piping, and associated equipment. EPA believes that backfill is a major component of the structural integrity of the tank and piping system and that enough space must be provided in the excavation to adequately place and compact backfill. Sufficient excavation space is particularly necessary for proper, careful backfilling under the tank.

The third installation performance standard concerns the selection, placement and compaction of backfill materials. As mentioned above, EPA feels that the backfill is an important feature of the installation and that many tank and piping failures can be prevented by careful attention to backfilling. In general, the backfill material must be a clean, noncorrosive, free-flowing material such as washed sand or gravel. However, a specific type of backfill may be required by the manufacturer because of unique structural or coating features. The manufacturers also specify the thickness of lifts in which the backfill is placed, and the degree and method of compaction that must be used to support the tank and piping.

The fourth requirement is for supports and anchorage of tanks that are subject to high water tables or in flood prone areas. High water can create strong lifting forces on an UST, causing movement and structural failure if the tank is not properly supported. The possibility of a high water table that may result from flooding should be carefully considered when deciding whether anchorage and supports are needed. Surface water can fill the tank excavation area if the surface is not properly sealed. The tank manufacturers generally provide anchorage design information.

The fifth installation performance criterion concerns piping layout and installation. The Agency believes that unnecessarily complex piping layouts can complicate backfilling of the pipe system and lead to structural failure. Structural failure of the piping could also result from improper installation of the piping and piping accessories. Therefore, in today's proposal, EPA is requiring that the piping and piping accessories be installed in accordance with the manufacturer's instructions.

The sixth performance criterion is that the pipe joints must be cut accurately and deburred to provide liquid-tight seals. FRP pipe joints must be cut squarely and tapered cleanly to ensure a structurally sound joint. The tolerances and procedures for preparing FRP pipe joints are provided by the manufacturers. Steel pipe joints must also be prepared carefully to prevent failures. The pipe must be cut squarely and the thread cutting die must be sharp to produce tight fitting thread.

The seventh performance criterion is that swing joints or flexible connectors must be installed at the beginning and end of each line as well as where the line changes direction. Swing joints or flexible connectors prevent differential movement of the tank, piping and dispensing equipment from causing stress in the pipe joints. These swing joints can be constructed in several ways. A series of threaded elbows and connectors can be used with steel pipe. Flexible connectors can be used with either steel or FRP pipe.

The eighth performance criterion is that the tank and piping cathodic protection must be installed in accordance with the manufacturer's instructions, plans and specifications. Some of the cathodic protection systems have important layout and installation limitations. The manufacturers of these systems provide instructions on how to layout and install their systems.

The last installation performance criterion is that a tank and piping tightness test must be performed after the backfill is placed into the excavation area and before the tank and piping are placed into operation. This test must meet the same requirements as the tightness test in § 280.41(c)(1). API 1615 recommends performing this test as a final check that the tank and piping are properly installed. Eight states also require this test at new installations. The requirements for this test are similar to NFPA 329 requirements; however, EPA believes that the accuracy standard for the test in NFPA 329 cannot be met reliably. EPA is concerned that even with the other eight installation requirements that a final check of the tank and piping installations needs to be made. Tank and piping leaks could still occur even though the proper installation procedures are followed. The tightness test provides assurance that the tank and piping are structurally sound.

In addition to setting these nine performance criteria, the Agency is proposing today in § 280.20(d) to require that owners and operators certify that they have complied with certain requirements concerning the installation, leak detection, corrosion protection and financial responsibility associated with each new UST system. The Agency is proposing an amendment to the existing EPA notification form that must be submitted by owners upon first bringing an UST system into use. This proposed modification will cause owners and operators to indicate the manner in which the installation requirements have been met. EPA will require owners and operators of UST systems to use the Agency's form unless the states develop their own forms that require, at a minimum, the information required under the amended form. Other changes to the notification form are discussed later in Section 3 of this part of this preamble.

EPA has amended the notification form in a manner that makes it still easy to complete (in most cases, answers may be provided by checking a box) to minimize the burden on tank owners and operators, the majority of whom are small businesses. In the proposed form, the owners and operators are required to check off which of the six alternative methods were used to ensure proper installation of tanks and piping. There is also a provision for owners and operators to describe any other methods used to ensure proper installation.

For the purposes of complying with the certification requirements, an authorized representative of the owner and operator may sign the form. In addition to the owner and operator's signature, the tank installer must also sign the certification of compliance form.

The Agency requests comment on today's proposed installation requirements. In particular, EPA asks for comment and experience on checking a new tank system installation with a tightness test of the tank and piping. The Agency is concerned that the tightness test may be redundant because new tanks are also required to have release detection. For example, is such a requirement necessary with double-walled tanks or UST systems provided with some method of frequent to continuous excavation zone monitoring? The Agency seeks comment on when the tightness test should be performed. If the test is intended to detect installation errors, then should it be conducted after the tank system has completed any possible settling within the excavation area (e.g., 6 months or 1 year after installation)?

In addition to specifying key installation requirements in today's proposed rules the Agency is examining various programmatic means of ensuring improvement of UST installations. A

number of potential tools for improving installations have been identified; however, we are now in the process of determining the appropriateness of these tools in various situations.

2. Implementation Schedules for Upgrading of Existing UST Systems (Section 280.21)

a. Overview

Because of the potential problems associated with releases from UST systems, the proposed new tank performance standards require features designed to prevent releases, including: Proper tank and piping design, construction and installation; and corrosion protection systems. Later in this preamble, additional requirements that are being proposed today to prevent or minimize releases from all new UST systems are discussed in more detail, including: Release detection methods; overfill/spill protection devices; and, in the case of hazardous substance tank systems secondary containment and interstitial monitoring.

The majority of the estimated 1.4 million existing UST systems regulated under Subtitle I do not presently include any of the release prevention and detection features that are being proposed today for new UST systems. In fact, EPA estimates that approximately 80 percent of existing UST systems are bare steel and about 60 percent of them are more than ten years old. Most owners and operators do not yet practice any form of release detection and have not fitted their tanks with overfill/spills control equipment. Fortunately, most existing UST systems can be retrofitted with many of these safeguards (for example, cathodic protection to prevent corrosion at bare steel tank systems), thereby upgrading them with some of the protections expected to be provided by the proposed requirements and standards for new UST systems.

Today, EPA is proposing in § 280.21 two different schedules for upgrading existing UST systems to the new tank system design and construction requirements just described, and to the release detection requirements discussed in Section VI.D of this Preamble. As discussed in more detail below, EPA believes that the implementation of these requirements should be phased in because of the enormous size of the existing UST universe, and the practical implementation difficulties that owners and operators face as they upgrade their tanks to the new tank standards.

b. Current Practices

Most of the major oil companies, and at least one of the larger convenience store chains, have embarked on phased programs to upgrade their retail motor fuel tank systems. In ranking these UST systems on a priority list that is based on factors believed to be associated with the probability of release, these programs typically take into account the age of the UST systems, their material of construction (protected steel or not), and the corrosivity of the surrounding soils. The highest priority UST systems are replaced as quickly as possible with protected single-walled UST systems equipped with spill controls. The next priority UST systems are quickly repaired and upgraded to new tank standards. The lowest priority UST systems are those that already meet new tank standards or are otherwise unlikely to leak and thus have little need to be upgraded.

EPA has also identified several other major companies storing hazardous substances who have already embarked upon UST system upgrading programs. In many cases, these tanks appear to be phased out and replaced by either aboveground storage tanks or underground UST systems provided with secondary containment.

The majority of state and local regulations addressing new tank specifications have requirements for corrosion protection, release monitoring, and overfill/spill protection. However, four jurisdictions also explicitly mandate retrofitting existing tanks to these new tank specifications. One state requires retrofitting only as an option to removing, abandoning, or extending the life expectancy of the UST system. Other states increase release detection requirements as the UST system ages, thereby prompting voluntary retrofit or retirement of the UST system. Generally, state and local regulations address the various upgrading topics individually. For example, of the 18 UST regulations that include retrofit requirements for existing UST systems, 6 require corrosion/cathodic protection, 1 requires secondary containment, and 13 require some type of release detection. Eleven regulations specify retrofitting systems with overfill protection, with 5 of the 11 also requiring spill containment. Two jurisdictions have regulations which mandate the upgrading of tank systems in all four areas (corrosion protection, secondary containment, release detection and overfill/spill protection). In summary, there currently appears to be wide diversity concerning requirements for the upgrading of existing tank systems at the state and local level.

The majority of states have not yet established comprehensive UST regulations. However, 18 states are enforcing at least one of the major national consensus codes. Of these consensus codes, only the Uniform Fire Code, 1985, has guidelines addressing retrofit technologies. Eight states without comprehensive UST regulations enforce this standard and appear to therefore adhere to this code's retrofit guidelines for corrosion protection and spill containment.

Two nationally recognized standards address the retrofit of cathodic protection on existing tank systems. They are the American Petroleum Institute (API) publication 1632, "Cathodic Protection of Underground Petroleum Storage Tanks and Piping Systems and the National Association of Corrosion Engineers (NACE) Recommended Practice RP-02-85, "Control of External Corrosion on Metallic Buried and Partially Buried, or Submerged Liquid Storage Systems."

Corrosion protection can be retrofitted to existing steel tank systems and is expected to be very effective in eliminating galvanic corrosion as a source of UST system releases. Such retrofitting is not an uncommon practice, and at least one major oil company and one major convenience store chain are retrofitting many of their unprotected steel tanks with corrosion protection. One corrosion engineering firm alone has retrofitted over 2500 tanks with cathodic protection. Because each UST site is unique in its exact requirements for adequate corrosion protection, in practice the retrofitting of corrosion protection must be designed for a specific site by a trained corrosion expert experienced in the protection of underground storage tank systems.

Although relatively inexpensive to do, it is critical that the retrofitting of cathodic protection only be undertaken by a trained professional. First, the corrosion engineer must gather a site history including detailed information on tank location, dimension, age, coating and lining, material of construction, type of backfill, anchor system, history of repair, and inventory problems. The engineer must also obtain information on possible interference sources (stray currents) and corrosion protection in place at nearby buried metal structures. Second, the corrosion engineer must do field testing. This includes measurement of structure-to-soil potentials, a site inspection, and at least one test boring at the end of each tank. The borings are generally used to produce analyses such

as structure-to-soil potential profiles and soil electrical resistivity profiles. Third, the soil samples obtained in the field borings are also analyzed in the laboratory to determine presence or absence of sulfides, chlorides, hydrocarbons, moisture content, conductivity, and pH of the soil.

After analysis of this data, a decision needs to be made as to whether or not the UST system is likely to be in good enough condition to upgrade. If the system is judged to be in sound enough condition to be upgraded, the proper type, number, and placement of anodes is next determined. In localities with relatively new coated tank systems in soils of low corrosivity, a tank system may be protected by a series of several sacrificial anodes. However, at sites with moderate to highly corrosive soils or with large bare steel tanks without any coatings, the analysis may reveal that sacrificial anodes cannot generate enough current to protect the system. In such cases, an impressed current system must be installed. Impressed current systems have been recommended to EPA by several highly experienced corrosion experts as a preferred system for retrofitting cathodic protection because impressed current can be used to protect any UST system in any soil conditions, and current output can be easily adjusted to changing conditions at the site.

Carefully applied in a wide variety of settings, retrofitting of corrosion protection to existing bare steel UST systems appears to have significant potential to forestall corrosion-induced releases that are otherwise inevitable in the future. It is a relatively inexpensive procedure when compared to the costs of UST system replacement. Several firms are available nationwide that offer the full array of necessary expertise and experience to correctly apply this technology. Application of this technology to the UST universe addressed by today's proposal will require an enormous expansion of their services, if many existing UST owners and operators decide to upgrade their unprotected UST systems instead of replacing them.

Existing tank systems can also be upgraded by applying release detection for the first time. The wide variety of release detection methods available for new tanks is discussed later in this Preamble, but they are generally applicable to existing tank systems as well. Most state UST regulations have some form of release detection requirements. While these regulations ultimately determine which method can be used, generally, the regulations offer the option of choosing among several release detection methods.

Implementation difficulties anticipated with retrofitting of release detection to the large number of existing UST systems addressed by today's proposal has led EPA to conclude that these requirements must be phased in over a significant period of time. In particular, recent experiences from state UST program enforcement of their new release detection requirements corroborate this concern. Several of the most aggressive state UST programs have decided to phase in their release detection requirements over a 4- to 5-year period and have advised EPA that this is the quickest that the large universe of tank systems can be realistically addressed. (For example, both Florida and New York are phasing in programs within this time frame). States attempting to require more immediate compliance have also discovered that actual compliance has taken much longer than originally intended (for example, this has proved to be the case in California, which tried to require release detection in one year but now reports that the phasein of release detection will take up to three years). EPA believes that the national UST program will experience these same problems. The current market conditions and technological capabilities of the release detection industry, the size of the regulated community, and the widespread lack of application of or familiarity with any release detection to date at most UST facilities indicates that requiring the immediate retrofitting of release detection at existing UST systems is not practical or achievable.

Another possible approach to release detection retrofitting is provided by interstitial monitoring. Technically, impermeable liners and vaults may be retrofitted to existing UST systems, however, they are very costly and impractical retrofit techniques. Installation of impermeable liners and vaults require the excavation and removal of the UST system and then its reinstallation. Currently, in the United States there is no widely available technology for retrofitting existing UST systems to provide double-walled protection. This form of secondary containment requires replacement of the single-walled UST with a double-walled one.

A potentially more simple retrofit technology that will provide existing tanks with a form of interstitial monitoring that can be continuously monitored is available in Europe and has been widely used for diesel fuel and heating oil tanks. Systems under development in this country for gasoline UST systems consist of coating the inside of the tank and then also retrofitting a membrane liner inside the tank to enable interstitial release detection in the space between the tank and liner. This offers several features that may make it a promising retrofit technology. However, it is only commercially available in this country on a very limited basis as a new technology, and must otherwise be imported.

Finally, in order to fully upgrade to the new tank standards being proposed today, all existing UST systems would also need to retrofit controls to address releases from spills and overfills. Releases from spills and overfills can be prevented by implementing a spill prevention program, which begins with the simple practice of good transfer techniques. These techniques consist primarily of assuring enough space is available in the tank to receive the load of product to be delivered, as well as to closely oversee the in-filling process to assure trouble-free transfers from the delivery truck. In addition, existing tank systems can be retrofitted with overfill/spill protection devices. There are already a variety of overfill/spill protection devices available that can be installed on existing tank systems, and several more are under development. Several current state UST regulations require existing tank systems to be eventually retrofitted with overfill/spill protection using one of several methods. (Spills and overfills are discussed in more detail in the next section of the preamble.)

c. Approaches to Regulation

The Agency has considered several approaches and requirements that could be used to upgrade existing UST systems, as well as ways of phasing in the release detection requirements. The following discussions focus on the reasoning behind the approach proposed today as well as some of the alternatives considered during its development.

In summary, EPA is today proposing that all existing UST systems storing regulated substances upgrade or replace to the new tank standards over no longer than a ten year period. The proposed upgrading consists of several steps. First, in § 280.30(a), all existing UST systems are immediately required to institute practices for the careful filling of tanks to avoid spills and overfills. Release detection must be phased in § 280.40(c) within a 3- to 5-year period based on the type of tank

(i.e., the bare steel UST systems before the protected systems). All UST systems that cannot apply a reliable and effective method of release detection within those time frames must be permanently closed. Within ten years, all UST systems must be retrofitted or replaced to comply with the new tank standards, including the provisions for corrosion protection under § 280.21 and spill/overfill control equipment under § 280.30(c).

(1) Basic Requirement for Mandatory Upgrading or Closure of Existing UST Systems (Section 280.21). Today's proposal requires all existing UST systems storing regulated substances to be upgraded to the new tank standards within 10 years or be closed. EPA believes the present unprotected condition of most existing UST systems provides the greatest and most immediate threat to human health and the environment. A significant level of future releases can be avoided if these UST systems are upgraded or replaced to the new tank standards. As discussed earlier in Section V of this preamble, the Agency has decided to propose a gradual upgrading or replacement approach as the most feasible and implementable with this large regulated universe. The regulatory impact analysis described in Section IX estimates that significant environmental benefits will result from upgrading or replacing all UST systems within 10 years. Upgrading would generally consist of instituting a corrosion protection system and some spill and overfill equipment at the typical tank system.

By proposing to give the regulated community the flexibility to plan for and set their own priorities in upgrading their UST systems, EPA intends to encourage a more rapid upgrading to take place voluntarily. It also provides state and local UST programs the flexibility to establish their own priorities for mandating the phasing in of the needed improvements. Several states and local programs are already using the age of the UST systems to trigger mandatory upgrading or replacement.

As an alternative to the proposed approach, EPA has also considered several other ways of requiring UST systems to be upgraded within the proposed 10-year period:

- All UST systems could be required to replace or upgrade based on age, phasing in required improvements at the oldest tank systems first.
- Separate milestone years could be identified for different stages of the upgrade. For example, release detection, spills and overfill controls, and cathodic protection, could be required by different cutoff dates. The tank owners could upgrade as quickly as they desired as long as they also met these individual milestone dates.
- All UST systems could be required to upgrade or replace only if and when they leaked. This approach is used by several states, including South Carolina, New York, and California (with hazardous substance tanks).

EPA decided to propose in § 280.21 that all upgrades (or closures) of substandard existing tank systems simply be completed within 10 years. This approach is believed to complement numerous current industry trends towards upgrading or replacing UST systems voluntarily, while also setting a maximum time limit within which the benefits of upgrading must be obtained nationwide. EPA believes that the proposed maximum 10-year time period will allow existing UST owner and operators numerous ways of planning an orderly transition towards achieving the protections afforded by new tank requirements. This target approach is also believed to have the distinct advantage of providing states and local programs with the flexibility to take any of the different approaches described above (or some other approach) as long it is completed within this ten year period. Although this is the maximum time period allowed, EPA will encourage a more rapid transition where possible, so that the benefits of these improvements can be realized sooner.

(2) Phase-in of Release Detection at Existing UST Systems (Section 280.40(c)). Today EPA is also proposing in § 280.40(c) (1)–(2) to require that all existing protected single-walled UST systems have release detection within 5 years of the effective date of the final regulation, and the more leak-prone bare steel UST systems within 3 years. This means that the vast majority of existing UST systems will be required to have release detection within three years. State experiences to date suggest that this timeframe will be difficult to achieve with a regulated universe of this size. EPA does not believe that this implementation can take place in less than this time frame. Upgrading all existing UST systems with any one of the proposed release detection methods being proposed today will generate a tremendous new demand for services. It is doubtful that system manufacturers and installers could supply their products and services to all UST owners and operators in a reliable fashion that would ensure full compliance in less than three years. More rapid implementation is made even more difficult by the fact that today's proposed requirements will cause release detection to be applied to the vast majority of existing UST systems for the first time.

As is discussed later in today's proposal (see Section VI.D.), the Agency expects many owners and operators of existing UST systems to choose the combined infrequent tank tightness testing and inventory control method during the 10-year interim period allowed for upgrading all USTs to the new tank standards. They are the most widely used methods today and require the least amount of retrofitting. EPA anticipates this approach will result in much of the demand for release detection services to be placed on these technologies. Thus, in order to be applied in a reliable fashion, the expansion of these services will have to be phased in. As is also discussed in more detail later in this Preamble, today's proposed 5-year phase-in period for protected steel or fiberglass UST systems is expected to enable approximately 20 to 25 percent of the existing UST systems, those that are less susceptible to leakage as a class—to actually retrofit release detection at a later date. Allowing this additional time for these more protective UST systems should not result in significant adverse impacts to human health and the environment because corrosion-induced releases (the most common by reported cause of releases today) should be significantly less frequent at these UST systems.

Another approach that the Agency considered for phasing in release detection requirements was to base the phase-in on tank system age instead of tank system type. Because EPA has some evidence that older existing UST systems are more likely to leak (because they do not have corrosion protection) than younger tanks, release detection could be required sooner at the older UST systems than the younger ones. For example, UST systems over 15 years in age (as well as those of unknown age) could be required to phase in release detection within two years, the UST systems between 5 and 15 years old within 4 years, and the most recently-installed protected UST systems within five years. This alternative approach could have similar practical impacts, however, because most of the protected UST systems have been installed recently and, thus, would be phased in last under both approaches. The major difference between these two phase-in approaches is that the older USTs would be *required* to have release detection much sooner under the alternative approach. The Agency solicits comments and information pertaining to

the benefits that could be obtained by phasing in release detection based on age instead of tank system type. Information is also solicited concerning data that may further reveal whether, and to what extent, older tanks and piping may pose significantly more of a threat to human health and the environment than younger tank systems.

(3) Accelerated Upgrading or Closure of Existing UST Systems that Cannot Meet Release Detection Requirements (Section 280.40). Today's proposal (in § 280.40(c)(3)) requires all existing UST systems that cannot provide a method of release detection that meets today's proposed requirements to be closed within 3 to 5 years. This requirement is based on the Agency's conclusion that all existing UST systems, particularly those unprotected from corrosion, must have a method of release detection to protect human health and the environment. Thus, UST systems unprotected from corrosion and without release detection would have to be closed before the end of the 3-year phase-in period that would begin on the effective date of the final regulations. Similarly, protected UST systems without release detection would have to be closed before the end of the 5-year phase-in period proposed today.

(4) Request for Public Comment. The Agency is requesting comments on today's proposed schedules for implementing this program; including the requirements for the upgrading of existing tank systems and the scheduled phase-in of release detection. Comments and information are specifically requested in the following four areas:

- Is the proposed 10-year limit for upgrading existing UST systems appropriate or should certain components of these required improvements be mandated sooner (for example, see the next section of this preamble concerning the phase-in of spills and overfill equipment)? Should the states and UST owner/operators be allowed to set their own priorities in upgrading to the new tank standard?
- Are the proposed requirements to upgrade release detection, corrosion protection, overfill/spill protection, and, in the case of hazardous substance tanks, upgrading to secondary containment adequate? For example, is it necessary for steel UST systems being retrofitted with cathodic protection to also be required to have an internal coating applied to the inside of the tank to ensure releases are prevented?
- EPA has been informed by several experts in the corrosion-protection field that impressed current corrosion protection is the preferred technology for retrofitting existing tanks. For retrofit purposes, should only the use of this technology be allowed or should EPA also allow retrofit of sacrificial anodes to existing bare (or inadequately coated) steel systems?
- Current recommended industry practices (API) include the use of structural integrity standards to determine if an existing tank is sound enough to be repaired, because it is unreasonable to cathodically protect and otherwise upgrade a tank that is in imminent danger of leaking. The Agency specifically requests comments on what minimum structural integrity requirements may be needed to ensure an existing tank system can be safely upgraded to the new tank standards. Information is also solicited concerning methods and expenses associated with assessing existing USTs to determine whether they should be upgraded.

3. Notification Requirements (Section 280.22)

On November 8, 1985, EPA published the Final Rule on Notification Requirements for Owners of Underground Storage Tanks (50 FR 46602). Included in that rule was the notification form. Owners of existing UST systems were required to fill out and submit the form to their designated state or local agencies by May 8, 1986. This earlier notification complied with the requirements of section 9002(a)(1) of the federal statute. Section 280.3(c) of the November 1985 final rule (which today's proposal re-designates as § 280.22) also required owners and operators who bring UST systems into use after May 8, 1986, to notify the designated state departments or agencies within 30 days of installation. Such notification by new UST systems should be made using the November 8, 1985, federal form, as modified in today's proposed rule, or an approved alternate state notification form.

Beginning 30 days after the issuance of the final regulations resulting from today's proposal, § 280.3(h) of the November 1985 rule (which today's proposal redesignates as § 280.22) requires any person who sells a tank intended to be used as an UST system to notify the purchaser of such tank of the new owner's notification obligations under the regulations.

Owners who place new UST systems into use should note that we are today not proposing to modify the notification form promulgated in November 1985, except to require additional information regarding certification of the methods used to comply with the installation, financial responsibility, release detection and corrosion protection requirements. In particular, the proposed modification to the form requires the installer of the new UST system to sign the form along with the owner. This information has been added to the form so that EPA can be assured that the installation has been completed competently.

C. General Operating Requirements

1. Spill and Overfill Control (Section 280.30)

As discussed earlier in Section III, spills and overfills can occur in a variety of ways, usually as the result of human error. Because spills and overfills account for at least 15 percent of all state-reported petroleum releases, EPA believes that incidents of spills and overfills should be addressed in future regulations. Thus, EPA is proposing today to require spill and overfill controls.

The situation can be improved markedly through the use of any of the following:

- Proper operating procedures to include measuring the available capacity in the tank and using dry-disconnect couplings on all transfer hoses;
- A liquid level sensor with an alarm that is triggered when the liquid reaches a predetermined level;
- An automatic shutoff device that is triggered when the liquid reaches a predetermined level; and
- A spill catchment basin located around the fill pipe.

Many of these types of devices can be used to provide protection on either new or existing tank systems.

EPA considered several alternative regulatory approaches to reducing spills and overfills. One approach was to require specific design and construction techniques to be implemented at all UST sites, both new and existing facilities. This approach, however, in certain respects deprives the states of the ability to require different types of solutions based on site-specific information concerning the location of the UST system with regard to valuable ground water and potable water sources, the type(s) of product to be stored, and the likelihood of overfills and spills causing significant adverse effects on human health and the environment. Thus, EPA chose instead to allow the use of any of the above techniques to address the problem.

Overfill and spill prevention requirements are recommended in most national association and industry standards as well as the majority of available state regulations. The proposed approach allows the states to

retain the variability currently in their regulations while staying within the minimum national standard provided by EPA. There is currently no data available to suggest that one approach to the elimination or reduction of overfills and spills is more effective than any other.

In § 280.30(a), EPA is proposing a general performance standard that will require all tank owners and operators to ensure that releases due to spills or overfills during product transfer or delivery do not occur. Owners and operators of all tank systems must ensure that the operator gauges the tank to determine that the capacity available in the tank is greater than the volume of product to be transferred. This measurement is the logical, necessary first step in preventing overfills—it assures that there is enough empty space for the product being delivered. The owners and operators must also ensure that other proper product transfer procedures are followed, such as overseeing the transfer operations, draining the hose carefully before disconnecting it, and using dry-disconnect couplings.

Under § 280.30(b), all new tank systems must be equipped with spill and overfill protection by installing one or more of the following devices:

- A liquid level sensor with an audible or visual alarm that is triggered when the tank reaches 95 percent of its capacity;
- An automatic flow shutoff device that is triggered when the tank reaches 95 percent of capacity;
- A spill catchment basin around the fill pipe; or
- An equivalent device approved by the appropriate regulatory authority.

This requirement is built upon the list of recommended spill and overfill protection equipment set forth in NFPA 30. Proper product transfer procedures as discussed in NFPA standard 385 and in API Bulletin 1621 "Recommended Practice for Bulk Liquid Stock Control at Retail Outlets" describe, among other things, the requirements for the use of tight fill connectors and the need for the tank truck operator to oversee the transfer.

When existing tank systems are upgraded to new tank standards, or when external monitoring wells are put in place, the owner and operator must ensure that the system complies with the new tank design standards for overfill protection. As discussed later in this Preamble (see general requirements for release detection), existing and new spills may confound external-to-the-tank sensors and preclude the detection of a release from the UST system. Thus, today's proposal requires that any existing UST system using external release detection be provided with spill and overfill equipment.

There are several options for upgrading of overfill and spill equipment. One regulatory approach would be to require upgrading to new tank overfill and spill standards on the same schedule as the leak detection phase-in (i.e., 3–5 years). A second approach would be to require the retrofit of overfill and spill protection at the same time that corrosion protection of existing UST systems must be upgraded to new tank standards (i.e., within 10 years). The earlier phase-in (3–5 years) would help prevent overfill releases that would otherwise trigger alarms on newly installed external monitors. Florida, for example, requires monitoring and overfill protection retrofits simultaneously, at an earlier date than corrosion protection. Comments are requested on this issue of which time frame is most appropriate for phasing in spill and overfill equipment at existing UST systems.

The Agency has decided to propose in 280.30(c) a 10-year deadline for upgrading overfill protection at all existing UST systems to the level provided by the new tank standards. During the intervening period, owners must use improved product transfer procedures (280.30(a)). There are two major reasons for tying phase-in of overfill equipment to the cathodic protection retrofit requirement. The first is simplicity—keeping all the leak prevention upgrade requirements scheduled together will be easier to implement and more easily understood by the regulated community. The second is related to available technology. For several years, European countries have relied predominantly on overfill prevention as opposed to overfill and spill containment. These new types of prevention devices, both foreign and domestic, appear to be just beginning to enter the American market. A short upgrade deadline could force tank owners toward the overfill and spill containment equipment that is readily available now. A longer upgrade period gives the marketplace more time to adjust and could allow technological advances recently introduced more time to be made available.

2. Operation and Maintenance of Corrosion Protection (Section 280.31)

a. Background

Proper operation and maintenance of corrosion protection systems can reduce the incidence or volume of releases due to corrosion. Corrosion was found to be the single most common cause of releases in existing underground tank and piping systems reported by State and local officials in the two EPA State Release Incidents Studies. All presently available studies of UST releases and their causes cite corrosion as the leading cause of failure in the existing unprotected steel tank systems.

Today's proposed rule requires corrosion protection of all new steel tank systems as the means of preventing corrosion. All existing steel tanks systems will have to be upgraded to include corrosion protection within 10 years. In order to be effective, these corrosion protection systems must be inspected and maintained. Corrosion protection systems can fail in a number of ways. For example, coatings can deteriorate, wire leads to cathodic protection can break, sacrificial anodes can be consumed, impressed current can be shorted or otherwise fail, adequate potential may not be maintained. Proper operation and periodic maintenance of these systems can avoid all of these potential problems.

b. Current Practices

The National Association of Corrosion Engineers (NACE) provides guidance on the proper design, installation, operation, and maintenance of corrosion protection for steel tank systems. In particular, NACE provides standards for cathodic protection systems. In Chapter XIII of its publication "Guide for Inspection of Refinery Equipment," the American Petroleum Institute (API) has also developed recommended practices for the proper inspection and maintenance of corrosion protection for tank systems.

Over fifteen states already have requirements concerning the monitoring of corrosion protection systems. Seven require monthly inspections of impressed current rectifiers; nine require annual site inspections by a qualified person; one requires semi-annual inspections; and two require these inspections after the first year of operation and every five years thereafter. Most of these states require that the site inspections include measurements of the structure-to-soil and structure-to-structure potential as well as rectifier voltage and current readings.

Under the Hazardous Waste Tank Rules, inspections of corrosion protection for underground tank systems are required. Cathodic protection must be inspected at least annually. However, those systems with impressed current must be inspected at least every other month. Under Subtitle I, the Interim

Prohibition (Section 9003(g)) does not explicitly require the maintenance of corrosion protection at new UST systems. However, as explained in EPA's Interim Prohibition Guidance Manual, the performance of corrosion protection should be monitored periodically.

c. Today's Proposal

Today's proposed rule requires that all corrosion protection systems be operated and maintained to continuously provide corrosion protection to the metal components of an UST system. The Agency has not specifically addressed the issue of whether all metal components on a FRP tank or pipe should be protected by cathodic protection, but only requires that corrosion protection be provided. The Agency considered requiring cathodic protection for all metal components because of potential failure of such components (e.g., pumps, pump housing and fittings). Because such a requirement could be construed to cover other metal components such as striker plates, bushings, and bunghole covers, the Agency has not incorporated the requirements in today's rule. The Agency does not have sufficient data on failures of these individual metal components on a FRP tank or pipe to determine that this level of protection is needed. The Agency invites comment on which components, if any, should be cathodically protected, whether there are noncorrodible, metal alternatives for these components, and what form of corrosion protection is appropriate if cathodic protection is not required.

In today's proposed rule, EPA is proposing two different inspection schedules for coated steel tanks and piping with cathodic protection. After the initial inspection, it is proposed that factory installed cathodic protection systems (such as those included with sti.P3® tanks) be inspected at least every five years. All other cathodic protection systems on steel tanks and piping are to be inspected at least annually after the initial inspection. The less frequent inspection interval for the factory installed cathodic protection is proposed because of the stringent fabrication and installation standards for these tanks. EPA feels that there is less chance of damage to, or failure of, the factory installed cathodic protection systems that are built to national fabrication requirements (e.g., sti.P3) than for field fabricated systems. Generally, these factory installed systems have 30 year limited warranties provided by the tank manufacturer.

For field fabricated cathodic protection systems, EPA is proposing that the NACE standard for inspection intervals (not less than once per year) be adopted. EPA feels that this more stringent inspection standard is appropriate because there is more potential for faulty installation of these systems and for damage to the system either during or after installation. All steel piping will be subject to this requirement. The annual inspections required by NACE RP-02-85 (and the five year inspections noted above) ensure that adequate corrosion control has been achieved for underground steel structures by observing the following criteria:

- A negative (cathodic) potential of at least 0.85 volts as measured between the structure and a saturated copper-copper sulfate (Cu-$CuSO_4$) reference electrode contacting the soil; or
- A negative (cathodic) potential shift of at least 300 mv as measured between the structure and a Cu-$CuSO_4$ reference electrode contacting the soil. This shift is the difference between the unprotected potential and the potential with the protective current applied; or
- A negative (cathodic) polarization potential shift of at least 100 mv measured between the structure and a Cu-$CuSO_4$ reference electrode contacting the soil. This shift is the polarization decay which is determined immediately after the protective current is interrupted.

There is currently a proprosal before a technical practices committee of NACE to revise the criteria for determining that cathodic protection systems are functioning properly. The proposed revisions would refine some criteria and there is discussion of deleting other criteria entirely. The Agency is today proposing that cathodic protection be monitored according to currently applicable NACE criteria. In the event these criteria are modified in the near future, the Agency will evaluate at that time whether to make parallel changes in its final regulations.

NACE RP-02-85 recommends more frequent inspection intervals where indicated by operating experience. The annual and bimonthly inspection requirements are therefore minimum requirements. In accordance with the NACE code, the bimonthly inspections of impressed current systems can be done by the owner or operator, and do not require the services of a corrosion expert. The third requirement, that the corrosion protection system be operated and maintained to protect the tank system from corrosion, effectively requires more frequent inspections when warranted.

As mentioned previously, the Agency is aware that some tank manufacturers recommend less frequent inspection intervals for coated tanks that have galvanic type cathodic protection systems attached to the tank body. The Steel Tank Institute recommends inspection by a corrosion expert of the cathodic protection system on this type of tank system one year after installation and every five years thereafter. The Agency seeks comments on the advantages and disadvantages of allowing less frequent inspections for those tank systems that are equipped with premanufactured corrosion protection.

In addition to the minimum requirements for inspections at least once per year or once every five years, today's proposal also requires testing or inspection of impressed current systems on a bi-monthly basis. The rule also specifies that those inspections that are required at least once a year or at least once every five years be conducted by a qualified corrosion expert. The bi-monthly impressed current test or inspection, however, may be conducted by employees of the owner or operator, provided the employee has been trained in the procedural steps for conducting and recording the results of the inspection or test. This distinction is made because the less frequent inspections require a complete knowledge of cathodic protection systems, their modes of failure or malfunction, proper diagnostic procedures, proper data interpretation and corrective action options whereas the bi-monthly inspection or test is principally a matter of visually verifying that the system is operational and performing adequately.

d. Inspections

The Agency has considered a range of alternatives for the required operation and maintenance of tank systems. Three alternatives included considerations for requiring maintenance and inspections for (1) the entire site, (2) the tank system equipment, and (3) the corrosion protection systems only. For each of these three approaches, consideration was also given to whether the requirements should apply to new tank systems only or to all tank systems. The Agency also considered a general performance standard which would simply require that the tank system would be maintained in proper working order.

The site inspection alternative could cover inspection of (1) piping and auxiliary equipment, (2) instrument controls and electrical systems, and (3)

concrete pads, foundations and surrounding flora and soils. These are discussed in more detail below.

(1) Piping and auxiliary equipment. All accessible piping, pumps, valves and fittings could be visually inspected for leaks, proper supports, proper alignment, external corrosion, and signs of fouling. Pumps and valves could be checked for leaking seals or other signs of mechanical wear.

(2) Instruments, controls, and electrical systems. These systems could be checked for proper power supply, signs of leaks or corrosion, integrity of mountings and enclosures, proper lubrication and adverse environmental conditions.

(3) Foundations, pads and surrounding areas. Concrete bases for pumps or other equipment could be checked for deterioration, erosion settlement, cracks, or spalling. Concrete pads and surrounding soil could be checked for subsidence, unexplained moisture spots and deterioration. Grass and other flora around the concrete could be checked for damage that could be caused by releases.

The second option, to inspect tank system equipment, would principally encompass item number 1 from the Site Inspection Alternative. Such an inspection could cover some items from item numbers 2 and 3 of the Site Inspection Alternative. For example, equipment foundations could be inspected for cracks and settling and the equipment could be checked for proper anchoring. Similarly, visual checks could be made of instruments, controls, and electrical components associated with various equipment items.

The Agency considered requiring an inspection for tank deflection as part of a tank system inspection. As the tank and surrounding soils shift due to settlement, aging and frost heave, the tank may be distorted from its original shape. Small distortions are expected at most installations and the tanks are designed to withstand them. However, failure of the tank's backfill or foundation anchors can lead to excessive distortion of the tank and rupture. This type of failure, while not widespread is reported to occur most often in FRP tanks. One way to measure this tank distortion is to measure the inside height of the tank and compare it to the original design height. If this tank deflection exceeds a limit which depends upon the design and the size of the tank then the tank could be expected to rupture and cause a release. At least two FRP tank manufacturers require a measurement of tank deflection after installation to assure proper backfill placement. If the deflection exceeds two percent of the original diameter, the tank must be reinstalled. The Agency is not aware of any tank inspection programs that include regular, periodic tank deflection tests and is today seeking comment on industry experience with tank deflection measurement programs. EPA specifically requests comments on the advisability of EPA requiring periodic tank deflection measurements for steel and FRP tanks as a means of preventing tank failures. Of particular concern is how EPA could set a deflection standard for the different tank styles and materials of construction.

The third option, to inspect only the corrosion protection system, is a subset of the tank system equipment inspection. In this option, only the corrosion protection system would be inspected regularly to ensure continued corrosion protection for steel tanks. Two types of corrosion protection system inspections were considered. One type of corrosion protection system inspection is the inspection of the cathodic protection of steel tanks and piping. This type of inspection is described earlier in this section of the Preamble.

The second type of corrosion protection system inspection considered by EPA evaluates the integrity of the cladding on composite tanks. As described earlier in this Preamble under performance standards for new UST systems, the Agency is concerned about the corrosion protection performance of composite tanks. In the absence of definitive performance data, the corrosion resistance of composite tanks is a subject of continuing debate. Measuring the rate of corrosion or the integrity of the cladding would provide confidence that the cladding on a composite tank is protecting the tank from external corrosion.

Theoretically, the rate of corrosion could be measured by determining the electrical current flowing between the tank and the surrounding soil. This current is proportional to the rate of metal oxidation or corrosion. However, the Agency is concerned that this current is difficult to reliably measure because it could be masked by the current from other metal structures and environmental factors.

The integrity of the cladding could be determined by a test similar to the holiday test that is used to assess the integrity of a coating or cladding prior to installation. In this test an electrical potential is induced between the tank and a metal rod that is inserted in the surrounding soil. Current flow between the tank and the rod could indicate a gap or holiday in the cladding.

EPA requests comments on the advisability of requiring corrosion protection inspections for composite tanks. The Agency is particularly interested in comments and field data regarding experience in conducting these tests and their ability to indicate failures in coatings and claddings.

The advantages and disadvantages of each of the above three general approaches to inspection requirements are not clearly established. The Agency is today seeking public comment and information on whether there is a need to have a broader requirement that addresses the maintenance and inspection of the entire site or other tank system equipment. The Agency presently has several reservations with these approaches, however, because the general site inspection and the tank system inspection alternatives may be duplicative of the release detection requirements. Release detection systems have been proposed that should provide effective warning of releases from all components of the tank system, thereby reducing the need for general inspections. Also, because the vast majority of underground tank systems are completely underground and inaccessible to inspection, an inspection requirement appears to promise little practical benefit. Finally, our scrutiny of the numerous state and local programs in place or under development reveals that they do not consider those broader requirements for inspection to be necessary. Therefore, the Agency is proposing to require regular inspection and maintenance of the cathodic protection systems only.

3. Compatibility (Section 280.32)

a. Overview

In proposing a regulation on compatibility, the Agency intends to prevent tank system structural failure due to chemical and physical interaction between the stored substance and the tank system material. A compatible substance will not interact with the tank system to undermine its integrity or promote its corrosion. While no stored substance is totally inert with respect to the materials of a tank system, compatibility exists when such interaction is minimal and does not result in structural failure or corrosion-related releases during the operating life of the tank system.

Issues of compatibility differ depending on the tank material used. Compatibility with metal tank systems means that chemical and electrochemical internal corrosion is held to a minimum. For plastic

materials, compatibility means that the dimensional, physical, and mechanical properties of the materials are not eroded by the material stored. For tank linings, compatibility means the material stored does not cause blistering, underfilm corrosion, and internal stress or cracking. Compatible materials will not be able to permeate the lining to cause corrosion or deterioration of the tank.

Incompatible substances can attack metallic and FRP tanks in different ways. The interior of metallic tanks can be subjected to various corrosive attacks. The stored substance or impurities within it may be corrosive agents, or either one may act as a catalyst enabling the other to corrode the tank. Corrosive processes are themselves complex. In certain cases, the process is self-limiting, because an oxide film is deposited over the corrosion site and prohibits further corrosion. In other cases, the oxide film may enhance the corrosive process. Also, agitation caused by inflows or outflows may dislodge the film.

Incompatible substances subject plastic tanks to physical deterioration in several ways. Incompatible substances may chemically react with and alter the mechanical properties of the tank system, resulting in structural failures. Solvation, a process in which the stored substance is absorbed into the plastic tank, may cause the tank material to warp, soften, weaken, or become brittle. Also, the stored substance can interact with the tank while the tank is under stress, as when under a heavy load, to produce environmental stress cracking. In this way, an incompatible substance can initiate cracks that could lead to structural failure.

Trace impurities can also cause incompatibility. For example, a few parts per million of chloride in solution can quickly break down a protective oxide layer on stainless steel and lead to corrosion. Also, while hydrochloric acid is compatible with polyvinyl chloride, trace levels of benzene will allow the HCl to deteriorate a PVC tank or pipe.

EPA's review of available information concerning the causes of releases indicates that incompatibility is not frequently reported as a cause of releases. In fact, incompatibility was not even listed as a cause of releases in several analyses. Available data further suggest that most petroleum products stored in underground tanks—the major portion of the UST regulated community—are compatible with most of the common tank and pipe materials available. However, EPA does have information on releases caused by the incompatibility of hazardous substances with tank system materials.

Two situations require owners and operators to address the issue of compatibility. First, adequate care must be taken in the initial match of tank and pipe material to stored substances. Second, owners and operators must carefully consider the use of existing tanks for substances other than those originally stored. It is conceivable that a lack of care in ascertaining the tank or pipe material could lead to the storage of an incompatible substance.

Also, it has been suggested to EPA that additives to substances may be altered over time and cause future compatibility problems. For example, alcohol blends in gasoline may have harmful effects on FRP tanks. However, the Agency has not been able to document any instances of releases due to this type of incompatibility. The increasing use of fiberglass tanks by many of the major oil companies may mitigate against the use of new additives that could undermine the structural integrity of FRP tanks.

b. Current Practices

Industry groups, such as ASTM, NACE, and UL, have established tests and criteria for evaluating different aspects of compatibility. Many of these are tests of physical properties evaluated before and after the material is placed in contact with the substance to be stored. If the property change is within prescribed limits, the substance is said to be compatible. Different tests of compatibility can be chosen based on the substance to be stored, tank material, and environmental conditions of the site. Because of the variability in these factors, no compatibility test applies to all circumstances.

Tank manufacturers generally take responsibility for disseminating information on their tank's or pipe's compatibility with various substances. Manufacturers will also test a potential customer's substance to ascertain compatibility or, in the case of FRP, to design a customized compatible resin. Some FRP tank manufacturers have extensive R&D programs to develop new resins resistant to specific substances.

Of 22 state and local UST programs that were evaluated, 8 specifically address compatibility through a general requirement that all tank owners and operators use compatible materials and substances. In addition, 15 states base their UST regulation in large part on one industry code—National Fire Protection Association 30—and reference it as a general performance standard. NFPA 30 requires compatibility between the stored substance and the tank material.

Under Subtitle I, the Interim Prohibition requires all new tank systems to be compatible with the substances stored. As stated in "The Interim Prohibition: Guidance for Design and Installation of Underground Storage Tanks," EPA expects new tank system owners and operators to work with manufacturers to ascertain compatibility.

c. Approaches to Regulation

One of several approaches to compatibility that the Agency considered would require specific test protocols for compatibility. However, available information suggests that because no one compatibility test or set of tests would adequately cover all circumstances, such an approach would not be appropriate.

The Agency also considered a requirement that all tank owners and operators test for compatibility before placing the substances in the tank system. However, the compatibility of many substances is already well known and thus requiring all tank owners and operators to conduct compatibility tests should not be necessary.

The Agency also considered a requirement that tank owners and operators certify compatibility, particularly at existing tank systems which have had new or different substances introduced into the tank system. As mentioned above, this has been raised as a concern with respect to changes in gasoline blends that are stored in FRP tanks. There is also concern regarding the introduction of new substances into existing tanks where the precise nature of the tank material or lining is unknown. The Agency solicits comment on this issue and on whether some type of compatibility certification is necessary or appropriate for addressing such concerns.

d. Proposed Regulation

The Agency believes that the existing mechanisms for establishing compatibility are generally adequate and do not need to be improved by regulation. Manufacturers have taken the lead to demonstrate compatibility as an outgrowth of their desire to sell their equipment. Established test protocols are adequate and accurate for their intended use. As a result, today's proposal represents no change from the Interim Prohibition.

Today EPA proposes a performance standard requiring all tank system owners and operators to ensure the compatibility of the tank or piping with the regulated substance stored. EPA

believes this simple approach is sufficient given the minor role incompatibility appears to play in release incidents.

With this approach, the Agency intends to allow significant flexibility for state programs, while establishing a simple basic performance standard that prohibits any deterioration of any tank system due to incompatibility.

EPA expects that this standard will be easily satisfied by the regulated community. Compatible tank and pipe materials are well known and are already widely used to store the bulk of the substances regulated under Subtitle I. When new substances are to be stored in existing tanks or when new tanks are to be used for "unusual" substances, the Agency expects the owners and operators to take steps to ensure compatibility. These steps may include simply checking with the manufacturer, requesting the manufacturer to show compatibility, or commissioning compatibility tests.

A precaution that EPA has considered adding to this proposed rule is a requirement that all fill ports on new UST systems be equipped with a collar label that would provide information regarding the products which can be safely stored in the UST. This rule would require the owner and operator to check the collar prior to inserting a new product into the tank. The Agency is concerned, however, that it would be difficult to provide both complete and accurate information in such a condensed form. EPA solicits comment on this and other approaches of ensuring that all stored substance is compatible with the UST system.

4. Repairs Allowed (Section 280.33)

a. Overview

The repair of an existing bare steel tank typically involves the correction of deficiencies in the tank: repairing broken seams and welds, plugging corrosion-related holes, and applying an interior lining to extend the useful life of the tank. The application of the lining is an integral part of the repair process and consists of the application of a protective material to the entire interior surface of the tank. Pipes, fittings, and joints are not normally lined as part of this process due to the difficulty of applying the lining material in such confined spaces.

An existing steel tank is lined for two reasons: To provide additional internal corrosion protection and to repair tank systems that are not tight. In both cases, the lining is applied to extend the useful life of the tank.

Internal lining of a existing steel tank is a retrofit method that has been employed since the 1950s. (Both steel and FRP tanks can be lined internally provided they meet basic structural integrity requirements.) The American Petroleum Institute Bulletin 1631, "Recommendations for the Interior Lining of Existing Underground Storage Tanks," states that the following minimum standards must be met before a steel tank can be repaired:

- A tank may have no open seam or split more than 3 inches long;
- A tank may have no perforation larger than 1.5 inches in diameter, except under the gauge opening where the perforation may be no larger than 2.5 inches in diameter;
- A tank may have no more than 5 perforations (all less than 0.5 inches in diameter) in any one square foot area;
- A tank may have no more than 20 perforations (all less than 0.5 inches in diameter) in any 500 square foot area;
- Before measuring the diameter of perforations and the length of seams and splits, these openings must first be reamed until their edges are a minimum of ⅛ inch thick; and
- If any of these criteria are not met, the steel tank should not be repaired and lined. Tanks not meeting these criteria may not be structurally sound and should be closed permanently.

Usually FRP tanks are patched, rather than lined, with fiberglass matting and resin. For FRP tanks, the interior diameter of the tank should not have compressed more than one percent from its original measure in any direction. Tanks that have compressed more than one percent may be in danger of eventual failure and should not be patched. Patching is unable to provide the added structural support needed for such tanks.

b. Current Practices

Eight of the 21 states with regulations addressing tank repair refer to API 1631, the Uniform Fire Code, or similar guidelines. These guidelines include sections on tank purging, lining selection, tank manways, tank interior preparation, lining application, and tank sealing.

Currently, the Western Fire Chiefs Association is evaluating a proposal to eliminate from the Uniform Fire Code (UFC) the option of lining underground tanks in place. EPA plans to track the outcome of this proposal, and monitor industry efforts to develop improved recommended practices and concensus codes for tank repairs in response to the UFC proposal. The final rule may differ somewhat from today's proposal as the consensus codes upon which they are based may be changed in the near future.

A few companies account for over 99 percent of the services associated with lining of steel underground tanks in the United States. Contractors throughout the country are affiliated with these companies and perform tank lining according to the parent companies' stringent specifications. When the lining is installed in accordance with company specifications, it comes with a 10-year limited warranty against internal corrosion and defects in the lining materials.

Although the cost for removal and replacement of tanks is often significantly higher than the cost of lining a tank, tank owners and operators must evaluate this specific requirements based on operational needs and the technical feasibility of upgrading the existing tank.

c. Approaches to Regulation

One possible approach to repairs would be to prohibit any tank system repairs. If a tank system were found to be leaking, it would need to be replaced, or closed in accordance with applicable closure procedures. This regulatory option appears to be inappropriate because EPA has no definitive data to indicate that tank repair, if performed properly, does not work, and because a number of states currently permit tank repairs in their regulations. In addition, the choice of this regulatory option would prevent the use of an approach that may be particularly attractive to small businesses and which are able to make technically sound repairs to their existing tanks.

Another approach would be to allow unlimited repairs to the tank and its associated piping. This approach does not appear prudent because a tank system that leaks more than once indicates a propensity for failure that, given the consequences to the environment, is not worth risking.

In addition, the lining of pipes, joints, and fittings is not a viable method of repair. Wrapping or coating the leaking joint or section of pipe may under field conditions actually cause increased corrosion problems due to trapped moisture or incorrect coating application. It is typically more effective and less expensive to replace the leaking joint or section of pipe.

d. Today's Proposal

Today's proposed regulation diverges somewhat from the regulations for hazardous waste tank repairs. Under the Subtitle C regulations, repairs to existing hazardous waste tanks are allowed only

if they are extensive enough to constitute complete upgrading to the new tank standards (i.e., secondary containment). The system must also be tested and its integrity certified before it can be put back into service. A goal of the Subtitle C regulations is to replace or upgrade all tank systems with secondary containment as soon as possible, focusing first on leaking and old tanks.

Due in part to the size of the regulated community and other reasons discussed above in Section V, the Agency has decided to propose a rule for Subtitle I tank systems following a strategy that calls for an upgrading of all UST systems to new tank standards within 10 years. As described below, today's proposed repair regulations require upgrading to meet the corrosion protection provisions for new tank systems. Additionally, as in the Subtitle C hazardous waste tank rules, today's proposal requires that the integrity of tank systems must be tested before the system can be returned to service.

EPA believes that technically viable tank repairs should be an option available to tank system owners and operators. The approach proposed today in § 280.33 allows a one-time repair of tank vessels, if it can be accomplished in a technically sound manner, but requires the replacement of leaking sections of pipe, pipe joints, and fittings (if tightening joints does not stop the release). EPA decided to allow the tank repair process as a viable means of extending the useful life of an underground tank because many state and local regulations currently allow non-tight UST systems to be repaired, and acceptable industry recommended practices exist that, if followed, should extend the life of a tank appreciably and reliably. At present, EPA has no information to indicate that tank repairs conforming to API 1631 recommended practices are not effective or feasible.

On the other hand, repeated releases from the same tank are indicative of a fundamental problem in the tank system that most likely could not be rectified by continued repair. In addition, the repair of an already lined steel tank would require that the interior of the tank be sandblasted down to bare metal to allow the proper application of the new lining. This does not appear feasible and supports the proposed requirement that UST systems be repaired no more than one time.

The proposed approach also requires that some type of corrosion protection system must be retrofitted at the same time a steel tank is repaired/lined for failure due to corrosion. A tank that has failed due to corrosion will likely suffer additional corrosion following the repair/lining operation, unless this step is taken. According to API, bare steel tanks normally should be protected using an impressed current system, because this system can adjust voltage requirements for any tank-to-soil potential differential. Coated tanks may be protected using either the impressed current or sacrificial anode type of protection system provided that the coating is in reasonably good condition and still provides corrosion protection for the tank. Comment is specifically invited regarding this retrofit requirement for corrosion protection.

The proposed regulatory approach (in § 280.33(a)) for the repair of existing UST systems allows owners and operators to repair and line a tank to stop the tank from leaking or to extend the tank's useful life only if the person repairing the tank, or an independent registered professional engineer, will certify in writing that the repaired tank meets the following conditions:

- It passed the vacuum test with no adverse impact to the lining, determined by an internal inspection after the test;
- The liner material chosen is fully compatible with the contents to be stored in the tank;
- The tank has not been repaired or lined previously;
- A corrosion protection system is retrofitted if the tank being repaired is a steel tank that failed due to corrosion; and
- The tank was internally inspected and ultrasonically tested and determined to be structurally sound.

The use of the vacuum test proposed today (Section 280.33(d)) simulates a greater external pressure on the tank than would be found under normal operating conditions. A tank that is not properly relined (for example, if holes were not plugged or the surface improperly prepared) could not withstand the pressure of the test. Either the lining would not adhere or the tank could not hold the vacuum. A tank that is not structurally sound also would not hold the vacuum and could buckle.

EPA believes that immediate tank tightness tests are inappropriate for determining the success of repair procedures. Such tests cannot ascertain whether the lining material has properly bonded to the steel. In addition, tank tightness tests require tanks to be at least partially filled with product. EPA believes the owner and operator should know that the repaired system will hold product before introducing product into the system. Today's proposal (Section 280.33(f)) does require a tightness test within a year after the installation is completed. EPA believes that such a test is an important quality assurance test, if it is applied after the repaired tank has been subject to typical operating stresses for a sufficient period of time. A tightness test is unnecessary if the tank has interstitial monitoring or continuous to frequent monitoring because a repair failure will be quickly detected.

The owner and operator must replace all leaking pipes. The proposed regulations will not allow piping to be repaired (Section 280.33(e)). Leaking joints could first be tightened to see if this procedure corrects the leak. Joints and fittings that continue to leak after being tightened, or that are obviously damaged, must be replaced. The replacement piping must be installed in accordance with § 280.20, the performance standards for new UST systems.

5. Recordkeeping

a. Overview

Under the proposed regulations, recordkeeping is an important compliance tool for both owners and operators of UST systems and regulatory agencies. Records demonstrate that certain important past actions actually took place. When properly maintained, records can also serve to remind the owner and operator of regularly scheduled actions that must be performed in order to remain under warranty or within regulatory compliance. Finally, properly maintained records also allow later analysis of the tank systems by either the owner and operator or the regulatory agency.

Given the size of the regulated UST community, resources are not available that will allow a regulatory agency to physically inspect each major event as it occurs throughout the life of every underground tank system (for example, installation, release detection, repair, and closure). The availability of proper records, therefore, is the essential track record that allows the regulatory agency to gain rapid insight into the status of compliance at facilities when they are inspected.

b. Current Practices

Existing state and local regulations governing underground storage tanks address recordkeeping to some degree. Many of them have relatively comprehensive requirements. The most prevalent records required in state regulations involve notification, release detection, closure, operation and maintenance of corrosion protection systems, and tank system repair.

All existing programs that require release detection also require the maintenance of records for release detection. Daily recordkeeping of product inventory is usually required, including the amount of sales, deliveries, inventory on hand, measurements of water level in the tank, and reconciliation of any losses or gains. More than half of the programs examined require recordkeeping with other methods of release detection, including data derived from monitoring well samples, visual inspections, in-tank monitors, and interstitial space monitoring for double-walled UST systems.

Many of the regulations also address recordkeeping for tank closure. For example, temporarily out-of-service UST systems are normally subjected to the same recordkeeping requirements as operating tanks. Several regulations require documentation of temporary closure. Records of permanent tank abandonment or removal are also mandated. Usually, this includes record of the closed UST system's capacity, age, specific location at the site, as well as the date and method of closure. A few programs require recording of key closure information on the property deed as well as documentation concerning the disposal or reuse of permanently closed tanks.

Existing regulations often require maintenance of records for tests or checks of various system operations. Specifically, results of cathodic protection and leak detection system operational checks are to be recorded. In addition, records of the most recent tank and piping tightness test results must be maintained. Finally, results of maintenance service checks on corrosion protection, leak detection, and other system components are sometimes recorded.

Most state and local regulations require records of repair and/or substantial modification of tank systems. These records may include certifications from lining installers or repair contractors. In addition, certifications from the original tank manufacturer that a particular tank can be reused following repair are common.

Normally, the state regulations specify a minimum period of time for which tank system records must be maintained. This period varies from 1 year up to 6 years, with the majority of existing regulations specifying 3 years.

c. Approaches to Regulation

The regulatory approach to recordkeeping proposed by EPA today follows directly from the technical standards set out in today's rule. Although EPA could require owners and operators to adhere to the technical standards proposed today with minimal recordkeeping requirements, this approach would result in numerous implementation problems, if not making it completely impossible to determine whether individual UST systems are in compliance with these standards. EPA is convinced that there are several recordkeeping requirements that are essential and will serve both the regulated community and the implementing agency's mutual interests in assuring proper UST system management. These records will prompt effective UST system management and will demonstrate to the regulatory agency that the owner and operator are managing each UST system in accordance with the technical standards.

Accordingly, EPA believes that some recordkeeping is necessary in support of the technical standards for release detection, closure, operation and maintenance of corrosion protection systems, and UST system repair. Today's proposed recordkeeping requirements are intended to impose the minimum burden on the regulated community while at the same time still ensuring that owners and operators can demonstrate (on a site visit by the implementing agency) proper management of their tank systems. These requirements were not developed to ensure that compliance can be demonstrated over the total operating life of the facility; records demonstrating such long-term operational compliance were deemed unnecessarily burdensome. Given the enormous size of this regulated community, today's proposed recordkeeping requirements are instead intended to demonstrate recent compliance status prior to the on-site inspection by the implementing agency. In proposing these minimum requirements, EPA recognizes that state and local governments may want to augment them with more recordkeeping requirements as specific local conditions dictate.

Today's proposed rule sets forth recordkeeping requirements for release detection, closure, operation and maintenance of corrosion protection systems, and tank system repair. The recordkeeping requirements for release detection and closure are discussed later in this Preamble, where the corresponding technical requirements are described. Following is a discussion of the specific recordkeeping requirements for repairs and operation and maintenance of corrosion protection, and the general requirement that records be properly maintained and made available upon request.

(1) Corrosion Protection Operation and Maintenance Records (Section 280.31(d)). To assure continuing compliance with the performance standards in proposed 280.31 concerning the maintenance of corrosion protection at steel UST systems, all owners and operators with cathodically protected UST systems must retain records of recent maintenance service checks performed by a corrosion expert as well as inspections of each impressed current system s running condition by the owner and operator. The recordkeeping requirements in this area reflect the operation and maintenance standards proposed in 280.31. Thus, for field-constructed cathodic protection methods using impressed current, the results of the last three bi-monthly inspections must be available. For field constructed methods using anodes, the results of the last two annual service readings must be kept. At UST systems using premanufactured (and applied at the factory) corrosion protection under the tank warranty, the last service check conducted under the tank warranty, but completed no longer than five years ago, must be kept. Each of these requirements for recordkeeping were developed to reflect the level of oversight EPA believes is necessary to ensure corrosion protection is operating continuously and being properly monitored. For example, under today's proposal, the premanufactured cathodic protection systems for tanks require less frequent service checks and correspondingly less recordkeeping to ensure compliance with the operation and maintenance requirement. EPA expects that many corrosion protection systems will have at least annual service checks performed (and thus could have two service records under this proposed requirement) because cathodic protection for steel piping must be constructed in the field and is not available in a pre-manufactured form.

(2) Tank Repair Records (Section 280.33(g)). Also proposed today is a requirement that all owners and operators with repaired tanks retain a record that demonstrates the repair was properly conducted as required under 280.33. The certification of the repair required in 280.33(a) must be kept for as long as the tank is used for storage. Also, the results of the ultrasonic tank thickness test required by 280.33(a)(3) and the vacuum test required by 280.33(d) must also be retained for as long as the tank is used. These records are the minimum necessary to show

compliance with the 280.33 requirements.

No records of piping repairs are required because faulty piping and fittings cannot be repaired; they must be replaced in accordance with the new tank standards. Records concerning the repair of tanks must be kept for as long as the tank is used because it can only be repaired once, and a record of repairs will provide the owner and operator and implementing agency with the information that will ensure that more than one repair is not made and has been done properly.

(3) Maintenance and Availability of Records (Section 280.34). Today's proposal includes a provision that requires all UST system owners and operators to cooperate fully with the implementing agency by making all records immediately available regarding inspections, monitoring and testing results, and by complying with requests for document submission, testing and monitoring. This requirement stems from section 9005 of RCRA.

Also proposed is a provision that requires all the records required as part of the UST system standards be maintained either on-site and be available for immediate inspection, or at a readily available alternative site and be available for inspection upon 24 hours notice. This provision is intended to avoid unnecessary delays in determining compliance with today's proposed requirements during inspections. Most of the time, the Agency anticipates that all required records will be maintained on-site and therefore must be immediately available for inspection. However, the Agency recognizes that the maintenance of records on-site is not always possible at all sites. Therefore, if such records are stored off-site they must be available for inspection within 24 hours after the implementing agency provides notice to the owner and operator. This notice may be provided before an inspection takes place to make sure the records are available during the inspection.

(4) Issues for Public Comment. The Agency requests comment on today's proposed recordkeeping requirements. EPA also requests comment on the need for additional recordkeeping requirements. One type of record that the Agency considered requiring at all new UST systems in today's proposal is a site plan. This plan would show locations for the tank system components and would be useful for investigating suspected releases and for checking compliance. Several states now require site plans. The Agency did not include site plans for today's proposed recordkeeping requirements because of a number of issues noted below.

Comment is requested on several of the issues related to site plans. One of these issues is what features should be shown on the site plan. The Agency has considered requiring the site plan to show the locations of the tanks, piping, monitoring wells and other underground structures in the excavation area. A second issue is the level of detail that should be required. It has been reported to EPA that most tank installations are completed without engineering drawings. However, the installer could draw a schematic showing critical dimensions before closing the excavation. A third issue is whether the site plan should be submitted as part of the notification form or retained by the owner or operator at the tank site. The fourth site plan issue that EPA is requesting comment on today is whether the site plan should be retained for the life of the facility or some shorter period of time. EPA requests comments on these specific issues and on the advisability of including site plans as a part of the final recordkeeping requirements.

D. Release Detection

1. General Strategy

a. Overview

As discussed in Section V of today's Preamble, EPA has concluded that early detection is necessary to minimize contamination of soil, ground water, and surface water from underground storage tank system releases. Records from past release incidents indicate that, without the use of release detection, a release can become substantial before it is detected. In fact, the *Summary of State Reports on Releases from Underground Storage Tanks* notes that most release incidents were first detected by people seeing, tasting, or smelling the released material in the environment. To adequately protect human health and the environment, releases need to be detected well before they have become easily noticed through the basic human senses.

Several release detection methods are now available that can be used to detect releases before they have adverse impacts on human health and the environment. These methods range from periodic precision tests for tank tightness to continuous tank monitoring instruments. They vary widely in sophistication. Any method includes at least one sensor, a design that assures collection of data from any point in the tank system, and a data analysis capability to interpret results. (The variety of technologies available is described in detail in the sections below.) EPA believes that widespread implementation of release detection methods will result in more effective environmental protection. Several states and local communities implementing various approaches to release detection for UST systems are already recording a dramatic increase in the number of releases being detected. EPA is today proposing to allow several methods that, properly used by UST owners and operators, can quickly detect releases.

b. Current Practices

Release detection has been practiced as a voluntary activity by UST owners and operators only to a very limited degree in this country. They have mainly used the traditional methods of product inventory control and tank tightness testing. The *Summary of State Reports on Releases from Underground Storage Tanks* indicates that, for those incidents reporting a release detection method, about 20 percent of the releases were discovered as a result of inventory control and tank tightness testing. Most of the others were detected through inadvertent human observation (sight, smell or taste).

As a result of the limited use of release detection at existing UST systems, there is very little information concerning how to conduct release detection. Unlike many of the other aspects of proper UST management, recommended industry practices and consensus codes are not yet well established. Thus, a significant factor that has been recognized by EPA during the development of today's proposed approach towards release detection is the lack of industry consensus codes, recommended practices and guidances, and experience with release detection at UST systems.

The National Fire Protection Association's (NFPA) publication, "Recommended Practices No. 329: Underground Leakage of Flammable and Combustible Liquids, 1985," is one of the few documents presently available for use by UST owners and operators and state and local regulatory agencies as a source of guidance for appropriate release detection methods. NFPA 329 gives recommended procedures for the investigation, confirmation, abatement, and remediation of underground releases of petroleum products.

The most widely recognized information from NFPA 329 concerns its performance standard for a "precision test" (i.e., tightness test) that may be used to determine whether a tank is leaking. It defines a precision test as "any test that takes into consideration

the temperature coefficient of expansion of the product being tested . . . and is capable of detecting a loss of 0.05 gallons per hour." The recommendation that tank tightness testing be capable of detecting leaks as small as 0.05 gallons per hour was established over 40 years ago. It was based on performance NFPA believed could be achieved. However, in actuality, the standard is a goal that no one has yet demonstrated can be reliably met. NFPA 329 provides no guidance on how to meet this goal, but does describe several important variables that must be taken into account in conducting accurate tank tightness tests.

Although many state and local UST regulatory programs are just beginning to require release detection of various types, several of these programs suggest different possible regulatory approaches towards release detection that EPA could take. These programs often provide several methods for UST owners or operators to choose from in implementing release detection requirements. Some of the most common of these methods are tank tightness testing, inventory reconciliation, and monitoring wells. These methods are briefly discussed below.

Many states and local governments have adapted requirements for tank testing. Tank testing requirements generally build on NFPA 329. That is, the tightness testing techniques utilized must satisfy the requirements of NFPA 329 and be performed on a schedule or frequency set by the implementing agency. More than half of 23 states that were evaluated and determined to have enacted or promulgated UST regulations refer to NFPA 329. Seven other state and local regulations also incorporate the 0.05 gallon per hour detection requirement found in NFPA 329. In general, the frequency of the testing required by these programs increases with the age of the tank system.

Manual inventory control is the most commonly cited form of release detection in existing state or local regulations. Inventory reconciliation attempts to account for all product additions and removals in the operation of the UST system. The required frequency of the inventory control measurements and reconciliation varies, but all of the regulations that were reviewed by EPA identified the use of inventory control methods for release detection purposes. Several of the regulatory agencies require a more sophisticated form of inventory control, often referred to as in-tank monitoring.

Monitoring wells are another common method of UST release detection addressed in state and local regulations. Releases may be detected either by continuous or intermittent automatic sensors placed in the wells or by periodic manual sampling and analysis. Monitoring wells may be placed in the excavation area around the tank or within secondary containment. Generally, if secondary containment is used, a single monitoring well placed in a collection sump is considered adequate. The number of wells required by state and local programs, if no secondary containment is provided, ranges from two to six per UST site.

Also, various techniques exist for release detection within the walls of a double-walled tank. Manual (or continuous automatic) devices can be used to detect the presence of liquids or vapors, or changes in pressure or the level of liquids within the interstitial space between the walls.

EPA has noted that there sometimes is a difference between what particular state or local regulatory agencies require by regulation for release detection and what they actually implement or enforce. In some state and local jurisdictions, the regulatory agencies have been able to accomplish a higher level of control than that set forth in their regulations. In others, typically because of a lack of sufficient personnel, training and funds, the regulations have not been widely enforced. In addition, the quality control aspects of these regulatory programs are difficult to assess. For example, when a tank tightness test is currently performed on an existing tank, it is difficult, if not impossible, for the regulatory agency to verify the results. Thus, the impact of these new regulatory programs is not clearly established. However, EPA's study of local UST programs reveals that where release detection is being required, significant increases have occurred in the number of USTs found to be leaking.

A rapid increase in the development and implementation of many state and local UST regulatory agencies, as well as the development of the federal program, has spurred an increasing level of research and development of release detection technologies related to UST systems. For example, the American Petroleum Institute has recently prepared guidances concerning the use of monitoring well techniques and automated in-tank monitoring methods. Development of new release detection methods, often relying on sophisticated electronics, has also resulted in the formation of several new companies offering tank system testing. EPA has identified at least 250 different devices under development or already commercially available, primarily for use in release detection at petroleum UST systems. Presently, several of the release detection equipment manufacturers offer training programs for operators who purchase their systems. These training programs are usually short (at most five days) and may not have the time to adequately instruct the operators in both the theory and practice of tank system testing. Many new systems have circuitry that allows the integration of alarms and control equipment. The reliability of these new developments and of sensors, network design, and data analysis capabilities and performance has not been tested by long-term operation. Further, maintenance and quality assurance/quality control (QA/QC) programs are frequently not well developed.

The increasingly widespread availability and untried nature of these newly developed technologies, and the anticipated development of even more techniques, presents an additional challenge in generating release detection regulations for UST systems. As noted in the discussion of state regulations, a common approach is to allow the tank system to be equipped with one method from a list of release detection alternatives. However, as the number of available techniques increases, it becomes more difficult to provide quality control for the application of the various methodologies. Another approach taken by several states is to require the approval of various release detection methods on a device-by-device basis. This approach presents difficulties to an implementing agency because of the large number of sites that must be evaluated independently. The following section discusses the general regulatory approaches to release detection considered by EPA.

c. Approaches to Regulation

In developing today's proposal the Agency identified and evaluated the following different approaches towards establishing national requirements for release detection at UST systems. These approaches would establish fundamentally different roles for the federal government, state and local implementing agencies, and industry, by having each of these groups play a central role in one of the approaches:

• *General Performance Standard.* EPA would establish a release detection performance standard that would apply to all methods. The standard would require a detectable quantity (e.g., an amount leaked or a leak rate), a frequency of testing, a probability of detection, a probability of false alarm,

and a relationship of the detection limit to tank size. This approach would allow maximum flexibility (and responsibility) to industry to choose the reliable methods of release detection. EPA would provide technical guidance on designing, selecting, installing, and operating release detection;

• *Certification of Methods.* EPA would allow only release detection methods that have been approved by EPA. Approved methods would have to be backed up by specific procedures for installing, operating, and maintaining them, as well as by requirements for quality assurance/quality control and installer or operator qualifications. EPA would establish some measure of performance upon which to approve methods; or

• *Method-Specific Performance/Requirements.* EPA would establish requirements concerning the use of individual classes of methods of release detection and their performance. The underlying performance of the different methods could vary depending on the effectiveness and reliability inherent in each method.

Each of the above approaches requires that EPA establish acceptable performance standards for release detection. There are two ways to establish such standards of performance. The first is to specify a standard based on a predetermined size of release or release rate that is expected to pose a threat to human health and the environment. Once this unacceptable level of release is established, setting performance standards for release detection is somewhat simplified. Unfortunately, this approach towards standard-setting does not appear to be possible at this time because: (1) Determining the size or rate of an unacceptable UST release should be site-specific, and (2) the Agency's present level of knowledge as to the rates, sizes, and the development of typical releases from UST systems is insufficient to know whether a particular standard of performance would result in most releases being detected before they posed a threat to human health and the environment. The second approach towards specifying performance standards is to base them on the technological limits of release detection and require them to take place at a minimum within these limits of current technology. The release detection standards specified in today's proposal are based on this second approach to standard-setting. The Agency selected this approach recognizing that the performance limits of various methods of release detection are not equally understood.

Because some methods of release detection (such as in-tank volumetric release detection systems) are presently better understood than others, EPA considered setting minimum standards based on the performance of the better-known devices. However, today's proposal rejects this approach in order to avoid prematurely excluding the use of many other potentially viable—but less understood—methods. For example, some out-of-tank release detection methods offer significant potential for detecting even small releases, are in common use, and are an integral part of many local and state programs. While the precision of some of the sensors used in these methods are well known, the impact of environmental sources of interference that limit accuracy is not yet well known.

The standards being proposed today for each method of release detection are based on EPA's current limited understanding of the present technologies. Preliminary evidence from EPA's research program suggests that some of these technologies may become more refined and reliable in the future. Therefore, while the Agency wants to set a standard that would challenge present technologies, there is also a practical need to develop a rule that does not go too far beyond the reach of current practices. The available data suggests that there already is a significant number of leaking UST systems. Thus, EPA believes a program of regular release detection—even at a minimum performance level that is not as good as may ultimately be possible—will significantly reduce threats to human health and the environment. With this in mind, EPA is setting different requirements for different classes of release detection methods. The discovery of releases identified simply through the initiation of this release detection program is expected to provide significant benefits nationwide.

If EPA were to set a general performance standard for all methods, such a standard should require that the performance of the release detection method, along with the frequency of the testing, be specified. The standard should include:

- An amount released or release rate;
- Probability of detection;
- Probability of false alarm; and
- Frequency of test.

This four-parameter specification defines the limits of the threat to the environment and the confidence with which these limits can be met. For example, if the detection limit is expressed as a release rate, the relationship of the detection limit to tank size, should also be stated. Selection of this approach, along with the specific values for each parameter, requires the knowledge that each general class of detection can be understood in terms of these parameters and can perform up to or better than each value set by EPA. EPA does not believe that the data required to specify such a comprehensive standard is sufficiently complete for most methods of release detection and is concerned that such an approach may preclude the use of many methods of detection that will not be understood in this way for the foreseeable future.

Today, EPA is proposing a method-specific performance requirement approach to release detection. For certain classes of methods, EPA is proposing specific standards for the four parameters described above. For other classes of methods, EPA determined that it had insufficient information to specify such standards. The following discussion provides details of the alternatives considered and the rationale for selecting the proposed approach.

Approach 1—General Performance Standard. Using this approach, EPA would require release detection at all UST systems and would establish the same release detection performance requirement for each method, but would not specify the particular methods that are acceptable or unacceptable. The general performance standard would specify a complete four parameter performance standard (i.e., the amount of release within a specified period of time that must be detectable by any method used with specified probabilities of success and failure). The choice of appropriate technology would be left in the hands of state and local regulators, the regulated community, and the vendors of release detection methods. EPA would periodically report on the results of numerous ongoing research efforts and provide guidance that would assist state, local, and industry officials in implementing the release detection requirement. As technology and the knowledge of performance capability evolves, the Agency could revise the general performance standard to reflect the then current state of the release detection art.

This approach has several advantages. First, all methods would adhere to the same standard and would be required to equally protect human health and the environment, and the relative performance of all the methods could be directly compared when

enough information is developed to allow it. Second, by simply specifying a general performance standard, this approach provides the greatest flexibility to UST owners in selecting and implementing their preferred method. Third, the Agency could develop such a rule fairly quickly and it could challenge the vendors of the different methods to develop more performance-oriented test data to show they could meet the general standards.

This approach has some disadvantages. Selection of a general performance standard may preclude the use of promising types of release detection (an outcome that EPA cannot predict and does not deny). This approach also requires that the capability of release detection technology, and the impact of an uncontrolled release, be known. Any standard defined today would have to be based primarily on the current performance of volumetric tank tightness tests because they are the best understood of the methods currently available. It is also uncertain under this approach how the performance of other methods could be compared to such a standard. Further, as knowledge of all the methods increases, future revision to a general performance standard developed based on today's limited data could result in some confusion and implementation difficulties in the regulated community and the states (who would have to revise their programs and reassess methods of detection to keep up with these changes).

A major problem in specifying a single release detection rule is that a "typical" quantity of product released at the tank is not easily related to the quantity-of-material measured by some methods of release detection especially most out of tank leak detection methods. A detectable quantity, may be expressed as a release volume rate (most easily defined for in-tank release detection systems) or as a concentration of soil contamination in ppm (most easily defined for external release detection systems). A single performance standard would require that the relationship between the release rate and concentration of soil contamination be quantified. In-tank measurements provide the most direct measure of a leak and can, in principle, identify a leak before any significant product is released into the environment (provided the test is conducted frequently and release exceeds the threshold of the test). The product level measurements can be quantified in terms of flow rate, and the performance of the release detection systems is reasonably well known. In practice, tank tightness tests are not performed as frequently as desired because of their impact on dispensing operations and cost. The automatic product level methods can be applied more frequently than tightness tests and thus could at least partially alleviate this problem. Data available to EPA on these methods, however, suggest that they may be less sensitive than some methods of tank tightness testing. Out-of-tank release detection methods can be operated continuously or frequently without affecting dispensing operations, but it may be necessary to calibrate monitors at each site to interpret a measurement as a rate of leakage. A further difficulty is that the performance of these out-of-tank monitors is not well known, and regulated substances may be released in significant quantities in the environment before a release is detected.

Under this approach, EPA would specify a four-parameter performance standard applicable to all classes of release detection methods. The standard considered by EPA for this purpose is the one specified today for tightness test devices; this standard was considered because: (1) The capability of tank tightness testing is the best known; and (2) this standard would challenge vendors to improve their knowledge of the capabilities of these and other classes of methods. EPA lacks sufficient data, however, to ascertain that the in-tank parameters are achievable by all other classes of methods. Moreover, EPA's research necessary to establish the technological limits of performance for each class and an evaluation of these systems will not be complete before final rules are written. Alternatively, EPA could eliminate those methods of release detection for which information is incomplete in the proposal, but did not, because it wants to maximize the number and variety of detection systems available for use.

If EPA selected this approach, each manufacturer of a release detection method will eventually specify the precision and accuracy of its methods in terms of the four-parameter test description. This performance data is needed for owners and operators to make environmentally protective and cost-effective choices. Of particular concern to EPA is how the performance of non-volumetric methods can be measured against the volumetric four-parameter standard described in today's proposal for tank tightness testing. Requiring all methods to meet this standard could necessitate on-site calibration each time such a method (e.g., soil gas or groundwater monitoring) is used.

Approach 2—Certification of Methods. Under this approach, EPA would establish criteria and procedures for judging and certifying the various commercially available methods and devices. EPA could review and evaluate methods through these established procedures as well as foster and accept the results of such reviews by independent professional associations capable of doing these certifications (e.g., Underwriters Laboratories or the American Society of Mechanical Engineers). Under this approach, the manufacturers of the various methods could conduct the necessary performance evaluation reviews and submit these results for consideration to EPA or an independent review organization.

Under this approach, a release detection method could not be used until approved by EPA. Thus, unacceptable or questionable methods would not be allowed until demonstrated to be accurate and reliable. This approach provides the clearest direction possible to the tank owner and operator about methods that can be used so that implementation by the regulators would be simple and straightforward.

There are several disadvantages to this approach. The most significant disadvantage is that it would be difficult to implement a certification program rapidly. Such a continuing, affirmative federal regulatory presence would also run counter to the approach being taken to bolster and encourage the lead of state and local programs in all aspects of this program. It would undoubtedly result in significant changes to regulations currently in place at the state and local levels. Based on the experiences of similar approaches taken under other EPA programs, it could take up to two or three years beyond final rule promulgation to begin actually approving devices, thereby delaying implementation of these release detection programs. These delays in program implementation would enable numerous releases to erupt undetected over the next several years with potentially significant adverse consequences to human health and the environment. This approach also would pose significant implementation problems; for example, decisions would have to be made as to which of these devices to review first. The first approved devices would have significant marketing advantages over methods yet to be reviewed.

Approach 3—Method-Specific Performance Requirements. Under the

approach which is proposed today, EPA would establish specific performance standards and a minimum frequency of test for each class of release detection methods. A different performance standard could be specified for each method and performance standards for some classes of methods would not contain all of the parameters discussed under approach 1. Restrictions governing the frequency of each method's use and siting would be specified. The type of performance standards for each general method would depend on the principle of its operation. For example, one criterion for volumetric tank tightness testing would be a minimum release rate, while for soil vapor monitors a minimum detectable concentration may be more suitable. The development of performance standards would be primarily based on data provided by manufacturers and the results of EPA research as well as that of other groups.

This approach is very similar to the first approach but provides performance standards for each specific method rather than establishing one performance standard for all methods. The primary advantage of this approach is that it would set separate standards for each class of release detection methods. These standards could be based on data available to EPA at this time. Also, this approach would allow industry and the states to have significant flexibility about the choice of individual methods that can meet the minimum performance standards. Because certain limitations of use will be necessary to meet this required performance, not all methods could be used in all situations; this would reduce misapplication and incorrect installation of methods.

The primary disadvantage of this approach is that standards of release detection performance will be nonuniform. The standard for one release detection system may be more or less stringent than other systems. Further, individual owners and operators may have more difficulty than under approach 1 in achieving a desired degree of protection. Another disadvantage is that future EPA revisions of specific performance standards to reflect new data could result in some confusion and implementation difficulties in the regulated community and the states.

Under this approach, a four-parameter performance standard can be specified today for tightness test devices, but not for other methods. The parameters selected are believed to be achievable by most in-tank release detection systems that are in current use; although some small modification to current operation might be required. The research necessary to establish the technological limits of performance and an evaluation of these systems will be complete before final rules are written. EPA encourages the developers of release detection systems to strive to detect the smallest leaks possible because the standard may become more stringent with time. The data are available to evaluate inventory reconciliation and EPA may develop a four-parameter specification for this method before promulgating final rules. EPA believes that the data are generally insufficient to specify a four-parameter standard for out-of-tank release detection methods at this time. EPA is conducting research on the performance of these devices but does not expect the results of this research to be available before the rules are finalized. Nevertheless, EPA did not eliminate these methods of release detection in the proposal because it wants to maximize the number and variety of detection systems available for use. Out-of-tank methods have detection potential equivalent to or better than the in-tank methods.

In addition, the out-of-tank release detection methods do not generally measure the rate of leakage; they detect the presence of leaked material. Therefore, an on-site calibration may be required if a four-parameter specification, which is volumetric in nature, is chosen.

EPA expects, under this approach, that manufacturers of a release detection method will eventually specify the precision and accuracy of its method in terms of the four-parameter description. Manufacturers or providers of release detection services will be in the position to furnish the performance data for their method that supports their claims. This information will give each owner and operator information for making cost-effective choices. EPA recognizes that any method of unknown performance has the potential for a significant level of false alarms and missed detections.

Today's proposal was developed to establish release detection standards using this third approach. Although preferable in several ways, EPA rejected the first approach at this time because the Agency did not feel that there were sufficient data to assure that all release detection systems meet a single standard. The Agency was concerned that the first approach (a general performance standard) could, at present, be based primarily on the performance of volumetric test methods, yet would apply to all methods. The second approach (certification of methods) was rejected because of the time delays that would be required for formal certification of adequate release detection. This would reverse the trends towards rapid implementation of release detection that are presently being fostered by numerous state and local programs. The third approach (method-specific performance requirements) is being proposed because the Agency believes that enough information is already available, and will be developed before the promulgation of final rules, to enable the establishment of standards that can in many ways limit possible confusion and abuses that might otherwise occur under the more general approach. This method specific performance standard approach would also avoid the delays associated with trying to certify and approve the various alternatives at the national level. It would still allow states and local governments to continue to take their different paths towards release detection as long as the underlying requirements for the methods are observed. Finally, this approach provides flexibility and choice to the regulated community, and also attempts to foster and limit their search to acceptable uses of allowed methods.

EPA recognizes that the third approach is a subset of the first approach. The Agency believes that, ultimately, a single performance standard that can be met by all classes of methods may be possible. However, this was not possible by time of proposal and must wait until the Agency has a better understanding of the behavior of UST releases and the performance of various methods of release detection. Although EPA is not planning to undertake certification of different methods of release detection, research has already begun, and more studies are planned, that will more conclusively reveal the dependability of, as well as the effect of factors controlling the performance of many different release detection methods. Should EPA decide to finalize the requirements for release detection proposed today, the results of much of this work may be provided in the form of guidances that should prove very helpful to state and local communities and to the regulated community in assessing which methods work best under different conditions. EPA will consider, however, selecting the first approach in the final rule, if sufficient data can be developed from ongoing research and public comment.

EPA has set up a testing apparatus in its Edison, New Jersey laboratory that has already begun to assess the performance of the different in-tank monitors under carefully controlled test conditions. The results of these investigations will be made available to both the owners of these commercially available devices, as well as to the public.

In our Las Vegas laboratory, we have begun an evaluation of out-of-tank monitoring methods of release detection and expect those efforts to provide significant additional information concerning monitoring for liquids or vapors in and immediately beneath the UST excavation area. Awareness of the potential need for external release detection should foster rapid development of new technologies and products for release detection. Because the external release detection industry has a relatively limited history, it has few reference standards and no consistent criteria for evaluating these devices. EPA has chosen to use a series of standard laboratory benchtop test methods and specifications to evaluate important operational parameters such as detectable quantities, specificity, response time, accuracy, and precision. Based on these and other data, EPA could determine the capabilities of each of the release detection devices for each of the four parameters in a general performance standard. EPA will report findings of this research as it is completed. Guidance documents may also result from these efforts.

Public Comments. EPA requests public comment concerning the feasibility of the three general approaches towards release detection standard-setting discussed above. Specifically requested are comments and information concerning:

- The appropriateness of the approach selected;
- The need for uniform performance standards applicable to all classes of release detection methods;
- The validity of the specific values of the four parameters proposed for tank tightness testing if these values were applied in a general performance standard to all classes of release detection methods;
- The appropriateness of specific values proposed for the performance standards required of each class of method;
- The need for a more complete performance standard with respect to certain methods; and
- The concept of making the performance standards more stringent as future research reveals how this can be accomplished.

EPA is particularly interested in research results and release detection performance data which permit the choice of a single four parameter general performance standard applicable to all categories of release detection methods or a better method-specific standard for each category of release detection methods. This information is important given the present state of knowledge about, and the rapid development of, the various release detection technologies.

The relationship between concentrations measured at an external leak detection monitoring point and a leak rate measured within the tank is difficult to develop. Mathematical models or the release of a tracer at a tank and measured by the external monitoring system may be used to estimate the performance of the external leak detection method. The Agency cannot provide at this time further guidance on the development of this relationship. Consequently, comparisons of the performance of tank tightness tests, inventory reconciliation techniques, pipe-line monitoring systems and external leak detection systems are difficult at best. The Agency seeks to develop a common performance standard for all leak detection monitoring techniques. Comments are solicited on how this may be done.

2. General Requirements for All UST Systems (Section 280.40)

Today, EPA is proposing to require release detection for all UST systems. In the following sections of the Preamble, the numerous methods and the performance requirements conditioning their use are discussed in detail. However, no matter which release detection method is chosen by an owner or operator, the Agency believes there are some requirements that must be adhered to at all UST systems to ensure that an adequate and reliable level of release detection is provided. Those general requirements proposed for release detection at all UST systems are briefly discussed below.

a. Capable of Detecting a Release From Any Portion of the UST System (Section 280.40(a)(1))

No matter which method of release detection is used by the UST owner and operator, it must be able to detect a release from all the components of the UST system. For example, release detection must be able to detect releases not only from the tanks, but from the underground piping and equipment. As discussed earlier in Section IV of this Preamble, releases from piping are an important source of the reported releases from UST systems and the definition of UST in Section 9001 includes underground piping connected to the tank. Thus, EPA has proposed in 280.40(a)(1) a general requirement that UST owners and operators use a release detection method that includes consideration of all the UST components. A test of the piping and another test of the tanks separately is one such alternative. If wells, barriers, or secondary containment are used, they must address all the UST system. A combination of more than one method can be used as long as each UST system component is monitored by one of the methods.

An associated concern with the question of the capability of detecting releases is the reliability or dependability of the method used. Even if it does address all the UST system components, it could fail to work and not detect a release. Under today's proposal, each UST system would be required to be monitored by only one method of release detection. Because no one method works perfectly, this will result in some releases not being detected. EPA considered requiring the use of more than one method at each site, and thereby providing a redundancy to the release detection that would provide more assurance that, if a release escaped one failed method of monitoring, it would be picked up by the other method before adverse impacts to human health and the environment could occur. This principle is a feature of the California UST program's approach towards release detection of existing UST systems.

The Agency rejected requiring the use of redundant methods of release detection for several reasons. First, as stated previously, most UST systems presently do not have any release detection, and the more widespread use of at least one method for each site is expected to reduce risks markedly, even if these methods do not work perfectly at all sites. The Agency's new UST system requirements and upgrading requirements for all UST systems (discussed later in this Preamble) are expected to dramatically reduce the number of releases that do occur over time, and the potential adverse impacts associated with any imperfections in particular release detection methods thereby will be diminished. Second, today EPA is proposing to allow the use of different methods of release detection, but only following several requirements that must be met to ensure that they are properly used. These performance requirements are intended to make the detection of releases using a single method much more certain. Third,

it is not clear that if redundant methods are used they will pick up the types of releases that might be missed by the first method. For example, a vapor monitoring method could miss the detection of very small releases. However, the added use of various in-tank tightness tests might miss them also if the releases were very small and below the detection thresholds for this method of detection. Finally, with the exception of requiring inventory controls, most existing state and local UST programs do not require redundant monitoring programs at UST sites.

In summary, the Agency was not convinced that the use of duplicative monitoring methods at each UST system would gain significant environmental benefits, in comparison to the possible adverse impacts on program implementation. The Agency specifically seeks comment concerning the proposed approach to require only one method of release detection at each UST system. For example, would a requirement that all environmental monitoring methods be coupled with an infrequent tightness testing program provide significant additional protection to human health and the environment that would justify such an approach?

b. Installation, Calibration, Operation, and Maintenance of Release Detection (Section 280.40(a)(2))

In order for any release detection method to reliably detect releases, it must be installed, calibrated, operated, and maintained properly. EPA believes that any system designed to detect releases within or outside of the UST system must account for various factors and variables, some of which may be unique to the equipment. Improper installation of any method could undermine its designed effectiveness. Improper operation of the monitoring method could also result in faulty measurements or equipment failure. Much of the equipment being developed for UST release detection has electronic or mechanical components that require periodic calibration and maintenance on schedules specific to the monitoring technique and equipment.

EPA believes that the suppliers of these release detection devices are in the best position to understand how they work and to specify proper installation and operation, as well as when and what routine maintenance and service checks for recalibration, operability, and running conditions are necessary. Thus, today EPA is proposing in 280.40(a)(2) to require that all release detection equipment and methods be installed, calibrated, operated, and maintained in accordance with the manufacturer's instructions. An UST owner or operator who purchases and installs a monitoring device must adhere to what is considered good practice for that monitoring approach and equipment. For example, neglect of a system's maintenance so that it is out of operation or in need of recalibration would be a violation of this requirement. A written record of all calibration, maintenance and repair work will be required. This record should at least include the date and nature of work performed.

Because UST release detection is such a new and burgeoning field of technology, the Agency has identified several possible concerns that may be associated with a manufacturer's instructions for the proper installations, calibration, operation, and maintenance of various monitoring methods. With the wide variety of devices that are now available, many techniques are obviously new or in the experimental stage. Also, some of the methods require significant training to install and may require (under the requirements proposed today) some assessment of the site-specific conditions of the UST system. The manufacturer's representative may not be particularly well suited to acknowledge unusual location-specific variables that may preclude the use of the method at that particular site.

One approach to alleviating some of these concerns would be to require that all release detection methods applied externally to the UST system be installed and maintained by someone certified to do such work. A major drawback to this approach is that there do not appear to be any certification programs available or under development. The manufacturers of the various release detection methods do supply some expertise through different levels of training (some more rigorous than others). The Agency presently believes that, while the certification of release detection equipment installers is not presently required, the expertise of these manufacturers and installers will continue to improve rapidly as release detection becomes a more widespread practice. The Agency requests information and comment on the necessity for more than what is being proposed today concerning reliance on the manufacturer's instructions. Specifically, should special skills, judgment, and training be required of installers and operators of the various types of release detection methods so that the performance requirements for the methods being proposed today are met? Should certification of installation be required? Information also is solicited concerning experiences with the operation, use, and maintenance of various methods of release detection.

c. Performance Requirements and Records of Performance Claims (Section 280.40(a)(3))

The confident detection of small releases from UST systems represents a considerable technical challenge and is often, by its nature, a statistical process. The uncertainty in release detection is a consequence of a number of variables including environmental factors, operational practice, and instrumentation accuracy. Testing errors are manifested in one of two ways: (1) Missed detections of actual releases; and (2) false alarms that result in unnecessary release investigations and tank system repairs or replacements.

The detection of a small release is somewhat like trying to find a "needle in a haystack" (or a signal among various sources of noise). For release detection, the "needle" (or signal) is represented by the correct indication of the existence of a release and the "haystack" (or noise) is the sum of the interferences that may hinder or prevent the correct identification of the signal. Based on an analysis of the causes of fluctuations in testing measurements, the performance of different methods of release detection could be specified in terms of the probability of detection (PD) and the probability of false alarm (PFA) for a given leak rate (L). To develop this specification, it would be necessary to develop a history of measurement fluctuations for each method as determined for a range of test conditions. The actual state of the UST system being tested (e.g., whether, and at what rate, it is leaking) would also need to be understood to develop the performance claim. Classes of methods of release detection are not necessarily inhibited by similar sources of measurement fluctuation; for example, internal as well as external methods experience different sources of measurement noise. As a consequence, additional testing by an alternative release detection method should improve the confidence of release detection results.

EPA believes that widespread disclosure of release detection information will afford the UST owner or operator the means for making cost-effective decisions in the selection and implementation of release detection technology. Elements of information that are of particular interest to the owner or operator relate to the performance and operation of the release detection

method. As a consequence, EPA proposes to require UST owners and operators to request, obtain, and keep on file the information relevant to their release detection technology of his choice. The information obtained from the manufacturer should include statements that address each of the following:

- Detectable leak rate, including PD and PFA;
- Test data that support performance claims;
- Equipment operation;
- Equipment calibration requirements; and
- Equipment maintenance requirements.

EPA seeks public comment on this requirement for this information collection and its storage.

d. Release Detection Frequency (Section 280.40(a)(4))

As discussed in more detail in Section V.C. of today's Preamble, in developing today's proposed regulatory strategy, EPA decided to propose the use of "frequent to continuous" monitoring or sampling of release detection as necessary to protect human health and the environment at both new and existing petroleum UST systems. To carry out this portion of the strategy, EPA is proposing a general requirement in § 280.40(a)(4) that all UST systems (both new and existing) be sampled, monitored or otherwise tested for releases at least once every 30 days. All the release detection methods allowed today (and discussed later in this Preamble) would have to be applied at least once every 30 days under this general requirement.

There are two important exceptions to this general requirement. The first exception allows infrequent use of tank tightness testing at existing UST systems for 10 years, if manual (or automated) inventory reconciliation is performed both weekly and monthly. The second exception allows the use of tank tightness testing at new or upgraded UST systems if the tests are conducted at least once every six months along with inventory reconciliation at least monthly. (These exceptions to this general 30-day rule being proposed today, and the reasons for them, are discussed in more detail later in this Preamble.)

In considering the frequency of release detection needed, the Agency examined four different time periods for release detection monitoring: continuously, monthly, quarterly, and semi-annually. As was discussed earlier, given the uncertainty associated with the methods of release detection proposed today, EPA believes that one way to ensure more reliable results is to apply them frequently. Frequent monitoring will provide numerous measurements during the year that can be evaluated to determine trends (if any) as well as to reveal potential problems and malfunctions of the release detection equipment (or practices used).

Other than tank tightness testing, which is generally done infrequently, there do not appear to be any established preferences concerning how often release detection should be carried out, based on a review of the most aggressive state and local UST programs. For example, California opted for a weekly detection sampling under several alternatives allowed for existing UST systems. Florida requires a monthly frequency as a minimum for both new and existing tanks. Several other states appear to emphasize continuous monitoring when environmental monitoring methods are used. No one appears to use a semi-annual frequency for release detection.

EPA's Regulatory Impact Analysis (see Section IX for more details) provided in support of today's proposal does not show distinguishable differences between applying the variously modeled monitoring methods at different frequencies at new UST systems protected from corrosion. With existing UST systems there are some differences modeled between methods used frequently versus infrequently. However, the biggest improvement still appears to come from simply applying release detection in the first place no matter quickly it is reapplied. In general, EPA believes that the more frequently release detection is used, the more reliable release detection results will be, and the less likely releases will go undetected and present risks to human health and the environment.

EPA decided not to propose continuous release detection at all USTs for several reasons. Continuous monitoring is not easily retrofitted to existing UST systems. Also, as described earlier, the continuous monitoring technologies for either outside- or inside-the-tank applications are not yet in widespread use. The Agency is concerned that forcing the use of such technology may be premature until the methods are more proven and available to the regulated community. The Agency also believes that there are many methods of detection available that appear to offer significant promise for release detection purposes, including several manual methods. A continuous monitoring requirement would prohibit this type of release detection. On balance, the Agency has decided the best approach is to allow as much flexibility to owners and operators as is possible while remaining protective of human health and the environment. Most existing UST systems do not yet have release detection and it will take a tremendous effort nationally to have release detection applied at all of them within the timeframes mandated by today's proposal.

EPA decided for several reasons to propose that manual methods, if chosen by the owner or operator, must be used at least once every 30 days, as opposed to every 90 or 180 days. First, as previously explained, the more frequently release detection is correctly applied, the more opportunity is provided for early detection. Release detection applied at least once every 30 days should more adequately minimize the threat to human health and the environment. Second, a significant benefit can result from requiring at least 12 measurements per year by fostering trend analysis, comparability of results, and assuring that the method being used is providing reliable and meaningful results. The 30-day minimum frequency does not appear to conflict with most established state and local UST programs, and should not present an intolerable burden to owners and operators. The proposed approach allows the use of manual methods at a frequency that is believed workable for the regulated community. The additional flexibility provided by the manual methods allowed by the proposed 30-day monitoring requirement gives the regulated community more choice, which is intended to foster more rapid implementation.

EPA requests information and comment on the selection of a 30-day minimum monitoring frequency for all release detection methods, except tank tightness testing. (The frequency allowed for tightness testing coupled with inventory monitoring is discussed in Section VI.D.3.a. of this Preamble.)

e. Site Assessment for External Release Detection Methods (Section 280.40(b))

The performance standards for external release detection methods can only be partially defined because the necessary data does not yet exist to specify the smallest release that can be detected with a high probability of detection and a low probability of false alarm. Today's rule only specifies the release to be detected with the external methods and mandates several performance requirements on how and where different methods can be used (for example, they are required to be

used within or immediately below the UST system excavation area). Because all external release detection methods cannot be used at every site, EPA is proposing that an assessment be conducted to ensure these method-specific requirements can be met and the appropriate external monitoring method is chosen.

Any one of several factors could be present in a particular setting surrounding an UST system that might adversely impact the performance of any external release detection method. Therefore, users of external release detection methods must gather basic information about the status of nearby site conditions to ensure the method of external monitoring selected is appropriate for the site and is designed and installed properly. Today's proposal includes a general requirement in § 280.40(b) for UST owners and operators who may choose an external release detection method to conduct a site assessment. Any external release detection method whose application is determined to be inhibited by some site characteristic may be precluded from use at that site. Without certain basic information, which can only be obtained through a site assessment, the owner or operator could fail to identify factors that may inhibit the functioning of the release detection method. Thus, today's proposal requires that the assessment be sufficient to ensure the specific performance requirements proposed for the particular methods of external detection in § 280.41 are complied with.

EPA believes that using external release detection properly requires basic information about the subsurface within and immediately below the excavation area. Probably no external release detection method can be used at an existing site in a very shallow water table where significant levels of product have already been released. (Of course, corrective action may already be necessary at such site.) Similarly, the selection of a particular method will be influenced by such site information. For example, as discussed in more detail later in this Preamble, today's proposal precludes the use of ground-water table monitoring at locations where the depth to ground water exceeds 20 feet, or the use of vapor monitoring where background concentrations of total hydrocarbons in the excavation area exceed 500 ppm. Therefore, the site assessment requirement proposed today is intended to provide the basic information that is needed to: (1) Help the owner and operator determine whether the use of external release detection is appropriate for the site, (2) help the owner and operator select an external release detection system appropriate for site conditions, (3) aid in designing a network of sensors and wells which will give the greatest likelihood of detecting a release from any part of the UST system, and (4) indicate the potential for possible problems in interpreting data from the release detection system.

Of particular importance in a site assessment are potential sources of product and vapors, such as previous contamination from earlier releases and leaking UST systems at neighboring locations. Also, the site assessment must consider natural and man-made factors in or below the excavation area which will influence the movement of product and vapors (such as product type, water table depth, soil moisture, soil characteristics, excavation zone design, and subsurface utilities intersecting the excavation). EPA has identified several types of information which might be significant during a site assessment:

- UST SYSTEM CHARACTERISTICS
  - Existing UST System or New Installation
    (the excavation zone of new installations can be designed to enhance external release detection; existing sites are not able to be redesigned)
  - Existing Contamination
    (creates background levels in the excavation area against which new releases must be detected)
  - Tank Size and Number
    (a factor in determining how many sensors and wells are needed and where they should be located)
  - UST System Age and Construction
    (a possible indicator of excavation zone design and backfill characteristics)
  - Presence of Overfill Prevention Controls or Containment
    (a factor in sensor and well placement as well as sensor data interpretation)
  - Product Type
    (different products have different properties such as viscosity, density, and volatility which will influence sensor selection and product and vapor mobility)
  - Layout of Tanks, Pipes, and Connections
    (may influence sensor and well placement)
  - Adjacent UST Systems
    (potential interfering or confounding sources; may influence sensor and well placement, as well as sensor data interpretation)
- MAN-MADE SITE CHARACTERISTICS
  - Excavation Zone Design
  - Impermeable Liner
    (possible aid to sensor and well placement in well-designed installations)
  - Backfill Porosity and Permeability
    (influences product and vapor mobility)
  - Interfering Sources
    (possible cause of false positives; must be discriminated against in data interpretation; may influence well and sensor placement)
    - Adjacent Sources
    - Surface Spills
  - Spurious Pathways
    (man-made pathways from within or beneath the excavation area can influence product and vapor movement; must be taken into account in sensor and well placement)
    - Sewers
    - Underground Utilities
    - Pipes
    - Basements
    - Wells
  - Obstacles to Measurement
    - Electrical utility conduits in the excavation area
    - Pavement over the excavation
    - Buildings adjacent to or in the excavation area
  - Transient or steady-state releases
    (transient or intermittent releases such as spills may obscure continuous releases such as tank and piping leaks)
- SITE HYDROGEOLOGY
  (important factors in selecting external release detection systems likely to determine product and vapor movement within the excavation area, sensor and well placement, data interpretation procedures)
  - Vertical Structure
  - Soil Composition
  - Permeability and Porosity
  - Depth to Water (with seasonal variations)
  - Rainfall

The levels and variations in "background" concentrations of product within or beneath the UST excavation area are particularly important to the success of external release detection monitoring. In general, small releases are expected to be detected more

Soil Characteristics
Natural Ambient Environmental Factors
Barometric Pressure Fluctuations (for vapor monitoring impacts)
Wind
Rainfall
Man-Made Site Characteristics
Excavation Zone Design
Liner and Backfill Characteristics
Interfering Sources of Contamination
Spurious Pathways from or beneath the Excavation Zone (utility conduits, etc.)
Obstacles Aids to Measurement (e.g., paved areas over the UST system)

The relative importance of each of the above factors cannot presently be determined, and consequently the exact movement of product and vapor outside of the excavation zone cannot be predicted at all sites. EPA believes that the uncertainties involved in network design are likely to be more important to detection of releases than sensor performance characteristics. EPA solicits comments and information related to external release detection network design and the impact the excavation zone surrounding an UST will have on product and vapor movement.

At least four different approaches to the interpretation of data from release detection methods can be considered. The first is to determine a release from the appearance, taste, odor, or samples collected from observation wells. In this case, the decision that a release has occurred is left to the human observer and may be somewhat subjective. The second approach involves the statistical comparison of data collected at different times at one monitoring point, or at the same time from several monitoring points; in this case the decision that a release has occurred is made by statistical hypothesis testing. The third approach is to plot, over time, the measurements from a monitoring point to look for trends in the data. The fourth option is to establish alarm or action levels so that observation of values over this limit would immediately trigger some type of action. The action could range from making additional measurements to excavating the tank.

Incorrect decisions from any one of the four methods can be described as either false positives (concluding that a release has occurred when no release exists) or false negatives (concluding that no release has occurred when in fact one exists). False positives and negatives from sight, taste, or odor will be influenced by the sensitivity of the observer's senses and by his subjective decisions. The number of false positives and negatives from the other three options depends on the decision values chosen (statistically significant variations, changes in the rate at which measured concentrations increase, or the action level selected) and on the sampling frequency. Depending on the selected action level and frequency of sampling, the number of false positives can be progressively reduced while the detection of small releases becomes progressively more difficult. The number of false positives has consequences to both the tank owner and to the regulator, who must decide what action to take when the detection system indicates that a release may have occurred. The number of false negatives also is important, since adverse environmental impacts will generally increase when a release continues undetected. EPA solicits comments, including relevant data and recommendations, concerning methods of data analysis for external release detection systems.

3. Requirements for New UST Systems (Section 280.41)

Today EPA is proposing in 280.41 to require that all new UST systems be provided with release detection before they begin operation. The proposal allows UST owners and operators to choose from a wide variety of different release detection methods provided that they meet the requirements for each method. Methods allowed include:

- Tank tightness testing with monthly inventory reconciliation;
- Vapor monitoring within the soil gas of the excavation area;
- Monitoring for liquids on the ground water;
- Monitoring for releases in an interception barrier;
- Automatic monitoring of product level and inventory control;
- Interstitial monitoring between the UST and a secondary barrier; and
- Other methods approved by the implementing agency.

These methods and the proposed performance requirements and limitations are discussed below. Any special conditions for use of these methods for hazardous substance UST systems is also discussed below.

a. Tank Tightness Testing and Inventory Reconciliation Controls (Section 280.41(c))

EPA is today proposing to allow the use of tank tightness testing and inventory reconciliation control (or a method of equivalent performance) in combination as one method of release detection at new petroleum UST systems. Each of these two release detection components, and the requirements proposed concerning their use, is discussed separately below.

(1) Tank Tightness Testing (Section 280.41(c)(1)). Tank tightness testing is the most commonly used procedure for determining whether an UST system is leaking. A wide variety of tightness testing techniques are available, including many that are described in the report, *Underground Tank Leak Detection Methodology: A State-of-the-Art Review* (EPA 1986). All these techniques test the integrity of the tank; some test the integrity of the piping. Owners or operators who choose to use a method which only tests the tank must use another technique for testing the piping.

Tank testing techniques can be classified as either volumetric or non-volumetric. Volumetric tests identify whether a system is tight by measuring product level changes over time and converting these measurements to a flow rate based on tank geometry. Non-volumetric tests measure something other than product volume changes and, therefore, do not as easily define a flow rate. They simply indicate whether the tank or piping is leaking. These include ultrasound techniques and trace gas detectors.

The procedures for conducting volumetric tests generally involve filling the tank with product to a specified level and measuring the change in this level over a period of time. In addition, product temperature is measured so that the effects of temperature on product volume can be subtracted from the estimated product level measurement. If the estimated change in product level exceeds a certain amount, the system is judged to be non-tight. The various volumetric techniques differ in the method for measuring and recording the liquid level changes, in the temperature measurement and compensation procedures, in their data analysis methods, and their detection criterion.

There are a wide variety of volumetric tank tightness test methods currently available. All test methods require that dispensing operations at the UST be curtailed during the test. Some test methods overfill the tank, while others do not; some test the entire system, including piping, while others test either the tank or the piping. The most common test methods require extensive preparation to conduct a test, have a high cost per test, and as a consequence cannot be used frequently. More

recently developed systems can be permanently installed in the tank. These systems require initial capital investment, but can perform frequent tests with only minimum preparation and interruption to dispensing operations. These latter systems are the automatic product level monitoring systems that have a precision test mode for the conduct of a tightness test. (They are discussed in more detail in a later part of this section of the Preamble.)

The performance of the volumetric test methods is being evaluated in the EPA's research program being conducted in Edison, New Jersey and the test results will be available before the rule is finalized. In addition, the technological limits of volumetric tightness tests will also be determined. As noted earlier in this preamble, preliminary results suggest that reliable detection of leak rates at 0.05 gal/hr may be scientifically possible for tanks whose capacity is less than 12,000 gal.

A major concern with this method of release detection is that several key factors can significantly undermine the test's accuracy in actual practice. A review of several of these techniques, prior to EPA's National Motor Fuel Tank Survey in 1985, revealed that many of the leading commercially available procedures do not appear to adequately control these factors. Also, the way these tests are carried out at the site as well as their data analysis procedures, can provide other sources of operator-induced errors. Because tank tightness testing cannot be performed frequently, EPA considered not allowing the use of this method. However, the Agency has concluded that, because this method can provide reasonably accurate, though infrequent "checks" for releases, it should be allowed for release detection purposes, if it is used in compliance with several proposed performance requirements and limitations:

- The test must be used in combination with daily inventory measurements and monthly reconciliation techniques (or a test of equivalent performance);
- The test must be conducted at least every six months; and
- The test must be capable of detecting a release rate of at least 0.10 gallons per hour from the UST system, determined with a probability of detection of 0.99 and a probability of false alarms of 0.01.

Each of these limitations are discussed in more detail below.

(a) Tightness Tests Must Be Used in Combination With Inventory Reconciliation Techniques. As discussed previously in this Preamble, EPA has decided to propose the use of "frequent to continuous" release detection as part of the national strategy to regulate new UST systems. Numerous advantages were identified that caused the Agency to propose, at a minimum, monitoring for all new UST systems once every 30 days. However, the Agency believes it is unrealistic to require tank tightness testing that often. Tightness testing, as currently practiced, is a fairly expensive one-time procedure that requires the UST system to be out of service for a number of hours prior to and during the test. Because monthly testing is infeasible, the Agency is proposing that it must be combined with inventory reconciliation techniques (discussed in the next section of this Preamble) before it can be used to comply with today's release detection requirements for new UST systems.

The tank tightness testing technique is expected to be able to detect releases that may be too small for inventory reconciliation procedures to identify. In contrast, the inventory reconciliation is intended to address today's general requirement for frequent monitoring through the requirement of daily measurements reconciled at least monthly. Thus, the inventory reconciliation portion of this combined method of release detection is for use between the infrequent tightness tests required today.

The Agency considered allowing tightness testing alone for release detection. However, EPA believes that tightness testing can only be used practically on a relatively infrequent basis because of the cost and difficulty to the owner and operator associated with its use. Infrequent testing alone could provide too much time for the UST to leak in between the tests. Inventory reconciliation is intended to ensure that significant releases do not go undetected between tightness tests.

(b) Tightness Tests Must Be Conducted at Least Every Six Months. As discussed earlier, EPA has proposed a general requirement that all new UST systems be provided with a method of release detection that conducts a test at least once every 30 days. EPA is also proposing to allow the use of tank tightness testing at new UST systems if it is conducted at least once every six months and is combined with daily inventory measurements and monthly reconciliation techniques.

EPA's review of the various schedules for tightness testing of new petroleum UST systems currently used in several states reveals testing frequencies between one to five years depending on the age of the UST system. Most states that allow tightness testing for new UST systems protected from corrosion require it be used with inventory reconciliation, as well as to be performed at a minimum once every four or five years. Thus, the standard proposed today is much more stringent than what has been established for new petroleum UST systems in several states (such as Wisconsin, Rhode Island, Maryland, and Delaware). This more frequent standard was developed in keeping with today's proposed general approach to require more frequent monitoring in order to detect releases sooner. An important consideration in developing this proposed frequency was the Agency's uncertainty about the long-term use of inventory controls for release detection purposes. (Discussed in more detail in the next subsection of this Preamble.)

EPA specifically solicits comment on the appropriateness of a semi-annual testing frequency at new UST systems. Information indicating that the performance of new UST systems protected from corrosion does not warrant semi-annual testing could cause EPA to require less frequent tank testing in the final rule (as do many established state UST programs). Another key consideration in the decision concerning the frequency of tank testing is the effectiveness of inventory controls in detecting leaks. If a new UST system is provided with automated inventory control and reconciliation equipment, should EPA reduce the required frequency of tank tightness testing? On the other hand, to be consistent with its strategy to require "frequent to continuous" monitoring, should EPA allow tightness testing but require that it be used every 30 days, with the expectation that more practical, less expensive technologies may be developed that could be applied with such frequency in the future?

(c) Performance Standard for Tightness Tests. Today's proposal specifies the performance standard for tightness testing in terms of the minimum release to be detected (0.10 gallons per hour), the probability of detection (P_D=0.99), and the probability of false alarm (P_{FA}=0.01). A complete performance standard is proposed for tightness testing as a consequence of the advanced understanding of this technology. This exactness and reliability is also important considering the more infrequent testing schedule being considered for this test method. This standard applies to the testing of both the tanks and the underground piping.

As described earlier, a number of commercial tank testing techniques are currently available. Although the

commonly used NFPA criterion is 0.05 gallons per hour, and vendors of available testing techniques claim that their methods can reliably detect such a small release rate, at this time the Agency has not been provided with evidence that this standard is being reliably met by any device now in practice. EPA has initiated research that will evaluate the performance of many of the commercially available methods. This program is described in *Protocol for Evaluating Volumetric Leak Detection Methods for Underground Storage Tanks* (1986).

EPA has field experience with tank tightness testing. This experience is described in *Underground Motor Fuel Storage Tanks: A National Survey* (1986). The national survey experience suggests that the leak rate capable of being detected by current practice is higher than 0.05 gal/h. In the survey, EPA carried out a nationwide test of over 450 UST systems and was able to reliably detect releases of 0.1 gallons per hour with a $P_D=0.95$ and $P_{FA}=0.05$. The Agency used a modified, commercial tightness testing procedure that emphasized numerous quality control/assurance procedures and was supported by carefully designed statistical analyses. These tests were conducted with skilled and experienced practitioners.

EPA rejected the widely used 0.05 gal/h criterion in developing today's proposal because the Agency presently believes that this standard is not being reliably achieved with the most common tank sizes in use today (4,000 to 12,000 gallons capacity). Consideration was given to setting today's performance standard at 0.20 gallons per hour. However, EPA technical staff and the experience of the practitioners who executed the national survey have indicated that, if presently available procedures and practices were modified and improved, they could achieve a reliable detection of leak rates smaller than 0.20 gallons per hour.

EPA believes that its ongoing tank test evaluation program will result in significant new information that will result in dramatic improvements of current practice over the next few years. With significant improvements in today's practice, EPA believes many testing procedures and techniques should be able to reliably detect a release rate between 0.05 and 0.10 gallons per hour in the tanks that are widely in use today. Although at the present time quantitative data is unavailable concerning the achievement of the above performance levels at larger tanks (e.g., greater than 20,000 gallons in volume), EPA doubts that those levels can be achieved at the larger tanks.

Testing methods are affected, to varying degrees, by factors such as temperature changes, trapped vapor pockets, condensation and evaporation, and tank-end deflection. Some of these factors can be controlled or minimized by proper design of the equipment and test procedures. The degree to which any of these factors are in effect during a given test will also vary between different tanks, and even between separate tests on the same tank. (In the national field survey, at some of the UST systems, crews repeated tests at the same tank during the same day as well as at a different time several days later.) The ability of the available test methods to compensate for these variables is not yet well known and there is an important reliance on the test operator to recognize and adjust for these factors as they occur. These factors must be monitored very closely because even the slightest changes can either mask leaks that exist, or mimic a leak where none exists.

Volatile liquids such as gasoline, jet fuel, and many solvents are sensitive to temperature variations. For example, a temperature decrease of 0.02 °F in one hour within a 6,000 gallon tank containing gasoline would cause a decrease in the volume of 0.084 gallon. This change exceeds the 0.05 gallon per hour rate now commonly used to indicate a leak (NFPA, 1983). Temperature changes of this magnitude within a tank are common. One reason for this is that new product added to a tank is generally at a different temperature than product already in the tank. After product is added to the tank, it takes time for the tank contents to mix and achieve a nearly static condition. Even as the tank contents settle, the cooler, heavier product tends to settle towards the bottom of the tank, while the warmer, lighter product locates nearer the surface. In other words, the product tends to settle in layers, with a slight temperature drop from the surface to the bottom. This process is called stratification. With stratification, the rate of change of the temperature, and therefore the volume, may vary through the depth of the product.

Vapor pockets within the tank pose serious problems for tank tightness tests that require overfilling of the tank. These pockets are often present at high spots of sloped tanks or in protrusions, such as manways in the tops of tanks. These pockets of trapped vapor expand and contract with changes in temperature and barometric pressure. Furthermore, their size is difficult to estimate because they cannot be seen. Therefore, when present, they must be eliminated for a valid volumetric test to be performed.

Tank-end deflection may also affect the results of a tank tightness test. When a tank is filled in order to perform testing the ends of the tank may deflect outward. The technician performing the test must be aware of this phenomenon and apply the necessary adjustments or corrections to ensure accurate results.

Finally, evaporation and condensation activity inside the tank can affect test results under certain conditions.

Volumetric tests generally cannot be accurately applied to large tanks. The 0.05 gallon per hour criterion was originally developed for a 6,000 gallon tank. Most testing practitioners will not apply their tests to tanks greater than 20,000 gallons. This is due to the increasing effect of many of the variables which cloud the accuracy of this type of test.

Automatic product level monitors that have the capability of compensating for temperature fluctuations can be used to conduct a precision tank tightness test and, if used semi-annually with monthly inventory controls for release detection purposes, they must meet the same standard as other volumetric tank tightness test methods. As with other volumetric tests, tank operations must be curtailed during the test. The direct access of automatic in-tank equipment offers several advantages over other tank tightness methods. First, the tests can be conducted frequently without expense and without having a significant impact on dispensing operations because the systems are permanently installed in the UST. Second, these methods maximize the available test time because the set-up time can be made to be minimal.

EPA recognizes that the performance standard proposed today for tank tightness testing is challenging, but preliminary results from the EPA research program suggests that this standard is achievable. However, more frequent data sampling, a longer test time, improved compensation schemes, and better analysis algorithms might be required of available methods to achieve it.

(2) Inventory Reconciliation Controls (Section 280.41(c)(2)). Inventory reconciliation techniques detect releases by reconciling product deliveries, withdrawals and inventory remaining in the UST system each day to identify shortages. A large shortage in a single day or small persistent shortages over a month can indicate a release of product.

As discussed previously in the section on tank tightness testing, today's proposal only allows the use of tightness testing to detect releases if it is used with inventory reconciliation. Monthly inventory reconciliation is proposed as the means for detecting any significant releases that could occur between the more accurate, but less frequent, tightness tests.

Major concerns have been identified concerning the use of manual inventory control as a release detection method with new petroleum UST systems. Manual inventory control depends on considerable operator involvement, and with it the attendant opportunity for human error. In fact, several studies have shown that inventory control records often contain errors that diminish their utility for release detection. In one EPA study, *Underground Motor Fuel Storage Tanks: A National Survey* (where survey participants were required to supply one month's worth of inventory data on forms supplied by the EPA), 80 percent of the participants initially supplied incomplete or incorrect inventory data. Some of these records were corrected or completed through intensive follow-up contacts with EPA, and 50 percent of the inventory records were eventually complete enough for analysis. The Agency has serious reservations about depending on a long-term basis on manual inventory control for release detection because of this reliability issue. The Agency solicits comment and information on this issue.

Inventory reconciliation is a common and highly encouraged practice in the petroleum industry. Inventory is reconciled for management of the inventory, reorder policy, control functions and detection of large uncontrolled releases. Most state and local regulations require it as an element of their release detection strategy because it is inexpensive and can be done as part of the normal day's activities. Product deliveries, withdrawals, and tank inventory are reconciled daily to identify shortages or overages. Persistent shortages (or overages) over one or more months suggest the possibility of uncontrolled release of product from the UST system. Daily product level and dispensing pump measurements are required for meaningful inventory reconciliation. Product level measurements are made manually with a calibrated stick, or automatically with an in-tank product level monitor. The precision of either measurement can be approximately one-eighth inch. The automatic product level monitor has several important advantages over manual stick measurements. First, the measurements are not subject to operator error which could arise from misreading or improperly using the stick. Second, a more sophisticated data collection and analysis approach can be accommodated with the automatic monitors.

The performance of inventory reconciliation has not been articulated. The major sources of interference "noise" that limit the detection of releases using this methodology are:

- Withdrawal volume;
- Delivery volume;
- Product expansion or contraction;
- Structural deformation of the tank;
- Pilferage; and
- Product level measurement.

The first five sources of noise are systematic and are the largest sources of error in reconciling inventory. The fluctuation in product level measurement is random if the stick measurements are properly executed. Delivery uncertainties of several hundred gallons can occur. Withdrawal errors produced by pump calibration errors can be large. Pilferage will obviously affect the accuracy of the reconciliation. Product temperature changes and structural deformation can be large enough to be sensed by the stick measurements if the stick measurement is made shortly after filling a tank.

There are many means to reconcile inventory data. Some methods attempt to compensate for the errors and claim greater accuracy than the traditional method of reconciliation. Several different detection criteria have been developed to define a leak. The volume threshold is the most commonly used. A volume threshold is established and a leak is declared if a monthly shrinkage crosses a threshold. Thresholds of 100 to 200 gallons are typical. Another detection criterion requires that the difference in the number of overages or shortages each month exceed a specified threshold before a leak is suspected.

The primary limitations proposed today for the use of inventory reconciliation techniques for the purpose of release detection at new UST systems are:

- Inventory reconciliation (or another test of equivalent performance) must be used in combination with tightness testing;
- Inventory reconciliation controls must include reconciliation of product inputs, withdrawals and stored inventory each operating day so that a release greater than 5 percent of the flow through on a weekly basis or 0.5 percent of the flow through on a monthly basis will be detected;
- The height of the stored inventory must be measured to a 0.125 inch accuracy;
- Inputs must be reconciled with delivery receipts by measurement of tank inventory prior to and after delivery;
- Deliveries must be made through a drop tube;
- The product dispensing must be metered and recorded within an accuracy of 5 cubic inches for every 5 gallons of regulated substance withdrawn; and
- The inside of the tank must be checked for the presence of water at least every 30 days if any portion of the tank is in ground water.

Each of these performance requirements and limitations are discussed below.

(a) Inventory Reconciliation (or Another Method of Equivalent Performance) Must Be Used in Combination With Tightness Testing (Section 280.41(c)). Today's proposal requires that inventory reconciliation be used together with semi-annual tank tightness testing. Although inventory reconciliation is concerned with the measurement of product volume in the tank, it is generally believed to be less accurate than tank tightness testing. However, inventory reconciliation can provide a nearly continuous method of release detection once a base analysis period is obtained. Typically, the reconciliation is done monthly using 30 days of data. Therefore, a well-designed and properly executed inventory reconciliation test is believed to complement the more accurate but more infrequently done tightness tests.

Today's proposed rule also allows for any method or combination of methods of equivalent performance to be substituted for inventory reconciliation providing that the method(s) perform a tank test with the same frequency, tests the entire tank system (including the piping), and has the same or better performance. For example, an automatic in-tank volumetric level testing conducted weekly and monthly combined with an automatic pipe monitoring system would be an example of a substitute system, if the performance of these tests are equal to or better than the performance required of inventory reconciliation (discussed below).

(b) Inventory Reconciliation Performance (Section 280.41(c)(2)). Today's proposal sets performance requirements for inventory

reconciliation that generally agree with the American Petroleum Institute's Recommended Practice #1621, which provides detailed guidance on inventory reconciliation practices. Product inputs, withdrawals and stored inventory must be reconciled each operating day. The reconciliation must be accurate enough to identify an inventory loss of five percent of product volume flow through on a weekly basis and 0.5 percent of flow through on a monthly basis. The Agency is not proposing detailed requirements on inventory reconciliation procedures and report formats.

The required reconciliation accuracy of 0.5 percent of flow through on a monthly basis that is being proposed today is an API #1621 recommended practice and is equivalent to a 90 gallon loss in a typical monthly flow through of 18,000 gallons. Even though the error in one day may exceed this value, when 30 days are considered, the errors in individual days tend to balance out. EPA believes that this monthly standard can be met if the inventory control procedures are followed consistently. Equipment is commercially available that can accomplish this automatically. The 5 percent of weekly flow through loss standard is similar to the California weekly loss standard and is intended to provide early warning of major losses. Five percent of the weekly flow through for a typical monthly flow through of 18,000 gallons corresponds to approximately 200 gallons. The Agency included this requirement because it believes that the additional effort required to compute a weekly loss is justified by the additional confidence that large releases will be detected quickly.

The Agency is not aware of any research that suggests an optimum weekly loss standard. However, EPA believes that a more restrictive weekly loss standard (e.g., 2 percent of the flow through) would result in excessive false alarms because of the unavoidable inaccuracies associated with inventory measurements. On the other hand, the Agency believes that a less restrictive weekly loss standard (e.g., 10 percent of the flow through) would allow large releases to go undetected for too long. The 5 percent standard is believed to be achievable with consistent adherence to the industry-recommended inventory reconciliation practices. EPA also considered including a daily loss standard in today's proposal, but concluded that the interpretation of a single day's reconciliation is better left to the operator's judgment because of the many potential sources of error.

The probability of detection and the probability of false alarms for the above detection thresholds are not known, but sufficient data exists to evaluate and amend performance of the proposed inventory reconciliation performance requirements before the rule is finalized. At present, EPA is proposing to follow recommended industry practices, but requests comments and information on this approach.

(c) Stored Inventory Measurement Accuracy (Section 280.41(c)(2)(ii)). Today's proposal requires that the height of the stored product be measured to a 0.125 inch accuracy. The Agency believes that a major source of error in manual inventory control practices involves measurement of the height of the stored product. There are many reported cases of operators using improperly calibrated or damaged gauging poles, of operators neglecting to take tank level readings during bad weather, and of miscalculation of the stored volume from the tank level reading. Most manual gauging poles are calibrated in 0.125 inch increments. Therefore, if the operator adheres to standard industry practices in the gauging procedure, greater accuracy can be achieved through careful measurement practices. Although today's proposal does not require automatic level sensing equipment, the Agency believes that they too can significantly reduce the incidence of errors in inventory control.

(d) Delivery Reconciliation (Section 280.41(c)(2)(iii)). Another limitation in today's proposal is that product deliveries must be reconciled by measuring the tank before and after each delivery. The Agency is concerned that neither delivery receipts or tank level readings taken after delivery are consistently accurate. The Agency is therefore requiring that they be compared to each other to increase confidence that actual deliveries are accurately recorded.

(e) Drop Tubes (Section 280.41(c)(2)(iv)). Today's proposal requires that deliveries be made using a drop tube that extends to within one foot of the tank bottom. This tube is usually attached to the tank's fill pipe and minimizes the surface waves during product deliveries. A tank that is not equipped with a drop tube cannot be accurately measured for inventory for several hours after a delivery, making it difficult to reconcile the delivery. This appears to already be a common practice because many existing UST systems are reported to be already equipped with drop tubes.

(f) Dispensing Meters (Section 280.41(c)(2)(v)). Today's proposal requires that product dispensing be accurately metered. Accurate metering of product withdrawals is essential to inventory control. The Agency chose the National Conference on Weights and Measures standard of 5 cubic inches for every 5 gallons of product withdrawn. This is equivalent to 0.6 percent; which is the acceptable tolerance level for retail gasoline dispensing meters that retail gasoline facilities are already required to meet. However, many UST systems, such as those used for fleet service or farm use, are not metered this accurately. The Agency recognizes that some owners and operators if they choose this release detection method may have to install dispensing meters, or calibrate their existing meters to meet this requirement.

(g) Water Detection (Section 280.41(c)(2)(vi)). Today's proposal also requires that the operator check for water in the tank at least every 30 days if any portion of the tank is located in water. Ground water can intrude through a hole into a tank if it is at least partially below the water table. Petroleum products are less dense and immiscible in water, so incoming water will appear at the bottom of the tank. Generally, with manual inventory controls, the operator can apply a water-sensitive paste to the end of the gauge pole to determine how much water is in the tank. (Automated inventory measuring equipment is also available that can measure the presence and level of water in the bottom of an UST system.)

Water can also enter the tank through other means such as product deliveries, but the presence of (or rapid increases in) water in a petroleum UST system could result from ground-water intrusion and may need further investigation if the UST system is in ground water. Checking for water in the tank is recommended by the American Petroleum Institute's Recommended Practice 1621 as part of the daily inventory control practice. However, the Agency believes that for release detection purposes, only those tanks that are in ground water need to be checked for water, and that the inspection interval need only be every 30 days. A recent national EPA survey of motor fuel tanks found that approximately 20 percent of the UST systems are reported to be at least partially located within ground water.

(h) Issues for Public Comment. EPA is seeking public comment and performance-related information regarding the use of manual inventory

reconciliation for release detection. EPA is particularly interested in receiving comment on the appropriateness of the limitations proposed for the use of the method. Because of the limited performance data concerning the method, EPA has had to develop today's proposal based on partial information. Therefore, EPA is specially seeking information regarding the field performance of manual inventory controls or the results of any relevant performance evaluation studies. The Agency is also interested in receiving comment and information concerning automatic inventory measurement/reconciliation equipment. The Agency is considering whether it should be required in lieu of allowing the use of manual methods of inventory control with tank tightness testing at new UST systems.

In addition to these general areas, the Agency is interested in comments concerning three specific issues. The first of these concerns the accuracy requirement for inventory reconciliations. Accuracies of 5 percent of flow through on a weekly basis and 0.5 percent on a monthly basis are required in today's proposal. Should these accuracy values be increased or decreased? Should they be expressed as single values or as fractions of the tank volume instead of fractions of the flow through? Should there be an accuracy requirement for a single day's reconciliation?

A second specific issue that the EPA is interested in receiving comment on is the use of inventory control without metered dispensers. A 1984 EPA Chemical Advisory provides an inventory control procedure for non-metered tanks. In this method, the tank level is recorded using a gauge pole before and after each withdrawal and delivery. Changes in the tank level are estimated by comparing level readings made immediately before a withdrawal to the reading after the previous withdrawal. These differences can be accumulated over a period of time to calculate a loss or gain. The Agency did not allow this method for petroleum UST systems in today's proposal because it does not know of any criteria that can be used with this method to indicate a release. The Agency also does not have any way of confirming the accuracy and reliability of this method and seeks comment on the performance of this type of inventory control method and whether it should be allowed in the final regulations.

EPA is also interested in receiving comments on whether inventory controls should be required at all UST systems (where it is feasible to apply) before and after UST owners and operators phase in release detection over a 3- to 5-year period (the phase-in of release detection was discussed earlier in this preamble. As discussed earlier, EPA has identified several concerns with the current practice of manual inventory controls and is doubtful that it can be meaningfully applied on a widespread basis without significant increases in training and technical assistance. Even though numerous state UST programs require inventory control, today's proposal only requires that it begin within 3 to 5 years, and only if tank tightness testing is chosen as the method of release detection. EPA believes that application of the general phase-in schedule to include inventory controls will provide the regulated community with sufficient time to develop and implement the expertise and training necessary to ensure manual inventory requirements are carried out in a reliable way. EPA considered requiring a more rapid application of inventory controls at all UST systems (where it is feasible) than is proposed for the other methods of release detection, but is concerned that widespread implementation problems will result because of the labor-intensive nature of the method and the significant improvements and training that will be necessary to ensure sound practices are followed. The Agency solicits comment and information on this issue, including whether inventory controls would provide significant benefits and improvements in environmental protection if required at all UST systems where it is feasible.

b. Testing or Monitoring for Vapors Within the Soil Gas of the Excavation Area (Section 280.41(d))

Liquid hydrocarbon and other volatile products will vaporize when released into the soil surrounding the UST system. Today's proposal in 280.41(d) allows the use of a monitoring method that samples the soil gas in the excavation area surrounding the UST system to detect the presence of vapors that result from such releases.

The use of soil vapor monitoring for UST system release detection is very recent. Therefore, only limited information and experience exists with vapor sensors used in this capacity. However, vapor monitoring has been used for other purposes for a number of years, such as for industrial safety and ground-water plume mapping. As a result, a wide variety of vapor detection devices are available.

Commercially-available, manually operated devices use several operating principles, including flame ionization, gas chromatography, infrared absorbtion, and photo-ionization. Permanently installed continuous sensors use several operating principles, including catalytic combustion, diffusion, solid state semi-conductors, and product permeable materials. Although there is little documented performance data for the wide range of vapor detection equipment that is commercially available for release detection, many of these devices are expected to be able to detect very small concentrations. (EPA has already begun a survey of available methods to validate information obtained from vendors.) For example, portable gas chromatographs can detect and identify compounds in the parts per billion range; photo-ionization devices in the parts per million range. The limiting factor in the systems' accuracy is more likely to be the design and placement of sensors in wells so as to intercept vapors, and the capability of the release detection equipment to interpret correctly the same readings, rather than the sensors' sensitivity in detecting them.

In evaluating the use of this method, the Agency had to consider the present lack of information concerning sensor capabilities and the characteristics of vapor transport in the unsaturated zone under various conditions. Likewise, the Agency had to consider the uncertainties associated with interpreting the meaning of vapor gas measurements at sites where significant previous contamination levels exist in the form of background interferences. Although EPA is currently undertaking several studies to better characterize these processes, only preliminary results will likely be available in some areas by the time EPA develops a final rule. Thus, the Agency considered rejecting the use of this method for release detection purposes until many of these technical issues are settled.

However, EPA has concluded that this method of leak detection may be usefully applied in a manner that will detect releases if used within certain limitations. Limited data based on practical field experience suggests that the vapor levels in the excavation zone will rapidly and dramatically increase when a release of a highly volatile liquid (for example, gasoline) occurs. One study found that when fuel samples were introduced at 10 feet below the ground surface, trace quantities of vapors were detected at the surface within 10 hours. Vendors of these devices widely claim that vapor levels jump to 3,000 to 12,000 ppm when

gasoline releases into the excavation area. Therefore, today's proposal provides several important limitations on the use of this method that, when combined with corrective action of releases that are detected in the UST excavation area, are expected to effectively minimize potential adverse impacts to ground water.

Several primary limitations on the use of soil vapor monitoring for release detection are being proposed today:

- The backfill must be sufficiently porous to allow diffusion of vapors readily into the excavation area;
- The released liquid must be sufficiently volatile to result in detectable vapor levels;
- The measurement of soil gas contamination must not be rendered inoperative by ground water, rainfall, or flood conditions so that releases cannot be detected for more than 30 days;
- The level of background vapor contamination must not interfere with the detection of releases from the UST system, and cannot be greater than 500 ppm of total hydrocarbons as measured in the soil gas;
- The monitoring equipment must be capable of being pre-set to detect the type of regulated substance stored in the tank system at significant levels above background contamination in the excavation area;
- The monitoring well network (including the number and location of monitoring wells) must be designed to detect a release from any portion of the UST system in the excavation area, and be based on an assessment of the conditions immediately surrounding the UST system; and
- All monitoring wells open to outside access must be clearly marked for their purpose and secured from unauthorized entry.

Each of these limitations is discussed in more detail below.

(1) Porous Backfill in the Excavation Area (Section 280.41(d)(1)). Today's proposal limits the use of this method of release detection to UST excavation areas that have sufficient porosity for the diffusion of vapors from releases to the monitoring wells in the excavation area. As previously mentioned, EPA has recently begun the study of characteristics of vapor transport in the unsaturated zone. However, rapid transport of vapors would occur in many of the types of backfill that are used when proper installation procedures are followed (e.g., use of pea gravel, sand, crushed rock). Therefore, this proposed limitation is intended to exclude the use of this method at existing UST systems where soil removed from the excavation area was simply placed back at the time of installation, particularly if less than the most porous types of soil were used. The Agency is less confident that vapor detection will work as reliably under conditions where the soil gases might be just as likely to diffuse into the surrounding soils as into the other parts of the excavation area itself; such as excavation areas refilled with native surrounding soils or at sites with previous man-made disruptions (for example, pipeline conduits and foundations) within or beside the excavation area. The Agency suspects that many older installations will not be able to meet this limitation. Newer installations will generally be surrounded by porous soils if recommended good installation practices were followed.

(2) The Volatility of the Liquid Stored (Section 280.41(d)(2)). Liquids volatilize at different rates and, thus, intrinsically make available different concentrations of vapor gases for detection when a release occurs. Gasoline and many other petroleum products and solvents contain highly volatile components that are expected to produce high levels of vapors in the excavation area as a result of a release. Other substances, such as diesel fuels or heating oils, have a much lower volatility and will produce a much lower level of vapors as a result of a release. Today's proposal includes a general performance standard that limits the use of this method to UST systems storing liquids that are sufficiently volatile to be detected by the device and sampling method employed.

Sampling of gases may be either active (e.g., a soil gas sample is sucked through tubing to a central detection device) or passive (the gas travels unassisted based on the natural rate of diffusion through the excavation soil to the sensor). Thus, passive systems of vapor detection are expected to be less likely to meet this criterion, particularly with the less volatile substances (e.g., diesel fuels), than the more active sampling devices that mechanically draw soil gases towards the sensors. In general, the passive detectors may also need to be set to detect lower concentrations of vapors than the active sampling sensors, and also may need to have more monitoring sensors to be able to detect the volatilized gases from a release into the excavation area.

EPA expects that the determination of whether releases of the product stored in the UST will be reliably detected by a particular network of sensors is necessarily a site-by-site determination and cannot be specified for all sites in regulation. The volatility of the substance, the type of backfill in the excavation area, the type of sampling device used (active or passive), as well as the location and number of wells employed must all be considered together to determine if this limitation can be met at the site.

Today's general standard is intended to provide state and local governments and the regulated community the flexibility to design systems that are appropriate to the particular excavation area, the tank system configurations, and the substances stored. EPA has initiated several studies that will more completely characterize these factors and how they need to be considered. If the Agency decides to allow this method of release detection in the final rule, guidance will be provided on how to assure this limitation is met.

(3) Avoidance of Other Interferences (Section 280.41(d)(3)). EPA is today proposing a general performance standard that requires vapor monitoring be used only where ground water, rainfall, or soil moisture will not render the monitoring technique inoperative so that a release could go undetected for more than 30 days. This limitation is intended to ensure that the owner and operator applies this method at a particular site only after determining there are no interferences that could render this method of monitoring useless for release detection purposes over extended periods of time. Vapor monitoring sensors must not be located in the excavation area where they would be subject to inundation by a high water table. Also, at sites located in areas prone to flooding for extended periods of time, this method would not work and is insufficient for release detection purposes. A site located in a 25-year flood plain, for example, may not be able to make use of this method of detection if it is located in the excavation area such that it could be inundated by these flood waters for more than 30 days. Finally, in locations where heavy and continuous levels of precipitation are common, the type of monitoring method chosen, including the location of wells, would have to be able to detect soil vapor contaminants under these conditions at least every 30 days. The adequacy of detection performance under frozen topsoil conditions should also be considered.

(4) Background Contamination and the Capability of Vapor Monitoring Equipment (Section 280.41(d)(4)). Today EPA is proposing to limit the use of external vapor monitoring methods to sites that have relatively low levels of background concentrations of hydrocarbons to prevent an excessive number of false alarms and false

negatives (leaks not being detected). Previous contamination from surface spills and leaks can contaminate the soil and ground water to the point where small, slowly developing leaks may be difficult to detect. Natural factors such as fluctuating barometric pressure, temperature, soil moisture content, methane, microbial activity and ground-water elevation and direction are believed to contribute to fluctuations in contaminant levels that are measured by external leak detection methods at previously contaminated sites. The Agency has sought to develop a standard for when existing contamination is so high as to prevent the selection and use of vapor monitoring methods as an option in detecting new leaks or spills.

There appears to be very little experience with applying vapor monitoring to hazardous substances. The proposed wording in 280.41(d)(4) requires that the level of background contamination not interfere with the detection of release. This general performance standard establishes the limitation that all volatile hazardous substances are, in a similar manner, masked by the same background interferences as are volatile petroleum products when they are subject to vapor monitoring in the excavation area. This general standard is intended to make it clear that with the use of this type of method, it is incumbent upon the owner and operator to determine how the problem of background concentration will be adequately controlled given the sensitivity of the equipment used, the volatility of the substance stored, and the background level (if any) of contamination at the site's excavation area.

Today EPA is proposing to limit the use of this method to sites that have a background concentration of vapors in the excavation area of no more than 500 ppm of total hydrocarbons. This requirement stems in part from EPA's concerns about the interferences that are posed to this detection method by background vapor concentrations from prior releases; for example, available field data suggest that background vapor concentrations in the excavation areas at existing retail gasoline stations may range from essentially zero to 300,000 ppm. EPA is planning a field monitoring program to better characterize background vapor concentrations. However, it is expected that there will often be some background concentrations of vapor contamination in the excavation areas surrounding many UST systems that stem from an accumulation of small spills as a result of past poor housekeeping practices.

The proposed requirement is also based upon consideration of the unlikely event of a release occurring that adversely affects human health and the environment while the background concentration of total hydrocarbons in the excavation area remains below 500 ppm. As stated earlier, vapor detection sensors are believed to be very sensitive for use in monitoring for releases because they use the phenomenon that volatile liquids such as gasoline will, in a porous soil medium such as sand, rapidly volatilize and spread out through diffusion in the soil at high vapor concentrations that are relatively distant from the source of contamination. EPA has documented cases where vapors traveled hundreds of feet underground from the location of the volatile liquid that was released underground. Vapors have been noted in many cases to travel much farther than the liquids released underground, though not necessarily in the same direction. With an ongoing release (a leaking tank or pipe) or a large spill, soil gas vapor concentrations will generally increase to high levels in the presence of this continuing source of volatile liquid in the excavation area. With small spills of limited volume (for example the accumulation of many small spills from sloppy past practices), similar to the evaporation of liquid gasoline above ground, the volatilization/diffusion process will continue underground until the original release volume has almost entirely evaporated—except for residual amounts that become bound to the soil. Thus, a low background contamination vapor level in the soil gas of the porous soil medium that typically surrounds an UST system in the excavation area is a good indication that no recently released liquids are available nearby to be volatilized.

By setting today's proposed standard at a maximum background concentration of 500 ppm of total hydrocarbons in the soil gas of the excavation area, EPA intends to not allow vapor monitoring at sites with higher background concentrations (for example, 1000 ppm) that might, under some circumstances such as improper well placement, result in a release going undetected because it was masked by pre-established contamination levels. The level proposed today may actually be much lower than could be tolerated by available vapor monitoring methods for purposes of detecting releases into an UST excavation area. A release of a volatile liquid into an excavation area constructed according to current recommended practices is reported (by vendors of this equipment and some local officials already allowing it) to diffuse rapidly through the excavation area soils at much higher concentrations than 1000 ppm. However, particularly at background soil gas vapor concentrations of higher than 500 ppm, the Agency is concerned that an UST site might already have a need to undertake corrective action in accordance with Subparts F and G of today's proposed rule.

The Agency also considered setting the maximum allowed level of soil gas background contamination much lower, for example, at a concentration of 100 ppm total hydrocarbons. At this lower threshold level, however, the Agency is concerned that measured concentrations of total organic hydrocarbons in the soil gas of the excavation area can fluctuate widely due to: (1) Small amounts of residual liquid contamination bound to the soil that can volatilize when the barometric pressure lowers; (2) a rise in the nearby water table that frees some residual contamination previously bound within the soil matrix that then volatilizes; (3) a new surface spill, even a very small one; or (4) the impacts of several other factors currently under study by the Agency but not completely understood yet. Because of such factors, EPA believes setting the background standard at 100 ppm in the soil gas of the excavation area would virtually eliminate the use of this method of monitoring at existing sites because the number of false positives would be unacceptably high. This low background level was not chosen also because it is not believed to be necessary for assuring that a release of volatile liquids in the excavation area will be detected. For example, liquids present in the soil of the excavation area at concentrations below 100 ppm of total organic hydrocarbons (that have not yet completely volatilized) are expected to result in concentrations of total hydrocarbons in the soil gas that are much higher than 100-500 ppm. Thus, this approach coincides with EPA's proposed requirements on release reporting, discussed later in this Preamble, that requires reporting of all soil contamination that is greater than 100 ppm of total hydrocarbons.

The Agency is aware that some methods, such as the use of tracers in the tank, may permit external leak detection monitoring to be used at existing sites with relatively high background concentrations of hydrocarbons. Careful selection of the sensor, design of the monitoring network, and manner in which the data

is interpreted from external leak detection methods may allow their use at sites where previous contamination has occurred. The Agency does not seek to limit the development or use of these methods at sites with previous contamination.

The Agency seeks to encourage the use of vapor monitoring so as to assure accurate and early detection of leaks; however, it may be necessary in the final rule to limit the use of the method through the establishment of not a single background contamination value (500 ppm TOH) but ranges of contaminant levels where the use of vapor monitoring may be preferred, marginal, or unacceptable. Data from soil-gas measurements or soil cores, made during the site characterization effort, may be used to assess the applicability of a particular vapor monitoring system. Factors such as seasonal variability, network design, and method selection, which are known to affect soil-core and soil-gas measurement data, are presumed to be less important in the measurement of existing contaminant concentrations at sites when ranges of background concentrations are used to predict the accuracy and reliability of a vapor monitoring system at a particular site. Comments are solicited on this approach as well as on the procedures to be used in reporting data on existing contaminant concentrations. What ranges can be established to limit the use of external leak detection at existing, previously contaminated sites?

Another alternative to the establishment of a standard, or ranges, to limit the use of vapor monitoring at sites with relatively high background levels of contaminants is the on-site calibration of a vapor monitoring system with a small, controlled release of a volatile tracer. Such a test would provide an estimate for the amount of product that could be detected from a leaking tank and the time that would be required for the leak to be detected. Such an approach would be particularly useful in setting the alarm level for an external vapor monitoring system. However, future research is required before the Agency can provide technical guidance on this approach for assessing the performance of vapor monitoring equipment. Comments are solicited on this concept.

(5) Must Be Capable of Being Pre-Set To Detect the Type of Substance Stored at Significant Levels Above Background in the Excavation Area (Section 280.41(d)(5)). In developing today's proposal for vapor monitoring methods, EPA also considered proposing a threshold sensitivity requirement. For example, devices that are designed to detect only the explosive limits of hydrocarbon vapors would not be able to meet the requirements proposed today. However, as mentioned previously, some devices are available that can detect concentrations of contaminants in soil gas in the parts per billion range. EPA has proposed that the monitoring device used must be able to detect the background concentration level in the excavation area (which must be less than 500 ppm of total organic hydrocarbons) and "any significant increases" above it. The determination of what constitutes a "significant increase" for detection purposes will depend in part on what is the background level in the excavation area and the volatility of the substance stored in the UST system. A small increase over the background level would have more significance for lower volatility substances such as fuel oil than it would for highly volatile substances such as gasoline.

What is "significant" may also differ between passive and active vapor monitoring methods, with smaller increases having more significance for passive methods that require vapors to reach the sensors through the process of diffusion. Such small increases have less importance with methods that advect (mechanically pull) vapors to the monitoring sensors through suction, unless an increase in the level continues over time. Today's minimum requirements for at least one measurement at each sensor every 30 days will result in numerous readings that could be evaluated to determine whether such increasing concentrations over time represent a statistically significant trend.

EPA believes that evaluation of soil gas concentrations over time will identify the trends that will define a significant increase. Such trend analysis may reveal unabated increases in concentrations that provide clear evidence of a release. The Agency has initiated several studies concerned with environmental monitoring techniques. The results of these efforts are expected to be provided in guidance that will further explain how trend analysis should be used to determine whether an increase is actually significant or not. For example, any rapid and dramatic jump in concentration levels in the excavation area soil gas above the maximum background level of 500 ppm may be considered significant, for example, a measured jump to 1000 ppm of total organic hydrocarbons.

In today's proposal, the background standard against which a "significant increase" is judged is expressed in terms of a volumetric concentration of total organic hydrocarbons. This reference standard was chosen because it is a common measurement that can be made for all volatile substances. Vapor monitoring sensors can also be designed to detect particular constituents (such as benzene, xylene, and toluene) or volatile organic compounds (VOCs) in general. The determination of what is measured can significantly affect the way measurements are performed. For example, VOCs (including benzene) make up a small portion of the total hydrocarbons in gasoline. Therefore, equally effective monitoring would have to take place at proportionately lower concentrations for these other substances to assure that rapid detection would take place (for example, benzene at 5 ppm and VOCs at 125 ppm). Likewise, VOCs would tend to evaporate and diffuse very rapidly while the total hyrdocarbon measurement would be relatively slower to diminish through the volatilization/diffusion process. Thus, monitoring for benzene at low levels could miss very high concentrations of total hydrocarbons in the excavation area that are the result of large old leaks or spills where the passage of time has allowed the "light ends" of the product (e.g., benzene, toluene and xylene) to evaporate and move away through diffusion.

Today's proposal is in terms of a total organic hydrocarbon measurement in the soil gas because it is believed to be a more thorough test of the condition of the environment. It is at a higher level than corresponding values for benzene or VOCs because it measures the complete volatile fraction of a released regulated substance. For example, small concentrations of petroleum in the soil are generally going to produce high levels in the soil gas because of the volatility of hydrocarbons. Thus, EPA believes that 500 ppm total hydrocarbons found in the soil gas will be indicative of a much smaller concentration (e.g., 50 ppm) of total hydrocarbons in the soil or ground water.

(6) Sensor and Well Network Based on Assessment of the Excavation Area (Section 280.41(d)(6)). The number, type, and locations of sensors or wells in the excavation zone are important elements in the success or failure of vapor monitoring to reliably and rapidly detect releases. EPA considered the need to develop design requirements, such as the number and location of wells and their construction requirements. However, a general performance standard was proposed instead because

the optimum design of any given vapor monitoring system is based on the consideration of several site-specific factors, such as the type of soils in the excavation area; the level of the background contamination in the soil gas; the location of the water table; the size, number, and configuration of the tanks; the volitility of substance stored; and the type and location of monitoring devices used (e.g., passive or active, periodic or continuous sampling). Therefore, the performance standard simply requires that a monitoring well network be designed that is capable of intercepting the vapors resulting from any release of the regulated substance stored at that particular site. To comply with this requirement, a brief assessment of the factors mentioned above will be necessary to determine how many sensors or wells are needed, including their design and location. EPA has initiated research into the factors that impact monitoring well network design and will provide guidance in this area if vapor monitoring wells are allowed under the final rules. (See General Requirements section for more details concerning site assessments, well networks, sensor capabilities, and data analysis; all are topics on which the Agency is today seeking comment and information.)

This limitation is also intended to ensure that all detection takes place within the excavation area. Vendors of these devices commonly report that they should be used within the excavation area and local officials contacted by EPA who allow the use of this method have reported that this is a requirement they commonly employ to ensure more reliable release detection. Therefore, because of present limitations concerning data on soil vapor transport and the likelihood that vapors will disperse more quickly in the excavation area than in the surrounding undisturbed native soils, EPA has proposed limiting the use of vapor monitoring to within the excavation area.

(7) Marking Monitoring Wells and Securing from Tampering (Section 280.41(d)(7)). The final condition proposed for this method of release detection is that all monitoring wells be clearly marked and closed to outside access and tampering. This marking should make it distinct in appearance from that of the fill pipe. EPA has been informed by state, local, and industry officials about incidents where, for example, product deliveries have been inadvertently introduced into monitoring wells. EPA is concerned that such incidents could increase with today's proposed requirement that all vapor monitoring wells be located within the excavation area of the UST system. This proposal could also result in the placement of wells in close proximity to the tank fill port.

The requirement that monitoring wells be marked and secured from tampering can be met by simply locking well ports to prevent unauthorized outside entry and marking them as "observation wells." Care should be taken to not mark them with a color that signifies a fill port under the marking systems now prevalent in the retail gasoline marketing industry (as recommended by the American Petroleum Institute).

(8) Issues for Public Comment. Because of the limited experience with vapor monitoring as a release detection method, EPA is requesting comment on the appropriateness of each of the proposed requirements and standards, with supporting data and studies where available. Comments and information on detection limits, probabilities of detection and false alarms for various equipment, as well as on the appropriateness of every 30-day sampling using vapor monitoring is also solicited. EPA is especially interested in receiving information regarding the field performance of vapor sensors in detecting releases from underground storage tanks. The Agency requests comments specifically on whether the use of this technology should be limited at existing UST systems. Information and comments concerning the applicability and reliability of passive versus active vapor monitoring/sampling methods is requested.

The Agency requests public comment and available information, including summaries of field experiences, that would provide an indication of what constitutes an appropriate maximum background concentration and what constitutes a significant increase above background levels of contamination in the soil gas of the excavation area. For example, at an UST storing gasoline would an increase of 100 ppm, 200 ppm, 400 ppm, or 1000 ppm total hydrocarbons in the excavation area constitute a significant increase for release detection purposes? Are there advantages and disadvantages in the selection of the specific components of the soil gas to be measured (specific constituents, volatile organic compounds, total organic hydrocarbons) and should it vary for use in release detection versus the cleanup of releases?

The measurement of hydrocarbons, or organic solvents in the soil-gas, soil, and ground-water is a difficult process with the sampling and analytical methods being important factors. Standards are in various stages of development for many aspects of an on-going EPA site characterization study involving the measurement of organics. Soil-gas measurements may be made with a variety of methods some of which will identify individual constitutents in a complex mixture of hydrocarbons, e.g., gas chromatographic analysis. Some measurements include methane while others exclude this naturally occurring constitutent. Should soil-gas data used to characterize existing contamination at a site be reported in terms of ppm total hydrocarbons, or should some constitutents such as methane be reported separately? Should the units be in terms of ppm, or micrograms per cubic meter with respect to methane, benzene or some other standard?

The Agency also seeks information on the sensitivity, and reliability of external leak detection methods for use at previously contaminated sites. How and when can a leak of, for example, 0.1 gallons per hour be detected at a site with previous contamination? What levels of contamination will prevent external leak detection methods from being effective in detecting small, slowly developing leaks without an excessive number of false alarms? Data showing the fluctuation of contaminations over time at sites where leaks are not believed to be occurring is specifically requested. Data on the concentrations of organic contaminants in the soil gas, soils, and ground water is solicited for sites where no leakage from the tank system is believed to have occurred. These data will be useful in determining the long-term performance of external leak detection systems in contaminated environments where the sensitivity and response time of the external leak detection system must be assessed in relationship to alternative leak detection systems.

Finally, the Agency specifically requests comment on the applicability of the requirements proposed for vapor monitoring to new hazardous substance UST systems. Are more requirements necessary to assure that the use of this method can be done reliably with different hazardous substances? Do the requirements provide a sufficient standard of performance for UST owners and operators so that they may adequately develop a method that will work at a particular site, given the volatility of the substance stored?

c. Monitoring for Liquids on the Ground Water (Section 280.41(e))

Today's proposal also allows monitoring techniques that are based on detecting the physical presence of released liquids on top of the water table. Under this method, monitoring wells located within the excavation area take advantage of the physical properties of certain regulated substances that cause them to "float" on top of the ground water when released into the underground environment. This method can be used with most petroleum products because they are lighter than and largely immiscible with water, and may be used through a case-by-case variance for other regulated substances that are lighter than and immiscible with water.

Because it is keyed into particular properties of the liquids being stored, monitoring for liquids on the water table can be used for various types and sizes of UST systems. The technique also can be used for UST systems which are partially below the water table if the characteristics of the released liquid will cause it to float on top of the ground water. This method of release detection can be performed either manually or automatically. Three general techniques would be allowed:

- Physical inspection of ground water using a water sampling bailer to detect a visible thin film of product on the water table or to smell the product in the water sample;
- Application of a thin film of paste to a rod or tape which, when lowered into the well, will change color upon exposure to any hydrocarbons on top of the water table; and
- A variety of automatic sensing devices which, after placement in monitoring wells, can be continuously operated to electronically detect the physical presence of hydrocarbons on the ground water.

A major concern with the use of this method is that some soil and ground water will be contaminated before a release is detected. Some of the hundreds of organic compounds comprising gasoline are soluble in water and will dissolve and enter the ground water, including some which could under certain conditions present a risk to human health and the environment (such as benzene, toluene, and xylene in gasoline). This is particularly important because cleanup of an aquifer to drinking water requirements is not possible, as a matter of routine. On the other hand, several states allow the use of ground-water monitoring, reasoning that this method offers rapid and certain detection, if properly applied. In fact, at many sites no other method may work as well as ground-water monitoring to rapidly and assuredly detect leaks from single-walled tank systems. If EPA barred the use of ground-water monitoring, therefore, the effect might be the creation of a *de facto* class of tanks at some sites where secondary containment would be required. EPA is seeking public comment on this point.

Despite these concerns, however, the Agency has concluded that this method can be applied to detect and minimize releases if it is used within certain prescribed limits which are intended to ensure rapid detection. Therefore, today's proposal provides several important requirements on the use of this method that, when combined with rapid corrective action when a release is detected, is believed to effectively minimize potential adverse impacts to ground water.

The primary limitations on the use of ground-water table monitoring being proposed today are:

- The substance stored is immiscible in water and has a special gravity of less than one;
- The ground water must be in or very near the UST excavation area (never more than 20 feet below the ground surface) and the backfill soils must have a sufficient hydraulic conductivity (not less than 10^{-3} cm/sec) to allow the released product to flow freely to the monitoring wells;
- Monitoring equipment or practices must detect at a minimum the physical presence of a release of 0.125 inches of free product pooled on the ground water in the monitoring wells;
- The monitoring wells must be located in the excavation area, and the monitoring well network must be designed to detect a release from any portion of the UST system and be based on an assessment of the conditions immediately surrounding the UST system; and
- All monitoring wells open to outside access must be clearly marked for their purpose and secured from unauthorized entry.

Each of these limitations is discussed in more detail below.

(1) The substances stored is immiscible in water and has a specific gravity of less than one (Section 280.41(e)(1)).

Today EPA is proposing to require that ground water table monitoring only be allowed where the substance stored in the UST system is immiscible in water with a specific gravity less than one. This requirement is intended to restrict the use of this method to situations where a release from the UST system of the regulated substance stored will pool on top of the nearby water table (like many of the lighter petroleum substances such as gasoline). A specific gravity of less than water will assure this. The requirement also establishes the general criterion of immiscibility to assure that even small releases will not rapidly dissolve in water so that a sensor located on top of the groundwater table will not be able to detect the presence of the released material.

(2) Twenty Foot Depth to Ground Water and Porous Soils (Section 280.41(e)(2)). Today's proposal limits the use of this method of release detection to areas with shallow depths to the water table and porous soil conditions. These requirements are intended to assure that potential impacts to the environment are minimized and that release detection is more certain. Typically, UST excavations extend between 10 to 15 feet below the ground surface. Thus, a release would only have to normally travel between 0 to 30 feet to reach the ground-water table (at 10 to 45 foot depths) and the point of monitoring. While the amount of the release necessary to reach a monitoring well will vary under site-specific conditions, EPA expects in the shallow water and highly conductive soil conditions proposed today that small releases will rapidly reach the monitoring wells, rapid detection will be possible, and corrective action would be relatively simple. The porous soil conditions with at least a 10^{-3} cm/sec hydraulic conductivity are also intended to ensure rapid detection. Existing UST systems with proper installation procedures and sand or gravel backfill will be able to meet this condition provided that the soils beneath the UST system have a hydraulic conductivity of at least a 10^{-3} cm/sec or more between the UST system and the location of the sensors in the monitoring wells on the water table. This minimum conductivity was selected to ensure that releases do not begin to travel laterally and miss the monitoring points. The above conditions also promote more certainty in detecting a release because they require the point of monitoring to be very close to the UST system and, therefore, assure that there is little potential for interference with rapid detection once a release occurs.

Some industry representatives have recommended in discussions with EPA that the use of this release detection method be allowed at locations with a greater maximum depth to the water table, such as 40 feet. After examining this option, EPA identified two concerns with the use of this method of detection

at such lower depths to ground water. First, this approach would allow an increase in the amount of release that could occur prior to detection and, thus, an increase in the impacts that could require more extensive corrective action (including the amount of underlying soils contaminated). As depths to ground water increase, there is also an increased concern that a release could travel sideways before reaching ground water due to unknown soil conditions such as a layer of less conductive silts or clays. This could result in the release missing the monitoring wells located beneath the UST until detection of the release (if ever) is even more significant and difficult to correct.

Representatives of one manufacturer of continuous automated ground-water table monitoring equipment have stated to EPA staff that this equipment is not recommended at locations where depth to ground water exceeds 20 feet. The state of Florida UST program requires that the depth to water table at the time of drilling not exceed 20 feet for this type of monitoring. EPA's proposed requirement reflects the concerns addressed in the paragraphs above and these established approaches, by proposing to limit the use of this method to areas where the seasonal maximum depth to the water table from the ground surface does not exceed 20 feet.

Another approach considered by EPA was to limit the use of this method to areas where ground water is within the excavation area (typically, between 10 to 15 feet from the ground surface to the excavation bottom). This would reduce impacts, possible interferences at greater soil depths, time to detection, and clean-up costs to the minimum possible. This limitation could be particularly important at sites with complex native soil structure that could enhance the flow of leaked product away from, rather than towards, monitors. EPA did not, however, propose limiting this method to excavation area water table conditions. The Agency does not believe the difference of 5 to 10 feet from the proposed depth of 20 feet would result in contamination that would significantly increase adverse impacts to human health and the environment. In using a seasonal maximum depth to ground water, the Agency expects the distance between the excavation area and the ground water to be negligibly small for detection and cleanup purposes.

Finally, EPA is also concerned that ground-water table monitoring in relatively impermeable soils (or in soil with impermeable layers), or in disturbed soils, could result in a horizontal movement of released product to areas other than where the monitoring wells are located. Today's requirements that such methods be used only in highly conductive soils (for example, sand) is intended to minimize this concern by limiting its use to soils where this potential problem would be unlikely to occur.

(3) Capability of Monitoring Equipment or Practices (Section 280.41(e)(3)). In developing today's proposal, EPA considered the effectiveness of both the manual or automatic ground-water table monitoring techniques. A major constraint in trying to limit these methods to a particular threshold of detectability is the current lack of field experience and performance data on the long term reliability and operating performance of automated equipment.

EPA believes that both the manual and automated approaches have certain advantages and disadvantages. For example, manual monitoring relies on the ability and motivation of the owner or operator to properly perform the test at required intervals, and the tests are somewhat qualitative (determined by human sight or smell of the contents in a bailer that pulled a water sample from the observation well). As stated previously in this Preamble, most existing UST systems do not have release detection. Thus, this manual approach would require a significant change in owner and operator behavior. Manual methods do allow inspectors to take their own samples during visits to the site. Continuous, automated systems are subject to failings in proper installation, operation, and maintenance. However, they have the distinct advantage of being continuous and automatic and not subject to the need for routine human attention.

In order to provide flexibility to both the states and the regulated community, while encouraging technology innovation and improvement, EPA has decided to allow both manual and automatic methods under the proposed rule.

EPA also has concluded there is a need to limit the performance of both the manual and automated approaches so that small releases will be detected. Manual approaches, whether through physical inspection of monitoring samples for odors or a visual sheen, or the use of detection pastes, are invariably somewhat subjective. However, when the presence of product can be seen or smelled, a release is expected to be small if quick action is taken to correct the problem. Existing field experience with the automated detection devices is limited because they have only recently become available. EPA has no documented test results concerning their performance. However, manufacturers of these devices consistently claim they can detect product on the water table where it is within a thickness of from $\frac{1}{32}$ to $\frac{1}{8}$ inches. Therefore, EPA is proposing today a requirement that devices used at a minimum be capable of detecting a release measuring $\frac{1}{8}$ inch on the ground water. This approach applies to both the use of automated or manual techniques. This level of detection is expected to be achievable using current practices and equipment already available to the regulated community.

(4) Monitoring Well Network Based on Assessment in the Immediate Vicinity of the UST (Section 280.41(e)(4)). An important factor in the success or failure of the use of the ground-water monitoring method is the number, type, and location of wells that are used. In developing today's proposal, EPA considered requiring detailed design criteria. For example, Florida's requirements specify such criteria as minimum well diameter, well screen location, minimum screen opening size, backfill material, construction material, seal requirements, and cap requirements.

However, EPA has decided not to specify this level of design detail and is instead proposing a general performance standard requiring that the system be designed to detect a release from any portion of the UST system based on an assessment of the area in the immediate vicinity of the UST system (i.e., the excavation area and soils and water table immediately below it). This general approach is intended to provide the states and the regulated community significant flexibility in the design of well systems that allow various location-specific characteristics and local approaches to be considered.

When released liquids reach the water table, their dominant movement is expected to be primarily in the direction of ground-water flow. However, this direction is not often precisely known and is often difficult to determine in developed areas. Therefore, placing several wells on various sides of the UST system will increase the probability of detecting a release quickly. EPA considered requiring a minimum number of wells in various configurations and locations. However, there is no one optimum number and location of wells for all locations and EPA believes a brief assessment will have to be conducted at each location to tailor an approach that suits the conditions in

and immediately below the excavation area. The optimum approach will vary by the size, number, and design of the tank, as well as other site-specific factors (such as the depth to the water table and the type of substance stored). EPA has initiated research concerning the factors that influence proper well network design. EPA intends to publish guidance concerning an approach to determine the proper number, location, and types of wells under various conditions, if water table monitoring wells are allowed under the final rules.

In general, EPA has concluded that all monitoring wells should be located as close as possible to the UST system when using ground-water table monitoring. This is believed to assure the fastest and most certain detection of releases. Thus, today EPA is proposing that all monitoring wells must be located close enough to the UST system to be within or through the UST excavation area. Because EPA believes that the predominant flow of a release under the conditions specified today will be directly down to the water table, and well location through the excavation area will assure that the placement of monitoring points will be as close as possible to the pooled release.

(5) Marking Monitoring Wells and Securing Them From Tampering (Section 280.41(e)(5)). Today's proposal for monitoring liquids on the ground water requires that monitoring wells be located in the excavation area. As was discussed for vapor monitoring, EPA believes that the owner and operator must take steps to make sure all such wells are of different designs than product fill ports or otherwise clearly marked and closed to unauthorized outside access. Today's proposal requires that these simple, prudent steps be taken at all monitoring wells.

(6) Issues for Public Comment. EPA is seeking public comment and performance-related information regarding the use of liquid monitoring on the water table. EPA is particularly interested in receiving comment on the appropriateness of the requirements proposed for the use of this method of release detection. The Agency is also interested in receiving information on the design and use of this method in the field, particularly the likelihood of ambiguous or false detection results that are the result of previous contamination. Comments on whether specific techniques of ground-water table monitoring, or the method itself should be allowed, are also solicited; particularly in drinking water aquifer locations.

d. Monitoring for Releases in an Interception Barrier (Section 280.41(f))

Interception barriers are generally basin-shaped impermeable liners installed beneath the UST system to intercept downward-migrating releases and direct them to a monitoring well. These barriers have no walls and only offer partial containment of releases. Interception barriers are generally for use in regions where ground water will not normally reach them. They are often constructed of compacted natural clays, cement, soil-cement mixtures, or of synthetic materials. Today's proposal allows the use of interception barriers as a way of enhancing the capability of a detection device to intercept and detect a release from any portion of the UST system.

Because this method of monitoring enhancement is often used with only one monitoring well, it is important that the interception barrier properly intercept and direct releases to this single monitoring point. A faulty design or installation that does not catch a release; a crack or hole in the barrier; or improper routing of the release to the monitoring well are examples of ways this simple release detection enhancement scheme can potentially be undermined. Because of these and other possible problems with this method of release detection, the Agency considered not allowing it. However, it is allowed in at least three states (California, New York, and Kansas), and the Agency has concluded that it can provide adequate release detection at UST systems if carried out within certain limitations. Therefore, today's proposal includes this method subject to certain requirements that must be met before it can be used at a particular UST system. The requirements on the use of interception barriers that have been proposed today include:

- The interception barrier must be sufficiently thick and impermeable to ensure interception and detection of a release from the UST system;
- It must be designed to intercept any release and ensure its detection in the monitoring well;
- It must be compatible with the substance stored so as to not deteriorate in the presence of the released product;
- Soil moisture or rainfall must not render the monitoring method used inoperative for release detection purposes for more than 30 days;
- The barrier must always be above the highest historical ground-water level and not in a 25-year flood plain, unless the barrier and monitoring designs are intended to still operate under such conditions; and
- Monitoring wells must be clearly marked (or of a different design) and closed to unauthorized outside access and tampering.

These limitations are discussed in more detail below.

(1) Impermeable Barrier (Section 280.41(f)(1)). Today's proposal allows the use of interception barriers only if they are sufficiently thick and impermeable to permit interception and detection of releases. This limitation is intended to ensure that the barrier is, in fact, an obstacle to the downward migration of a release; and that the barrier would cause the release to accumulate and make contact with the barrier's detection device. Natural clays must have at least a 1×10^{-6} cm/sec impermeability. This value was chosen on the basis that a release would not be able to traverse a two foot thickness of such material in one month's time. (This is a typical minimum thickness that can be easily spread and compacted by hand on the bottom of an excavation area.) Also, artificial liners and cements must be of sufficient thickness to avoid cracking and splitting due to settling or other underground pressures.

(2) Intercept and Detect Releases (Section 280.41(f)(2)). Another general limitation to the use of interception barriers is that they must be designed to intercept all releases and ensure they are directed to the monitoring well. Because a release must be captured by the barrier and directed to the monitoring well before it can be detected, the design and construction of the barrier is important for the release detection to work. The barrier must be large enough to catch all releases and must not settle, warp, or otherwise deteriorate so that the release is misdirected away from the monitoring well.

There are no codes or recommended practices available concerning the design and construction of barriers. Therefore, EPA is proposing a performance standard for the design and construction of the barrier which must be met by the owner and operator utilizing this method. The barrier performs the function of enhancing the performance of the monitoring well(s) and thereby foregoes the need for several monitoring wells that follow a careful network design around the UST.

(3) Barrier Compatibility (Section 280.41(f)(3)). Whatever type and design of barrier is used, it is important that it be compatible with the substances stored in the UST. Small spills or releases cannot be allowed to undermine the integrity of the barrier because of the critical function it

performs in detecting releases. If the integrity of the barrier is undermined in any way by released product so that it will deteriorate and not deter a release for detection, the UST will no longer be equipped with reliable release detection.

(4) Soil Moisture, Rainfall, and Ground-Water Level (Section 280.41(f)(4)–(5)). The presence of water, from whatever source, within the interception barrier can undermine the monitoring device's ability to detect releases. Some barriers are designed to act as a bathtub and the monitoring is designed to take place on top of the captured water within the "wet" barrier. Other systems are so-called "dry" detection methods because they depend on the detection of released liquids within the low area (sump) of the barrier and pooled water can hinder the accuracy of this determination. Thus, this proposed general performance standard requires that the UST owner and operator consider possible interferences that could overcome the effectiveness of the barrier's detection technique, including a rising water table that overtakes the monitoring well's location within the barrier or a surface water saturation event in a flood-prone area (e.g., a 25-year flood plain) that could inhibit the detection of a release for more than 30 days.

(5) Marking Monitoring Wells and Securing Them from Tampering (Section 280.41(f)(6)). Today's proposal could result in a monitoring well in the excavation area that is open to aboveground, outside access. For the same reasons as discussed under other methods, these wells must be clearly marked and secured from unauthorized access and tampering.

(6) Issues for Public Comment. EPA solicits comment and information concerning the performance of interception barriers, particularly their efficacy in detaining and directing releases reliably to ensure their detection. EPA specifically requests comments and information concerning the proper design and use of such barriers, for example, the use of "dry" as contrasted to "wet" sump techniques of release detection. Also, the Agency requests comment concerning the 1×10^{-6} cm/sec permeability requirement. EPA is concerned that small releases may not be intercepted and directed to the monitoring point by this type of barrier.

e. Automatic Monitoring of Product Level and Automatic Inventory Reconciliation [Section 280.41(g))

Automatic product level monitoring and automatic inventory reconciliation are two methods of release detection that rely on measurement of product volume in the tank. In product level monitoring the product level in the tank is measured several times during a period when there are no product inputs or withdrawals. A consistent drop in product level over a several hour period can indicate a release from the tank. In the second method, automatic inventory reconciliation, the operator reconciles product deliveries, withdrawals and inventory each day to identify shortages. A large shortage in a single day or small, persistent shortages over a month can indicate a release of product. Today s proposal allows the combined use of automatic product level monitoring and automatic inventory reconciliation to detect releases. Automatic product level monitoring requires measurement of small changes in product height, as little as 0.001 inches. In addition, small changes in product temperature must also be measured to accurately compensate for temperature-induced changes in the product volume. Several level sensing systems are available for UST systems and are claimed by vendors of these devices to detect release rates of 0.2 gallons per hour. Although there is little documented performance data for these systems, the sensitivity of these devices is expected to be extremely good in most situations. In fact, some manufacturers claim that their systems reliably detect release rates of 0.1 gallons per hour. There are EPA studies in progress that are evaluating the performance of these automatic level sensing systems.

Automatic inventory reconciliation requires that the product inputs, withdrawals and the stored volumes are reconciled daily for an extended period of time. Many of the errors associated with these measurements are random and a loss trend that is smaller than the typical measurement error can be detected by analyzing many daily losses as a group. For many years, manual methods have been an industry-recommended practice for detecting losses due to both theft and tank system leaks and is widely practiced. Generally, automatic inventory reconciliation requires significantly less diligence on the part of the operator to ensure consistent and accurate inventory computations.

There are several major concerns with the use of either automatic product level monitoring or automatic inventory reconciliation as release detection methods. Similar to tank tightness testing, there is a lack of performance data for product level monitoring systems. Also, the product level monitors detect releases from the tank only, and do not sense losses from the pipe system. Although significantly less so than manual methods, some automatic inventory reconciliation equipment involve considerable operator involvement, and with it, opportunity for human error. The Agency considered not allowing the use of either of these methods because of these major issues. However, EPA believes that these methods may be usefully applied in a manner that will detect releases if they comply with certain performance requirements. Today's proposal provides several important requirements concerning the use of these methods that, when combined with any necessary corrective action when a release is detected, are believed to effectively minimize potential adverse impacts on ground water.

Today's proposed requirements on the use of automatic product level monitoring (section 280.41(g)) are that the test be conducted at least once every 30 days when the tank is at least 80 percent full, and is capable of detecting a 0.2 gallon per hour leak rate with a probability of detection of 0.99 and a probablity of false alarm of 0.01.

Proposed requirements for the use of automatic inventory reconciliation are the same requirements proposed for inventory reconciliation used with tank tightness testing, except that inventory measurement must be done automatically:

- Inventory reconciliation controls must include reconciliation of inputs, withdrawals, and stored inventory each operating day so that a release greater than 5 percent of flow through on a weekly basis or 0.5 percent of flow through on a monthly basis will be detected;
- The height of the stored inventory must be automatically measured to a 0.125 inch accuracy;
- Inputs must be reconciled with delivery receipts by measurement of tank inventory prior to and after delivery;
- Deliveries must be made through a drop tube; and
- The product dispensing must be metered and recorded within an accuracy of 5 cubic inches for every 5 gallons of petroleum withdrawn.

These proposed requirements are discussed in more detail below.

(1) Use of Both Methods Together. Today's proposal requires that both automatic product level monitoring and automatic inventory reconciliation be used in combination. As previously mentioned, EPA has concerns about the performance of either of these methods

used alone. Product level monitoring generally can only be used to detect losses from the tank, so another method of release detection must be used for the piping system. Second, the performance claims of the product level monitoring system manufacturers have not been confirmed through independent testing nor is the reliability of these systems exactly known. Vendors of these devices do not commonly claim that product level monitoring can be done with the same effectiveness as tank precision tightness testing. Although testing and evaluation programs are in progress, EPA has concluded that it is prudent in this situation to require a second, redundant method (automatic inventory reconciliation) that is generally available using the same equipment to increase confidence that releases will be detected. Third, as with precision testing, automatic product level monitoring cannot be conducted on a continuous basis because inputs and withdrawals interfere with the test results. Often stations operate 24 hours a day, 7 days a week and must schedule monitoring periods. In such situations, automatic inventory reconciliation provides more frequent release detection. Conversely, the Agency is concerned that automatic inventory reconciliation, used alone, still may not provide adequate release detection because it may be subject to considerable error. EPA believes that requiring these automatic techniques to be used in combination increases confidence that releases will be detected, and that the incremental costs will be small because several level sensing systems are available that can perform both tank level sensing and inventory reconciliation operations.

(2) Level Monitoring Requirements (Section 280.41(9)(1)). Today's proposal requires that product level monitoring must be conducted at least every 30 days. As mentioned above, some stations are operated continuously and therefore their operators will have to schedule product level monitoring periods. Other stations close for a period each night, but the tank may not always be 80 percent full at night. The Agency considered requiring more frequent product level monitoring, but this is believed to be unnecessary if inventory is reconciled daily. Another consideration is that owners and operators would have some difficulty scheduling more frequent tests, even if done automatically.

Today's proposal also requires that the tank be at least 80 percent full during the test because this ensures that more of the tank surface is checked for releases. The Agency considered requiring the tank to be completely full, but decided that would make the performance of the test unnecessarily difficult for the regulated community to achieve. Tanks are routinely used at below 80 percent capacity most of the time during operation. Also, because this is a minimum requirement, the Agency expects the test will sometimes be conducted at full tank capacity.

Today's proposal requires that product level monitoring be conducted to detect a 0.2 gallon per hour leak rate, with a probability of detection of 0.99 and a probability of false alarms of 0.01. The 0.2 gallon standard is based on manufacturers' performance claims. As previously mentioned, the Agency is not aware of independent performance data for these systems.

The Agency chose this performance standard because it believes that it will challenge the manufacturers to prove that their systems can meet the standard and thereby will result in the approved use of these systems. EPA recognizes that the currently available systems may not provide adequate performance on tanks larger than 12,000 gallons.

The Agency's testing evaluation program in our Edison, New Jersey laboratory will soon be evaluating some of this equipment more closely. Should new information reveal that automatic product level monitoring is as effective as precision tank testing, this equipment may be held in the final rule to the same standard proposed today for tank tightness testing. The requirements proposed today for automatic product level monitoring are intended to hold users of these devices to the maximum performance described as achievable by their vendors. Therefore, while the proposal holds this equipment to a higher threshold rate than tank tightness testing, it is otherwise being held to the same probability of detection and false alarm.

(3) Inventory Reconciliation Requirements (Section 280.41(g)(2)). Today's proposal sets the same requirements for inventory control and reconciliation as when it is required in combination with tank tightness testing, except that it must be performed using the same automatic equipment used for the monthly product level monitoring. (See the discussion of inventory controls in Section VI.D.3.a. of this Preamble for details concerning these requirements.) This equipment can generally be used for both purposes and today's proposal requires that they be used in combination (in order for it to satisfy today's requirements for release detection).

Although the performance of automatic inventory control and reconciliation has not been quantified, it is not yet believed to be sufficiently accurate to meet the performance standard of 0.1 gallons per hour required for the precision tightness test discussed earlier in this section of the Preamble. Therefore, it is not presented as a separate testing alternative in this proposal, unless it is used in combination with semi-annual tightness testing or monthly automatic product level checks. EPA, however, may accept automatic inventory reconciliation alone as a viable alternative release detection method in the final rule should it be demonstrated to meet the tank tightness test standard. The Agency solicits comment and performance information concerning the use of this method for release detection purposes.

f. Interstitial Monitoring Between the UST and a Secondary Barrier (Section 280.41(h))

Interstitial monitoring is a method of detecting releases in the space between the UST and a secondary barrier. It is believed to be reliable, easy to use, and the least expensive release detection system to operate once the secondary barrier is provided. Today's proposal allows the use of interstitial monitoring techniques that sample automatically or manually in the space between double-walled tanks and piping systems or single walled tanks and piping surrounded by an excavation liner.

The appropriate use of interstitial monitoring techniques varies with the design of secondary barrier used. The most common methods include either the use of concrete vaults, double-walled tanks and pipes, and synthetic flexible membrane or clay liners in the UST excavation area. Most of the various sensors associated with the liquid and vapor monitoring methods previously discussed for the other methods of release detection can be used within the secondary barrier. In many cases only one monitor is necessary because all releases are contained and, thus, more easily detected by a single sensor.

As with the case of other methods of release detection, there is little performance data concerning the use of the various techniques of release monitoring within the interstitial area between the UST system and the various types of secondary barriers surrounding it. Although this method is commonly perceived to be the most reliable form of release detection, an important concern with the various techniques of interstitial detection is

their improper use (e.g., the careless design, location, operation, and maintenance of the detection sensor or secondary barrier). When improperly used, these systems could result in false alarms or fail to detect releases but still provide a false sense of security concerning the UST system's integrity, the method's ability to detect releases, and the containment of releases. Another concern is ensuring the integrity of the secondary barrier so that releases do not escape detection by the single monitoring sensor. Today's proposal establishes several requirements concerning the use of secondary barriers and interstitial monitoring that are intended to ensure that it is effective in detecting releases. These limitations are:

- The design construction and installation of the secondary barrier must assure detection of any release from the UST system.
- Double-walled UST systems must use monitoring that is capable of detecting any breach in the inner wall;
- UST systems with a secondary barrier/liner within the excavation must use monitoring that is capable of detecting any release into the interstitial area:

—The secondary barrier must be sufficiently impermeable to permit containment and detection of a release;
—The secondary barrier is compatible with the regulated substance stored;
—The secondary barrier must be above ground water and not used in a 25-year flood plain unless the design specifically allows for these conditions, and must be compatible with the substance stored;
—The monitoring device must not be rendered incapable of detecting releases due to changes in soil moisture conditions or rainfall events;
—All monitoring wells open to outside access must be clearly marked for their purpose and secured from unauthorized entry.

- UST systems with internally-fitted membrane liners must use an automated device that can detect when the integrity of the tank is breached, and the liner must be compatible with the substance stored; and
- Tanks provided with interstitial monitoring must also have release detection for all attached underground piping and equipment.

Each of these limitations is discussed in more detail below.

(1) Must Be Designed, Constructed and Installed To Assure Detection of Any Releases (Section 280.41(h)(1)). The general performance standards approach that EPA is proposing today in § 280.40(h) for secondary barriers with interstitial monitoring is intended to enable tank owners and operators to follow any available industry codes and accepted engineering practices in establishing these secondary barriers. The industry consensus codes are, in fact, already now being followed for many of the new double-walled UST installations. Today's proposal in 280.40(h)(1) is intended to permit flexibility in the choice of secondary barriers and interstitial monitoring techniques that can be used. Some of the secondary containment barriers that can be used are double-walled tanks and pipes, concrete vaults, synthetic flexible membrane liners, and compacted or treated clay soils.

Existing consensus codes and recommended industry practices do not yet exist on a wide-spread basis for the use of secondary containment at UST systems. Today EPA is not proposing detailed design and construction standards in this area. The rapid development of numerous technologies at the national level precluded EPA proposal at detailed design standards. Instead, the owner and operator should consult with the UST system installer to determine which form of secondary containment is appropriate for the site and will assure releases are detected. For example, the Steel Tank Institutes "Standard for Dual Wall Underground Storage Tanks" can be used as guidance for meeting this requirement. In addition, United Laboratories is developing testing standards for the listing of flexible membrane linear systems for UST excavation applications that also can be used to assure compliance with this proposed performance standard. However, for many of the choices of secondary barriers the owner and operator will need to consult the guidance of a trained and experienced engineer familiar with accepted engineering practices in this area.

(2) Must Detect Breaches in the Inner Wall of a Double-Walled UST System (Section 280.41(h)(2)). A variety of interstitial detection techniques are allowed within the double-walled systems. The only limitations EPA is proposing today on their use is that they be able to detect a breach in the inner wall. Thus, the Agency is not requiring detection of breaches in the outer wall unless they can interfere with the detection of actual releases through the inner wall.

The techniques of monitoring for pressure or liquid level changes within the interstitial area would be activated by a failure of the outer wall but, in this condition, it is unable to detect if there is a breach in the inner wall (or whether an actual release is occurring). Therefore, under today's proposed limitation for double-walled UST systems, when a pressure monitor is being used, the owner and operator would have to assure breaches in the outer wall are immediately repaired so that release detection compatibility is maintained. Similarly, if the inner wall fails it must also be immediately repaired, or the tank system component replaced, because under this condition the pressure monitor system would no longer be able to ascertain whether a release to the environment was occurring.

(3) Secondary Barriers Within the Excavation Area Must Be Able To Detect Any Release Between the UST System and the Barrier (Section 280.41(h)(3)). Under specific circumstances, secondary barriers that surround an UST system in the excavation area (vaults, clay walls, or membrane liners) may not facilitate the detection of releases. Today, EPA is proposing some general limitations that would not allow the use of secondary barriers that are not sufficiently thick or impermeable to assure containment and detection of releases. Natural or artificial liners should not be used in the excavation area where site conditions could render them useless for release detection purposes. For example, flood waters or high ground water could invade the interstitial area and render the release detection sensors useless. Likewise, under such conditions the associated pressure gradients could force a substantial breach in an inadequately designed secondary barrier, thus providing a pathway for a future release to go undetected through the barrier after the return to low water conditions. Today's performance standard is intended to require avoidance of all the above conditions that could render release detection monitoring incapable of detecting releases. There are, however, barriers that can be engineered to work well in high water saturation conditions. In these instances, the barrier is filled deliberately (partially or fully) with water and the monitoring takes place on the water surface. Today's proposal allows the use of such designs. Both natural and artificial barriers that are incompatible with substances stored are prohibited because such incompatibility can weaken and ultimately breach the barrier's design. This could render them useless in containing a release sufficiently for detection purposes.

Secondary barriers that surround a UST system in the excavation area (vaults, clay walls, or membrane liners) can also trap soil moisture, rainfall, or flood waters to such an extent that the vapor or liquid monitoring device is rendered completely inoperative for release detection purposes. EPA is today proposing a general performance standard that requires the owner and operator to ensure that the monitoring technique used will not be rendered inoperative by these conditions on-site for more than 30 days.

There are two basic ways of meeting this limitation. First, an impermeable cap can be provided over the top of the secondary barrier system, thereby preventing rainfall and soil moisture from entering and pooling within the interstitial monitoring area. Second, equipment could be provided for periodically pumping out moisture that becomes trapped within the secondary barrier system, thereby maintaining the system's design for release detection.

For reasons already discussed above concerning other release detection methods using monitoring wells, all wells must be clearly marked and closed to unauthorized outside access.

(4) Internally-Fitted Membrane Liners (Section 280.41(h)(4)). EPA is aware of an interstitial monitoring technique within internally-fitted membrane liners that is currently available on a very limited basis in the United States. This technique has been widely used in West Germany for a number of years (primarily for diesel fuel storage). It consists of internally fitting a membrane liner into the inside of the tank and monitoring the space between using a device that maintains a partial vacuum pressure in the interstitial space. EPA has today proposed to allow the use of this type of monitoring technology, using those designs that are activated when the integrity of the tank is breached. Because the tank itself provides the structural support to the liner, a breach in the tank indicates a weakening of that support and a potential release. Also, once the vacuum is broken, and the interstitial monitor is activated, it will no longer be able to detect future releases. Thus, the tank would have to be replaced or repaired for the release detection to operate again. A breach in the membrane would also break the vacuum and cause the need for its immediate repair.

Today, EPA is also proposing the limitation that an internally-fitted membrane be compatible with the substance stored. Incompatible materials could render the membrane, and the release detection system associated with it, useless overtime.

(5) Release Detection for the Piping (Section 280.42). The final requirement proposed today for interstitial monitoring is that release detection be provided for the underground piping and equipment. Double-walled tanks and internally fitted membranes do not address release detection for piping. Other secondary barrier designs likewise do not always include piping. This requirement makes it clear that owners and operators must provide interstitial or some other type of monitoring for the underground piping and equipment attached to the tank that meets the requirements of one of the other methods of detection proposed today.

(6) Issues for Public Comment. EPA is seeking public comment and information on the reliability and effectiveness of various interstitial monitoring techniques, particularly as they are used with the different secondary containment designs. Specific comments are requested concerning the appropriateness of the limitations proposed today in assuring that releases from UST systems will be detected.

EPA is particularly interested in comments regarding todays performance standard for liner systems in the excavation area. The Agency is concerned that in the absence of detailed performance standards, some liners may not perform adequately. It has been reported to EPA in the past that field-seamed flexible membrane liners frequently leak. In addition, in the absence of a permeability standard, clay liners may not be sufficiently impermeable to intercept and direct a release to the monitoring point. Comment is requested regarding experience with performance and dependability of liner systems. In addition, EPA requests comment on performance standard that could be applied to liners and other types of secondary containment for the purpose of enhancing the success of release detection.

g. Other Methods Approved by the Implementing Agency (Section 280.41(i))

As previously described, today's proposal identifies requirements and general standards of performance for several basic methods of release detection for new UST systems. However, many other techniques and devices are under development in this rapidly growing field. EPA has identified over 250 devices being commercially developed. Some methods, other than the six general ones proposed, today may also be able to successfully detect releases within varying circumstances and limits. Therefore, in 280.41(i), EPA is also proposing to allow the use of other methods, or combinations of methods, of release detection that can be shown to reliably detect releases in a manner which is no less stringent than one of the allowed methods described above.

Many different methods of release detection are under development or already available. There are numerous in-tank non-volumetric monitoring devices (for example, helium gas tracer monitoring) under investigation; several devices for use in the physical or electronic measurement for the presence of liquids or vapors in the excavation area's soil (for example, U-tubes and soil resistivity sensors); numerous products for use in completely wrapping tanks to enhance release detection; and relatively sophisticated devices reported to detect small volume releases from pressurized pipes. EPA has not evaluated the performance of all these methods and, as described earlier, has rejected a regulatory approach towards release detection that would require certification of these methods or devices in regulation before they can be used.

A major concern with these other various methods, however, is whether they perform adequately or only work properly under specific conditions. One alternative that the Agency considered was simply to not allow any of these other methods, thereby restricting the use of release detection to those methods proposed today. This was rejected, however, because EPA believes that other methods, or combinations of methods, may be shown in the future to reliably detect releases. The Agency's intent is to foster continued experimentation, development, and use of other methods that can detect releases from UST systems at least as successfully as those specified today.

To further ensure that other methods, or combinations of methods, can be used if they are shown to reliably detect releases, today's proposal allows their use if they are approved by the implementing agency. To be approved, they must be shown to perform as capably as any of the other proposed methods of detecting releases before they migrate beyond the UST excavation area and result in adverse impacts to human health and the environment. These approvals may be site-specific or more generic, depending on the performance and limitations of the methods. For example, there are some sophisticated pipeline release detection devices available and under development that may be able to reliably detect small releases from pressurized pipes. Such devices, used with appropriate release detection for

the UST may constitute a combination of methods that would be allowed by the implementing agency.

EPA is presently collecting information and conducting research addressed to various methods of release detection. Should the Agency finalize the regulatory approach proposed today, the results of these research efforts may be provided in guidance that should be helpful to implementing agencies in deciding whether other methods of release detection should be allowed. These guidances would identify criteria to be considered in judging any additional methods and their performance in comparison to these six methods proposed today.

The Agency solicits public comment and performance information concerning other methods of release detection that may be capable of detecting releases from UST systems. Information concerning the accuracy and reliability of pressurized line leak detection devices is specifically requested along with public comment on whether they should be allowed in lieu of other methods of release detection for this type of piping. Comments are specifically requested concerning the feasibility of allowing the use of other methods or release detection if they are approved by the implementing agency to be no less stringent than any one of the six methods identified today.

4. Secondary Containment For New Hazardous Substance UST Systems (Section 280.41(b))

a. Overview

As discussed in the previous section, EPA is today proposing several methods of release detection for new UST systems. However, the Agency is concerned that releases of various hazardous substances can be more difficult to reliably detect than petroleum releases. Releases of hazardous substances may not be detected by some or all of the methods allowed for petroleum because most of these techniques and devices have apparently not been designed or calibrated to detect hazardous substances. In many instances, they may never have been previously used for this purpose. In contrast, the Agency has concluded that interstitial monitoring between the UST system and a secondary barrier surrounding it is a method that should be readily available for use in the detection of hazardous substance releases. As discussed previously, there are a number of approaches to secondary barriers for UST systems including vaults, double-walled tanks, and liners. The secondary barrier outside of the UST system prevents the movement of released material into the environment and enables the use of various interstitial monitoring techniques for detecting a release between this barrier and the UST system. These barriers should be readily available for use with hazardous substances.

Today EPA is also proposing § 280.41(b) to require the use of secondary containment/interstitial monitoring at all new hazardous substance UST systems. The Agency believes that a secondary barrier provides a more controlled environment, free of many of the factors that can reduce the probability of detection of some hazardous substances when other methods of release detection are used. A properly constructed and designed secondary barrier will ensure retention of a release for detection so that corrective action can be taken under Subparts F and G of the regulations (which includes free product removal and soil and ground-water cleanup). An added benefit of the secondary barrier will be to simplify the cleanup of releases from the tank system. Only a limited area can be contaminated if the secondary barrier retains the release for purposes of reliable detection and corrective action. This is a significant benefit for some highly mobile, highly soluble, or high specific gravity hazardous substances, which are difficult to remove from the soil or ground water and pose an inherently higher level of risk to human health when coupled with unreliable release detection.

There are several interstitial monitoring techniques that can be used to detect releases of hazardous substances in the interstitial area between an UST system and the secondary barrier surrounding it. These detection devices typically detect or monitor for the presence of either vapors or liquids and can operate either continuously or manually. Manual liquid detection systems come in a variety of designs. A number of these use chemical sensitive pastes that change color when exposed to water or hydrocarbons.

Some of the continuous liquid detection systems trigger an alarm by using a device that softens or dissolves if liquid (water or hydrocarbons) appears in the interstitial space. Other types of continuous liquid detection systems use level gauges or switches to set off alarms when the liquid rises to the detection level. In all of these liquid detection systems, the sampling point is usually at the lowest point in the secondary containment structure with all areas having free drainage to this point. This interstitial area must also be sealed off from the outside environment to prevent corrosion condensation or precipitation-induced interferences to the monitoring techniques.

Most vapor sensors used for monitoring the interstitial space are continuously in operation and can be used with volatile hazardous substances. However, some manual detectors that are marketed principally as personnel safety devices may also be used. These continuous interstitial monitoring techniques are activated when the concentration of hydrocarbon vapors exceeds a preset level. The preset level is set above the background level at the time of installation. Because of the confined nature of the space between the UST system and the secondary barrier, hydrocarbon vapors from a hazardous substance release are generally expected to reach the alarm quickly.

In addition to these monitoring methods, the interstitial space between the two walls of double-walled hazardous substance UST systems can be monitored using pressure sensors. The pressure systems use either a vacuum or a pressure sensing device in the interstitial space to detect failure of the inner or the outer walls. Loss of the vacuum or pressure signifies a breach in one of the two walls.

b. Current Practices

Four states (CA, DE, RI, SC) and Puerto Rico utilize secondary containment barriers for hazardous substance UST systems. California and Puerto Rico require them for new UST systems. South Carolina requires them only in ground-water sensitive areas (aquifer recharge or drinking water well zones). Rhode Island allows them as an alternative to leak monitoring.

In all the above states, double-wall UST systems are accepted as meeting requirements for new hazardous substance UST systems. In general, they state specifications for construction or approve the tanks on a case-by-case basis. For example, the outer jacket of a double-walled tank must be constructed of coated steel and cover at least the lower 85 percent of the circumference of the tank, and no penetrations through the jacket may be present other than manholes and fittings.

Three states (CA, DE, and RI) address requirements for vaults used as secondary barriers for hazardous materials. Specifications for construction of vaults is generally not given. Some states require visual observation of tanks in vaults as a leak detection method. This requirement implies a necessity for access to the

vault and space available for observation.

Under federal regulations, secondary containment with monitoring is required for underground hazardous waste tank systems. The secondary containment barrier must prevent the migration of a release into the soil, ground water, or surface water and must meet several design, installation, and operation criteria concerning the type of containment, capacity, material selection, foundation support, release collection, and sealing from infiltration of surface or ground water. A registered professional engineer must attest that the tank system design is adequate, and an independent installation inspector or professional engineer must inspect the tank system for adequate construction and installation. Monitoring must be provided between the primary and secondary containment structures to detect releases from the primary containment within 24 hours.

c. Approach to Regulation

EPA is today proposing in § 280.41(b) that secondary barriers with interstitial monitoring be required for all new UST systems storing hazardous substances. EPA is also proposing to allow the owner and operator to use an alternative method of detection if it can be demonstrated to accurately and reliably detect releases from the UST. Owners and operators must provide a demonstration of the applicability of any of the other methods to the implementing agency for approval prior to its use. (A more detailed discussion of this alternative demonstration immediately follows in the next section of the Preamble.)

(1) General Performance Standards for Secondary Containment/Interstitial Monitoring (Section 280.41(h)). The Agency is aware that the performance and durability of the many types of secondary containment barriers and interstitial monitoring techniques is unknown. New hazardous substances UST systems must therefore meet the performance requirements of (§ 280.41(h)). Many of these interstitial monitoring systems have been in use for only a short period of time at a limited number of sites. Of particular concern to the Agency is the use of synthetic membrane liners wrapped around and in immediate contact with the tank. This type of liner system could be subject to greater stresses during installation than a typical liner system which has fine-grained backfill between the liner and the tank. The increased stresses could result from friction among the tank, liner, and backfill, while placing the tank and compacting the backfill. These stresses could result in tears that allow the escape of releases prior to detection. Another containment technology that the Agency is concerned about is the bentonite clay barriers. Certain hazardous substances may be incompatible with bentonite clays and may not be effectively retained. Also, such sealed-soils have been found by the Agency under its hazardous waste program to perform significantly less effectively than man-made flexible membrane liners, for example. (See today's solicitation of information and public comment on this subject in the previous section of this preamble addressed to interstitial monitoring).

The Agency is today requesting information and comment on the applicability of the various secondary barrier methods and interstitial monitoring techniques to UST systems that contain hazardous substances.

(2) Variance from Secondary Containment/Interstitial Monitoring Requirements for New/Upgraded Hazardous Substance UST Systems (Section 280.41(b)). (a) Overview. EPA recognizes that secondary containment with interstitial monitoring may not be necessary for all hazardous substance tanks to protect human health and the environment, and that there may be alternative release detection methods that protect human health and the environment based on the tank system characteristics, location, and stored substance.

At present, there is an extensive and rapidly growing universe of release detection methods for petroleum substances. The Agency believes that, for hazardous substances which are similar to petroleum substances, some of the release detection methods currently available may be able to provide a similar level of protection. Further, new release detection methods may be developed in the future which will provide this level of protection for other hazardous substances.

Generally, there are two procedures through which variances can be obtained: (1) They can be specified in regulations and thus be self-implementing; or (2) they can be granted through a review and approval process. However, EPA is concerned that the large size of this regulated community poses unique challenges concerning variance implementation. For example, if the Agency selects a self-implementing system, it is possible for abuses to occur. On the other hand, the review and approval oversight process for implementing variances could be logistically overwhelming.

(b) Current Practices. Of the few states that do regulate hazardous substances, most allow tank owners to apply for variances based on equivalent technologies. For example, Rhode Island will consider variances from program requirements (and does not require secondary containment) if there is clear and convincing evidence that an "alternative design or operating standard is substantially equivalent to the regulation and will have no adverse effect on public health and the environment." California regulations allow categorical and site-specific variance requests. Categorical variances allow an alternative method of construction or monitoring which is applicable to more than one local agency jurisdiction. Site-specific variances would be applicable at one or more sites within one local agency's jurisdiction. Most states grant variances through a review and approval process.

EPA recently promulgated regulations for hazardous waste storage and treatment tank systems. They contain variance procedures for tanks storing hazardous wastes. The regulations basically require phased-in secondary containment with interstitial monitoring for underground tank systems. These regulations allow both a risk-based variance and a technology-based variance. The risk-based variance can be obtained if the "owner/operator demonstrates that there will be no substantial present or potential hazard to human health or the environment in the event hazardous waste is released from the storage or treatment system." It is not available for new underground hazardous waste tank systems. The technology-based variance can be obtained if the *"owner/operator can demonstrate to the Regional Administrator that alternative design and operating practices, together with location characteristics will prevent the migration of any hazardous waste or hazardous waste constituents into the ground water or surface water at least as effectively as secondary containment with interstitial monitoring."* "This type of variance would be granted, for example, if a release detection method not believed generally reliable will be reliable for a tank system because of its characteristics, location, and other factors such as the wastes stored or treated." However, variances based on ground water monitoring is not allowed because the overall strategy for regulating hazardous waste tank systems is based on the prevention of contamination of ground water by releases from tank systems.

(c) Approaches to Regulation. EPA has considered two basic approaches for granting variances for hazardous substance tanks: A chemical class approach and a tank system-specific approach. Through the class approach, the Agency would define groups of hazardous substances that would not require secondary containment when stored in underground tanks. The tank system-specific approach would grant variances by taking into account tank contents and siting considerations. In either case the variance would waive secondary containment requirements if an alternative release detection system design and operating practices applied to a protected single-walled tank can be shown to provide reliable protection of human health and the environment.

(i) Chemical Class Approach. The Agency examined various ways to create classes of hazardous substances for which a variance could be obtained. For example, a report prepared for EPA entitled *Evaluation of Grouping Methodologies Based on Regulated Substances Properties* investigated the feasibility of classifying the regulated substances based on their physical and chemical properties for the purpose of setting different tank standards. This report concluded that, while all of the methods considered did to some degree distinguish between potential impacts of different regulated substances, the relative differences in the results were not significant enough to confidently define groups of substances for different tank standards. The report further pointed out that the currently weak understanding of some basic transport processes (e.g., movement of liquids and vapors in the vadose zone) and key data deficiencies (e.g., a uniform scale of toxicity values) decreased the confidence in the results.

A feasibility study prepared for EPA, entitled *Risk-Based Ranking of Chemicals in UST Systems,* investigated the use of a preliminary scoring technique in which the chronic toxicity characteristics used to establish reportable quantity (RQ) levels under CERCLA were used to rank the chemicals stored in underground tanks. Then a panel of scientists used this information and additional information pertaining to the potential fate of these chemicals to sort them into categories of high, moderate, and low concern. The report found that chemicals stored in underground tanks vary substantially in terms of risk. Some concerns have been raised about this method (1) that toxicity characteristics used to set RQs were developed to address spills and emergency releases rather than the long-term, low-level continuous releases anticipated from underground tank systems; (2) environmental fate parameters considered did not address the role of biodegradation; and (3) environmental fate of compounds stored in underground tanks is likely to be not only site-dependent, but also solvent-dependent.

The Agency also considered various criteria which could be used to identify groups of hazardous substances which might require less stringent tank standards. The criteria included (1) detection of the substance by vapor-phase sensors; (2) detection by the human sense of smell; (3) high toxicity; and (4) cost of cleanup. Of these approaches, the detectability of hazardous substances appeared to be the most promising criterion for grouping hazardous substances. However, only limited analysis could be performed because many of the hazardous substances are solids under standard conditions, but would be dissolved in a vast array of unknown solvents and mixtures when found in underground storage tanks. Many of the release detection methods have not been assessed for the detection of hazardous substances.

Therefore, the Agency concluded that development of class criteria was difficult primarily due to the wide variety of tank siting conditions and tank contents, the lack of some basic data, and the currently weak understanding of some basic transport and fate processes. The development and analysis of these data was judged to be very time consuming. The Agency is continuing to examine this class approach based on the above criteria and today EPA is requesting public comment and information concerning feasible ways of implementing this approach.

(ii) Tank System-Specific Approach. Based on the above discussion, EPA is today proposing that variances from secondary containment requirements be obtained on a tank system-specific basis. This type of variance would be for each tank system taking into account considerations for tank contents and siting. Variances would only be available for new and upgraded existing tank systems, and would be granted by the implementing agency through a review and approval procedure. EPA, however, is still considering the feasibility of granting variances for classes of hazardous substances if the Agency receives evidence that would justify this type of exemption.

Today, EPA has proposed simple procedures in § 280.41(b) for use in applying for individual variances. These procedures are based somewhat on the procedural framework developed for variances that are applied for under the Agency's hazardous waste tank program in 40 CFR 264.193(h). (See 51 FR 25476; July 14, 1986.) If the Agency adopts this approach, guidance for developing and applying for a variance may need to be developed to give a clearer indication of the requirements that a tank owner or operator will need to meet. It is the Agency's intent if such guidance is developed it would be somewhat flexible in approach and some initial concepts which may be included in the guidance are laid out in the subsequent paragraphs.

Today, the Agency proposes that when applying for a tank system-specific variance the owner or operator must demonstrate the reliability of the alternate release detection method(s) to be used taking into account the stored substance, the immediate subsurface tank environment, the characteristics of the tank system, and the performance characteristics of the proposed release detection method and its site-specific design. This will be accomplished in the context of the requirements for at least one of the methods of release detection proposed in 280.41. These demonstrations will be expected to receive careful scrutiny that will determine, with considerable technical certainty, if the proposed use of a particular method will meet all requirements and perform reliably in detecting releases of the hazardous substances in the proposed setting for that particular UST system configuration. This closer type of oversight by the implementing agency is believed necessary to assure that the significant technical uncertainties that now exist concerning the use of several release detection methods—particularly with various hazardous substances—will be carefully reviewed before they are allowed to be used on a long-term basis.

During the early implementation of the variance procedures it may become evident that certain combinations of hazardous substance/release detection systems may be shown to provide reliable detection (for instance, highly volatile chemicals and vapor monitoring). The Agency anticipates that these variance applications will thus be simplified by allowing the tank owners and operators to take advantage of these previously demonstrated combinations and, thus, only be required to show that the site-specific environmental factors are appropriate

for the use of the proposed release detection.

The immediate subsurface tank environment will need to be assessed to determine if the methods of detection will work reliably. This means that the excavation zone and other subsurface areas between the UST and the proposed monitor installation points must be considered in the design of the method for the site. The evaluation of this area would include an assessment of factors such as soil types, site location, historical high water table, localized ground water flow patterns as well as any potential interferences that would affect the accuracy and reliability of the monitoring devices. Interferences are considered to be such things as clay layers, buried electrical lines, or a site located in a flood plain, which could result in periodic flooding of the vadose zone affecting the performance of some release detection systems, such as vapor monitors.

The five general release detection methods proposed for use with new UST systems are available to a tank owner or operator to use as an alternative to secondary containment with interstitial monitoring: frequent tightness testing and product inventory reconciliation; testing and monitoring of vapors in the excavation area; monitoring for liquids on the ground water; monitoring for liquids in the unsaturated zone between the UST and an impermeable barrier immediately below it; and automatic liquid monitoring and inventory control inside of the tank. Because all of these methods cannot be used in all situations, certain requirements on the use of each of these methods have been set by the Agency. These requirements are described above in Section VI.D.3. When selecting an alternative release detection method, the owner and operator must demonstrate that site-specific conditions meet these requirements.

Because the current state-of-knowledge of release detection of hazardous substances is relatively weak, the burden of data development and initial analysis of specific release detection methods and their application at a site is placed with the regulated community. This includes analysis of the number and placement of monitors, the detection threshold of the monitor, and the sampling frequency to insure reliable release detection. EPA believes that this approach will foster further experimentation and allow for careful selection and application of release detection systems. Because this field is rapidly developing, the Agency believes it is incumbent upon the owners and operators to work with release detection manufacturers in the development of adequate systems. The Agency will remain open to various methods for implementation of this type of variance. For example, the appropriate detectable level could vary from chemical to chemical because the Agency would want to be sure that a release could be detected before an environmental hazard developed.

The Agency, however, has several concerns about the feasibility of this approach. For example, the Agency believes that there are some hazardous substances for which variances should not be granted. These hazardous substances would include those that are acutely hazardous, pyrophoric, or highly water reactive. A specific example of these chemicals are those classified as Poison A in the U.S. Department of Transportation (DOT) Hazardous Materials Table. The Poison A category includes seven poisonous gases and liquids which when mixed with air in very small amounts are dangerous to life. The Agency also believes that the properties of other hazardous substances would either make them not amenable to some of the alternative release detection methods, or result in more careful scrutiny of variance applications. For instance, dense liquids (those with a specific gravity greater than water) cannot use the alternative of monitoring for liquids on the ground water. Substances with toxicity greater than benzene (one of the most toxic constituents of gasoline) might suggest more careful scrutiny of proposed alternative release detection methods. These highly toxic substances could be defined as those that are in the "X" category for the toxicity criterion used to establish CERCLA RQs. Approximately 60 of the hazardous substances expected to be found in UST systems have an RQ toxicity value of "X."

EPA today requests comments on the variance procedures discussed above, and is particularly interested in comments on the feasibility of implementing a risk-based variance procedure similar to that in the Hazardous Waste Tanks rules. However, today EPA has not proposed the use of the risk-based variance procedure for tanks storing hazardous substances because of several implementation concerns which include the wide array of hazardous substances and their associated solutions and mixtures, the size of this regulated community, and the potential administrative burdens that might be imposed by such a procedure. The Agency also requests comments and information on how (and by what basis) EPA might identify chemicals that have properties similar to petroleum that could warrant regulation in the manner that is being proposed today for petroleum UST systems.

5. Additional Requirements for Piping at New UST Systems (Sections 280.42)

a. Additional Requirements for Pressurized Piping (Section 280.42(a) and (b))

One method of withdrawing substances from an UST is to use a transfer pump which is usually placed in or near the tank. This pump withdraws regulated substances from the tank and forces it under pressure through a pipe to the dispensing meter. Because the substance is under pressure, a structural failure or leak in the transfer pipe will allow it to be released. Today's proposal contains additional release detection requirements for pressurized piping systems using less than continuous monitoring.

A major concern with the use of pressurized piping systems is the potential for large releases. Data from the Agency's State Release Incidents Survey indicate that releases from piping are somewhat larger than the releases from tanks. This same data also indicates that piping is involved in 20 to 35 percent of all releases reported to the states examined in the study. The Agency suspects that pressurized piping is involved in the larger piping releases because the other approach to product transfer, which uses suction pumps, fails to operate properly when there are leaks in the pipe. Also, it is widely reported that pressurized pipe is the most commonly used petroleum withdrawal system at new installations.

In addition to the general UST system release detection methods that were discussed earlier in this Preamble, pressure-loss sensors are commercially available for use as release detection with pressurized piping systems. These methods sense the pressure in the piping when the transmission pump begins to transfer petroleum from the tank to the product dispenser. A slower than expected rise in pressure could indicate a failure in the pipe and a possible release. This type of system automatically shuts off the product dispensing pipe when the pressure does not reach the expected preset level within a few seconds. Although there is little documented performance data for these piping pressure sensing methods, they are reported to detect at least large rates of release. One currently marketed

system is claimed to detect and shutdown in the presence of releases of 2 gallons per hour. Several more sensitive systems are also currently available or under development.

The characteristics of pressurized piping described above have caused the Agency to consider not allowing its use at new UST installations. However, this method of product transfer is reported to be widely applied at newer retail gasoline outlets, for example, and is an important factor in the current design of these new stations. EPA has concluded that this method of withdrawal can be used reliably, in a manner that protects human health and the environment, if continuous release detection methods are employed to ensure potentially large "run-away" releases from pressurized piping are detected quickly so they can be minimized and contained. As described earlier in this Preamble, the Agency believes that several release detection methods may be reliably applied in a manner that will rapidly and reliably detect releases, even from the piping. However, EPA is today proposing to allow frequent release detection that is not continuous. Because of the concern that run-away releases from pressurized piping can create a large release in a relatively short period of time, today's requirements for release detection at new UST systems could allow, under the 30-day sampling frequency required under § 280.40(d), a pressurized pipe leak to develop into a large release before it is detected.

Today EPA is proposing in § 280.42(b), as an addition to the other release detection requirements, that pressurized piping release detection and shutoff devices must be used at new UST systems with pressurized delivery lines, unless the piping system is provided with:

- A continuous method of release detection that complies with requirements proposed for new USTs in § 280.41; or
- Interstitial monitoring in accordance with the UST system release detection requirements in § 280.41(h).

The Agency has concluded that the above two methods of release detection adequately address the threat posed by underground pressurized run-away leaks, provided these methods include piping in their coverage.

Each of the additional requirements for pressure piping is discussed in more detail below.

(1) Automatic Release Detection and Shutoff Equipment (Section 280.42(b)). Today EPA is proposing that pressurized piping at new USTs without continuous release detection or interstitial monitoring must also be provided with automatic release detection and shutoff equipment. Numerous such devices are already commercially available and in widespread use. One of the performance requirements proposed today concerning this equipment is that the system be capable of automatically detecting a release rate of at least 2 gallons per hour. It has been reported to EPA that there is equipment commercially available that can achieve this performance and that it is relatively inexpensive to install. EPA believes that releases from pressurized piping can often rapidly advance to a level that is greater than 2 gallons per hour and will, therefore, activate these devices. Another performance standard proposed today for this equipment is that it must automatically shut off the transfer pipe when a release greater than 2 gallons per hour is detected. To minimize adverse environmental impacts, these releases should be stopped as quickly as possible. Again, equipment is reported to be widely available and in use that will be able to accomplish this performance requirement.

(2) Issues for Public Comment. Because of the limited experience with piping release detection methods, EPA has had to develop today's proposal based on partial information. Therefore, EPA is especially seeking information regarding the field performance of pressurized piping release detectors. EPA is requesting comment on the proposed methods and limitations with supporting data where available. We are also interested in receiving information concerning experience with releases from pressurized piping and whether additional requirements proposed today are needed to protect human health and environment.

b. Exemption For Suction Piping Systems (Section 280.42(b))

Today's proposal provides an exemption from the UST system release detection requirements of § 280.40-41 as they pertain to underground piping if a suction-type piping system is used that meets certain other requirements. This method of withdrawing regulated substances from an UST uses a suction pump which is usually placed away from the tank at or near the dispensing meter. This pump draws substances from the tank by applying a suction to the transfer pipe. Because the substance is at less than atmospheric pressure, a structural failure or leak in the transfer pipe will allow air or ground water to be drawn into the pipe instead of allowing the regulated substance to be released. In addition, if the leak is large enough and a significant amount of air enters the pipe, the pump and dispensing meter will operate erratically, calling the operator's attention to a suspected failure.

Although there is a lack of performance data for suction piping systems, many of these systems are currently in use in this country. In addition, suction piping systems also are in wide use in Europe. For example, West Germany has required suction piping for several years and it has been reported that these systems are successful in minimizing releases due to piping failures because they are considered "intrinsically safe."

The apparent inherent fail-safe nature of suction piping systems has caused EPA to allow (within certain limitations) an exemption for such piping from all release detection requirements in today's proposal. The requirements in today's proposal that suction piping systems must meet in order to be exempted from all other piping release detection requirements are:

- The underground piping operates at less than atmospheric pressure;
- The piping is sloped to drain back to the tank;
- Only one check valve is included in each suction line; and
- The check valve is located directly below, and as close as practical to the suction pump.

Each of these requirements are briefly discussed below.

(1) Operating Pressure (Section 280.42(c)(1)). Today's proposal allows an exemption from release detection requirements as they pertain to piping if the underground piping operates at less than atmospheric pressure. The pressure in the soil around the pipe will be atmospheric, if above the water table, or greater than atmospheric, if below the water table. When the pressure in the pipe is less than the atmospheric pressure, a lead in the pipe will allow air or ground water to enter the pipe and the contents of the pipe will not be released. Although EPA has little documented performance data concerning the operating pressures in typical suction piping systems, EPA believes that the currently marketed systems adequately prevent releases.

(2) Piping Slope. For a suction piping system to be exempt from the release detection requirements proposed in today's rule, it must be sloped to allow the pipe's contents to drain back into the tank in the event that the suction is released. The Agency believes that simply operating the piping at less than atmospheric pressure will prevent major releases. However, small releases for the piping would still be possible if a

leak were to occur at a low point in the piping. If a portion of the piping drains to a low point rather than back to the tank, then some amount of fluid would be trapped there in the event of a loss of suction. A leak at this low point could then allow trapped fluid to be released. This type of release would be small (tens of gallons) in a typical piping layout for retail petroleum product dispensing. However, it can be easily avoided by sloping the pipe back to the tank. If suction is lost in a properly sloped piping system, the contents of the pipe will drain back into the tank. The Petroleum Equipment Institute's RPIOO-86 "Recommended Practices for Installation of Underground Liquid Storage System" recommends sloping the line one-eighth inch per foot back to the tank for all piping systems. The Agency believes that this is an easily applied measure that will prevent even small releases from the suction piping systems.

(3) Check Valves. Today's proposal also requires that only one check valve be included with each suction line to be exempt from the piping release detection requirements. The rationale for this requirement is similar to the argument for the piping slope requirements. Check valves allow the movement of fluid in only one direction and are typically used in suction piping systems to prevent the fluid from returning to the tank. The check valve maintains the prime on the pump and allows dispensing to begin as soon as the pump is turned on. In addition, pump wear would be substantially increased if the line drained back into the tank after each use. When two check valves are used, then the fluid in the line between the check valves can develop a greater than atmostpheric pressure. This situation could result from a leak in the upper check valve or a leak in the line between the two check valves. A leak in this pressurized portion of the piping could then cause a small release in a fashion similar to a release in an improperly sloped line. The Agency believes that only one check valve is needed for the proper operation of the suction piping system. However, it has been reported that some existing suction piping systems have more than one check valve due to modification and repairs in the piping systems. This practice would not be allowed under today's proposed exemption from release detection for suction piping.

(4) Check Valve Location. The fourth and final requirement that suction piping must meet to be exempt from the piping leak detection requirements is that the check valve must be located directly below, and as close to as practical, to the suction pump. This requirement ensures that as much as possible of the piping is under suction when the transfer pump shuts off. Historically, check valves have been placed in one of several locations in suction piping systems. One location that is common in older suction piping systems is at the right angled joint directly above the tank. This location allows a large portion of the piping system to pressurize to one to three pounds per square inch when the transfer pump shuts off. While this pressurization is not nearly as great as the typical 40 pounds per square inch pressure in a pressurized piping system, it could cause a release out of a leak in the piping. There are several manufacturers of check valves for use directly below the pump and they are reported to operate satisfactorily in a wide range of conditions.

(5) Issues for Public Comment. Because of the limited performance data on suction piping system, EPA has had to develop today's proposal based on partial information. Therefore, EPA is seeking information regarding the field performance of suction piping systems. The Agency is particularly interested in receiving information on the potential for releases from suction piping systems.

The Agency is also seeking comment on the need for periodic monitoring of the suction piping systems to ensure that the system is operating as intended. It has been reported that the suction piping systems in West Germany are equipped with a bleed valve below the check valve for periodic inspection of the suction line. Every fifth year an inspector opens this valve to check the condition of the suction line. Air entering the line through the open valve indicates that suction is being maintained in the piping. No air entering indicates that suction is not being maintained in the line and the check valve or piping need repair. Fluid coming out of the line through this valve indicates that the line is pressurized and the piping system is in need of modification or repair. EPA is not aware of such a system in use in this country and requests comments on the availability of this type of system and the need for it.

6. Requirements for Existing UST Systems

Today EPA is proposing to require that all existing UST systems have release detection. To meet this requirement, UST owners and operators are provided with a wide variety of different monitoring methods to choose from.

In proposed 280.40 existing UST systems are allowed to use any of the monitoring methods that can be used by new UST systems: tightness testing and inventory reconciliation, vapor monitoring, liquids on the water table monitoring, automated in-tank monitoring, interception/detection barriers, secondary barriers with interstitial monitoring, or some other no less stringent detection method, or combination of methods, approved by the implementing agency. Any method used to meet the release detection requirement must meet the performance requirements provided for each method in 280.41 for new UST systems (as previously discussed in this Preamble). It must also meet the general release detection requirements for all UST systems provided in 280.40: a minimum monitoring frequency of no less than every 30 days; use of a method that detects releases from the tank and the piping; the required use of manufacturer instructions for installation, calibration, operation, and maintenance schedules; documentation of vendor performance claims; and a site assessment when external methods are used.

In accordance with § 280.30(b), for all methods used outside of an existing UST system (for example, vapor and groundwater table monitoring), the owner or operator must also retrofit the use of spill and overfill equipment at the same time as the release detection. As discussed in more detail in Section VI.D.2 of this Preamble, existing and new spills can confound the external sensors and preclude the detection of a leak in the UST system. Thus, any existing UST system that utilizes external release detection must also be provided with spill and overfill equipment at the same time.

Because the above alternative monitoring methods for new UST systems would require retrofitting and use of wells and other equipment at existing UST systems, the Agency evaluated whether any more implementable (and less burdensome) avenues might be open. As described earlier, tank tightness testing and inventory reconciliation are the two most widely used methods of release detection for UST systems. Both of these methods have the advantage of not requiring significant retrofitting (although tightness testing may require some retrofitting) and being more readily available to the regulated community than other methods.

Therefore, EPA is proposing to allow the use of the combination of infrequent tank tightness testing and manual (or automatic) inventory reconciliation

controls as another release detection method available for use by owners and operators of existing USTs.

The performance requirements proposed for tightness testing and inventory reconciliation controls were discussed earlier in this Preamble. Therefore, the discussion that follows focuses only on this additional proposed use—on an interim basis only—of infrequent tightness testing combined with inventory reconciliation at existing UST systems. (This interim method differs in frequency from the semi-annual tightness testing and inventory reconciliation proposed as an alternative available for new UST systems).

Under today's proposal in 280.40(c), an owner and operator of an existing petroleum UST system who chooses to use the infrequent tightness testing method to meet release detection requirements must repeat the tank test at least once every 3 years for steel UST systems that are not protected from corrosion; and once every 5 years for all other UST systems. The primary basis for this distinction is the fact that unprotected steel UST systems are more susceptible to corrosion and need to be tested more frequently than the protected steel or fiberglass UST systems.

In developing this proposed frequency for tank tightness testing, EPA reviewed the various schedules for tightness testing currently used in the states. For example, Connecticut specifies a schedule based on the type and age of the UST system, with annual tightness testing required for the oldest UST systems. Rhode Island varies between 1 and 5 years depending on the age of the UST system. New York requires testing every 5 years. The states with variable schedules apply more frequent tank testing to the older UST systems. Annual tightness testing is required to prompt the retirement of old UST systems and has been reported to have that effect in the states that require it.

EPA considered establishing a tank tightness testing requirement that, like several state programs, would require all old UST systems to be more frequently tested (thereby prompting their upgrading or replacement) for several reasons. However, a significant amount of data has been collected that reveals that existing tank systems have been found to leak at all ages. Furthermore, on a national basis, many of the existing tanks appear already to be over 10 years old or their age is unknown. In either situation, significant implementation difficulties are posed for a schedule based on age. Thus, as is discussed in more detail earlier in this Preamble, EPA has instead decided to propose that all UST systems be upgraded or replaced to the new tank standards within 10 years and to require tank testing on an infrequent schedule during this interim transition period. (See Section VI.D.3 for more details.)

Under the testing frequency proposed today, the vast majority of existing UST systems (the unprotected bare steel variety) will be required to conduct a tightness test once every 3 years if they choose this alternative method of release detection. Judging from experience in California, where several alternative detection methods have been allowed but the choice of tank testing predominates, it appears likely that many owners and operators will select this one alternative method of release detection if allowed for existing UST systems by EPA. This raises a concern about whether this frequency of tank tightness testing can be accomplished for such a large portion of the existing UST systems in this universe. To alleviate this concern somewhat, the Agency decided to propose a longer time period between tests for UST systems that are protected from corrosion (the primary cause of release). Current estimates are that new fiberglass and corrosion-protected steel UST systems may comprise as much as 20 to 25 percent of the existing tank universe by the time the final rule is effective. These safer (corrosion-resistant) existing UST systems would, therefore be required to conduct a tightness test only once every 5 years. This lower demand on tank testing, plus the numerous new replacement tanks that we expect will be installed within the first 5 years of the program using various other methods of detection should enable tank testing to be reliably accomplished at this more infrequent and implementable level nationwide.

EPA solicits comments and information concerning the use of infrequent tank tightness testing combined with inventory controls at existing UST systems during the 10-year period before all UST systems have to be replaced or upgraded to the new tank standards. EPA also solicits comments and information about the appropriateness of the proposed frequency of tank tightness testing combined with inventory reconciliation allowed at existing systems. Another frequency that was considered by the Agency during the development of this proposal was to require existing tank systems to perform annual tightness testing plus inventory controls if they are not provided with frequent to continuous monitoring after the 3- to 5-year phase-in period for release detection that is also being proposed today (see Section VI B.2 for more details on the phase-in period for release detection). Annual tightness testing plus inventory reconciliation would detect releases sooner than infrequent testing and would place less dependence on manual inventory reconciliation as a release detection method. This would reduce the quantity of a release at any one site prior to detection and thereby enable reductions in the potential environmental impacts and cleanup costs.

After the phase-in period of 3 to 5 years, the vendors of tank tightness testing services, as well as the regulated community, would be in a better position than today in providing annual tightness testing. EPA requests comment on whether annual tank testing is necessary and implementable for existing USTs after this initial phase-in period.

Today's proposal allows existing hazardous substance UST systems to use the same methods of release detection allowed for new UST systems. Similarly, existing hazardous substance UST systems are allowed to use the infrequent tank tightness testing and monthly inventory controls method of detection during the 10-year interim period when all existing UST systems must be upgraded or replaced to the new tank standards (with interstitial monitoring secondary containment for hazardous substances USTs).

In developing today's proposed approach for existing hazardous substance UST systems, the Agency was concerned about the lack of release detection for these UST systems. As discussed earlier, all release detection is being developed and primarily aimed at petroleum UST systems because they represent at least 95 percent of the UST universe. Through today's proposal, the Agency intends to encourage the extension of this developing technology to the many hazardous substance UST systems storing chemicals that are similar in nature and detectability to petroleum. Any hazardous substance UST system that cannot apply accurate and reliable release detection according to the limitations proposed today will be required to upgrade to secondary containment and interstitial monitoring within 3 to 5 years.

As with new hazardous substance USTs, the Agency considered requiring all existing hazardous substance UST systems to receive a variance if they wanted to apply a method of release detection other than secondary containment and interstitial monitoring. However, this was not proposed for

several reasons. First, with over 50,000 existing hazardous substance UST systems, the Agency was concerned that the variance process, as required for new UST systems, could not be accomplished within 3 to 5 years for existing UST systems. The Agency could be overwhelmed by variance requests, because an existing UST system would have to get a variance within 3 to 5 years or retrofit/replace with secondary containment. Second, EPA believes a variance process would unnecessarily slow down the development and application of other methods of release detection to hazardous substances that are very similar in nature (and detectability) to petroleum products. Instead, EPA will provide closer oversight of the review of these applications at new and upgraded UST systems (under the variance process previously described) and this will provide important experience for both EPA and the regulated community to discover what methods of release detection can be used with which types of hazardous substances. In the absence of such experience, a variance for existing UST systems would be difficult to accomplish. Third, the Agency will require submission of an alternative demonstration (and EPA review and oversight) after 10 years. Thus, anyone using any of these methods inappropriately and who has not been discovered through routine on-site inspections) will have to demonstrate the method is reliable when all existing UST systems are to be upgraded to new UST standards.

EPA requests comments and information on the appropriateness of the above approach toward allowing existing hazardous substances UST systems to utilize an alternative method of release detection for up to 10 years without an approved demonstration. Should the Agency set a shorter time frame for upgrading hazardous substance UST systems?

7. Release Detection Recordkeeping (Section 280.43)

EPA is today proposing that all UST owners and operators must maintain release detection records capable of demonstrating compliance with the applicable requirements of release detection in Subpart D. These records must include:

- All written performance claims, and their manner of determination for the method of release detection used, as provided by the equipment manufacturer or the installer, to be maintained for a period of 5 years; and
- The results of sampling, testing, or monitoring, to be maintained for at least one year, except that the results of tank tightness testing must be retained until records are available for the next test.
- A record of all calibration, maintenance and repair of release detection equipment maintained for at least one year from the date the service is performed.

The need to maintain a record of all release detection performance claims and their derivation, is discussed earlier in the Preamble (see Section VI.D.2). Among other uses, these materials provide owners and operators an important basis with which to evaluate the future performance of the equipment at a given site. Although many owners and operators will choose to retain such information for as long as they use the equipment, today's proposal requires in § 280.43(a) that they be retained for at least 5 years. This is intended to provide the implementing agency with sufficient time to ascertain the release detection method's compliance with the regulations through routine site inspection. EPA recognizes that these records may vary considerably in detail depending upon the owner and operator's choice of method and the availability of proof of performance from the vendors of the equipment.

Proposed § 280.43(b) requires all sampling, monitoring or testing results to be maintained for at least one year, except that the more infrequent tank tightness testing results allowed on an interim basis for existing UST systems must be retained until records are available from the next test. These requirements are expected to be sufficient for an inspector to determine that the UST owner and operator is complying with the release detection requirements. For example, the results of the last tightness test (plus a year's inventory control records), or the recorded results of monthly well samples, must be inspected to determine compliance with the applicable requirements for those methods of detection. Automatic, continuously-alarmed monitoring systems need not keep records that must be maintained for one year, because compliance will be determined during a site visit that shows whether the system is operating properly.

Section 280.43(c) requires a record of all calibration, maintenance and repair of release detection equipment be kept for at least one year after the service is completed.

After the service is performed for the owner and operator, many of the methods of release detection allowed in today's proposal are implemented through the use of automated equipment that consists of sensitive electronics and instrumentation. To work properly and within the specifications of the manufacture, such sophisticated methods of detection generally need to be periodically calibrated and maintained to assure measurement performance that will achieve designed detection performance. Repairs of this equipment will be inevitable over the life of its operation. Such periodic maintenance and repairs are necessary for the release detection sensors and data analysis to be able to achieve the performance standards proposed for each method today.

Maintenance calibration and repairs will be generally performed by the equipment installer or manufacturer according to schedules and procedures particular to the type of instrumentation used. Because of the critical nature of this activity, EPA is proposing that a record of such work be maintained for one year. A copy of any invoice receipts or a completed manufactured/installer maintenance checklist signed by a technician servicing the equipment would be sufficient record to enable an inspector to assure that proper steps are being taken towards calibrating and maintaining equipment. This record must be kept for at least one year to enable an inspector to assure during an on-siste visit that the instrumentation is being properly maintained by the owner and operator to obtain meaningful and reliable detection results.

E. Reporting of Suspected Releases, Spills, and Release Investigation and Confirmation

a. Overview

All suspected releases must be investigated in order to discover if an UST is leaking. This is a necessary step prior to the abatement and remediation of a possible release. In addition, reporting of suspected and/or confirmed releases to implementing agencies allows the authorities to ensure that appropriate actions are taken to protect human health and the environment.

EPA's State Release Incidents Study indicates that most releases today are first identified by sensory observation of the stored product in the environment. More than 70 percent of the releases were identified by these observations, which include the sight, taste, or smell of the released product in ground water, surface water, sewer lines, electrical conduit/vaults, excavations, or basements. Consequently, in most cases, it is necessary to conduct an investigation to identify (or confirm) the source of the suspected release.

The release investigation and confirmation process, however, is sometimes complex. For example, the owner of an UST system may typically be reluctant to begin the process of release investigation, due to the significant cost involved. In addition, complications are posed by the development and implementation of criteria and procedures to determine the appropriate circumstances for initiation, conduct, and conclusion of the confirmation process. Also, conclusive proof of the presence or absence of an underground release is not always easily obtained because release detection methods used may yield contradictory or inconclusive results. For instance, regulated substances could be discovered in the soils surrounding the UST, yet a tank tightness test may not indicate the presence of a leak. As discussed previously in this Preamble, tank tightness test results alone cannot absolve the UST owner/operator from consideration as a possible contaminant source because this method of detection cannot detect small releases or spills. Thus, another method of release detection (e.g., test samples taken from within the excavation) must be employed to corroborate or contradict the tightness test results. When previous results contradict each other, another release detection procedure may be warranted to corroborate whether the UST is leaking or not.

The accuracy of a release detection method is often an issue of concern during a suspected release investigation. For example, inventory control is used fairly frequently as a method for confirming releases; however, it possesses a variable accuracy that is influenced by a number of factors including temperature, meter calibration, and theft. Consequently, indications of small releases by inventory control must be carefully evaluated for the influence of such factors. Moreover, confirmation by another more conclusive release detection method may be necessary. Indications of leakage obtained from other monitoring methods may need to be similarly verified. There currently exists several inventory reconciliation analysis service firms that provide such an evaluation for a fee using computerized statistical techniques.

Testing methods must be utilized with great care to provide an effective means of release confirmation. For example, as discussed in Section VI.D. of this Preamble, the use of tightness testing to confirm releases relies upon the accuracy of the test procedures. Variables such as temperature, tank end deflection, and vapor pocket formation may substantially influence the results of the testing procedures. The use of testing methods for release confirmation is further complicated by the possible incompatibility of some hazardous substances with certain testing procedures. Equipment used in some test procedures may be damaged when exposed to specific hazardous substances that are stored in underground storage tanks. Thus, care must be exercised in choosing the appropriate testing method as well as in interpreting the test results to assure compliance with the performance requirements for tank tightness testing as specified elsewhere in today's rule.

All the above concerns have prompted EPA to propose requirements for the reporting, investigation and confirmation of releases today.

b. Current Practices

A review of state and local procedures specified in regulation for release reporting, investigation, and confirmation showed that nineteen states and one local regulation (out of 23 states and 4 local regulations recently reviewed) address leak investigation and confirmation. Most require the reporting of suspected releases. They also specify the type of evidence that should raise suspicion concerning an UST system's integrity. In most cases, this involves identifying variations in the reconciliation of product inventory in excess of a specified volume, such as 0.5 percent of total weekly throughput. Other indications often specified include a rapid change in the water level in the bottom of petroleum storage tanks, the observed presence of released material in the environment, or an alarm activated by a leak monitoring system. In any case, most of these regulations require any suspected release to be reported immediately to the implementing agency.

The investigative response for a suspected release is prescribed by all of these UST regulations. Less than half of them require a release investigation that consists exclusively of tightness testing as the specified investigation procedure. Several states give a detailed set of procedures for the identification of leaking systems. In all cases, the procedure begins with a recalculation of inventory records. Further steps may include a physical inspection of readily-accessible system components, the recalibration of system dispenser meters, and the tightness testing of the tank and associated piping.

The National Fire Protection Association (NFPA) 329, "Recommended Practice for Handling Underground Leakage of Flammable and Combustible Liquids," and the American Petroleum Institute (API) publication, "Underground Spill Cleanup Manual," provide methods and procedures currently used in the release confirmation process. This NFPA "Recommended Practice" is the current national standard most often cited by existing UST regulations. It addresses release investigation methods and tightness testing procedures in great detail. The investigation process calls for checking of various potential sources and emphasizes the possibility of multiple sources. The investigation process includes physical inspection, product inventory verification, and the tightness testing of the tank and piping system. NFPA's recommended approach is to require inspection of the storage facility, verification and reconciliation of inventory records, verification of proper dispenser calibration, pressure testing of the piping system, and tightness testing of the tank system. The American Petroleum Institute (API) 1628 recommended practice addresses release investigation procedures. Multiple methods of leak confirmation are emphasized by API, as opposed to reliance on a single release detection method. The possibility of multiple sources of release at the same facility is also stressed.

c. Regulatory Approaches

(1) Reporting of Suspected Releases (Section 280.50(a)). EPA considered three approaches towards requirements for release reporting that basically differed as to when the reporting would take place:

- Reporting of any suspected release when it is discovered;
- Reporting only when preliminary investigation has begun to reveal whether a release exists or possible sources of a release; and
- Reporting only when releases are confirmed.

Today's approach is based on the first approach (with the exception of small spill reporting) because it enables the implementing agency to become involved early in the development of procedures to be undertaken for release investigation. This provides the agency with the opportunity to provide guidance to help ensure the use of practices that are appropriate to the situation. The implementing agency also needs to be informed of suspected releases because, until it is confirmed and the source is identified, most often there is a general disavowel of responsibility for "suspected releases." The second approach was not chosen

because, while it reduces the reporting to only those situations where a responsible party is actually initiating an investigation into a suspected release, it does not allow the agency as much input into the initial planning and decision of whether to proceed with an investigation. Also, once an investigation has been initiated, its course has largely been decided and this choice sometimes predetermines its eventual results. The third approach would require the least amount of interaction between the implementing agency and the regulated community because only confirmed releases would be reported. However, this approach would allow very different investigative methods for similar situations, with a wide variation in the reliability of the results. Similarly, "borderline" incidents might never be investigated or confirmed.

The Agency rejected the last two approaches primarily because significant time periods could pass before investigations were initiated or releases confirmed. During these periods, the public would not be informed as to the possibility of a release and its potential adverse impact to human health and the environment. These approaches could also result in significant increased adverse impacts in the environment prior to the identification of any need for corrective action. Therefore, today's proposal requires reporting of all suspected releases to the implementing agency within 24 hours.

Several situations have been identified by EPA as warranting such quick reporting by the UST owner and operator. Many of these conditions have already been identified as warranting investigation in the two recommended practices mentioned earlier, as well as in several state UST regulations. EPA is proposing the reporting of all the following conditions within 24 hours because they are believed to represent important indications that a release has occurred. This requirement is satisfied by a telephone call. The situations requiring reporting a "suspected release" are:

- Testing, monitoring, or sampling results that exceed the specified limitations for release detection methods as set forth in today's proposed regulations;
- Unusual facility operating conditions including:

—Erratic behavior of regulated substance delivery/dispensing equipment,
—Sudden loss of regulated substance from the UST system,
—Unexplained presence of water in the tank, or
—Physical presence of the regulated substance or an unusual concentration of vapors in the immediate vicinity of the UST that are of unknown origin;

- Detection of regulated substance or any associated vapors in areas outside the immediate vicinity of the UST such as in soils, basements, sewers, utility conduits, or nearby surface water; and
- Any spill or overfill of a regulated substance that has entered the underground environment or surface waters, with the exception of small spills that can be immediately contained and completely removed.

The Agency is seeking public comment on the need to quickly report the above conditions. Of particular interest is the question of whether the unusual facility operating conditions proposed today are of sufficient concern or conclusive enough in nature to warrant immediate reporting. Are there other operating conditions that are indicative of a potential release requiring reporting? The reportable situations proposed today will result in some false reports if the equipment indicates a release although none has taken place. Should the owner and operator have more than 24 hours to determine, perhaps in coordination with the manufacturer, if the equipment is indeed operating correctly before reporting to the implementing agency?

Another important question is the reporting of spills and overfills. The Agency believes that spills are not an uncommon occurrence at many of the facilities in the regulated community. As was described earlier, today we are also proposing to require spill and overfill controls and procedures, with control equipment immediately applied at all new tanks and phased-in at existing tanks. The concern about spills reporting is that they appear to occur very frequently and generally in small quantities. The Agency believes very little threat is posed by the smaller spills if they are contained and completely cleaned-up, including contaminated surface soils.

The Agency is proposing a "reportable quantity" (RQ) approach to indicate to the owner or operator when reporting is necessary. This approach requires reporting of aboveground releases to land in excess of 25 gallons, and of aboveaground releases to water if they result in an oil sheen on the water, in accordance with the requirements of 40 CFR Part 110. The sheen test has been a useful trigger under Section 311 of the Clean Water Act for oil spills to navigable waters. A sheen is easily recognized and does not require the sometimes difficult determination of the volume of spilled petroleum. Further, it has been supported by scientific studies which have concluded that repeated and low level releases of oil may cause harm to aquatic environments. The choice of a 25-gallon reporting threshold is linked to data showing that this amount of petroleum is often left in the delivery lines of tanker trucks after product delivery to an UST, and to an analysis done for used oil when listing this waste as a RCRA hazardous waste was proposed. See the discussion of "Two Release Categories" in Section VI.F. of this preamble (for a more complete discussion of the rationale for selecting a 25-gallon reporting threshold).

Although reporting triggers have been established for aboveground releases, this does not relieve the owner or operator of the responsibility to undertake all other appropriate elements of the corrective action process under Subparts F and G for an aboveground release that is more or less than the reportable quantity. The Agency requests comments on the appropriateness of the proposed reporting cutoff of 25 gallons for aboveground releases to land and surface water.

(2) Release Investigation and Confirmation At The Site (Section 280.51). Some of the major shortcomings described above with less than immediate reporting by the owner or operator could be alleviated by providing a detailed set of standards and procedures in regulation for owners and operators to follow in the investigation and confirmation of suspected releases. However, EPA has determined that it is not possible to comprehensively cover in regulations the wide variety of possible situations that could occur with the investigation of UST releases. The Agency examined several approaches concerning the investigation and confirmation of releases.

In addition to an exact step-by-step investigation procedure, the Agency also considered an alternative approach that would not identify any procedures but rather would leave it completely to the implementing Agency to develop, on a site-by-site basis, requirements for release investigation and confirmation. Such an approach would provide much flexibility to the implementing agency, but would also provide the added burden of performing site-by-site determinations. EPA is concerned that such an approach could actually impede the timely implementation of suspected

release investigations because it would not allow initiative to be taken by owners and operators until they were certain as to their ultimate responsibilities based on a determination by the implementing agency.

Today EPA is proposing a third approach toward release investigation and confirmation: A basic, but not detailed, set of release investigation and confirmation requirements with notification of the suspected release to the implementing agency, so that the agency can have the opportunity to require specific confirmatory actions. After the immediate reporting of all suspected releases and reportable spills, the owner and operator must take one of possibly several routes to investigate and confirm a suspected release.

It should be emphasized that the confirmation provisions of the proposed regulations require UST owners and operators to initiate investigative actions when a suspected release is discovered. After the implementing agency is notified of a suspected release, it has the option under the proposed regulations to require a specific confirmation test to be performed by the owner and operator. The implementing agency has been provided the ability to select an investigative method that will produce the best results, because sometimes additional site-specific judgments are needed in the determination of the appropriateness of a particular confirmation test at a particular site. If such specific directions are not provided by the implementing Agency, the owner and operator must follow the procedure required by the proposed regulation. Of course, the owner and operator may undertake immediate corrective action rather than the release confirmation procedures under these proposed regulations.

Proposed § 280.51 establishes that a suspected release will need to be investigated by one of the following methods:

- A site-specific investigation, as required by the implementing agency, that determines whether a release has occurred impacting ground water or soils surrounding the excavation area. The purpose of this environmental assessment is to substantiate or disprove a release at that particular location.
- If a suspected release was detected within the interstitial area between the UST and the secondary barrier around it, an investigation must be performed to determine if the interstitial monitoring is working properly. For example, a double-walled tank may be investigated by the use of a second method of interstitial monitoring instead of tightness testing the tank or conducting soil borings and analysis outside the tank to substantiate or disprove the occurrence of a release;
- When a suspected release is identified by the failure of a tank and/or piping tightness test, an investigation that included all of the following steps would be sufficient to substantiate or disprove the presence of a release. A failure of any of these tests would be sufficient to substantiate a release has occurred for the purposes of initiating corrective action under Subpart F or G.
  - —Verification and reconciliation of any available inventory records to detect whether a discrepancy exists that exceeds the performance requirements set forth in § 280.41(c)(2) (5 percent of weekly flows through or 0.5 percent of monthly flow through);
  - —After isolating the piping from the tank, the piping fails or passes a retest that must be conducted within 7 days of the initial reporting of a suspected release to the implementing agency;
  - —After isolating the tank from the piping, the tank fails or passes a retest conducted within 7 days of the initial reporting despite excavating to the tank top and checking/tightening all loose fittings, vent pipes, or other UST system equipment; or
  - —Analysis of soil core samples indicates a level of hydrocarbon or chemical contamination in the unsaturated zone beneath the UST that would warrant corrective action in accordance with Subpart F or G.
- If a suspected release is identified by an inventory reconciliation discrepancy, or other unusual operating conditions, an investigation that evaluated all the following would substantiate or disprove the presence of a release. A failure of any of the tests would be sufficient to substantiate that a release has occurred:
  - —Tanks or piping fail a tightness test (conducted within 7 days of initial reporting) performed in accordance with § 280.41(c)(1); or
  - —Analysis of soil core samples indicates a level of hydrocarbon or chemical contamination in the unsaturated zone beneath the UST that would warrant corrective action in accordance with Subpart F or G.
- With approval by the implementing agency, the performance of an alternative investigation procedure that is no less determinative than any of the above approaches and is considered a more appropriate approach by the implementing agency for the suspected release conditions.

There are several important considerations that influenced the development of the above requirements. The first is an acceptance of tank tightness testing as a valuable tool for quickly evaluating the integrity of the UST. It is a procedure that can be performed rapidly, generally with little or no retrofitting of equipment, and should reliably identify large releases. However, this test is not completely determinative and cannot detect small release rates. Thus, where proposed and used as a method for investigating suspected releases, it must be backed up by the use of soil borings samples taken out of the unsaturated zone under the UST (or some equally determinative technique approved by the implementing agency). If both methods do not reveal a release condition, then the initial cause for concern about a suspected release can be discounted.

This regulatory approach is being proposed by EPA because it requires the owner and operator to rapidly begin and complete an investigation procedure (within 7 days) in the absence of specific direction from the implementing agency. However, EPA anticipates that this important interaction between the owner and operator and the implementing agency will often take place after the reporting required in § 280.50(a). In many situations this interaction is a necessary ingredient to establishing appropriate and expeditious measures unique to investigating and confirming that a release has taken place at a particular site. For example, sometimes the implementing agency may decide that a more rigorous examination of the ground water and soils surrounding the UST is needed at certain sites because of its nearness to public or private drinking water wells, or nearby places of human habitation (a public school or private residence, for example). Thus, today's proposal is intended to also allow for the development and use of special procedures or enforcement orders by the implementing agency in lieu of the specific investigation procedures proposed today, should they appear to be warranted by that agency to assure human health and the environment is protected.

The procedures proposed today generally require that two methods of measurement be used to corroborate whether a suspected release is actually a release requiring corrective action. Thus, for example, if a monitoring method has identified a suspected release, this can be verified by tank testing and soil borings, or ground water sampling and soils analysis, or any

other combination believed equally determinative by the implementing agency at that site. Tank testing and inventory controls, however, may not be sufficiently determinative because they may not be able to detect small releases.

Another important consideration is that particular methods of investigation may be unworkable, or may not be necessary, at certain sites. Therefore, today's proposal allows for the implementing agency to approve any investigative procedure believed to be no less determinative than any of the other methods allowed. For example, tank testing may prove unworkable in high water tables or at tanks with certain configurations and equipment. Therefore, other investigation techniques can be substituted by the implementing agency (for example, chromatographic mapping of the soil gas at the site). Also, there are situations where a full investigation may be unnecessary because, for example, the owner and operator has demonstrated to the satisfaction of the implementing agency that the original cause for suspecting a release was a result of a malfunctioning monitor which has been fixed and put back into operation. Finally, there may be situations where the implementing agency decides that the "suspected release" is in fact a release requiring an immediate site assessment and mitigating actions by the owner or operator as part of a corrective action under proposed Subpart F or G of the regulation. For example, a large discrepancy found through an inventory reconciliation or a large amount of product visible in an observation well may, in the judgment of the implementing agency, be sufficient evidence that a release has occurred and that further investigation would just delay needed corrective action.

(3) Off-Site Impacts and Source Investigation (Section 280.52). There is one other release investigation situation that is now commonly occurring and, therefore, is addressed by today's proposal. As stated earlier, releases are now often occurring (given the absence of release detection practices) without the owner or operator's knowledge. These releases are discovered off-site because of impacts to such things as nearby streams, buildings, utility lines or groundwater wells. However, there can be several possible sources in any one area where an impact has occurred. Therefore, a release can be verified but the source unknown.

An investigation is needed in these situations to identify possible sources of the release and to confirm and stop the actual source(s) from continuing to release regulated substances. Because each of these investigations are unique to the area of impact and will be directed by the implementing agency, today's proposal does not attempt to establish detailed procedures on how owners and operators must carry out any release investigation and confirmation activities. These are necessarily determined on a site-specific basis. However, today's proposal does obligate owners and operators to conduct investigations to identify the source of a known release. The same methods are expected to be used as those used when investigating a suspected release on-site under § 280.51. To protect human health and the environment, the implementing agency may require the owner or operator to test the tank or equipment for tightness or structural soundness or to conduct environmental testing to determine the magnitude, extent, and effect of the release.

F. Corrective Action Requirements for Petroleum UST Systems

Today's proposal sets forth separate corrective action regulations for UST systems that contain petroleum and those that contain hazardous substances. While the basic philosophy, objectives, and structures of the two sets of requirements are the same, EPA believes two distinct subparts addressing petroleum and hazardous substance UST systems are desirable as a means of avoiding confusion over which procedures are applicable to a particular site. The Agency solicits comments on this approach. Specifically, the Agency requests comment on whether the requirements should be integrated into one subpart in which only the differences in the two processes would be highlighted.

Corrective action is comprised of those activities required or otherwise necessary to respond adequately to a release from an UST that contains petroleum.[1] These requirements apply to regulated petroleum UST systems containing petroleum and such petroleum UST systems for which tank technical standards are being deferred (i.e., are subject to exclusions) by the Agency. This proposal divides specific regulatory requirements for petroleum UST corrective action into two stages.

Stage I consists of the immediate abatement actions that all owners and operators are required to take in response to a release from an UST containing petroleum. It incorporates relevant experience of state and local UST regulatory programs and some of the main features of these programs.

Stage II addresses requirements that specify longer-term corrective action measures that owners and operators must undertake if the implementing agency determines on the basis of submitted data and a site-specific risk assessment that additional corrective action is required to protect human health and the environment. Although owners operators will undertake the corrective action, the implementing agency will determine the measures necessary to protect human health and the environment.

The following sections discuss the steps owners operators must take to respond to a release and the complementary role of the implementing agency in overseeing the owner/operators' activities.

1. Stage I: Immediate Corrective Action Steps

a. Reporting Requirements

Section 9003(c)(3) mandates that EPA promulgate "requirements for reporting of releases and corrective action taken in response to a release from an underground storage tank."

Based on available data, EPA believes that many petroleum UST releases and cleanups are currently not being reported to state and local authorities:

- A survey of UST release files in 50 states identified 12,444 state-reported releases.
- Another statistical study leads EPA to estimate that somewhere between 75,000 and 300,000 (5 to 20 percent of the million petroleum UST systems) may be leaking now or will leak in the near future.
- State and local cleanup officials have reported to EPA that typically over half of their work is triggered by reports

[1] The Agency proposes to apply the "hazardous substance" corrective action requirements to tanks containing both a petroleum and a hazardous substance if hazardous substances comprise 50% or more of the volume or weight of the total mixture. The Agency is interested in commenters' views of the feasibility (especially for a testing method) of using a concentration threshold to determine when such a mixture would be regarded as principally petroleum or principally hazardous substance, and, therefore, subject to the respective corrective action requirements. The Agency recognizes that several petroleum products (e.g., gasoline) inherently contain certain levels of hazardous substances (e.g., benzene, toluene, xylene), but regards these to be part of "petroleum" for the purposes of Subtitle I. The Agency requests comments on the frequency of, problems with, and suggested approach to corrective action requirements for UST systems containing both petroleum and a hazardous substance. The Agency believes that the largest group of such tanks contain waste oil mixed with hazardous substances (e.g., solvents).

of "nuisance conditions"—indicators of leaks from unidentified UST sources.

(1) Two Release Categories. To address the type of releases to be reported and the reporting trigger for those releases, the Agency proposes to classify releases into two categories: Releases below ground and releases aboveground. A release includes releases to secondary containment devices because the Agency believes such reporting is necessary for the Agency to ensure that released materials are removed from the secondary containment area in a timely fashion and that it is aware of any tank system repairs that may be necessary to prevent further releases from the primary tank system.[2]

Owners and operators must report all below ground petroleum releases of any amount that have been detected using the leak detection methods required by section 9003(c)(1) and described in Section VI.D of this proposal, or using any other indication of a release, such as visual observation. Although reporting of all below ground releases places a substantial reporting burden on owners and operators, the Agency views this requirement as an essential part of effective implementation and enforcement of the statutory requirements and objectives of Subtitle I because determination of the quantity of a below ground release is generally not possible.

For aboveground releases, however, EPA proposes a "reportable quantity" (RQ) approach. Above-ground releases to land must be reported if they exceed 25 gallons, and aboveground releases to water must be reported if they result in an oil sheen on the water, in accordance with the requirements of 40 CFR Part 110.

This approach recognizes the potentially high frequency of small aboveground spills (and, therefore, the potentially large reporting burden) and their limited environmental impact. Nonetheless, the Agency believes knowledge of frequent, repetitive, small releases of petroleum may indicate possible tank system and product management problems worthy of concern if allowed to accumulate. In addition, the Agency is concerned about the potential for a series of small aboveground releases of petroleum to effectively invalidate the use of some release detection methods.

The choice of the 25-gallon reporting threshold for petroleum is based on two separate rationales. The first is linked to data that show that this amount of petroleum is often left in the delivery lines of tanker trucks after product delivery to an UST. If this residual product cannot be returned to the truck, it has often been drained out around the fill pipe and spilled into the excavation area. The frequency of this kind of "routine" spillage seems to be high and of a sufficient magnitude to warrant a reporting requirement, while avoiding the requirement to report releases for much smaller quantities.

The 25-gallon reporting threshold is also based on an analysis done in establishing a CERCLA RQ for used oil when it was proposed for listing as a RCRA hazardous waste. Used oil was examined in this analysis for its aquatic toxicity, mammalian toxicity, ignitability, reactivity, and chronic toxicity. This analysis indicated an RQ of 100 pounds or about 20 gallons. As the only oil product so analyzed to-date, this analysis for used oil represents the best basis for establishment of a reporting threshold for aboveground releases to land associated with petroleum UST systems. Public comment is requested on the use of other reporting thresholds that are less than or greater than the 25 gallon threshold selected.

A reporting threshold does not reflect a determination that a release will necessarily present a hazard in that quantity and not a hazard in any smaller quantity. The Agency has found that the actual hazard will vary with the unique circumstances of the release. Extensive analysis is necessary to determine the hazard presented under a number of possible circumstances. The RQ analyses and resulting values represent a determination only of possible or potential harm.

Although reporting triggers have been established for aboveground releases, this does not eliminate the responsibility of the owners and operators to undertake all other appropriate elements of the UST corrective action process described in the proposed rule for an aboveground release that is less than the reportable quantity.

EPA solicits comments with supporting data on these two release categories, including the appropriate reporting threshold for aboveground releases to land and surface water.

(2) Reporting Within 24-Hours. Suspected releases shall be reported to the implementing Agency within 24 hours. This allows implementing officials to advise the owners and operators of the appropriateness of corrective action steps already taken and to suggest additional measures that could be implemented. This approach also ensures that the implementing agency can move quickly to assist a private party in taking corrective action or, in imminently dangerous situations, to intervene directly itself under the authority provided by Subtitle I or an approved state program. This capability for direct government response has been enhanced by the recent Superfund Amendments and Reauthorization Act of 1986, which established a fund for federal response to releases from petroleum UST systems. (Implementation of that authority is addressed below in Section VII.C. of this Preamble.)

b. Initial Abatement Requirements

If a release is confirmed in accordance with § 280.51 or 280.52, owners and operators must take all necessary actions to abate acute risks to human health and safety. The proposed requirements reflect the approaches taken in emergency responses under section 311 of the Clean Water Act and Superfund cleanups, responses to releases from hazardous waste tanks (Sections 264.196 and 265.196), as well as the experience and practices of existing state UST programs. At a minimum, these actions include stopping the release and mitigating fire and explosion hazards. Stopping the release means, at a minimum, removing as much petroleum from the tank system as is necessary to prevent further release and to allow inspection and repair of the tank system. Mitigation of fire and safety hazards may include contacting local fire and public safety officials for assistance; evacuating affected persons; installing venting systems; and recovering product leaking into subsurface structures, such as basements and sewers.

Once immediate health and safety concerns have been addressed, owners and operators must take additional steps to remove visibly contaminated soil in the excavation zone and in the immediately surrounding area.

Next, owners and operators must report these initial corrective action measures to the implementing agency. If corrective actions are taken immediately upon suspicion or detection of the release, the release and corrective action reports can be made at the same

[2] The Agency believes that the reporting of releases to secondary containment areas provides benefits for the Subtitle I regulatory program for the reasons cited. The Agency is aware, however, that such notification is presently not required for similar releases from Subtitle C-regulated tanks (40 CFR 264.196 and 40 CFR 265.196). The Agency has concluded that this difference in reporting requirements is necessary because the Subtitle I program lacks the opportunity to impose additional controls through a permitting process for tanks or facilities operating waste tanks such as is available for many regulated tanks under Subtitle C of RCRA.

time. However, initial corrective action measures must be reported no later than 20 days after a release is confirmed. If appropriate, this report should include verification of tank repair or closure.

Owners and operators are also responsible for conducting an investigation to determine the presence of free floating product on the water table. This investigation may rely on excavations, borings, or monitoring wells to identify the amount of free product, if any, present in the release area. Data generated should be sufficient to determine the need for free product removal activities. Finally, owners and operators are required to assemble from investigations of the release area or other sources, any information that the implementing agency considers necessary for completing the initial abatement actions described in these paragraphs. Possible data requirements are specified in the rule.

c. Free Product Removal

If free product is detected floating on ground water, the owner or operator must remove free product to the maximum extent possible. Unless alternative instructions are provided by the implementing agency, the owner or operator must submit a report for free product removal to the implementing agency within 30 days of confirming the release.

Removal of free product is proposed for inclusion as a Stage I activity (which will be performed at all sites where free product is discovered). The Agency believes, based primarily on state UST program experience, that mitigation of present and potential fire and safety hazards due to free product will require removal of the free product in virtually every instance. This requirement to remove floating free product to the maximum extent practicable in all cases reflects EPA's beliefs that: (a) Free product is a safety hazard if left uncontrolled, (b) free product is a continuing source of dissolved ground-water contamination, (c) free product removal is a relatively inexpensive corrective action measure, and (d) free product removal is a common practice today in nearly all UST release cases studied by the Agency.

d. Additional Site Investigation

Owners and operators are also responsible for investigating the nature and size of the release to determine the extent of additional soil and ground water contamination. This investigation may include collecting and analyzing soil samples, testing the ground water to define the nature and extent of any dissolved contamination plume, and testing adjacent drinking water supplies. While the Agency expects that collection and analysis of soil samples will be a part of virtually all such investigations, the Agency believes that ground water sampling and analysis may not be required at some sites (e.g., sites without fractures, faults or similar heterogeneous geological features) if the owners' and operators' investigation of the extent of soil contamination demonstrates that such contamination does not extend to or come in contact with the water table.

When conducting additional site investigations, owners and operators should make use of data collected during investigations conducted previously or concurrently for purposes other than corrective action. For instance, as discussed previously, § 280.40(b) of the rule requires that a site assessment be conducted to ensure that the method of external release detection selected is appropriate for the site and is designed and installed properly. Since studies of the magnitude and extent of contamination as well as the presence of free product are necessary for determining how well external release detection monitoring will work at a particular site, it is likely that data generated during a release detection site assessment will be applicable to additional site investigations conducted during corrective action. Besides, site investigation activities conducted during release detection and corrective action phases should be coordinated with efforts to assess the excavation area around the UST system prior to permanent tank closure. The activities required for this site assessment are specified at § 280.70(d) of the rule and resemble the requirements for release detection and corrective action investigations.

Information collected by owners and operators during free product removal and site investigations may be used by the implementing agency to determine whether additional information and/or a Corrective Action Plan for additional soil and/or ground water cleanup is necessary.

The above requirements comprise Stage I of the UST corrective action for petroleum tanks required by this proposal. These minimum requirements are applicable to all releases. These regulatory steps are further illustrated below in Table 3. Stage II of these proposed corrective action requirements are dependent on the risk presented by the release and are described below.

BILLING CODE 6560-50-M

Table 3

Corrective Action Process for Petroleum Underground Storage Tanks

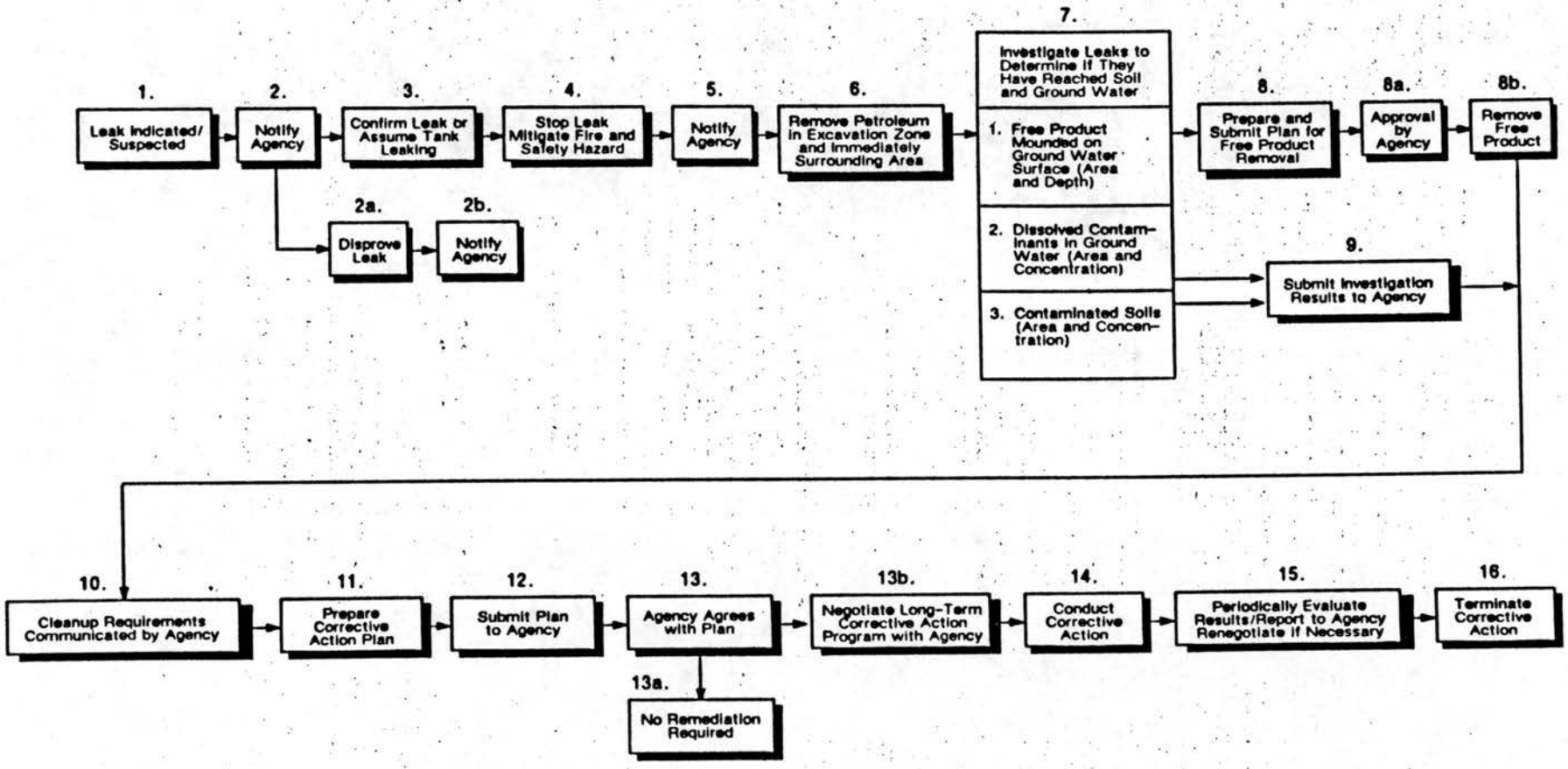

BILLING CODE 6560-50-C

2. Stage II: Longer-Term Corrective Action

Generally, reporting releases, abating acute risks, and free product removal are steps that must be taken in all cases of petroleum UST releases. After these steps, variations in the response to a release are likely to occur. Variations in the determination and implementation of appropriate longer-term remedial corrective action plans are discussed below.

To establish appropriate cleanup levels, EPA has studied various options and has evaluated state UST program experience. As a result, EPA proposes a site-specific approach for petroleum UST corrective action regulations. (For a full discussion of the options, see Section V of this Preamble.) This site-specific approach will require a risk assessment for each site to determine if and to what extent soil or ground-water contamination threatens human health or the environment.

a. Establishing a Corrective Action Plan

After the owner or operator has submitted the results of the previously required site investigations of possible soil and ground-water contamination (as described above), the appropriate implementing agency will conduct its analysis—a risk assessment—of the submitted site investigation data. Based on its risk assessment, the implementing agency will establish the requirements for additional cleanup as part of a cleanup plan that must be implemented by the owner or operator. EPA believes that some variability in how the results of the risk assessment process are used to establish cleanup requirements is required to reflect the variability in UST release sites. The Agency, however, intends to develop several tools designed to assist the implementing agency in conducting the risk assessment.

This required risk assessment must be an evaluation of the site-specific risk to human health and the environment based on data drawn from the particular site. At a minimum, the risk assessment should:

- Consider the quantity, toxicity, persistence, and mobility of the material released and include selection of indicator chemicals for use in the analysis;
- Determine the potential pathways of exposure and the number of persons who would be exposed to contamination at various intensities and durations;
- Estimate the concentrations of indicator chemicals at the exposure points identified;
- Estimate human intakes and exposures due to background sources and the release;
- Characterize the resulting risk, including the uncertainties in the risk assessment; and
- Consider the technological feasibility of corrective action measures.

On the basis of the risk assessment, the implementing agency will set the site-specific level that the owners or operators must achieve to clean up contaminated soil and ground water. Cleanup levels based on site characteristics must be identified for all affected media, including subsurface soils, ground water, and surface water. In selecting appropriate clean up levels through the risk assessment process the implementing agency may incorporate consideration of available health-based standards or a state's ground-water classification system (or the EPA's Ground-Water Protection Strategy).

The owner or operator must then submit to the implementing agency for review, in accordance with procedures established during approval of the implementing agency's program, a Corrective Action Plan for achieving the cleanup levels established through the risk assessment. An implementing agency may require owner or operator to commence cleanup before a Corrective Action Plan is approved if such action is necessary to protect human health and the environment. After the implementing agency has approved the Plan, the owner or operator must carry out the Plan. Cleanup could include excavating and repairing the tank [if this was not done as part of initial corrective action); containing the dissolved contamination plume with trenches and barriers; excavating additional contaminated soil; providing alternative drinking water supplies to area residents or applying point-of-use controls; restoring the ground-water source; restricting the use of the contaminated ground water; or allowing natural cleansing of an aquifer. Selection of a proposed remedy is the responsibility of the owners and operators, but the implementing agency must approve of the proposed remedy.

During the cleanup, the owner/operators must periodically evaluate the effectiveness of the remediation process. In some cases, the cleanup plan may be modified after these periodic evaluations. For example, existing state UST program experience indicates that the UST corrective action measures initiated with cleanup targets, which were based on the results of the risk assessment process, may sometimes reach a level at which progress toward the cleanup targets is no longer being made. In these situations, modification of the Corrective Action Plan may be appropriate to reassess the choice of a remedial measure or to allow monitoring procedures to be substituted for additional remedial measures, as long as conditions remain stable or improve.

3. Reporting Requirements

The Agency proposes that the owner or operator report all corrective actions, including all immediate response actions taken after a release is suspected or detected and all steps in longer-term corrective action. However, this proposed regulation does not specify the number of corrective action reports to be submitted or the method of reporting. EPA believes these requirements are best left to the discretion of the implementing agency, but is interested in receiving comments suggesting other approaches.

4. Responsibilities of Implementing Agencies

Implementing agencies must monitor the actions required of petroleum UST owners and operators. For example, implementing agencies are responsible for the review of all reports and summaries submitted by owners and operators. These reports include release reports, immediate abatement action reports, site investigation summaries, free product removal plans, Corrective Action Plans, and periodic progress reports on implementation of the Corrective Action Plan. The implementing agency may also assist in or undertake immediate abatement actions in response to a release.

After the owner or operator submits results of the site investigation, the implementing agency is responsible for performing and evaluating the site-specific risk and exposure assessment. On the basis of this assessment, the implementing agency determines the cleanup levels that the owner/operators must attain through response actions described in the Corrective Action Plan. Cleanup levels will be identified for all media affected by the release, including subsurface soil, ground water, and surface water. The implementing agency is also responsible for all oversight of the development and implementation of the Corrective Action Plan by owner and operators, and for the conduct of any public notice and/or public meetings on Corrective Action Plans as established in the public participation requirements of this rule (or under an approved state program).

G. Corrective Action Requirements for Hazardous Substance UST Systems

Corrective action is comprised of those activities required or otherwise necessary to respond adequately to a release from an UST system containing hazardous substances. UST systems subject to these requirements include regulated UST systems containing hazardous substances and UST systems containing hazardous substances for which tank technical standards are being deferred by the Agency.

This proposal divides specific regulatory requirements for UST hazardous substance corrective action into two stages. The first stage consists of the abatement actions that all owners and operators are required to take in response to a release from USTs containing hazardous substances. It follows requirements established for a response to a release from a hazardous waste tank regulated under Subtitle C of RCRA (40 CFR 264.196 and 265.196). Stage two addresses requirements that specify longer-term corrective action measures that owners and operators must undertake if the implementing agency determines on the basis of submitted data that additional corrective action is required to protect human health and the environment. Although owners and operators will undertake the corrective action, the implementing agency may intervene under the authority provided in RCRA or CERCLA, or as provided in an approved state program, if necessary to ensure that adequate measures are taken to protect human health and the environment.

The following sections discuss the steps owners and operators must take to respond to a release and the complementary role of the implementing agency in overseeing the owners' and operators' activities.

1. Stage I: Immediate Corrective Action Steps

a. Reporting Requirements

As with releases from USTs containing petroleum, to address the type of releases to be reported and the reporting trigger for those releases, the Agency proposes to classify releases into two categories: releases below ground and releases aboveground. A release includes releases to secondary containment devices because the Agency believes such reporting is necessary for the Agency to ensure that released materials are removed from the secondary containment area in a timely fashion and that it can be made aware of any tank system repairs that may be necessary to prevent further releases from the primary tank system.

Owners and operators must report all below ground hazardous substance releases of any amount that have been detected using the leak detection methods described in Section VI.D of this proposed rule, or using any other indication of a release, such as visual observation. Although reporting of all below ground releases places a substantial reporting burden on owners and operators, the Agency views this requirement as an essential part of effective implementation and enforcement of the statutory requirements and objectives of Subtitle I because determination of the quantity of a below ground release is generally not possible.

For aboveground releases, however, EPA proposes to base UST reporting on the reportable quantities developed under CERCLA (40 CFR Parts 117 and 302). The CERCLA RQs (i.e., reporting thresholds that warn of possible or potential hazard that should be investigated) already apply to UST releases of hazardous substances since such releases must also be reported to the National Response Center under CERCLA section 103. Although reporting triggers are proposed for notification of an aboveground release, this does not eliminate the responsibility of the owners and operator to undertake UST corrective action as required in today's proposed rule for all aboveground releases, including those that are less than the reportable quantity.

EPA solicits comments with supporting data on these two release categories, including using the reportable quantity thresholds of CERCLA to require reporting to the UST implementing agency as well as the National Response Center.

b. Initial Abatement Requirements

When a release is reported in accordance with Section 280.50, owners and operators must take all necessary actions to abate acute risks to human health and safety. The proposed requirements reflect the approach adopted for response to releases from hazardous waste tank systems regulated under RCRA. At a minimum, these actions include stopping the release and removal of any remaining hazardous substances as is necessary to prevent further release and to allow inspection and repair of the tank system to be performed. Owners/operators must take additional steps to prevent further migration of an aboveground release to soils or surface water, and remove visibly contaminated soil from an aboveground release.

Next, owners and operators must report these initial corrective action measures to the implementing agency. If corrective actions are taken immediately upon suspicion or detection of the release, the release and corrective action reports can be made at the same time. However, initial corrective action measures must be reported no later than 20 days after a release is confirmed. If appropriate, this report should include verification of tank repair or closure.

Owners and operators are also responsible for investigating the nature and size of the release to determine the extent of additional soil and ground-water contamination. This investigation may include collection and analysis of soil samples, installing of monitoring wells to identify the presence of free product, testing the ground water to define the nature and extent of any dissolved contamination plume, and testing adjacent drinking water supplies. This information, or other data that may be required, must be sufficient for the implementing agency to make a decision with respect to what type and degree of additional corrective action, if any, may be appropriate.

The above requirements comprise Stage I of the UST corrective action for hazardous substance tanks required by this proposed rule. These minimum requirements are applicable to all releases. Stage II actions of these proposed corrective action requirements are dependent on the risk presented by the release and are described below.

2. Stage II: Longer-Term Corrective Action

Generally, stopping the releases, release reporting, and containment of visible contamination are steps that must be taken in all cases of releases of hazardous substances from an UST. After these steps, variations in the response to a release are likely to occur. Variations in the determination and implementation of appropriate longer-term remedial corrective action plans are discussed below.

EPA proposes a site-specific approach for hazardous substance UST corrective action regulation. (For a full discussion of the options, see Section V of this Preamble.) This site-specific approach will require an assessment for each site to determine if soil or ground-water contamination threatens human health or the environment. As discussed in the section on additional site investigations for purposes of petroleum UST corrective action, owners and operators conducting additional site investigations for purposes of hazardous substance UST corrective action should utilize

relevant data generated during site investigations conducted for external leak detection and tank closure purposes.

a. Establishing a Corrective Action Plan

After an owner and operator has submitted the results of the previously required site investigations of possible soil and ground-water contamination (as described above), the appropriate implementing agency will conduct its analysis of the submitted site investigation data. The implementing agency may require additional assessments of the release to be performed. Based on its assessment, the implementing agency will establish the requirements for additional cleanup as part of a corrective action plan.

On the basis of the assessment, the implementing agency will set the site-specific requirements for free product removal and/or cleanup of contaminated soil and ground water that the owner and operator must attain as part of the corrective action plan. Clean-up levels based on site characteristics must be identified for all affected media, including subsurface soils, ground water, and surface water. In selection of appropriate clean-up levels through the risk assessment process, the implementing agency may incorporate consideration of available health-based standards or a state's ground-water classification system.

The owner and operator must then submit to the implementing agency for its review a plan for free product removal and for achieving the clean-up levels established through the risk assessment. After the implementing agency has approved the plan, the owner and operator must carry out the plan. Cleanup could include excavating and repairing the tank (if this was not done as part of initial corrective action); removing free product; containing the dissolved contamination plume with trenches and barriers; excavating additional contaminated soil; providing alternative drinking water supplies to area residents or applying point-of-use controls; restoring the ground-water source; restricting the use of the contaminated ground water; or allowing natural cleansing of an aquifer. Selection of a proposed remedy is the responsibility of the owner and operator, while the implementing agency must approve the proposed remedy.

During the clean-up, the owner and operator must periodically evaluate the effectiveness of the remediation process. In some cases, the clean-up plan may be modified after these periodic evaluations. For example, in some instances the UST corrective action measures initiated with cleanup targets based on the results of the assessment process may reach a level at which progress toward the cleanup targets is no longer being made. In these situations, modification of the plan may be appropriate to reassess the choice of a remedial measure or to allow monitoring procedures to be substituted for additional remedial measures as long as conditions remain stable or improve.

3. Reporting Requirements

The Agency proposes that owners and operators report all corrective action, including all immediate response actions taken after a release is suspected or detected and all steps in longer-term corrective action. However, the proposed regulation does not specify the number of corrective action reports to be submitted or the method of reporting. EPA believes these requirements are best left to the discretion of the implementing agency, but is interested in receiving comments suggesting other approaches.

4. Responsibilities of Implementing Agencies

The responsibilities of the implementing agency for tanks storing hazardous substances are similar to those for tanks storing petroleum.

H. Removal From Use, Temporary Closure, and Permanent Closure (Section 280.80)

a. Overview

When a UST reaches the end of its useful life, it must be permanently closed. Improper closure or abandonment of a UST may contaminate the environment and endanger the public health.

EPA's *State Release Incident Study* identified approximately 300 incidents implicating abandoned UST systems as the source. In addition, discussions with state officials suggest that many more improperly abandoned UST systems throughout the nation are leaking or may leak in the future. EPA believes that requirements for the proper closure of UST systems is necessary to prevent future releases from abandoned tanks.

There are two methods to permanently close a UST: Removal from the ground or closure in place. The choice of method depends on the particular site, the applicable state and local regulations, and financial considerations.

Both of these methods for permanent closure have advantages and disadvantages. Closure in place typically costs less than removal from the ground, but it is difficult to remove all product and residuals from the buried tank and to completely fill the tank with an inert material. Future construction at the site may be hampered by the presence of a UST filled with concrete or sand. Tank removal avoids these problems, but it costs somewhat more and creates a potentially dangerous situation when the tank's vapors are purged into the air. Disposal of removed tanks also presents a problem in many areas of the country.

b. Current Practices

Of the eighteen states with existing regulations for permanent closure, nearly all require the reporting of closure to the regulating authority and the removal of all product from the UST. Tanks closed in place must be filled with an inert material. Tanks closed by removal must be purged of vapors on site and either rendered useless before disposal or cleaned and prepared for reuse. Beyond this consensus, however, state regulations vary greatly. Some states allow closure in place only when tank removal is impossible or impractical. Some mandate precision testing of tanks prior to closure in place to ensure that the tank is not leaking.

Most states that address permanent closure also regulate temporary closure. These regulations allow a UST a limited time to remain out of service before it must be returned to service or permanently closed. The time limit and accepted procedures for temporary closure vary. Some states allow product to remain in the tank; others require the tank to be empty during temporary closure. Still others require that product be removed from the tank and replaced with water and a corrosion inhibitor.

There are also existing industry consensus codes, such as NFPA 30 and API 1604, which recommend procedures for permanent closure. Although these codes should ensure containment of product, they could allow a tank owner to literally cover up prior releases and leave a site that could cause future environmental contamination.

c. Today's Proposal

Today, EPA proposes a regulatory approach that builds on these existing consensus codes and state regulatory approaches. This approach will also require owners and operators to conduct a limited site assessment at the time of permanent closure. The advantage of this approach is that it will prevent contamination problems from being covered up at closure. With numerous closings of UST systems expected over the next five to ten years, EPA believes that it is important that owners and

operators of UST systems determine if there is a contamination problem before they walk away from these sites.

The proposed regulatory approach in 280.80 covers tanks temporarily out of service, and the temporary and permanent closure of tank systems. These are the topics covered by most state regulations. In summary, any tank that contains product is subject to release detection requirements regardless of whether the tank is in service. Tanks out of service for a period of time may become a receptacle for illegal dumping of hazardous materials unless the fill and delivery lines are capped. The Agency is proposing that after three months tanks must be temporarily closed, leaving only the vent line open. EPA solicits comments on the appropriateness of this time frame, and especially hopes to elicit data showing the environmental risks associated with different schedules.

At some later point, if the UST is not going to be put back in service, the system should be permanently closed. EPA believes that two years is a reasonable amount of time for a tank owner or operator to decide whether to permanently close or to re-use the tank. During this time the environment will remain protected by lines being capped and continued release detection. The Agency, however, needs to put a limit on how long "temporary" should be, and solicits comment on the 24 month limit proposed today.

(1) Temporary Closure (Sections 280.80 (a) and (b)). If a tank system is taken out of service for any period, the owner and operator must continue to maintain the corrosion protection system as well as monitor or test for leaks as required by the leak detection regulations. If a leak is detected, release investigation and corrective action regulations will apply.

A tank system out of service for 3 to 24 months must be temporarily closed. The owner or operator must:

- Continue monitoring for leaks;
- Leave the vent line open and functioning;
- Cap and secure all other lines, pumps, manways, and ancillary equipment;
- Notify the implementing agency of a return to service or permanent closure.

(2) Permanent Closure (Sections 280.80(c)–(f)). If a tank system is taken out of service for over 24 months, it must be permanently closed.

Today's proposal requires than any tank system that is taken out of service permanently must be removed from the ground or be closed in place. If the tank is removed, the owner and operator must:

- Remove all flammable liquids from the tank system;
- Remove all pipes from the UST; and
- Purge the UST of all hazardous vapors before removal and disposal.

If the tank is closed in place, the owner and operator must:

- Remove all flammable liquids from the tank system;
- Disconnect or cap all pipes; and
- Fill the tank system completely with an inert solid material.

The above steps are widely-accepted industry closure practices and are reflected in national consensus codes such as NFPA 30.

For permanent closure, EPA is proposing an additional step beyond the current industry recommended practices. The owner or operator must assess the site for contamination from the tank.

The use of release monitoring methods that utilize sensors external to the tank will meet this requirement. The owner or operator may also use such techniques as gas chromatograph mapping or the analysis of ground water or soil core samples for evidence of contamination by released product.

The purpose of this site assessment is to ensure that there is a clean site at closure. If this site assessment indicates that a release has occurred, the owners operator must perform corrective action in accordance with applicable regulations in Subparts F and G.

In an effort to keep owners and operators from improperly closing UST systems before these proposed regulations become effective and to combat contamination from UST systems improperly abandoned in the past, the Agency proposes that the closure provisions be applicable to UST systems taken out of operation prior to the effective date of these regulations. Thus, the proposal requires that UST systems that are improperly closed prior to the effective date of these regulations be revisited and properly closed. All UST systems improperly closed before the effective date of the final regulation must therefore be either removed or filled with an inert substance. There are no proposed requirements for UST systems properly closed in the past.

All owners and operators who improperly closed UST systems before the effective date of the regulation must, in addition to properly closing their systems, perform a site assessment and notify the implementing agency.

Congress expressed its concern for abandoned tanks by including tanks closed in place within Subtitle I's jurisdiction. The Agency believes that such tanks must be closed properly but believes that owners and operators who followed the NFPA code and the recommended practices described in API 1604 when they closed their tank systems, representing the state-of-the-art at the time, need not be required to revisit their tanks and conduct the site assessment required for improperly closed systems. EPA specifically solicits comments on the proposal to exempt tanks that were closed in accordance with API 1604 and NFPA 30 from the site assessment requirements.

d. Closure Records (Section 280.80(g))

EPA is proposing some basic requirements concerning recordkeeping that will ensure the closure requirements in 280.80 are being complied with. Section 280.80(g) requires that the sampling, testing, or monitoring results required during temporary closure (under § 280.80 (a) and (b)) be maintained for at least one year. Section 280.80(g) also requires that a record of the results of the area assessment performed for closure under § 280.80(d) be maintained for at least 3 years after permanent closure is completed. This closure record consists of the results of all tests, soils samples analysis, site inspections, or other site assessment methods required by the implementing agency. This record is instrumental in demonstrating that closure was performed properly. The proposed regulation also addresses the question of where records can be kept after UST system closure. In many instances, this will be conveniently accomplished at the closed site by either the owner and operator who caused the UST system to be permanently closed, or the new site owner and operator. In some instances, for example with the cessation of all operations on the site, this record may have to be kept off-site. However, this record must be made immediately available at the request of the implementing agency. The proposal also allows owners and operators the alternative of mailing a copy of these assessment results to the implementing agency, particularly if the records cannot be maintained at the closed facility.

VII. RELATIONSHIP TO OTHER ASPECTS OF THE UST PROGRAM

A. Interim Prohibition

Section 9003(g) of RCRA Subtitle I sets forth requirements for tank systems installed between May 7, 1985 and the effective date of the final rules resulting from today's proposal. During this period, UST installations used to store regulated substances must be corrosion protected, made of noncorrodible materials, or otherwise designed and

constructed to prevent releases during the operating life of the facility due to corrosion or structural failure. The tank material(s) of construction must also be compatible with the substance(s) to be stored.

The standards for new tank systems in today's proposed rules (as discussed in Section VI of this Preamble) are designed to modify and expand upon the Interim Prohibition requirements. The proposed rules include design, construction, installation, release detection, and compatibility standards for new tank installations. The Interim Prohibition requirements will continue in place until the effective date of the final rules when the standards for new tanks will replace the Interim Prohibition standards for most new UST systems. The Interim Prohibition will, however, remain in effect for those tanks which have been deferred from coverage under the technical standards in Subpart A (i.e., sumps, hydraulic lifts, bulk tanks, radioactive waste tanks, tanks containing electrical equipment, used oil tanks, and wastewater treatment tanks).

B. Notification

On November 8, 1985, EPA published the Final Rule on Notification Requirements for Owners of Underground Storage Tanks (50 FR 46602). A form to be used for the required notification was included as part of the rule.

The UST rules and standards for new tanks proposed today are not intended to affect these established notification requirements except to add to the information required to be submitted with the notification (see Section VI.B.). Owners of existing UST systems were required to notify their designated state agencies by May 8, 1986. Owners of new or replacement UST systems must notify their designated state agencies within 30 days of bringing the tank into use by submission of the November 8, 1985 federal form, or an approved alternate state notification form.

Section 9002(a)(6) of RCRA requires that, beginning thirty days after the issuance of the final new tank performance standards, and for 18 months thereafter, any person who sells a tank intended to be used in an UST system must advise the tank purchaser of the owner's notification requirements. This requirement would begin after the finalization of the new tank performance standards that are being proposed today.

C. Leaking Underground Storage Tank Trust Fund

Amendments to Subtitle I of RCRA recently enacted as part of the Superfund Amendments and Reauthorization Act of 1986 (SARA) provide for a Leaking Underground Storage Tank Trust Fund. The amendments provide funds for cleanup of petroleum spills from UST systems and give EPA, and states that enter into a cooperative agreement with EPA, the authority to respond to releases of petroleum from UST systems. These amendments to RCRA were necessary because no other federal environmental program includes specific authority for response to petroleum UST releases, although releases of petroleum affecting navigable waters can be responded to under section 311 of the Clean Water Act.

The amendments provide that the Administrator may issue an order requiring corrective action prior to the promulgation of final corrective action regulations under Subtitle I. After the promulgation of the corrective action regulations being proposed today, the Administrator may use this same order authority, under section 9003, as well as the enforcement authority of section 9006, to require owners or operators to undertake corrective action.

The Leaking Underground Storage Tank Trust Fund will be financed by taxes on motor fuels to pay for response costs in a limited set of circumstances. Before the effective date of the final corrective action rules, the Administrator, or states under cooperative agreements, may use the Fund to pay for a particular corrective action whenever that action is necessary to protect human health and the environment.

After the effective date of the corrective action regulations, the amendments provide for the use of the Fund primarily where the financial resources of the owner or operator are not available. In some cases, an identifiable and solvent owner or operator may be in compliance with all UST financial responsibility requirements (discussed elsewhere in today's **Federal Register**) but lack financial resources to pay the entire cost of a response. In those cases, the Administrator or a state with a cooperative agreement is authorized to use the Fund to pay the costs that exceed the level of financial responsibility required of the owner and operator by the final financial responsibility regulations.

If the owner and operator has failed to maintain the required level of financial responsibility, the Trust Fund may *not* be used, unless: (1) The owner or operator is insolvent; (2) there is an imminent and substantial threat to human health or the environment; or (3) there is a need to provide alternative water supplies or relocation of residents. In all other instances the Administrator, or state (under a cooperative agreement), can use the order authority provided by the Trust Fund and section 9006, to require corrective action by the responsible party prior to the use of the Trust Fund.

Before the effective date of the final corrective action regulations, cleanups carried out using the Trust Fund will be based on guidance issued by EPA. After the effective date of the final regulations, cleanups under the Trust Fund must be conducted in accordance with the corrective action regulations.

D. Exempted Tank Studies

The regulations proposed today do not apply to certain tank systems that were exempted under section 9001 of Subtitle I. Section 9009 of Subtitle I requires that EPA conduct a study of several of these systems and report to Congress by November 8, 1987. The report to Congress will include recommendations as to whether these tanks should be regulated in the future.

The Report to Congress will cover the following exempted tanks whose volume, including piping, is at least ten percent below ground:

- Farm or residential tanks of 1,100 gallons or less capacity used for storing motor fuel for noncommercial purposes, and
- Tanks used for storing heating oil for consumptive use on the premises where stored.

VIII. RELATIONSHIP TO OTHER AGENCY PROGRAMS

This section discusses the relationship of today's proposed rules to certain other EPA regulatory programs. This discussion is for informational purposes only; no new requirements are being proposed.

A. CERCLA

Section 105 of the Comprehensive Environmental Response, Compensation and Liability Act of 1980 (CERCLA or Superfund) requires development of a list of national priorities among known sites with releases and threatened releases of hazardous substances, pollutants, and contaminants. The National Contingency Plan (40 CFR Part 300) regulates development of the National Priorities List (of sites with releases) as well as appropriate

responses to the most serious releases. These regulations pursuant to CERCLA currently apply to releases of CERCLA-designated hazardous substances from underground storage tanks. CERCLA, however, does not apply to releases of petroleum from USTs or other sources.

Releases of hazardous substances from UST systems may require removal or remedial action responses by federal or state agencies, in accordance with 40 CFR Part 300. Some UST releases of hazardous substances are already included in the National Priorities List. When the final rules resulting from today's proposal become effective, owners of sites with releases from USTs containing nonpetroleum regulated substances are expected to be subject to the corrective action provisions of these rules and, in selected cases, the removal or remedial action measures of 40 CFR Part 300.

Under section 102(a) of CERCLA, EPA has promulgated regulations (40 CFR Part 302) that identify hazardous substances and quantities of releases of these hazardous substances that must be reported to the National Response Center. Those regulations contain reporting requirements for releases equal to or in excess of the established reportable quantities (RQs). Thus, UST releases of hazardous substances that exceed the RQs set forth in 40 CFR Part 302 will continue to be subject to those CERCLA reporting regulations, as well as any reporting requirements under this rule. UST releases of hazardous substances that are less than the reportable quantity will be subject to the release reporting requirements in the final published version of today's proposed regulations.

These provisions of CERCLA will not impact the vast majority of UST facilities because most facilities store only petroleum and thus are not subject to CERCLA requirements. However, for UST facilities storing regulated hazardous substances, certain releases will continue to be subject to CERCLA requirements as well as the final published version of today's proposed rules.

B. Hazardous Waste Tank Program

Under RCRA Subtitle C, EPA has promulgated regulations for UST systems containing hazardous wastes (40 CFR Part 264, July 14, 1986). The RCRA Subtitle I rules proposed today will, when finalized, apply to USTs containing "regulated substances." These regulated substances include hazardous substances defined in section 101(14) of CERCLA, *except* for hazardous wastes regulated under Subtitle C and petroleum. The exclusion of hazardous wastes within the definition of regulated substance avoids most of the overlapping jurisdiction of Subtitle I and Subtitle C. An overlap in jurisdiction does exist, however, for USTs containing petroleum wastes that are subject to the provisions of RCRA 3014. This overlap is discussed in the next section. There is also a potential overlap in jurisdiction for USTs containing mixtures of petroleum and hazardous wastes. Today's proposal resolves this potential overlap by excluding such USTs from the universe of USTs subject to the proposed requirements. Unless otherwise exempted, such USTs would be subject to the requirements of Subtitle C. It is intended that the final rules resulting from today's proposed rules will regulate, for the most part, a different set of UST systems from those regulated under Subtitle C.

C. Used Oil Regulations

Underground tanks storing used oil (e.g., automobile and truck used crankcase oil) are under the jurisdiction of Subtitle I. Pursuant to section 9001(2)(B) of RCRA, underground tanks containing "petroleum, including crude oil or any fraction thereof which is liquid at standard conditions of temperature and pressure . . ." are within the scope of Subtitle I. Thus under Subtitle I requirements, owners and operators of UST systems containing used oil were required to notify designated state agencies of the presence of such tanks by May 8, 1986. Owners and operators of newly installed used oil UST systems are subject to the requirements of the Interim Prohibition, which has been in effect since May 7, 1985.

Under Subtitle C of RCRA, EPA also has the authority to regulate recycled oil, and to regulate used oil that is disposed of under Subtitle C if such oil is identified or listed as a hazardous waste. Under the authority of Subtitle C of RCRA, EPA proposed to list used oil as hazardous waste (50 FR 49269–49270, November 29, 1985) and has proposed standards for recycled oil (50 FR 49250–49258, November 29, 1985). Since publication in the **Federal Register**, several important decisions in terms of these proposed rulemakings have been made, namely:

(1) Storage of used oil (even when recycled) will be regulated, and

(2) Recycled oil will *not* be listed as a hazardous waste (51 FR 41900, November 19, 1986).

The Agency is proposing today to defer application of the technical requirements to used oil UST systems. This is discussed in further detail in Section VI.A.4(c).

D. Stage II Vapor Recovery Program

The Agency is in the process of conducting rulemaking proceedings to decide whether and how to regulate vehicle refueling emissions. Under consideration are Stage II controls (which would be applied to gasoline pumps) or onboard canisters (which would be part of automobiles). The Agency has not yet made a decision as to which method to adopt for control of these emissions. If at some time EPA should decide to call for Stage II systems as a means for controlling emissions, the Agency would examine the interaction of these requirements with the UST Program.

E. SPCC

Under section 311 of the Federal Water Pollution Control Act, EPA has promulgated regulations for the prevention of and response to oil spills into navigable waters. These rules (40 CFR Part 112) known as the Spill Prevention Control and Countermeasure (SPCC) regulations are intended to prevent and contain releases of oil into surface waters which are navigable.

Comparatively few UST systems are subject to SPCC regulations. Only those tanks of greater than 42,000 gallons capacity that are located near navigable waters of the U.S. or adjoining shorelines may be affected. Releases from these UST systems must reach navigable waters or shorelines to be subject to SPCC response actions. For those comparatively few UST systems meeting the volume and location requirements indicated above, both today's proposed rules and the SPCC rules apply.

F. DOE High-Level Radioactive Waste Program

Under the Atomic Energy Act of 1954 (42 U.S.C. 2011 et seq.) the U.S. Department of Energy (DOE) has promulgated rules for the management of high-level radioactive waste resulting from atomic energy defense activity. DOE Orders 5480.1, 5480.2, and 5820.2 regulate the underground tank storage of these wastes including corrective actions in the event of a release.

The UST rules proposed today include radioactive waste because any radionuclide is a "hazardous substance" under CERCLA. However, in view of the differences in high-level radioactive waste from other RCRA Subtitle I regulated substances and the much larger tanks storing this waste, EPA is proposing to defer from today's

proposed rules the DOE radioactive waste facilities. Until a determination is made as to whether, and how, the proposed UST rules should apply to DOE facilities storing high-level radioactive wastes, the proposed UST rules and requirements, except corrective action and the interim prohibition requirements, do not apply to these facilities. More details are provided on this in Section VI.A.4(e).

IX. ECONOMIC AND REGULATORY IMPACTS

Section IX.A. discusses the Regulatory Impact Analysis of this proposed rule, as required by Executive Order 12291. Section IX.B. then discusses the analysis of the effects of the proposed rule on small businesses, as required by the Regulatory Flexibility Act. Requirements under the Paperwork Reduction Act are addressed in Section IX.C.

A. Regulatory Impact Analysis

1. Executive Order 12291

Executive Order 12291 (46 FR 13193, February 19, 1981) requires regulatory agencies to conduct a Regulatory Impact Analysis (RIA) for any major rule. A major rule is one likely to result in (1) an annual cost of $100 million or more, (2) a major increase in costs or prices for consumers, individual industries, federal, state or local government agencies, or geographic regions, or (3) significant adverse effects on competition, employment, investment, productivity, innovation, or the ability of United States-based enterprises to compete in domestic or export markets.

EPA has conducted an RIA to compare several regulatory alternatives for USTs, as explained in the following sections. The RIA provides an analysis based on the guidelines contained in the Office of Management and Budget's "Interim Regulatory Impact Analysis Guidance" and EPA's "Guidelines for Performing Regulatory Impact Analysis".

Based on the results of this analysis, the Agency has concluded that this proposed regulation is a major rule which produces significant net benefits to society. Average annualized costs are $210 million, which include incremental costs of installing and maintaining USTs, incremental detection and monitoring costs, incremental tank removal and replacement costs, incremental pipe repairs, and adjustments for value of product lost. Based on an existing population of 1.4 million USTs, as specified in Section II.B. of this Preamble, this corresponds to an annualized cost of $150 per UST. This increased expenditure of $150 per UST produces significant benefits due to both the prevention of releases from UST systems that otherwise would have gone undetected, as well as earlier detection of releases.

If it is assumed that the benefits of either preventing an aquifer from becoming contaminated or reducing the amount of contamination (due to earlier detection) are equal to the costs of corrective action avoided, annualized benefits are on the order of $1.53 billion or $1100 per UST. However, each potential corrective action must be evaluated on its own merits, as explained in Sections V.A.5. and V.B.4. of this Preamble. Due to the case-by-case nature of these cleanup decisions, it was not possible to quantify the precision with which a cost of corrective action avoided approach approximates benefits.

The purpose of Section IX.A.1. is to summarize the intent and findings of the RIA. Section IX.A.2. discussed the basic approach taken in the RIA, and specifies the regulatory alternatives analyzed. Section IX.A.3. lists the industries projected to be affected by the proposed action, and Section IX.A.4. discusses the methodologies employed in the cost, effectiveness, benefits, and economic impact analyses. Section IX.A.5. reviews the results of the cost effectiveness and economic impact analyses. The full draft RIA is available as part of the background documents supporting this proposed regulation. This proposed rule was submitted to the Office of Management and Budget for review, as required by Executive Order 12291.

2. Basic Approach/Regulatory Alternatives

A principal goal of Executive Order 12291 is to ensure that a regulation confers net benefit—that is, that the benefits of a regulation outweigh its costs to society. A second goal is that a regulation be cost-effective—that is, to ensure that a regulation is not selected if, among the group of feasible regulatory alternatives, there is an approach that is expected to confer benefits at least as high as the proposal but at lower cost, or to confer greater benefits than the proposal but at no greater cost. The RIA supports these goals by providing a systematic presentation of information on benefits, costs, and economic impacts in a way that clarifies the implications of alternative regulatory approaches. In addition to serving as a tool for selecting from among alternatives, the RIA process can also prove useful in developing new regulatory alternatives. However, ultimate selection of a regulatory alternative must be consistent with statutory directives.

The EPA has specific guidance regarding the contents and conduct of RIAs. The key elements of an RIA are: (1) Stating the need for and consequences of the proposal; (2) considering alternative approaches; (3) assessing benefits; (4) assessing costs; and (5) evaluating costs and benefits. These components are interdependent; for example, stating the need for the proposal, considering alternative approaches, and assessing costs all depend critically on understanding the base case in the absence of regulation. Thus, each part of an RIA must be developed with the others in mind. Certain data input and analytical steps occur more than once in addressing the key questions posed in an RIA.

The difficulties in preparing an RIA that will answer this broad array of interlocking questions are compounded by the complexity of the regulated universe and the large combination of approaches available for reducing damages. The proposed rule addresses the problem of leaking USTs by regulating several distinct groups of tanks: existing tanks and replacement tanks, including those used for petroleum and hazardous substances. The proposed rule employs a combination of approaches designed to reduce damages from these disparate populations including: Prevention of releases; early detection to minimize releases both from tanks and piping systems; and corrective action to reduce the impact of those releases that do occur.

The analytical problems posed by these goals and constraints are best addressed by combining as many of the analytical issues as possible into a single framework. That framework is the UST Model, a computer simulation model designed to yield estimates of releases and life-cycle costs for the entire UST universe. The use of this model ensures that, to the greatest extent possible, all of the data and assumptions required will be consistent across the analyses that go into the RIA. The cost outputs from the model include UST repair and replacement, detection and monitoring costs, value of product lost, and corrective action costs. Effectiveness measures include plume areas and durations that result for the leaks that occur during the period they remain undetected. The design and operation of this model are discussed in more detail in the RIA.

It was not practical to include all of the analysis directly in the UST model. Some important issues, including the

effects of the regulatory costs on businesses, risk reductions, and some other measures of benefits, were analyzed separately. However, these analyses were based on outputs from the UST model. For example, the UST model provides outputs regarding floating plumes and their duration. That information was then used in the risk analysis to characterize the dispersed plumes that resulted from the floating plumes, to provide a basis for assessing health risks due to ingestion of contaminated water.

Grouping of Potential Actions into Distinct Options. As discussed in detail in Section V of this Preamble, many actions can be taken to reduce damages from leaking USTs. They can be aimed at existing tanks, at new tanks, or at releases that have already occurred; they can emphasize leak prevention, leak minimization, or leak containment. Because the effectiveness of these various components of a regulatory strategy are interdependent, the RIA needs to account for that phenomenon. For example, the effectiveness of leak detection on reducing the ultimate damages from USTs depends on tank replacement requirements and corrective action requirements, and the effectiveness of actions taken as a result of such requirements. Thus, the approach used for the RIA is to analyze sets of components grouped into distinct regulatory options. The cost and effectiveness of these options are then computed as a whole, and compared to a "no further regulation" base case.

Base Case and Options Modeled for the Analysis. This section defines the regulatory options that were analyzed in the RIA. The prevention, detection, and corrective action components of these regulatory options are described below.

"NO FURTHER REGULATION" BASE CASE assumes no regulation beyond the interim prohibition requirements; existing tanks are mostly bare steel tanks without supplementary detection or inventory control. Tanks found to be leaking are replaced with corrosion-resistant tanks, assumed to be coated and cathodically protected.

OPTION I (Baseline level) requires manual inventory control, periodic leak detection within 3 years (5 years for corrosion-resistant tanks) for existing and new tanks, and corrosion-resistance for all replacement tanks. Given that the regulated community is allowed to choose from a variety of detection measures, the option is modeled as though half of operators choose quarterly vapor well monitoring, and the other half choose the less effective tank infrequent tightness tests every 3 years (5 years for corrosion-resistant tanks). Tanks are assumed to be replaced with coated and cathodically protected tanks with line leak detectors, and either quarterly vapor well monitoring or tightness tests every 5 years.

Steps assumed to be taken in response to a release are the same for this option as for all others. Where a release has occurred, an investigation and actions to reduce immediate hazards is followed by limited removal of contaminated soil, removal of any free product from the ground water, and ground-water cleanup at 40 percent of sites where ground water has been contaminated.

OPTION II—The Proposed Rule (Enhanced baseline plus targeted upgrading) is similar to Option I with upgrading to new tank standards within 10 years, though leak detection systems must be sampled monthly rather than quarterly and infrequent tightness tests are not permitted after tanks are replaced. For modeling purposes, operators are assumed to retrofit with cathodic protection and monthly vapor wells to meet new tank standards after 8 years. Replacement tanks are assumed to be coated and cathodically protected, with vapor wells sampled monthly.

OPTION III (Baseline plus secondary containment for new tanks) requires periodic leak detection for existing tanks and secondary containment with interstitial monitoring for new tanks. For existing tanks, this option was assumed to be identical to Option I; replacement tanks are assumed to be lined systems with interstitial monitoring.

OPTION IV (Class option) requires rapid replacement of existing tanks and secondary containment for replacement tanks at state-designated wellhead protection areas. Tanks in other areas are required to conform to baseline standards (Option I). It is assumed that 40 percent of the tank population is located within a wellhead protection area. Tanks located in these state-designated areas are assumed to be fitted with continuous vapor wells after one year, and then replaced before the fifth year with protected tanks in liners. The other 60 percent of tanks (those outside wellhead protection areas) are modeled the same as Option I. As in other options, ground water is cleaned up at 40 percent of sites where the release has reached ground water; all of these cleanups are assumed to be performed in the wellhead protection areas.

OPTION V (Emphasis on Prevention) For existing tanks, this option requires manual inventory control, frequent leak detection starting in 3 years, and early retirement. Replacement tanks must have secondary containment. Half of all existing tanks are modeled with continuous vapor well monitoring, and half are modeled with monthly vapor well monitoring and 3-year tightness tests. Existing tanks are replaced with lined systems either when they fail, or after 8 years.

3. Affected Industries

EPA has identified 3 classes of tank-owning facilities that would be directly affected by this proposed rulemaking: (1) Facilities using USTs for storing motor fuels for the retail market; (2) facilities using USTs for storing fuels for non-retail purposes; and (3) facilities using USTs for storing regulated hazardous substances. The major sector to be affected by this regulation is the motor fuel retailing sector. There are approximately 193,000 outlets selling motor fuel. Owners for these outlets range from the largest oil refiners to open dealers who own and operate a single station. Table 4 provides more detail about ownership and operation of retail motor fuel outlets.

Facilities using USTs for storing fuel for non-retail purposes cut across many sectors of the economy, both private and non-profit. Affected sectors include agriculture, mining and construction, manufacturing, utilities and transportation, wholesale trade, retail trade, services, governments, and non-profit organizations. Generally, such USTs are used to service in-house vehicle fleets.

Facilities using USTs for storing regulated hazardous substances are somewhat more limited to certain sectors of the economy. EPA has tentatively identified the following industries as owning the greatest number of chemical tanks: Industrial Inorganic Chemicals (SIC 2819); Plastic Materials and Resins (SIC 2821); Paints and Allied Products (SIC 2851); Industrial Organic Chemicals (SIC 2869); Chemical Preparations (SIC 2899); Plating and Polishing (SIC 3471); Chemical Wholesalers (SIC 5161); Petroleum Bulk Stations and Terminals (SIC 5171); Petroleum Product Wholesalers (SIC 5172); and Drycleaning Plants (SIC 7216). Subsequent analysis may reveal additional industries where a substantial fraction of facilities maintain USTs for storing regulated hazardous substances. EPA invites comment on this issue.

Economic impacts are far more likely to be significant for the retail fuel market than for the other two classes mentioned above. Reasons for this include: (1) There are no substitutes for USTs at a retail fueling facility; (2) there

are many outlets owned by small businesses and (3) there tend to be at least 3 USTs per facility, so UST costs represent a significant fraction of capital and operating expense. Thus, the economic analysis has focused on the retail motor fuel sector. Because the types of facilities in classes other than retail motor fuel are so diverse, and the potential for economic dislocation less significant (as will be discussed in Section IX.5.b.), detailed characterizations of facility types in classes other than retail motor fuel have not been developed as part of this analysis.

Table 4.—Ownership and Operation of Retail Motor Fuel Outlets

Category	Number of firms	Number of retail outlets owned and operated	Number of retail outlets owned and leased	Total retail outlets
Refiners	27	9,964	36,817	46,781
Jobbers	8,766	25,333	20,713	46,046
Convenience stores	516	14,732	0	14,732
Independent Chains	125	4,010	1,127	5,137
Open dealers	80,304	80,304	0	80,304
Total	89,738	134,343	58,657	193,000

4. Methodology Employed

This section specifies the methodologies used in this analysis. Methodologies are presented for costs, effectiveness, benefits, and economic impacts.

a. *Cost Estimation Methodology.* Estimating the costs of the proposed regulation requires the following: (1) Base case specification (i.e., from where are costs counted?); (2) cost element specification (i.e., which costs per tank are counted?); (3) tank universe specification (i.e., how many tanks are affected and how is this universe distributed over the relevant characteristics that affect costs and effectiveness?); and (4) accounting framework for costs (i.e., how are costs counted?). These are addressed in turn.

Base Case. The base case represents the point from which incremental costs and benefits of the proposed regulation will be estimated. The base case for this analysis is the status quo under the 1984 RCRA Reauthorization Amendments, which includes the Interim Prohibition against installing new bare steel tanks in corrosive settings. Any upgrading beyond this is included as a regulatory cost, even if such upgrading were voluntary. This ensures that regulatory costs are not understated.

Cost Elements. The major categories of costs include: (1) initial facility costs (includes obtaining and installing new tanks); (2) detection and monitoring costs; (3) value of product lost; (4) tank removal and replacement, and pipe repairs; and (5) corrective action costs. Cost element 1 applies only to new tanks. Cost element 2 applies to all tanks. Cost elements 3, 4, and 5 apply only to leaking tanks. All costs are based on best available engineering estimates. Only cost elements effected by the proposed rules are analyzed.

Tank Universe. Descriptive data on the tank universe comes primarily from studies by EPA contractors, Census data, and industry sources. Key assumptions include number of tanks, age distribution, the distribution of hydrogeological settings, and the number of new tanks installed annually. These are documented in the Regulatory Impact Analysis.

Accounting Framework. Costs are estimated on a present value basis, based on costs incurred over a 30-year modeling period starting at the time of promulgation. The real discount rate used for the analysis is 3 percent per year. In the base case, tanks are assumed to last until leaks are detected, so the time horizon for operation and maintenance costs for existing tanks varies with each tank modeled. The cost of installing a replacement for each tank that fails and operating that tank up to the end of the 30-year time horizon is calculated for all tanks. All costs are presented on a pre-tax basis, so as to best capture the real resource costs to society.

b. *Effectiveness Estimation Methodology.* The benefits of improved release prevention and detection methods result from avoiding future release incidents or detecting releases earlier to reduce damages. Presumably, the benefits of avoiding such future pollution incidents can be valued. Such benefits include the on-site benefits of reduced health and safety risks, reduced material and structural damages, and improved inventory management. In addition, there are off-site benefits relating to improved health and safety, avoided property damage, improved aesthetics, option value, and existence value for the environmental media of soil, ground water, surface water, and air. The process of valuing such benefits is quite difficult and time-consuming, and is still ongoing. For that reason, the analysis of regulatory options presented in the Regulatory Impact Analysis focuses on the trade-off between costs and plume area avoided. Plume area avoided is a measure of the magnitude of contaminated ground water that is avoided due to a regulatory option. The underlying assumption is that benefits are directly proportional to plume area avoided.

For any given regulatory option, costs and effectiveness are modeled through the UST model. The UST Model provides a systematic basis for evaluating how different regulatory options would be expected to reduce the damages that motivate regulation. The UST Model provides information about the performance of different combinations of tank types and detection methods in different hydrogeologic settings. The cost outputs include the costs associated with product loss, UST repair and replacement, detection and monitoring, and corrective action. Measures of damages include plume areas and durations that result from the leaks that occur during the period they remain undetected. Thus, costs and effectiveness of any regulatory option are modeled by estimating costs and damages associated with the base case, costs and damages associated with the regulatory option, and subtracting.

c. *Benefits Estimation Methodology.* To the extent feasible, the benefits of today's proposed rule are estimated by predicting the reduction in damages which would occur if it were implemented, compared to a base case of no further regulation. There are numerous difficulties in estimating damage reductions, stemming partly from the large number of potentially important types of damages USTs can cause, partly from the difficulties in measuring and predicting damage reductions, and partly from the problems of valuing in dollars many of the most important damages.

In light of these difficulties, the approach used in measuring benefits is to estimate the monetary damages avoided by the regulatory options, and to supplement this with estimates of other avoided damages (such as damage to the health of individuals exposed to released products, and option/existence value of ground water) that are very difficult to express in monetary terms. Three basic steps must be taken to estimate monetary damages from leaking USTs: (1) Identification of the types of damages; (2) valuation in dollars of the damages estimated to occur; and (3) estimation of the frequency and extent of the different types of damage. In-depth studies of actual cases of damage from USTs were used to develop data for the first two steps. UST Model simulations were combined with data from EPA's State

Release Incidents Survey for estimates of the frequency of damage incidents under the base case and under the regulatory options.

Forty-four case studies of UST release incident damages were used to identify the types of damages caused by leaking USTs and place monetary values on some of the major types of damage. Damages were valued in dollars by estimating the actual sums spent to repair damages caused by releases (e.g., replacing contaminated wells, compensation for damaged structures) plus the losses to businesses closed or disrupted by the releases and the contamination they caused. The advantages of this approach include: (1) Damaged parties may identify damages that would otherwise be overlooked; (2) reported damages are "real" rather than abstract; (3) damaged parties may be able to provide monetary estimates of the damage costs; and (4) damaged parties can indicate intangibles.

There are disadvantages to this approach, however. The case study selection process probably identified and profiled incidents causing more damage than is typical from a release. Consequently, the findings must be interpreted with caution. Because they are not typical or average cases, scaling them up to estimate nationwide total damages may not accurately reflect benefits.

Given a distribution of monetary damages associated with serious release incidents, total damages are calculated using estimates of the number and size of leaks under the base case, the proposed rule, and various regulatory options. These estimates are made using the UST Model of tank system failures and releases. Data from the State Release Incidents Survey provide estimates of frequency with which releases of various sizes are likely to have serious consequences (e.g., lost drinking water, or vapor contamination). UST Model predictions of the timing of the damage incidents are used to discount the monetary damages back to the implementation time of the regulations, providing estimates of the present value of the damages.

The risks avoided by the proposed rule were not considered in the same framework discussed above, due to the problem of valuing health risks. Instead, the UST Model's outputs in terms of predicted frequencies and magnitudes of contamination incidents were used as inputs into a separate analysis of concentrations of carcinogens at various possible exposure points, the size of the exposed populations, and the duration of exposure. The UST Model, linked to a ground-water transport routine, provided all inputs except estimates of the size of the exposed population at different exposure points. The exposure estimates were made using estimates of private and public well distributions relative to USTs, based on nationwide Census data supplemented with in-depth case-by-case mapping exercises.

Other categories of benefits not readily amenable to valuation in dollars include aesthetic concerns, option value, and existence value. Although a contingent valuation approach provides some hope for ultimately being able to monetize such phenomena, such analysis has not yet been conducted. EPA invites comment on the general issue of benefits assessment of today's rule. EPA is particularly interested in comments regarding the valuation issues addressed above. The benefits analysis conducted to date is contained in the RIA.

d. *Economic Impacts Estimation Methodology.* Economic impacts result from the costs attributable to the regulatory alternative. The EPA guidelines for performing regulatory impact analysis recommend an analytical approach based on combined financial and market analysis, consisting of the following steps: (1) Segment the regulated industry into groups by relevant characteristics; (2) perform baseline financial analysis on segments or on model plants; (3) separate resource costs from transfers, such as taxes, that distribute the resource costs to parties other than the directly regulated community; (4) estimate effects of cost pass-throughs, including the assumption (and estimated likelihood) of no pass-through; and (5) where data allow, perform discounted cash flow analysis or return-on-investment analysis. The results will estimate the impacts of regulatory costs on firm or facility revenue and profit for the segments of the regulated industry. This is the basic approach employed in this Regulatory Impact Analysis.

According to the EPA guidelines, the general framework to be used is based on the static partial equilibrium model of supply and demand relationships in the affected markets. In this model, if regulations on suppliers increase the costs of providing a particular good or service, the market price of the affected good or service will increase and the amount provided to the market will decrease at any given price (i.e., the supply curve will shift upwards). In the short run, increased variable costs will determine the extent of supply curve shifts, though in the long run, fixed costs will also affect supply. The magnitude of the effects will depend on the relative sensitivity of supply and demand to changes in price (that is, the price elasticities of supply and demand). Economic effects (i.e., changes in profitability, plant closures, employment, inflation, capital availability, etc.) all flow from the changes in prices and quantities predicted by appropriate shifts in supply/demand schedules within the partial equilibrium framework. At a minimum it is helpful to examine the bounding cases of perfectly elastic demand (full absorption) and perfectly inelastic demand (full pass-through).

For the 3 classes affected (i.e., retail motor fuel USTs, non-retail motor fuel USTs, and hazardous substances USTs), the extreme case of full cost absorption is likely to be of most concern. This is the case because within any sector, UST regulatory requirements will not affect establishments uniformly. For example, for retail motor fuel, UST regulatory costs are independent of quantity of gasoline pumped. Therefore, regulatory costs per gallon are likely to be much less for high volume stations, thus limiting the potential for pass-through.

Thus, economic impacts analysis focuses on the extent to which the proposed regulation will affect the viability of firms. A return on assets approach is used in this analysis as the basic measure of viability. Return on assets was chosen because the rate of expected return on assets is reasonably consistent across size classes and across industries. Furthermore, documented benchmarks exist which correspond to likely failure and severe financial distress.

As with any environmental regulation, adverse economic effects on the industries directly affected are offset somewhat by potential economic gains for industries providing the goods and services as required by the proposed regulation. In this case, tank manufacturers, providers of leak detection equipment and services, and corrective action providers stand to gain from the proposed regulation. However, EPA's Guidance on Executive Order 12291 suggests that the economic impacts analysis should focus on the primary industries affected, not on those receiving secondary economic benefits. That is the approach followed in this regulatory impact analysis.

5. Results

a. Analysis of Cost and Effectiveness of UST Regulatory Options

This section presents and discusses cost-effectiveness exhibits showing the results of the analysis of the proposed rule and the alternative regulatory

options. The analysis shown is for the nation as a whole, considering the distribution of tank characteristics by age and hydrogeologic setting. All costs shown are for a population of 1.4 million tanks. Costs are for a 30-year period and are discounted at 3 percent.

The corrective action costs were calculated assuming the floating plume and some contaminated soil are removed at all sites where there is ground water contamination (50 percent of releases are assumed to result in ground-water contamination). In addition, the dispersed plume is removed at 40 percent of all sites where there is ground-water contamination, on the assumption that at 40 percent of all sites with ground-water contamination, a leaking facility will threaten a nearby ground-water well. Actual costs for corrective actions will differ from those presented here depending on the frequency that extensive cleanup actions are actually judged to be needed under site-specific criteria.

The analysis shows that the proposed rule and all of the alternative options could provide a great degree of protection relative to a "no further regulation" base case. The results could also be used to identify the most effective and least costly option. The reader must be cautioned, though, that this use of the analysis could be misleading because the ordering of the options in terms of cost and effectiveness is quite sensitive to changes in assumptions (e.g., assumptions about the effectiveness of detection methods). In addition, the identity of the apparent "low cost option" for technical standards is significantly affected by assumptions regarding the appropriate level of corrective action. Sufficient information is not yet available to ensure that the assumptions used in the analysis adequately reflect reality. The sensitivity of the results to changes in some key assumptions is presented further below. EPA is currently pursuing additional analyses where analytical results are sensitive to such key assumptions. EPA also invites comment on these issues.

TABLE 5 shows the cost and effectiveness of the technical standards of each of the five regulatory options compared to the "no further regulation" base case. It does not include the costs of corrective action regulations. Table 5 shows that all the options can provide substantial improvements over the "no further regulation" base case: between 54 and 83 percent of the floating plume area that would occur under the base case is avoided by the various options. The main reasons for this improvement are the inventory control and periodic monitoring requirements for existing tanks in each option. Any program requiring at least inventory control in combination with periodic leak monitoring will alleviate a large portion of the potential damage from leaking underground storage tanks. Base detection (reflecting primarily sensory perception with some crude inventory control) is assumed to detect releases greater than 3 percent of monthly throughput. Inventory control is assumed to detect releases greater than 0.5 percent of monthly throughput, though only 25 percent of the time. Tank tightness tests are assumed to detect releases greater than 0.15 gallon per hour 90 percent of the time. Vapor wells are assumed to detect 70 percent of all releases. Effectiveness assumptions for other leak detection methods are detailed in the RIA. The more protective options are generally shown to have greater total present value costs, since they require earlier and more expensive upgrading of existing tanks. Today's proposal (originally Option II) ranks high in both effectiveness and cost minimization, partly because tank upgrading is a cost-effective means of minimizing releases from existing tanks.

TABLE 5.—COST AND EFFECTIVENESS OF OPTIONS: NO CORRECTIVE ACTION

Scenario	Total present value cost	Annualized cost (billions of dollars)	Plume area avoided relative to base (percent)
Base case (No further regulation)	31.0	$1.58	0
Today's proposal (Originally Option II)	35.0	1.79	67
Regulatory Alternatives			
Option I (Baseline level of regulation)	33.0	1.68	54
Option III (Stringent for new tanks)	43.0	2.19	55
Option IV (Classes)	45.0	2.30	68
Option V (Stringent)	56.5	2.88	83

Note: Annualized costs calculated from total present value of all capital and operating costs, smoothed over 30 years at 3%. Annualization factor is 0.051 of total present value costs.

TABLE 6 shows the dramatic change in both absolute and relative costs of the options when the costs of corrective actions are included. The base case jumps from the lowest in cost to the highest in cost, by many billions of dollars. This is because it is so lacking in protection that the costs of cleaning up the plumes that it allows to occur are extremely high. At the opposite extreme, the most protective technical options are revealed to save more than their incremental cost in avoided corrective action.

TABLE 6.—COST AND EFFECTIVENESS OF OPTIONS: WITH CORRECTIVE ACTION COSTS

Scenario	Total present value costs	Annualized cost (billions of dollars)	Plume area avoided relative to base (percent)
Base Case (No Further Regulation)	120.8	$6.16	0
Today's Proposal (Originally Option II)	94.8	4.84	67
Regulatory Alternatives			
Option I (Baseline Level of Regulation)	113.9	5.81	54
Option III (Stringent for New Tanks)	118.6	6.05	55
Option IV (Classes)	95.1	4.86	68
Option V (Stringent)	97.1	4.95	83

Note: Annualized costs calculated from present value of all capital and operating costs, smoothed over 30 years at 3%. Annualization factor is 0.051 of total present value costs.

Options II and V are shown to be the most cost-effective options, though the differences among options are relatively small and quite sensitive to a number of uncertain assumptions. The performance of these two options illustrates the effectiveness of early retirement or upgrading of bare steel tanks, and frequent leak detection. The relative cost-effectiveness of Option V also illustrates that the most effective regulatory alternatives can, in fact, be the least costly in the long run because effective leak detection and early retirement and replacement of bare steel tanks with corrosion protected tanks eliminates a large proportion of potential corrective action costs. This result, of course, depends on the level of corrective action assumed to be appropriate.

Option III is the most costly alternative because tanks are replaced with secondary containment only after they leak. Corrective action costs are higher than the corrective action costs for the options requiring mandatory retirement. Option III also has high facility costs due to the secondary containment requirement for new tanks. Option III is, however, effective; it may eliminate 80 percent of the potential plume area. It is more costly than other options which have the same relative effectiveness.

Sensitivity of Results to Assumptions. The cost-effectiveness of the options is strongly affected by several of the assumptions used in the analysis of the options.

One important source of uncertainty in predicting the effects of the options is that many options allow choices. Option I, for instance, allows either quarterly vapor wells or tightness tests every five years. The analysis assumed that half of tank owners choose each method, but there is no way to be sure how the owners would actually choose. These choices are important because the two methods are substantially different in cost and effectiveness. If 100 percent vapor wells were chosen, and if vapor wells were as reliable as assumed in the modeling (able to detect 70 percent of releases) Option I would be less costly than any other option, even considering the cost of corrective action. This result is, however, sensitive to unverifiable assumptions about the operation of vapor wells.

The assumed effectiveness level of leak detection or leak monitoring alternatives has a direct effect on the results of the analysis. If leak detection is assumed to be effective and reliable, it can be shown to be highly cost-effective. On the other hand, if more conservative assumptions are made concerning its performance, it can be shown that options that protect against releases with more certainty (e.g., early retirement and secondary containment) are more effective. For example, if the proposed regulation is run through the model assuming all UST's use vapor wells and that those vapor wells detect 70 percent of releases, 68 percent of base case plume area is avoided. If vapor wells are assumed to detect 90 percent of releases, 76 percent of base case plume area is avoided. If vapor wells are assumed to detect 50 percent of releases, 59 percent of base case plume area is avoided. Additional sensitivity analysis is presented in the RIA.

The level of corrective action required and the estimated cost of corrective action will affect both the absolute cost of the options and the relative cost between options, as discussed in Sections V.A.5. and V.B.4. As corrective action costs increase, the absolute cost of the options increase. Also, increasing the estimated costs for corrective action will cause options requiring frequent leak detection or early retirement for existing tanks and secondary containment for new tanks to appear to be relatively more cost effective. At present, corrective action costs used in the model range from $26,000 to $388,000, with $140,000 being the corrective action cost for responding to the median plume.

A particularly important assumption, in light of its prominence in the proposed rule, is that retrofitted cathodic protection will stop localized corrosion of bare steel tanks, allowing them to perform virtually as well as new tanks, as discussed in Section VII.E.b.

Other assumptions that could affect the results include assumptions about the mix of hydrogeologic settings in which tanks are found, the discount rate used in computing present value costs, and the frequencies and costs associated with "false alarms," in which a detection method erroneously indicates that a system is leaking. Sensitivity analyses for these various assumptions are presented in the RIA.

As stated previously, EPA is pursuing additional analyses to help clarify some of these issues raised above. EPA invites comment on these issues.

b. Analysis of Economic Impacts

Economic impacts need to be considered for 3 previously mentioned classes of facilities with USTs: (1) facilities using USTs for storing motor fuels for retail marketing; (2) facilities using USTs for storing petroleum products for purposes other than retail motor fuel marketing; and (3) facilities using USTs for storing regulated hazardous substances.

Economic impacts are far more likely to be significant for the retail motor fuel marketing class than for the other two classes mentioned above. As stated previously, reasons for this include: (1) There are no substitutes for USTs in retail motor fuel marketing; (2) there are many outlets owned by small businesses; and (3) there tend to be at least 3 USTs per facility, so UST costs represent a significant fraction of capital and operating expense. Thus, the economic analysis has focused on the retail motor fuel marketing sector.

Economic impacts have been assessed for the retail motor fuels marketing class using a return on assets measure, as discussed in Section IX.A.4. That analysis has shown that, under the assumptions of no revenue increase per facility and limited ability of small firms to get loans to cover compliance-related costs, the burden on small firms could be significant. Because it is likely that small firms would bear a large share of the economic impact, these potential economic effects are discussed further in Section IX.B. (Regulatory Flexibility Act).

For the class of facilities using USTs for non-retail motor fuel storage, the option exists to cease using USTs and purchase motor fuel at retail. Thus, there are limits on the burden these facilities will face due to UST regulatory requirements. Furthermore, because these USTs are used primarily to fuel in-house vehicle fleets, and larger firms are probably more likely to maintain such fleets than smaller firms, smaller firms are not likely to be significantly represented among the class of firms using USTs for non-retail fuel storage. EPA has not yet been able to discover or develop definitive data which specifies how firms using USTs for non-retail motor fuel storage are distributed over size classes. Therefore, EPA invites comments on this issue.

There are additional reasons why EPA believes the non-retail fuel marketing classes will bear less significant economic impacts than the retail motor fuel marketing class. First, only a fraction of the firms in any given industry are identified as using USTs for non-retail motor fuel. In many cases, this fraction is less than five percent. Second, available data suggest that the average number of non-retail motor fuel USTs per establishment is less than 3. Third, USTs represent a smaller fraction of total capital stock for these industries than they do for the retail motor fuel marketing industry. Therefore, UST regulations are less likely to significantly affect return on assets.

Although facilities in this class can largely avoid the possibility of significant regulatory burden by ceasing to use USTs and switching to retail purchase of fuel, there is one burden that cannot be avoided by such a switch. Existing leaks will require corrective action as part of tank closure. However, to the extent that businesses owning such facilities are typically larger than the smallest retail motor fuel outlet owner, this impact is likely to be less severe.

Economic impacts on facilities using USTs to store regulated hazardous substances are also expected to be less significant than economic impacts on motor fuel retailing facilities, for reasons similar to those for non-retail fuels. First, for the ten chemical UST-intensive industries mentioned previously, the percentage of facilities in the industry owning chemical USTs ranges from 1 percent to 40 percent. This suggests the existence of substitutes for chemical USTs. Such substitutes include aboveground tanks, drums (especially for small businesses), and process changes. As one example of substitution, a switch from oil-based paint to water-based paint eliminates the need for solvents, which are the chemicals generally stored in USTs at paint-producing facilities. As another example, chemical USTs at petroleum bulk stations might store additives for gasoline. These additives could be blended in at an earlier point in the

distribution chain. The existence of such alternatives tends to mitigate the potential economic effects of regulations for chemical USTs. In addition, firms owning USTs storing regulated substances will typically be larger than the smallest firms in the retail motor fuel marketing class. However, corrective action responsibilities for existing tanks cannot be avoided by switching to substitutes, so corrective action requirements pose some potential for economic dislocation.

B. Regulatory Flexibility Act

Under the Regulatory Flexibility Act of 1980 (5 U.S.C. 601–612), agencies publishing a proposed or final rule must prepare and make available for comment a Regulatory Flexibility Analysis that describes the potential impact of the rule on small entities (i.e., small business, small organizations, and small governmental jurisdictions). The purpose of the Regulatory Flexibility Act is to ensure that regulations do not impose unnecessary costs or other burdens on such entities. No Regulatory Flexibility Analysis is required if the Agency's Administrator certifies that the rule will not have a significant impact on a substantial number of small entities.

The Agency has examined the potential impact on small entities of the rule being proposed today and has concluded that this regulation will have a significant impact on a substantial number of small entities. The Agency has therefore prepared a Preliminary Regulatory Flexibility Analysis, which is summarized below.

Small Entities Potentially Affected by This Regulation. For this Preliminary Regulatory Flexibility Analysis, the Agency divided the businesses potentially affected by the regulation into two categories: firms engaged in retail motor fuel marketing (e.g., gasoline service stations), and firms owning other USTs. An initial review of these two categories of businesses showed that firms engaged in retail motor fuel marketing included a substantial number of small businesses, including many with fewer than 10 employees and less than $100,000 in net worth. The category of other USTs breaks down into two sub-categories: non-retail petroleum USTs and hazardous substances USTs. A preliminary analysis of the category of businesses owning non-retail petroleum-containing USTs (i.e., those used to store petroleum products that are not retailed as motor fuel), revealed that such USTs are used for a variety of purposes by a large and diverse group of businesses. The most common uses of non-retail petroleum-containing USTs are to store motor fuel at facilities where fleets of vehicles or off-the-road vehicles are located. For example, the owner of a fleet of busses or a farmer with many gasoline-powered off-the-road vehicles would be likely to have an UST at his or her facility. Owners and operators of non-retail petroleum USTs are found in all sectors of American business, including farming, timber operations, mining, manufacturing, transportation, and wholesale and retail trade; and these owners and operators own and operate firms of all sizes. Similarly, owners and operators of USTs containing hazardous substances are also widely distributed throughout the economy.

Because firms owning non-retail petroleum and hazardous substance USTs fall into hundreds of Standard Industrial Classifications (SICs) and range in size and type from one-person nonprofit organizations to small governmental jurisdictions to major corporations, and because no data are currently available to identify these firms and entities, EPA is placing the primary emphasis of this Regulatory Flexibility Analysis on the retail motor fuel marketing sector. The Agency solicits comments both on the extent of small business ownership of USTs outside the retail motor fuel marketing sector and the industries in which UST-owning small businesses are located.

The Agency believes that, by focusing on the retail motor fuel marketing sector, the Regulatory Flexibility Analysis will identify those impacts of the proposed rule with the greatest potential of significantly affecting a substantial number of small entities. Several characteristics of the retail motor fuel marketing sector support the Agency's decision to emphasize this sector in its Regulatory Flexibility Analysis. First, all of the businesses in this sector must store their product in underground storage tanks; they cannot choose either not to store product or not to store it below ground. Second, this sector of the economy is overwhelmingly dominated by small businesses; it is estimated that more than 3-quarters of all retail motor fuel outlets are owned or operated by small businesses. Finally, data on which to base the analysis are available for this sector in sufficient quantity and quality to ensure that the Regulatory Flexibility Analysis will be reasonably accurate and will capture the most severe small-business impacts likely to occur as a result of the issuance of this proposed rule.

EPA has used a variety of data sources to develop estimates of the number of small businesses engaged in retail motor fuel marketing and to describe the economic and financial characteristics of this sector and these firms. The American Petroleum Institute, the National Association of Convenience Stores, the Petroleum Marketers Association of America, the Society of Independent Gasoline Marketers of America, and the Service Station Dealers of America have assisted EPA by providing data and by suggesting possible data sources. EPA also used data on the small businesses in this sector compiled by the Small Business Administration and the Department of Energy and data made available in many private-sector publications (particularly *The Lundberg Letter* and *National Petroleum News*).

For this Regulatory Flexibility Analysis, small businesses in the retail motor fuel marketing segment are defined as firms with less than $4.6 million in annual sales. This is the definition used by the Small Business Administration (SBA) to identify small businesses in this sector, and this annual sales figure has also been shown in EPA's preliminary analysis to reflect an appropriate size cutoff for small firms in this sector. This definition includes all firms in the retail motor fuel marketing sector with two or fewer outlets. Firms with $4.6 million in sales will typically have approximately $500,000 in assets and $250,000 in net worth. The SBA sales-based definition of small business includes those firms most vulnerable to significant economic impacts, and those firms least likely to have insurance to cover their corrective action expenditures. This definition also includes all firms with a net worth less than the costs of replacing 3 tanks or the cost of performing a corrective action that involves ground-water cleanup.

There are two major classes of firms in the small-business segment of this sector: those that own and operate their own outlets and those that operate outlets that they lease. Firms in this latter class are termed "lessee" or "independent" dealers. In the group of firms in this sector owning their own outlets are many "open" dealers, defined as firms owning and operating a single retail motor fuel outlet.

EPA estimates that in 1984, small businesses either owned or operated 75 percent of the 193,000 retail motor fuel outlets in the United States. Of this number, open dealers were estimated to own approximately 80,000 or 42 percent of all retail motor fuel outlets. Open dealer firms vary widely in size and age; some open dealers have new outlets, over $500,000 in assets, and $400,000 in

net worth, while others have older outlets with 30-year-old tanks, only $42,000 in assets and $30,000 in net worth. EPA estimates that the typical open dealer (the statistical median) has $90,000 in net worth, $210,000 in assets, and $14,000 in annual after-tax profits. Such a typical open dealer firm is thus a business earning a reasonable profit and having a reasonable expectation of continuing in business.

In addition to open dealers, small business owners in the retail motor fuel marketing sector include owners of small chains of retail outlets. It is common for owners of small chains to own 2 or 3 retail outlets and also to act as wholesale suppliers for several open dealers. (This business pattern is particularly common in rural areas.) It is also common for firms in this sector to own a chain of several convenience stores (C-stores), some of which do not supply gasoline. For such small C-stores chains, gasoline sales are not generally the primary line of business. EPA estimates that there were 3,700 such chains owning 8,200 retail motor fuel outlets in 1984.

The Agency estimates that 58,000 retail motor fuel outlets are operated by lessee dealers, whose outlets thus represent 30 percent of all retail motor fuel outlets. The majority of these lessee dealer-operated outlets are owned by large, vertically integrated petroleum firms that engage in production, refining, and marketing, but many are owned by independent marketers who own chains consisting of between 2 and 100 retail motor fuel outlets. The outlets operated by lessee dealers range in characteristics from some of the most modern and efficient outlets in the country to some of the most financially marginal operations in the retail motor fuel marketing sector. EPA estimates that the typical (statistical median) single-station lessee dealer is a firm with $2,000 in assets, $2,000 in net worth, and $6,000 a year in after-tax profits; the typical lessee dealer is thus a very small firm, but one which nevertheless has reasonable profits for the size of the business and a reasonable expectation of continuing in business.

Open dealers, who both own and operate an outlet, will have to meet all of the costs of UST regulations. However, the situation is more complex for lessee dealers because, although the terms and conditions of leases vary widely, the most common arrangement makes the lessee dealer responsible for "sounding the alarm," i.e., for operating whatever leak detection and inventory control systems have been agreed to by both the owner and the lessee, but not for maintaining or replacing tanks or paying for corrective action. However, EPA is aware that some lessors are attempting to alter these arrangements to increase the responsibilities of lessees by, for example, holding the lessee responsible for releases or requiring the lessee to buy the tanks. In the Preliminary Regulatory Flexibility Analysis, EPA has assumed that the terms of traditional lease arrangements will prevail, and the analysis therefore does not assess the impacts of changes in lease terms on lessee dealers. However, the analysis does consider cases in which severe economic impacts could cause the owner of a leased outlet to close the outlet and thus force the lessee dealer out of business.

Although the typical open dealer and lessee dealer are sound businesses, there are marginal firms in both categories. A marginal firm is defined as one that is making very low profits or that has an aging outlet and cannot afford to invest any substantial amount of money into this outlet. In time, outlets age and become more marginal, and, as a result, EPA estimates that existing outlets have tended to exit the industry at a rate of 2 to 4 percent per year. Because many of the outlets that close are replaced by new businesses that are small, this 2 to 4 percent exit rate does not necessarily mean that the small business share of the retail motor fuel marketing sector is significantly declining.

Economic Impacts of the Proposed UST Regulations on Small Business. EPA's Regulatory Flexibility Analysis has focused on the potential impact of the proposed regulation on currently existing retail motor fuel marketing outlets that are owned by small businesses. Today's proposed regulation will have very little impact on the costs of building new outlets or of entering the retail motor fuel marketing industry. The installation of coated and cathodically protected tanks or fiberglass reinforced plastic (FRP) tanks is standard at facilities that are being constructed today. Further, facilities that are being constructed today tend to have leak detection equipment installed at the time of construction. The costs of these measures add little to the total costs of constructing a new facility. Therefore, while the effect of this regulation may be to force existing outlets owned by small businesses to close, it may also have the effect of presenting an increased opportunity for entry by new outlets meeting today's regulatory standards, regardless of their size.

To examine the potential economic impacts of the proposed regulation on small businesses, EPA developed an economic impact model that could combine financial and economic data on firms in the industry with cost and probability-of-release data from the Regulatory Impact Analysis to estimate the rates at which existing firms in the retail motor fuel marketing sector leave the industry for reasons unrelated to UST regulations and as a result of business failures caused by these regulations. The economic impact model was used to develop these estimates assuming first that no revenue increase will occur and then that varying levels of revenue increase will occur. The economic impact analysis assumes that small firms will not be able to obtain insurance or to receive support from state UST funds designed to assist small firms to meet the costs of corrective action. Such state assistance might include loans, loan guarantees, insurance, or other programs designed to smooth the regulatory burden over time or over a larger affected population. The assumption that neither the insurance industry nor state funds will be available to assist small firms in meeting their corrective action costs reflects the situation confronted by most small firms today. EPA hopes to encourage both the insurance industry and the states to provide UST coverage for small firms in the future. If such coverage becomes available at a reasonable cost, the adverse impacts on small businesses predicted by the Regularly Flexibility Analysis could be significantly over-estimated.

The most important source of substantial impacts in today's proposed UST regulation is the cost of corrective action. EPA estimates that 89 percent of all small businesses owning retail motor fuel outlets would fail if they were forced to meet the full costs of corrective action for a release sufficiently serious to reach ground water. Fourteen percent of all small businesses owning retail motor fuel outlets would fail if they were forced to pay the average costs of corrective action for a release that does not reach ground water; in this second case, most of the firms that would fail would be considered marginal. If releases requiring a corrective action with average costs occur at the level estimated by the Regulatory Impact Analysis and no revenue increases are possible for small businesses, 10 percent of small firms will fail in each of the first five years as a result of these corrective action costs. A price increase of 5 percent on all goods and services

provided by retail motor fuel outlets would be necessary to enable retail motor fuel outlets owned by small firms to bear the costs of corrective action without failing in significant numbers. A price increase of this magnitude is unlikely, however, because a price increase of only 3 percent would enable these firms' larger competitors to bear the costs of all UST regulations with higher profits than these larger firms have today. With a 3 percent price increase, 3.7 percent of all small firms will fail as a result of corrective action costs in each of the first five years after promulgation. EPA also estimates that corrective action costs may be high enough and frequent enough to cause many independent marketers to close outlets that are operated by lessee dealers. It is possible that these closed outlets might be replaced by newer facilities, which might in turn be operated by lessee dealers.

EPA considered a variety of alternative approaches to the proposed corrective action requirements for USTs, including an exemption for small businesses in this sector. However, the Agency has determined that such an exemption would mean that EPA had failed to achieve the statutory goals set forth in Subtitle I. Because there is no difference in terms of the threat to human health and the environment posed by releases from USTs owned by small businesses and releases from those owned by large businesses, the Agency cannot justify exempting 76 percent of all retail motor fuel outlets in the United States from the corrective action requirements being proposed today, as would be necessary if small businesses were exempted. Instead, EPA has developed an approach to UST regulation that is designed to minimize corrective action costs by providing site-by-site flexibility in implementation.

EPA has attempted to provide the flexibility needed by small firms in this sector in the proposed requirements related to replacement and repair of leaking tanks and upgrading of existing tanks. Leaking tanks can be repaired rather than replaced whenever this is a feasible option. New tanks used to replace leaking tanks can be single-walled (although they must be coated and cathodically protected) rather than double-walled tanks, which are more expensive. Ten years are allowed for the upgrading of existing bare steel tanks, and the upgrade requirement can be met by retrofitting tanks with cathodic protection rather than by replacing the tanks. In combination, these requirements related to the replacement and upgrading of tanks will cause no more than 2 percent of small firms to exit the industry even in the absence of any revenue increases. The small firms forced to exit are marginal operations, and the exit caused by the regulation is simply a small acceleration of trends that are occurring in this industry. A regulation that required the replacement of all existing bare steel tanks with double-walled tanks within 3 years would cause the exit of 56 percent of all small businesses in this sector (assuming no revenue increase).

The regulations being proposed today include requirements for leak detection for USTs. EPA considers these requirements essential to the success of the UST program, and the costs of leak detection are not estimated to have significant economic impacts on small businesses. The costs of leak detection are relatively small, even compared to the profits of marginal small businesses. For example, tank tightness tests are assumed to cost $500 per test and need only be performed every 3 to 5 years. Further, according to industry sources, inventory control is already commonly practiced by many small firms. For example, most lessee dealers are required to conduct inventory control as a condition of their leases.

C. Paperwork Reduction Act

Pursuant to section 3504(h) of the Paperwork Reduction Act of 1980, the reporting and recordkeeping provisions of today's proposed rule have been submitted to OMB for approval. Comments on these requirements should be submitted to the Office of Information and Regulatory Affairs, OMB, 726 Jackson Place NW., Washington, DC 20503, marked: Attention—Desk Officer for EPA. Should EPA promulgate a final rule, the Agency will respond to comments by OMB or the public regarding the information collection provisions of the rule.

X. REVIEW OF SUPPORTING DOCUMENTS AND REQUEST FOR PUBLIC COMMENT

EPA invites public comments on all aspects of these proposed regulations, including all issues raised in the Preamble. In preparing this proposal, the Agency has used several sources of data. These sources have been placed in the rulemaking docket, which may be inspected by the public in LG-100, U.S. Environmental Protection Agency, 401 M Street, SW., Washington, DC, from 9:00 a.m. to 4:00 p.m., Monday through Friday, excluding holidays. Copies of several of these documents are also available for public inspection and review in the libraries of EPA's Regional Offices.

Comments are solicited in regard to this information, especially their relevance to today's proposed rulemaking. The Agency requests that these comments be submitted by June 15, 1987 to the RCRA Docket Clerk [Docket No. UST-2], Office of Underground Storage Tanks, WH-562, U.S. Environmental Protection Agency, 401 M Street, SW., Washington, DC 20460.

XI. SCHEDULE OF PUBLIC HEARINGS

The Agency will hold three public hearings on today's proposal. They are scheduled to convene at three different locations and at the dates indicated below:

1. May 28 (and 29, if necessary), 1987—The Westin Hotel, 2401 M Street, NW., Washington, DC 20037
2. June 1 (and 2, if necessary), 1987—The Registry Hotel, 15201 Dallas Parkway, Dallas, Texas 75248
3. June 4 (and 5, if necessary), 1987—Miyako Hotel, 1625 Post Street, San Francisco, California 94015

The hearings will begin at 9:30 a.m., with registration at 9:00 a.m. The hearings will end at 4:30 p.m., unless concluded earlier. Anyone wishing to make a statement at a hearing should notify, in writing, Ms. Helga Butler, Public Participation Officer, Office of Underground Storage Tanks [WH-565], U.S. Environmental Protection Agency, 401 M Street, SW., Washington, DC 20460.

Oral and written statements may be submitted at the public hearing. Persons who wish to make oral presentations must restrict them to 15 minutes and are encouraged to have written copies of their complete comments for inclusion in the official record.

List of Subjects in 40 CFR Part 280

Administration practice and procedures, Confidential business information, Hazardous materials, Reporting and recordkeeping requirements, Underground storage tanks, Water pollution control, Water supply.

Lee M. Thomas,

Administrator.

March 29, 1987.

For the reasons set out in the Preamble, Part 280 of Title 40 of the Code of Federal Regulations is proposed to be revised as follows:

federal register

Friday
September 23, 1988

Part II

Environmental Protection Agency

40 CFR Parts 280 and 281

Underground Storage Tanks; Technical Requirements and State Program Approval; Final Rules

ENVIRONMENTAL PROTECTION AGENCY

40 CFR Part 280

[FRL-63385-3]

Underground Storage Tanks; Technical Requirements

AGENCY: Environmental Protection Agency (EPA).

ACTION: Final rule.

SUMMARY: The Environmental Protection Agency (EPA) today finalizes regulations for underground storage tanks containing petroleum or substances defined as hazardous under the Comprehensive Environmental Response, Compensation, and Liability Act of 1980 (CERCLA), except any substance regulated as a hazardous waste under Subtitle C of the Resource Conservation and Recovery Act (RCRA). These regulations were first proposed on April 17, 1987 (52 FR 12662) and a subsequent Supplemental Notice was published on December 23, 1987 (52 FR 48638).

Under Section 9003 of RCRA, EPA must establish requirements for leak detection, leak prevention, financial responsibility, and corrective action for all underground storage tanks containing regulated substances as necessary to protect human health and the environment. Today's final rule sets forth requirements satisfying the mandates of section 9003, except that final requirements concerning financial responsibility will be addressed later by EPA in another Federal Register notice.

EFFECTIVE DATE: December 22, 1988, except § 280.22(g) which is effective October 24, 1988.

ADDRESS: The docket for this rulemaking (Docket No. UST 2-1) is located at the U.S. Environmental Protection Agency, 401 M Street SW., Washington, DC 20460. The docket is open from 9:30 a.m. to 3:30 p.m., Monday through Friday, except for federal holidays. You may make an appointment to review docket materials by calling (202) 475-9720. You may copy a maximum of 50 pages of material from any one regulatory docket at no cost. Additional copies cost $0.20 per page.

FOR FURTHER INFORMATION CONTACT: Call the RCRA/Superfund Hotline at (800) 424-9346 (toll free) or 382-3000 (in Washington, DC).

SUPPLEMENTARY INFORMATION: The contents of today's preamble are listed in the following outline:

I. Authority

II. Background

A. Subtitle I of RCRA
B. Operating Principles
C. Summary of April 17 Proposed Rule
D. Public Comment on the Proposal
E. Summary of the Supplemental Notice and the Notice of Availability of New Information
F. Influences on the Final Rule
1. Scope of the Problem
2. New Cause-of-Release Information
3. Industry Codes and Practices
4. Industry Trends
5. UST System Technology Development
6. Leaking USTs Present a Unique Regulatory Challenge
7. Emerging State and Local UST Programs and EPA's Approach to Regulation
G. Conclusions Since Proposal

III. Today's Final Rule

A. Summary of Today's Final Rule
B. Major Points of Departure from April 17 Proposal
1. More Frequent Tank Tightness Testing of Existing Unprotected Tanks During the 10-Year Upgrade Period
2. Less Frequent Monitoring of New and Upgraded Tanks Until Age 10
3. Gradual Phase-in of Release Detection Based on Age
4. More Stringent Requirements for Pressurized Piping
C. Alternative Approaches Considered
1. New UST Systems Containing Petroleum
2. Existing UST Systems Containing Petroleum
3. Hazardous Substance UST Systems
4. Corrective Action

IV. Analysis of Today's Rule

A. Program Scope
1. Applicability
2. Regulatory Exclusions
3. Deferral of Regulations
4. Definitions
B. UST Systems: Design, Construction, Installation, and Notification
1. Design and Construction Requirements (§ 280.20)
2. Installation (§§ 280.20 (d) and (e))
3. Upgrading of Existing Systems (§ 280.21)
4. Notification (§ 280.22)
C. General Operating Requirements
1. Spill and Overfill Prevention and Control (§§ 280.20 and 280.30)
2. Operation and Maintenance of Corrosion Protection (§ 280.31)
3. Inspection and Maintenance of the Tank System (§ 280.31)
4. Compatibility (§ 280.32)
5. Repairs (§ 280.33)
6. Reporting and Recordkeeping (§ 280.34)
D. Release Detection
1. Overview
2. Section-by-Section Analysis
E. Release Reporting, Investigation and Confirmation
1. Overview
2. Section-by-Section Analysis
F. Release Response and Corrective Action for UST Systems Containing Regulated Substances
1. Background
2. Major Issues Influencing the Final Rule
3. Section-by-Section Analysis
C. Out-of-Service UST Systems and Closures
1. Introduction
2. Temporary Closure (§ 280.70)
3. Permanent Closure (§ 280.71)
4. Assessing the Site at Closure (§ 280.72)
5. Applicability to Previously Closed UST Systems (§ 280.73)
6. Closure Records (§ 280.74)
H. Analysis of Other Significant Comments
1. Reliance on Codes Developed by Nationally Recognized Organizations
2. Additional Decisionmaking Authority for Implementing Agencies

V. Relationship to Other Aspects of the UST System Program

A. Interim Prohibition
B. Notification
C. Leaking Underground Storage Tank Trust Fund
D. Exempted Tank Studies

VI. Relationship to Other Agency Programs

A. CERCLA
B. Hazardous Waste Tank Program
C. Hazardous Waste Management Regulations
1. Hazardous Substances
2. Petroleum and Petroleum-based Substances
D. Used Oil Regulations
E. SPCC
F. DOE High Level Radioactive Waste Program

VII. Economic and Regulatory Impacts

A. Regulatory Impact Analysis
1. Executive Order 12291
2. Costs
3. Benefits
4. Cost Effectiveness of the Final Rule
5. Economic Impacts on Existing Facilities
6. Integration of Technical Standards and Financial Responsibility Rules
B. Regulatory Flexibility Act
1. Small Entities Potentially Affected by the Rule
C. Paperwork Reduction Act

VIII. List of Subjects in 40 CFR Part 280

I. Authority

These regulations are issued under the authority of sections 2002, 9001, 9002, 9003, 9004, 9005, and 9006, 9007, and 9009 of the Solid Waste Disposal Act of 1970, as amended by the Resource Conservation and Recovery Act of 1976, as amended (42 U.S.C. 6912, 6991, 6991(a), 6991(b), 6991(c), 6991(d), 6991(e), 6991(f), and 6991(h)).

II. Background

A. Subtitle I of RCRA

The Hazardous and Solid Waste Amendments of 1984 extended and strengthened the provisions of the Solid Waste Disposal Act as amended by the Resource Conservation and Recovery Act (RCRA) of 1976. One major portion of RCRA as amended, Subtitle I, provides for the development and

implementation of a comprehensive regulatory program for "underground storage tanks" containing "regulated substances" and releases of these substances to the environment.

Subtitle I defines "underground storage tank" as a tank system, including its piping, that has at least 10 percent of its volume underground. Throughout this preamble and final rule, the terms "underground storage tanks," "USTs," and "UST systems" include both the underground storage tank vessel and the underground piping connected to it.

"Regulated substances" are defined as substances defined as hazardous under the Comprehensive Environmental Response, Compensation, and Liability Act of 1980 (CERCLA), except hazardous wastes regulated under Subtitle C of RCRA, and petroleum.

Subtitle I excludes the following from the definition of USTs:

- Farm or residential tanks of 1,100 gallons or less capacity storing motor fuel for noncommercial purposes;
- Tanks storing heating oil for consumptive use on the premises where stored;
- Septic tanks;
- Pipeline facilities (including gathering lines) regulated under the Natural Gas Pipeline Safety Act of 1968, the Hazardous Liquid Pipeline Act of 1979, or State laws comparable to these Acts;
- Surface impoundments, pits, ponds, and lagoons;
- Storm-water or wastewater collection systems;
- Flow-through process tanks;
- Liquid traps or associated gathering lines directly related to oil or gas production and gathering operations; and
- Storage tanks situated on or above the floor of underground areas, such as basements and cellars.

Subtitle I contains several major provisions for the regulation of UST systems. Section 9002 requires UST system owners to notify states of the existence of their UST systems. These notification requirements were addressed in a final rule published by EPA on November 8, 1985 (50 FR 46602). Section 9002, as amended by the Superfund Amendments and Reauthorization Act of 1986 (SARA), also requires that states use the notifications they receive to compile tank inventories. Under Federal grant agreements, states are providing EPA with aggregated data from these notifications.

Under section 9003, EPA must promulgate regulations applicable to all owners and operators of UST systems as necessary to protect human health and the environment. In promulgating these regulations, section 9003(b) authorizes the Administrator to distinguish between types, classes, and ages of underground storage tanks. Section 9003 requires EPA to issue design, construction, installation, and compatibility standards for new tanks, as well as requirements applicable to all tank owners and operators concerning leak detection, recordkeeping, reporting, closure, corrective action, and financial responsibility.

Section 9003(h), as amended by SARA, gives EPA—and states under cooperative agreements with EPA—authority to clean up petroleum releases from UST systems or to require their owners and operators to do so. It also establishes a trust fund to finance these activities.

Section 9004 permits EPA to authorize states to implement their own UST programs in place of the Federal requirements if the state's requirements are "no less stringent" than EPA's and provide for adequate enforcement. Programs which are less stringent in certain areas may receive approval for an interim period.

Other provisions of Subtitle I pertain to definitions (section 9001); entry, inspection, and information gathering (section 9005); enforcement (section 9006); Federal facilities (section 9007); state authorities (section 9008); and studies and reports to Congress required of EPA (section 9009).

This preamble and final rule pertain to the requirements mandated by sections 9003 (a), (c), (e) and (g); they also meet the study requirements of sections 9009 (a) and (b). Final rules for state program approval requirements, under section 9004, are found elsewhere in today's **Federal Register**. Final rules for financial responsibility requirements for petroleum UST systems, under sections 9003 (a) and (d), will be promulgated by EPA at a later date.

Section 9003(c) requires EPA to establish the following minimum technical requirements for all UST systems: To maintain a leak detection system or comparable system designed to identify releases to protect human health and the environment; to maintain records of any such release detection system; to report releases and corrective action taken; to take corrective action in response to a release; and to close tanks to prevent future releases. Under section 9003(e), EPA must also establish performance standards for new UST systems. At a minimum, these standards must include design, construction, installation, release detection, and compatibility standards.

Until the promulgation of today's final rule, section 9003(g) established an "Interim Prohibition" that allowed installation of UST systems after May 8, 1985, only if the UST system is protected from corrosion, prevents releases due to corrosion or structural failure for the operational life of the tank, and is constructed of material compatible with the substance to be stored. The law allowed an exemption from the requirement of corrosion protection if an UST system is located at a site having a soil resistivity measured at 12,000 ohms/cm or greater. An interpretive rule concerning the Interim Prohibition was published on June 4, 1986 (51 FR 20418). These Interim Prohibition requirements are replaced by today's final rule for new tank standards, except in those few cases where the Agency has decided to defer regulatory action on some types of UST systems. For these deferred UST systems, the Interim Prohibition will continue to apply until EPA takes action in the future either to regulate or not regulate them (see §§ 280.10 and 280.11 of the final rule).

B. Operating Principles

Faced with the mandate of Subtitle I, EPA recognized several unusual aspects of the regulated universe that have created special problems in developing an effective regulatory approach. First, the regulated universe is immense, including over 2 million UST systems estimated to be located at over 700,000 facilities nationwide. Second, over 75 percent of the existing systems are made of unprotected steel, a type of tank system proven to be the most likely to leak and thus create the greatest potential for health and environmental damage. Third, most of the facilities to be regulated are owned and operated by very small businesses, essentially "Mom and Pop" enterprises not accustomed to dealing with complex regulatory requirements. Fourth, numerous technological innovations and changes are now underway in various sectors of the UST system service community.

In response to the unique aspects of this regulated community, and the clear need for comprehensive management of USTs during their operating life, EPA has identified and followed several key operating principles, described briefly below, in developing the final regulations for USTs.

- The UST program must be based on sound national standards that protect human health and the environment.
- The UST regulatory program must be designed to be implemented at the

state and local levels. State and local governments have been and continue to be the authorities most capable of effective oversight of UST systems and response to releases.

- The regulations must be kept simple, understandable, and easily implemented by the owner and operator in order to facilitate voluntary compliance. Section 9003(b) specifically indicates that technical capability can be considered in developing the Subtitle I rules.
- The regulations must not inhibit new UST technological developments.
- The regulations must be designed to retain the flexibility necessary to accommodate, where possible, the special needs of the UST regulated community, which is largely composed of small businesses with limited resources available for capital improvements.
- In order to encourage the utmost voluntary compliance, the regulations should build upon current industry trends and tie into and utilize ongoing industry initiatives toward more sound UST management. Toward this end, section 9003(b) specifically authorizes EPA to consider industry practices and consensus codes in developing appropriate UST regulations. The Agency expects the nationwide use of these new management practices to yield direct environmental benefits.

By reflecting these operating principles in the final UST regulations, the Agency believes it has taken the most effective approach toward protecting human health and the environment.

C. Summary of April 17 Proposed Rule

On April 17, 1987, EPA proposed regulations for USTs storing either petroleum or hazardous substances (other than hazardous wastes regulated under Subtitle C of RCRA) (52 FR 12662). These proposed regulatory measures set requirements for both new and existing UST systems to control the major causes of releases from these tank systems and included, among other things, corrosion controls, proper installation requirements, and spill and overfill prevention measures.

Figure 1 illustrates several key aspects of the regulatory program proposed in April 1987; requirements for corrosion protection and monthly release detection at all new UST systems; the phase-in of either monthly release detection or periodic tightness testing combined with inventory control at all existing USTs, within 3 years if unprotected from corrosion and within 5 years if protected; and the upgrading of all existing UST systems to the new tank standards within 10 years. In addition, the proposed new and upgraded tank standards for hazardous substance USTs required secondary containment with interstitial monitoring.

BILLING CODE 6560-50-M

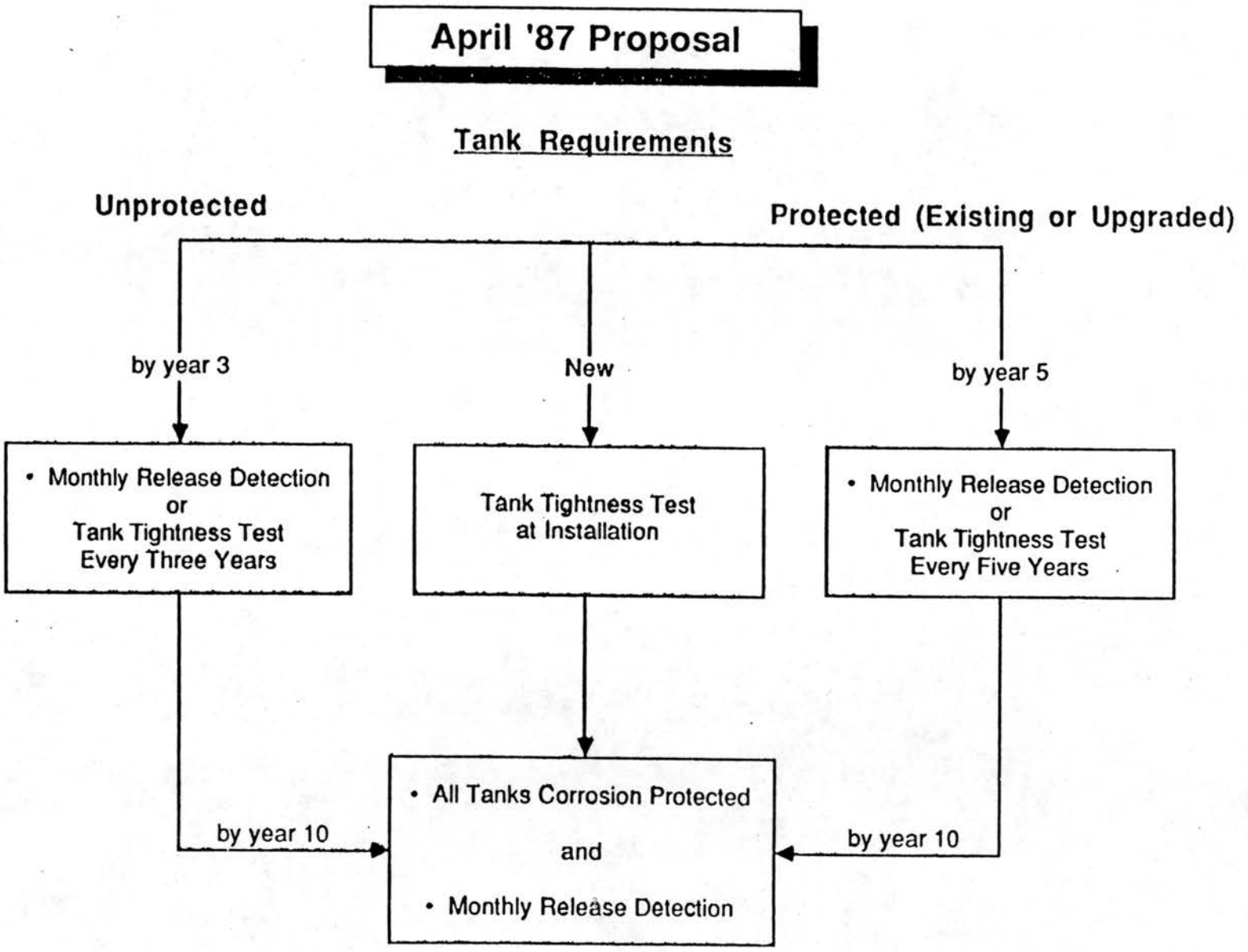

Figure 1

BILLING CODE 6560-50-C

Figure 1 does not illustrate several other requirements and standards proposed for both new and existing UST systems: The design and installation of new UST systems; spill and overfill prevention; UST system repair; system closure; release detection methods and performance; and release confirmation, reporting, and response (including corrective action requirements). These proposed requirements and the manner in which they may have changed in the final rule are described in detail later in today's preamble. Several major points of departure from the proposal are identified and discussed in section III below.

D. Public Comment on the Proposal

EPA received over 5,000 individual comments from over 1,100 commenters on the April 17 proposal, including verbal and written comments from the three public hearings. In general, these public comments supported the Agency's overall approach to the proposed regulations and the substantive requirements for new and existing UST systems.

Many comments addressed specific parts of the proposed rule, suggesting changes or calling attention to potential problems. These specific comments are discussed below in today's preamble. In summary, many comments tended to center on three areas: Concern for the impact the UST rule would have on small businesses, calls for EPA to adopt more stringent requirements for certain sensitive areas, and suggestions on the best way to phase in release detection. (See the corresponding sections in today's preamble for a full discussion of these comments.) The financial responsibility requirements generated more public comment than any other single area. Comments on this issue will be addressed in the financial responsibility final rule that will appear in a later **Federal Register**.

E. Summary of the Supplemental Notice and the Notice of Availability of New Information

After the April 17 proposal appeared, EPA realized that some aspects of the technical standards needed to be clarified and that more public comment on these matters was needed. Consequently, EPA published a Supplemental Notice on December 23, 1987 (52 FR 48638). This Supplemental Notice dealt with four areas pertaining to the proposed technical requirements:

(1) Use of "static inventory control" to monitor used oil UST systems;

(2) A listing of substances subject to petroleum UST standards;

(3) Alternatives to release monitoring for piping and tanks protected from external corrosion; and

(4) An alternative definition of "flow-through process tank."

Public response concerning these issues is discussed in later sections of this preamble.

On March 31, 1988, EPA published a Notice of Availability of additional information for public comment. It announced the availability of information pertaining to several technical areas of the proposed rule including general operating requirements, release detection and tank closure. This new information was submitted by commenters, gathered in meetings or conferences and produced by Agency research programs. Few public comments were provided concerning these documents.

F. Influences on the Final Rule

In the preamble to the April 17 proposal, the Agency discussed the scope and nature of the problem posed by UST systems and several important influences on the development of the proposal (52 FR 12665–12671). Today's final rule builds on that earlier information and has benefited from numerous comments provided by the public on the issues highlighted in the proposal. The following section briefly discusses several areas that have received further consideration from EPA in the development of today's final rules.

1. Scope of the Problem

The preamble to the proposed rule (52 FR 12665) presented estimates of the number of leaking UST systems based on EPA studies, local government experiences, and industry estimates. Among the statistics cited were the percentage of systems failing tightness testing, the percentage of systems actually leaking, the correlation of tank age to failure, and the extent and impact of soil and ground-water contamination from USTs. After the proposed rule was issued, EPA completed an additional study of the causes of release from UST systems. This new study was placed into the public docket and announced as available for comment in the December 23, 1987, Supplemental Notice. This study, "Causes of Release from UST Systems," and the public comments on it were important in developing today's preamble and final rule.

a. *Current Estimates of "Non-Tight" UST Systems.* In the preamble to the proposal (52 FR 12665), EPA cited evidence that numerous UST systems are non-tight and may be leaking. This evidence was based largely on three studies: EPA's "Underground Motor Fuel Tanks: A National Survey" reported tank tightness testing results and found that 35 percent of over 450 tank systems surveyed nationwide failed tightness testing; Suffolk County's UST program data revealed that 26 percent of over 6,000 tank systems tested in this New York county failed; and a Chevron-sponsored testing program found that nearly 10 percent of over 3,000 of their UST systems failed.

Commenters responding to the proposal who had experience with tightness testing provided various claims that between 11 and 48 percent of existing UST systems failed under test conditions. In an EPA-sponsored meeting, a group of experienced, independent installation contractors expressed their expert judgment that increased awareness of the UST problem, use of better tanks, and use of better installation and maintenance procedures have decreased the probability of present-day systems testing non-tight to about 20 percent, in contrast to the 50 percent of UST installations they believed would have tested non-tight several years ago.

After publication of the proposal, EPA studied several additional pieces of information concerning causes of release from UST systems. For example, EPA further reviewed the records of over 10,000 tightness test results from local UST programs (in Suffolk County, New York; Austin, Texas; and San Diego, California). EPA also analyzed an extensive and detailed historical set of records from a Texas tank testing company (the Service Station Testing Company of San Antonio, Texas). The EPA-sponsored report, "Causes of Release from UST Systems," is based on all these data and concludes that approximately 25 percent of existing UST systems are found to be non-tight when tested using current methods and that loose tank fittings or faulty piping causes 84 percent of these tightness test failures. Figure 2 summarizes the Agency's findings concerning the causes-of-release profile as derived from tank testing results and documented follow-up at over 10,000 UST systems conducted nationwide.

BILLING CODE 6560-50-M

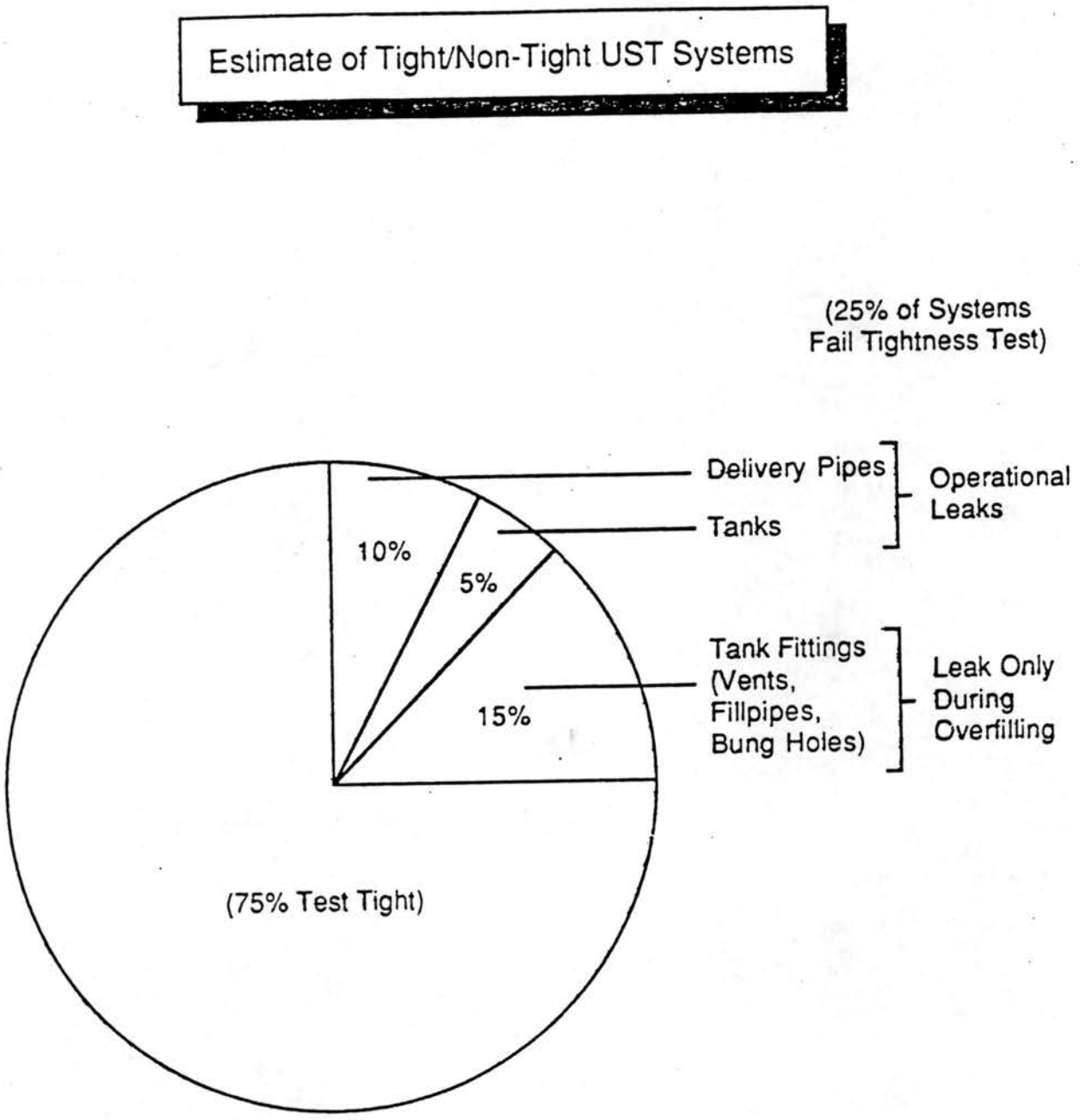

Figure 2

BILLING CODE 6560-50-C

b. *Estimated UST Systems with Releases.* Current indications concerning the number of UST systems nationwide that have had releases in the past or are now leaking are less precise than the tank tightness data, but the Agency believes the information that is available is significant nonetheless. As discussed in the preamble to the proposed rule, in many places in the nation that are still without state or local UST regulatory programs today, release detection only takes place when someone sees or smells the release (52 FR 12665). These historical data suggest that only about 10 percent of release incidents in these areas are discovered by inventory controls or mechanical release detection methods. Although the large number of incidents that are known to threaten or have contaminated ground-water wells is significant, it is not an accurate prediction of leaking UST systems because most UST systems are not located near wells.

As the result of aggressive UST monitoring programs in two states, over 5,000 UST sites in California and 3,000 sites in Florida have been identified as having had releases during the past three years. These recent discoveries already exceed 10 percent of the number of UST sites in each of these states, and the number of releases identified in just these two states may soon exceed the cumulative total of releases reported to all the states up until 1985 (see 52 FR 12665). At a more local level, UST system programs in Dade County, Florida, and San Jose, California, have also identified (through required release detection and system closure procedures) that well over 10 percent of their UST facilities have had some noticeable or significant releases into the surrounding soil and groundwater. Thus, the initial findings by state and local UST regulatory programs that are particularly aggressive appear to corroborate an industry-sponsored study (than previously cited Chevron investigation) that found approximately 10 percent of their 1,000 UST facilities located throughout the South and Southwest of the United States have had an adverse impact on nearby ground water in the form of released product floating on top of the ground-water table (see 52 FR 12666).

Public comments received in response to the proposal concerning this subject are not conclusive. Some industry sources provided very low estimates, claiming that from 0 to 3 percent of UST systems have had releases. Others claimed the actual number of leaking tank systems could be as high as 50 percent in some areas. Many estimated that the actual range is somewhere between 8 to 20 percent of UST sites, and the average of all estimates reported by commenters falls into this range. As shown in the previous figure (Figure 2), approximately 25 percent of all systems are now testing as non-tight. About 15 percent of the sites whose systems were tested actually proved to have a leak under normal operating conditions (tank and delivery piping leaks), and this proportion falls within the above-estimated range provided by the commenters.

Some commenters attempted to provide additional insight into the relationship between tank age and failure by indicating that tanks begin to fail tightness tests (and leak) at a much greater frequency after 12 years. In addition, the recent EPA causes-of-release study includes one study that indicated 10 to 13 percent of the tanks that are 12 to 13 years old were non-tight. This is more than double the proportion of non-tight tanks tested in other age groups. In another study, of the tanks actually found to be leaking, 42 percent of the leakers were 15 to 20 years old, and 30 percent of the leakers were 10 to 15 years old. All of the tanks that were leaking were made of bare steel. This demonstrates that the critical age in a typical unprotected steel tank's life is the period between 10 to 20 years of age when breakthrough from corrosion is most likely to begin.

Some commenters disputed the severity of the threat posed to the nation by leaking UST systems, which was discussed in the preamble to the proposed rule. For example, one suggestion was that the data presented in the preamble indicate less than 0.008 percent of the total area of the United States is affected by contamination due to leaking UST systems. In general, EPA finds this line of reasoning unpersuasive. In particular, this argument ignores, (1) that population density in the nation is not uniform (with most areas being sparsely populated or unpopulated); (2) that tank systems are generally located near populated areas to provide the fuel for these centers of human activity and; (3) that there are numerous documented cases of drinking water wells that have been threatened or already destroyed by leaking UST systems nationwide. The dispersal of leaked contaminants within ground-water aquifers can also affect an area many times larger than the soil-contaminated area. Further information gathered over the coming years of UST program implementation will ascertain the full magnitude of the impacts that leaking UST systems pose in terms of contamination to the nation's environment, but EPA concludes that the evidence collected to date, including the information provided by commenters on the proposal, clearly supports the need for today's final rules.

2. New Cause-of-Release Information

EPA's new information concerning releases from UST systems comes primarily from public comment and an EPA-sponsored study ("Causes of Release from UST Systems") that was made available for public comment in the December 23, 1987, Supplemental Notice. Review of this information has resulted in the following findings concerning the major causes of releases today:

- Most releases do not come from the tank portion of UST systems, because piping releases occur twice as often as tank releases;
- Spills and overfills are the most common causes of releases;
- Various nonoperational UST components at the top of USTs are loose and leak in the event of overfills;
- Although the older bare steel tanks fail primarily by corrosion, the "new generation" USTs (i.e., coated and cathodically protected steel, fiberglass-clad steel, and fiberglass tanks) have nearly eliminated failure induced by external corrosion;
- Corrosion, poor installation techniques and workmanship, accidents and natural events (e.g., frost heaves) are the four major causes of failure for piping; and
- When piping fails, pressurized systems pose a significant added threat of sudden, large releases.

Thus, the major causes of releases from UST systems are due to failures of unprotected tanks, leaks in delivery piping, leaks from vent pipes and fittings on top of the tank, and spill and overfill errors. Comments received on the original proposal (52 FR 12665–12668) and the Supplemental Notice concerning causes of release generally tend to corroborate the above findings. The following information summarizes some of the most relevant findings that are important in guiding today's standard-setting.

a. *Tanks.* Most existing tanks are made of bare steel. Numerous tank failure histories indicate that when bare steel tanks fail they almost always do so because of external corrosion. Of all of the current causes of release, corrosion of bare steel (tanks and pipes) is by far the most important.

Tank manufacturers have responded to this problem with a "new generation"

of tanks. Innovative tanks began to appear about 20 years ago in the United States in three basic forms: Fiberglass-reinforced plastic (FRP); steel with a corrosion-resistant coating and cathodic protection; and steel-FRP composite. A dramatic acceleration in the use of new generation tanks occurred with the introduction of the federal law's "Interim Prohibition" three years ago. These protected tanks now are estimated to account for about 20 to 25 percent of existing USTs. Although "new" in terms of protective designs, some of each of the new types of tank systems have been in the ground for over 20 years. Reported failures observed in the field due to corrosion (or other reasons) are very rare.

Failures (leaks) at all existing FRP tanks appear to have occurred at less than a rate of 0.05 percent per year of the total FRP tanks installed nationwide. Many commenters and other sources support the field estimates collected by EPA that less than 0.5 percent of the total number of existing FRP tanks have ever leaked. Although some installation-related failures have occurred in the past, heightened installer awareness of proper practices and techniques appropriate to FRP technology, manufacturer-sponsored contractor education programs, and production quality assurance appear to be responsible for a consistently decreasing failure rate of FRP tanks. The most important reported failure mode for these tanks is improper installation practices.

One new tank type, the STI–P3, is a favorite of corrosion engineers. These steel tanks have an external noncorrodible coating and a factory-applied metal anode that sacrifices itself to protect any bare spots on the tank, and the tank vessel is electrically isolated from any attached piping. Very few failures have ever been reported, and those failures are due to installation damage or improper maintenance, not design. In Ontario, Canada, where STI–P3 tanks have been widely used, the number of tank releases due to corrosion is reported to be declining as old tanks are replaced with STI–P3 tanks.

The steel-FRP composite tanks have not been used as widely as either the FRP or coated and cathodically protected tanks described above. Approximately 65,000 have been installed in this country. No corrosion-related failures have been reported. Many commenters suggested that this type of tank has several advantages over both FRP and coated and cathodically protected steel tanks, such as durability, no need for maintenance, and an added barrier between the tank and the environment should the steel tank be breached by internal corrosion.

As the threat of external corrosion is reduced by new tank designs, internal corrosion may eventually become the primary cause of failure for steel tanks. Internal corrosion, however, occurs far less frequently and takes longer to manifest itself than external corrosion. Many commenters have reported problems with internal corrosion under the drop tube (i.e., fill pipe located within the tank) of steel tanks. Data submitted from the tank lining industry confirm these reports. The tank manufacturing industry, however, began to respond to this problem several years ago by including "striker plates" under all openings of their new tanks.

Lining tank interiors is another way to prevent releases due to internal and external corrosion. Tank interior lining has been employed by major corporations and small businesses both as a short-term solution for potentially leaking tanks and as a preventive measure for temporarily giving structurally sound, non-leaking existing tanks the same protection from corrosion-induced releases that "new generation" tanks have. Data indicate this to be a successful procedure for extending an existing tank's operational life. Even when employed in the absence of external cathodic protection, failure rates are reported to be very low, apparently because current industry consensus codes only recommend the use of lining when the tank shell is assessed to be able to withstand the expected rate of corrosion at the site (determined by assessing the tank's existing condition).

b. *Piping.* Most commenters rated delivery piping the most significant source of releases and reported releases occurring twice as frequently from piping as from bare steel tank releases. Two types of piping systems are commonly used: Suction piping, which is used in low-volume applications where only a few dispensers are needed; and pressurized piping, which is used in high-volume applications where many dispensers are fed from one tank. Each piping system has unique advantages and disadvantages, discussed below.

Suction piping is considered by commenters to be safer than pressurized piping because it operates at less than atmospheric pressure. If the pipe develops a leak, air or ground water is usually drawn into the pipe instead of product leaking out. Commenters suggested, however, that suction piping systems do not operate efficiently in a number of settings, such as at high altitudes, in hot climates, or in high volume delivery situations.

Pressurized piping systems reportedly are used at about 95 percent of new retail motor fuel system installations. If the delivery line is breached, free product is released until the pressure in the pipe equals the pressure outside the pipe. Without add-on instrumentation or devices, large volumes of product can be pushed out of breaches in the piping when product is delivered to the pump. Pressurized piping simply pushes more volume to meet this increase in demand, releasing large amounts of product quickly into the environment.

Comments received by EPA indicate that the releases from pressurized piping systems can be catastrophic in the absence of monitoring and automated pump flow restriction devices. Incidents involving releases of thousands of gallons have been reported to EPA by experienced installers. It is estimated that at least 70 percent of the volume of product lost through pressurized pipe releases could be avoided by retrofitting each line with a simple, inexpensive, continuous in-line pressure monitor that automatically restricts product flow in the presence of a significant line leak.

Both suction and pressurized piping are often damaged by external corrosion. Cathodic protection of steel piping would significantly reduce corrosion failures. Presently, most steel piping is protected by galvanizing and coating, or coating and wrapping. The threaded portions at joints are the most common failure points because the protection is removed from them while threading and is never replaced. In these cases, cathodic protection would reduce joint failures. Other joint failures result from untightened joints, cross-threaded joints, or improperly made joints. Improving the installer's education and skills in the complex task of pipe installation would reduce these piping failures.

Also, installers and others have estimated that piping is damaged 10 percent of the time at new installations between the installation of equipment and completion of paving. They strongly recommend that a test of new equipment before start-up is essential as a sound practice, particularly with pressurized piping.

Natural forces and accidents also cause piping failures. The piping is near the surface of the ground and, thus, subject to frost heaves and overloading. In addition, the starting and stopping of product delivery causes the piping to move and shift. This eventually causes joint failure in many piping systems.

"New generation" piping systems comparable to the "new generation" of tanks are under development but not widely used.

c. *Nonoperational Components.* Nonoperational components consist of tank bung holes, tank manholes, vent and fill lines, vapor recovery lines, and manifold piping (the piping used in connecting tanks together). These components, all located above the top of the tank, are called nonoperational because releases from these sources do not occur under normal operating conditions. Releases from them are usually unseen because they are underground. These releases are episodic and usually of small volume, because they only occur when the tank is overfilled or when manifolded tanks are filled through the piping connecting the tanks together. Generally, when an overfill occurs, the volume of product contained in the fill tube above the loose nonoperational component will be forced out into the environment until the product level in the UST drops below the leaking component. These leaking, nonoperational components are reported to be most often caused by improper installation practices, such as loose bung hole plugs not being tightened at installation or vent lines being handtightened on top of the tank.

Two solutions are available to stop this type of release: either ensure proper installation of these different types of fittings or eliminate overfills. Elimination of overfilling of the tank is the surest remedy and is probably the easiest to accomplish with overfill shutoff devices now widely available. Most releases associated with nonoperational components would be prevented if overfills were successfully eliminated.

d. *Spills and Overfills.* In addition to episodic releases from nonoperational components, there is an even more prevalent source of release that takes place at the tank fill port during tank filling. Although usually small in volume, spill and overfill releases are probably the most common causes of release from UST systems. These releases usually occur at the surface of the ground around the top of the fill pipe when the delivery truck's hose is disconnected from the fill pipe. Most of these releases go unreported due to the typically small volume of product lost (generally, less than the volume of the delivery truck's hose). Most excavated bare steel tanks, however, show evidence of spilled material, such as dissolved asphalt coating near the fill pipe. Regulatory officials in Dade County (Florida) cite spills and overfills as the primary cause of release—45 percent of reported releases. These surface releases are at least twice as numerous as tank or piping releases.

Spills most often occur at the fill pipe opening when the delivery truck's hose is disconnected, usually releasing only a few gallons. Overfills occur far less frequently but usually release much larger volumes. Overfills generally result in a release from loose, nonoperational components located above the tanks (as discussed in the previous section), or from the top of the tank's vent pipe as product is forced out during overfilling of the system. Experienced installation contractors emphasize to EPA that the control of spills and control of overfills are two different problems and equipment that controls one may not control the other.

3. Industry Codes and Practices

In the preamble to the proposed rule (52 FR 12670), EPA identified numerous industry consensus codes and recommended practices that influenced the development of the proposed regulatory program. A table was provided listing several codes and practices concerning the proper management of UST systems that have been developed, mostly in the past decade, by industry associations, nationally recognized professional organizations, and independent testing laboratories. Since the proposal of the Federal rule over a year ago, these consensus code-making groups and industry standard-setting activities have continued at an increased rate. (Refer to section IV.H.1. for a more detailed discussion clarifying the use of codes developed by nationally recognized organizations or independent testing laboratories.)

Table 1 reflects a sampling of the current status of this national consensus code-making network. The codes and standards marked with an asterisk have been reviewed, updated, or revised over the past year. For example, last summer, the American Petroleum Institute reviewed several of its recommended practices (e.g., API 1631 and 1615) and improved the guidance provided in these documents. In addition, several new codes are now under development or have been recently added. For example, the National Leak Prevention Association was formed and developed an industry consensus code for the interior lining of tanks (NLPA 631)

BILLING CODE 6560-50-M

TABLE 1. SELECTED NATIONAL CONSENSUS CODES AND RECOMMENDED PRACTICES FOR UST MANAGEMENT

DOCUMENT NUMBER	MAJOR TECHNICAL TOPICS OF THE FINAL EPA UST RULE							
	DESIGN AND CONSTRUCTION	CORROSION PROTECTION	INSTALLATION	UST SYSTEM REPAIR AND RETROFIT	OPERATING REQUIREMENT	RELEASE DETECTION	RELEASE REPORTING AND CORRECTIVE ACTION	CLOSURE
American National Standards Institute (ANSI)								
ANSI B31.4	x	x	x	x	x	x	x	x
American Petroleum Institute (API)								
* API 5L	x							
* API 12F	x							
API 650	x							
API 1604								x
* API 1615		x	x		x	x		
API 1628						x	x	
* API 1631		x		x	x	x		
API 1632	x	x		x	x			
API 2202								x
American Society for Testing and Materials (ASTM)								
ASTM (Steel Piping, Tubing, and Fittings)	x							
* ASTM A 53-87b	x							
* ASTM A182/A182M-87	x			x				
* ASTM D 4021-86	x							

TABLE 1. SELECTED NATIONAL CONSENSUS CODES AND RECOMMENDED PRACTICES FOR UST MANAGEMENT (CONTINUED)

DOCUMENT NUMBER	MAJOR TECHNICAL TOPICS OF THE FINAL EPA UST RULE							
	DESIGN AND CONSTRUCTION	CORROSION PROTECTION	INSTALLATION	UST SYSTEM REPAIR AND RETROFIT	OPERATING REQUIREMENT	RELEASE DETECTION	RELEASE REPORTING AND CORRECTIVE ACTION	CLOSURE
Association of Composite Tanks (ACT)								
* ACT 100	x	x	x		x			
Factory Mutual (FM)								
FM 1920	x		x					
National Association of Corrosion Engineers (NACE)								
NACE RP-0169-83	x	x	x	x	x			
NACE RP-0172-72	x	x		x				
NACE RP-0184-84		x		x				
NACE RP-0275-75	x	x						
NACE RP-0285-85	x	x	x	x	x			
NACE RP-0572-85	x	x	x	x		x		
National Fire Protection Association (NFPA)								
* NFPA 30	x	x	x		x	x		x
* NFPA 321	x						x	x
* NFPA 327					x			
* NFPA 328							x	x
* NFPA 329					x	x	x	x
* NFPA 385					x			
National Leak Prevention Association (NLPA)								
** NLPA 631	x	x	x	x				x

TABLE 1. SELECTED NATIONAL CONSENSUS CODES AND RECOMMENDED PRACTICES FOR UST MANAGEMENT (CONTINUED)

DOCUMENT NUMBER	MAJOR TECHNICAL TOPICS OF THE FINAL EPA UST RULE							
	DESIGN AND CONSTRUCTION	CORROSION PROTECTION	INSTALLATION	UST SYSTEM REPAIR AND RETROFIT	OPERATING REQUIREMENT	RELEASE DETECTION	RELEASE REPORTING AND CORRECTIVE ACTION	CLOSURE
Owens Corning (OC)								
OC 3-PE-9632-A	x		x					
Petroleum Equipment Institute (PEI)								
• PEI/RP100	x	x	x	x		x	x	x
Steel Tank Institute (STI)								
STI (Installation of STI-P3)		x	x					
STI (Interior Corrosion Control)	x	x	x	x				
STI (Exterior Corrosion Protection)	x	x	x					
STI (Dual Wall USTs)	x	x	x					
Underwriters Laboratories (UL)								
UL 58	x							
UL 567	x	x						
• UL 1316	x		x					

TABLE 1. SELECTED NATIONAL CONSENSUS CODES AND RECOMMENDED PRACTICES FOR UST MANAGEMENT (CONCLUDED)

DOCUMENT NUMBER	MAJOR TECHNICAL TOPICS OF THE FINAL EPA UST RULE							
	DESIGN AND CONSTRUCTION	CORROSION PROTECTION	INSTALLATION	UST SYSTEM REPAIR AND RETROFIT	OPERATING REQUIREMENT	RELEASE DETECTION	RELEASE REPORTING AND CORRECTIVE ACTION	CLOSURE
Western Fire Chiefs Association								
* UFC 1985	x	x	x	x	x	x	x	x

* Revised in 1987
** Drafted in 1987
x - There is a code or recommended practice.

BILLING CODE 6560-50-C

Table 1 provides a snapshot of the depth and scope of the collective wisdom that has developed over the past several years in the United States concerning the proper standards for UST systems. The recent updates and additions to this list of industry consensus codes and recommended practices reflect what appears to be a resurgence of interest in several areas of sound UST management practices. Numerous commenters on the proposal cited specific developments in these consensus codes and provided copies of some of the most recent codes that were added or updated and revised. In general, they provided a reminder to EPA that this improving body of knowledge should be understood and considered during the development of today s final rule.

4. Industry Trends

The nature and extent of the public response to the proposal has generally confirmed that a significant level of voluntary industry upgrading and replacement programs is already underway. The closure and replacement trends briefly discussed in the preamble to the proposal (52 FR 12671) were confirmed by some commenters. Numerous major oil companies, independent marketers of retail motor fuel, transportation fleet operators (government and private), and various manufacturers with USTs have clearly embarked on their own UST system management programs before promulgation of today's final rule.

One of the most encouraging trends has been the increasing use of protected UST systems nationwide. EPA estimates that there are currently over 450,000 UST systems in use today that are protected from external corrosion. This expanding use of an important and necessary approach to the prevention of releases has increased rapidly over the past three years, particularly after the Interim Prohibition went into effect in May 1985 (section 9003(g) of RCRA), making illegal the installation of bare steel UST systems. EPA estimates that, during the past three years over 50,000 new protected tanks were installed annually. To date, over 210,000 FRP tanks, 120,000 coated and cathodically protected tanks, and 65,000 steel-FRP composite tanks have been installed. In addition, an estimated 70,000 tanks have had their interiors lined to prevent releases, and another 50,000 UST systems are estimated to have been provided with field-installed corrosion protection systems. According to tank manufacturers, the number of new bare steel tanks installed over the past three years has dropped precipitously.

Early findings from several local UST programs visited by EPA staff since the proposal have confirmed the beginnings of an accelerated rate of closure of old, substandard UST systems (for example, in Suffolk County, New York; Austin, Texas; Dade County, Florida; and Sunnyvale, California). A rapid rate of closure appears to manifest itself when each of these, and several other, local UST programs initiate their release detection requirements. Thus, EPA's earlier projections that as much as three-fourths of the existing UST universe will be closed, upgraded, or replaced to the requirements of the Interim Prohibition within 10 years appears to be realistic (52 FR 12671). Today's final rule will further ensure that these positive changes are accomplished and increased.

EPA believes these are important developments because the successful implementation of this program depends a great deal on the regulated community's voluntary compliance. The Agency is convinced that the most widespread compliance will be facilitated by technically sound standards that are capable of easy implementation by a highly varied regulated community. Thus, as much as possible, the Federal technical requirements must rely on familiar industry codes and build on recognized and effective trends occurring in the field of UST management that are consistent with protection of human health and the environment.

5. UST System Technology Development

As discussed in the preamble to the proposal, the array of technical control options available to address causes of releases, as well as response to releases that occur, also appears to be growing. Numerous commenters provided technical information to EPA about newly available equipment being marketed for use in the prevention, detection, and correction of releases from UST systems. New equipment for use either inside or outside of the UST system to detect releases from the underground tank or attached piping is being introduced for sale at many trade shows and industry fairs nationwide, including less expensive methods for providing secondary containment with interstitial monitoring for both existing and new UST systems.

Several new types of equipment capable of preventing spills and overfills appear to be less costly and more easily retrofitted to existing tanks than earlier models. For example, several new models of line leak detectors have recently been introduced to the UST market that are more sophisticated and sensitive than older types of equipment. In addition, numerous companies have contacted EPA about their development efforts in the area of retrofitting preventive devices onto existing tanks or refurbishing old tanks. Makers of nylon tanks are in the process of soliciting the approval of Underwriters Laboratories of Canada in that country. Finally, vapor gas vacuum extraction techniques for use in the subsurface cleanup of volatile substances are also under accelerated development and investigative use in several places nationwide. This cleanup technique has reportedly had widespread use in West Germany for a number of years.

In summary, business in the UST control technology sector appears to be booming, and invention is proceeding at a rapid pace. All this activity is a good indication that in the future, simpler, cheaper, and more dependable equipment will be produced to aid in the prevention, detection, and correction of releases. Experienced persons in UST management in the public and private sectors have told EPA staff that the current level of control technology development by far exceeds any previous efforts within this industry. In order to avoid interfering with this ongoing development of innovative and more environmentally protective new technologies, the Agency has chosen to write regulations that allow room for these new developments.

6. Leaking USTs Present a Unique Regulatory Challenge

EPA believes its approach to setting standards for UST systems on a national scale will have to be different from most national environmental programs because the UST problem is significantly different. This difference is mainly due to three factors: The large number of facilities to be regulated, the comprehensive scope of the regulations, and the nature of the regulated community.

The most significant problem is the sheer size of the regulated community. Nationally, over 700,000 UST facilities account for about 2 million UST systems, an average per state of about 14,000 UST facilities and 40,000 UST systems. Estimates indicate that roughly 75 percent of existing UST systems are unprotected from corrosion. In addition, because a relatively high proportion of UST facilities (10 to 30 percent) already have had a leak or will soon leak unless measures are taken to upgrade them, the average number of leaking UST systems may range from 1,400 to 4,200 per state in the near future.

The large number of tank owners and tank systems has also led EPA to conclude that the final federal UST standards must include a phase-in period for certain requirements that apply to existing tank systems. Although all federal requirements are in effect immediately for new tanks, owners and operators will have additional time to upgrade existing tank systems to the corrosion protection standard for new UST systems, and to install release detection equipment for existing UST systems. This phased-in approach is needed to establish a reasonable schedule that recognizes the limited capability of 700,000 UST owners and supporting service and manufacturing industries to respond immediately to new national regulations, and provides sufficient flexibility for implementing agencies. The experience of states that have already been operating UST regulatory programs is that it takes several years for most owners or operators of existing UST systems to understand, plan, and arrange for the purchase, scheduling, and installation of necessary services and equipment required by the regulations. The phase-in approach also has the added benefit of allowing time for continued development and improvement of available technologies in the marketplace for prevention and detection of releases from UST systems (as discussed previously in this section of the preamble).

In addition, today's final rule establishes comprehensive requirements for the management of a wide range of UST systems. These final standards for UST systems are designed to reduce the number of releases of petroleum and hazardous substances, increase the ability to quickly detect and minimize the contamination of soil and ground water by such releases, and ensure adequate cleanup of contamination. To do this, the standards in some way must affect every phase of the life cycle of a storage tank system: Selection of the tank system; installation, operation and maintenance; closure and disposal; and cleanup of the site in cases of product release. As a result, these standards must be technically adequate to ensure the wide array and needed level of improved performance when implemented. At the same time, these wide ranging requirements must be straightforward enough to be understood and to be carried out successfully hundred of thousands of times nationwide.

A third problem is the nature of the regulated community. A large proportion of USTs are owned by small businesses with $500,000 or less in total assets. For example, 72 percent of all retail motor fuel outlets are owned by small businesses. An important influence in the making of today's technical standards has been EPA's attempt to minimize the regulatory impact on small businesses without compromising the statutory requirements to protect human health and the environment. EPA's efforts to minimize the regulatory impact are discussed in a Regulatory Flexibility Analysis conducted for this rule, as specified by the Regulatory Flexibility Act of 1980, and a summary of that analysis is presented later in this preamble.

Specifically, the Agency is convinced that the national UST standards must be kept simple and implementable by state and local officials because many UST facilities are owned and operated as small local businesses, such as "Mom and Pop" gasoline service stations and convenience stores. These small entrepreneurs, who are used to operating their business with minimal regulation, will be significantly affected by environmental regulations for UST systems. The experience of state and local agencies with UST programs is that large national businesses that own tanks are generally willing and have already begun to comply with UST requirements. Owners of small businesses, however, generally need constant reminders and technical assistance to bring them into compliance. Given the nature of this regulated community, a regulatory program often will be most effectively carried out by the level of government closest to the problem, and thus able to respond quickly and to create a visible presence.

7. Emerging State and Local UST Programs and EPA's Approach to Regulation

Many states and localities have adopted requirements applicable to UST systems. Although these state and local requirements are diverse and vary in stringency, EPA believes that the formulation of federal standards should build upon the many effective state and local programs now in operation or about to begin operating in order to utilize this reservoir of accumulated UST experience in a way that can rapidly develop into a strong federal-state partnership for addressing this national concern. Section 9004 also indicates Congressional intent that states with effective programs are to play a major role in implementing the program.

At least 18 states and hundreds of local programs are currently addressing the ground-water contamination and cleanup problems posed by leaking UST systems through established regulatory programs. Several states, such as California, New York, and Florida, and local UST programs such as those in Suffolk County (New York), Dade County (Florida), and Austin (Texas), have established specific UST system regulations that include standards for design, construction, and installation of new UST systems; closure, retrofitting, and repair of existing UST systems; and release detection and corrective action requirements for all UST systems. EPA believes this type of state and local UST program activity nationwide will increase significantly with today's promulgation of EPA's technical standards. Similar to the experiences in the three lead states identified above, other states will begin to wrestle for the first time with the reality of how to implement their UST programs. As the dangers posed by existing UST systems become more widely known, local UST programs and involvement should increase significantly over current levels.

Given the large number of UST facilities, tank systems, and potential cleanups needed, EPA is convinced that many aspects of this regulatory program will be most effectively carried out at the state level of government. Local government involvement in this regulatory program will be important. For example, a small city with about 700 facilities and 2,000 tank systems within its jurisdiction should be able to implement a manageable regulatory program. If each of those 700 facilities installs one new tank during the next five years, that would be about three installations per week. If that small city requires a city inspector to be present at each installation, an inspector must be in the field three times a week for this task alone. In addition, the inspector could be required to be present for periodic tank testings, closures, upgrading or retrofit, and cleanups.

Confronted with the above implementation realities, EPA has developed a more decentralized approach for addressing the realities of the national UST regulatory program. This approach is based on several critical factors. First, as more and more state and local governments become involved, the work of the UST program must be routinely carried out in thousands of jurisdictions nationwide. Several operating state and local UST programs already report that they are very busy "running the store," expressing surprise at the size of the regulated community, and that fairly

simple tasks must be routinely repeated numerous times for the implementing agency to be successful in bringing UST systems into, and maintaining, compliance.

Second, visits to several state and local UST programs have shown that they have often developed their own unique requirements and methods of implementation, adapted to the types of tanks, physical environment, and regulated community with which they are concerned while they are, at the same time, all geared toward solving similar technical problems. They need the flexibility to continue and to improve upon approaches which address the specific environmental needs of their communities. They have common implementation problems, however, and have expressed the need for better technical aids, such as data management tools.

Third, many state and local governments that already implement UST programs report a significant level of visible on-site monitoring, requiring a constant "regulatory presence" to effectively ensure this regulated community's compliance with UST requirements. A significant environmental gain is achieved through implementation at the local level by these individual UST programs. Thus, improving their performance will produce maximum environmental benefits and best ensure the success of the UST program nationwide. As the head of the "distribution system" of UST-related technical information and implementation tools, EPA believes that its implementation efforts should be focused on serving the network of state and local programs through listening to their concerns and helping them solve implementation problems with tools that improve the effectiveness of their programs.

Finally, EPA believes that a more decentralized approach to the federal implementation of the UST program is needed to ensure real gains in protection of human health and the environment. Because there are so many UST sites nationwide, it would be very difficult to establish a credible federal implementation presence through compliance monitoring and enforcement at the federal level. A more realistic and effective approach is for EPA to provide support tools and guidance to state and local regulators that can be used to improve their programs compliance performance.

In adopting this role, the Agency has recognized that it must not only establish sound national standards but, more importantly, must focus on improving the performance of the state and local implementing agencies. Approval of state programs to operate "in lieu of" the federal program takes on a new meaning under this approach because it becomes a basic soundness test to ensure that the work associated with implementation of these state or local requirements will, in fact, cause the needed level of improvement in UST system management when carried out by the regulated community. The requisite state enforcement authority and technical standards must be ensured and will be the focus for approval by EPA. Thus, overall successful performance and implementation of this new national program is less focused on implementing detailed, national technical standards than it is on establishing the national UST program in a way that ensures effective, environmentally protective programs at the grassroots level and improving the performance of these programs over time. EPA's final requirements for state program approval are presented in detail elsewhere in today's **Federal Register**.

Thus, in recognition of its approach to UST implementation, EPA has attempted to establish final technical standards that are protective of health and the environment but, at the same time, are simple, understandable and implementable by state and local officials. EPA also recognizes that there is often more than one proper way to address specific technical problems that are the focus of the final regulations. Therefore, the Agency has attempted to identify and offer as many effective alternative technical approaches as possible particularly where this flexibility can be applied in the future by the implementing agencies. In this way, the final technical requirements remain focused on the key environmental problems which the implementing agencies face. Promoting the network of state and local implementation is the best way to ensure that significant protection of human health and the environment will be achieved by today's final requirements.

G. Conclusions Since Proposal

EPA has drawn several conclusions from the influences discussed above and in the background sections of the preamble to the proposed rule (52 FR 12663–12671). Some of these conclusions support the direction and emphasis set forth in the proposal, and others indicate a need for change in the final rule.

Given the large size of the existing regulated universe and the proportion of these UST systems that have leaked or are presently leaking, there is a need to finalize today's rules as an important step to alleviate this important threat to the nation's ground-water resources. The number of sites needing significant cleanup due to a number of poor past UST management practices is expected to be in the tens of thousands nationwide.

Cause-of-release information related to unprotected tanks supports EPA's proposed approach for upgrading of unprotected tanks. The new information, however, indicates a need for more frequent monitoring of unprotected tanks than was proposed. By contrast, protected tanks appear to need less frequent monitoring than proposed. Also, pressurized piping systems need more stringent monitoring than was proposed.

Increased activity in the review and improvement of national consensus codes supports EPA's proposed reliance on these codes as providing the most up-to-date consensus practices and expertise concerning what constitutes proper UST system management. The nationwide increase in the use of protected systems, the recent number of tank closures, and the development of new prevention, detection, and corrective action technologies are encouraging. The final rules must be designed to foster and take advantage of these trends. They must be simple and easily implementable by the regulated community to ensure the maximum level of voluntary participation by tank system owners and operators. The Agency continues to believe that the size and nature of this regulated universe presents several unique regulatory challenges that necessitate the phase-in of some of the requirements for existing UST systems to ensure that genuine implementation is accomplished.

The continuing and rapid emergence of numerous state and local UST programs is expected and will be encouraged by EPA because this is where the "real work" of this new national program must actually take place. The Agency's approach to UST program implementation must start with a technically sound set of national standards. These requirements, however, must be kept simple and implementable because most improvements in actual UST performance (and protection of human health and the environment) are expected to be achieved by working closely with state and local governments over time to increase the level of the effectiveness of their UST programs.

which release detection method to use. These commenters said that any percentage method would be cumbersome and difficult to enforce because it would be difficult to measure concentrations in the UST system.

After consideration of all of these comments, EPA concluded that neither a percentage rule nor a comprehensive list of petroleum or petroleum-based substances is a practical solution to the problem of how to determine which blends and mixtures of regulated substances must meet the release detection standards for new UST systems storing hazardous substances. (See the discussion concerning "regulated substance" in section IV.A.4.a. earlier in this preamble for the reasons why the Agency rejected the proposed comprehensive list approach.) The main drawback to the percent approach is the variability of a meaningful value. For example, 5-percent pesticide mixed in oil or 5-percent pentachlorophenol mixed in mineral spirits for application purposes should be stored in USTs with secondary containment and interstitial monitoring because of the high toxicity of these substances and the unavailability of highly effective corrective action technologies and release detection. In contrast, a hazardous substance such as methanol that is highly flammable as a pure product can be blended in relatively high proportions with motor gasoline and not change the flammable nature of the motor gasoline. It can be safely stored in a protected single-walled tank because release detection and corrective action technology are available for the petroleum-methanol mixture; and these methods are the same or very similar to those used for petroleum products. Thus, the appropriate percentage value to use in determining the release detection requirements that must be used at a new UST storing a mixture of regulated substances should be determined by the implementing agency based on a consideration of the following factors: The availability of reliable and sensitive release detection, the availability of effective corrective action technologies, and the inherent toxicity of the substance stored.

The final rule, therefore, does not contain a "50-percent rule" to determine how mixtures of petroleum and hazardous substances should be regulated. Rather, the final rule lists specific substances subject to the petroleum UST system requirements and uses a *de minimis* standard to determine when other mixtures of petroleum and hazardous substances are subject to petroleum UST system standards. A "petroleum UST system" is, thus, one which contains petroleum or petroleum and *de minimis* amounts of other regulated substances. Any other UST system is a hazardous substance UST system and must be provided with secondary containment or obtain a variance. The *de minimis* amount of hazardous substance mixed with a petroleum product is that amount in which the additional hazardous substance does not alter the detectability, effectiveness of corrective action, or toxicity of the petroleum to any significant degree.

(13) Hydraulic Lift Tank. "Hydraulic lift tank" means a tank holding hydraulic fluid for a closed-loop mechanical system that uses compressed air or hydraulic fluid to operate lifts, elevators, and other similar devices.

One commenter stated that the definition of this term in the proposal did not include elevator lifts. In response, the Agency changed this definition to include lifts that operate by compressed air or hydraulic fluid. This change properly includes all elevator lifts within the hydraulic lift definition.

(14) Implementing Agency. "Implementing agency" means EPA, or, in the case of a state with a program approved under section 9004 (or pursuant to a memorandum of agreement with EPA), the designated state or local agency responsible for carrying out an approved UST program.

As the definition states, section 9004 empowers the Agency to approve a state program to operate in lieu of the federal program. The state agency responsible for carrying out an approved program is the lead implementing agency for the UST program. A state may decide to work through designated local agencies to carry out the approved program. It is important to note that the local or state agency responsible for the enforcement of the UST regulations, particularly once the state program is approved, is expected to be an owner and operator's first contact in any situation involving a leaking UST system. The state and local agencies could then contact EPA if necessary.

(15) Maintenance. "Maintenance" is the normal operational upkeep to prevent an UST from releasing product. This definition has been added since proposal in response to requests by several commenters for clarification of this term. The comments and the use of this term are discussed further in section IV.C.2. of this preamble.

(16) New Tank System. "New tank system" means a tank system that will be used to contain an accumulation of regulated substance and for which installation has commenced after the effective date of this regulation.

Existing tanks that are converted after the effective date of this regulation from tanks storing non-regulated substances to tanks storing regulated substances are considered new UST systems and are required to meet new tank standards.

(17) Petroleum UST System. "Petroleum UST system" means an UST system containing petroleum or mixtures of petroleum with *de minimis* quantities of other regulated substances. Such systems include those containing motor fuels, distillate fuel oils, residual fuel oils, lubricants, petroleum solvents, or used oils.

In the proposed rule, a petroleum UST system was defined as a system that contained an accumulation of petroleum or a mixture of regulated substances and petroleum in which petroleum comprised greater than 50 percent of the weight or volume of the mixture. In the Supplemental Notice, the Agency proposed the development of a list of petroleum or petroleum-based substances subject to the petroleum UST system requirements. Based on public comment, however, the Agency has decided that it would be unworkable, time consuming, and largely unnecessary to specifically identify all possible petroleum products, petroleum-based substances, and mixtures of these substances with hazardous substances that should be subject to petroleum UST standards.

The definition for petroleum UST systems has been revised in two ways in the final regulation. The 50-percent rule for mixtures has been deleted and replaced with a limitation of non-petroleum regulated substances to *de minimis* levels. Use of this approach is intended to better determine if an UST system qualifies for the new petroleum UST release detection methods (see also definition of hazardous substance UST system). In addition, a list consisting of seven general categories of substances has been added to the petroleum UST system definition to more clearly identify the major types of petroleum and petroleum-based substances that may be stored in new protected single-walled tanks with release detection rather than only in UST systems that meet the secondary containment requirements. These categories are not substances that necessarily must be defined as petroleum under CERCLA, but instead are substances for which the Agency has determined single-walled tanks with cathodic protection and

monthly release detection are adequate to protect human health and the environment. Other mixtures of regulated substances (for example, petroleum products mixed with non-indigenous hazardous substances or contaminated petroleum products) will have to be considered on a case-by-case basis by the implementing agency, using the *de minimis* rule. The EPA anticipates that few blends and mixtures will present interpretation difficulties. See part (12) of this section for an explanation of the application of the *de minimis* rule.

(18) Pipe or Piping. A "pipe" or "piping" is any hollow cylinder or tubular conduit that is constructed of non-earthen materials. This definition has been added since the proposed rule at the suggestion of a commenter (see sections IV.B.1. and IV.C.5. of this preamble for further discussion).

(19) Repair. "Repair" means to restore a tank or UST system component that has caused a release of product from the UST system.

This term has been added since proposal in response to public comments requesting additional clarification concerning the differences between repair, upgrading and maintenance. Refer to section IV.C.5. of today's preamble for further discussion of this issue.

(20) SARA. "SARA" means the Superfund Amendments and Reauthorization Act of 1986.

(21) Sump. This term has been deleted from the final rule.

Several commenters stated that this definition was ambiguous due to the inclusion of the term "temporarily." They suggested it be removed or that an actual time be substituted. The Agency agrees and has eliminated the definition from the final rule. This definition is no longer needed because the final rule no longer contains any requirements or provisions specific to sumps.

(22) Upgrade. An "upgrade" is the addition or retrofit of some portion of an UST systems, such as cathodic protection, lining, and spill and overfill controls, to improve the ability of the UST to prevent the release of product in accordance with § 280.21.

Although this term was not defined in the proposal, it has been added at the recommendation of commenters. Further discussion of upgrading is presented in section IV.B.3. of today's preamble.

(23) UST System or Tank System. "UST system" or "tank system" means an underground storage tank, connected underground piping, underground ancillary equipment, and containment system, if any. This definition has been changed to include within the UST system only underground ancillary equipment.

Two commenters suggested that the phrase "underground piping" be defined to exclude any non-wetted piping such as vent lines. EPA does not agree with the commenters. Because such "non-wetted" piping can contain regulated substances, particularly when the tank is overfilled, EPA believes that certain requirements in this rule are applicable to this type of piping. Clarification has been added in today's rule regarding which requirements are applicable to "non-wetted" piping.

(24) Wastewater Treatment Tank. "Wastewater treatment tank" means a tank that is designed to receive and treat an influent wastewater through physical, chemical, or biological methods.

This definition has been changed since the proposal so that it no longer includes only tanks regulated under the Clean Water Act. This term now refers to any tanks that are designed to treat wastewater. Of these, only some are regulated under the CWA. This change was required due to the different regulations for CWA-regulated and non-CWA-regulated wastewater treatment tanks.

B. UST Systems: Design, Construction, Installation, and Notification

The following sections present major issues raised by public comments and new information gathered since proposal concerning the design, construction, installation, and notification of UST systems. Also, these sections discuss changes in the final rule based on these public comments and this new information.

1. Design and Construction Requirements (§ 280.20)

As discussed in the preamble to the April 17 proposal (52 FR 12695), EPA concluded that national design and construction requirements are needed for new UST systems, especially with regard to corrosion protection. In discussing general approaches to design and construction standards, EPA concluded that industry codes of practice adequately address proper design. EPA invited comments on the methods that should be used to recognize development of future codes of practice that meet the intent of the requirements of the proposed rule concerning the design, construction, and protection from corrosion of UST systems. Many comments were received by EPA on this issue.

Many commenters suggested that EPA set detailed design standards in the final rule. Some new or alternate methods for tank design, fabrication, or protection techniques were suggested. For example, a few commenters suggested that concrete tanks should be more explicitly allowed. One suggested adding unbonded polyethylene wrap as an option for corrosion protection. EPA still believes, however, that the general approach taken at proposal of relying on industry codes of practice, rather than specifying detailed regulatory standards, is more appropriate because this approach allows new and effective technologies to be developed and put into use.

In today's final rule, EPA simply requires that all new tanks be designed and manufactured according to standards of a nationally recognized organization or an independent testing laboratory. These requirements also allow the use of concrete or stainless steel tanks if the implementing agency determines that the design, construction method, and corrosion protection system would prevent the release of any stored regulated substances in a manner that is no less protective of human health and environment than tanks allowed by the requirements of § 280.20(a) (1)–(4). Specific design and construction issues are discussed in detail below.

a. *Tank Requirements (§ 280.20(a)).*

(1) Fabrication. As discussed in the preamble to the April 17 proposal (52 FR 12696), EPA proposed to require one of three fabrication techniques for tanks: Fiberglass-reinforced plastic (FRP), coated and cathodically protected steel, and steel-fiberglass-reinforced plastic composite. The allowed fabrication techniques were chosen to provide protection of buried structures from galvanic corrosion by using either a cathodic protection system or noncorrodible materials. Although comments were submitted suggesting flaws in each of the UST types listed in the proposal, the data submitted indicate excellent performance of all these protected tanks. Recent studies sponsored by EPA have yet to identify a documented case of failure by corrosion of these protected, "new generation" tanks having in-service ages of up to 30 years. Therefore, today's rule is unchanged with respect to these new tank fabrication requirements.

Information obtained by the Agency since proposal on performance of each of the three fabrication techniques specifically allowed in the final rule is briefly summarized below. Additional discussion is presented earlier in the Causes of UST Releases section of today's preamble.

FRP Tanks. Nearly 200,000 FRP tanks have been installed nationwide, with

some as old as 22 years old. There were some failures of these tanks when first introduced; however, modification of installation practices and tank design has reduced the annual failure rate to less than 0.05 percent. If the tank fails, failure usually occurs soon after installation and is due to improper installation.

Coated and Cathodically Protected Tanks. Approximately 100,000 of these tanks have been installed at UST sites. Though some of the tanks are over 20 years old, the majority have been installed within the last 5 years. There have been very few failures of these systems to date. None of the failures have resulted in a warranty claim. The few failures that did occur were due either to improper installation practices or to not following monitoring procedures correctly. Cathodic protection technology has been widely applied to pipelines and other buried metal structures for over 30 years. A dramatic reduction in failures has resulted from the use of cathodic protection on pipelines.

Composite Tanks. This tank type is not as popular in this country as the other types of protected tanks, but has been widely used in Europe. Approximately 65,000 composite tanks have been installed in the U.S. and have been in use for about 25 years without a single reported corrosion-related failure. The current manufacturing standards for these tanks are much more stringent than they were in the past. Even though there is not as much historical performance data on composite tanks as there is for FRP or coated and cathodically protected tanks, EPA has confidence in their future performance because of the fault-free performance of the older tanks of this type and the more stringent manufacturing standards that are now in use.

(2) Corrosion Protection—Corrosion Experts. EPA proposed in § 280.20(a) that field-installed cathodic protection systems should be designed by an independent corrosion expert. The Agency requested comments on the merits of this approach, and several comments were received by EPA on this issue. Most of the comments strongly opposed the requirement of an "independent" corrosion expert because they felt that this requirement would place an unnecessary financial burden on owners. In addition, they pointed out that the term "independent" should not be required because very few independent corrosion experts are available. Some suggested that the term "independent" should be replaced with "certified" or "qualified." Others suggested the use of "in-house" expert because an "in-house" corrosion expert would have better working knowledge of the systems to be protected, condition of use, and the surrounding environmental condition.

Although no clear evidence was submitted to indicate that corrosion protection systems that are designed by independent experts would perform better or worse than systems designed by non-independent experts, information obtained from public comments indicates that relatively few independent corrosion experts are available to fulfill the large demand for system designs. In the final rule, EPA has, therefore, deleted the requirement that the corrosion expert must be independent. Thus, the use of in-house personnel is acceptable provided that they meet the definition of "corrosion expert."

Composite Tanks. In the preamble to the proposal (52 FR 12698), EPA invited comments, standards, and documented performance data for FRP-steel composite tanks (also called "clad" tanks). Several comments were received by EPA on the issue of whether or not cathodic protection is needed for composite tanks.

EPA believes that cathodic protection for this type of tank is not needed because the exterior of the steel tank is bonded to a thick fiberglass shell that has inherent corrosion resistance properties. EPA was unable to identify one case where this type of tank has failed due to corrosion and also noted that one major manufacturer of this type of tank recently began to offer lifetime guarantees from failure for its tanks. Thus, in the final rule, EPA has retained the provision that, as long as these tanks are designed and manufactured according to a recognized national standard of practice, FRP-steel composite tanks do not require cathodic protection.

At proposal, industry codes for composite tanks were still in draft form. Commenters suggested that composite tanks should be excluded from the final rule until UL 1746 is final. EPA disagrees with this comment because manufacturers are now being approved under this standard in its draft form. Moreover, EPA has amended the rule to reference a new industry consensus design standard, ACT-100, "for the fabrication of FRP clad or composite underground storage tanks" submitted by a commenter. Accordingly, EPA has concluded that it is unwarranted to delay allowing the use of composite tanks given their outstanding performance to date and the availability of the ACT-100 design standard and the draft UL 1746 performance standard.

No 12,000 ohm/cm Exclusion. As discussed in the preamble to the April 17, 1987, proposal (52 FR 12698), EPA had proposed dropping the 12,000 ohm/cm exclusion for underground tanks contained in the Interim Prohibition (see section 9003(g)(2) of RCRA). As stated in the proposal, this measurement alone does not adequately define a soil's propensity to corrode. Soil resistivity varies with depth and moisture content, and corrosivity has been demonstrated in soil with a 30,000 ohm/cm reading.

Many comments were received by EPA on this issue. Some requested that EPA retain the 12,000 ohm/cm exclusion in the final rule. Others agreed with the proposed approach stating there is no technical basis to establish a single number by which the corrosivity of all soils can be measured. EPA continues to believe that use of a single resistivity variable is inadequate to measure the propensity to corrode. Therefore, EPA has decided not to include the 12,000 ohm/cm exclusion in the final rule.

Some commenters suggested that there are situations where the surrounding soils are not corrosive and requested that a mechanism for relief from the corrosion protection requirements be provided for those situations; for example, a soil that is uniform and very dry (low moisture content), where the ground-water table continuously stays several feet below the bottom of the UST installation, and the area above the installation is paved to prevent percolation of rainfall and runoff. EPA agrees with these commenters and is including § 281.20(a)(4), which allows an exemption for metal tanks from the requirement that all UST systems be corrosion protected provided that a corrosion expert determines that the site is not corrosive enough to cause a release during the tank's operating life. In addition, owners and operators must retain records of this determination for the operational life of the tank. These records should include evidence of the corrosion expert's qualifications and the results of the site assessment.

Alternative Designs. In the proposed rule (§ 280.20(a)(4)), other tank designs are allowed if the implementing agency determines them to be no less protective of human health and the environment. In response to the proposal, commenters requested approval for several types of tanks including those constructed of concrete, stainless steel, and steel encased in polyethylene. Several other commenters reported to the Agency

other potentially useful designs such as nylon tanks.

As a result of these comments, EPA sought information on several of these alternative designs and continues to believe that, with certain materials of construction and under certain site-specific soil conditions, alternative systems can be designed that will adequately protect human health and the environment. In addition, EPA is aware of new design techniques being researched that appear promising but are not commercially available. The Agency does not desire to restrict or eliminate emerging technologies and recognizes the numerous site-specific factors that may allow for the use of alternative designs. Therefore, today's rule continues to provide that the implementing agency may approve alternatives that are no less protective of human health and the environment than the specified designs.

The Agency has not, however, added any of these alternative designs to the designs specifically allowed by the regulation because there is not enough documented history about the performance of these systems or industry consensus codes governing their fabrication and use. One system, for example, consists of a steel tank surrounded by a thick, high-density polyethylene "jacket." The "jacket" is intended to provide both corrosion protection and secondary containment. It has been reported to EPA that over 1,000 of these tanks have been installed. Some local and state implementing agencies have been approving this design. Sometimes, specific monitoring or demonstrations have been required to ensure that the design provides protection equal to that provided by the other types of protected tanks. It has also been reported that several manufacturers of this type of tank have begun the process of working with independent testing laboratories toward developing testing and evaluation methods for steel tanks encased in noncorrodible secondary containment structures. This process may take several years to complete however. The Agency does not wish to unduly restrict the use of this type of product in the interim and recognizes that the manufacturers need to have continued product sales to be able to fund the needed development and testing of these evaluation methods. Thus, EPA views the type of approval allowed under § 280.20(a)(4) as essential to the continued development of such new tank systems. For example, the long-term performance of a system is difficult to establish in the absence of allowing actual installations in the field. Accordingly, the final rule preserves the proposal's allowance of the use of alternative new designs as long as they are approved by implementing agencies to adequately protect human health and the environment.

Implementing agency approval of alternative new tank designs, or special designs for specific sites, will only be provided if the UST system is determined to be no less protective of human health and the environment than the other types of tanks already listed in today's rule. Accordingly, an alternative design must meet the two basic criteria that all of the other methods meet: (1) It must be designed and constructed to prevent releases due to structural failure for the operating life of the system, and (2) it must be designed to prevent releases due to corrosion for its operating life. For example, the "jacketed" tanks described earlier obviously meet the structural criteria because each inner steel tank is built to the U.L. 58 standard. These types of tanks are also designed to prevent releases due to corrosion because the secondary containment jacket isolates the steel tank from the surrounding soil. However, in the absence of an existing consensus code applicable to the jacket, or a long-term performance record, it is difficult to determine if releases due to corrosion will be prevented for the tanks' operating life. Thus, the implementing agency could allow the use of this type of tank if a national consensus code is eventually developed for the jacket or this outer jacket is determined to be free of holes at least as frequently as cathodically protected tanks are checked (after installation and every 3 years thereafter). The integrity of this outer jacket can be ensured in several ways, including several methods of interstitial monitoring or the periodic performance of a tank structure-to-soil potential measurement by a cathodic protection tester.

b. *Piping Requirements (§ 280.20(b)).* The proposed rule (52 FR 12693) required the same corrosion protection for piping systems as used for the underground storage tank itself. Two types of protection systems were allowed: fiberglass piping, or coated and cathodically protected steel piping. The same as for the tanks, provisions for approval of alternative piping methods were also proposed. Today's rule remains largely as proposed, although the requirement for an "independent corrosion expert" has been revised to delete the requirement for independence, and an option for approval of alternative designs by a corrosion expert has been added. These issues are discussed below. In addition, the extent of corrosion protection of components and possible alternate materials of construction were highlighted as issues in the proposal for public comment and are discussed in detail below.

(1) Independent Corrosion Expert. EPA proposed in § 280.20(b) that steel piping coated and cathodically protected with a field-installed cathodic protection system must be designed by an independent corrosion expert. The Agency requested comments on the merits of this approach. Several comments were received by EPA regarding the need for an independent corrosion expert concerning the protection of steel tanks. (See section IV.B.1.a.(2). for a discussion of this issue.) In response to these comments, EPA has removed the requirement that the corrosion expert must be independent.

(2) Corrosion Protection of Tank System Components. The Agency invited comments on which tank components, if any, should be cathodically protected and, if cathodic protection is not required, what form of corrosion protection is appropriate. Several comments were received by EPA on this issue. Some suggested that EPA should require cathodic protection on FRP-steel composite tanks as well as any steel fittings on FRP tanks. Some suggested that all metallic components of the UST system, including metallic connectors, swing joints, flexible connectors, and riser connections should be coated or cathodically protected. Other commenters suggested that cathodic protection on steel fittings on FRP tanks is unnecessary and that components like bung hole plugs and pump housings do not need cathodic protection.

EPA agrees with the commenters who stated that cathodic protection of tank fittings is not needed because these components are located at the top of the tank and rarely contact the stored product. Section 280.20(a) of the final rule has been modified to restrict the applicability of the corrosion protection requirements to "any portion underground that routinely contains product."

EPA's causes of release study indicates that the operational piping portion of UST systems is twice as likely as the tank portion to be the source of the release. Piping failures are caused equally by poor workmanship and corrosion. Threaded metal areas made active by threading have a high propensity to corrode if not coated and

cathodically protected. Today's rule specifically requires the corrosion protection of operational underground piping and components that are in contact with the soil and convey product to or from the tank (e.g., flexible connectors, swing joints, pipe fittings, and impact valves), whether in metallic or FRP piping runs. Nonoperational components, such as vent and vapor recovery lines, on the other hand, need not have corrosion protection because these components should never contain free liquid product, particularly under today's requirements for overfill prevention (see § 280.30). Metallic components, such as swing joints, do not need cathodic protection if they are placed in pump housings and are not in contact with the ground.

The Agency also invited suggestions on the use of pipes other than FRP and corrosion-protected steel pipe. One commenter suggested use of copper tubing. Today s rule allows copper tubing under two circumstances. First, copper piping would be allowed if a corrosion expert determines that the site is not corrosive enough to result in a release during the operational life of the piping. Second, copper piping would be allowed if the design and construction methods and corrosion protection are determined by the implementing agency to prevent the release of any stored substances in a manner no less protective of human health and the environment than the requirements in § 280.20(b) (1), (2) and (3).

c. *Spill and Overfill Control (§ 280.20(c)).* Design and construction requirements for new UST systems include spill and overfill equipment requirements. These additional requirements are discussed below in section IV.C.1., "Spill and Overfill Control."

d. *Other Issues. (1) Internal Corrosion.* In the preamble to the April 17 proposal (52 FR 12699), EPA solicited comments on whether internal corrosion could become a major source of failure. EPA requested comments based on the industry's field experiences with internal corrosion protection systems in terms of design, installation, efficacy of performance, and problems found. EPA also requested information on the need for internal corrosion protection and whether it should be required, particularly for all new steel UST systems.

The Agency has received several comments on this issue. Many expressed the opinion that internal corrosion is one of the causes of tank leaks. Some suggested mandating internal tank lining to reduce or to eliminate internal corrosion and thereby prevent leaks. Some suggested that EPA require the use of striker plates below fill and gauge fittings. A few suggested requiring the use of soft-tipped inventory dipsticks. Some commenters took the position that internal corrosion is not a problem and should not be regulated.

EPA agrees with the commenters who argued that tank lining will reduce the incidence of failures resulting from internal corrosion. The Agency is not, however, mandating the requirement of tank lining on new tanks because it has concluded that striker plates, now required under the consensus codes, solve the problem. At present, evidence is limited concerning the potential of internal corrosion to cause newly constructed tanks to fail. Estimates of the incidence of internal corrosion-induced tank failures range from 5 to 60 percent of the total steel tank population. Several tank lining companies submitted data that indicate internal corrosion is a significant cause of release. By contrast, internal corrosion was not found to be a significant cause of release in an EPA-sponsored study of over 400 tank closures carefully investigated by Suffolk County, New York, health department officials. The results of this study and other information lead the Agency to believe that the incidence of steel tank failures due to internal corrosion is probably less than 10 percent of the total tank universe, that it occurs most often in smaller tanks, and that it takes place later in the operational life of these tank systems. The few cases of internal corrosion holes that were witnessed in this study appeared to be generally located at the bottom of the tank fill pipe opening and often could have been prevented if striker plates had been used. These findings are corroborated by numerous tank manufacturers who submitted comments on the proposal, citing their collective experiences that internal corrosion is not a problem on tanks equipped with striker plates. Many of them suggested that the use of striker plates below the fill and gauge fittings will protect the primary location where internal corrosion occasionally breaks through.

EPA agrees with the commenters who believe that striker plates can largely eliminate the internal corrosion problem. The final rule, however, does in effect, require the use of striker plates because they are standard on new steel tanks and included in the referenced codes of practice developed by nationally recognized associations or independent testing laboratories. The Agency agrees with commenters who suggested that the use of soft-tipped dipsticks will also reduce internal corrosion. The final rule does not, however, include this alternative because it is not needed with striker plates now standard on all tanks.

(2) Manways. The Agency requested comments and information about the required use of manways on top of new tanks and whether traditional "bunghole" systems of tank entry would result in a significant reduction in releases. Several comments were received by EPA on this issue. Commenters were divided on the requirements of manways. Some of them felt that manways do not reduce the number of leaks, but may instead add another potential source of release. Some felt that the requirement of manways is necessary because a number of costly release investigations can be avoided by manual inspection from inside a tank. A few commenters supported manways but felt that their use should not be mandated.

EPA agrees with the commenters who recommended manways as a sound practice but believed they should not be required in the final rule. Although manways facilitate the manual inspection of the interior of a tank, other forms of release detection make internal inspections and, thus, the use of manways unnecessary (see discussion in section IV.B.2.g.(2), concerning internal inspections and release detection).

2. Installation (§§ 280.20 (d) and (e))

a. *Overview.* As was discussed in the preamble to the April 17 proposal (52 FR 12700–12702), improper installation is often a cause of release from various components of the UST system. The public comments on the original proposal and on the Supplemental Notice (December 23, 1987) have reinforced the belief that proper installation is critical to preventing releases from the UST system. The new causes of release information obtained by the Agency since proposal (which is discussed in section II.F.2. of this preamble) indicates that improper installation is one of the major causes of underground storage tank and piping failures. Additionally, the majority of industry experts felt that improper installation causes many of the piping failures. Though the reported failure rates of FRP and protected-steel tanks are very low, failures that have occurred are usually related to improper installation.

Some of the installation practices that have been identified as leading to UST system releases include: Non-homogeneous backfill, which is often

cited as causing localized corrosion of unprotected steel tank system components; improper selection and placement of backfill, which leads to structural failure in FRP tanks; loose fitting in the bungs and vent lines, which leak when the tank is overfilled; and improper layout, fabrication, and installation (backfill placement and inadequate cover) of the delivery piping, which can lead to loose or broken pipe and fittings.

The proposed rule addressed these installation problems in § 280.20 (c) and (d). Section 280.20(c) listed the specific requirements for conducting a proper installation. Section 280.20(d) required owners and operators to indicate on the notification form how proper installation was ensured. The comments and revisions for the final rule on both of these sections are discussed in more detail below.

b. *Installation Practices.* EPA proposed in § 280.20(c) that all tanks and piping be installed in accordance with the manufacturer's instructions and nine specific requirements that were based on the major installation steps outlined in two industry codes: Petroleum Equipment Institute RP100–86 and American Petroleum Institute 1615. The Agency requested comment on this approach, in particular the use of a final system test, after backfill is placed around the storage system but before it is placed into operation, to ensure proper installation.

Comments were received that supported the proposed approach. Many commenters, however, suggested refinements or exceptions to several of the nine specific requirements. In addition, the industry consensus codes from which the nine requirements were derived have been revised and reissued since the proposal. These two codes are now in substantial agreement, and their recommended practices are reported to be widely used by installers. One of the reasons that the Agency included the nine specific installation provisions in the proposal was to emphasize certain important basic points already set forth in the national consensus codes.

EPA now believes that the recently revised codes addressing proper installation practices are even closer in representing a national consensus and provide appropriate guidance for proper installation. The nine specific requirements have, therefore, been deleted from the final rule as unnecessary and are replaced with a more general performance standard (in § 280.20 (d) and (e)) that simply requires that owners and operators ensure that the UST systems are installed in accordance with nationally accepted codes of practice and the manufacturers' instructions (if any).

An example of an installation practice that requires the consideration of both the national consensus codes and the manufacturer's instructions is the joining of FRP piping to metallic components. The consensus codes provide general guidance concerning where and how to make such joints, but the two major FRP piping manufacturers provide specific instructions concerning the details of fabricating this type of joint.

c. *Ensuring Proper Installation.* EPA proposed in § 280.20(d) that owners and operators indicate from a list of methods on the proposed notification form which method they used to ensure proper installation. Also, proposed § 280.20(d) required that owners and operators obtain the installer's signature certifying which method was used to ensure proper installation. EPA requested comment on the advisability of requiring owners and operators to use one or more of these methods and the relative merits of each method.

In general, all comments supported EPA's contention that requirements for ensuring proper installation are warranted. Each approach that EPA had identified to ensure proper installation was favored by at least one commenter. No data were submitted to EPA in response to the proposal that showed any of these methods to be unworkable, ineffective, or preferred over all the others. Therefore, all but one of them have been retained in today's final rule, and they have been renumbered as § 280.20(e).

The one method that has been deleted from the final rule was the testing for leaks during and after installation. This method was deleted because all national consensus codes for installation require such testing during and after installation and thus this testing is part of proper installation under § 280.20(d), and not an optional method of certification as required under § 280.20(e).

Other methods of ensuring proper installation were suggested by commenters. The first suggestion was to certify owners. Although the certification of owners could improve installation practices, the Agency is concerned that the implementation of an education and testing program of this magnitude would be very difficult to accomplish and not likely to be very effective, because owners do not usually install their own tanks. Some commenters suggested that EPA develop a national installer certification program. EPA believes, however, that implementing such a program at the national level, particularly given the large number of installers necessary, would be unworkable and would delay implementation of this rule. Also, the fact that proper installation can be effectively ensured by a variety of approaches makes a national program for certification of installers unnecessary. EPA believes that state and local governments are in a much better position to develop such programs as they deem necessary.

Some commenters suggested requiring certification of installers by a professional organization. EPA is not aware, however, of any professional association that is in a position currently to certify the large number of installers expected to be needed in the following years and, therefore, has not required such certification in the final rule.

Section 280.20(e) of the final rule requires owners and operators to indicate on the notification form which method for ensuring proper installation was used. Although EPA believes that the use of one or more of the methods allowed (i.e., manufacturer or implementing agency certification of the installer; inspection of the installation by a professional engineer or the implemental agency; completion of manufacturer's installation checklist; or another method as approved by the implementing agency) will improve installation practices, today's allowance of a variety of methods will give owners, operators, and implementing agencies flexibility to choose the most appropriate methods.

EPA has also retained the requirement in the final rule that owners and operators obtain the installer's certification that the installation was properly performed. Thus, § 280.22(f) of the final Notification Requirements requires owners and operators to have the installer certify on the notification form that the UST system was installed in accordance with the performance standards of § 280.20(d). A signature block is provided on the notification form for the installer. EPA intends that owners and operators will obtain the signature of the person primarily responsible for the installation of the tank and piping system. In cases where the owner functions as the general contractor, hiring several parties to conduct the tank and piping installation, then the owner could be considered the installer.

In the proposal preamble, comments were requested on the advisability of requiring a site plan and, if it were required, what level of detail was necessary. Most commenters favored the requirement for a site plan but

differed on the level of detail required for the plan. Some commenters favored a simple sketch and others favored an engineering drawing that would locate the tanks and the piping, indicate the sizes and routing of the piping, and indicate the location of structures on the site. Information obtained from the "Causes of Release Study" (see section II.F.2. of today's preamble) indicates that site plans are prepared voluntarily by most major corporations and are required in some jurisdictions when applying for building permits.

The Agency has determined that it will not make site plans a required record because it is not necessary to ensure compliance with the technical requirements promulgated today. A site plan is, however, a useful tool for owners and operators. The Agency notes that site plans are recommended in recent updates of national codes addressed to the installation of new UST systems.

3. Upgrading of Existing Systems (§ 280.21)

EPA proposed in § 280.21(a) that, within 10 years after the effective date of the final rule, all existing UST systems comply with the requirements for new UST systems under § 280.20 and have a field-installed cathodic protection system designed by an independent corrosion expert. If these requirements could not be met, these UST systems would have to be closed. The Agency requested comments on these proposed requirements and the need for upgrading UST systems to prevent releases (see 52 FR 12702–12705).

a. *Mandatory Upgrading Schedule. (1) Overview.* EPA concluded in the proposal (52 FR 12702–12704) that the universe of 1.4 to 2 million existing UST systems presents a significant threat to the public health and environment from product releases due to spills, overfills, and corrosion of unprotected steel tank systems. Presently, the majority of existing UST systems are not equipped with any of the release prevention or detection features that were proposed. The Agency also concluded that if these existing systems were retrofitted with safeguards proposed for new UST systems, a significant number of product releases could be prevented or minimized.

EPA proposed two different schedules for implementing UST system upgrades: One for installation of release prevention (corrosion protection and spill/overfill controls), and another for release detection.

- Corrosion protection (which would consist of cathodic protection for bare steel tanks, for example), and spill and overfill controls were proposed to be installed at all existing UST systems within 10 years (see 52 FR 12774 and 12779).
- Release detection at unprotected and protected existing UST systems was proposed to be phased in at 3 and 5 years, respectively, with monthly release detection monitoring proposed for all UST systems after 10 years.
- UST systems that could not implement a reliable and effective release detection method, or that did not meet upgrade requirements for corrosion protection and spill and overfill controls within the required time frames proposed were to be replaced (to meet new tank standards) or permanently closed.

The proposed implementation schedule for release detection has been changed in the final rule to require existing UST systems to phase in release detection based on age over the first 5 years after the rule's effective date. (Further discussion about the Agency's rationale for changing this proposed requirement is presented in section IV.D.3. of today's preamble.) In today's final rule, the Agency has retained the proposed requirement that all substandard existing UST systems be closed, replaced, or retrofitted with corrosion protection and spill and overfill control equipment within 10 years after the rule's effective date. The final requirements concerning the upgrade of corrosion protection and spill and overfill controls (indicating public comments on this issue) are discussed below. The schedule issues are discussed first, followed by the upgrading methods.

(2) Approaches to Today's Rule. During development of the proposed rule, the Agency considered several approaches and requirements for scheduling upgrade and replacement of existing substandard UST systems, including: rapid upgrade and replacement (e.g., within 3 to 5 years), gradual upgrade and replacement (within 6 to 12 years), and no required upgrade and replacement of existing UST systems. EPA selected the gradual approach, proposing that all existing UST systems storing regulated substances be required to either upgrade to new tank standards within 10 years (through retrofitting or replacement) or be permanently closed.

Many commenters, including several segments of the UST service industry, supported the 10-year upgrade period, believing that this is a reasonable time frame to allow their industry to respond to the large universe of existing tanks that will need to be upgraded, replaced, or closed. As discussed in the preamble to the proposal (52 FR 12704), one important advantage of this approach is that it appears to complement current industry trends towards upgrading or replacing voluntarily, while setting a clear target date by which all upgrades and replacements must be completed. This approach provides flexibility to implementing agencies by allowing them to choose from numerous alternative phase-in approaches (e.g., based on tank age, tank type, or environmental vulnerability of the site) the most appropriate and applicable method to achieve an orderly transition in meeting the 10-year compliance deadline. In summary, both EPA and many commenters believe that the proposed 10-year compliance period will provide time that is adequate to implement the required improvements at the 1.4 to 2 million UST systems nationwide.

Other commenters stated that the 10-year mandatory upgrade period is too ambitious and should be relaxed (or lengthened) for those owners and operators with multiple tanks, with financial limitations, or in states where upgrade/replacement programs have already been implemented. EPA continues to remain unconvinced, however, that extending the proposed compliance period will significantly lessen the burden on multiple tank owners or on owners and operators with limited financial resources because if bare steel tanks are allowed to continue operation after 10 years, many will eventually leak and require corrective action that is much more burdensome than upgrading. EPA also expects that most UST owners and operators will make the decision to upgrade or replace existing UST systems within 10 years anyway (see 52 FR 12671). For example, many owners and operators will choose to conduct their upgrades prior to implementation of release detection (within the first 5 years) because it is more cost effective and practical to implement all required upgrades at a site at the same time, *before* the tank system leaks.

Many owners and operators are currently upgrading or replacing their existing UST systems in response to pressures other than Federal regulatory requirements (for example, voluntary upgrading programs, insurance and liability concerns, and State and local upgrading requirements). For this reason, some commenters suggested that the 10-year mandatory upgrade requirement is unnecessary and should be deleted from the regulations. The Agency agrees that these positive upgrading and replacement trends will

probably continue over the next several years, even without a regulatory requirement. EPA is concerned, however, that reliance only on these voluntary activities, without the added incentive of a regulatory deadline, will result in a significant number of UST systems not being upgraded or replaced over the next 10 years. EPA has concluded that this is a situation that would not protect human health and the environment nationwide.

Some commenters supported a phase-in period that is more rapid than the proposed 10 years because the longer it takes to upgrade, the more releases to the environment that will occur, posing additional risk to the public health and environment. More than half of all existing UST systems are over 10 years old and constructed of unprotected, bare steel without any spill and overfill prevention equipment. EPA's information on causes of release (see earlier discussion on causes of release) confirms that these tank systems are the most likely to have releases due to corrosion, piping failures, and spills and overfills. Therefore, the Agency recognizes that a more rapid upgrade schedule will, at least theoretically, prevent a significant number of release incidences that may occur at existing substandard UST systems.

Other information obtained by the Agency during development of the proposal (see 52 FR 12704), however, indicated that not even the most aggressive State, local, or industry UST programs have required upgrading or replacement in as short a timeframe as 3 to 5 years because it is universally accepted as unimplementable given the nature and size of the regulated community. The Agency believes that a mandatory, rapid upgrading approach could not be successfully implemented because a large portion of the regulated community consists of small businesses that, if faced with a shorter deadline, would continue their substandard operations resulting in widespread noncompliance. Thus, while a shorter upgrade period appears theoretically advantageous in terms of the environmental and health risks avoided, EPA has concluded that it is unlikely to genuinely achieve more protection of the public health and environment than the proposed approach because it is unimplementable by significant portions of this regulated community.

Many commenters (those supporting the proposed 10-year mandatory upgrade period, as well as the other approaches) recommended that UST system upgrades and replacements be phased in using a staggered approach over the upgrading period. They believe that this would lessen the burden on the UST service industry by preventing numerous owners from waiting until the end of the 10-year compliance period to complete their upgrades or replacements. Tank age was the factor most frequently suggested as the basis for phase-in of UST system upgrades because of the belief that older UST systems have the greatest probability of leaking due to corrosion. Others suggested that the corrosive nature of a site, the presence or absence of corrosion protection, or the environmental vulnerability of an area should be used as the basis for determining the upgrade schedule.

Given the enormous size of the existing UST system universe and the practical implementation difficulties that owners and operators face as they upgrade necessary improvements to prevent future releases, EPA agrees that the implementation of the upgrade/replacement requirements should be phased in. The Agency decided, however, not to require the phase-in of UST system upgrades or replacements based on tank age or any other factor in the final rule for several reasons. First, EPA believes that numerous UST systems will be upgraded or closed over the next 10 years even in the absence of any Federal deadline in the regulations. Upgrading programs are already well underway in numerous companies, and more are expected to begin nationwide in response to these regulations. As discussed earlier in the background section of this preamble, numerous system closures will also occur because of this new regulatory program. Thus, EPA has concluded that only a portion of the existing UST system owners and operators are likely to wait until the end of 10-year compliance period to complete their upgrades or replacements. Second, upgrading or replacement represents a significant undertaking for UST system owners and operators and the Agency has identified many appropriate factors (including, for example, tank age, site location, and other business-related reasons) already being successfully used by owners and operators to schedule replacements/upgrades. In an attempt to stimulate scheduled actions and company programs in this area, the Agency does not want to artificially restrict them to phase-in programs based on age. Third, the Agency has concluded that a simple deadline provides a clear national goal, and that this is all that is necessary to prompt the required upgrading/replacement actions over the 10-year period. Finally, today's approach of a 10-year deadline provides implementing agencies with the freedom to decide whether State or local UST programs should have a scheduled phase-in period and, if so, the methods they will use to do it.

Finally, some commenters recommended that EPA provide variance procedures in the final rule that would enable the avoidance (or delay) of implementation of the upgrading requirements for owners and operators who show reasonable progress in upgrading, for those lacking financial resources to upgrade, for protected tanks installed prior to final rule promulgation, and for States where UST upgrade programs have already been implemented. The use of such variances in the final rule was rejected, however, because the Agency believes that where upgrading has been allowed to be phased in over 10 years, there is no justification for further delay in bringing substandard systems into compliance with requirements necessary to ensure protection of human health and the environment.

b. *Tank Upgrading Methods for Corrosion Protection (§ 280.21(b)).* Today's final rule allows three methods of tank upgrading for corrosion protection, as suggested by a number of commenters. EPA believes that each of the upgrading methods described below has been demonstrated to be protective of human health and the environment.

(1) Interior Lining. The first of the options for upgrading a tank is to internally line the tank in accordance with the tank repair provisions of § 280.33. To use this technique as the sole method for meeting the corrosion protection upgrade, the tank must be internally inspected after 10 years and every 5 years thereafter. The inspection must be conducted in accordance with a code of practice developed by a nationally recognized association or independent testing lab to ensure that the lined tank is performing adequately. Interior lining used as the sole method for corrosion protection is not regarded as a permanent upgrade, but is adequate if it continues to meet original lining design specifications as determined by periodic inspections. If the lined tank does not meet the original design specifications, it no longer meets the upgrading requirements and, if it cannot be repaired in accordance with industry codes, it is subject to the unprotected tank requirements and must be replaced after 1998.

Numerous comments were received suggesting that the use of internal tank lining of existing UST systems should be more clearly allowed as an upgrade

option. Data submitted by the commenters and data developed by EPA since proposal indicate that lined tanks rarely cause releases to the environment, even in the absence of external corrosion protection measures. Tank lining has been reported by lining companies as already having been used to repair or prevent releases in over 300,000 heating oil tanks and over 70,000 motor fuel tanks during the last 25 years. Last year, an EPA-sponsored study of UST programs outside the U.S. revealed that internal lining of tanks has been in wide use in Europe and Canada for the past decade. At least one major insurer of USTs in the U.S. requires that unprotected steel tanks over 15 years of age be lined as a preventive measure for internal corrosion.

Several experienced tank operators commented that if steel tanks are properly lined their life can be extended for at least 10 years with leak-free performance. They noted significant economic and operational advantages to lining alone as an upgrade (e.g., it avoids the need to reinstall the tank and can be done relatively quickly), and they suggested that EPA allow tank lining as an upgrade option. EPA now believes that either tank lining alone or tank lining combined with external cathodic protection is a reliable upgrade measure. Accordingly, the final rule has been revised to more clearly indicate that these are acceptable upgrade options under specific guidelines and requirements.

EPA also agrees with commenters that internal corrosion is a potential problem for tanks in the future but does not believe enough evidence is available to suggest that requiring tank lining for all steel tanks is warranted at this time. Although commenters submitted data that demonstrated the existence of internal corrosion, there were conflicting views as to its frequency and causes and the severity of its effects. Some commenters stated that all tanks more than 15 years old should be lined because of the potential for failures due to internal corrosion. Other commenters stated that modern fuels and tank management practices have virtually eliminated internal corrosion.

As previously addressed in the discussion of internal corrosion under the new tank standards (section IV.B.1.d.), EPA believes that most internal corrosion incidents have been due to dip-sticking tanks without striker plates. Now that striker plates are standard equipment on tanks, the problem of internal corrosion for newer tanks has been substantially resolved. In the final rules, tanks over 10 years of age must be either internally inspected or lined to meet the upgrade requirements. If internal corrosion is occurring, the internal inspection will detect it. The lining codes require the installation of striker plates. Although EPA will continue to study this potential problem in the coming years, the final rule does not require internal corrosion protection practices beyond what is now contained in industry codes.

(2) Cathodic Protection. A second option for upgrading a tank is cathodic protection. Section 280.21(b)(2) describes requirements for upgrading an existing UST by cathodic protection. The cathodic protection system must meet the requirements for new tank systems, except that the tank and piping do not need to have an external dielectric coating. These cathodic protection requirements for existing USTs were included in the proposal and were supported by the commenters. Several commenters, however, expressed concern that not all existing USTs are sound enough to be upgraded.

Concern was expressed over allowing cathodic protection retrofits on old tanks that could have one of the following: Plugged corrosion holes (see new causes of release information in section II.F.2. of this preamble); severe external pitting corrosion that leaves a lower margin of safety in the event that the cathodic protection system fails; and internal corrosion. The Agency agrees with these commenters that only sound tanks should be upgraded with cathodic protection and is including inspection and testing requirements for upgraded tanks in the final rule. Review of industry standards for internal inspection to assess the need for repair of USTs has convinced EPA that tanks can be safely upgraded if these industry standards are followed.

There are three ways to ensure that tanks are safely and correctly upgraded with cathodic protection. First, tank tightness testing may be used to judge the structural integrity of newer tanks that are upgraded with cathodic protection, because EPA has concluded that newer tanks are much less likely to have corrosion holes than older tanks. This option for tank tightness testing may be used only on tanks under 10 years of age. EPA concluded in "Causes of Release from UST Systems" that corrosion breakthrough is unlikely in unprotected tanks under 10 years of age. For example, in one study less than 2 percent of tanks tested which were under 11 years of age were found to be leaking. Tightness testing will, therefore, adequately identify the few younger tanks that may be currently leaking or have corrosion holes. However, the younger tanks must be tightness tested *twice*. The first tightness test must be performed before the installation of cathodic protection to ensure that the tank is not currently leaking. The second tightness test must be performed between 3 and 6 months after the initiation of cathodic protection to ensure that the cathodic protection has not opened any holes that were previously plugged with corrosion products. Information obtained from EPA-sponsored expert panels and public comments indicated that corrosion holes often do not leak because the corrosion byproducts plug the holes. This information also indicated that cathodic protection can cause these "rust plugs" to loosen and begin leaking soon after the protection is applied. Although EPA does not have data on how often this loosening occurs, this phenomenon appears to have occurred in a few cases when cathodic protection was applied to gas pipelines. EPA believes that performing a second tank tightness test 3 to 6 months after cathodic protection is applied will usually detect this type of leak before significant releases occur.

A second way to ensure this type of upgrading is successful is to use monthly monitoring. Like the tightness testing option, this method may be used only on tanks under 10 years of age. EPA believes that very few tanks under 10 years of age will leak after cathodic protection has been installed. The Agency believes, however, that some method of assessment is needed to protect human health and the environment in the unlikely event that an unsound tank is retrofitted with cathodic protection. As discussed in section III.D. of this preamble, monthly release detection provides highly reliable indications of tank integrity.

A third method applies to older tanks. For tanks 10 years of age and older, these two methods above (either a pair of tank tightness tests or monthly release detection monitoring) are inadequate to ensure structural soundness before the cathodic protection system is installed. These older tanks must instead be internally inspected and assessed. As described above, unprotected tanks often corrode through but do not leak because the corrosion product, backfill, and interior sludge seal the hole. EPA concluded in "Causes of Release from UST Systems" that about 50 percent of the corrosion holes in tanks are plugged and do not leak. The study also showed that approximately 7 percent of the tanks of 12 to 15 years of age leaked. EPA has concluded from these data that as many

as 7 percent of existing USTs are corroded through, but not leaking. Many more existing tanks may be heavily corroded and not suitable for cathodic protection alone as an upgrading measure.

EPA understands that several firms that offer cathodic protection upgrade services use other methods to ensure that the tank is structurally sound before this upgrade option is recommended. These procedures appear to vary somewhat from firm to firm. One component of the approach commonly involves a statistical analysis of the likelihood of the tank having corrosion holes based upon the characteristics of the site soils and the age of the tank. The database for this analysis varies, but usually contains large numbers of tank failures from Canada and the United States.

This approach appears to have merit, but it is not included explicitly in the final rule because its effectiveness was not fully demonstrated. The Agency was unable to evaluate its effectiveness for two reasons. First, EPA does not have long-term performance data for a large number of tanks that have been assessed in this way prior to upgrading. Second, these practices vary from firm to firm and are not established in an industry consensus code. Such options for assessment may be used, however, where they have been determined by the implementing agency to prevent releases in a manner that is no less protective of human health and the environment than internal inspection or tightness testing.

EPA proposed that the cathodic protection system for upgraded tanks be designed by an independent corrosion expert. Commenters opposed to the requirement that the corrosion expert be independent were concerned that this was precluding the use of in-house personnel. The issue of independence is discussed earlier in this preamble in relation to the design of field-installed cathodic protection systems for new tank systems (section IV.B.1.). EPA agrees with these commenters that companies should be able to use their own qualified or trained employees. Accordingly, EPA has dropped the requirement that the corrosion expert be "independent."

Commenters also suggested that, because the proposed rule required that a corrosion expert design the retrofit cathodic protection system, the final rule should not dictate a particular cathodic protection system design. EPA agrees with these commenters and has decided not to require a specific retrofit cathodic protection method in the final rule provided that a corrosion expert determines the appropriate method based on the conditions at the site.

(3) Cathodic Protection and Internal Lining. A third option is to both line and cathodically protect the tank. The lining is intended to provide protection from internal corrosion; the cathodic protection prevents exterior corrosion. Because internal corrosion rarely occurs above the bottom third of the tank, a full lining may not be required if an internal inspection shows a sound tank exterior. The cathodic protection system must meet the same requirements as the new tank cathodic protection system except for dielectric coatings. The lining must be installed in accordance with the requirements of § 280.33.

c. *Upgrading Piping (§ 280.21(c)).* Upgrading of an UST system requires upgrading the system's piping as well. Metal piping must be upgraded in accordance with the requirements for new piping, except that a dielectric coating is not required if the existing piping is not upgraded by replacement. Pipe lining is a developing technology that may eventually become a viable option for upgrading some types of steel pipes; however, the technology requires more development and testing to prove its effectiveness for use on small-diameter pipes and thus is not an option for upgrading in the final rule.

d. *Tank Upgrading Methods for Spill and Overfill Control (§ 280.21(d)).* To prevent spills and overfills associated with product transfer to the UST system, all existing UST systems must comply with the requirements for new UST system spill and overfill prevention equipment, as specified in § 280.20(c). These additional requirements are discussed below in section IV.C.1.

4. Notification (§ 280.22)

Section 280.22 of the proposed rule included notification requirements for new and existing UST systems. These requirements are substantially the same in today's final rule. Sections 280.22 (a), (b), and (g) have been deleted because their effective dates have passed. Section VII of the notification form (certification of compliance) has been revised to reflect changed language in the installation, release detection, and corrosion protection requirements. The five tank columns on this section of the notification form have been deleted to simplify the form. EPA believes that the same installation assurance, release detection, corrosion protection and financial responsibility measures will usually be used at all of the new tank systems at any one location. Any sites where different measures are used for each tank can be certified with copies of this form.

C. General Operating Requirements

1. Spill and Overfill Prevention and Control (§§ 280.20 and 280.30)

a. *Introduction.* The surface spills and overfills that occur at UST systems are usually the result of human error, not equipment failure. There are two major types of surface releases: (1) Spilling, which results from improper dispensing practices such as disconnecting the delivery hose from the tank's fill pipe before the hose has drained completely, and (2) overfilling, which occurs when the tank liquid level exceeds tank capacity and product escapes through tank bung holes, vent lines, or fill ports. Spills and overfills occur on a relatively frequent basis; however, they are usually not reported because they are typically small in volume—less than 25 gallons—and can be easily contained and cleaned up.

Basically, the proposal required owners and operators to follow procedures and provide equipment to prevent these releases or to immediately contain and clean them up. In the proposed rule, proper transfer procedures had to be followed during all deliveries. For new UST systems, the Agency proposed the installation of alarms in conjunction with liquid level sensors, automatic shutoff devices that halt further delivery of product into the UST at a predetermined level, or the installation of catchment basins to contain overfills or spills (e.g., product left in delivery hoses at the time of disconnect). EPA also proposed requiring the immediate installation of spill and overfill equipment on any UST system that used external leak detection devices. Existing UST systems not using external leak detection devices were allowed up to 10 years to come into compliance with the proposed requirements for spill and overfill equipment.

In the Agency's study of the causes of releases from UST systems completed since proposal, many people contacted and interviewed in the field ranked spills and overfills as the most frequent cause of release rather than the distant third identified in the preamble to the proposal (52 FR 12667). For example, spills and overfills are reported in Dade County, Florida, to be the leading cause of release from UST systems. Experienced installation contractors reported that they repeatedly and frequently observe various indicators of spill and overfill problems, such as discolored soil above and around the tank and the dissolving of the tank's bituminous coating below the drop tube connection to the tank fill opening. Field

observations also implicated nonoperational components such as bung hole plugs and vent lines as a frequent cause of release in overfills. In addition, most experienced hands in the field felt that spills and overfills were two separate problems that must be addressed separately.

Based upon public comments and new findings on causes of product release, the Agency has made several changes in today's final rule for spills and overfills: The rule has been reorganized to address apparent confusion voiced by commenters concerning the presentation of requirements for new and existing USTs; an exemption from equipment requirements is provided for UST systems filled with small volume delivery of no more than 25 gallons; and the physical presence of an attendant is not required during the filling of the UST system as long as the transfer operation is otherwise monitored by mechanical or electronic means. Although EPA recognizes that the owner and operator may, through private agreement, ensure that ultimate responsibility for the exercise of proper delivery techniques is borne by the transport carrier, the final rule still holds the owner and operator responsible for preventing damages to human health and the environment due to spills because the Agency does not have jurisdiction over transport carriers.

The specific spill and overfill equipment requirements of the final rule are discussed below. These requirements apply to all new UST systems as of the effective date of this rulemaking, and existing UST systems must meet the requirements within 10 years of that effective date (see section IV.C.1.e. below). In addition, general operating procedures for spill and overfill control are applicable to both new and existing UST systems as of the effective date of the rule (see section IV.C.1.f. below).

b. *Spill Prevention (§ 280.20(c)(1)(i)).* The Agency has concluded that repeated spills can frequently cause significant environmental damage. Although most surface spills are small in volume, because they are often repeated they can eventually contaminate soil and ground water. Thus, the final rule requires use of spill prevention equipment (such as a small catchment basin around the fill port) at all new and existing UST systems. Catchment basins are the most prevalent form of spill prevention used today.

The proposed rule specified that when catchment basins were used they would be large enough to contain the volume of the hose. In response, several commenters objected to EPA relying on this larger sized catchment basin technology because of concerns about the potential fire or explosion hazard resulting from the buildup of petroleum fumes in the catchment basin area, the cracking of catchment basins due to freezing of accumulated water, or the potential that these containment devices would provide the deliverer with a false sense of security that would prompt carelessness during delivery. However, no commenters provided any data to EPA that indicated the occurrence of any fires or explosions due to vaporization of product in a basin, regardless of its size. In any event, EPA believes that compliance with the proper transfer procedures required in § 280.30(a) will prevent fuel from frequently collecting in the basins, and normal maintenance suggested by the equipment manufacturer will prevent water from accumulating and freezing. Several commenters said that small spill catchment basins are preferred in many circumstances. They also said that if overfill prevention equipment is also used, the problem of emptying a full transfer hose should rarely be encountered. Overfill prevention devices currently available in the United States either allow the transfer hose to drain at a very slow rate into the tank or can be manually overridden to empty the hose contents into the tank. As a consequence, today's final rule deletes the proposed size specification for spill catchment basins, thus leaving the determination of the appropriate volume to the discretion of the owner and operator. The design or size of the catchment basin (combined with the type of overfill prevention equipment also being required today) should be of sufficient size to contain spills and prevent releases to the environment. For example, if the catchment basin has a means for releasing its contents into the tank or another containment structure in order to provide more room in the catchment basin, a smaller volume catchment basin (e.g., the standard 5-gallon size) should be adequate equipment for preventing spills. Catchment basins without any means for drainage and requiring manual unloading may need to be of larger volume.

For those concerned that the use of catchment basins of any size or type may present a safety hazard, EPA allows use of alternative devices to prevent spills if they are approved by the implementing agency as preventing spills in a manner that is no less stringent in protecting human health and the environment. For example, a device that would prevent release from the transfer hose when detached from the fill pipe, such as a dry disconnect coupling, could satisfy this requirement. This provision is intended to provide flexibility in a rapidly developing technological area that will allow continued development of new and improved spill prevention equipment.

c. *Overfill Prevention (§ 280.20(c)(1)(ii)).* Agency data show that overfill prevention is also very important, not just for the prevention of large overfills released from the top of vent or fill lines, but also overfills that slowly leak out from the fittings at the top of the overfilled tank, such as the bung connections. In today's final rule, therefore, all new UST systems are also required to use overfill prevention equipment.

All new UST systems must be equipped with overfill protection by installing one or more of the following:

- A device that will alert the transfer operator when the tank is no more than 90 percent full by restricting the flow into the tank or triggering a high-level alarm;
- A device that will automatically shut off flow into the tank when the tank is no more than 95 percent full; or
- An equivalent device approved by the implementing agency.

These alternatives are essentially the same as those presented in the proposed rule except for the clarification that flow restrictors (i.e., ball float valves) are also allowed. Although not specifically mentioned in the proposed rule, several commenters felt that flow restrictors were adequate for spill and overfill prevention and are the most widely used method at present. Flow restrictors do not shut off inflow completely but instead significantly reduce the rate at which product enters the tank. The transporter can tell when the flow is reduced and stop delivery. Some commenters emphasized that many USTs are already using flow restrictors successfully. Upon review of these devices, the Agency has concluded that the flow restrictors are protective of human health and the environment, particularly if they are coupled with the requirement of § 280.30 that all transfers be closely monitored. The final rule allows the use of flow restrictors for overfill prevention.

EPA is concerned, however, that this type of overfill prevention may jeopardize the integrity of the tank if a pressurized product delivery system is used. Pressurized transfer of up to 30 psi is sometimes used with heavier fuels. Most tanks can safely withstand pressures of only 5 psi, and flow restrictors may allow a much higher pressure to develop during pressurized delivery, causing tanks to rupture. The

Agency has no information to indicate that such failures are common. Almost all of the UST systems addressed in today's rule are not filled by pressurized delivery. The delivery hose connection for this type of delivery usually includes a back-pressure sensor that automatically disconnects the hose if pressure develops in the tank.

EPA has decided that if an owner and operator uses either a high-level alarm or a flow restrictor, the devices must be activated at 90 percent of tank capacity. In the proposal, the high-level alarms were required to be activated at 95 percent of tank capacity. EPA has decided on the stricter standard for both of these devices because neither device is a total shutoff device. Also, both devices are subject to the operator's response to terminate the transfer.

Automatic shutoff devices do not require operator action to prevent overfills. Automatic shutoff devices prevent overfilling by automatically shutting off flow at the fill pipe before the tank fills up to the top. Already in widespread use in Europe, this approach is designed to completely eliminate overfills due to human error. The Agency believes this is the simplest type of overfill device for new and existing UST systems installing overfill prevention equipment. Inexpensive shutoff devices that are easy to install have recently become available to the U.S. market, with the potential for additional innovative technology to enter the market soon. Those who wish to use an overfill prevention device other than those mentioned in the rule may satisfy the overfill prevention requirement with use of alternative devices approved by the implementing agency as being no less stringent in protecting human health and the environment.

d. *Exemptions (§ 280.20(c)(2)).* Several commenters pointed out that infrequently filled UST systems pose less risk of releases from spilling and overfilling than systems filled on a more regular basis and, therefore, should be exempt from spill and overfill prevention equipment requirements. Other commenters suggested that UST systems filled manually in small increments, such as most used oil tanks, pose significantly less risk than those receiving large-volume deliveries.

The Agency is continuing to require spill and overfill prevention equipment on infrequently filled tanks in the final rule. Though a tank may be filled only occasionally, it is the potential size of overfills that concerns EPA. Although infrequent filling reduces the likelihood of a spill or an overfill release somewhat, it does not guarantee that a spill or an overfill that does occur would be of small quantity. In addition, EPA feels that in the future, as today's requirements are implemented, carriers of product may become accustomed to (and dependent on) devices such as high-level alarms or shutoff devices and would, therefore, be less attentive during product delivery due to reliance on prevention equipment to indicate completion of the delivery. Finally, the implementing agency would often be unable to determine the actual filling frequency for purposes of determining whether a particular UST system should be exempt from spill and overfill requirements, creating compliance monitoring difficulties. Consequently, the Agency has retained the required use of spill and overfill prevention equipment for infrequently filled tanks.

The final rule does not, however, require new UST systems filled through transfers of no more than 25 gallons to use spill or overfill prevention equipment (§ 280.20). The 25-gallon limit was selected because the Agency understands it is a common industry practice at automotive service centers to use containers up to this volume for handling used oil prior to putting it into the UST. EPA has concluded that the likelihood of overfilling the tank is small because the volume of the transfer is much smaller than the volume of the tank. In addition, the maximum size of the spill or overfill that could occur from a 25 gallon transfer is 25 gallons. This quantity is easier to contain and clean up than the maximum size spill or overfill that could occur from a transfer of several thousand gallons. EPA has concluded that proper operating practices and procedures (required under § 280.30), such as checking the available tank volume before each transfer, will adequately protect human health and the environment.

e. *Compliance Schedule for Initial Spill and Overfill Equipment (§§ 280.20 and 280.21).* In the proposal, the schedule for compliance required use of spill and overfill prevention equipment at the time of installation of all new UST systems. All existing UST systems must be upgraded within 10 years of the effective date of the final regulations. EPA has retained this 10-year requirement as an adequate period of time to retrofit existing UST systems.

EPA has deleted the proposed requirement to partially phase in the use of spill and overfill equipment whenever any external method of detection is installed at an existing tank. Some commenters expressed confusion about when such equipment would have to be retrofitted to tanks that already have installed external monitoring methods. EPA agrees that mandating this phase-in approach does present such implementation problems and unnecessarily hinders owner and operator flexibility in selecting their own schedule for compliance within the 10-year deadline. This proposed approach could unduly discourage the use of external methods of detection. Furthermore, research completed by EPA after proposal (and made available for public comment on March 31, 1988) has convinced the Agency that spills and overfills do not pose insurmountable problems to the use of external methods of detection that require the immediate retrofit of spill and overfill equipment.

As suggested by commenters, EPA considered requiring retrofitting spill and overfill prevention devices earlier, for example, at the time of installation of all release detection equipment or during a scheduled general system upgrade. The Agency decided against such earlier deadlines primarily due to the implementation difficulties this would pose. EPA believes that the limited population of installers precludes the rapid installation of spill and overfill controls at all of the UST sites nationwide. Although EPA has decided to retain the 10-year time period, the Agency expects that many tank owners and operators will retrofit these devices in less than 10 years even though it is not mandatory to do so. In many cases, retrofit of spill and overfill equipment at the time of release detection retrofit or of corrosion protection upgrading will be more cost effective. Finally, the less stringent release detection requirements that are allowed in today's final rules for fully upgraded tanks will actually provide an incentive to initiate earlier retrofitting to meet spill and overfill prevention requirements. The discussion of release detection requirements for upgraded tanks is provided in section V.D. of today's preamble.

f. *General Operating Procedures for Spill and Overfill Control (§ 280.30).* In addition to installation of release prevention equipment, the Agency has retained in the final rule the general operating procedures for both new and existing UST systems that were proposed to prevent spills and overfills.

Proposed § 280.30(a) stated that the owner and operator must ensure that releases do not occur and must be physically present to observe the transfer of product. Many commenters suggested that the driver of the delivery vehicle should be held responsible for any releases during delivery, and that having someone physically present who

represents the owner and operator during all deliveries is impractical and costly. Although EPA agrees that responsible carriers are the primary agents in the field to prevent spills and overfills, for the purpose of complying with today's requirements, the UST system owner and operator is responsible for preventing spills and overfills. The Agency must take this approach because it has no legal authority to regulate transporters under Subtitle I. Thus, regardless of whether the owner and operator decides to share (by contract) responsibility for the monitoring of the transfer with the carrier, under today's final regulations the owner and operator will continue to be responsible in the event that there is a release during delivery. See section IV.E.2.d. of the preamble and § 280.53 of the final rule for the requirements of owners and operators in the event of a spill or overfill.

The proposed rule required that a person be physically present at all times during the transfer of product to be able to respond quickly to a spill or overfill (proposed § 280.30). Some commenters suggested, however, that many UST systems are in large tank farms where it would not be feasible or economical (especially during multiple filling operations) to have someone present at each tank during the time it was being filled. In response to these suggestions, EPA is changing this requirement in the final rule to simply require that all deliveries be monitored constantly. This change allows for a person at the site (but not necessarily at the transfer point) to monitor a transfer using remote sensing equipment that can prevent a spill or an overfill from occurring. This change will continue to meet the intent of the proposed requirement, that delivery be monitored, and will also accommodate operations encountered at large tank farms where it is difficult for a person to be at every tank. Many of these installations have central monitoring stations where all the tanks can be supervised through remote control monitoring and shutoff equipment.

2. Operation and Maintenance of Corrosion Protection (§ 280.31)

As discussed in the preamble to the April 17 proposal (52 FR 12666–12667), corrosion was found to be one of the common causes of release in existing underground tank and piping systems that are unprotected from corrosion. The consensus of experts in the field contacted by EPA indicates that the installation and proper operation and maintenance of corrosion protection systems can significantly reduce the incidence or volume of release due to corrosion. Officials in Ontario, Canada, Denmark, and Sweden have cited the success of such corrosion protection programs initiated in their respective countries during the early to mid-1970s. The proposed rule addressed operation and maintenance of corrosion protection systems in § 280.31 (see preamble discussion in 52 FR 12707).

a. *Extent of Corrosion Protection (§ 280.31(a)).* EPA proposed in § 280.31(a) that all corrosion protection systems must be operated and maintained to continuously provide corrosion protection to buried metal components of the UST system. Public comments on proposed § 280.31 supported the necessity of routine maintenance of the corrosion protection systems by qualified field personnel.

The Agency also invited comments on which components, if any, should be cathodically protected; whether there are noncorrodible metal alternatives for that component; and what form of corrosion protection is appropriate if cathodic protection is not required (52 FR 12707). Many comments were received in this area. In summary, some commenters suggested that all corrosion-protected metal components of UST systems, including swing joints, flexible connectors, and riser connections, should be monitored regularly. Other commenters suggested that some components, such as bung plugs and the pump housing, do not need cathodic protection and maintenance. (As discussed in more detail earlier in this preamble in the section on new piping design and construction requirements (section IV.B.1.b.(2).) In the final rule, EPA requires protection of delivery piping and that portion of the tank routinely storing regulated substances. Requirements for spill and overfill equipment and practices will prevent releases from the top of the tank and vent piping.

EPA agrees with commenters who found it unnecessary to require protection for portions of the system that would not regularly contain product or are not in contact with the soil, even if situated underground. Bung plugs are inserted into unused openings at the top of a tank and are not subject to releases except in the event of overfills. Delivery piping is defined as that portion of the UST system piping through which product is introduced into the tank or delivered from the tank. Cathodic protection is not required for the fill pipes of tanks that have a drop tube because the drop tube is the part of the tank that routinely contains product. The drop tube is not in contact with the soil and thus does not require cathodic protection. Vent piping is not used for delivery of product and presents a minimum risk for release to the environment. In fact, vent piping would be a potential release source only in the event of overfill conditions. The release potential from bung plugs and vent piping will be eliminated or substantially reduced by the requirements for overfill prevention equipment required in § 280.30 of today's rule and, therefore, the Agency has not required their cathodic protection in today's rule.

Pump housings, when contained in the equipment manway at the top of a tank, do not come in contact with the soil and thus do not require cathodic protection. Other pump housings are often isolated from the soil by being submersed in the product in the tank or situated in the dispenser housing above grade and, therefore, do not require cathodic protection. Only those pump housings that are in contact with the ground and potentially contain product require cathodic protection.

b. *Qualifications for Corrosion Personnel (§ 280.31(b)).* EPA proposed in § 280.31(b) that all cathodic protection systems be inspected and designed by an "independent" corrosion expert. Most of the comments received by EPA in this area strongly opposed the requirement of an "independent" corrosion expert. EPA agrees that the proposed requirement for the independence of the expert is not needed and has deleted this term from the final rule. (See section IV.B.1.a.(2) above for a discussion of this issue.)

Other commenters pointed out that the maintenance, operation, and inspection of an installed cathodic protection system could be performed by people who have much less training than a corrosion expert. EPA agrees with these comments, recognizing that most of these inspections are now being conducted by trained specialists. Thus, EPA has replaced the term "independent corrosion expert" with "qualified cathodic protection tester" in the final rule. Cathodic protection testers must be able to demonstrate education and experience in the measurement of cathodic protection of buried or submerged metal piping systems and metal tanks. A definition to this effect has been added to the final rule. The National Association of Corrosion Engineers (NACE) has developed an examination that can be used to ensure that cathodic protection testers are qualified.

c. *Inspection Schedule (§§ 280.31 (b) and (c)).* EPA proposed a minimum

inspection schedule for cathodic protection systems in § 280.31(b). For field-installed cathodic protection systems, the proposal required that the system be tested within 6 months of installation and at least annually thereafter. For factory-installed cathodic protection systems, it was proposed that each system should be tested within 6 months of installation and at least every 5 years thereafter. For all impressed current systems, the proposed requirement was inspection and/or testing as appropriate, and at least annually. The Agency invited comments on the advantages and disadvantages of allowing less frequent inspections/testings for those tanks that are equipped with premanufactured corrosion protection (52 FR 12707).

Several comments were received in these areas. Some commenters felt that the proposed testing requirements for field installation were excessive and that there is no technical reason to differentiate between field- and factory-installed systems. After consultation with groups of industry experts during the public comment period, EPA now agrees with the commenters who recommended that all cathodic protection systems should be tested at the same frequency and the Agency is now requiring in the final rule that all cathodic protection systems be tested within 6 months of installation and at least every 3 years thereafter. These intervals are sufficient to detect any damage or failure of the system and to take remedial action in time to prevent structural failures due to corrosion. EPA understands that this time interval is consistent with sound practice as is now recommended in the recently revised NACE code and by major tank manufacturers.

EPA proposed in § 280.31(c) that all UST systems with impressed current cathodic protection systems must be inspected every 60 days to ensure that the equipment is running properly. This equipment inspection is required in addition to the testing of the cathodic protection. EPA has received many comments on this section. Several commenters supported the proposed approach, with some further suggesting that impressed current systems must be inspected six times a year with intervals not exceeding 75 days. Some commenters suggested monthly inspection of all systems while others suggested immediate testing after installation for all impressed current systems and annually thereafter. No commenters stated that periodic testing of an impressed current system should not be required.

EPA agrees with the commenters who said that inspection at 60-day intervals is protective of human health and the environment because loss of power to the anodes for 60 days is very unlikely to result in corrosion failure. Thus, the proposed inspection approach has been retained in the final rule. This inspection is conducted to simply ensure that the equipment is running properly and is relatively straightforward for most impressed current systems. Most of these systems include a light on the control panel that indicates proper operation. No special training is required to perform this inspection.

d. *Recordkeeping (§ 280.31(d)).* EPA proposed in § 280.31(d) that records documenting the proper operation of corrosion protection systems must be maintained. EPA requested comments on this proposed requirement, and none were received. The Agency has made slight changes in the wording of this requirement to make the intent of the final requirement clear. This minor change does not change the substance of the proposed requirement. The records that are maintained must provide the results of testing from the last two service checks required in § 280.31(b) (which must be performed by a corrosion protection tester) and the last three inspections required under § 280.31(c) (which can be performed by the owner and operator). EPA believes that this record will provide sufficient information to demonstrate that the proper operation and maintenance of the cathodic protection system is being carried out.

e. *General Performance Standards for Testing.* Section 280.31(e) also proposed three criteria to be used while testing cathodic protection systems. EPA received several comments regarding this approach, with most of them suggesting that EPA should include all of the five criteria as defined in NACE RP-02-85. Based on the suggestions of these commenters, EPA now believes that industry codes, such as NACE RP-02-85 and API's "Guide for Inspection of Refinery Equipment," developed by nationally recognized associations provide clearer and more complete guidance about the use of these criteria to determine the adequacy of cathodic protection. These criteria are also better explained in technical documents such as these industry codes. In addition, these criteria are subject to continued review and can be revised to reflect new measurement techniques that result from increased understanding of corrosion phenomena.

Accordingly, § 280.31(e) has been deleted, and there is no explicit listing of the three criteria from the proposed rule. The proposed criteria have been replaced with a more general performance standard (in § 280.31(b)) that requires the service checks be performed in accordance with a nationally accepted code of practice. This approach accommodates the concerns of the commenters who recommended that all five of the NACE criteria should be allowed to be considered. At the same time, this approach encourages the application of the proper standard because these national codes are presented within the context of significant technical guidance as to the proper use of each criteria. Thus, in the final rule, owners and operators are being held to the use of at least these criteria as recommended in these national codes.

f. *Notification Requirement.* EPA proposed in § 280.31(f) that owners and operators of new UST systems must certify compliance with the corrosion protection requirements on the notification form submitted pursuant to § 280.22. No comments were received by EPA on this requirement. In the final rule, this section has been moved for clarity to § 280.22(e), which identifies notification requirements.

3. Inspection and Maintenance of the Tank System (§ 280.31)

In the preamble to the proposed regulation, the Agency discussed three alternatives for the required maintenance and inspection of the tank system (52 FR 12707). EPA proposed requirements for the maintenance and inspection of corrosion protection systems and requested comments and information on the need for broader requirements. Two alternatives were described that addressed the maintenance and inspection of the entire site or other tank system equipment in addition to the corrosion protection system.

a. *Site or System Inspections.* Many comments were received by EPA on these alternative inspection requirements. Some commenters felt that inspection of the entire site or of the tank system is of little practical benefit and unnecessary because such an inspection alternative would be duplicative of the leak detection requirements. One commenter suggested conducting inspections of the entire UST site.

EPA agrees with commenters who stated that site inspection is duplicative of leak detection. Institution of release detection systems should provide effective warning of releases from most of the components of the tank system,

thereby eliminating the need to require the general inspections. Also, the majority of USTs are completely underground and inaccessible to inspection, rendering total system inspection impractical.

b. *Inspections for Tank Deflection.* Small distortions of the tank diameter are expected at the installation of USTs, and the tanks are designed with an allowance to withstand them. Improper backfill or failure to install foundation anchors (or failure of the anchoring system) can lead, however, to excessive distortion resulting in rupture of the tank. One way to verify this distortion is by measuring tank deflection (variation from true diameter). EPA had requested comments on periodic tank deflection measurements for steel or FRP tanks as a means of preventing tank failures. Many comments were received by EPA on this inspection method. Some requested EPA to mandate periodic deflection monitoring for FRP tanks in the final rule. Others stated the view that FRP tanks do not require periodic deflection monitoring because virtually all deflection ceases after the first year. Some also recommended vertical diameter measurements for all new tanks to verify initial installation results.

The Agency disagrees with commenters who suggested periodic tank deflection monitoring for FRP tanks. The low incidence of failure in FRP tanks (less than 0.5 percent), which has been declining substantially over the last 10 years, argues against the need for periodic deflection measurements. The Agency has, therefore, chosen not to mandate periodic deflection measurement in the final rule. The Agency believes that excessive deflection in FRP tanks is usually due to improper installation and occurs soon after the installation is complete. Deflection measurements during and immediately following installation are required by the tank manufacturers for purposes of warranty validation. EPA believes that these are sufficient for the protection of human health and the environment.

In addition, investigators conducting a study of deflection monitoring of FRP tanks in Suffolk County (New York) have reported to EPA that the deflection measurement is often difficult to obtain unless special provisions are made for taking this measurement when the tank is installed. Special tools and training are required to prevent damage to the fill pipe tank seal (53 FR 10403) when obtaining access to the tank for conducting the test.

c. *Monitoring Corrosion Protection at Composite Tanks.* The Agency had also requested comments on requiring corrosion protection inspections for composite tanks. Some commenters stated that composite tanks should be monitored to ensure the integrity of the FRP coating, using the same criteria used for the cathodic protection inspections. Others felt that inspections of composite tanks are unnecessary after installation. The Agency disagrees with the commenters who recommended that composite tanks be periodically monitored to ensure the integrity of the FRP coating. It has been reported to EPA that most composite tanks pass when tested through the measurement of electrical continuity between some structure of the tank and the soil; however, the tanks that have "failed" this test showed no evidence of external corrosion once they were excavated and inspected. This is a point of continuing controversy within the National Association of Corrosion Engineers. Based on the superior performance of composite tanks to date (no documented failures due to external corrosion), EPA has decided not to mandate the corrosion protection monitoring of composite tanks in the final rule.

4. Compatibility (§ 280.32)

In the proposed rule, EPA set forth a general performance standard requiring owners and operators to use an UST system made of or lined with materials compatible with its stored substances. Incompatibility could result in the structural deterioration of the containment vessel or piping and cause releases into the environment (see 52 FR 12708–12710). Because EPA has found no significant evidence that incompatibility is a cause of release from USTs, the final rule contains no additional requirements and thus remains the same as proposed.

a. *Compatibility of FRP Tanks with Alcohol-Blended Fuels.* Since the proposal appeared, EPA sought additional information on problems reportedly caused by incompatibility of FRP tanks and alcohol-blended fuels. This search included conversations with several groups very familiar with these fuels and the FRP tank industry. In all of the information reviewed, only one release case was suspected to be caused by incompatibility problems. In addition, EPA has been unable to find any demonstrated incompatibility problem with 10-percent alcohol-blended fuels and FRP tank systems.

There are two types of FRP tanks. The standard FRP tank is compatible with up to 10-percent alcohol-blended fuels. The second type of FRP tank is manufactured with a special resin that ensures compatibility with blended fuels containing greater than 10-percent alcohol. Although the higher percentage alcohol-blended fuels (11 to 100 percent) might, over long periods of time (at least theoretically), pose compatibility problems in standard FRP tanks, the actual threat posed is believed to be very small for two reasons. First, the current and projected use of oxygenated fuels shows a trend that will increase the use of 10-percent alcohol-blended fuels but that will not increase the percentage of alcohol in the fuels. Second, information provided to the Agency indicates that numerous facets of industry (tank manufacturers, tank owners, and distributors) are very aware of and concerned with alcohol-blended fuels and FRP tank and piping compatibility problems. Industry practice is for the tank owner or operator to contact the manufacturer when a different product is to be stored, thus allowing the manufacturer to check its records concerning the compatibility of the stored substance and existing tank system. Numerous tanks have been relined with different resins that are compatible with the new fuels. EPA has added a note to the performance standard which refers to industry codes that can be used as guidance to help owners and operators with alcohol-blended fuels satisfy the compatibility requirement.

5. Repairs (§ 280.33)

In § 280.33 of the proposed rule, EPA proposed conditions under which repairs to an UST would be allowed. As discussed in the preamble to the proposal (52 FR 12710–12711), numerous state UST programs already address this topic in their regulations. Eight state programs refer to industry guidelines that should be followed in making repairs. Since proposal, EPA has continued to investigate the subject of UST system repairs. Numerous commenters on the proposal addressed this subject. It is obvious from the response received and other work undertaken by the Agency that there is a great deal of interest and ongoing activity in the field of UST management concerned with UST system repairs (including the development of new codes and practices). As discussed below, today's final rule incorporates several changes to the proposed requirements concerning UST repairs, including the deletion of, revision of, and addition to several of the conditions in the proposal.

a. *Repair and Lining (§ 280.33(a)).* Under § 280.33(a), EPA proposed to allow the repair and lining of a tank if four requirements were met: (1) A vacuum test was conducted, (2) the

lining material was compatible with the regulated substance stored, (3) the tank was inspected internally and ultrasonically tested, and (4) the tank had not been repaired or relined previously. Today's final rule revises some of these proposed requirements as discussed below.

In § 280.33(a)(1), EPA proposed requiring that a vacuum test be conducted on repaired tanks. This requirement was intended to ensure sound repairs (52 FR 12711). The vacuum test is no longer required for reasons that are discussed in more detail in subsection d. below.

In § 280.33(a)(2), EPA proposed requiring that the lining material applied to the interior of the tank be compatible with the regulated substance stored. All commenters agreed that this provision was necessary and pointed out that it is one that is already being followed in current industry practice. The specific requirement has, therefore, been deleted but the lining material is still required in the final rule to be compatible with the regulated substance stored in the tank because this concern is incorporated into all current codes and practices and one of these must be followed under the final rule.

In § 280.33(a)(3), EPA proposed internal inspection and ultrasonic testing of a tank to determine that it was structurally sound. Under today's final rule, the tank must still be internally inspected and determined to be structurally sound, but the ultrasonic test is no longer required. EPA received comments concerning the methods to test a tank to ensure that it is still structurally sound. These comments indicated that alternative tests were available to determine the structural integrity of the tank. National codes, including API 1631 and NLPA 631, provide alternative methods. Currently available data submitted and developed independently by EPA concerning field performance of tank lining indicate that if these codes are followed, the lined tanks will perform very well (see the discussion of interior lining under the upgrading section presented earlier in this preamble). EPA has learned that Underwriters Laboratories is currently developing a performance test (Subject 1856); however, it is still in the draft stage at this time. Consequently, today's final rule reflects the conclusion that it is not necessary to require a specific test to ensure structural soundness. Thus, EPA has substituted a performance requirement in § 280.33(d)(1) of the final rule that the internal inspection be conducted in accordance with codes of practice developed by a nationally recognized association or independent testing laboratory.

For purposes of assisting implementation of this general requirement, the final rule includes the note that the lining and repair procedures described in API 1631 and NLPA 631 may be used to comply with § 280.33(a). These codes describe test protocols for inspecting tanks to determine the structural soundness. The use of the ball peen hammer test is described, as well as the use of ultrasound. The codes include criteria for minimum allowable remaining thickness and maximum number of perforations per unit area in determining the condition of the tank. The codes also specify tests to ensure that the repair or lining has been performed correctly. EPA intends by this approach to allow other applicable national codes (such as UL 1856) developed in the future to be used in meeting this requirement.

In § 280.33(a)(4), EPA proposed limiting UST repair to only tanks that had not been previously repaired. In other words, a tank could be repaired only once so as to avoid continued repair of an UST that was fundamentally unsound (52 FR 12711). Some of the commenters suggested that, under this approach, EPA needed to resolve definitional questions concerning what constitutes a repair versus simple preventive maintenance. They expressed concern that the proposed one-time repair provision might preclude the use of preventive maintenance that would otherwise prevent leaks. Other commenters opposed this requirement, stating that structurally sound tanks could be repaired repeatedly; they also provided extensive data showing that repaired tanks had an excellent performance record. Other commenters opposed allowing any repairs to tanks that had leaked.

After study of the comments, review of the submitted performance data on repaired tanks, and further study of the codes, EPA agrees that restricting repair to a single time is unnecessary. The submitted record of repaired tanks was found to be very good and numerous EPA contacts with tank lining users and regulators have generally confirmed the accuracy of this performance record. Therefore, EPA has concluded that the tank repair codes already in existence (and in use for years) provide adequate standards and guidelines for determining if a particular tank qualifies for repair. Consequently, EPA has not included the one-time only repair requirement in the final rule and will allow tanks to be repaired more than once provided that they meet the standards for repairability in the applicable codes and that the repair is completed in compliance with these standards. If a tank has leaked product, however, the requirements for corrective action must be met and will sometimes require removal of the tank in order to complete the appropriate cleanup measures even if it is determined to be structurally sound and repairable.

b. *Cathodic Protection (§ 280.33(e)).* In § 280.33(b), EPA proposed that all steel tanks with corrosion holes that are subsequently repaired be retrofitted with a cathodic protection system that is designed by an independent corrosion expert and operated and maintained in accordance with § 280.31. Again, comments were received objecting to the requirement of the use of an "independent" corrosion expert on the grounds that many companies employ corrosion experts and that requiring an independent expert would be unnecessary and burdensome. As discussed earlier in this preamble in section IV.B.1.a., EPA is dropping the requirement for an "independent" corrosion expert in the final rule.

Comments were also received indicating that the addition of a cathodic protection system to a tank that was repaired by lining was not necessary and represented a significant additional expense. In view of the excellent performance record to date with relined tanks, EPA agrees with this point to some extent. Accordingly, in the final rule, EPA will allow lining alone as an upgrade alternative for corrosion protection provided that it is done within the confines of one of the national codes. In other words, a tank that is determined to be structurally sound under the criteria in the codes may be upgraded by lining alone for a 10-year period. The interior of the tank must be reinspected at the end of the 10-year period following the lining. If this inspection shows the tank is still sound, again in conformance with the existing codes, the upgrade can be extended for use for another 5 years. Thus, in the final rule, lining alone (without cathodic protection) provides an allowable upgrade for corrosion protection for a 10-year period. This period may be extended in 5-year increments by inspecting the tank according to the codes and demonstrating that the tank is still sound and that the lining can prevent releases for another 5 years.

c. *Authorized Repair for FRP Tanks (§ 280.33(b)).* In § 280.33(c), EPA proposed that repairs to FRP tanks be made only by the manufacturer's authorized representatives. Many

comments were received opposing this proposed requirement.

Commenters argued that qualified in-house personnel should be allowed to perform repairs and that such a restriction would limit the opportunity for private enterprise and small businesses to enter into the FRP repair industry. They also expressed concerns that restricting repairs to the manufacturer's authorized representatives would increase the cost to the owners and operators. Finally, they believed that such a restriction could result in insufficient repair capability and cause delays in repair, particularly in less populated and more remote regions.

Several comments were also received that supported the proposed requirements stating that long-term repair of FRP tanks requires the use of proper repair materials and techniques. Commenters in favor of this position argued that only the manufacturer has the requisite knowledge of the appropriate materials and methods to repair the specific composition of FRP used in its tanks. They pointed out that these manufacturers have already established authorized representatives trained in the proper methods and supplied with the quality-assured and correct materials. They also suggested that, because the manufacturer bears continuance of product liability, only the manufacturer's authorized representatives should be allowed to repair FRP tanks.

After carefully considering the arguments on both sides, EPA has decided to change the proposed requirement to allow not only the manufacturer's authorized representatives to repair FRP tanks but to also allow qualified in-house personnel to conduct repairs if a code of practice developed by a nationally recognized organization or independent testing laboratory is followed.

Information presented by commenters convinced the Agency that there are other qualified and competent individuals who could provide reliable and proper repair services for FRP UST systems. Though there are no currently established industry standard codes for repair of FRP tanks, at least one nationally recognized organization is presently developing such a code. Therefore, the Agency believes it would be imprudent to restrict repair services to only manufacturer's authorized representatives. The Agency also believes that allowing repairs to be conducted by other qualified in-house personnel in accordance with an industry code of practice will help ensure that there are adequate repair personnel available to provide competent repair services in a timely manner.

d. *Vacuum Test.* In § 280.33(d), EPA proposed requiring that a vacuum test (at 5.3 in. Hg) be performed on the tank following repair. Section 280.33(f) proposed the added requirement of having a tank tightness test performed within one year following the repair of a tank. Comments were received on the technical details of these tests and on whether they were really needed to determine that the repaired tank was sound and would not release product to the environment. Several commenters questioned the technical adequacy and appropriateness of the use of a vacuum test, objecting to this requirement as possibly damaging some types of tanks.

As a result of the technical information supplied by these commenters, EPA agrees that release detection (see § 280.43 (d)–(h) of the final rule), and quality control inspections performed according to established industry standards, should provide sufficient ensurance that the repair or lining of the tank was performed correctly, and thus, a vacuum test is not necessary. The current good performance of repaired tanks, most of which were not vacuum tested, points to the validity of these comments. In addition, EPA agrees that the test could be harmful in some cases. Consequently, the Agency has dropped the requirement of a vacuum test from the final rule.

EPA has also decided that the proposed requirement for a tank tightness test within one year following repair is not always necessary because it duplicates the industry practice of internally inspecting lined tanks and the release detection requirements that apply to the repaired tank. The good performance record of repaired tanks makes such an additional requirement unnecessary.

e. *Pipes and Fittings (§ 280.33(c)).* In § 280.33(c) of the proposal, EPA required replacement of pipes and fittings from which a release had occurred due to corrosion. The proposal did allow the tightening of loose fittings and joints for purposes of repairs. Comments were received indicating that FRP piping could be satisfactorily repaired and that some types of valves could also be repaired adequately without replacement. EPA believes that replacement of metal pipe sections and fittings that released product because of corrosion or other damage is still necessary but, in response to the issues raised by several commenters, will allow repairs of FRP piping in the final rule. The final rule does not prohibit repairs of metal valves provided that these can be done in a manner that provides sufficient protection against releases. To ensure that these allowable repairs are carried out according to sound practice, EPA requires that all of the repaired sections be tested and shown to be tight so that they will not have a release after they are put back into service.

f. *Recordkeeping (§ 280.33(f)).* In § 280.33(g) of the proposal, EPA required owners and operators of a repaired tank to maintain records, including signed certification, capable of demonstrating compliance with the requirements of this section.

Comments were received suggesting that a log should be required for each tank which would document installation, repairs and maintenance, products, tests, and results. EPA agrees that such a log would be a useful means for owners and operators to document their compliance with UST management requirements and would encourage it. EPA believes, however, that specifically requiring a log as opposed to other methods of recordkeeping is unnecessary.

The final rule retains the general requirement that owners and operators maintain records demonstrating compliance with this section for the operating life of the UST system.

6. Reporting and Recordkeeping (§ 280.34)

a. *Introduction.* In the preamble to the proposal (52 FR 12711), the Agency identified the importance of the retention by the UST system owner and operator of key records of operation on site, and reporting of significant events to the implementing agency. Because routine reporting would create an overwhelming burden for the implementing agency due to the size of the large regulated universe, records will often be the only way for implementing agencies to determine that certain important regulatory actions actually took place. Such recordkeeping also prompts the owner and operator to carry out regularly scheduled actions that are necessary to protect human health and the environment. Reporting of significant developments (such as leaks and large overfills) provides information to implementing agencies early enough for them to ensure effective action is taken by owners and operators to correct the problem. In general, the proposal consisted of simple but essential recordkeeping and reporting requirements: Recordkeeping that is sufficient to ensure each owner and operator can demonstrate the recent compliance status of the facility; and

reporting that allows for early involvement of the implementing agency should an UST system failure need to be corrected.

The proposal required owners and operators to report three significant events to the implementing agency: (1) New UST system installation; (2) final closure; and (3) a suspected release from an UST system and any subsequent actions needed to contain, correct, and clean up a release. An UST system owner and operator who experiences no problems in the operation of the UST system would only have minimal reporting requirements, imposed at the installation and closure of the facility. Only in the event of system failure and a confirmed release would the reporting requirements substantially increase, and the level of this increase would be directly related to the significance of the threat posed to the environment. Recordkeeping was proposed that would demonstrate the use of requisite prevention and monitoring equipment as well as the facility's recent compliance status, as displayed through recent release detection, maintenance, and testing results.

Public comments on the proposal generally supported the Agency's proposed approach to recordkeeping and reporting although some concerns were raised about the scattered placement of these requirements throughout the rule. Some commenters stated that this format made it difficult for them to find and made it confusing to determine all of the owner and operator's recordkeeping and reporting responsibilities. In response to this concern, the final rule includes in one section of the rule (§ 280.34) a reference or directory to all of the reporting and recordkeeping requirements found elsewhere in the rule.

Other commenters suggested that additional and, in some cases, more complete records be required in the final rule. As explained below, however, today's recordkeeping and reporting requirements have remained essentially the same as were proposed. A few minor recordkeeping requirements have been added, and a few additional pieces of information must be reported during corrective actions to assist the implementing agency's assessment of the release problem. These few changes to specific recordkeeping and reporting requirements are discussed elsewhere in today's preamble as part of the more detailed analysis of the final rule's technical requirements for closure; release detection; tank system repair, operation and maintenance; and corrective action.

b. *Summary of Final Approach.* EPA received widespread support for the general notion that at least some recordkeeping and reporting is essential to ensure owners and operators adhere to the technical standards being promulgated today. EPA did not receive any information or comments to persuade it that a significant departure from the proposed approach was necessary or appropriate. Thus, the final rule essentially retains the proposed approach.

As discussed in the preamble to the proposal (52 FR 12712), recordkeeping is necessary to ensure compliance with the technical standards for release detection, closure, operation and maintenance of corrosion protection systems, and UST system repair. The Agency, as well as many commenters, believes, however, that demonstration of compliance of all requirements over the total operating life of the facility is impractical and unnecessary to protect human health and the environment. Today's approach is predicated on the intent to impose the minimum burden on the regulated community while at the same time ensuring that all owners and operators will be able to demonstrate at the request of the implementing agency whether their UST system is being managed in a manner that will protect human health and the environment. For example, the time frames for record retention were established to enable a demonstration of recent facility compliance status prior to an on-site visit. EPA is convinced that today's final recordkeeping requirements are essential and serve both the implementing agency's and regulated community's mutual interest. Many owners and operators may decide to keep more detailed records than are required or retain records for longer than today's minimum time frames. State and local governments may want to require additional recordkeeping.

Today's final reporting and notification requirements are also intended to foster the self-implementation that underlies today's final technical standards. Under today's reporting requirements, an owner and operator do not have any reporting obligations over the entire service life of the facility beyond the initial notification at installation and the final notification of permanent closure unless a suspected release in the environment has occurred. Given the enormous size of this regulated community, the Agency has concluded that it is impractical and unnecessary to overburden implementing agencies with periodic or routine reports from UST facilities that are operated properly and have no adverse environmental impacts. The Agency expects that most UST systems will rapidly improve and move into this category during the coming 10-year upgrade period.

Reporting of releases and corrective actions taken is explicitly required under section 9003(c) of RCRA. Although EPA expects numerous releases will be identified within this large regulated community, the Agency has concluded that reporting them to the implementing agency is a necessary first step to ensure protection of human health and the environment. Today's final approach to the reporting of releases and corrective action is based on the simple assumption that the more serious a release and its impacts are, the greater the necessity for interaction with (and reporting to) the implementing agency. The implementing agency is expected to ensure that the public interest is represented during cleanup decisionmaking and actual corrective action activities. The greater the threat to human health and the environment, the more reporting and governmental oversight that is needed.

Public comment on recordkeeping was generally favorable. Some commenters, however, objected to the differentiation between on-site and off-site record maintenance and availability. Under the proposal, records kept off-site had to be available within 24 hours while on-site records had to be immediately available. Other commenters objected to the requirement for providing off-site records within 24 hours, noting that sometimes important records are retained at corporate headquarters far removed from the UST sites. EPA agrees that there should be no real distinction for availability of records and that the 24-hour allowance may seem inequitable to those who must maintain records that are immediately available on-site. However, the provision in the final rule remains unchanged. Records retained at the site must be available immediately because EPA has concluded that there is no reason that they should not be except that they are not present or up-to-date when requested. When records are maintained at a business office off-site, they must be located at a readily available site and provided upon request (§ 280.32(c)). This change to require off-site records to be provided "upon request" responds to those commenters who pointed out that the proposed 24-hour limit was often impossible to achieve when records are stored at off-site locations. This change is also made to provide some discretion to the on-site inspector who can talk to

the owner and operator and determine where the records are stored off-site and decide whether they should be made available for inspection. If the records are easily accessible, the inspector may request that they be made immediately available. This change also responds to the commenter who believed there should be the same time allowed for providing records stored either on- or off-site because off-site records must be provided within the time frame requested by the implementing agency.

EPA believes that, under most circumstances, copies of the originals should be maintained on-site. If copies are not maintained at the sites, the owner and operator will have to take on the added burden of providing the implementing agency with these copies in an expedited fashion when they are requested.

Also, the Agency has determined that it will not make site plans a required record because it is not necessary to ensure compliance with the technical requirements promulgated today. A site plan is, however, a useful tool for owners and operators. The Agency notes that site plans are recommended in recent updates of national codes addressed to the installation of new UST systems.

Finally, as noted above, in response to commenters' confusion over the various recordkeeping and reporting requirements in the proposal, the final rule has been revised to include a directory in § 280.34 that is intended to simply summarize and identify the recordkeeping and reporting requirements. This new section is intended to eliminate the confusion identified by several commenters when trying to locate their recordkeeping and reporting responsibilities in the proposal. Each item of reporting and recordkeeping is identified and listed, including a reference to the section of the final rule in which full details may be found. Requirements with respect to the general availability and maintenance of records are presented along with this directory section and have not changed since proposal, except for the slight extension of the allowable period for making off-site records available to the inspector (see discussion above).

D. Release Detection

This section of today's preamble provides a summary of the Agency's final approach to release detection, the proposed rule, and the major changes from the proposal. A section-by-section analysis of the final rule (IV.D.2.) discusses in detail the final release detection requirements, including highlights of major public comments received.

1. Overview

a. *General Approach to Release Detection.* As described earlier in this preamble, today's requirements that new and existing UST systems be properly installed, protected from corrosion, and equipped with spill and overfill protection will dramatically reduce UST system releases. Release detection is an essential backup measure to prevention, particularly for unprotected steel UST systems (prior to upgrading or replacement) and pressurized piping because they are more prone to releases. A variety of release detection methods have been successfully applied to USTs. These methods can be grouped into six general categories: tightness or precision tests, tank gauging systems, inventory control methods, ground-water monitoring, vapor monitoring, and interstitial monitoring. Each was discussed in the preamble to the proposal (52 FR 12714). State and local programs have chosen to rely on different combinations of these methods. They all appear to be successfully detecting releases when properly applied. To maintain flexibility in the selection of release detection methods, both for the implementing agencies and for the owners and operators, the proposal allowed the selection of release detection to be tailored to the characteristics of each site and, therefore, avoided unnecessary disruption of successful state and local programs. The most important features of the proposed and final rules are summarized in the sections below.

b. *Highlights of the Proposed Rule.* In the proposed rule, the release detection strategy relied on the use of either monthly detection methods or a combination of tightness testing (performed semiannually to every 5 years) and monthly inventory control. Frequent testing dramatically increases the probability of detecting a release and reduces the length of time a release can go undetected. A 30-day frequency was selected as a practical monitoring frequency that was sufficient to protect human health and the environment. The proposed rule required only one release detection method at each UST site, because frequent use of one monitoring method was sufficient to discover releases before they could cause significant damage to the environment.

Current industry practices generally do not include frequent release detection and most releases that are discovered are detected through impacts on the surrounding community or large inventory losses. Consequently, substantial time and effort will be required to reach the goal of monthly monitoring for all UST systems. The proposal phased in detection requirements over 5 years to allow the leak detection industry time to expand and to more evenly schedule the demand for detection equipment. The proposed rule also allowed less frequent use of tank testing (every 3 or 5 years when combined with monthly inventory controls) during the first 10 years of the program. The goal of the proposed approach was the installation of release detection as quickly as possible on the tanks most likely to leak.

To ensure flexibility, all proven methods of release detection were allowed in the proposed rule. In the absence of adequate data, the proposed rule did not set one performance standard for all release detection methods. Instead, each method was required to meet performance and design standards specific to that method. These standards were based on the experience of state programs that indicated these methods were effective under the specified conditions.

c. *Major Changes in the Final Rule.* Although the overall release detection strategy has not changed from the proposal, specific requirements on how and when release detection must be conducted have changed. The four most significant revisions to the proposed regulations include:

- More frequent monitoring of existing unprotected tanks during the 10-year upgrade period;
- Less frequent monitoring of new and upgraded tanks until age 10;
- Gradual phase-in of release detection based on tank age; and
- More stringent requirements for pressurized piping.

These changes, discussed generally in section III.B. of today's preamble, are presented in detail in the appropriate parts of the section-by-section analysis below. Additional revisions made to the release detection requirements are also discussed in the section-by-section analysis.

In addition, three important organizational changes were made in response to commenters' concerns. First, in the proposed rule, the requirements for hazardous substance USTs were in a subsection of the petroleum UST requirements, and several commenters noted that they had difficulty finding and understanding the requirements for these systems. In response to this concern, the release detection requirements for petroleum and hazardous substance USTs have been

separated in the final rule and placed in §§ 280.41 and 280.42, respectively.

Second, tanks and associated piping were treated in the proposed rule as a single unit. Each method of release detection applied to the tank was required also to detect leaks from piping. In another section of the proposed rule, there were additional release detection requirements that could only be applied to the piping. Commenters noted that this structure limited flexibility in meeting the release detection requirements by forcing the same method to be used for tanks and piping. They noted that the same method may not work for both tanks and piping and several viable detection methods for piping were excluded. In addition, the information on causes of release indicates that piping is generally a greater release threat than tanks. Thus, today's final rule treats piping separately from and with equal importance to the tank. The release detection methods for tanks and piping have been separated in the final rule into §§ 280.43 and 280.44, respectively.

Third, in the final rule, the release detection requirements for each type of UST system, including allowed methods and required frequencies of testing, have been consolidated into two brief sections (§§ 280.41 and 280.42). The detailed performance standards for each method of detection are now contained in §§ 280.43 and 280.44. The section-by-section analysis of the preamble parallels this structure so that all discussion of the phase-in schedule, the methods and combinations of methods allowed for each type of system, and frequencies of testing are discussed first (sections IV.D.2. a–c.). Discussion of research and public comments on the technical details of each detection method for tanks and piping is reserved for later sections (IV.D.2. d–e.).

2. Section-by-Section Analysis

a. *General Requirements (§ 280.40).—(1) Use of One Release Detection Method.* In the proposed rule, a single release detection method could be used to meet the requirement to detect releases from both the tank and connected piping. As discussed in more detail in the preamble to the proposed rule (52 FR 12718–12719), the use of redundant methods of release detection was not required at each UST site because the Agency was not convinced that the required use of these "backup" methods would provide significant environmental gains in comparison to the adverse impacts on program implementation. Some commenters opposed allowing only one method of release detection primarily because they believe all the methods are unreliable and insufficiently developed, particularly external methods. Other commenters, however, agreed with EPA's position on this issue and cited their own satisfactory experience with the various methods.

The final rule continues to allow the use of a single properly installed and operated release detection method for tanks when testing is performed monthly. When less frequent monitoring is used it must be backed up by use of monthly inventory control. Owners and operators remain free to use multiple methods if they desire, and state and local programs can require redundant systems.

EPA decided against requiring multiple methods because frequent use of a single detection method, when combined with the prevention measures contained in other sections of the rule, is sufficient to protect human health and the environment. The performance standards, design criteria, and limitations on the methods contained in the rule are intended to ensure that the optimum performance of each release detection method is achieved. Repeating the test monthly dramatically reduces the possibility of failing to detect a leak. Each test serves as a separate check of the integrity of the UST system. Field reports confirm the success of single methods in detecting releases from UST systems. For example, Dade County, Florida, has detected over 350 releases using ground-water monitoring wells. EPA's research on the best ways to use some of the different release detection methods is directed towards improving the field performance of various types of methods. For tanks and suction piping systems, one detection method, combined with prevention efforts, should virtually eliminate undetected releases.

The Agency chose not to rely on one method of detection for pressurized piping, however. Even with good efforts at prevention, these systems may still result in significant releases. Consequently, the final rule requires existing and new pressurized lines to use both automatic line leak detectors and another leak detection method (either monthly monitoring or annual line tightness tests).

(2) Scope of Release Detection (§ 280.40(a)(1)). The proposed rule provided a general requirement that the release detection method be "capable of detecting a release from any portion of the UST system." The purpose of this requirement was to ensure detection of both tank and piping leaks. A few commenters objected to the general nature of the wording of the requirement because it includes some portions of the UST system such as vent lines, fill pipes, and bungs on the top of the tank that do not normally contain regulated substances. Some tank tightness test methods do not test the top of the tank and, thus, do not detect the presence of holes in the vents and bungs. These portions of the tank only leak when the tank is overfilled.

EPA shares the concern of commenters that a strict interpretation of the wording in the proposed requirement could result in some release detection methods, particularly non-overfill tightness tests, not being allowed because they cannot detect releases from portions of the UST system that do not normally leak. The final rule's wording that the methods must be able to detect a release from "any portion of the tank and the connected underground piping that routinely contains product" is intended to make clear that tank tightness test methods that do not overfill the tank can be used, as long as they meet the other applicable performance standards and another acceptable method is used to test or monitor the piping.

Furthermore, releases from the top of the tank or vents occur during overfills, which are not a normal operating condition. Prevention of overfills is addressed in § 280.20(c), § 280.21(d), and § 280.30, which together require that all new and upgraded tanks have overfill prevention equipment and spill catchment devices and that proper filling procedures be followed to prevent these "nonoperational" releases. These requirements are intended to prevent these types of releases; thus, EPA does not believe methods of release detection must be used that will detect them.

The additional information on causes of release that EPA has collected since the proposal (see section II.F. of this preamble) reinforces the fact that piping is a major source of releases. Therefore, the final rule continues to require that the methods of release detection that are used must be capable (either singly or in combination) of detecting a release from both the tank vessel and the piping that conveys product.

(3) Installation, Operation, Calibration, and Maintenance (§ 280.40(a)(2)). To ensure that the release detection method will reliably detect releases once in place, the proposed rule required installation, calibration, operation, and maintenance according to manufacturers' specifications. At proposal, the Agency decided against requiring certification of installers and servicers of release

detection equipment because these programs are not currently developed and there are other effective approaches for ensuring proper installation (52 FR 12719). As discussed below, commenters stated that the rule should require certification of installers and servicers of release detection equipment. After consideration of these comments, EPA continues to believe that such a requirement would hinder rapid installation and flexibility in designing effective ways to regulate installers. Today's final rule will remain as proposed for the reasons discussed below.

The UST release detection field is a new and proliferating area of technology, and, because of this, some commenters suggested that a certification program should be required for installers and operators of release detection equipment to ensure high quality work and to assist owners and operators in selecting qualified personnel. Certification by EPA or state agencies was suggested. Other commenters felt that a state or Federal certification program would limit the number of installers, would increase the cost of release detection provided by those installers who were already certified, and would delay widespread application of release detection methods. Some of these commenters suggested alternatives to state or Federal installer certification.

By including the performance standard in the proposed rule, EPA acknowledged that ensuring proper installation and operation of equipment is important. Although a certification program is a viable approach to achieving this goal, EPA disagrees with commenters who felt that state or Federal certification is the only way to ensure quality installations. Existing state programs that lack certification programs have been effective at discovering releases. As commenters noted, there are numerous possible approaches to ensure proper installation. Mandating certification would unnecessarily restrict states from designing alternative effective ways to regulate installers.

EPA agrees with commenters that the time required to conduct a certification program would seriously hinder rapid implementation of release detection. Installing leak detection quickly on existing tanks, which are primarily unprotected steel, will be of significant environmental benefit, even in the absence of certification. For these reasons, no additional requirements have been included in the final rule to ensure release detection installation and operation.

(4) Meeting the Performance Standards (§ 280.40(a)(3)). In the proposal's preamble (52 FR 12714–12718), the Agency described three possible approaches to ensure the quality of release detection equipment used to meet the regulations. EPA solicited comments on a general performance standard, certification of methods, and a method-specific performance standard. The Agency proposed the method-specific approach because it offered the greatest flexibility and facilitated rapid program implementation. Commenters generally agreed with the advantages and disadvantages ascribed to each approach, and many concluded that the method-specific approach is the best possible at present. The final rule thus retains method-specific standards by requiring each method used meet the standards in § 280.43 or § 280.44.

Commenters generally agreed with both the explanation and the conclusion in the proposal preamble concerning the use of method-specific release detection standards. Many commenters believe that the method-specific approach would be the most realistic approach given our current knowledge and that it would allow the widest range of choices among effective technologies. Some commenters, however, believed a general standard should be formulated based on the standard specified for tank tightness testing (0.1 gallon per hour). Because the method-specific standard would allow varying performance standards, these commenters felt that many owners would simply select the cheapest, least effective method. Other commenters recommended a certification approach, feeling that consistency was less important than ensuring that the regulated community knew exactly what devices met the standards.

The preamble to the proposal contained an extensive discussion of the merits of each of the three approaches to regulating release detection. One approach considered by the Agency was to specify a general standard for the leak rate or quantity which must be detected by a method and not specify individual methods or restrictions on their use. This approach was viewed as providing the most consistent level of performance and the one that best challenged manufacturers to develop defensible performance claims for their equipment. This approach is not used in the final rule for two reasons. First, the Agency does not have sufficient information to relate leak rates to the quantity of product detected by external methods under all possible site conditions. Second, eliminating the specific methods in the rule would slow program implementation by forcing owners and operators to wait for detailed, extensive performance information before conducting release detection. The final rule, however, incorporates the flexibility of a general performance standard by allowing, in addition to specific methods, any method which can detect a 0.2 gallon per hour leak rate with a probability of detection of 0.95 and a probability of false alarm of 0.05 within a month. For a discussion of this addition, see section IV.D.2.a.4. of today's preamble.

A certification approach applied at the federal level would provide the regulated community with the clearest direction concerning which release detection equipment was acceptable. This approach is not used in the final rule because it would slow program implementation and reduce the choices available to owners and operators over the next several years. Further, it was not viewed as necessary because comparable performance information for each method can be generated by private efforts without federal involvement.

Research results and data submitted by commenters after the proposal have reinforced the Agency's belief that all of the methods that were proposed are effective release detection techniques if used within the context of certain constraints (discussed in the section on individual methods). EPA believes that offering a broad selection of methods will make it easier for owners and operators to comply with the regulation. Also, a broad selection is consistent with the encouragement of existing industry trends and state programs, which have utilized a variety of release technologies and which have been proven effective at discovering leaks. Information gathered by EPA suggests, but does not conclusively prove, that all of the methods included in the rule can detect at least a 0.2 gallon per hour release within 30 days when used in accordance with the restrictions on that method. The Agency believes that all methods will eventually be able to prove they reliably detect 0.2 gallon per hour releases and has included that as a standard for approving new methods. This standard is discussed in section IV.D.2.a.4. Allowing a range of methods with specific standards does not mean the cheapest, least effective method will be selected, because cost and effectiveness are not necessarily related. For instance, under some site conditions

(e.g., ground water within the excavation zone), manual ground-water sampling may be the cheapest method and will reliably detect releases substantially smaller than 0.2 gallon per hour.

(5) Delay in Detection Probabilities (§ 280.40(a)(3)). As discussed in the proposal preamble (52 FR 12719), a complete release detection performance standard includes not only the leak rate or quantity that a method must detect, but also the probabilities of detection (PD) and false alarm (PFA). In the proposed regulations, complete standards of this type were included for in-tank detection methods in the section on specific methods. Research results and commenters' concerns have caused the Agency to make several important changes in the final rule. The probabilities have been moved to the general requirements section (§ 280.40(a)(3)) and changed slightly, and the effective date has been delayed for two years. These changes are discussed below.

The proposal preamble emphasized the statistical nature of detecting leaks and the large number of variables that add to the uncertainty in declaring a leak. The probability of detecting a leak is dependent on its size. All methods are more likely to discover large leaks than small ones. With regard to detecting the smallest leaks, the Agency recognized that good methods properly operated may mistakenly declare a leak when none exists (false alarm) or fail to discover some leaks (missed detection). Consequently, the standards for tank tightness testing and automatic in-tank monitoring included the requirement that methods detect a specified leak rate with a PD of 0.99 and a PFA of 0.01. The Agency remains convinced that specifying probabilities in this manner better defines the performance standards and should help owners and operators make informed choices about leak detection.

The final rule retains the PD and PFA as part of the leak detection performance standard. The probabilities have been removed from the standards for specific methods and placed in the general requirements section. This change expands the coverage of the probabilities to include automatic line leak detectors and interstitial monitors as well as tank and line tightness tests and automatic in-tank monitors. The Agency made this change to clarify that all leak rates or quantities specified as part of a method-specific standard in § 280.43 or § 280.44 must be detected with the same level of reliability.

The proposed rule set the PD at 0.99 and the PFA at 0.01. In the final rule, the PD has been changed to 0.95, and the PFA has been changed to 0.05. The Agency made this change for several reasons.

First, the Agency is not convinced that the 0.99/0.01 specification was a realistic standard given the wide range of variables affecting leak detection results. EPA's study of tank testing methods has attempted to determine performance at this level of precision and only 2 methods of the 25 studied could meet the standard. No study of this sort has been undertaken for the other methods covered by the probabilities in the final rule. Further, EPA does not plan to conduct studies similar to the one for tank tightness testing for other leak detection methods. Rather, the Agency intends that manufacturers should evaluate their methods to prove they meet the standard in the rule. Thus, the change in the final rule will encourage manufacturers to undertake this research. EPA is developing procedures for testing release detection equipment in a common way to help manufacturers in evaluating their equipment. EPA chose the 0.95/0.05 specification in the final rule because it is a level of performance attained by a modified commercial tank test method in the National Motor Fuel Survey. In addition, several commenters felt that a probability of detection of 0.95 was more realistic and was adequate to protect human health and the environment.

Because the final rule requires frequent-to-continuous monitoring, the change in probabilities will have little environmental impact. For example, a test which detects 0.1 gallon per hour leaks 95 percent of the time in one test will discover 99.9 percent of 0.1 gallon per hour leaks in 3 consecutive tests. Further, tests that meet this standard are virtually certain to detect leaks larger than this threshold and will detect a significant number of leaks below the threshold. Under either standard, large leaks will be caught immediately and small leaks will be discovered before they cause environmental damage.

The final change in this section of the final rule is a delay in the effective date of the probabilities. As discussed above, few methods have been proven to meet the complete standard specified in the proposed rule. However, preliminary results from the EPA's tank testing study (Notice of Availability; 53 FR 10403) indicate that several methods could meet the standard with simple changes in procedures and equipment. The Agency also wanted to allow time for manufacturers of automatic tank gauging systems, automatic line leak detectors, and interstitial monitors to prove that their systems meet the complete standard. The Agency believes manufacturers can make the necessary changes to their methods and evaluate their performance in 2 years. Until the probabilities become effective, methods need only detect the leak rate or quantity specified for that method in § 280.43 and § 280.44. Methods installed or conducted during this 2-year phase-in will not need to be performed again or replaced after the probabilities become effective, but all methods used after that period of time will have to achieve the probability standard.

(6) Reporting of Positive Monitoring Results (§ 280.40(b)). The proposed rule contained a provision in Subpart E that the owner and operator must report all suspected releases indicated by the results of release detection monitoring. Perhaps because this release detection reporting requirement was in a different subpart from the release detection technical requirements, commenters stated that it was unclear when a suspected release needed to be reported. To clarify and strengthen the requirement to report all suspected releases, a provision has been added to Subpart D (§ 280.40(b)) in the final rule explicitly stating that any indication by the release detection method that a release has occurred must be reported in accordance with reporting procedures described in Subpart E.

It is intended that all release detection equipment be operated at least at the level of sensitivity indicated in the performance standard. For example, 2 years after the effective date of the rule, the tightness test threshold (i.e., test result that indicates a suspected release) should be set to detect 0.1 gallon per hour leak rates with a PD of 95 percent and a PFA of 5 percent; this threshold value may differ for various tightness testing devices. Manufacturers of the release detection equipment must determine what this threshold value must be to meet the performance standard and inform operators of their equipment. Until the manufacturer sets such a threshold, tank test operators should continue to use the current 0.05 gallon per hour threshold. For most tank testing methods, this will approximate the threshold level for detecting 0.1 gallon per hour leaks. The owner and operator would report a suspected release when a test result exceeds 0.05 gallon per hour or the threshold value provided by the manufacturer in accordance with § 280.50.

It is important to note that the performance standards such as 0.2 gallon per hour or ⅛ inch of product on

top of the ground water are device performance standards set to exclude less effective equipment. The standards are not allowable contamination levels. Owners and operators are still responsible for correcting leaks and cleaning up any product released to the environment. It is in their interest to use the most effective release detection equipment and operate it so the device detects releases as quickly as possible to avoid potentially costly corrective action.

(7) Phase-in of Release Detection (§ 280.40(c)). The proposed rule required a 3- or 5-year phase-in of release detection, with the shorter phase-in period applied to USTs without protection from corrosion and the longer phase-in to those USTs with corrosion protection. These phase-in periods were based, in part, on the experiences of several state and local UST programs in initiating release detection under a phase-in schedule that was typically 3 to 5 years (52 FR 12677, 12703–12704). This phase-in was proposed to ensure that tanks with the greater risk of leaking (those unprotected from corrosion) had release detection installed first. As discussed in the proposal preamble, the total phase-in period covers 5 years to allow enough time for the release detection industry to respond to the demand, owners and operators of existing tanks to plan their needs, and implementing agencies to develop their programs. The proposed rule also required closure of existing USTs that could not meet the phase-in schedule.

Commenters recommended a variety of phase-in periods and generally recommended age as the most appropriate basis for the phase-in. Therefore, § 280.40(c) of the final rule phases in the implementation of release detection over 1 to 5 years based on the age of the system (oldest tanks first). Requiring the oldest tanks to phase in release detection sooner, within 1 year, ensures that those UST systems most likely to leak are addressed first. The final rule also retains the proposed requirement of closure of any USTs that cannot meet the release detection requirements by the phase-in date. A significant addition to the final rule is the requirement that existing systems with pressurized piping must retrofit line leak detectors within 2 years. Comments received regarding the phase-in of release detection are discussed in more detail below.

Commenters recommended a range of time periods from 3 to 10 years for completing the phase-in of release detection. Commenters supporting a longer period believed that the proposed phase-in periods would overburden the release detection industry, resulting in poor quality installations and late compliance, and cause economic hardship to owners and operators. Those commenters recommending shorter phase-in periods believed that a tighter schedule would prevent significant environmental damage. The Agency has decided in the final rule to retain the overall 5-year phase-in time period for the same reasons outlined in the proposal preamble (52 FR 12677, 12703, and 12704). Based on experience at the state and local level, EPA does not believe release detection can be installed and conducted at over 700,000 UST sites nationwide in less than 5 years. Not only will it be difficult to do in less than 5 years, but some of the release detection systems installed on a more expeditious timetable could be lower quality as a result. As discussed above, however, the greatest release potential will be during this interim period. Thus, lengthening the phase-in period would result in unacceptably greater environmental damage. Moreover, even accepting commenters' concerns about economic burdens, lengthening the phase-in would not provide a resolution because retrofitting would still be necessary ultimately and would be coupled with greater corrective action costs brought on by the delay in detection. For these reasons, today's final rule retains the 5-year phase-in period.

During the 5-year phase-in period, it is important to direct release detection efforts at the existing UST systems most likely to leak. Many commenters recommended achieving this goal by phasing in release detection based on the age of the UST system. They pointed out that this approach also has the advantage of stabilizing the demand for release detection, resulting in less burden for both the release detection industry and the owners and operators. It also has the advantage of addressing first the tanks that are most likely to leak. Several commenters pointed out their concerns that if the phase-in is not sequenced in its implementation, the regulated community will collectively wait until the last minute, and unavoidable further delays will ensue. A few commenters opposed an age-based schedule because it was too simplistic or ignored other important factors.

The Agency agrees with commenters suggesting a release detection phase-in schedule based on age. Although age is not the only factor in determining when a tank will leak, it is an important factor that is readily understood and determined and, therefore, easy to implement. This approach is already being used successfully in several state and local programs. The approach in the final rule is not a radical departure from the proposed phase-in schedule. The causes-of-release study indicates that most existing protected USTs are less than 10 years old. Under both the proposed and final phase-in schedules, these tanks must phase in release detection within 5 years after promulgation. EPA believes that the main impact of the revised schedule will be to spread out the phase-in of release detection on unprotected USTs, which represent over 75 percent of UST systems, over years 1 through 4 rather than require it all at year 3, resulting in fewer implementation bottlenecks.

Some commenters recommended a class approach (sensitive areas first) to phasing in release detection. Although the concept of retrofitting release detection in vulnerable areas first is appealing, EPA does not believe it is possible to identify sensitive classes in any meaningful way at the Federal level (see section III.C. of this preamble). States can choose to phase in release detection based on a class approach without losing the ability to receive state program approval (see § 281.33) if they complete a phase-in of release detection at all existing tanks within 5 years and pressurized piping in 2 years.

EPA's information on the causes of release clearly indicates that pressurized piping represents a major source of uncontrolled releases. None of the requirements for existing systems in the proposed rule addressed the threat of catastrophic releases from pressurized piping. Consequently, in the supplemental notice (52 FR 48638), the Agency requested comment on the idea of requiring existing systems to retrofit line leak detectors on pressurized piping. Commenters generally felt that it was appropriate to require such a retrofit and recommended a variety of phase-in schedules. EPA agrees with commenters who recommended a short phase-in schedule because this piping is a significant environmental hazard, retrofitting line leak detectors is relatively easy and inexpensive, the devices are highly effective (see section IV.D.2.e.1. of the preamble), and many systems are already equipped with the devices. Consequently, the final rule requires that existing pressurized piping meet the same standards as new piping 2 years after the effective date of the rule (see section IV.D.2.b.2. of the preamble for piping requirements).

(8) Closure if Release Detection Is Not Installed (280.40(d)). In the proposed rule, EPA required closure of an existing

UST system if a method of release detection was not installed by the end of the specified phase-in period. Most existing USTs are not protected from corrosion and, thus, are likely to corrode and eventually leak. The selected phase-in schedule discussed above is considered the maximum time that these systems should be allowed to operate without release detection. Therefore, the final rule continues to require that UST systems be closed if release detection cannot be retrofitted or applied by the phase-in date.

One commenter noted that the closure procedures of the proposed rule required a site assessment of the excavation zone before closure, the results of which might delay closure beyond the allowable time frame. Although the Agency recognizes that closure can be a time-consuming process, it should not require any more time than the selection and installation of release detection equipment. The final rule requires that, by the phase-in date, the owner must remove the tank or fill it with inert material and complete the site assessment. Should a release be discovered, responding to the findings of the site assessment is part of corrective action and need not be completed by the phase-in deadline. Owners and operators are expected to plan ahead to ensure that they complete installation of release detection or the closure procedures by the specified date. This will allow the implementing agency to ensure compliance with both requirements with a single inspection. For these reasons, EPA has retained in the final rule the provision to complete closure by the end of the phase-in period.

(9) Other Changes. One of the general requirements in the proposed rule required a site assessment prior to the installation of any external leak detection system to ensure compliance with the performance standards for the particular method used. To clarify that the site assessment is intended to include only an analysis of selected factors within or beneath the excavation zone, the general requirement has been deleted, and the only assessment requirements are contained in § 280.43 (e)(6) and (f)(7) of the final rule. These changes are discussed below.

The importance of a site assessment in correctly selecting and applying an external method was discussed in the proposal preamble (52 FR 12720–12722). Although numerous factors were listed in the proposal preamble concerning a site assessment, EPA stressed that the assessment should, at a minimum, ensure compliance with the method-specific restrictions in the proposed rule. EPA requested comment on the proposal to include these or other site variables in the assessment requirement. Some commenters stated their belief that a complete site assessment is too extensive a technique to be required for demonstrating the performance of external release detection and does not provide much useful information because conditions at the site change constantly. Most commenters, however, agreed that a site assessment is appropriate before installation of external release detection systems. In fact, these commenters wanted to extend this provision by requiring site assessments for all release detection methods, thereby requiring a quick national survey of all UST site conditions. Others suggested at least requiring a site assessment periodically at all USTs.

The Agency continues to believe that site assessment of the excavation zone is necessary to ensure the reliability of external methods. The Agency also agrees with comments stating that the site assessment requires no more information beyond checking a site for compliance with the restrictions on the methods. Conditions in and below the excavation zone must be known before an external method is selected or installed because inappropriate excavation conditions can render some external methods ineffective. Internal methods are not typically affected by site conditions, and those methods that are affected (e.g., water table level can affect tightness tests) can account for these conditions without performing a site assessment. The major factors determining the effectiveness of groundwater and vapor monitoring were included in the method-specific performance requirements in the proposed rule, and, for most sites, an adequate assessment will require evaluation of only those factors.

The Agency decided against requiring a more extensive, more frequent, or a more widely applied site assessment because of the unnecessary burden it would place on implementing agencies and the possible delays in release detection compliance it would cause. The Agency believes that the greatest benefit for existing systems, short of upgrade or replacement, will be obtained by conducting release detection as quickly as possible. The site assessment for certain external methods is retained in the final rule in § 280.43 (e)(6) and (f)(7) because EPA believes it is important to ensure that these methods work properly. The site assessment is not intended to be a general search for contamination at the site. Any contamination found, however, must be reported, and the owner and operator must comply with the corrective action requirements of Subpart F. A more detailed search for contamination is required when tanks close under Subpart G.

b. *Requirements for Petroleum UST Systems (§ 280.41). (1) Requirements for Petroleum Tanks (§ 280.41(a))—(a) Overview.* The proposed rule offered a variety of release detection methods for petroleum UST systems. New or existing UST systems could perform accurate monthly monitoring using automatic tank gauges, vapor monitors, groundwater monitors, interstitial monitors, or other methods approved by the implementing agency. The proposal allowed two exceptions to the monthly monitoring requirement. First, when combined with monthly inventory control, tank tightness tests could be performed semiannually at new UST systems. The proposal allowed semiannual tightness testing and inventory reconciliation for new tanks because the combination was believed to be as accurate as monthly monitoring. Second, when combined with monthly inventory control, tank tightness tests could be performed less frequently at existing USTs during the 10-year upgrade period (every 3 years for bare steel systems or every 5 years for protected tanks). Less infrequent tank tests for existing USTs were permitted during the phase-in period because the Agency believed the release detection industry lacked the capacity to perform monthly monitoring at all existing tanks in 3 to 5 years.

The use of monthly monitoring methods has been retained as an option for all petroleum UST systems in the final rule. The final rule also contains two exceptions for tightness testing similar to those in the proposal. An overview of the release detection requirements is presented in Figure 4. During the 10-year upgrade period at

existing tanks that are not adequately protected from corrosion and lack spill and overfill equipment, the rule now requires either (1) annual tank tests and monthly inventory controls, or (2) monthly monitoring. Tanks that meet the standards for new or upgraded tanks are required either (1) to conduct tank tests every 5 years combined with monthly inventory controls for a 10-year period following the date of installation or upgrade or until 1998, whichever is later, or (2) to conduct monthly monitoring. Also, in both cases, by the end of the 10-year period, these USTs must be using an approved monthly monitoring method.

BILLING CODE 6560-50-M

tanks that were used in the past for the storage of regulated substances. Subpart G (§ 280.70) addresses out-of-service tanks, and this issue is addressed in section IV.G. of this preamble.

(11) Free Product. "Free product" refers to a regulated substance that is present as a non-aqueous-phase liquid (e.g., liquid not dissolved in water).

The proposal defined free product as "regulated substance in the non-aqueous phase (e.g., liquid not dissolved in water) that is beneath the surface of the ground." One commenter suggested that this phrase should include a non-aqueous phase regulated substance that is on surface water. The Agency agrees that this is free product and has modified the definition accordingly. Other commenters suggested that EPA clarify the definition to clearly exclude vapors from this definition. The Agency agrees that vapors are not free product and has added the term 'liquid' to the definition. Another commenter suggested a lower thickness limit of one-eighth of an inch be used as a cutoff; any layer of product with thickness lower than this should not be considered free product. The Agency does not agree with this concept because in some instances very thin layers may still be retrievable. The regulations require that free product must be removed to the maximum extent practicable as a part of the total site cleanup.

Other commenters suggested that the definition be modified to include a field criteria for use in corrective action. The Agency has chosen to not include this type of criteria because determining the presence of free product and the extent to which it can be removed depends on site conditions and the technology employed. EPA believes that it is preferable to leave this determination to the discretion of the implementing agency. This issue is discussed in more detail in section IV.F. of this preamble.

(12) Hazardous Substance UST System. "Hazardous substance UST system" means an UST system containing either (a) hazardous substances defined in section 101(14) of the Comprehensive Environmental Response, Compensation, and Liability Act of 1980 (but not including any substance regulated as a hazardous waste under Subtitle C) or (b) any mixture of such substances and petroleum that is not regulated as a petroleum UST system. Thus, the final rule, in effect, defines a hazardous substance UST system as any UST system storing regulated substances which is not a petroleum UST system. It is essentially a catchall for any UST system for which the effectiveness of petroleum release detection and corrective action technology is uncertain. By contrast, in the proposed rule, a hazardous substance tank system was defined as a system containing an accumulation of hazardous substances or a mixture of such substances and petroleum in which hazardous substances comprise greater than 50 percent of the weight or volume of the mixture. The change from the proposed to the final definition eliminates the proposed 50-percent mixture rule for distinguishing tanks subject to the petroleum release detection requirements.

Many commenters agreed with the Agency's proposal in the Supplemental Notice that a substance not found on the petroleum list but listed under CERCLA should be regulated as a hazardous substance. Other commenters felt that if a hazardous substance was a constituent in petroleum, then that substance should be regulated like petroleum when it is stored in its pure form. Other commenters stated the converse argument: That because some hazardous substances are constituents in petroleum, then petroleum should be regulated as a hazardous substance.

The final rules distinguish petroleum and petroleum-based substances from other hazardous substances or mixtures for the purposes of determining which type of release detection requirements apply to new UST systems. UST systems storing petroleum, including its natural or refinery-added "hazardous substance" constituents (and stored materials with petroleum-like characteristics), are allowed to use a wide range of release detection methods in today's rule because petroleum has chemical and physical properties that make it highly detectable and amenable to a wide array of available corrective action technologies. A hazardous substance in its pure form, however, does not necessarily retain the same characteristics when it is a constituent in petroleum. Thus, the storage of such hazardous substances in new UST systems is governed by the release detection requirements for non-petroleum regulated substances, i.e., secondary containment. In the final rule, the determination of which type of release detection requirement is appropriate at an UST storing a regulated substance is not based on the Agency's interpretation of the definition of "petroleum" or "hazardous substance." (For further discussions of the differences between petroleum and hazardous substance USTs and their associated release detection requirements, see also section IV.D.2. on hazardous substance release detection, and section III.C.3. on alternative approaches to hazardous substance UST systems.)

In the proposed rule, an UST system was regulated as either a petroleum or hazardous substance UST system based on whether "petroleum" or "hazardous substances" were stored in the system. The problem of how to regulate a mixture of petroleum and hazardous substance was addressed in the proposed definitions of hazardous substance UST and petroleum UST by the "50-percent rule." A mixture of regulated substances was subject to either the petroleum UST system requirements or hazardous substance UST system requirements depending on which of these substances comprised more than 50 percent of the mixture. At proposal, the Agency thought this was a straightforward way to decide which release detection requirements for new UST systems were applicable to a mixture or blend of petroleum and hazardous substances. After proposal, however, the Agency became concerned that this approach would prove to be unworkable because of the difficulty of measuring constituent concentrations and the uncertainty of how to address constituents of petroleum that are also hazardous substances. In addition, there is not a single percentage value that is applicable to all mixtures and blends for determining when the substance will no longer be reliably detected by one of the release detection technologies allowed under the rule for petroleum USTs, and there is a wide variation in the degree of "hazardousness" among the many substances listed in section 101(14) of CERCLA.

For these reasons, in the Supplemental Notice, the Agency considered replacing the 50-percent rule with a specific list of all substances and blends of regulated substances that would be regulated under petroleum UST requirements. Any other blend or mixture of regulated substances would be subject to hazardous substance UST requirements. Many commenters supported the proposed 50-percent rule because it was clear and because it would be difficult to list all petroleum substances. Others supported the 50-percent rule approach but recommended alternative percent values ranging from 1 percent to 50 percent. Many commenters, particularly state agencies, supported the idea of a list because it would lessen the need for determining how to regulate a particular stored mixture, and thereby decrease the burden on the implementing agencies. It was also believed to give the owner and operator clear guidelines in determining the status of blends and, therefore,

which release detection method to use. These commenters said that any percentage method would be cumbersome and difficult to enforce because it would be difficult to measure concentrations in the UST system.

After consideration of all of these comments, EPA concluded that neither a percentage rule nor a comprehensive list of petroleum or petroleum-based substances is a practical solution to the problem of how to determine which blends and mixtures of regulated substances must meet the release detection standards for new UST systems storing hazardous substances. (See the discussion concerning "regulated substance" in section IV.A.4.a. earlier in this preamble for the reasons why the Agency rejected the proposed comprehensive list approach.) The main drawback to the percent approach is the variability of a meaningful value. For example, 5-percent pesticide mixed in oil or 5-percent pentachlorophenol mixed in mineral spirits for application purposes should be stored in USTs with secondary containment and interstitial monitoring because of the high toxicity of these substances and the unavailability of highly effective corrective action technologies and release detection. In contrast, a hazardous substance such as methanol that is highly flammable as a pure product can be blended in relatively high proportions with motor gasoline and not change the flammable nature of the motor gasoline. It can be safely stored in a protected single-walled tank because release detection and corrective action technology are available for the petroleum-methanol mixture; and these methods are the same or very similar to those used for petroleum products. Thus, the appropriate percentage value to use in determining the release detection requirements that must be used at a new UST storing a mixture of regulated substances should be determined by the implementing agency based on a consideration of the following factors: The availability of reliable and sensitive release detection, the availability of effective corrective action technologies, and the inherent toxicity of the substance stored.

The final rule, therefore, does not contain a "50-percent rule" to determine how mixtures of petroleum and hazardous substances should be regulated. Rather, the final rule lists specific substances subject to the petroleum UST system requirements and uses a *de minimis* standard to determine when other mixtures of petroleum and hazardous substances are subject to petroleum UST system standards. A "petroleum UST system" is, thus, one which contains petroleum or petroleum and *de minimis* amounts of other regulated substances. Any other UST system is a hazardous substance UST system and must be provided with secondary containment or obtain a variance. The *de minimis* amount of hazardous substance mixed with a petroleum product is that amount in which the additional hazardous substance does not alter the detectability, effectiveness of corrective action, or toxicity of the petroleum to any significant degree.

(13) Hydraulic Lift Tank. "Hydraulic lift tank" means a tank holding hydraulic fluid for a closed-loop mechanical system that uses compressed air or hydraulic fluid to operate lifts, elevators, and other similar devices.

One commenter stated that the definition of this term in the proposal did not include elevator lifts. In response, the Agency changed this definition to include lifts that operate by compressed air or hydraulic fluid. This change properly includes all elevator lifts within the hydraulic lift definition.

(14) Implementing Agency. "Implementing agency" means EPA, or, in the case of a state with a program approved under section 9004 (or pursuant to a memorandum of agreement with EPA), the designated state or local agency responsible for carrying out an approved UST program.

As the definition states, section 9004 empowers the Agency to approve a state program to operate in lieu of the federal program. The state agency responsible for carrying out an approved program is the lead implementing agency for the UST program. A state may decide to work through designated local agencies to carry out the approved program. It is important to note that the local or state agency responsible for the enforcement of the UST regulations, particularly once the state program is approved, is expected to be an owner and operator's first contact in any situation involving a leaking UST system. The state and local agencies could then contact EPA if necessary.

(15) Maintenance. "Maintenance" is the normal operational upkeep to prevent an UST from releasing product. This definition has been added since proposal in response to requests by several commenters for clarification of this term. The comments and the use of this term are discussed further in section IV.C.2. of this preamble.

(16) New Tank System. "New tank system" means a tank system that will be used to contain an accumulation of regulated substance and for which installation has commenced after the effective date of this regulation.

Existing tanks that are converted after the effective date of this regulation from tanks storing non-regulated substances to tanks storing regulated substances are considered new UST systems and are required to meet new tank standards.

(17) Petroleum UST System. "Petroleum UST system" means an UST system containing petroleum or mixtures of petroleum with *de minimis* quantities of other regulated substances. Such systems include those containing motor fuels, distillate fuel oils, residual fuel oils, lubricants, petroleum solvents, or used oils.

In the proposed rule, a petroleum UST system was defined as a system that contained an accumulation of petroleum or a mixture of regulated substances and petroleum in which petroleum comprised greater than 50 percent of the weight or volume of the mixture. In the Supplemental Notice, the Agency proposed the development of a list of petroleum or petroleum-based substances subject to the petroleum UST system requirements. Based on public comment, however, the Agency has decided that it would be unworkable, time consuming, and largely unnecessary to specifically identify all possible petroleum products, petroleum-based substances, and mixtures of these substances with hazardous substances that should be subject to petroleum UST standards.

The definition for petroleum UST systems has been revised in two ways in the final regulation. The 50-percent rule for mixtures has been deleted and replaced with a limitation of non-petroleum regulated substances to *de minimis* levels. Use of this approach is intended to better determine if an UST system qualifies for the new petroleum UST release detection methods (see also definition of hazardous substance UST system). In addition, a list consisting of seven general categories of substances has been added to the petroleum UST system definition to more clearly identify the major types of petroleum and petroleum-based substances that may be stored in new protected single-walled tanks with release detection rather than only in UST systems that meet the secondary containment requirements. These categories are not substances that necessarily must be defined as petroleum under CERCLA, but instead are substances for which the Agency has determined single-walled tanks with cathodic protection and

monthly release detection are adequate to protect human health and the environment. Other mixtures of regulated substances (for example, petroleum products mixed with non-indigenous hazardous substances or contaminated petroleum products) will have to be considered on a case-by-case basis by the implementing agency, using the *de minimis* rule. The EPA anticipates that few blends and mixtures will present interpretation difficulties. See part (12) of this section for an explanation of the application of the *de minimis* rule.

(18) Pipe or Piping. A "pipe" or "piping" is any hollow cylinder or tubular conduit that is constructed of non-earthen materials. This definition has been added since the proposed rule at the suggestion of a commenter (see sections IV.B.1. and IV.C.5. of this preamble for further discussion).

(19) Repair. "Repair" means to restore a tank or UST system component that has caused a release of product from the UST system.

This term has been added since proposal in response to public comments requesting additional clarification concerning the differences between repair, upgrading and maintenance. Refer to section IV.C.5. of today's preamble for further discussion of this issue.

(20) SARA. "SARA" means the Superfund Amendments and Reauthorization Act of 1986.

(21) Sump. This term has been deleted from the final rule.

Several commenters stated that this definition was ambiguous due to the inclusion of the term "temporarily." They suggested it be removed or that an actual time be substituted. The Agency agrees and has eliminated the definition from the final rule. This definition is no longer needed because the final rule no longer contains any requirements or provisions specific to sumps.

(22) Upgrade. An "upgrade" is the addition or retrofit of some portion of an UST systems, such as cathodic protection, lining, and spill and overfill controls, to improve the ability of the UST to prevent the release of product in accordance with § 280.21.

Although this term was not defined in the proposal, it has been added at the recommendation of commenters. Further discussion of upgrading is presented in section IV.B.3. of today's preamble.

(23) UST System or Tank System. "UST system" or "tank system" means an underground storage tank, connected underground piping, underground ancillary equipment, and containment system, if any. This definition has been changed to include within the UST system only underground ancillary equipment.

Two commenters suggested that the phrase "underground piping" be defined to exclude any non-wetted piping such as vent lines. EPA does not agree with the commenters. Because such "non-wetted" piping can contain regulated substances, particularly when the tank is overfilled, EPA believes that certain requirements in this rule are applicable to this type of piping. Clarification has been added in today's rule regarding which requirements are applicable to "non-wetted" piping.

(24) Wastewater Treatment Tank. "Wastewater treatment tank" means a tank that is designed to receive and treat an influent wastewater through physical, chemical, or biological methods.

This definition has been changed since the proposal so that it no longer includes only tanks regulated under the Clean Water Act. This term now refers to any tanks that are designed to treat wastewater. Of these, only some are regulated under the CWA. This change was required due to the different regulations for CWA-regulated and non-CWA-regulated wastewater treatment tanks.

B. UST Systems: Design, Construction, Installation, and Notification

The following sections present major issues raised by public comments and new information gathered since proposal concerning the design, construction, installation, and notification of UST systems. Also, these sections discuss changes in the final rule based on these public comments and this new information.

1. Design and Construction Requirements (§ 280.20)

As discussed in the preamble to the April 17 proposal (52 FR 12695), EPA concluded that national design and construction requirements are needed for new UST systems, especially with regard to corrosion protection. In discussing general approaches to design and construction standards, EPA concluded that industry codes of practice adequately address proper design. EPA invited comments on the methods that should be used to recognize development of future codes of practice that meet the intent of the requirements of the proposed rule concerning the design, construction, and protection from corrosion of UST systems. Many comments were received by EPA on this issue.

Many commenters suggested that EPA set detailed design standards in the final rule. Some new or alternate methods for tank design, fabrication, or protection techniques were suggested. For example, a few commenters suggested that concrete tanks should be more explicitly allowed. One suggested adding unbonded polyethylene wrap as an option for corrosion protection. EPA still believes, however, that the general approach taken at proposal of relying on industry codes of practice, rather than specifying detailed regulatory standards, is more appropriate because this approach allows new and effective technologies to be developed and put into use.

In today's final rule, EPA simply requires that all new tanks be designed and manufactured according to standards of a nationally recognized organization or an independent testing laboratory. These requirements also allow the use of concrete or stainless steel tanks if the implementing agency determines that the design, construction method, and corrosion protection system would prevent the release of any stored regulated substances in a manner that is no less protective of human health and environment than tanks allowed by the requirements of § 280.20(a) (1)–(4). Specific design and construction issues are discussed in detail below.

a. *Tank Requirements (§ 280.20(a)).*

(1) Fabrication. As discussed in the preamble to the April 17 proposal (52 FR 12696), EPA proposed to require one of three fabrication techniques for tanks: Fiberglass-reinforced plastic (FRP), coated and cathodically protected steel, and steel-fiberglass-reinforced plastic composite. The allowed fabrication techniques were chosen to provide protection of buried structures from galvanic corrosion by using either a cathodic protection system or noncorrodible materials. Although comments were submitted suggesting flaws in each of the UST types listed in the proposal, the data submitted indicate excellent performance of all these protected tanks. Recent studies sponsored by EPA have yet to identify a documented case of failure by corrosion of these protected, "new generation" tanks having in-service ages of up to 30 years. Therefore, today's rule is unchanged with respect to these new tank fabrication requirements.

Information obtained by the Agency since proposal on performance of each of the three fabrication techniques specifically allowed in the final rule is briefly summarized below. Additional discussion is presented earlier in the Causes of UST Releases section of today's preamble.

FRP Tanks. Nearly 200,000 FRP tanks have been installed nationwide, with

some as old as 22 years old. There were some failures of these tanks when first introduced; however, modification of installation practices and tank design has reduced the annual failure rate to less than 0.05 percent. If the tank fails, failure usually occurs soon after installation and is due to improper installation.

Coated and Cathodically Protected Tanks. Approximately 100,000 of these tanks have been installed at UST sites. Though some of the tanks are over 20 years old, the majority have been installed within the last 5 years. There have been very few failures of these systems to date. None of the failures have resulted in a warranty claim. The few failures that did occur were due either to improper installation practices or to not following monitoring procedures correctly. Cathodic protection technology has been widely applied to pipelines and other buried metal structures for over 30 years. A dramatic reduction in failures has resulted from the use of cathodic protection on pipelines.

Composite Tanks. This tank type is not as popular in this country as the other types of protected tanks, but has been widely used in Europe. Approximately 65,000 composite tanks have been installed in the U.S. and have been in use for about 25 years without a single reported corrosion-related failure. The current manufacturing standards for these tanks are much more stringent than they were in the past. Even though there is not as much historical performance data on composite tanks as there is for FRP or coated and cathodically protected tanks, EPA has confidence in their future performance because of the fault-free performance of the older tanks of this type and the more stringent manufacturing standards that are now in use.

(2) Corrosion Protection—Corrosion Experts. EPA proposed in § 280.20(a) that field-installed cathodic protection systems should be designed by an independent corrosion expert. The Agency requested comments on the merits of this approach, and several comments were received by EPA on this issue. Most of the comments strongly opposed the requirement of an "independent" corrosion expert because they felt that this requirement would place an unnecessary financial burden on owners. In addition, they pointed out that the term "independent" should not be required because very few independent corrosion experts are available. Some suggested that the term "independent" should be replaced with "certified" or "qualified." Others suggested the use of "in-house" expert because an "in-house" corrosion expert would have better working knowledge of the systems to be protected, condition of use, and the surrounding environmental condition.

Although no clear evidence was submitted to indicate that corrosion protection systems that are designed by independent experts would perform better or worse than systems designed by non-independent experts, information obtained from public comments indicates that relatively few independent corrosion experts are available to fulfill the large demand for system designs. In the final rule, EPA has, therefore, deleted the requirement that the corrosion expert must be independent. Thus, the use of in-house personnel is acceptable provided that they meet the definition of "corrosion expert."

Composite Tanks. In the preamble to the proposal (52 FR 12698), EPA invited comments, standards, and documented performance data for FRP-steel composite tanks (also called "clad" tanks). Several comments were received by EPA on the issue of whether or not cathodic protection is needed for composite tanks.

EPA believes that cathodic protection for this type of tank is not needed because the exterior of the steel tank is bonded to a thick fiberglass shell that has inherent corrosion resistance properties. EPA was unable to identify one case where this type of tank has failed due to corrosion and also noted that one major manufacturer of this type of tank recently began to offer lifetime guarantees from failure for its tanks. Thus, in the final rule, EPA has retained the provision that, as long as these tanks are designed and manufactured according to a recognized national standard of practice, FRP-steel composite tanks do not require cathodic protection.

At proposal, industry codes for composite tanks were still in draft form. Commenters suggested that composite tanks should be excluded from the final rule until UL 1746 is final. EPA disagrees with this comment because manufacturers are now being approved under this standard in its draft form. Moreover, EPA has amended the rule to reference a new industry consensus design standard, ACT-100, "for the fabrication of FRP clad or composite underground storage tanks" submitted by a commenter. Accordingly, EPA has concluded that it is unwarranted to delay allowing the use of composite tanks given their outstanding performance to date and the availability of the ACT-100 design standard and the draft UL 1746 performance standard.

No 12,000 ohm/cm Exclusion. As discussed in the preamble to the April 17, 1987, proposal (52 FR 12698), EPA had proposed dropping the 12,000 ohm/cm exclusion for underground tanks contained in the Interim Prohibition (see section 9003(g)(2) of RCRA). As stated in the proposal, this measurement alone does not adequately define a soil's propensity to corrode. Soil resistivity varies with depth and moisture content, and corrosivity has been demonstrated in soil with a 30,000 ohm/cm reading.

Many comments were received by EPA on this issue. Some requested that EPA retain the 12,000 ohm/cm exclusion in the final rule. Others agreed with the proposed approach stating there is no technical basis to establish a single number by which the corrosivity of all soils can be measured. EPA continues to believe that use of a single resistivity variable is inadequate to measure the propensity to corrode. Therefore, EPA has decided not to include the 12,000 ohm/cm exclusion in the final rule.

Some commenters suggested that there are situations where the surrounding soils are not corrosive and requested that a mechanism for relief from the corrosion protection requirements be provided for those situations; for example, a soil that is uniform and very dry (low moisture content), where the ground-water table continuously stays several feet below the bottom of the UST installation, and the area above the installation is paved to prevent percolation of rainfall and runoff. EPA agrees with these commenters and is including § 281.20(a)(4), which allows an exemption for metal tanks from the requirement that all UST systems be corrosion protected provided that a corrosion expert determines that the site is not corrosive enough to cause a release during the tank's operating life. In addition, owners and operators must retain records of this determination for the operational life of the tank. These records should include evidence of the corrosion expert's qualifications and the results of the site assessment.

Alternative Designs. In the proposed rule (§ 280.20(a)(4)), other tank designs are allowed if the implementing agency determines them to be no less protective of human health and the environment. In response to the proposal, commenters requested approval for several types of tanks including those constructed of concrete, stainless steel, and steel encased in polyethylene. Several other commenters reported to the Agency

other potentially useful designs such as nylon tanks.

As a result of these comments, EPA sought information on several of these alternative designs and continues to believe that, with certain materials of construction and under certain site-specific soil conditions, alternative systems can be designed that will adequately protect human health and the environment. In addition, EPA is aware of new design techniques being researched that appear promising but are not commercially available. The Agency does not desire to restrict or eliminate emerging technologies and recognizes the numerous site-specific factors that may allow for the use of alternative designs. Therefore, today's rule continues to provide that the implementing agency may approve alternatives that are no less protective of human health and the environment than the specified designs.

The Agency has not, however, added any of these alternative designs to the designs specifically allowed by the regulation because there is not enough documented history about the performance of these systems or industry consensus codes governing their fabrication and use. One system, for example, consists of a steel tank surrounded by a thick, high-density polyethylene "jacket." The "jacket" is intended to provide both corrosion protection and secondary containment. It has been reported to EPA that over 1,000 of these tanks have been installed. Some local and state implementing agencies have been approving this design. Sometimes, specific monitoring or demonstrations have been required to ensure that the design provides protection equal to that provided by the other types of protected tanks. It has also been reported that several manufacturers of this type of tank have begun the process of working with independent testing laboratories toward developing testing and evaluation methods for steel tanks encased in noncorrodible secondary containment structures. This process may take several years to complete however. The Agency does not wish to unduly restrict the use of this type of product in the interim and recognizes that the manufacturers need to have continued product sales to be able to fund the needed development and testing of these evaluation methods. Thus, EPA views the type of approval allowed under § 280.20(a)(4) as essential to the continued development of such new tank systems. For example, the long-term performance of a system is difficult to establish in the absence of allowing actual installations in the field. Accordingly, the final rule preserves the proposal's allowance of the use of alternative new designs as long as they are approved by implementing agencies to adequately protect human health and the environment.

Implementing agency approval of alternative new tank designs, or special designs for specific sites, will only be provided if the UST system is determined to be no less protective of human health and the environment than the other types of tanks already listed in today's rule. Accordingly, an alternative design must meet the two basic criteria that all of the other methods meet: (1) It must be designed and constructed to prevent releases due to structural failure for the operating life of the system, and (2) it must be designed to prevent releases due to corrosion for its operating life. For example, the "jacketed" tanks described earlier obviously meet the structural criteria because each inner steel tank is built to the U.L. 58 standard. These types of tanks are also designed to prevent releases due to corrosion because the secondary containment jacket isolates the steel tank from the surrounding soil. However, in the absence of an existing consensus code applicable to the jacket, or a long-term performance record, it is difficult to determine if releases due to corrosion will be prevented for the tanks' operating life. Thus, the implementing agency could allow the use of this type of tank if a national consensus code is eventually developed for the jacket or this outer jacket is determined to be free of holes at least as frequently as cathodically protected tanks are checked (after installation and every 3 years thereafter). The integrity of this outer jacket can be ensured in several ways, including several methods of interstitial monitoring or the periodic performance of a tank structure-to-soil potential measurement by a cathodic protection tester.

b. *Piping Requirements (§ 280.20(b)).* The proposed rule (52 FR 12698) required the same corrosion protection for piping systems as used for the underground storage tank itself. Two types of protection systems were allowed: fiberglass piping, or coated and cathodically protected steel piping. The same as for the tanks, provisions for approval of alternative piping methods were also proposed. Today's rule remains largely as proposed, although the requirement for an "independent corrosion expert" has been revised to delete the requirement for independence, and an option for approval of alternative designs by a corrosion expert has been added. These issues are discussed below. In addition, the extent of corrosion protection of components and possible alternate materials of construction were highlighted as issues in the proposal for public comment and are discussed in detail below.

(1) Independent Corrosion Expert. EPA proposed in § 280.20(b) that steel piping coated and cathodically protected with a field-installed cathodic protection system must be designed by an independent corrosion expert. The Agency requested comments on the merits of this approach. Several comments were received by EPA regarding the need for an independent corrosion expert concerning the protection of steel tanks. (See section IV.B.1.a.(2). for a discussion of this issue.) In response to these comments, EPA has removed the requirement that the corrosion expert must be independent.

(2) Corrosion Protection of Tank System Components. The Agency invited comments on which tank components, if any, should be cathodically protected and, if cathodic protection is not required, what form of corrosion protection is appropriate. Several comments were received by EPA on this issue. Some suggested that EPA should require cathodic protection on FRP-steel composite tanks as well as any steel fittings on FRP tanks. Some suggested that all metallic components of the UST system, including metallic connectors, swing joints, flexible connectors, and riser connections should be coated or cathodically protected. Other commenters suggested that cathodic protection on steel fittings on FRP tanks is unnecessary and that components like bung hole plugs and pump housings do not need cathodic protection.

EPA agrees with the commenters who stated that cathodic protection of tank fittings is not needed because these components are located at the top of the tank and rarely contact the stored product. Section 280.20(a) of the final rule has been modified to restrict the applicability of the corrosion protection requirements to "any portion underground that routinely contains product."

EPA's causes of release study indicates that the operational piping portion of UST systems is twice as likely as the tank portion to be the source of the release. Piping failures are caused equally by poor workmanship and corrosion. Threaded metal areas made active by threading have a high propensity to corrode if not coated and

cathodically protected. Today's rule specifically requires the corrosion protection of operational underground piping and components that are in contact with the soil and convey product to or from the tank (e.g., flexible connectors, swing joints, pipe fittings, and impact valves), whether in metallic or FRP piping runs. Nonoperational components, such as vent and vapor recovery lines, on the other hand, need not have corrosion protection because these components should never contain free liquid product, particularly under today's requirements for overfill prevention (see § 280.30). Metallic components, such as swing joints, do not need cathodic protection if they are placed in pump housings and are not in contact with the ground.

The Agency also invited suggestions on the use of pipes other than FRP and corrosion-protected steel pipe. One commenter suggested use of copper tubing. Today s rule allows copper tubing under two circumstances. First, copper piping would be allowed if a corrosion expert determines that the site is not corrosive enough to result in a release during the operational life of the piping. Second, copper piping would be allowed if the design and construction methods and corrosion protection are determined by the implementing agency to prevent the release of any stored substances in a manner no less protective of human health and the environment than the requirements in § 280.20(b) (1), (2) and (3).

c. *Spill and Overfill Control (§ 280.20(c)).* Design and construction requirements for new UST systems include spill and overfill equipment requirements. These additional requirements are discussed below in section IV.C.1., "Spill and Overfill Control."

d. *Other Issues. (1) Internal Corrosion.* In the preamble to the April 17 proposal (52 FR 12699), EPA solicited comments on whether internal corrosion could become a major source of failure. EPA requested comments based on the industry's field experiences with internal corrosion protection systems in terms of design, installation, efficacy of performance, and problems found. EPA also requested information on the need for internal corrosion protection and whether it should be required, particularly for all new steel UST systems.

The Agency has received several comments on this issue. Many expressed the opinion that internal corrosion is one of the causes of tank leaks. Some suggested mandating internal tank lining to reduce or to eliminate internal corrosion and thereby prevent leaks. Some suggested that EPA require the use of striker plates below fill and gauge fittings. A few suggested requiring the use of soft-tipped inventory dipsticks. Some commenters took the position that internal corrosion is not a problem and should not be regulated.

EPA agrees with the commenters who argued that tank lining will reduce the incidence of failures resulting from internal corrosion. The Agency is not, however, mandating the requirement of tank lining on new tanks because it has concluded that striker plates, now required under the consensus codes, solve the problem. At present, evidence is limited concerning the potential of internal corrosion to cause newly constructed tanks to fail. Estimates of the incidence of internal corrosion-induced tank failures range from 5 to 60 percent of the total steel tank population. Several tank lining companies submitted data that indicate internal corrosion is a significant cause of release. By contrast, internal corrosion was not found to be a significant cause of release in an EPA-sponsored study of over 400 tank closures carefully investigated by Suffolk County, New York, health department officials. The results of this study and other information lead the Agency to believe that the incidence of steel tank failures due to internal corrosion is probably less than 10 percent of the total tank universe, that it occurs most often in smaller tanks, and that it takes place later in the operational life of these tank systems. The few cases of internal corrosion holes that were witnessed in this study appeared to be generally located at the bottom of the tank fill pipe opening and often could have been prevented if striker plates had been used. These findings are corroborated by numerous tank manufacturers who submitted comments on the proposal, citing their collective experiences that internal corrosion is not a problem on tanks equipped with striker plates. Many of them suggested that the use of striker plates below the fill and gauge fittings will protect the primary location where internal corrosion occasionally breaks through.

EPA agrees with the commenters who believe that striker plates can largely eliminate the internal corrosion problem. The final rule, however, does in effect, require the use of striker plates because they are standard on new steel tanks and included in the referenced codes of practice developed by nationally recognized associations or independent testing laboratories. The Agency agrees with commenters who suggested that the use of soft-tipped dipsticks will also reduce internal corrosion. The final rule does not, however, include this alternative because it is not needed with striker plates now standard on all tanks.

(2) Manways. The Agency requested comments and information about the required use of manways on top of new tanks and whether traditional "bunghole" systems of tank entry would result in a significant reduction in releases. Several comments were received by EPA on this issue. Commenters were divided on the requirements of manways. Some of them felt that manways do not reduce the number of leaks, but may instead add another potential source of release. Some felt that the requirement of manways is necessary because a number of costly release investigations can be avoided by manual inspection from inside a tank. A few commenters supported manways but felt that their use should not be mandated.

EPA agrees with the commenters who recommended manways as a sound practice but believed they should not be required in the final rule. Although manways facilitate the manual inspection of the interior of a tank, other forms of release detection make internal inspections and, thus, the use of manways unnecessary (see discussion in section IV.B.2.g.(2). concerning internal inspections and release detection).

2. Installation (§§ 280.20 (d) and (e))

a. *Overview.* As was discussed in the preamble to the April 17 proposal (52 FR 12700–12702), improper installation is often a cause of release from various components of the UST system. The public comments on the original proposal and on the Supplemental Notice (December 23, 1987) have reinforced the belief that proper installation is critical to preventing releases from the UST system. The new causes of release information obtained by the Agency since proposal (which is discussed in section II.F.2. of this preamble) indicates that improper installation is one of the major causes of underground storage tank and piping failures. Additionally, the majority of industry experts felt that improper installation causes many of the piping failures. Though the reported failure rates of FRP and protected-steel tanks are very low, failures that have occurred are usually related to improper installation.

Some of the installation practices that have been identified as leading to UST system releases include: Non-homogeneous backfill, which is often

cited as causing localized corrosion of unprotected steel tank system components; improper selection and placement of backfill, which leads to structural failure in FRP tanks; loose fitting in the bungs and vent lines, which leak when the tank is overfilled; and improper layout, fabrication, and installation (backfill placement and inadequate cover) of the delivery piping, which can lead to loose or broken pipe and fittings.

The proposed rule addressed these installation problems in § 280.20 (c) and (d). Section 280.20(c) listed the specific requirements for conducting a proper installation. Section 280.20(d) required owners and operators to indicate on the notification form how proper installation was ensured. The comments and revisions for the final rule on both of these sections are discussed in more detail below.

b. *Installation Practices.* EPA proposed in § 280.20(c) that all tanks and piping be installed in accordance with the manufacturer's instructions and nine specific requirements that were based on the major installation steps outlined in two industry codes: Petroleum Equipment Institute RP100–88 and American Petroleum Institute 1615. The Agency requested comment on this approach, in particular the use of a final system test, after backfill is placed around the storage system but before it is placed into operation, to ensure proper installation.

Comments were received that supported the proposed approach. Many commenters, however, suggested refinements or exceptions to several of the nine specific requirements. In addition, the industry consensus codes from which the nine requirements were derived have been revised and reissued since the proposal. These two codes are now in substantial agreement, and their recommended practices are reported to be widely used by installers. One of the reasons that the Agency included the nine specific installation provisions in the proposal was to emphasize certain important basic points already set forth in the national consensus codes.

EPA now believes that the recently revised codes addressing proper installation practices are even closer in representing a national consensus and provide appropriate guidance for proper installation. The nine specific requirements have, therefore, been deleted from the final rule as unnecessary and are replaced with a more general performance standard (in § 280.20 (d) and (e)) that simply requires that owners and operators ensure that the UST systems are installed in accordance with nationally accepted codes of practice and the manufacturers' instructions (if any).

An example of an installation practice that requires the consideration of both the national consensus codes and the manufacturer's instructions is the joining of FRP piping to metallic components. The consensus codes provide general guidance concerning where and how to make such joints, but the two major FRP piping manufacturers provide specific instructions concerning the details of fabricating this type of joint.

c. *Ensuring Proper Installation.* EPA proposed in § 280.20(d) that owners and operators indicate from a list of methods on the proposed notification form which method they used to ensure proper installation. Also, proposed § 280.20(d) required that owners and operators obtain the installer's signature certifying which method was used to ensure proper installation. EPA requested comment on the advisability of requiring owners and operators to use one or more of these methods and the relative merits of each method.

In general, all comments supported EPA's contention that requirements for ensuring proper installation are warranted. Each approach that EPA had identified to ensure proper installation was favored by at least one commenter. No data were submitted to EPA in response to the proposal that showed any of these methods to be unworkable, ineffective, or preferred over all the others. Therefore, all but one of them have been retained in today's final rule, and they have been renumbered as § 280.20(e).

The one method that has been deleted from the final rule was the testing for leaks during and after installation. This method was deleted because all national consensus codes for installation require such testing during and after installation and thus this testing is part of proper installation under § 280.20(d), and not an optional method of certification as required under § 280.20(e).

Other methods of ensuring proper installation were suggested by commenters. The first suggestion was to certify owners. Although the certification of owners could improve installation practices, the Agency is concerned that the implementation of an education and testing program of this magnitude would be very difficult to accomplish and not likely to be very effective, because owners do not usually install their own tanks. Some commenters suggested that EPA develop a national installer certification program. EPA believes, however, that implementing such a program at the national level, particularly given the large number of installers necessary, would be unworkable and would delay implementation of this rule. Also, the fact that proper installation can be effectively ensured by a variety of approaches makes a national program for certification of installers unnecessary. EPA believes that state and local governments are in a much better position to develop such programs as they deem necessary.

Some commenters suggested requiring certification of installers by a professional organization. EPA is not aware, however, of any professional association that is in a position currently to certify the large number of installers expected to be needed in the following years and, therefore, has not required such certification in the final rule.

Section 280.20(e) of the final rule requires owners and operators to indicate on the notification form which method for ensuring proper installation was used. Although EPA believes that the use of one or more of the methods allowed (i.e., manufacturer or implementing agency certification of the installer; inspection of the installation by a professional engineer or the implemental agency; completion of manufacturer's installation checklist; or another method as approved by the implementing agency) will improve installation practices, today's allowance of a variety of methods will give owners, operators, and implementing agencies flexibility to choose the most appropriate methods.

EPA has also retained the requirement in the final rule that owners and operators obtain the installer's certification that the installation was properly performed. Thus, § 280.22(f) of the final Notification Requirements requires owners and operators to have the installer certify on the notification form that the UST system was installed in accordance with the performance standards of § 280.20(d). A signature block is provided on the notification form for the installer. EPA intends that owners and operators will obtain the signature of the person primarily responsible for the installation of the tank and piping system. In cases where the owner functions as the general contractor, hiring several parties to conduct the tank and piping installation, then the owner could be considered the installer.

In the proposal preamble, comments were requested on the advisability of requiring a site plan and, if it were required, what level of detail was necessary. Most commenters favored the requirement for a site plan but

differed on the level of detail required for the plan. Some commenters favored a simple sketch and others favored an engineering drawing that would locate the tanks and the piping, indicate the sizes and routing of the piping, and indicate the location of structures on the site. Information obtained from the "Causes of Release Study" (see section II.F.2. of today's preamble) indicates that site plans are prepared voluntarily by most major corporations and are required in some jurisdictions when applying for building permits.

The Agency has determined that it will not make site plans a required record because it is not necessary to ensure compliance with the technical requirements promulgated today. A site plan is, however, a useful tool for owners and operators. The Agency notes that site plans are recommended in recent updates of national codes addressed to the installation of new UST systems.

3. Upgrading of Existing Systems (§ 280.21)

EPA proposed in § 280.21(a) that, within 10 years after the effective date of the final rule, all existing UST systems comply with the requirements for new UST systems under § 280.20 and have a field-installed cathodic protection system designed by an independent corrosion expert. If these requirements could not be met, these UST systems would have to be closed. The Agency requested comments on these proposed requirements and the need for upgrading UST systems to prevent releases (see 52 FR 12702–12705).

a. *Mandatory Upgrading Schedule. (1) Overview.* EPA concluded in the proposal (52 FR 12702–12704) that the universe of 1.4 to 2 million existing UST systems presents a significant threat to the public health and environment from product releases due to spills, overfills, and corrosion of unprotected steel tank systems. Presently, the majority of existing UST systems are not equipped with any of the release prevention or detection features that were proposed. The Agency also concluded that if these existing systems were retrofitted with safeguards proposed for new UST systems, a significant number of product releases could be prevented or minimized.

EPA proposed two different schedules for implementing UST system upgrades: One for installation of release prevention (corrosion protection and spill/overfill controls), and another for release detection.

- Corrosion protection (which would consist of cathodic protection for bare steel tanks, for example), and spill and overfill controls were proposed to be installed at all existing UST systems within 10 years (see 52 FR 12774 and 12779).
- Release detection at unprotected and protected existing UST systems was proposed to be phased in at 3 and 5 years, respectively, with monthly release detection monitoring proposed for all UST systems after 10 years.
- UST systems that could not implement a reliable and effective release detection method, or that did not meet upgrade requirements for corrosion protection and spill and overfill controls within the required time frames proposed were to be replaced (to meet new tank standards) or permanently closed.

The proposed implementation schedule for release detection has been changed in the final rule to require existing UST systems to phase in release detection based on age over the first 5 years after the rule's effective date. (Further discussion about the Agency's rationale for changing this proposed requirement is presented in section IV.D.3. of today's preamble.) In today's final rule, the Agency has retained the proposed requirement that all substandard existing UST systems be closed, replaced, or retrofitted with corrosion protection and spill and overfill control equipment within 10 years after the rule's effective date. The final requirements concerning the upgrade of corrosion protection and spill and overfill controls (indicating public comments on this issue) are discussed below. The schedule issues are discussed first, followed by the upgrading methods.

(2) Approaches to Today's Rule. During development of the proposed rule, the Agency considered several approaches and requirements for scheduling upgrade and replacement of existing substandard UST systems, including: rapid upgrade and replacement (e.g., within 3 to 5 years), gradual upgrade and replacement (within 6 to 12 years), and no required upgrade and replacement of existing UST systems. EPA selected the gradual approach, proposing that all existing UST systems storing regulated substances be required to either upgrade to new tank standards within 10 years (through retrofitting or replacement) or be permanently closed.

Many commenters, including several segments of the UST service industry, supported the 10-year upgrade period, believing that this is a reasonable time frame to allow their industry to respond to the large universe of existing tanks that will need to be upgraded, replaced, or closed. As discussed in the preamble to the proposal (52 FR 12704), one important advantage of this approach is that it appears to complement current industry trends towards upgrading or replacing voluntarily, while setting a clear target date by which all upgrades and replacements must be completed. This approach provides flexibility to implementing agencies by allowing them to choose from numerous alternative phase-in approaches (e.g., based on tank age, tank type, or environmental vulnerability of the site) the most appropriate and applicable method to achieve an orderly transition in meeting the 10-year compliance deadline. In summary, both EPA and many commenters believe that the proposed 10-year compliance period will provide time that is adequate to implement the required improvements at the 1.4 to 2 million UST systems nationwide.

Other commenters stated that the 10-year mandatory upgrade period is too ambitious and should be relaxed (or lengthened) for those owners and operators with multiple tanks, with financial limitations, or in states where upgrade/replacement programs have already been implemented. EPA continues to remain unconvinced, however, that extending the proposed compliance period will significantly lessen the burden on multiple tank owners or on owners and operators with limited financial resources because if bare steel tanks are allowed to continue operation after 10 years, many will eventually leak and require corrective action that is much more burdensome than upgrading. EPA also expects that most UST owners and operators will make the decision to upgrade or replace existing UST systems within 10 years anyway (see 52 FR 12671). For example, many owners and operators will choose to conduct their upgrades prior to implementation of release detection (within the first 5 years) because it is more cost effective and practical to implement all required upgrades at a site at the same time, *before* the tank system leaks.

Many owners and operators are currently upgrading or replacing their existing UST systems in response to pressures other than Federal regulatory requirements (for example, voluntary upgrading programs, insurance and liability concerns, and State and local upgrading requirements). For this reason, some commenters suggested that the 10-year mandatory upgrade requirement is unnecessary and should be deleted from the regulations. The Agency agrees that these positive upgrading and replacement trends will

probably continue over the next several years, even without a regulatory requirement. EPA is concerned, however, that reliance only on these voluntary activities, without the added incentive of a regulatory deadline, will result in a significant number of UST systems not being upgraded or replaced over the next 10 years. EPA has concluded that this is a situation that would not protect human health and the environment nationwide.

Some commenters supported a phase-in period that is more rapid than the proposed 10 years because the longer it takes to upgrade, the more releases to the environment that will occur, posing additional risk to the public health and environment. More than half of all existing UST systems are over 10 years old and constructed of unprotected, bare steel without any spill and overfill prevention equipment. EPA's information on causes of release (see earlier discussion on causes of release) confirms that these tank systems are the most likely to have releases due to corrosion, piping failures, and spills and overfills. Therefore, the Agency recognizes that a more rapid upgrade schedule will, at least theoretically, prevent a significant number of release incidences that may occur at existing substandard UST systems.

Other information obtained by the Agency during development of the proposal (see 52 FR 12704), however, indicated that not even the most aggressive State, local, or industry UST programs have required upgrading or replacement in as short a timeframe as 3 to 5 years because it is universally accepted as unimplementable given the nature and size of the regulated community. The Agency believes that a mandatory, rapid upgrading approach could not be successfully implemented because a large portion of the regulated community consists of small businesses that, if faced with a shorter deadline, would continue their substandard operations resulting in widespread noncompliance. Thus, while a shorter upgrade period appears theoretically advantageous in terms of the environmental and health risks avoided, EPA has concluded that it is unlikely to genuinely achieve more protection of the public health and environment than the proposed approach because it is unimplementable by significant portions of this regulated community.

Many commenters (those supporting the proposed 10-year mandatory upgrade period, as well as the other approaches) recommended that UST system upgrades and replacements be phased in using a staggered approach over the upgrading period. They believe that this would lessen the burden on the UST service industry by preventing numerous owners from waiting until the end of the 10-year compliance period to complete their upgrades or replacements. Tank age was the factor most frequently suggested as the basis for phase-in of UST system upgrades because of the belief that older UST systems have the greatest probability of leaking due to corrosion. Others suggested that the corrosive nature of a site, the presence or absence of corrosion protection, or the environmental vulnerability of an area should be used as the basis for determining the upgrade schedule.

Given the enormous size of the existing UST system universe and the practical implementation difficulties that owners and operators face as they upgrade necessary improvements to prevent future releases, EPA agrees that the implementation of the upgrade/replacement requirements should be phased in. The Agency decided, however, not to require the phase-in of UST system upgrades or replacements based on tank age or any other factor in the final rule for several reasons. First, EPA believes that numerous UST systems will be upgraded or closed over the next 10 years even in the absence of any Federal deadline in the regulations. Upgrading programs are already well underway in numerous companies, and more are expected to begin nationwide in response to these regulations. As discussed earlier in the background section of this preamble, numerous system closures will also occur because of this new regulatory program. Thus, EPA has concluded that only a portion of the existing UST system owners and operators are likely to wait until the end of 10-year compliance period to complete their upgrades or replacements. Second, upgrading or replacement represents a significant undertaking for UST system owners and operators and the Agency has identified many appropriate factors (including, for example, tank age, site location, and other business-related reasons) already being successfully used by owners and operators to schedule replacements/upgrades. In an attempt to stimulate scheduled actions and company programs in this area, the Agency does not want to artificially restrict them to phase-in programs based on age. Third, the Agency has concluded that a simple deadline provides a clear national goal, and that this is all that is necessary to prompt the required upgrading/replacement actions over the 10-year period. Finally, today's approach of a 10-year deadline provides implementing agencies with the freedom to decide whether State or local UST programs should have a scheduled phase-in period and, if so, the methods they will use to do it.

Finally, some commenters recommended that EPA provide variance procedures in the final rule that would enable the avoidance (or delay) of implementation of the upgrading requirements for owners and operators who show reasonable progress in upgrading, for those lacking financial resources to upgrade, for protected tanks installed prior to final rule promulgation, and for States where UST upgrade programs have already been implemented. The use of such variances in the final rule was rejected, however, because the Agency believes that where upgrading has been allowed to be phased in over 10 years, there is no justification for further delay in bringing substandard systems into compliance with requirements necessary to ensure protection of human health and the environment.

b. *Tank Upgrading Methods for Corrosion Protection (§ 280.21(b)).* Today's final rule allows three methods of tank upgrading for corrosion protection, as suggested by a number of commenters. EPA believes that each of the upgrading methods described below has been demonstrated to be protective of human health and the environment.

(1) Interior Lining. The first of the options for upgrading a tank is to internally line the tank in accordance with the tank repair provisions of § 280.33. To use this technique as the sole method for meeting the corrosion protection upgrade, the tank must be internally inspected after 10 years and every 5 years thereafter. The inspection must be conducted in accordance with a code of practice developed by a nationally recognized association or independent testing lab to ensure that the lined tank is performing adequately. Interior lining used as the sole method for corrosion protection is not regarded as a permanent upgrade, but is adequate if it continues to meet original lining design specifications as determined by periodic inspections. If the lined tank does not meet the original design specifications, it no longer meets the upgrading requirements and, if it cannot be repaired in accordance with industry codes, it is subject to the unprotected tank requirements and must be replaced after 1998.

Numerous comments were received suggesting that the use of internal tank lining of existing UST systems should be more clearly allowed as an upgrade

option. Data submitted by the commenters and data developed by EPA since proposal indicate that lined tanks rarely cause releases to the environment, even in the absence of external corrosion protection measures. Tank lining has been reported by lining companies as already having been used to repair or prevent releases in over 300,000 heating oil tanks and over 70,000 motor fuel tanks during the last 25 years. Last year, an EPA-sponsored study of UST programs outside the U.S. revealed that internal lining of tanks has been in wide use in Europe and Canada for the past decade. At least one major insurer of USTs in the U.S. requires that unprotected steel tanks over 15 years of age be lined as a preventive measure for internal corrosion.

Several experienced tank operators commented that if steel tanks are properly lined their life can be extended for at least 10 years with leak-free performance. They noted significant economic and operational advantages to lining alone as an upgrade (e.g., it avoids the need to reinstall the tank and can be done relatively quickly), and they suggested that EPA allow tank lining as an upgrade option. EPA now believes that either tank lining alone or tank lining combined with external cathodic protection is a reliable upgrade measure. Accordingly, the final rule has been revised to more clearly indicate that these are acceptable upgrade options under specific guidelines and requirements.

EPA also agrees with commenters that internal corrosion is a potential problem for tanks in the future but does not believe enough evidence is available to suggest that requiring tank lining for all steel tanks is warranted at this time. Although commenters submitted data that demonstrated the existence of internal corrosion, there were conflicting views as to its frequency and causes and the severity of its effects. Some commenters stated that all tanks more than 15 years old should be lined because of the potential for failures due to internal corrosion. Other commenters stated that modern fuels and tank management practices have virtually eliminated internal corrosion.

As previously addressed in the discussion of internal corrosion under the new tank standards (section IV.B.1.d.), EPA believes that most internal corrosion incidents have been due to dip-sticking tanks without striker plates. Now that striker plates are standard equipment on tanks, the problem of internal corrosion for newer tanks has been substantially resolved. In the final rules, tanks over 10 years of age must be either internally inspected or lined to meet the upgrade requirements. If internal corrosion is occurring, the internal inspection will detect it. The lining codes require the installation of striker plates. Although EPA will continue to study this potential problem in the coming years, the final rule does not require internal corrosion protection practices beyond what is now contained in industry codes.

(2) Cathodic Protection. A second option for upgrading a tank is cathodic protection. Section 280.21(b)(2) describes requirements for upgrading an existing UST by cathodic protection. The cathodic protection system must meet the requirements for new tank systems, except that the tank and piping do not need to have an external dielectric coating. These cathodic protection requirements for existing USTs were included in the proposal and were supported by the commenters. Several commenters, however, expressed concern that not all existing USTs are sound enough to be upgraded.

Concern was expressed over allowing cathodic protection retrofits on old tanks that could have one of the following: Plugged corrosion holes (see new causes of release information in section II.F.2. of this preamble); severe external pitting corrosion that leaves a lower margin of safety in the event that the cathodic protection system fails; and internal corrosion. The Agency agrees with these commenters that only sound tanks should be upgraded with cathodic protection and is including inspection and testing requirements for upgraded tanks in the final rule. Review of industry standards for internal inspection to assess the need for repair of USTs has convinced EPA that tanks can be safely upgraded if these industry standards are followed.

There are three ways to ensure that tanks are safely and correctly upgraded with cathodic protection. First, tank tightness testing may be used to judge the structural integrity of newer tanks that are upgraded with cathodic protection, because EPA has concluded that newer tanks are much less likely to have corrosion holes than older tanks. This option for tank tightness testing may be used only on tanks under 10 years of age. EPA concluded in "Causes of Release from UST Systems" that corrosion breakthrough is unlikely in unprotected tanks under 10 years of age.* For example, in one study less than 2 percent of tanks tested which were under 11 years of age were found to be leaking. Tightness testing will, therefore, adequately identify the few younger tanks that may be currently leaking or have corrosion holes. However, the younger tanks must be tightness tested *twice*. The first tightness test must be performed before the installation of cathodic protection to ensure that the tank is not currently leaking. The second tightness test must be performed between 3 and 6 months after the initiation of cathodic protection to ensure that the cathodic protection has not opened any holes that were previously plugged with corrosion products. Information obtained from EPA-sponsored expert panels and public comments indicated that corrosion holes often do not leak because the corrosion byproducts plug the holes. This information also indicated that cathodic protection can cause these "rust plugs" to loosen and begin leaking soon after the protection is applied. Although EPA does not have data on how often this loosening occurs, this phenomenon appears to have occurred in a few cases when cathodic protection was applied to gas pipelines. EPA believes that performing a second tank tightness test 3 to 6 months after cathodic protection is applied will usually detect this type of leak before significant releases occur.

A second way to ensure this type of upgrading is successful is to use monthly monitoring. Like the tightness testing option, this method may be used only on tanks under 10 years of age. EPA believes that very few tanks under 10 years of age will leak after cathodic protection has been installed. The Agency believes, however, that some method of assessment is needed to protect human health and the environment in the unlikely event that an unsound tank is retrofitted with cathodic protection. As discussed in section III.D. of this preamble, monthly release detection provides highly reliable indications of tank integrity.

A third method applies to older tanks. For tanks 10 years of age and older, these two methods above (either a pair of tank tightness tests or monthly release detection monitoring) are inadequate to ensure structural soundness before the cathodic protection system is installed. These older tanks must instead be internally inspected and assessed. As described above, unprotected tanks often corrode through but do not leak because the corrosion product, backfill, and interior sludge seal the hole. EPA concluded in "Causes of Release from UST Systems" that about 50 percent of the corrosion holes in tanks are plugged and do not leak. The study also showed that approximately 7 percent of the tanks of 12 to 15 years of age leaked. EPA has concluded from these data that as many

as 7 percent of existing USTs are corroded through, but not leaking. Many more existing tanks may be heavily corroded and not suitable for cathodic protection alone as an upgrading measure.

EPA understands that several firms that offer cathodic protection upgrade services use other methods to ensure that the tank is structurally sound before this upgrade option is recommended. These procedures appear to vary somewhat from firm to firm. One component of the approach commonly involves a statistical analysis of the likelihood of the tank having corrosion holes based upon the characteristics of the site soils and the age of the tank. The database for this analysis varies, but usually contains large numbers of tank failures from Canada and the United States.

This approach appears to have merit, but it is not included explicitly in the final rule because its effectiveness was not fully demonstrated. The Agency was unable to evaluate its effectiveness for two reasons. First, EPA does not have long-term performance data for a large number of tanks that have been assessed in this way prior to upgrading. Second, these practices vary from firm to firm and are not established in an industry consensus code. Such options for assessment may be used, however, where they have been determined by the implementing agency to prevent releases in a manner that is no less protective of human health and the environment than internal inspection or tightness testing.

EPA proposed that the cathodic protection system for upgraded tanks be designed by an independent corrosion expert. Commenters opposed to the requirement that the corrosion expert be independent were concerned that this was precluding the use of in-house personnel. The issue of independence is discussed earlier in this preamble in relation to the design of field-installed cathodic protection systems for new tank systems (section IV.B.1.). EPA agrees with these commenters that companies should be able to use their own qualified or trained employees. Accordingly, EPA has dropped the requirement that the corrosion expert be "independent."

Commenters also suggested that, because the proposed rule required that a corrosion expert design the retrofit cathodic protection system, the final rule should not dictate a particular cathodic protection system design. EPA agrees with these commenters and has decided not to require a specific retrofit cathodic protection method in the final rule provided that a corrosion expert determines the appropriate method based on the conditions at the site.

(3) Cathodic Protection and Internal Lining. A third option is to both line and cathodically protect the tank. The lining is intended to provide protection from internal corrosion; the cathodic protection prevents exterior corrosion. Because internal corrosion rarely occurs above the bottom third of the tank, a full lining may not be required if an internal inspection shows a sound tank exterior. The cathodic protection system must meet the same requirements as the new tank cathodic protection system except for dielectric coatings. The lining must be installed in accordance with the requirements of § 280.33.

c. *Upgrading Piping (§ 280.21(c)).* Upgrading of an UST system requires upgrading the system's piping as well. Metal piping must be upgraded in accordance with the requirements for new piping, except that a dielectric coating is not required if the existing piping is not upgraded by replacement. Pipe lining is a developing technology that may eventually become a viable option for upgrading some types of steel pipes; however, the technology requires more development and testing to prove its effectiveness for use on small-diameter pipes and thus is not an option for upgrading in the final rule.

d. *Tank Upgrading Methods for Spill and Overfill Control (§ 280.21(d)).* To prevent spills and overfills associated with product transfer to the UST system, all existing UST systems must comply with the requirements for new UST system spill and overfill prevention equipment, as specified in § 280.20(c). These additional requirements are discussed below in section IV.C.1.

4. Notification (§ 280.22)

Section 280.22 of the proposed rule included notification requirements for new and existing UST systems. These requirements are substantially the same in today's final rule. Sections 280.22 (a), (b), and (g) have been deleted because their effective dates have passed. Section VII of the notification form (certification of compliance) has been revised to reflect changed language in the installation, release detection, and corrosion protection requirements. The five tank columns on this section of the notification form have been deleted to simplify the form. EPA believes that the same installation assurance, release detection, corrosion protection and financial responsibility measures will usually be used at all of the new tank systems at any one location. Any sites where different measures are used for each tank can be certified with copies of this form.

C. General Operating Requirements

1. Spill and Overfill Prevention and Control (§§ 280.20 and 280.30)

a. *Introduction.* The surface spills and overfills that occur at UST systems are usually the result of human error, not equipment failure. There are two major types of surface releases: (1) Spilling, which results from improper dispensing practices such as disconnecting the delivery hose from the tank's fill pipe before the hose has drained completely, and (2) overfilling, which occurs when the tank liquid level exceeds tank capacity and product escapes through tank bung holes, vent lines, or fill ports. Spills and overfills occur on a relatively frequent basis; however, they are usually not reported because they are typically small in volume—less than 25 gallons—and can be easily contained and cleaned up.

Basically, the proposal required owners and operators to follow procedures and provide equipment to prevent these releases or to immediately contain and clean them up. In the proposed rule, proper transfer procedures had to be followed during all deliveries. For new UST systems, the Agency proposed the installation of alarms in conjunction with liquid level sensors, automatic shutoff devices that halt further delivery of product into the UST at a predetermined level, or the installation of catchment basins to contain overfills or spills (e.g., product left in delivery hoses at the time of disconnect). EPA also proposed requiring the immediate installation of spill and overfill equipment on any UST system that used external leak detection devices. Existing UST systems not using external leak detection devices were allowed up to 10 years to come into compliance with the proposed requirements for spill and overfill equipment.

In the Agency's study of the causes of releases from UST systems completed since proposal, many people contacted and interviewed in the field ranked spills and overfills as the most frequent cause of release rather than the distant third identified in the preamble to the proposal (52 FR 12667). For example, spills and overfills are reported in Dade County, Florida, to be the leading cause of release from UST systems. Experienced installation contractors reported that they repeatedly and frequently observe various indicators of spill and overfill problems, such as discolored soil above and around the tank and the dissolving of the tank's bituminous coating below the drop tube connection to the tank fill opening. Field

observations also implicated nonoperational components such as bung hole plugs and vent lines as a frequent cause of release in overfills. In addition, most experienced hands in the field felt that spills and overfills were two separate problems that must be addressed separately.

Based upon public comments and new findings on causes of product release, the Agency has made several changes in today's final rule for spills and overfills: The rule has been reorganized to address apparent confusion voiced by commenters concerning the presentation of requirements for new and existing USTs; an exemption from equipment requirements is provided for UST systems filled with small volume delivery of no more than 25 gallons; and the physical presence of an attendant is not required during the filling of the UST system as long as the transfer operation is otherwise monitored by mechanical or electronic means. Although EPA recognizes that the owner and operator may, through private agreement, ensure that ultimate responsibility for the exercise of proper delivery techniques is borne by the transport carrier, the final rule still holds the owner and operator responsible for preventing damages to human health and the environment due to spills because the Agency does not have jurisdiction over transport carriers.

The specific spill and overfill equipment requirements of the final rule are discussed below. These requirements apply to all new UST systems as of the effective date of this rulemaking, and existing UST systems must meet the requirements within 10 years of that effective date (see section IV.C.1.e. below). In addition, general operating procedures for spill and overfill control are applicable to both new and existing UST systems as of the effective date of the rule (see section IV.C.1.f. below).

b. *Spill Prevention (§ 280.20(c)(1)(i)).* The Agency has concluded that repeated spills can frequently cause significant environmental damage. Although most surface spills are small in volume, because they are often repeated they can eventually contaminate soil and ground water. Thus, the final rule requires use of spill prevention equipment (such as a small catchment basin around the fill port) at all new and existing UST systems. Catchment basins are the most prevalent form of spill prevention used today.

The proposed rule specified that when catchment basins were used they would be large enough to contain the volume of the hose. In response, several commenters objected to EPA relying on this larger sized catchment basin technology because of concerns about the potential fire or explosion hazard resulting from the buildup of petroleum fumes in the catchment basin area, the cracking of catchment basins due to freezing of accumulated water, or the potential that these containment devices would provide the deliverer with a false sense of security that would prompt carelessness during delivery. However, no commenters provided any data to EPA that indicated the occurrence of any fires or explosions due to vaporization of product in a basin, regardless of its size. In any event, EPA believes that compliance with the proper transfer procedures required in § 280.30(a) will prevent fuel from frequently collecting in the basins, and normal maintenance suggested by the equipment manufacturer will prevent water from accumulating and freezing. Several commenters said that small spill catchment basins are preferred in many circumstances. They also said that if overfill prevention equipment is also used, the problem of emptying a full transfer hose should rarely be encountered. Overfill prevention devices currently available in the United States either allow the transfer hose to drain at a very slow rate into the tank or can be manually overridden to empty the hose contents into the tank. As a consequence, today's final rule deletes the proposed size specification for spill catchment basins, thus leaving the determination of the appropriate volume to the discretion of the owner and operator. The design or size of the catchment basin (combined with the type of overfill prevention equipment also being required today) should be of sufficient size to contain spills and prevent releases to the environment. For example, if the catchment basin has a means for releasing its contents into the tank or another containment structure in order to provide more room in the catchment basin, a smaller volume catchment basin (e.g., the standard 5-gallon size) should be adequate equipment for preventing spills. Catchment basins without any means for drainage and requiring manual unloading may need to be of larger volume.

For those concerned that the use of catchment basins of any size or type may present a safety hazard, EPA allows use of alternative devices to prevent spills if they are approved by the implementing agency as preventing spills in a manner that is no less stringent in protecting human health and the environment. For example, a device that would prevent release from the transfer hose when detached from the fill pipe, such as a dry disconnect coupling, could satisfy this requirement. This provision is intended to provide flexibility in a rapidly developing technological area that will allow continued development of new and improved spill prevention equipment.

c. *Overfill Prevention (§ 280.20(c)(1)(ii)).* Agency data show that overfill prevention is also very important, not just for the prevention of large overfills released from the top of vent or fill lines, but also overfills that slowly leak out from the fittings at the top of the overfilled tank, such as the bung connections. In today's final rule, therefore, all new UST systems are also required to use overfill prevention equipment.

All new UST systems must be equipped with overfill protection by installing one or more of the following:

- A device that will alert the transfer operator when the tank is no more than 90 percent full by restricting the flow into the tank or triggering a high-level alarm;
- A device that will automatically shut off flow into the tank when the tank is no more than 95 percent full; or
- An equivalent device approved by the implementing agency.

These alternatives are essentially the same as those presented in the proposed rule except for the clarification that flow restrictors (i.e., ball float valves) are also allowed. Although not specifically mentioned in the proposed rule, several commenters felt that flow restrictors were adequate for spill and overfill prevention and are the most widely used method at present. Flow restrictors do not shut off inflow completely but instead significantly reduce the rate at which product enters the tank. The transporter can tell when the flow is reduced and stop delivery. Some commenters emphasized that many USTs are already using flow restrictors successfully. Upon review of these devices, the Agency has concluded that the flow restrictors are protective of human health and the environment, particularly if they are coupled with the requirement of § 280.30 that all transfers be closely monitored. The final rule allows the use of flow restrictors for overfill prevention.

EPA is concerned, however, that this type of overfill prevention may jeopardize the integrity of the tank if a pressurized product delivery system is used. Pressurized transfer of up to 30 psi is sometimes used with heavier fuels. Most tanks can safely withstand pressures of only 5 psi, and flow restrictors may allow a much higher pressure to develop during pressurized delivery, causing tanks to rupture. The

Agency has no information to indicate that such failures are common. Almost all of the UST systems addressed in today's rule are not filled by pressurized delivery. The delivery hose connection for this type of delivery usually includes a back-pressure sensor that automatically disconnects the hose if pressure develops in the tank.

EPA has decided that if an owner and operator uses either a high-level alarm or a flow restrictor, the devices must be activated at 90 percent of tank capacity. In the proposal, the high-level alarms were required to be activated at 95 percent of tank capacity. EPA has decided on the stricter standard for both of these devices because neither device is a total shutoff device. Also, both devices are subject to the operator's response to terminate the transfer.

Automatic shutoff devices do not require operator action to prevent overfills. Automatic shutoff devices prevent overfilling by automatically shutting off flow at the fill pipe before the tank fills up to the top. Already in widespread use in Europe, this approach is designed to completely eliminate overfills due to human error. The Agency believes this is the simplest type of overfill device for new and existing UST systems installing overfill prevention equipment. Inexpensive shutoff devices that are easy to install have recently become available to the U.S. market, with the potential for additional innovative technology to enter the market soon. Those who wish to use an overfill prevention device other than those mentioned in the rule may satisfy the overfill prevention requirement with use of alternative devices approved by the implementing agency as being no less stringent in protecting human health and the environment.

d. *Exemptions (§ 280.20(c)(2)).* Several commenters pointed out that infrequently filled UST systems pose less risk of releases from spilling and overfilling than systems filled on a more regular basis and, therefore, should be exempt from spill and overfill prevention equipment requirements. Other commenters suggested that UST systems filled manually in small increments, such as most used oil tanks, pose significantly less risk than those receiving large-volume deliveries.

The Agency is continuing to require spill and overfill prevention equipment on infrequently filled tanks in the final rule. Though a tank may be filled only occasionally, it is the potential size of overfills that concerns EPA. Although infrequent filling reduces the likelihood of a spill or an overfill release somewhat, it does not guarantee that a spill or an overfill that does occur would be of small quantity. In addition, EPA feels that in the future, as today's requirements are implemented, carriers of product may become accustomed to (and dependent on) devices such as high-level alarms or shutoff devices and would, therefore, be less attentive during product delivery due to reliance on prevention equipment to indicate completion of the delivery. Finally, the implementing agency would often be unable to determine the actual filling frequency for purposes of determining whether a particular UST system should be exempt from spill and overfill requirements, creating compliance monitoring difficulties. Consequently, the Agency has retained the required use of spill and overfill prevention equipment for infrequently filled tanks.

The final rule does not, however, require new UST systems filled through transfers of no more than 25 gallons to use spill or overfill prevention equipment (§ 280.20). The 25-gallon limit was selected because the Agency understands it is a common industry practice at automotive service centers to use containers up to this volume for handling used oil prior to putting it into the UST. EPA has concluded that the likelihood of overfilling the tank is small because the volume of the transfer is much smaller than the volume of the tank. In addition, the maximum size of the spill or overfill that could occur from a 25 gallon transfer is 25 gallons. This quantity is easier to contain and clean up than the maximum size spill or overfill that could occur from a transfer of several thousand gallons. EPA has concluded that proper operating practices and procedures (required under § 280.30), such as checking the available tank volume before each transfer, will adequately protect human health and the environment.

e. *Compliance Schedule for Initial Spill and Overfill Equipment (§§ 280.20 and 280.21).* In the proposal, the schedule for compliance required use of spill and overfill prevention equipment at the time of installation of all new UST systems. All existing UST systems must be upgraded within 10 years of the effective date of the final regulations. EPA has retained this 10-year requirement as an adequate period of time to retrofit existing UST systems.

EPA has deleted the proposed requirement to partially phase in the use of spill and overfill equipment whenever any external method of detection is installed at an existing tank. Some commenters expressed confusion about when such equipment would have to be retrofitted to tanks that already have installed external monitoring methods. EPA agrees that mandating this phase-in approach does present such implementation problems and unnecessarily hinders owner and operator flexibility in selecting their own schedule for compliance within the 10-year deadline. This proposed approach could unduly discourage the use of external methods of detection. Furthermore, research completed by EPA after proposal (and made available for public comment on March 31, 1988) has convinced the Agency that spills and overfills do not pose insurmountable problems to the use of external methods of detection that require the immediate retrofit of spill and overfill equipment.

As suggested by commenters, EPA considered requiring retrofitting spill and overfill prevention devices earlier, for example, at the time of installation of all release detection equipment or during a scheduled general system upgrade. The Agency decided against such earlier deadlines primarily due to the implementation difficulties this would pose. EPA believes that the limited population of installers precludes the rapid installation of spill and overfill controls at all of the UST sites nationwide. Although EPA has decided to retain the 10-year time period, the Agency expects that many tank owners and operators will retrofit these devices in less than 10 years even though it is not mandatory to do so. In many cases, retrofit of spill and overfill equipment at the time of release detection retrofit or of corrosion protection upgrading will be more cost effective. Finally, the less stringent release detection requirements that are allowed in today's final rules for fully upgraded tanks will actually provide an incentive to initiate earlier retrofitting to meet spill and overfill prevention requirements. The discussion of release detection requirements for upgraded tanks is provided in section V.D. of today's preamble.

f. *General Operating Procedures for Spill and Overfill Control (§ 280.30).* In addition to installation of release prevention equipment, the Agency has retained in the final rule the general operating procedures for both new and existing UST systems that were proposed to prevent spills and overfills.

Proposed § 280.30(a) stated that the owner and operator must ensure that releases do not occur and must be physically present to observe the transfer of product. Many commenters suggested that the driver of the delivery vehicle should be held responsible for any releases during delivery, and that having someone physically present who

represents the owner and operator during all deliveries is impractical and costly. Although EPA agrees that responsible carriers are the primary agents in the field to prevent spills and overfills, for the purpose of complying with today's requirements, the UST system owner and operator is responsible for preventing spills and overfills. The Agency must take this approach because it has no legal authority to regulate transporters under Subtitle I. Thus, regardless of whether the owner and operator decides to share (by contract) responsibility for the monitoring of the transfer with the carrier, under today's final regulations the owner and operator will continue to be responsible in the event that there is a release during delivery. See section IV.E.2.d. of the preamble and § 280.53 of the final rule for the requirements of owners and operators in the event of a spill or overfill.

The proposed rule required that a person be physically present at all times during the transfer of product to be able to respond quickly to a spill or overfill (proposed § 280.30). Some commenters suggested, however, that many UST systems are in large tank farms where it would not be feasible or economical (especially during multiple filling operations) to have someone present at each tank during the time it was being filled. In response to these suggestions, EPA is changing this requirement in the final rule to simply require that all deliveries be monitored constantly. This change allows for a person at the site (but not necessarily at the transfer point) to monitor a transfer using remote sensing equipment that can prevent a spill or an overfill from occurring. This change will continue to meet the intent of the proposed requirement, that delivery be monitored, and will also accommodate operations encountered at large tank farms where it is difficult for a person to be at every tank. Many of these installations have central monitoring stations where all the tanks can be supervised through remote control monitoring and shutoff equipment.

2. Operation and Maintenance of Corrosion Protection (§ 280.31)

As discussed in the preamble to the April 17 proposal (52 FR 12666–12667), corrosion was found to be one of the common causes of release in existing underground tank and piping systems that are unprotected from corrosion. The consensus of experts in the field contacted by EPA indicates that the installation and proper operation and maintenance of corrosion protection systems can significantly reduce the incidence or volume of release due to corrosion. Officials in Ontario, Canada, Denmark, and Sweden have cited the success of such corrosion protection programs initiated in their respective countries during the early to mid-1970s. The proposed rule addressed operation and maintenance of corrosion protection systems in § 280.31 (see preamble discussion in 52 FR 12707).

a. *Extent of Corrosion Protection (§ 280.31(a)).* EPA proposed in § 280.31(a) that all corrosion protection systems must be operated and maintained to continuously provide corrosion protection to buried metal components of the UST system. Public comments on proposed § 280.31 supported the necessity of routine maintenance of the corrosion protection systems by qualified field personnel.

The Agency also invited comments on which components, if any, should be cathodically protected; whether there are noncorrodible metal alternatives for that component; and what form of corrosion protection is appropriate if cathodic protection is not required (52 FR 12707). Many comments were received in this area. In summary, some commenters suggested that all corrosion-protected metal components of UST systems, including swing joints, flexible connectors, and riser connections, should be monitored regularly. Other commenters suggested that some components, such as bung plugs and the pump housing, do not need cathodic protection and maintenance. (As discussed in more detail earlier in this preamble in the section on new piping design and construction requirements (section IV.B.1.b.(2).) In the final rule, EPA requires protection of delivery piping and that portion of the tank routinely storing regulated substances. Requirements for spill and overfill equipment and practices will prevent releases from the top of the tank and vent piping.

EPA agrees with commenters who found it unnecessary to require protection for portions of the system that would not regularly contain product or are not in contact with the soil, even if situated underground. Bung plugs are inserted into unused openings at the top of a tank and are not subject to releases except in the event of overfills. Delivery piping is defined as that portion of the UST system piping through which product is introduced into the tank or delivered from the tank. Cathodic protection is not required for the fill pipes of tanks that have a drop tube because the drop tube is the part of the tank that routinely contains product. The drop tube is not in contact with the soil and thus does not require cathodic protection. Vent piping is not used for delivery of product and presents a minimum risk for release to the environment. In fact, vent piping would be a potential release source only in the event of overfill conditions. The release potential from bung plugs and vent piping will be eliminated or substantially reduced by the requirements for overfill prevention equipment required in § 280.30 of today's rule and, therefore, the Agency has not required their cathodic protection in today's rule.

Pump housings, when contained in the equipment manway at the top of a tank, do not come in contact with the soil and thus do not require cathodic protection. Other pump housings are often isolated from the soil by being submersed in the product in the tank or situated in the dispenser housing above grade and, therefore, do not require cathodic protection. Only those pump housings that are in contact with the ground and potentially contain product require cathodic protection.

b. *Qualifications for Corrosion Personnel (§ 280.31(b)).* EPA proposed in § 280.31(b) that all cathodic protection systems be inspected and designed by an "independent" corrosion expert. Most of the comments received by EPA in this area strongly opposed the requirement of an "independent" corrosion expert. EPA agrees that the proposed requirement for the independence of the expert is not needed and has deleted this term from the final rule. (See section IV.B.1.a.(2) above for a discussion of this issue.)

Other commenters pointed out that the maintenance, operation, and inspection of an installed cathodic protection system could be performed by people who have much less training than a corrosion expert. EPA agrees with these comments, recognizing that most of these inspections are now being conducted by trained specialists. Thus, EPA has replaced the term "independent corrosion expert" with "qualified cathodic protection tester" in the final rule. Cathodic protection testers must be able to demonstrate education and experience in the measurement of cathodic protection of buried or submerged metal piping systems and metal tanks. A definition to this effect has been added to the final rule. The National Association of Corrosion Engineers (NACE) has developed an examination that can be used to ensure that cathodic protection testers are qualified.

c. *Inspection Schedule (§§ 280.31 (b) and (c)).* EPA proposed a minimum

inspection schedule for cathodic protection systems in § 280.31(b). For field-installed cathodic protection systems, the proposal required that the system be tested within 6 months of installation and at least annually thereafter. For factory-installed cathodic protection systems, it was proposed that each system should be tested within 6 months of installation and at least every 5 years thereafter. For all impressed current systems, the proposed requirement was inspection and/or testing as appropriate, and at least annually. The Agency invited comments on the advantages and disadvantages of allowing less frequent inspections/testings for those tanks that are equipped with premanufactured corrosion protection (52 FR 12707).

Several comments were received in these areas. Some commenters felt that the proposed testing requirements for field installation were excessive and that there is no technical reason to differentiate between field- and factory-installed systems. After consultation with groups of industry experts during the public comment period, EPA now agrees with the commenters who recommended that all cathodic protection systems should be tested at the same frequency and the Agency is now requiring in the final rule that all cathodic protection systems be tested within 6 months of installation and at least every 3 years thereafter. These intervals are sufficient to detect any damage or failure of the system and to take remedial action in time to prevent structural failures due to corrosion. EPA understands that this time interval is consistent with sound practice as is now recommended in the recently revised NACE code and by major tank manufacturers.

EPA proposed in § 280.31(c) that all UST systems with impressed current cathodic protection systems must be inspected every 60 days to ensure that the equipment is running properly. This equipment inspection is required in addition to the testing of the cathodic protection. EPA has received many comments on this section. Several commenters supported the proposed approach, with some further suggesting that impressed current systems must be inspected six times a year with intervals not exceeding 75 days. Some commenters suggested monthly inspection of all systems while others suggested immediate testing after installation for all impressed current systems and annually thereafter. No commenters stated that periodic testing of an impressed current system should not be required.

EPA agrees with the commenters who said that inspection at 60-day intervals is protective of human health and the environment because loss of power to the anodes for 60 days is very unlikely to result in corrosion failure. Thus, the proposed inspection approach has been retained in the final rule. This inspection is conducted to simply ensure that the equipment is running properly and is relatively straightforward for most impressed current systems. Most of these systems include a light on the control panel that indicates proper operation. No special training is required to perform this inspection.

d. *Recordkeeping (§ 280.31(d)).* EPA proposed in § 280.31(d) that records documenting the proper operation of corrosion protection systems must be maintained. EPA requested comments on this proposed requirement, and none were received. The Agency has made slight changes in the wording of this requirement to make the intent of the final requirement clear. This minor change does not change the substance of the proposed requirement. The records that are maintained must provide the results of testing from the last two service checks required in § 280.31(b) (which must be performed by a corrosion protection tester) and the last three inspections required under § 280.31(c) (which can be performed by the owner and operator). EPA believes that this record will provide sufficient information to demonstrate that the proper operation and maintenance of the cathodic protection system is being carried out.

e. *General Performance Standards for Testing.* Section 280.31(e) also proposed three criteria to be used while testing cathodic protection systems. EPA received several comments regarding this approach, with most of them suggesting that EPA should include all of the five criteria as defined in NACE RP-02-85. Based on the suggestions of these commenters, EPA now believes that industry codes, such as NACE RP-02-85 and API's "Guide for Inspection of Refinery Equipment," developed by nationally recognized associations provide clearer and more complete guidance about the use of these criteria to determine the adequacy of cathodic protection. These criteria are also better explained in technical documents such as these industry codes. In addition, these criteria are subject to continued review and can be revised to reflect new measurement techniques that result from increased understanding of corrosion phenomena.

Accordingly, § 280.31(e) has been deleted, and there is no explicit listing of the three criteria from the proposed rule. The proposed criteria have been replaced with a more general performance standard (in § 280.31(b)) that requires the service checks be performed in accordance with a nationally accepted code of practice. This approach accommodates the concerns of the commenters who recommended that all five of the NACE criteria should be allowed to be considered. At the same time, this approach encourages the application of the proper standard because these national codes are presented within the context of significant technical guidance as to the proper use of each criteria. Thus, in the final rule, owners and operators are being held to the use of at least these criteria as recommended in these national codes.

f. *Notification Requirement.* EPA proposed in § 280.31(f) that owners and operators of new UST systems must certify compliance with the corrosion protection requirements on the notification form submitted pursuant to § 280.22. No comments were received by EPA on this requirement. In the final rule, this section has been moved for clarity to § 280.22(e), which identifies notification requirements.

3. Inspection and Maintenance of the Tank System (§ 280.31)

In the preamble to the proposed regulation, the Agency discussed three alternatives for the required maintenance and inspection of the tank system (52 FR 12707). EPA proposed requirements for the maintenance and inspection of corrosion protection systems and requested comments and information on the need for broader requirements. Two alternatives were described that addressed the maintenance and inspection of the entire site or other tank system equipment in addition to the corrosion protection system.

a. *Site or System Inspections.* Many comments were received by EPA on these alternative inspection requirements. Some commenters felt that inspection of the entire site or of the tank system is of little practical benefit and unnecessary because such an inspection alternative would be duplicative of the leak detection requirements. One commenter suggested conducting inspections of the entire UST site.

EPA agrees with commenters who stated that site inspection is duplicative of leak detection. Institution of release detection systems should provide effective warning of releases from most of the components of the tank system,

thereby eliminating the need to require the general inspections. Also, the majority of USTs are completely underground and inaccessible to inspection, rendering total system inspection impractical.

b. *Inspections for Tank Deflection.* Small distortions of the tank diameter are expected at the installation of USTs, and the tanks are designed with an allowance to withstand them. Improper backfill or failure to install foundation anchors (or failure of the anchoring system) can lead, however, to excessive distortion resulting in rupture of the tank. One way to verify this distortion is by measuring tank deflection (variation from true diameter). EPA had requested comments on periodic tank deflection measurements for steel or FRP tanks as a means of preventing tank failures. Many comments were received by EPA on this inspection method. Some requested EPA to mandate periodic deflection monitoring for FRP tanks in the final rule. Others stated the view that FRP tanks do not require periodic deflection monitoring because virtually all deflection ceases after the first year. Some also recommended vertical diameter measurements for all new tanks to verify initial installation results.

The Agency disagrees with commenters who suggested periodic tank deflection monitoring for FRP tanks. The low incidence of failure in FRP tanks (less than 0.5 percent), which has been declining substantially over the last 10 years, argues against the need for periodic deflection measurements. The Agency has, therefore, chosen not to mandate periodic deflection measurement in the final rule. The Agency believes that excessive deflection in FRP tanks is usually due to improper installation and occurs soon after the installation is complete. Deflection measurements during and immediately following installation are required by the tank manufacturers for purposes of warranty validation. EPA believes that these are sufficient for the protection of human health and the environment.

In addition, investigators conducting a study of deflection monitoring of FRP tanks in Suffolk County (New York) have reported to EPA that the deflection measurement is often difficult to obtain unless special provisions are made for taking this measurement when the tank is installed. Special tools and training are required to prevent damage to the fill pipe tank seal (53 FR 10403) when obtaining access to the tank for conducting the test.

c. *Monitoring Corrosion Protection at Composite Tanks.* The Agency had also requested comments on requiring corrosion protection inspections for composite tanks. Some commenters stated that composite tanks should be monitored to ensure the integrity of the FRP coating, using the same criteria used for the cathodic protection inspections. Others felt that inspections of composite tanks are unnecessary after installation. The Agency disagrees with the commenters who recommended that composite tanks be periodically monitored to ensure the integrity of the FRP coating. It has been reported to EPA that most composite tanks pass when tested through the measurement of electrical continuity between some structure of the tank and the soil; however, the tanks that have "failed" this test showed no evidence of external corrosion once they were excavated and inspected. This is a point of continuing controversy within the National Association of Corrosion Engineers. Based on the superior performance of composite tanks to date (no documented failures due to external corrosion), EPA has decided not to mandate the corrosion protection monitoring of composite tanks in the final rule.

4. Compatibility (§ 280.32)

In the proposed rule, EPA set forth a general performance standard requiring owners and operators to use an UST system made of or lined with materials compatible with its stored substances. Incompatibility could result in the structural deterioration of the containment vessel or piping and cause releases into the environment (see 52 FR 12708–12710). Because EPA has found no significant evidence that incompatibility is a cause of release from USTs, the final rule contains no additional requirements and thus remains the same as proposed.

a. *Compatibility of FRP Tanks with Alcohol-Blended Fuels.* Since the proposal appeared, EPA sought additional information on problems reportedly caused by incompatibility of FRP tanks and alcohol-blended fuels. This search included conversations with several groups very familiar with these fuels and the FRP tank industry. In all of the information reviewed, only one release case was suspected to be caused by incompatibility problems. In addition, EPA has been unable to find any demonstrated incompatibility problem with 10-percent alcohol-blended fuels and FRP tank systems.

There are two types of FRP tanks. The standard FRP tank is compatible with up to 10-percent alcohol-blended fuels. The second type of FRP tank is manufactured with a special resin that ensures compatibility with blended fuels containing greater than 10-percent alcohol. Although the higher percentage alcohol-blended fuels (11 to 100 percent) might, over long periods of time (at least theoretically), pose compatibility problems in standard FRP tanks, the actual threat posed is believed to be very small for two reasons. First, the current and projected use of oxygenated fuels shows a trend that will increase the use of 10-percent alcohol-blended fuels but that will not increase the percentage of alcohol in the fuels. Second, information provided to the Agency indicates that numerous facets of industry (tank manufacturers, tank owners, and distributors) are very aware of and concerned with alcohol-blended fuels and FRP tank and piping compatibility problems. Industry practice is for the tank owner or operator to contact the manufacturer when a different product is to be stored, thus allowing the manufacturer to check its records concerning the compatibility of the stored substance and existing tank system. Numerous tanks have been relined with different resins that are compatible with the new fuels. EPA has added a note to the performance standard which refers to industry codes that can be used as guidance to help owners and operators with alcohol-blended fuels satisfy the compatibility requirement.

5. Repairs (§ 280.33)

In § 280.33 of the proposed rule, EPA proposed conditions under which repairs to an UST would be allowed. As discussed in the preamble to the proposal (52 FR 12710–12711), numerous state UST programs already address this topic in their regulations. Eight state programs refer to industry guidelines that should be followed in making repairs. Since proposal, EPA has continued to investigate the subject of UST system repairs. Numerous commenters on the proposal addressed this subject. It is obvious from the response received and other work undertaken by the Agency that there is a great deal of interest and ongoing activity in the field of UST management concerned with UST system repairs (including the development of new codes and practices). As discussed below, today's final rule incorporates several changes to the proposed requirements concerning UST repairs, including the deletion of, revision of, and addition to several of the conditions in the proposal.

a. *Repair and Lining (§ 280.33(a)).* Under § 280.33(a), EPA proposed to allow the repair and lining of a tank if four requirements were met: (1) A vacuum test was conducted, (2) the

lining material was compatible with the regulated substance stored, (3) the tank was inspected internally and ultrasonically tested, and (4) the tank had not been repaired or relined previously. Today's final rule revises some of these proposed requirements as discussed below.

In § 280.33(a)(1), EPA proposed requiring that a vacuum test be conducted on repaired tanks. This requirement was intended to ensure sound repairs (52 FR 12711). The vacuum test is no longer required for reasons that are discussed in more detail in subsection d. below.

In § 280.33(a)(2), EPA proposed requiring that the lining material applied to the interior of the tank be compatible with the regulated substance stored. All commenters agreed that this provision was necessary and pointed out that it is one that is already being followed in current industry practice. The specific requirement has, therefore, been deleted but the lining material is still required in the final rule to be compatible with the regulated substance stored in the tank because this concern is incorporated into all current codes and practices and one of these must be followed under the final rule.

In § 280.33(a)(3), EPA proposed internal inspection and ultrasonic testing of a tank to determine that it was structurally sound. Under today's final rule, the tank must still be internally inspected and determined to be structurally sound, but the ultrasonic test is no longer required. EPA received comments concerning the methods to test a tank to ensure that it is still structurally sound. These comments indicated that alternative tests were available to determine the structural integrity of the tank. National codes, including API 1631 and NLPA 631, provide alternative methods. Currently available data submitted and developed independently by EPA concerning field performance of tank lining indicate that if these codes are followed, the lined tanks will perform very well (see the discussion of interior lining under the upgrading section presented earlier in this preamble). EPA has learned that Underwriters Laboratories is currently developing a performance test (Subject 1856); however, it is still in the draft stage at this time. Consequently, today's final rule reflects the conclusion that it is not necessary to require a specific test to ensure structural soundness. Thus, EPA has substituted a performance requirement in § 280.33(d)(1) of the final rule that the internal inspection be conducted in accordance with codes of practice developed by a nationally recognized association or independent testing laboratory.

For purposes of assisting implementation of this general requirement, the final rule includes the note that the lining and repair procedures described in API 1631 and NLPA 631 may be used to comply with § 280.33(a). These codes describe test protocols for inspecting tanks to determine the structural soundness. The use of the ball peen hammer test is described, as well as the use of ultrasound. The codes include criteria for minimum allowable remaining thickness and maximum number of perforations per unit area in determining the condition of the tank. The codes also specify tests to ensure that the repair or lining has been performed correctly. EPA intends by this approach to allow other applicable national codes (such as UL 1856) developed in the future to be used in meeting this requirement.

In § 280.33(a)(4), EPA proposed limiting UST repair to only tanks that had not been previously repaired. In other words, a tank could be repaired only once so as to avoid continued repair of an UST that was fundamentally unsound (52 FR 12711). Some of the commenters suggested that, under this approach, EPA needed to resolve definitional questions concerning what constitutes a repair versus simple preventive maintenance. They expressed concern that the proposed one-time repair provision might preclude the use of preventive maintenance that would otherwise prevent leaks. Other commenters opposed this requirement, stating that structurally sound tanks could be repaired repeatedly; they also provided extensive data showing that repaired tanks had an excellent performance record. Other commenters opposed allowing any repairs to tanks that had leaked.

After study of the comments, review of the submitted performance data on repaired tanks, and further study of the codes, EPA agrees that restricting repair to a single time is unnecessary. The submitted record of repaired tanks was found to be very good and numerous EPA contacts with tank lining users and regulators have generally confirmed the accuracy of this performance record. Therefore, EPA has concluded that the tank repair codes already in existence (and in use for years) provide adequate standards and guidelines for determining if a particular tank qualifies for repair. Consequently, EPA has not included the one-time only repair requirement in the final rule and will allow tanks to be repaired more than once provided that they meet the standards for repairability in the applicable codes and that the repair is completed in compliance with these standards. If a tank has leaked product, however, the requirements for corrective action must be met and will sometimes require removal of the tank in order to complete the appropriate cleanup measures even if it is determined to be structurally sound and repairable.

b. *Cathodic Protection (§ 280.33(e)).* In § 280.33(b), EPA proposed that all steel tanks with corrosion holes that are subsequently repaired be retrofitted with a cathodic protection system that is designed by an independent corrosion expert and operated and maintained in accordance with § 280.31. Again, comments were received objecting to the requirement of the use of an "independent" corrosion expert on the grounds that many companies employ corrosion experts and that requiring an independent expert would be unnecessary and burdensome. As discussed earlier in this preamble in section IV.B.1.a., EPA is dropping the requirement for an "independent" corrosion expert in the final rule.

Comments were also received indicating that the addition of a cathodic protection system to a tank that was repaired by lining was not necessary and represented a significant additional expense. In view of the excellent performance record to date with relined tanks, EPA agrees with this point to some extent. Accordingly, in the final rule, EPA will allow lining alone as an upgrade alternative for corrosion protection provided that it is done within the confines of one of the national codes. In other words, a tank that is determined to be structurally sound under the criteria in the codes may be upgraded by lining alone for a 10-year period. The interior of the tank must be reinspected at the end of the 10-year period following the lining. If this inspection shows the tank is still sound, again in conformance with the existing codes, the upgrade can be extended for use for another 5 years. Thus, in the final rule, lining alone (without cathodic protection) provides an allowable upgrade for corrosion protection for a 10-year period. This period may be extended in 5-year increments by inspecting the tank according to the codes and demonstrating that the tank is still sound and that the lining can prevent releases for another 5 years.

c. *Authorized Repair for FRP Tanks (§ 280.33(b)).* In § 280.33(c), EPA proposed that repairs to FRP tanks be made only by the manufacturer's authorized representatives. Many

comments were received opposing this proposed requirement.

Commenters argued that qualified in-house personnel should be allowed to perform repairs and that such a restriction would limit the opportunity for private enterprise and small businesses to enter into the FRP repair industry. They also expressed concerns that restricting repairs to the manufacturer's authorized representatives would increase the cost to the owners and operators. Finally, they believed that such a restriction could result in insufficient repair capability and cause delays in repair, particularly in less populated and more remote regions.

Several comments were also received that supported the proposed requirements stating that long-term repair of FRP tanks requires the use of proper repair materials and techniques. Commenters in favor of this position argued that only the manufacturer has the requisite knowledge of the appropriate materials and methods to repair the specific composition of FRP used in its tanks. They pointed out that these manufacturers have already established authorized representatives trained in the proper methods and supplied with the quality-assured and correct materials. They also suggested that, because the manufacturer bears continuance of product liability, only the manufacturer's authorized representatives should be allowed to repair FRP tanks.

After carefully considering the arguments on both sides, EPA has decided to change the proposed requirement to allow not only the manufacturer's authorized representatives to repair FRP tanks but to also allow qualified in-house personnel to conduct repairs if a code of practice developed by a nationally recognized organization or independent testing laboratory is followed.

Information presented by commenters convinced the Agency that there are other qualified and competent individuals who could provide reliable and proper repair services for FRP UST systems. Though there are no currently established industry standard codes for repair of FRP tanks, at least one nationally recognized organization is presently developing such a code. Therefore, the Agency believes it would be imprudent to restrict repair services to only manufacturer's authorized representatives. The Agency also believes that allowing repairs to be conducted by other qualified in-house personnel in accordance with an industry code of practice will help ensure that there are adequate repair personnel available to provide competent repair services in a timely manner.

d. *Vacuum Test.* In § 280.33(d), EPA proposed requiring that a vacuum test (at 5.3 in. Hg) be performed on the tank following repair. Section 280.33(f) proposed the added requirement of having a tank tightness test performed within one year following the repair of a tank. Comments were received on the technical details of these tests and on whether they were really needed to determine that the repaired tank was sound and would not release product to the environment. Several commenters questioned the technical adequacy and appropriateness of the use of a vacuum test, objecting to this requirement as possibly damaging some types of tanks.

As a result of the technical information supplied by these commenters, EPA agrees that release detection (see § 280.43 (d)–(h) of the final rule), and quality control inspections performed according to established industry standards, should provide sufficient ensurance that the repair or lining of the tank was performed correctly, and thus, a vacuum test is not necessary. The current good performance of repaired tanks, most of which were not vacuum tested, points to the validity of these comments. In addition, EPA agrees that the test could be harmful in some cases. Consequently, the Agency has dropped the requirement of a vacuum test from the final rule.

EPA has also decided that the proposed requirement for a tank tightness test within one year following repair is not always necessary because it duplicates the industry practice of internally inspecting lined tanks and the release detection requirements that apply to the repaired tank. The good performance record of repaired tanks makes such an additional requirement unnecessary.

e. *Pipes and Fittings (§ 280.33(c)).* In § 280.33(c) of the proposal, EPA required replacement of pipes and fittings from which a release had occurred due to corrosion. The proposal did allow the tightening of loose fittings and joints for purposes of repairs. Comments were received indicating that FRP piping could be satisfactorily repaired and that some types of valves could also be repaired adequately without replacement. EPA believes that replacement of metal pipe sections and fittings that released product because of corrosion or other damage is still necessary but, in response to the issues raised by several commenters, will allow repairs of FRP piping in the final rule. The final rule does not prohibit repairs of metal valves provided that these can be done in a manner that provides sufficient protection against releases. To ensure that these allowable repairs are carried out according to sound practice, EPA requires that all of the repaired sections be tested and shown to be tight so that they will not have a release after they are put back into service.

f. *Recordkeeping (§ 280.33(f)).* In § 280.33(g) of the proposal, EPA required owners and operators of a repaired tank to maintain records, including signed certification, capable of demonstrating compliance with the requirements of this section.

Comments were received suggesting that a log should be required for each tank which would document installation, repairs and maintenance, products, tests, and results. EPA agrees that such a log would be a useful means for owners and operators to document their compliance with UST management requirements and would encourage it. EPA believes, however, that specifically requiring a log as opposed to other methods of recordkeeping is unnecessary.

The final rule retains the general requirement that owners and operators maintain records demonstrating compliance with this section for the operating life of the UST system.

6. Reporting and Recordkeeping (§ 280.34)

a. *Introduction.* In the preamble to the proposal (52 FR 12711), the Agency identified the importance of the retention by the UST system owner and operator of key records of operation on site, and reporting of significant events to the implementing agency. Because routine reporting would create an overwhelming burden for the implementing agency due to the size of the large regulated universe, records will often be the only way for implementing agencies to determine that certain important regulatory actions actually took place. Such recordkeeping also prompts the owner and operator to carry out regularly scheduled actions that are necessary to protect human health and the environment. Reporting of significant developments (such as leaks and large overfills) provides information to implementing agencies early enough for them to ensure effective action is taken by owners and operators to correct the problem. In general, the proposal consisted of simple but essential recordkeeping and reporting requirements: Recordkeeping that is sufficient to ensure each owner and operator can demonstrate the recent compliance status of the facility; and

reporting that allows for early involvement of the implementing agency should an UST system failure need to be corrected.

The proposal required owners and operators to report three significant events to the implementing agency: (1) New UST system installation; (2) final closure; and (3) a suspected release from an UST system and any subsequent actions needed to contain, correct, and clean up a release. An UST system owner and operator who experiences no problems in the operation of the UST system would only have minimal reporting requirements, imposed at the installation and closure of the facility. Only in the event of system failure and a confirmed release would the reporting requirements substantially increase, and the level of this increase would be directly related to the significance of the threat posed to the environment. Recordkeeping was proposed that would demonstrate the use of requisite prevention and monitoring equipment as well as the facility's recent compliance status, as displayed through recent release detection, maintenance, and testing results.

Public comments on the proposal generally supported the Agency's proposed approach to recordkeeping and reporting although some concerns were raised about the scattered placement of these requirements throughout the rule. Some commenters stated that this format made it difficult for them to find and made it confusing to determine all of the owner and operator's recordkeeping and reporting responsibilities. In response to this concern, the final rule includes in one section of the rule (§ 280.34) a reference or directory to all of the reporting and recordkeeping requirements found elsewhere in the rule.

Other commenters suggested that additional and, in some cases, more complete records be required in the final rule. As explained below, however, today's recordkeeping and reporting requirements have remained essentially the same as were proposed. A few minor recordkeeping requirements have been added, and a few additional pieces of information must be reported during corrective actions to assist the implementing agency's assessment of the release problem. These few changes to specific recordkeeping and reporting requirements are discussed elsewhere in today's preamble as part of the more detailed analysis of the final rule's technical requirements for closure; release detection; tank system repair, operation and maintenance; and corrective action.

b. *Summary of Final Approach.* EPA received widespread support for the general notion that at least some recordkeeping and reporting is essential to ensure owners and operators adhere to the technical standards being promulgated today. EPA did not receive any information or comments to persuade it that a significant departure from the proposed approach was necessary or appropriate. Thus, the final rule essentially retains the proposed approach.

As discussed in the preamble to the proposal (52 FR 12712), recordkeeping is necessary to ensure compliance with the technical standards for release detection, closure, operation and maintenance of corrosion protection systems, and UST system repair. The Agency, as well as many commenters, believes, however, that demonstration of compliance of all requirements over the total operating life of the facility is impractical and unnecessary to protect human health and the environment. Today's approach is predicated on the intent to impose the minimum burden on the regulated community while at the same time ensuring that all owners and operators will be able to demonstrate at the request of the implementing agency whether their UST system is being managed in a manner that will protect human health and the environment. For example, the time frames for record retention were established to enable a demonstration of recent facility compliance status prior to an on-site visit. EPA is convinced that today's final recordkeeping requirements are essential and serve both the implementing agency's and regulated community's mutual interest. Many owners and operators may decide to keep more detailed records than are required or retain records for longer than today's minimum time frames. State and local governments may want to require additional recordkeeping.

Today's final reporting and notification requirements are also intended to foster the self-implementation that underlies today's final technical standards. Under today's reporting requirements, an owner and operator do not have any reporting obligations over the entire service life of the facility beyond the initial notification at installation and the final notification of permanent closure unless a suspected release in the environment has occurred. Given the enormous size of this regulated community, the Agency has concluded that it is impractical and unnecessary to overburden implementing agencies with periodic or routine reports from UST facilities that are operated properly and have no adverse environmental impacts. The Agency expects that most UST systems will rapidly improve and move into this category during the coming 10-year upgrade period.

Reporting of releases and corrective actions taken is explicitly required under section 9003(c) of RCRA. Although EPA expects numerous releases will be identified within this large regulated community, the Agency has concluded that reporting them to the implementing agency is a necessary first step to ensure protection of human health and the environment. Today's final approach to the reporting of releases and corrective action is based on the simple assumption that the more serious a release and its impacts are, the greater the necessity for interaction with (and reporting to) the implementing agency. The implementing agency is expected to ensure that the public interest is represented during cleanup decisionmaking and actual corrective action activities. The greater the threat to human health and the environment, the more reporting and governmental oversight that is needed.

Public comment on recordkeeping was generally favorable. Some commenters, however, objected to the differentiation between on-site and off-site record maintenance and availability. Under the proposal, records kept off-site had to be available within 24 hours while on-site records had to be immediately available. Other commenters objected to the requirement for providing off-site records within 24 hours, noting that sometimes important records are retained at corporate headquarters far removed from the UST sites. EPA agrees that there should be no real distinction for availability of records and that the 24-hour allowance may seem inequitable to those who must maintain records that are immediately available on-site. However, the provision in the final rule remains unchanged. Records retained at the site must be available immediately because EPA has concluded that there is no reason that they should not be except that they are not present or up-to-date when requested. When records are maintained at a business office off-site, they must be located at a readily available site and provided upon request (§ 280.32(c)). This change to require off-site records to be provided "upon request" responds to those commenters who pointed out that the proposed 24-hour limit was often impossible to achieve when records are stored at off-site locations. This change is also made to provide some discretion to the on-site inspector who can talk to

the owner and operator and determine where the records are stored off-site and decide whether they should be made available for inspection. If the records are easily accessible, the inspector may request that they be made immediately available. This change also responds to the commenter who believed there should be the same time allowed for providing records stored either on- or off-site because off-site records must be provided within the time frame requested by the implementing agency.

EPA believes that, under most circumstances, copies of the originals should be maintained on-site. If copies are not maintained at the sites, the owner and operator will have to take on the added burden of providing the implementing agency with these copies in an expedited fashion when they are requested.

Also, the Agency has determined that it will not make site plans a required record because it is not necessary to ensure compliance with the technical requirements promulgated today. A site plan is, however, a useful tool for owners and operators. The Agency notes that site plans are recommended in recent updates of national codes addressed to the installation of new UST systems.

Finally, as noted above, in response to commenters' confusion over the various recordkeeping and reporting requirements in the proposal, the final rule has been revised to include a directory in § 280.34 that is intended to simply summarize and identify the recordkeeping and reporting requirements. This new section is intended to eliminate the confusion identified by several commenters when trying to locate their recordkeeping and reporting responsibilities in the proposal. Each item of reporting and recordkeeping is identified and listed, including a reference to the section of the final rule in which full details may be found. Requirements with respect to the general availability and maintenance of records are presented along with this directory section and have not changed since proposal, except for the slight extension of the allowable period for making off-site records available to the inspector (see discussion above).

D. Release Detection

This section of today's preamble provides a summary of the Agency's final approach to release detection, the proposed rule, and the major changes from the proposal. A section-by-section analysis of the final rule (IV.D.2.) discusses in detail the final release detection requirements, including highlights of major public comments received.

1. Overview

a. *General Approach to Release Detection.* As described earlier in this preamble, today's requirements that new and existing UST systems be properly installed, protected from corrosion, and equipped with spill and overfill protection will dramatically reduce UST system releases. Release detection is an essential backup measure to prevention, particularly for unprotected steel UST systems (prior to upgrading or replacement) and pressurized piping because they are more prone to releases. A variety of release detection methods have been successfully applied to USTs. These methods can be grouped into six general categories: tightness or precision tests, tank gauging systems, inventory control methods, ground-water monitoring, vapor monitoring, and interstitial monitoring. Each was discussed in the preamble to the proposal (52 FR 12714). State and local programs have chosen to rely on different combinations of these methods. They all appear to be successfully detecting releases when properly applied. To maintain flexibility in the selection of release detection methods, both for the implementing agencies and for the owners and operators, the proposal allowed the selection of release detection to be tailored to the characteristics of each site and, therefore, avoided unnecessary disruption of successful state and local programs. The most important features of the proposed and final rules are summarized in the sections below.

b. *Highlights of the Proposed Rule.* In the proposed rule, the release detection strategy relied on the use of either monthly detection methods or a combination of tightness testing (performed semiannually to every 5 years) and monthly inventory control. Frequent testing dramatically increases the probability of detecting a release and reduces the length of time a release can go undetected. A 30-day frequency was selected as a practical monitoring frequency that was sufficient to protect human health and the environment. The proposed rule required only one release detection method at each UST site, because frequent use of one monitoring method was sufficient to discover releases before they could cause significant damage to the environment.

Current industry practices generally do not include frequent release detection and most releases that are discovered are detected through impacts on the surrounding community or large inventory losses. Consequently, substantial time and effort will be required to reach the goal of monthly monitoring for all UST systems. The proposal phased in detection requirements over 5 years to allow the leak detection industry time to expand and to more evenly schedule the demand for detection equipment. The proposed rule also allowed less frequent use of tank testing (every 3 or 5 years when combined with monthly inventory controls) during the first 10 years of the program. The goal of the proposed approach was the installation of release detection as quickly as possible on the tanks most likely to leak.

To ensure flexibility, all proven methods of release detection were allowed in the proposed rule. In the absence of adequate data, the proposed rule did not set one performance standard for all release detection methods. Instead, each method was required to meet performance and design standards specific to that method. These standards were based on the experience of state programs that indicated these methods were effective under the specified conditions.

c. *Major Changes in the Final Rule.* Although the overall release detection strategy has not changed from the proposal, specific requirements on how and when release detection must be conducted have changed. The four most significant revisions to the proposed regulations include:

- More frequent monitoring of existing unprotected tanks during the 10-year upgrade period;
- Less frequent monitoring of new and upgraded tanks until age 10;
- Gradual phase-in of release detection based on tank age; and
- More stringent requirements for pressurized piping.

These changes, discussed generally in section III.B. of today's preamble, are presented in detail in the appropriate parts of the section-by-section analysis below. Additional revisions made to the release detection requirements are also discussed in the section-by-section analysis.

In addition, three important organizational changes were made in response to commenters' concerns. First, in the proposed rule, the requirements for hazardous substance USTs were in a subsection of the petroleum UST requirements, and several commenters noted that they had difficulty finding and understanding the requirements for these systems. In response to this concern, the release detection requirements for petroleum and hazardous substance USTs have been

separated in the final rule and placed in §§ 280.41 and 280.42, respectively.

Second, tanks and associated piping were treated in the proposed rule as a single unit. Each method of release detection applied to the tank was required also to detect leaks from piping. In another section of the proposed rule, there were additional release detection requirements that could only be applied to the piping. Commenters noted that this structure limited flexibility in meeting the release detection requirements by forcing the same method to be used for tanks and piping. They noted that the same method may not work for both tanks and piping and several viable detection methods for piping were excluded. In addition, the information on causes of release indicates that piping is generally a greater release threat than tanks. Thus, today's final rule treats piping separately from and with equal importance to the tank. The release detection methods for tanks and piping have been separated in the final rule into §§ 280.43 and 280.44, respectively.

Third, in the final rule, the release detection requirements for each type of UST system, including allowed methods and required frequencies of testing, have been consolidated into two brief sections (§§ 280.41 and 280.42). The detailed performance standards for each method of detection are now contained in §§ 280.43 and 280.44. The section-by-section analysis of the preamble parallels this structure so that all discussion of the phase-in schedule, the methods and combinations of methods allowed for each type of system, and frequencies of testing are discussed first (sections IV.D.2. a–c.). Discussion of research and public comments on the technical details of each detection method for tanks and piping is reserved for later sections (IV.D.2. d–e.).

2. Section-by-Section Analysis

a. *General Requirements (§ 280.40).—(1) Use of One Release Detection Method.* In the proposed rule, a single release detection method could be used to meet the requirement to detect releases from both the tank and connected piping. As discussed in more detail in the preamble to the proposed rule (52 FR 12718–12719), the use of redundant methods of release detection was not required at each UST site because the Agency was not convinced that the required use of these "backup" methods would provide significant environmental gains in comparison to the adverse impacts on program implementation. Some commenters opposed allowing only one method of release detection primarily because they believe all the methods are unreliable and insufficiently developed, particularly external methods. Other commenters, however, agreed with EPA's position on this issue and cited their own satisfactory experience with the various methods.

The final rule continues to allow the use of a single properly installed and operated release detection method for tanks when testing is performed monthly. When less frequent monitoring is used it must be backed up by use of monthly inventory control. Owners and operators remain free to use multiple methods if they desire, and state and local programs can require redundant systems.

EPA decided against requiring multiple methods because frequent use of a single detection method, when combined with the prevention measures contained in other sections of the rule, is sufficient to protect human health and the environment. The performance standards, design criteria, and limitations on the methods contained in the rule are intended to ensure that the optimum performance of each release detection method is achieved. Repeating the test monthly dramatically reduces the possibility of failing to detect a leak. Each test serves as a separate check of the integrity of the UST system. Field reports confirm the success of single methods in detecting releases from UST systems. For example, Dade County, Florida, has detected over 350 releases using ground-water monitoring wells. EPA's research on the best ways to use some of the different release detection methods is directed towards improving the field performance of various types of methods. For tanks and suction piping systems, one detection method, combined with prevention efforts, should virtually eliminate undetected releases.

The Agency chose not to rely on one method of detection for pressurized piping, however. Even with good efforts at prevention, these systems may still result in significant releases. Consequently, the final rule requires existing and new pressurized lines to use both automatic line leak detectors and another leak detection method (either monthly monitoring or annual line tightness tests).

(2) Scope of Release Detection (§ 280.40(a)(1)). The proposed rule provided a general requirement that the release detection method be "capable of detecting a release from any portion of the UST system." The purpose of this requirement was to ensure detection of both tank and piping leaks. A few commenters objected to the general nature of the wording of the requirement because it includes some portions of the UST system such as vent lines, fill pipes, and bungs on the top of the tank that do not normally contain regulated substances. Some tank tightness test methods do not test the top of the tank and, thus, do not detect the presence of holes in the vents and bungs. These portions of the tank only leak when the tank is overfilled.

EPA shares the concern of commenters that a strict interpretation of the wording in the proposed requirement could result in some release detection methods, particularly non-overfill tightness tests, not being allowed because they cannot detect releases from portions of the UST system that do not normally leak. The final rule's wording that the methods must be able to detect a release from "any portion of the tank and the connected underground piping that routinely contains product" is intended to make clear that tank tightness test methods that do not overfill the tank can be used, as long as they meet the other applicable performance standards and another acceptable method is used to test or monitor the piping.

Furthermore, releases from the top of the tank or vents occur during overfills, which are not a normal operating condition. Prevention of overfills is addressed in § 280.20(c), § 280.21(d), and § 280.30, which together require that all new and upgraded tanks have overfill prevention equipment and spill catchment devices and that proper filling procedures be followed to prevent these "nonoperational" releases. These requirements are intended to prevent these types of releases; thus, EPA does not believe methods of release detection must be used that will detect them.

The additional information on causes of release that EPA has collected since the proposal (see section II.F. of this preamble) reinforces the fact that piping is a major source of releases. Therefore, the final rule continues to require that the methods of release detection that are used must be capable (either singly or in combination) of detecting a release from both the tank vessel and the piping that conveys product.

(3) Installation, Operation, Calibration, and Maintenance (§ 280.40(a)(2)). To ensure that the release detection method will reliably detect releases once in place, the proposed rule required installation, calibration, operation, and maintenance according to manufacturers' specifications. At proposal, the Agency decided against requiring certification of installers and servicers of release

detection equipment because these programs are not currently developed and there are other effective approaches for ensuring proper installation (52 FR 12719). As discussed below, commenters stated that the rule should require certification of installers and servicers of release detection equipment. After consideration of these comments, EPA continues to believe that such a requirement would hinder rapid installation and flexibility in designing effective ways to regulate installers. Today's final rule will remain as proposed for the reasons discussed below.

The UST release detection field is a new and proliferating area of technology, and, because of this, some commenters suggested that a certification program should be required for installers and operators of release detection equipment to ensure high quality work and to assist owners and operators in selecting qualified personnel. Certification by EPA or state agencies was suggested. Other commenters felt that a state or Federal certification program would limit the number of installers, would increase the cost of release detection provided by those installers who were already certified, and would delay widespread application of release detection methods. Some of these commenters suggested alternatives to state or Federal installer certification.

By including the performance standard in the proposed rule, EPA acknowledged that ensuring proper installation and operation of equipment is important. Although a certification program is a viable approach to achieving this goal, EPA disagrees with commenters who felt that state or Federal certification is the only way to ensure quality installations. Existing state programs that lack certification programs have been effective at discovering releases. As commenters noted, there are numerous possible approaches to ensure proper installation. Mandating certification would unnecessarily restrict states from designing alternative effective ways to regulate installers.

EPA agrees with commenters that the time required to conduct a certification program would seriously hinder rapid implementation of release detection. Installing leak detection quickly on existing tanks, which are primarily unprotected steel, will be of significant environmental benefit, even in the absence of certification. For these reasons, no additional requirements have been included in the final rule to ensure release detection installation and operation.

(4) Meeting the Performance Standards (§ 280.40(a)(3)). In the proposal's preamble (52 FR 12714–12718), the Agency described three possible approaches to ensure the quality of release detection equipment used to meet the regulations. EPA solicited comments on a general performance standard, certification of methods, and a method-specific performance standard. The Agency proposed the method-specific approach because it offered the greatest flexibility and facilitated rapid program implementation. Commenters generally agreed with the advantages and disadvantages ascribed to each approach, and many concluded that the method-specific approach is the best possible at present. The final rule thus retains method-specific standards by requiring each method used meet the standards in § 280.43 or § 280.44.

Commenters generally agreed with both the explanation and the conclusion in the proposal preamble concerning the use of method-specific release detection standards. Many commenters believe that the method-specific approach would be the most realistic approach given our current knowledge and that it would allow the widest range of choices among effective technologies. Some commenters, however, believed a general standard should be formulated based on the standard specified for tank tightness testing (0.1 gallon per hour). Because the method-specific standard would allow varying performance standards, these commenters felt that many owners would simply select the cheapest, least effective method. Other commenters recommended a certification approach, feeling that consistency was less important than ensuring that the regulated community knew exactly what devices met the standards.

The preamble to the proposal contained an extensive discussion of the merits of each of the three approaches to regulating release detection. One approach considered by the Agency was to specify a general standard for the leak rate or quantity which must be detected by a method and not specify individual methods or restrictions on their use. This approach was viewed as providing the most consistent level of performance and the one that best challenged manufacturers to develop defensible performance claims for their equipment. This approach is not used in the final rule for two reasons. First, the Agency does not have sufficient information to relate leak rates to the quantity of product detected by external methods under all possible site conditions. Second, eliminating the specific methods in the rule would slow program implementation by forcing owners and operators to wait for detailed, extensive performance information before conducting release detection. The final rule, however, incorporates the flexibility of a general performance standard by allowing, in addition to specific methods, any method which can detect a 0.2 gallon per hour leak rate with a probability of detection of 0.95 and a probability of false alarm of 0.05 within a month. For a discussion of this addition, see section IV.D.2.a.4. of today's preamble.

A certification approach applied at the federal level would provide the regulated community with the clearest direction concerning which release detection equipment was acceptable. This approach is not used in the final rule because it would slow program implementation and reduce the choices available to owners and operators over the next several years. Further, it was not viewed as necessary because comparable performance information for each method can be generated by private efforts without federal involvement.

Research results and data submitted by commenters after the proposal have reinforced the Agency's belief that all of the methods that were proposed are effective release detection techniques if used within the context of certain constraints (discussed in the section on individual methods). EPA believes that offering a broad selection of methods will make it easier for owners and operators to comply with the regulation. Also, a broad selection is consistent with the encouragement of existing industry trends and state programs, which have utilized a variety of release technologies and which have been proven effective at discovering leaks. Information gathered by EPA suggests, but does not conclusively prove, that all of the methods included in the rule can detect at least a 0.2 gallon per hour release within 30 days when used in accordance with the restrictions on that method. The Agency believes that all methods will eventually be able to prove they reliably detect 0.2 gallon per hour releases and has included that as a standard for approving new methods. This standard is discussed in section IV.D.2.a.4. Allowing a range of methods with specific standards does not mean the cheapest, least effective method will be selected, because cost and effectiveness are not necessarily related. For instance, under some site conditions

(e.g., ground water within the excavation zone), manual ground-water sampling may be the cheapest method and will reliably detect releases substantially smaller than 0.2 gallon per hour.

(5) Delay in Detection Probabilities (§ 280.40(a)(3)). As discussed in the proposal preamble (52 FR 12719), a complete release detection performance standard includes not only the leak rate or quantity that a method must detect, but also the probabilities of detection (PD) and false alarm (PFA). In the proposed regulations, complete standards of this type were included for in-tank detection methods in the section on specific methods. Research results and commenters' concerns have caused the Agency to make several important changes in the final rule. The probabilities have been moved to the general requirements section (§ 280.40(a)(3)) and changed slightly, and the effective date has been delayed for two years. These changes are discussed below.

The proposal preamble emphasized the statistical nature of detecting leaks and the large number of variables that add to the uncertainty in declaring a leak. The probability of detecting a leak is dependent on its size. All methods are more likely to discover large leaks than small ones. With regard to detecting the smallest leaks, the Agency recognized that good methods properly operated may mistakenly declare a leak when none exists (false alarm) or fail to discover some leaks (missed detection). Consequently, the standards for tank tightness testing and automatic in-tank monitoring included the requirement that methods detect a specified leak rate with a PD of 0.99 and a PFA of 0.01. The Agency remains convinced that specifying probabilities in this manner better defines the performance standards and should help owners and operators make informed choices about leak detection.

The final rule retains the PD and PFA as part of the leak detection performance standard. The probabilities have been removed from the standards for specific methods and placed in the general requirements section. This change expands the coverage of the probabilities to include automatic line leak detectors and interstitial monitors as well as tank and line tightness tests and automatic in-tank monitors. The Agency made this change to clarify that all leak rates or quantities specified as part of a method-specific standard in § 280.43 or § 280.44 must be detected with the same level of reliability.

The proposed rule set the PD at 0.99 and the PFA at 0.01. In the final rule, the PD has been changed to 0.95, and the PFA has been changed to 0.05. The Agency made this change for several reasons.

First, the Agency is not convinced that the 0.99/0.01 specification was a realistic standard given the wide range of variables affecting leak detection results. EPA's study of tank testing methods has attempted to determine performance at this level of precision and only 2 methods of the 25 studied could meet the standard. No study of this sort has been undertaken for the other methods covered by the probabilities in the final rule. Further, EPA does not plan to conduct studies similar to the one for tank tightness testing for other leak detection methods. Rather, the Agency intends that manufacturers should evaluate their methods to prove they meet the standard in the rule. Thus, the change in the final rule will encourage manufacturers to undertake this research. EPA is developing procedures for testing release detection equipment in a common way to help manufacturers in evaluating their equipment. EPA chose the 0.95/0.05 specification in the final rule because it is a level of performance attained by a modified commercial tank test method in the National Motor Fuel Survey. In addition, several commenters felt that a probability of detection of 0.95 was more realistic and was adequate to protect human health and the environment.

Because the final rule requires frequent-to-continuous monitoring, the change in probabilities will have little environmental impact. For example, a test which detects 0.1 gallon per hour leaks 95 percent of the time in one test will discover 99.9 percent of 0.1 gallon per hour leaks in 3 consecutive tests. Further, tests that meet this standard are virtually certain to detect leaks larger than this threshold and will detect a significant number of leaks below the threshold. Under either standard, large leaks will be caught immediately and small leaks will be discovered before they cause environmental damage.

The final change in this section of the final rule is a delay in the effective date of the probabilities. As discussed above, few methods have been proven to meet the complete standard specified in the proposed rule. However, preliminary results from the EPA's tank testing study (Notice of Availability; 53 FR 10403) indicate that several methods could meet the standard with simple changes in procedures and equipment. The Agency also wanted to allow time for manufacturers of automatic tank gauging systems, automatic line leak detectors, and interstitial monitors to prove that their systems meet the complete standard. The Agency believes manufacturers can make the necessary changes to their methods and evaluate their performance in 2 years. Until the probabilities become effective, methods need only detect the leak rate or quantity specified for that method in § 280.43 and § 280.44. Methods installed or conducted during this 2-year phase-in will not need to be performed again or replaced after the probabilities become effective, but all methods used after that period of time will have to achieve the probability standard.

(6) Reporting of Positive Monitoring Results (§ 280.40(b)). The proposed rule contained a provision in Subpart E that the owner and operator must report all suspected releases indicated by the results of release detection monitoring. Perhaps because this release detection reporting requirement was in a different subpart from the release detection technical requirements, commenters stated that it was unclear when a suspected release needed to be reported. To clarify and strengthen the requirement to report all suspected releases, a provision has been added to Subpart D (§ 280.40(b)) in the final rule explicitly stating that any indication by the release detection method that a release has occurred must be reported in accordance with reporting procedures described in Subpart E.

It is intended that all release detection equipment be operated at least at the level of sensitivity indicated in the performance standard. For example, 2 years after the effective date of the rule, the tightness test threshold (i.e., test result that indicates a suspected release) should be set to detect 0.1 gallon per hour leak rates with a PD of 95 percent and a PFA of 5 percent; this threshold value may differ for various tightness testing devices. Manufacturers of the release detection equipment must determine what this threshold value must be to meet the performance standard and inform operators of their equipment. Until the manufacturer sets such a threshold, tank test operators should continue to use the current 0.05 gallon per hour threshold. For most tank testing methods, this will approximate the threshold level for detecting 0.1 gallon per hour leaks. The owner and operator would report a suspected release when a test result exceeds 0.05 gallon per hour or the threshold value provided by the manufacturer in accordance with § 280.50.

It is important to note that the performance standards such as 0.2 gallon per hour or ⅛ inch of product on

top of the ground water are device performance standards set to exclude less effective equipment. The standards are not allowable contamination levels. Owners and operators are still responsible for correcting leaks and cleaning up any product released to the environment. It is in their interest to use the most effective release detection equipment and operate it so the device detects releases as quickly as possible to avoid potentially costly corrective action.

(7) Phase-in of Release Detection (§ 280.40(c)). The proposed rule required a 3- or 5-year phase-in of release detection, with the shorter phase-in period applied to USTs without protection from corrosion and the longer phase-in to those USTs with corrosion protection. These phase-in periods were based, in part, on the experiences of several state and local UST programs in initiating release detection under a phase-in schedule that was typically 3 to 5 years (52 FR 12677, 12703–12704). This phase-in was proposed to ensure that tanks with the greater risk of leaking (those unprotected from corrosion) had release detection installed first. As discussed in the proposal preamble, the total phase-in period covers 5 years to allow enough time for the release detection industry to respond to the demand, owners and operators of existing tanks to plan their needs, and implementing agencies to develop their programs. The proposed rule also required closure of existing USTs that could not meet the phase-in schedule.

Commenters recommended a variety of phase-in periods and generally recommended age as the most appropriate basis for the phase-in. Therefore, § 280.40(c) of the final rule phases in the implementation of release detection over 1 to 5 years based on the age of the system (oldest tanks first). Requiring the oldest tanks to phase in release detection sooner, within 1 year, ensures that those UST systems most likely to leak are addressed first. The final rule also retains the proposed requirement of closure of any USTs that cannot meet the release detection requirements by the phase-in date. A significant addition to the final rule is the requirement that existing systems with pressurized piping must retrofit line leak detectors within 2 years. Comments received regarding the phase-in of release detection are discussed in more detail below.

Commenters recommended a range of time periods from 3 to 10 years for completing the phase-in of release detection. Commenters supporting a longer period believed that the proposed phase-in periods would overburden the release detection industry, resulting in poor quality installations and late compliance, and cause economic hardship to owners and operators. Those commenters recommending shorter phase-in periods believed that a tighter schedule would prevent significant environmental damage. The Agency has decided in the final rule to retain the overall 5-year phase-in time period for the same reasons outlined in the proposal preamble (52 FR 12677, 12703, and 12704). Based on experience at the state and local level, EPA does not believe release detection can be installed and conducted at over 700,000 UST sites nationwide in less than 5 years. Not only will it be difficult to do in less than 5 years, but some of the release detection systems installed on a more expeditious timetable could be lower quality as a result. As discussed above, however, the greatest release potential will be during this interim period. Thus, lengthening the phase-in period would result in unacceptably greater environmental damage. Moreover, even accepting commenters' concerns about economic burdens, lengthening the phase-in would not provide a resolution because retrofitting would still be necessary ultimately and would be coupled with greater corrective action costs brought on by the delay in detection. For these reasons, today's final rule retains the 5-year phase-in period.

During the 5-year phase-in period, it is important to direct release detection efforts at the existing UST systems most likely to leak. Many commenters recommended achieving this goal by phasing in release detection based on the age of the UST system. They pointed out that this approach also has the advantage of stabilizing the demand for release detection, resulting in less burden for both the release detection industry and the owners and operators. It also has the advantage of addressing first the tanks that are most likely to leak. Several commenters pointed out their concerns that if the phase-in is not sequenced in its implementation, the regulated community will collectively wait until the last minute, and unavoidable further delays will ensue. A few commenters opposed an age-based schedule because it was too simplistic or ignored other important factors.

The Agency agrees with commenters suggesting a release detection phase-in schedule based on age. Although age is not the only factor in determining when a tank will leak, it is an important factor that is readily understood and determined and, therefore, easy to implement. This approach is already being used successfully in several state and local programs. The approach in the final rule is not a radical departure from the proposed phase-in schedule. The causes-of-release study indicates that most existing protected USTs are less than 10 years old. Under both the proposed and final phase-in schedules, these tanks must phase in release detection within 5 years after promulgation. EPA believes that the main impact of the revised schedule will be to spread out the phase-in of release detection on unprotected USTs, which represent over 75 percent of UST systems, over years 1 through 4 rather than require it all at year 3, resulting in fewer implementation bottlenecks.

Some commenters recommended a class approach (sensitive areas first) to phasing in release detection. Although the concept of retrofitting release detection in vulnerable areas first is appealing, EPA does not believe it is possible to identify sensitive classes in any meaningful way at the Federal level (see section III.C. of this preamble). States can choose to phase in release detection based on a class approach without losing the ability to receive state program approval (see § 281.33) if they complete a phase-in of release detection at all existing tanks within 5 years and pressurized piping in 2 years.

EPA's information on the causes of release clearly indicates that pressurized piping represents a major source of uncontrolled releases. None of the requirements for existing systems in the proposed rule addressed the threat of catastrophic releases from pressurized piping. Consequently, in the supplemental notice (52 FR 48638), the Agency requested comment on the idea of requiring existing systems to retrofit line leak detectors on pressurized piping. Commenters generally felt that it was appropriate to require such a retrofit and recommended a variety of phase-in schedules. EPA agrees with commenters who recommended a short phase-in schedule because this piping is a significant environmental hazard, retrofitting line leak detectors is relatively easy and inexpensive, the devices are highly effective (see section IV.D.2.e.1. of the preamble), and many systems are already equipped with the devices. Consequently, the final rule requires that existing pressurized piping meet the same standards as new piping 2 years after the effective date of the rule (see section IV.D.2.b.2. of the preamble for piping requirements).

(8) Closure if Release Detection Is Not Installed (280.40(d)). In the proposed rule, EPA required closure of an existing

UST system if a method of release detection was not installed by the end of the specified phase-in period. Most existing USTs are not protected from corrosion and, thus, are likely to corrode and eventually leak. The selected phase-in schedule discussed above is considered the maximum time that these systems should be allowed to operate without release detection. Therefore, the final rule continues to require that UST systems be closed if release detection cannot be retrofitted or applied by the phase-in date.

One commenter noted that the closure procedures of the proposed rule required a site assessment of the excavation zone before closure, the results of which might delay closure beyond the allowable time frame. Although the Agency recognizes that closure can be a time-consuming process, it should not require any more time than the selection and installation of release detection equipment. The final rule requires that, by the phase-in date, the owner must remove the tank or fill it with inert material and complete the site assessment. Should a release be discovered, responding to the findings of the site assessment is part of corrective action and need not be completed by the phase-in deadline. Owners and operators are expected to plan ahead to ensure that they complete installation of release detection or the closure procedures by the specified date. This will allow the implementing agency to ensure compliance with both requirements with a single inspection. For these reasons, EPA has retained in the final rule the provision to complete closure by the end of the phase-in period.

(9) Other Changes. One of the general requirements in the proposed rule required a site assessment prior to the installation of any external leak detection system to ensure compliance with the performance standards for the particular method used. To clarify that the site assessment is intended to include only an analysis of selected factors within or beneath the excavation zone, the general requirement has been deleted, and the only assessment requirements are contained in § 280.43 (e)(6) and (f)(7) of the final rule. These changes are discussed below.

The importance of a site assessment in correctly selecting and applying an external method was discussed in the proposal preamble (52 FR 12720–12722). Although numerous factors were listed in the proposal preamble concerning a site assessment, EPA stressed that the assessment should, at a minimum, ensure compliance with the method-specific restrictions in the proposed rule. EPA requested comment on the proposal to include these or other site variables in the assessment requirement. Some commenters stated their belief that a complete site assessment is too extensive a technique to be required for demonstrating the performance of external release detection and does not provide much useful information because conditions at the site change constantly. Most commenters, however, agreed that a site assessment is appropriate before installation of external release detection systems. In fact, these commenters wanted to extend this provision by requiring site assessments for all release detection methods, thereby requiring a quick national survey of all UST site conditions. Others suggested at least requiring a site assessment periodically at all USTs.

The Agency continues to believe that site assessment of the excavation zone is necessary to ensure the reliability of external methods. The Agency also agrees with comments stating that the site assessment requires no more information beyond checking a site for compliance with the restrictions on the methods. Conditions in and below the excavation zone must be known before an external method is selected or installed because inappropriate excavation conditions can render some external methods ineffective. Internal methods are not typically affected by site conditions, and those methods that are affected (e.g., water table level can affect tightness tests) can account for these conditions without performing a site assessment. The major factors determining the effectiveness of groundwater and vapor monitoring were included in the method-specific performance requirements in the proposed rule, and, for most sites, an adequate assessment will require evaluation of only those factors.

The Agency decided against requiring a more extensive, more frequent, or a more widely applied site assessment because of the unnecessary burden it would place on implementing agencies and the possible delays in release detection compliance it would cause. The Agency believes that the greatest benefit for existing systems, short of upgrade or replacement, will be obtained by conducting release detection as quickly as possible. The site assessment for certain external methods is retained in the final rule in § 280.43 (e)(6) and (f)(7) because EPA believes it is important to ensure that these methods work properly. The site assessment is not intended to be a general search for contamination at the site. Any contamination found, however, must be reported, and the owner and operator must comply with the corrective action requirements of Subpart F. A more detailed search for contamination is required when tanks close under Subpart G.

b. *Requirements for Petroleum UST Systems (§ 280.41). (1) Requirements for Petroleum Tanks (§ 280.41(a))—(a) Overview.* The proposed rule offered a variety of release detection methods for petroleum UST systems. New or existing UST systems could perform accurate monthly monitoring using automatic tank gauges, vapor monitors, groundwater monitors, interstitial monitors, or other methods approved by the implementing agency. The proposal allowed two exceptions to the monthly monitoring requirement. First, when combined with monthly inventory control, tank tightness tests could be performed semiannually at new UST systems. The proposal allowed semiannual tightness testing and inventory reconciliation for new tanks because the combination was believed to be as accurate as monthly monitoring. Second, when combined with monthly inventory control, tank tightness tests could be performed less frequently at existing USTs during the 10-year upgrade period (every 3 years for bare steel systems or every 5 years for protected tanks). Less infrequent tank tests for existing USTs were permitted during the phase-in period because the Agency believed the release detection industry lacked the capacity to perform monthly monitoring at all existing tanks in 3 to 5 years.

The use of monthly monitoring methods has been retained as an option for all petroleum UST systems in the final rule. The final rule also contains two exceptions for tightness testing similar to those in the proposal. An overview of the release detection requirements is presented in Figure 4. During the 10-year upgrade period at

existing tanks that are not adequately protected from corrosion and lack spill and overfill equipment, the rule now requires either (1) annual tank tests and monthly inventory controls, or (2) monthly monitoring. Tanks that meet the standards for new or upgraded tanks are required either (1) to conduct tank tests every 5 years combined with monthly inventory controls for a 10-year period following the date of installation or upgrade or until 1998, whichever is later, or (2) to conduct monthly monitoring. Also, in both cases, by the end of the 10-year period, these USTs must be using an approved monthly monitoring method.

BILLING CODE 6560-50-M

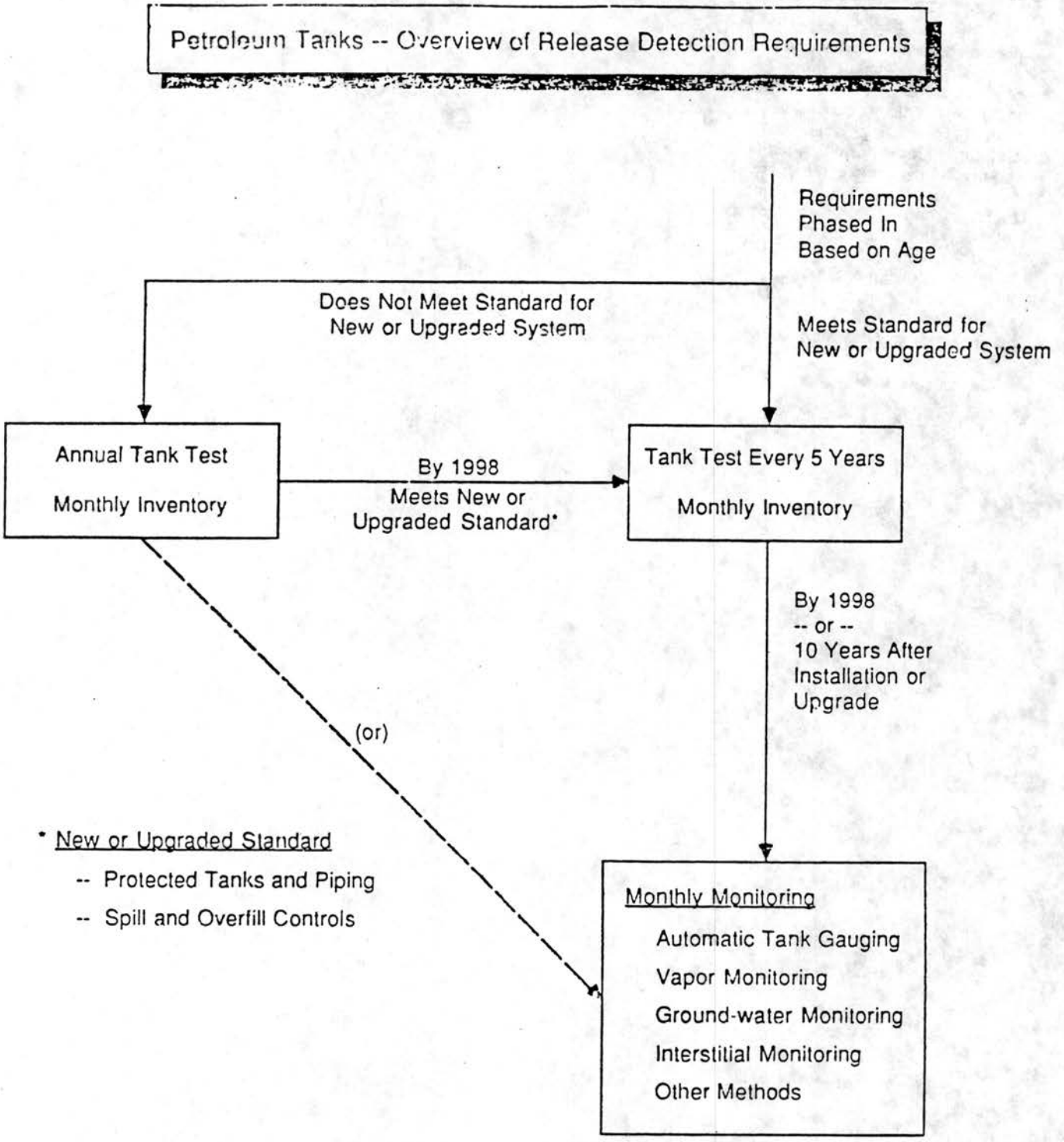

Figure 4

BILLING CODE 6560-50-C

(b) Monthly monitoring. In the proposal preamble, EPA discussed a variety of possible release detection strategies ranging from continuous monitoring to an infrequent "check" of the tank system (52 FR 12676–12677). "Frequent-to-continuous" detection methods were proposed by the Agency because more frequent sampling improves the chances of finding leaks and limits the length of time over which leaks can progress unchecked. As a result, the proposal required tanks to be monitored at least monthly unless the owner or operator chose an option that included less frequent tank tightness testing in combination with monthly inventory control. (Monthly inventory control does not by itself meet the requirements for "monthly" monitoring and must be combined with periodic tightness testing.)

Commenters were divided over whether monthly monitoring provides adequate environmental protection and whether it was unduly burdensome. EPA continues to believe that the monthly monitoring frequency offers effective environmental protection. Moreover, checking the release detection equipment once a month is not difficult or expensive, according to several commenters and Agency research. More frequent monitoring would necessitate the use of continuous monitors, which are not needed at all sites and which may be less effective at some sites. Thus, the final rule (§ 280.41(a)) requires monthly monitoring as a baseline for all new and existing petroleum UST systems.

(c) Tank Tightness Testing and Inventory Control (§ 280.41(a)(2)). In the preamble to the proposal, EPA noted practical problems with conducting monthly monitoring at all existing tanks over the proposed phase-in period. These methods have not been practiced on a mass scale in the past, and the Agency expressed the concern that the industry did not have sufficient capacity to capably install monthly monitoring at 1.4 million USTs in 5 years. Because tank tightness testing and inventory control are commonly used as effective release detection methods not requiring the installation of permanent equipment, EPA allowed these methods as options for existing USTs during the 10-year phase-in period for upgrading (see section IV.D.2.b.1).

The large number of existing systems to be tested and the limited industry capacity caused the Agency to propose less frequent tank testing for existing systems than for new systems: every 3 years at unprotected existing systems and every 5 years at protected existing systems. The proposed frequencies were selected in recognition of the differing probability of releases at unprotected and protected UST systems. For new tanks, the proposal allowed monthly inventory control combined with semiannual tightness testing because the combination was believed to be as effective as monthly monitoring using the other approved methods.

Many commenters were concerned about the use of tank tightness testing and inventory control as an alternative to the monthly monitoring requirements. Commenters particularly questioned the appropriateness of more frequent monitoring being proposed for new tanks than for existing unprotected tanks. Although there was a variety of opinions on what the proper frequencies were, commenters uniformly felt that new tanks were less likely to leak and should be monitored less often than existing tanks. The new information presented in the "Causes of Release Study" corroborates these concerns that the most serious environmental threat is posed by older, unprotected steel tanks (see section II.F. of the preamble). Available evidence demonstrates that new or upgraded tanks are extremely unlikely to leak over their normal operational lifetimes especially within 10 years of installation or upgrade. EPA solicited comments on this issue and this new information in the supplemental notice published December 23, 1987 (52 FR 48641–48642). Most commenters agreed with the Agency's conclusions on these matters, which are reflected in the final rule.

The Agency continues to believe that monthly monitoring cannot be installed on all UST systems within 5 years and that allowing tightness testing combined with inventory control will ensure that release detection can be provided to all existing USTs as soon as possible. During the phase-in period, EPA believes that priority should be given to requiring application of available release detection resources to older bare steel systems. Accordingly, in § 280.41(a)(2), the final rule requires that if owners and operators of existing unprotected UST systems choose tightness testing, it must be performed yearly rather than every 3 years as proposed. Existing protected systems (with spill and overfill prevention equipment) are required to be tested every 5 years during the 10-year upgrading period, the same as proposed. Because extremely few new or upgraded tanks are expected to leak during the first 10 years of their operational life, under the final rule (§ 280.41(a)(1)), these tanks may also conduct tightness testing every 5 years. This approach has the advantage of encouraging upgrade or replacement of unprotected tanks before the end of the phase-in period, resulting in improved environmental protection. At the end of the 10-year upgrading period or at the end of the 10-year operational life of new or upgraded systems, these tanks must be equipped with a monthly monitoring method.

The proposed rule required tank tightness testing to be combined with inventory control (or another method of equivalent performance) for several reasons. Frequent tank tightness testing is not practical because it requires extensive preparation, including a shutdown of operations. It is, however, a sensitive method that provides very accurate results. Manual inventory control is less sensitive but can provide nearly continuous (daily) release detection that can reliably detect larger releases. The rule proposed the combination of the two techniques to compensate for each component's disadvantages. Several commenters on the proposed rule viewed the combination of techniques as redundant and stated that each method is adequate on its own. Other commenters agreed that, separately, each of these techniques would be an inadequate release detection method.

The Agency evaluated different approaches to tank tightness testing and inventory control since the proposal (Notice of Availability; 53 FR 10403). The results of the studies, which are discussed in more detail in the preamble section on these methods, confirm that monthly inventory control is effective at reliably detecting larger leaks (about 1 gallon per hour) and that tank testing can reliably detect much smaller leaks (0.1 gallon per hour). This research and information submitted by commenters convinced EPA to retain the combination of infrequent tank testing and monthly inventory control in the final rule as an exception to monthly monitoring in certain situations.

The proposed semiannual tightness testing and inventory control for new USTs has been deleted from the final rule, because the Agency does not believe that the combination is as effective as the other monitoring methods. The Agency continues to believe that monthly monitoring is necessary to protect human health and the environment; less frequent monitoring is allowed only as an interim measure. Currently, conducting monthly tank tightness testing is not a practical or economical method. Tank testing methods may be developed in the future, however, that can be performed on a

monthly basis to detect leaks of 0.2 gallon per hour. The final rule allows the use of this method without inventory control once the method is proven to meet the performance standard in the section on other methods (§ 280.43(h)).

(d) Manual Tank Gauging (§ 280.41(a)(3)). In addition to the other release detection methods in the proposed rule, the final rule also includes manual tank gauging. The Agency requested comment on the use of this method in the supplement to the proposed rule (52 FR 48641), citing a study submitted by a commenter on the proposal showing that this method was effective for used oil tanks. EPA conducted an analysis of this study (Notice of Availability; 53 FR 10403) and found that weekly tank gauging can detect 0.2 gallon per hour leaks with a PD of 95 percent and a PFA of 5 percent for tanks smaller than 550 gallons.

Because it provides the same level of protection as other monthly monitoring methods, the final rule allows use of this method for any tank with nominal capacity of 550 gallons or less. Detailed discussion of research and comments on the inclusion of this method is provided in Section IV.D.2.d.(2). of today's preamble.

(2) Requirements for Petroleum Piping (§ 280.41(b)).—(a) Overview. The proposed regulation required that each release detection method chosen for the tank also detect releases from the piping. In addition, new pressurized piping was required to have equipment capable of detecting and shutting off a release of at least 2 gallons per hour unless the piping had continuous or interstitial monitoring. Suction piping that meets certain minimum design specifications was exempt from these release detection requirements.

Commenters agreed that pressurized piping was allowable but that additional release detection requirements were necessary. Some commenters had reservations about automatic shutoff devices and flow restrictors and recommended backup release detection or double-walled piping. New information acquired by the Agency since proposal on causes of release indicates that pressurized piping, along with spills and overfills, is the major source of releases, particularly large-volume catastrophic releases (see section II.F. of this preamble). Because of this new information, the Agency requested additional comment on release detection issues related to underground piping in the supplemental **Federal Register** notice published December 23, 1987 (52 FR 48641–48642).

The final rule has been revised to reflect the importance of preventing and rapidly detecting piping releases by including additional release detection requirements for pressurized piping and further encouraging the use of suction systems. Figure 5 summarizes the requirements for petroleum piping. Pressurized piping must have a release detection device that monitors the line at least hourly and automatically shuts off or restricts product flow or sounds an alarm when there is an indication of a leak. The owner and operator must also conduct either monthly monitoring or an annual line tightness test. The monthly monitoring may include vapor monitoring, ground-water monitoring, interstitial monitoring, or other methods that meet the performance standard or are approved by the implementing agency. The performance standards for the piping release detection methods are contained in a separate section of the rule (§ 280.44) and are discussed in section IV.D.2.e. below.

BILLING CODE 6560-50-M

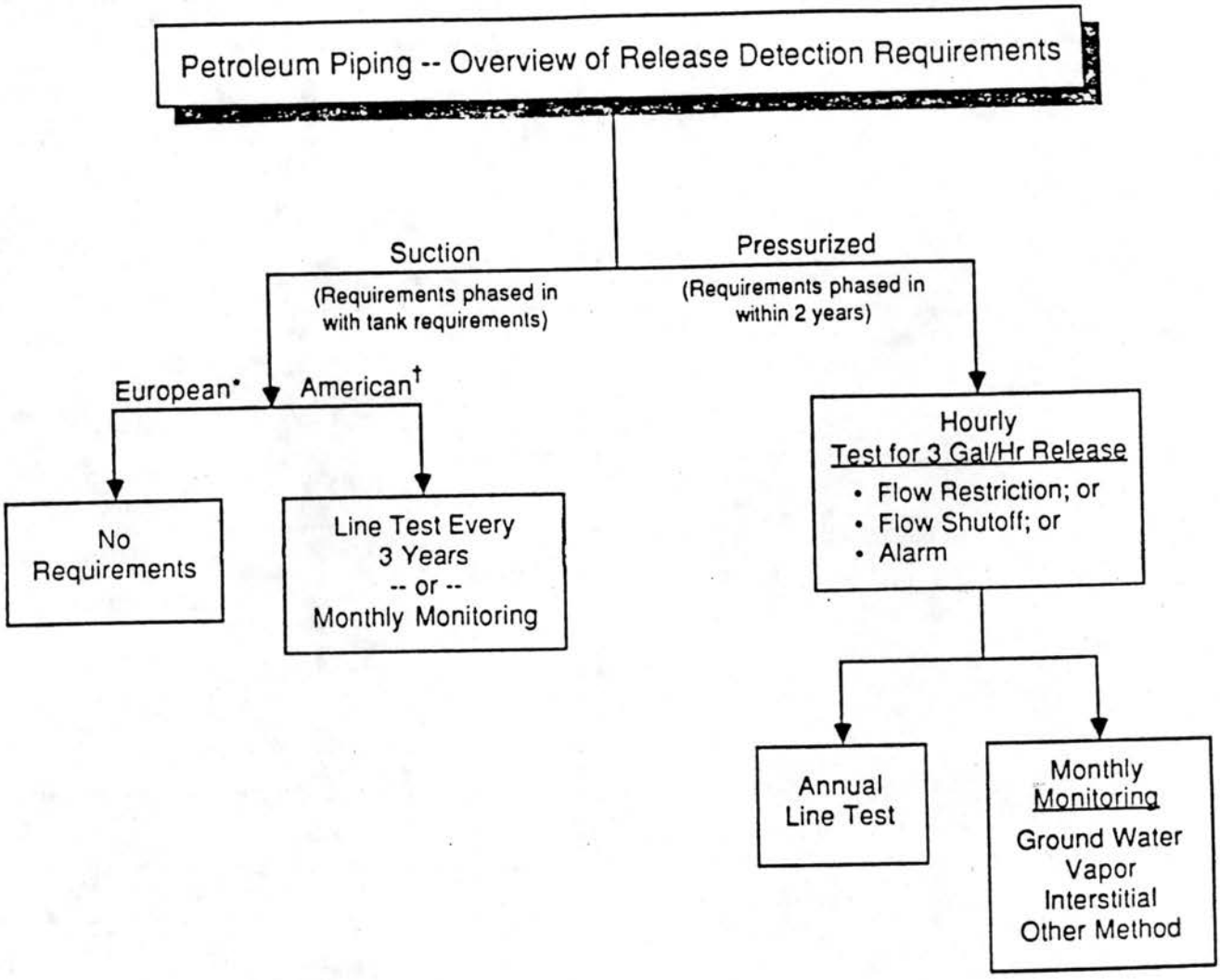

† American : The delivery line has at least one check valve (sometimes called a footvlave) located away from the dispenser, usually near the tank.

* European : The delivery line is intrinsically safe because it is sloped to drain back into the tank and there is only one check valve on the line next to the dispenser unit.

Figure 5

BILLING CODE 6560-50-C

The Agency notes that one release detection method can be used as the sole method if it can meet both the hourly release detection requirement and the annual or monthly release detection requirements. For example, double-walled piping with continuous interstitial monitoring that meets the performance standard continues to be an acceptable option for pressurized piping and would not require shutoffs, restrictors, or tightness tests. The system must be equipped, however, with an alarm that will indicate when a release into the interstitial space has begun.

Suction piping systems meeting the "no leak" criteria described below in subsection (c) continue to be exempt from release detection. Other suction systems must operate with monthly release detection or a line tightness test every 3 years.

(b) Requirements for Pressurized Piping (§ 280.41(b)(1)). As discussed in the proposal preamble (52 FR 12743–12745), the Agency was concerned that pressurized piping, which uses a pump in the tank to force product through the line to the dispenser, could result in large volumes of product being quickly released to the environment through a hole or crack. In contrast, suction piping appears to be intrinsically much safer because product is transferred at less than atmospheric pressure by a pump near the dispenser drawing product from the tank by suction, and failures will result in air or ground water flowing into the pipe rather than product being released during operation. The Agency considered not allowing pressurized piping at new installations but its widespread use, the availability of release detection technology (see discussion below), and some of the operational limitations of suction piping persuaded EPA to include it in the proposed rule.

Commenters agreed with EPA's position that pressurized piping could result in large-volume releases in the absence of release detection but felt that pressurized piping with release detection should be allowed in the final rule. They noted that pressurized piping is widely used, economical, efficient, dependable, and not susceptible to vapor lock. Commenters also noted that suction piping is more expensive to operate and requires longer times to dispense product and that its use is restricted by elevation above sea level, height differences between storage and delivery, flow rate, temperature, and length of horizontal piping. The Agency has continued to allow the use of both suction and pressurized piping in the final rule subject to the requirements discussed below.

- *Immediate Detection of Large Leaks (§ 280.41(b)(1)(i)).*

At proposal, data received from state agencies indicated that piping was involved in 20 to 35 percent of all releases. Pressurized piping was also identified as the most common petroleum dispensing system at new installations. Documented cases raised the possibility of sudden large releases from these systems. These factors led the Agency to conclude that additional release detection was required for pressurized piping so that large-volume releases could be stopped as quickly as possible. The monthly monitoring frequency required for the tank was considered inadequate given the potential environmental damage due to a release from pressurized piping. At proposal, piping pressure sensing methods were commercially available that manufacturers claimed could detect and shut off a release of at least 2 gal/hr from pressurized piping. Although the performance of these devices had not been evaluated, the magnitude of the problem and the availability of control technology caused the Agency to require shutoff devices in the proposed rule. The proposal preamble requested information on the field performance of pressurized piping release detectors (52 FR 12744).

A variety of approaches are available to rapidly detect large leaks in pressurized lines. Two main types of continuous in-line release detection devices are commercially available for pressurized piping: Flow restrictors and flow shutoff devices. Both devices react to pressure behavior in the line. A flow restrictor monitors the increase in line pressure after the dispenser is turned on. If there is a leak in the line preventing the line from reaching operating pressure, the restrictor allows a limited flow of product through the line to the dispenser, and thereby signals a leak to the operator. An automatic shutoff device monitors pressure changes during periods when the dispenser is off. If the line pressure drops enough to indicate a leak, the pump turbine is shut off, and no product can be dispensed. In addition to in-line detectors, continuous interstitial, vapor or ground-water monitors may also give rapid reliable warning when a leak occurs.

Commenters generally agreed with the need for pressurized piping release detection that was conducted more frequently than monthly. Many felt that only flow restrictors should be required because they are widely available and have proven performance. Based on information from UST installers and on causes-of-release data, flow restrictors operating at a 3 gallon per hour detection limit will eliminate 80 to 95 percent of the volume of releases occurring from piping. These devices have been in use for years and can be immediately installed at a large number of existing or new UST installations.

The Agency recognizes that other methods of frequent piping detection can achieve the same level of performance as flow restrictors, however. The proposed rule allowed interstitial monitoring or continuous ground-water or vapor monitoring instead of automatic shutoff devices but did not include a performance standard for these methods. Research conducted since the proposal (Notice of Availability; 53 FR 10403) shows that under certain circumstances ground-water monitoring will not allow immediate detection of a release. To ensure an equivalent minimum level of protection against catastrophic pressurized piping releases, the final rule includes the requirement that all pressurized piping have automatic line leak detectors that provide warning of 3 gallon per hour releases within an hour. EPA expects that this requirement can be met using flow restrictors, automatic shutoff devices, continuous interstitial monitors, and some continuous vapor monitors. Continuous ground-water monitoring may also meet this requirement under certain site conditions (e.g., shallow water table). EPA expects that some of these devices will be sufficiently sensitive to meet the additional monitoring requirements discussed below. If a device meets both standards, no additional monitoring is required. A detailed discussion of the performance of these systems is contained in section IV.D.2.c. of today's preamble.

- *Additional Monitoring for Smaller Leaks (§ 280.41(b)(1)(ii)).*

Commenters suggested the use of inventory control or line tightness testing in conjunction with flow restrictors, shutoff devices, or continuous monitors. The new causes-of-release information acquired since proposal shows even more strongly that piping is a major source of leaks from UST systems. Because of the importance of controlling pressurized piping releases, EPA agrees that additional release detection beyond the immediate detection discussed above is necessary. Flow restrictors may not detect small releases, so additional monitoring is necessary to detect these releases. Therefore, the final rule has been revised to require an annual line

tightness test or monthly monitoring using one of the accepted methods for tank monitoring. Line tightness testing is more sensitive than the other methods (see section IV.D.2.e. below) and so can be conducted less frequently for equivalent protection. Further, because of the problems cited by commenters with the reliability of flow restrictors and the ability of operators to override them, the final rule also requires that the operation of the line leak detector be checked annually in accordance with manufacturer's requirements. This system of checks will limit the likelihood that pressurized piping will release large volumes suddenly. This approach, coupled with requirements for corrosion protection and careful installation and testing of piping (which will significantly lower the incidence of piping releases over time), will protect human health and the environment.

• *Secondary Containment for Piping.* Some commenters recommended that secondary containment with interstitial monitoring be required for all pressurized lines. The Agency feels, however, that the release detection options described above for single-walled pipes are protective of human health and the environment and that the additional stringency gained by double-walled pipes does not need to be required. EPA also notes that secondarily contained piping is a relatively new technology that would require significant new training of installers to "de-bug" the applications of this technology for widespread use. In any event, the monthly or annual tests will detect the small slow leaks from piping while the shutoffs or restrictors will detect the large releases. EPA agrees that secondary containment for piping is environmentally protective, and owners and operators may choose to install continuous interstitial monitors which meet the above standards.

(c) Requirements for Suction Piping (§ 280.41(b)(2)). In the proposed rule, all release detection requirements were waived for suction piping that meets six design and operating standards concerning pressure, slope, run of the piping system, and use of properly located check valves. This piping design, common in Europe, ensures that little, if any, product will be released if a break in the line occurs. The Agency also felt that this exemption would encourage the use of suction piping over pressurized piping wherever possible, which is desirable because suction systems are less likely to leak than pressurized systems. Suction systems which do not meet the criteria for exemption were required to be monitored in the same manner as the tank, because the Agency believed small, continuing releases were possible from these systems. Changes in the requirements for both exempt and non-exempt systems are discussed below.

• *Design Criteria Revised.* The proposed rule contained design criteria for exempt suction systems concerning the number and placement of check valves and the slope of the piping because small releases can occur in an improperly designed or installed system. Two of these criteria have been deleted and one criterion has been added in the final rule. First, commenters noted that the 2-percent slope mandated in the proposed rule is difficult to meet using current design practices, and the API and PEI codes of practice recommend a 2-percent slope. Commenters also noted that a 2-percent slope decreases the maximum distance between the tank and the pump, thus limiting station design. In the final rule, therefore, the specific value for the slope has been eliminated, and only the general requirement has been retained that the slope be such that product will drain back into the tank when suction is released.

Second, the proposed rule also required that suction systems have only one check valve as close to the pump as possible and not have a foot valve. These criteria overlap, however, and the foot valve restriction has been deleted from the final rule. This change does not weaken the final rule because the requirement for only one check valve near the pump will prevent a large volume of product being held in the portion of the pipe from which a leak could occur.

Finally, today's rule contains an additional provision that exempt suction systems must have a means of verifying compliance with the design requirements. In the preamble to the proposal, the Agency noted that suction systems in West Germany are equipped with a means of ensuring that the contents of the line are under less than atmospheric pressure (52 FR 12745). This serves to ensure that if a hole in the line develops the liquid drains back into the tank and is not released to the environment. Although the Agency received no comments directly related to this issue, commenters did note that service contractors frequently correct operational problems with suction systems by adding additional check valves to the line. An inspector could not easily discover this alteration and the system could begin to leak. Consequently, the Agency decided to require that exempt suction systems be equipped with a means for an inspector to readily determine that the system continues to meet the design requirements.

• *Non-Exempt Suction Systems* Under the proposed rule, American-design suction systems, which commonly have a check valve near the tank or at piping unions, were required to have release detection conducted as frequently as for the tank. Commenters on the proposal noted that eliminating check valves at piping unions or near the tank is not practical in some applications and requested that these systems also be exempt from release detection requirements. The causes of release information acquired by EPA clearly indicates that both types of suction piping are dramatically less likely to have large leaks than pressurized systems. Based on this information, EPA requested comment on the use of less frequent testing (every 1 or 3 years) for suction systems in the supplement to the proposed rules (52 FR 48642). Commenters disagreed on an acceptable testing frequency but generally agreed that all forms of suction line pose a limited environmental threat. EPA agrees with commenters who noted that non-exempt suction systems can have small continuing releases under some conditions and, therefore, should not be exempt from detection requirements. Because the leaks from these systems are limited and will usually be signaled by operating problems, EPA believes that a 3-year frequency, in conjunction with required prevention measures, is protective of human health and the environment. The reduced frequency of testing for these systems should further encourage the use of suction systems over pressurized systems, even for applications where the exempt design requirements are impractical. These incentives add to the environmental protection provided by the piping release detection standards.

c. *Requirements for Hazardous Substance UST Systems (§ 280.42).* The proposed rule required the use of secondary barriers with interstitial monitoring at all new or upgraded UST systems storing hazardous substances, unless the owner and operator: (1) Demonstrated that an alternative method of release detection would accurately and reliably detect a release of the hazardous substance from the UST system and (2) obtained approval to use another method from the implementing agency. Also, in the proposal, owners and operators of existing hazardous substance USTs were allowed during the 10-year

upgrade period to use any of the methods of detection allowed for petroleum USTs, if the performance requirements for that method could be met. At the end of the proposed 10-year upgrade period, owners and operators would have to upgrade or replace this release detection with secondary containment and interstitial monitoring unless a variance was approved.

After consideration of numerous public comments submitted on these issues and additional research, EPA continues to believe that release detection and corrective action technologies are not as readily understood or widely used for the broad range of hazardous substances as they are for petroleum. EPA believes that secondary containment continues to be the most effective demonstrated method of release detection for new UST systems containing hazardous substances. Thus, EPA has retained the proposed approach in the final rule but has revised (1) the performance standards for the secondary containment and (2) the procedures for receiving a variance. In the final rule, in applying for variance, owners and operators of new or upgraded UST systems must provide (in addition to the demonstration of the effectiveness of a release detection method) information about applicable corrective action technologies, the inherent health risks, the chemical and physical properties of the stored substance, and any relevant characteristics of the particular UST site that would impact a future clean-up. These factors will be used by the implementing agency to guide its decision on whether to allow the alternate release detection method for the hazardous substance.

(1) Release Detection Requirements (§ 280.42(a) and (b)). Commenters took a variety of positions regarding the necessity of secondary containment for hazardous substance USTs. Many felt that the approach in the proposal was appropriate while others thought that specific chemicals, or all regulated substances, should be treated in a manner similar to petroleum. Many of these arguments centered on the similarities or differences between certain hazardous substances and components of petroleum. Commenters also disagreed about the most effective form of secondary containment, some favoring double-walled tanks, and others advocating excavation liners. Commenters generally were opposed to allowing soils as an excavation liner due to the difficulty of ensuring that the soils were properly treated and compacted.

The final rule has retained the proposed secondary containment requirement for new and upgraded hazardous substance UST systems with some significant revisions. The final secondary containment requirement is based on both technical and implementation considerations. From the technical perspective, secondary containment is believed desirable because it ensures that all hazardous substance USTs will be provided with effective detection methods, and, if a leak occurs from the primary containment structure into the interstitial space, corrective action will be simplified because it is very unlikely to impact the surrounding environment. As discussed in later sections of today's preamble, EPA has extensive information on the performance of various release detection methods and corrective action technologies already being applied to petroleum tanks. (The Agency allowed single-walled tanks and release detection for storage of petroleum substances because of the detectability of these substances and the belief that small releases could be cleaned up relatively easily.) Information about the performance of release detection and corrective action methods for hazardous substances, however, is not as readily available. Most importantly, there is very limited field experience with detection methods for hazardous substance tanks. This is made more significant by the fact that numerous hazardous substances are more toxic than petroleum and are less likely than petroleum to be detected by smell or taste. It is also important to note that, when replacing these hazardous substance tanks, industry has generally chosen to put them aboveground, in vaults, or in double-walled tanks. This lack of information and experience with effective single-walled tank strategies for hazardous substance USTs has caused the Agency to conclude that secondary containment is the most technically prudent approach to protecting human health and the environment.

In today's final rule, the Agency has given important consideration to both technical and implementation concerns. From an implementation standpoint, the secondary containment requirement is considered feasible by EPA because there are significantly fewer hazardous substance systems subject to regulation than there are petroleum tanks. In addition, secondary containment appears to be consistent with existing industry practices and state regulations for storage of these substances. As noted in the preamble to the proposal, state and local programs have adopted a variety of requirements for hazardous substance USTs that tend to emphasize secondary containment. In addition, these regulatory programs are generally not as widespread or well established as petroleum tank programs, which makes adoption of the secondary containment standard less disruptive to ongoing implementation. Although EPA recognizes that some hazardous substances can be both detected and cleaned up as easily as petroleum, there are many chemicals that cannot, and specific criteria for distinguishing them for UST release detection purposes are difficult to establish, especially in a rule to be applied nationwide. Commenters did not provide any workable approaches on new information upon which EPA could develop such criteria. Owners and operators are eligible for a variance if they can demonstrate that effective detection and cleanup technologies exist for the specific hazardous substances being stored (see the next section of the preamble).

The specific requirements for secondary containment of hazardous substance UST systems have been revised based on public comment and new information. Many commenters assumed that the proposal's alternative for secondary containment with interstitial monitoring required full secondary containment that would prevent the release of chemicals to the environment even in the event of a catastrophic tank failure. The proposal, however, was intended only to ensure detection of releases and not necessarily to contain them. For example, it allowed both excavation zone liners and double-walled tanks that did not have 360° coverage of the inner wall. Based on commenters' concerns and the preceding discussion, the final rule requires for new or upgraded UST systems storing hazardous substances that the outer barrier be capable of containing a release until it is detected and cleaned up. The effect of this requirement is to require both double-walled tanks and liners to completely surround the inner tank and be checked for releases as frequently as necessary to prevent the release of hazardous substances to the environment should a leak occur. This monitoring would, at a minimum, need to be conducted at least monthly.

In the final rule, the Agency has taken an approach that is based on the one followed for hazardous waste tanks under Subtitle C of RCRA (40 CFR Parts 264, 265; Subpart J). It is the Agency's belief that many of the hazardous substances covered in today's rule have properties that are very similar to those

of hazardous waste. Consequently, both rules require that a leak at any time during the operational life of the facility will be contained until it is detected and removed from the containment system. Because there are significantly more hazardous substance UST systems than hazardous waste tank systems, and because Subtitle I UST systems are not part of a permitting program, the Agency has retained the performance-oriented approach that was proposed. (It is the same general approach used for petroleum tanks.) This performance-oriented monitoring approach is intended to provide enough flexibility to control the greater number and variety of hazardous substance tanks, without the use of permits, while at the same time providing the same level of protection as provided by the tank requirements under Subtitle C of RCRA.

(2) Variance to Release Detection (§ 280.42(b)). As stated in the proposal preamble, EPA recognizes that secondary barriers with interstitial monitoring may not be necessary for all hazardous substance UST systems because there may be alternate release detection methods that, based on the tank system characteristics, location, and the nature of the substance stored (52 FR 12741), adequately protect human health and the environment. The Agency, therefore, proposed to allow the use of other release detection methods if the owner or operator demonstrated that an alternate method reliably detects the release of the hazardous substance from the UST system and obtains the approval of the implementing agency (see proposed § 280.41(b)).

A number of commenters supported the variance provision, while others opposed allowing a variance in any situation. The Agency has concluded that the risks posed by the use of an alternate method will be minimized by requiring the owner and operator to apply for a variance, and by stipulating that an alternate release detection method can be substituted only if it is as reliable as those used for petroleum and petroleum-based substances, and all performance criteria for the release detection method are satisfied at the site. In addition, information about available corrective action technologies, and the inherent health risks and chemical properties of the substance stored, will also need to be provided by the owner and operator to the implementing agency for review. These other factors may override the detectability criteria. For example, if a given vapor monitoring device detects a hazardous substance with better sensitivity, accuracy, and response time than it detects petroleum, and if all the other criteria for the operation of the method are met at the site, then the owner and operator is eligible to apply for a variance from the secondary barrier requirement. However, the implementing agency will approve the alternate method only after considering the additional information about the characteristics of the substance stored and the availability of corrective action methods for that substance if a release occurs at the site. Thus, although an effective and accurate vapor monitoring method is available, the implementing agency may decide not to approve the variance request if the UST is located near a drinking water well or there is no corrective action technology that can be applied to remove the release before this resource is adversely impacted.

For existing hazardous substance USTs, the Agency allows the use of alternate release detection for up to 10 years, at which time owners and operators must have applied for and received a variance and must have upgraded the existing system to new tank standards. Although the application for a variance can be made any time within the 10-year upgrade period for existing USTs, the owner and operator must meet the appropriate performance standards in §§ 280.43 and 280.44 for an alternate release detection method at all times during the 10-year interim period.

(a) Application Process. In the preamble to the proposal, the Agency requested comments on procedures that could be used by owners and operators to apply for a variance (52 FR 12743). Commenters provided a number of suggestions on how the variance application process could be implemented. These suggestions included a variance application procedure similar to the one promulgated in the final rules for hazardous waste tanks (40 CFR Parts 264 and 265), a "nationwide" variance application procedure for single companies storing similar products in tank systems located in several states, or a joint petitioning procedure for different companies in the same state that have similar characteristics of tanks, substances, and release detection methods.

The Agency evaluated all the suggested application procedures and decided to defer the specific implementation details to the implementing agencies. Numerous factors, such as differences among the traditional procedures already followed by implementing agencies, variability of site conditions, and the number and configuration of tanks at each site, suggest that administrative details for dealing with this variation should be left to the specific agency reviewing the request. The Agency plans to develop information about a number of variance application options that can be used by the implementing agencies in designing a variance process in their jurisdiction. The final rule contains only the baseline requirements that the owner and operator must satisfy in order to use a substitute method of detection at new or upgraded hazardous substances USTs; these requirements are to: (1) Demonstrate the detectability of the substance using the alternative release detection method; (2) provide data about the corrective action technology that will clean up a release within the constraints of the UST site characteristics and the inherent chemical, physical and health-risk properties of the substance; and (3) obtain variance approval before the installation and operation of the alternate release detection method.

(b) Evaluation Criteria. In response to EPA's requests for public comment on the type of information and criteria that could be used by the implementing agencies to grant variances (52 FR 12742), commenters recommended that EPA develop a list of hazardous substances that would qualify for variances on a class basis. They also recommended that EPA develop a list of hazardous substances that are petroleum-like substances as well as identify physical properties for hazardous substances that could be considered for variances. No commenters provided a workable set of criteria for doing this, however. Significant new information was not provided by commenters concerning the characteristics of hazardous substances. The Agency proposed to compile a similar list of the specific petroleum substances but rejected this approach in the final rule. (See section IV.A.4. for a discussion of the definition of "petroleum" and "petroleum UST systems.") After considering the different evaluation criteria in a variance program, the Agency decided that a specific set of national evaluation criteria is not workable given the diversity of the chemical properties of the hazardous substances, the USTs in which they are stored, and the variability of site characteristics. The Agency believes that specific variance program implementation details (for example, the use of "class" variances) are best left to the implementing agencies. The Agency does, however, intend to assist the implementing

agencies in their variance program development by providing alternative procedures for simplifying the application and approval process and by providing more information about the general criteria that must be satisifed at a minimum nationally in each variance application.

(c) Specific Changes to the Rule. The final variance requirements only differ in minor ways from those in the proposed rule. The requirement to notify the implementing agency of the intent to conduct a demonstration for a variance has been removed. Instead, owners and operators will be required "to demonstrate that an alternate method can detect a release" before it is used at a new or upgraded UST system. Thus, prior notification is simply an item of administrative convenience that can be required by implementing agencies at their discretion. The final requirements make clear that it is advantageous for the owner and operator to apply as early as possible, because an alternative method cannot be used to meet the new or upgraded hazardous substance UST system release detection requirements without approval of a variance by the implementing agency.

In the final rule, owners and operators are also required to submit to the implementing agency information about the availability of corrective action technologies that could be used should there be a release of the stored hazardous substance at that site, including a consideration of any unusual health risks that are posed by a release of the stored substance. The Agency believes that this additional type of information is needed by the implementing agency to be able to evaluate variance applications. This change is in response to those commenters who believed that the proposed approach was not stringent enough and could result in adverse impacts to human health and the environment. Also, these new criteria provide the further clarification of evaluation criteria that was suggested as needed by other commenters. EPA believes these general criteria will more adequately (than the proposed approach) ensure that only variances will be applied for that, if approved, will protect human health and the environment.

d. *Methods of Release Detection for Tanks (§ 280.43).* The proposed rule presented in one section the release detection options that addressed the complete UST system (both tanks and piping). It also specified in one section the methods that need to be combined, the frequency of testing, and the applicable performance standards. The final rule has been reorganized in response to several commenters who stated that this format was unclear and that it was confusing in the way it combined tank and piping detection methods and petroleum and hazardous substance requirements. All of the general requirements, such as combinations and testing frequencies, are now contained in § 280.41 for petroleum and § 280.42 for hazardous substances. Any substantive changes in these areas are discussed in previous sections of the preamble (IV.D.2. b. and c.). The final rule in § 280.43 now simply lists the methods that can be used for detecting leaks in tanks and the conditions under which they can be used to meet the requirements of § 280.41 and § 280.42. The methods applicable to underground piping are listed seperately in § 280.44 and are discussed in a later section of this preamble (IV.D.2.e.)

(1) Inventory Control (§ 280.43(a)). The proposed rule allowed the use of monthly inventory control in combination with periodic tank tightness testing as a method of release detection. Although listed as a separate method in the final rule, inventory controls still must be combined with another method of detection (see section IV.D.2.b.1. above). The Agency acknowledged that inventory control is affected by many variables but maintained that the technique is effective when correctly performed by trained personnel. The proposed rule contained weekly and monthly performance standards and procedural requirements to optimize the effectiveness of inventory control.

Commenters generally felt that the performance standards and the procedures were too stringent, and that the method was unreliable because the variables were essentially uncontrollable. EPA's research since proposal demonstrates that the proposed rule would in fact result in an unacceptable rate of false alarms; consequently, the final rule has been revised to eliminate the proposed weekly performance standard and to change the monthly performance standard to 1 percent of monthly product throughput plus 130 gallons. In addition, the proposed requirement that only tanks partially within the ground water perform a monthly test for water within the tank has been expanded to apply to all tanks. Also, the proposed limitation on the accuracy of the dispensing meter has been revised to make it consistent with local weights and measures standards. These changes are discussed in more detail below.

(a) Performance Standard. EPA proposed that inventory control be conducted to detect a release of at least 5 percent of flow-through on a weekly basis and 0.5 percent of flow-through on a monthly basis; the latter standard was based on an API recommended practice. The Agency was concerned that having only a monthly inventory control requirement would lead to large releases occurring for a month before detection. Therefore, the proposal included a weekly loss standard that was intended to provide early warning of major losses.

Several commenters stated that the proposed 5 percent weekly and 0.5 percent monthly flow-through requirements were too stringent and too difficult to achieve, particularly the weekly requirement. They also felt that the weekly requirement would result in many false alarms, thus unnecessarily burdening owners and operators and the implementing agencies. They suggested that detection of such small leaks from tanks with low flow-through of product was difficult, that the temperature influences on volume were too great to obtain accurate data, and that the technology was not sufficiently developed to detect small releases and, at the same time, ensure against false alarms. Other commenters supported the monthly flow-through requirement.

In response to commenters' concerns, the Agency has since proposal evaluated several approaches to inventory control to determine the minimum leak rate that could be reliably detected. The evaluation considered basing inventory leak determinations on the percent of throughput, percent of throughput plus a constant volume, or number of days exceeding a given loss. A data base of actual inventory records consisting of over 20,000 measurements at nearly 600 tanks nationwide was used in a computer simulation of leak rates. The study indicated that the proposed monthly standard would result in a large number of false alarms (approximately 30 percent on a monthly basis). The most sensitive of these inventory control methods would detect a loss of about 1 gallon per hour at a PD of 95 percent and a PFA of 5 percent. This investigation revealed that using sophisticated statistical inventory control or pooling the inventory data for several months would improve the sensitivity of all the methods. Notice of this study was published for comment in the Federal Register (53 FR 10403). A commenter submitted a study that confirmed the high false alarm rate of the monthly

standard and indicated that the weekly requirement also had an unacceptably high false alarm rate (over 50 percent).

In response to these comments and the studies discussed above, EPA has modified the final rule. The Agency acknowledges that other methods can detect smaller releases, but the final rule allows inventory control combined with tank testing for use during the phase-in period or with new, protected tanks because of its general effectiveness, low implementation costs, and ease of application. As discussed above, however, the proposed 5 percent weekly detection rate produces an unacceptably high false alarm rate, as does the proposed 0.5 percent monthly standard. Consequently, the requirement for weekly inventory control has been omitted from the final rule and the monthly requirement has been changed to 1.0 percent of flow-through plus 130 gallons, which has a false alarm rate of about 5 percent. The Agency believes that owners and operators will take inventory results more seriously when the number of false alarms are reduced. EPA has further concluded that inventory control offers a practical and effective means of detecting releases only when combined with tank testing or automatic tank gauging.

In addition to the performance standard, the proposed rule contained six restrictions that had to be followed when conducting inventory control. The restrictions that received the most comment involved measurement accuracy (to ⅛ inch), the accuracy of the dispensing meters, and the requirement to measure water only when some portion of the tank is below ground water. These restrictions are discussed below.

(b) Dipstick Measurement Accuracy. At proposal, the Agency believed that reading dipsticks to the nearest ⅛ inch could be performed and that reading to this level would reduce major errors involved with the measurement of the stored product's height (52 FR 12727). A number of commenters felt that many factors interfere with precise dipstick measurements, and, therefore, it is not reasonable to require accurate measurements for an imprecise method. Commenters also felt that the ⅛ inch requirement was inconsistent with existing conversion tables, which are usually marked in whole inches. Other commenters suggested reasons why dipstick methods of measurement were inappropriate. The EPA-sponsored research discussed in the previous section indicates that increased stick-reading accuracy down to and including ⅛-inch does improve the performance of inventory control. The Agency also has concluded that existing dipsticks marked to 1 inch can be successfully read to the nearest ⅛ inch to improve accuracy, or that conversion tables can be modified.

(c) Dispensing Meter Accuracy. Accurate metering is essential to inventory control. Therefore, based on the National Conference on Weights and Measures Standard, the Agency proposed that dispensing should be metered to within 5 cubic inches for every 5 gallons of product withdrawn, even if it meant that certain owners and operators would have to install or calibrate dispensing meters. Several commenters preferred the requirement to be 6 cubic inches per 5 gallons, in accordance with the National Bureau of Standards (NBS) Handbook #44, or that it be the same as the local weights and measures standards. EPA agrees with commenters that local weights and measures calibration standards will be adequate to ensure accurate inventory reconciliation where these standards are applicable. At dispensing meters that are not covered by local weights and measures standards, the nationally recognized NBS standard is appropriate. The final rule has been revised accordingly to allow both calibration standards.

(d) Monthly Water Check. The proposal required the measurement of any water in the tank at least monthly if any portion of the tank is within the water table. Water in a tank could result from ground-water intrusion, indicating that there is a hole in the tank. One commenter suggested more frequent measurement of water under all situations rather than only in those cases where the tank is partially within the water table. The Agency agrees that water could enter the tank even when the water table is deep (e.g., when rain water temporarily collects in the excavation pit). The presence of water in a tank can indicate a hole in the tank, whether the water comes from ground water or rain water. The provision now requires the water measurement monthly at all tanks conducting inventory control. The monthly frequency was retained because it agrees with the frequency of other release detection methods, which was selected as the frequency that is protective of human health and the environment. The measurement of water in the tank is a simple procedure routinely conducted by many operators already, so this requirement should not significantly increase the operator's burden.

(2) Manual Tank Gauging (§ 280.43(b)). In the supplement to the proposed rule (52 FR 48633), EPA requested comments on the use of static inventory control (or manual tank gauging) as a release detection technique for used oil (or other types of) UST systems. Commenters generally supported the use of this detection method, although they differed widely on what tanks should be allowed to use this method, how long the test should be, and how frequently it should be performed. Research submitted by one commenter, and EPA's own analysis, indicates that this method is as effective as inventory control at smaller tanks (below 2,000 gallons) and can reliably detect leaks of 0.2 gallon per hour for tanks of 550 gallons or smaller. Consequently, final rule allows its use as the sole release detection method for tanks 550 gallons or less in capacity. Also, manual tank gauging can be used in the final rule for tanks of 551 to 2,000 gallons as a substitute for the inventory control part of the method (that combines monthly inventory control with periodic tank tightness testing). Manual tank gauging cannot be used to meet the release detection requirements at tanks larger than 2,000 gallons.

Commenters were divided over the applicability and effectiveness of manual tank gauging. Some commenters recommended that manual tank gauging be approved because it is effective and inexpensive and because used oil poses less environmental risk than other regulated substances. They also noted that the lack of piping and small deliveries at these tanks made releases less likely. Some commenters opposed the use of manual tank gauging because they believed the method is not sensitive enough and includes too much room for human error. These commenters also frequently recommended requiring secondary containment for used oil because it contains hazardous constituents and no other detection methods are as effective.

As discussed earlier in today's preamble (section IV.A.3.g.), the Agency believes that used oil does not differ substantially from petroleum products and should be regulated in the same manner. Consequently, today's final rule requires that these tanks conduct accurate monthly monitoring using the methods applicable to other petroleum tanks. The Agency requested comments in the supplement to the proposed rule on the possibility of including manual tank gauging as a monitoring alternative; specifically, for used oil tanks or other types of tanks. Commenters recommended a wide range of specific

requirements. Suggested frequencies ranged from daily to every 5 years and suggested test lengths ranged from 6 hours to 72 hours or longer. Some commenters recommended this test should apply to other regulated substances, especially products similar to used oil. Commenters disagreed on the appropriate size limit for tanks allowed to use this method.

In order to determine more precisely the performance of this method, EPA analyzed a report submitted by a commenter. EPA's evaluation (Notice of Availability; 53 FR 10403) indicates that for tanks smaller than 550 gallons, manual tank gauging can detect 0.2 gallon per hour leaks with a PD of 0.95 and a PFA of 0.05 when performed in accordance with today's rule. For tanks between 550 gallons and 2,000 gallons the method achieves the performance of inventory control. For those tanks, the method is capable of detecting leaks of 1 gallon per hour or less with a PD of 95 percent and a PFA of 5 percent, even under extreme temperature conditions. Based on commenters' suggestions and these study results, the final rule includes manual tank gauging as an allowed leak detection method. In today's rule, only tanks of 550 gallons or smaller may use this as the sole method of release detection. Larger tanks (551–2,000 gallons) may use it in place of the inventory control part of the release detection method that combines inventory control with periodic tank tightness testing.

According to the Agency's evaluation, the performance described above can be achieved if the following limitations are met: The test period is at least 36 hours, depth measurements are taken twice and averaged, and the depth is read to the nearest one-eighth of an inch. These criteria have been included in today's final rule.

(3) Tank Tightness Testing (§ 280.43(c)). The proposed rule allowed periodic tightness testing in conjunction with monthly inventory control as a release detection method for all tanks. While acknowledging the uncertain performance of tank testing, the Agency believed that it was a demonstrated and effective method that would be available to meet the large demand for release detection following promulgation. To maximize the performance of tank tightness tests, the proposed rule included a performance standard of 0.1 gallon per hour at a PD of 99 percent and a PFA of 1 percent. Commenters disagreed about whether tightness testing should be included in the rule and what level of performance it should be required to meet. Additional evaluation by EPA indicates that, although few methods can now meet the proposed standard, several methods could make a few changes to equipment and protocol and meet the proposed standards. For these reasons, the final rule retains the proposed tank testing standard of 0.1 gallon per hour.

(a) Performance Standard. At proposal, EPA recognized that many factors such as temperature changes, tank end deflection, and vapor pockets affect the accuracy of tank tightness tests (52 FR 12724–12725). To limit the allowable methods to those that most effectively compensate for these problems, the Agency included a performance standard in the proposed rule. The level of this standard was selected based on the results of the national survey of underground motor fuel storage tanks and the experience of tightness testing practitioners: little evidence was available to support the NFPA 329 criterion of 0.05 gallon per hour. The proposed standard of 0.1 gallon per hour at a PD of 99 percent and a PFA of 1 percent was believed to be the maximum performance achievable on the typical sizes of tanks in use. A high PD was included to adequately protect human health and the environment, and a low PFA was included to prevent a heavy burden on owners and operators and the implementing agencies that is caused by investigating a large number of false alarms.

In the proposal preamble, EPA acknowledged that there was insufficient information on the performance of available tank tightness tests, particularly their ability to meet the NFPA 329 standard of 0.05 gallons per hour with the proposed probabilities of detection and false alarm. It was further stated that the Agency was beginning an investigation to acquire this data (52 FR 12724–12725). Since that time, EPA's research laboratory at Edison, New Jersey, has evaluated 25 tank tightness testing methods representing a wide range of approaches. During each evaluation, blind tests were conducted by company operators, the data were evaluated by EPA, and computer models were used to simulate leak rates and probabilities and compare them to the operational data. The results of these evaluations indicate that, while most of these currently available methods of tank tightness testing are capable of detecting leaks of 0.1 gallon per hour, only a few could presently detect this leak rate at the specified probabilities. Even with the oftentimes simple equipment and procedural changes that are necessary to achieve the needed level of improved performance, some methods probably would not be able to meet the proposed PD and PFA. Notice of the results of this study was published in the Federal Register on March 31, 1988 (53 FR 10103).

Some commenters felt that tightness testing is too unreliable to be an allowable release detection method, at least without further evaluation. Several commenters stated that the proposed standard was too stringent to be met with existing technology, particularly for larger tanks. Others recommended a more stringent standard for the release rate, usually citing the NFPA 329 criterion of 0.05 gallon per hour as the way to spur development of the technology. One commenter suggested that the performance standard should become more stringent over time as the methods develop. The proposed standard was supported by some commenters.

Based on the Agency's evaluation of tank tightness test methods and the concerns raised by these commenters, the final performance standard has been revised. Many of the methods evaluated by EPA at its Edison, New Jersey laboratory were able to detect a release of 0.1 gallon per hour so this value was retained in the final rule. The detection probabilities associated with the standard have been moved to the general requirements section (and are discussed earlier in this preamble in section IV.D.2.a.). During the two years before these probabilities are effective, the Agency believes additional standards are needed. Thus, the final rule language has been changed to include the requirement that tank test methods must account for the effects of thermal expansion or contraction of the product, vapor pockets, tank deformation, evaporation or condensation, and the location of the water table. These variables have been identified as important in EPA research (Notice of Availability; 53 FR 10403) and in the NFPA 329 recommended practice.

The Agency's evaluation indicates that many tightness test methods can meet the final performance standard with relatively minor procedural or equipment changes. Such changes, however, have not been developed and instituted by the manufacturers of many of the different devices, tried in the field, or evaluated in laboratory conditions. In addition, manufacturers have not described their performance in terms of probability of detection and probability of false alarm in the past. There will be a large demand for tightness testing for release detection and confirmation

following promulgation of the final rule. Tightness testing is the most widely available release detection method and the method that is likely to be used by many UST owners and operators over the next 5 to 10 years. EPA was concerned that, if few or none of the tightness test methods could meet the performance standard, there would be insufficient industry capacity to meet demand for release detection. For these reasons, the final rule has been revised to delay the effective date of the probabilities of detection and false alarm (see discussion of this delay in section IV.D.2.a.5. above).

The Agency decided to give manufacturers 2 years in which to develop and put into operation the necessary procedural and equipment changes or to develop new methods that meet the entire performance standard. Such a delay was recommended by some commenters and will ensure that necessary equipment and procedural changes can be made by method manufacturers. As discussed previously in the preamble, the Agency believes significant environmental benefit can be obtained by conducting release detection quickly. The delay in performance standards should allow more wide spread and rapid testing of tanks.

(b) Relationship of the Final Performance Standard to NFPA 329. As noted above, some commenters felt that the proposed performance standard of 0.1 gallon per hour at a PD of 99 percent and a PFA of 1 percent was too lenient and was a relaxation of the standard currently followed by the industry, which is 0.05 gallon per hour recommended in NFPA 329. However, the Agency has concluded that the final performance standard is not less stringent than NFPA 329. First, the standard in the final rule still requires testers to declare a leak at a threshold value of 0.05 gallon per hour (see section IV.D.2.a.4. above). Second, the NFPA guideline specifies a detectable leak rate but does not specify the probability with which this leak rate must be detected. Most existing volumetric methods will detect 0.05 gallon per hour leaks at least a portion of the time. A relatively poor method that detects a leak of 0.1 gallon per hour with a PD of 50 percent and a PFA of 1 percent could still claim to meet the NFPA criterion because the probability of detecting a leak is not specified. Direct comparison to the Agency's performance standard shows that the NFPA 329 criterion would allow more leaks to go undetected and also cause more false alarms. EPA's final performance standard intended to eliminate the use of poor tightness test methods, ensure that more leaks are detected, and cause fewer false alarms. Thus, it provides for better protection of human health and the environment while ensuring unnecessary or counterproductive burdens on owners, operators, and implementing agencies are minimized.

(c) Large Tanks. In the preamble to the proposed rule, EPA stated its doubts that the performance standard was attainable for large tanks (52 FR 12725). Some commenters agreed and some disagreed. Research at EPA's Edison facility suggests that the 0.1 gallon per hour standard cannot be met for large tanks using current test methods. Rather than allowing less stringent test methods for large tanks, which would create the potential for ignoring large releases, EPA believes that owners and operators of large tanks will have to select other release detection methods besides tank tightness testing unless improved or new methods are developed that allow the standard to be met for the larger tanks. (See section IV.A.3. of this preamble on bulk underground storage tanks.)

(4) Automatic Tank Gauging Systems (§ 280.43(d)). Automatic tank gauging systems (ATGS) were included in the proposed rule as one of the options for release detection (although the name of this option as proposed was "automatic monitoring of product level and inventory control"). These monitors generally have two modes of operation: Leak detection mode (product level monitoring) and inventory control mode. The proposed rule required that the leak detection mode be used at a minimum once a month and meet a performance standard of 0.2 gallon per hour with a PD of 99 percent and a PFA of 1 percent and that the automatic inventory control be conducted to meet the performance requirements for manual inventory control. Some commenters stated their belief that ATGS are unreliable, unproven, and too costly. Other commenters felt that the proposed performance standards were too stringent. Many commenters favored the use of ATGS but suggested changes to the requirements in the proposed rule. As discussed below, the Agency has retained ATGS in § 280.43(d) of the final rule. The proposed leak rate standard has been retained but the probabilities have been revised and their effective date delayed 2 years. The proposed requirement that the tank be 80 percent full at the time of the test has been deleted. These changes and comments are discussed in more detail below.

(a) Performance Standard. At proposal, the Agency recognized there were limited performance data on ATGS, and that there was still significant opportunity for human error. However, ATGS were a relatively commonly used release detection method with the potential to be very sensitive in detecting leaks, and EPA wanted to include as many effective release detection options as possible in the rule to provide flexibility (52 FR 12736–12737). To limit the allowable ATGS to those that effectively control the possible sources of error, the proposed rule included a performance standard of 0.2 gallon per hour with a PD of 99 percent and a PFA of 1 percent. The 0.2 gallon per hour value was based on the equipment manufacturers' claims. This performance standard was intended to challenge manufacturers to prove that their systems could meet the standard.

Some commenters felt that ATGS were unproven and unreliable as a release detection method primarily because of their sophisticated electronic components. Other commenters felt that the PD was too stringent, while others agreed with this part of the proposed performance standard. A commenter provided a study conducted over several months at an operating service station equipped with several ATGS. One of the devices already clearly achieved the proposed performance standard. This study confirmed the Agency's conclusion that ATGS can be effective in field situations; thus, this release detection method has been retained in the final rule.

EPA's own research and the results of the field evaluation of ATGS demonstrate that 0.2 gallon per hour leaks can be reliably detected by several of the difficult types of available devices, and the proposed leak rate of 0.2 gallon per hour has been retained in the final rule, but the PD has been changed to 95 percent and the PFA to 5 percent. In addition, the final rule schedules the PD and the PFA standards to take effect 2 years after the effective date of today's rules (see discussion of this delay in section IV.D.2.a.5. above). Any owner or operator installing an ATGS in the intervening 2 years will not have to replace it after 2 years, unless it does not meet the performance standard. EPA's review of the systems now available indicates that they should be able to meet the standards with only minor adjustments.

Some commenters felt that the Agency should set a detectable leak rate for ATGS of 0.1 gallon per hour rather than the 0.2 gallon per hour requirement in

the proposed rule. EPA, however, does not agree because current equipment as presently used cannot meet such a standard, and the suggested approach would effectively eliminate ATGS as a release detection method. Furthermore, since the product level test is conducted monthly, the performance of this method can statistically equal or exceed the sensitivity achieved by periodic tank testing, even though the monthly performance standard is less stringent. The Agency intends to keep as many effective methods available to the owners and operators so that they will have flexibility in selecting a release detection method that best suits their needs.

(b) 80-Percent-Full Requirement. The proposed rule required that the tank be 80 percent full during the monthly test. This requirement was intended to ensure that a large portion of the tank's surface was checked for releases (52 FR 12737).

Many commenters opposed this requirement because it would be difficult for tanks with low monthly flow-through to implement, and it would also be an impediment to businesses with UST systems that are in use continuously. New information now indicates that this limit on conducting the test is unwarranted. Information from experienced UST field personnel, a study in Suffolk County, NY, and comments received by EPA demonstrate that most corrosion holes occur in the sides and bottom of tanks, not the top, so there is little need to always test the top of the tank for releases.

In the absence of a specific requirement, release detection tests conducted every 30 days are expected to include tests over the range of levels to which the tank is typically filled, so those areas of the tank routinely in contact with product will be tested. The inventory control requirement will also ensure that releases from the top of the tank are detected if they occur. Also, many owners and operators do not keep their tanks 80 percent full during normal operation; if tanks are rarely filled above a certain point, testing above that point is simply unnecessary. Also, the overfill prevention requirements in § 280.20 and § 280.30 of today's rule will prevent product from reaching the very top of the tank. Therefore, the Agency has deleted this requirement from today's final rule.

Although testing at 80 percent of capacity is no longer required, the testing procedure should be conducted when the tank is near its highest level and the testing should be conducted after waiting a sufficient time after the delivery of the product. This waiting period is necessary because, after product is added to the tank, it takes time for the product to mix and achieve the nearly static condition necessary to conduct meaningful product level monitoring (52 FR 12725). EPA anticipates that this waiting period will become a part of the manufacturer's recommended procedures as they attempt to meet today's standard concerning detection probabilities.

(c) Combination with Inventory Control. In combination with ATGS, the proposed rule required inventory control that meets the same performance standards required for manual inventory control. Inventory control was required in addition to product level monitoring because it was believed that product level monitoring was not as accurate as tank tightness testing or external methods and, therefore, a backup release detection method was needed. This requirement is not burdensome because ATGS routinely collect the information needed to conduct inventory control. No comments were received on this issue. Therefore, inventory control is still required in conjunction with ATGS in the final rule. Some of the performance standards for inventory control have been revised in today's final rule and are discussed in section IV.D.2.d.1. above.

(d) Effectiveness with Piping. A commenter was concerned about the effectiveness of ATGS in detecting releases from piping. EPA agrees that, in the leak detect mode, this method will not detect piping leaks, and the inventory mode will detect piping leaks but not with sufficient sensitivity to detect small leaks. The causes-of-release information collected by EPA since the proposal (see section II.F. of this preamble) indicates that piping is a major source of releases. Therefore, the final rule has added several requirements for piping (see section IV.D.2.b.2. of this preamble). The owners and operators of UST systems using ATGS as a release detection method for the tank will have to select an additional means of release detection for the piping, such as line tightness testing.

(5) Vapor Monitoring (§ 280.43(e)). The proposed rule allowed the use of vapor monitoring in the excavation zone as a method of release detection as long as certain conditions and limitations were met that maximize performance. The information available to the Agency at the time of proposal indicated that vapor monitoring was, under optimum conditions, a sensitive and reliable release detection method. Research conducted by the Agency since the proposal, as well as information submitted by commenters, has confirmed that vapor monitoring is capable of detecting extremely small leaks (0.003 gallon per hour) under certain conditions. Some of the proposed conditions concerning the use of this method, however, now appear unnecessary. In summary, the final rule includes vapor monitoring, omits the 500-ppm background restriction, and allows monitoring for selective components of the stored regulated substance, including tracers mixed in the substance.

(a) Effectiveness of Method. Some commenters expressed concern that vapor monitoring was not developed enough to be relied upon as a sole method of release detection. The Agency solicited comments and additional data on the effectiveness of vapor monitoring in the proposal preamble (52 FR 12728). EPA included it as a method of release detection in the proposal because existing data indicated that it should be an extremely sensitive monitoring tool and it has already been used successfully in some state and local UST programs. The Agency has received no research results or data from commenters that would cause it to alter its earlier conclusions. In fact, several commenters submitted detailed field and experimental data verifying the effectiveness of vapor monitoring. A theoretical computer modeling study done by EPA confirms these results (Notice of Availability; 53 FR 10403). Although there are still not enough data to specify a more complete performance standard for this method (in terms of probability of detection, false alarm, and leak rate), the Agency believes this method will provide effective release detection, and has retained it as an option in the final rule, as long as it meets the limitations discussed below.

In response to concerns raised by some commenters, the Agency wishes to note that in the final rule, a vapor monitoring well does not necessarily mean a typical ground-water well. Instead, a vapor monitoring well means any sampling point from which vapors are collected and brought to the monitor by any means.

(b) Background Concentration. In the proposed rule, EPA limited the use of vapor monitoring to those areas with less than 500-ppm background concentration of total organic hydrocarbons in the soil gas of the excavation zone. Many commenters felt that the 500-ppm restriction was too stringent, stating that natural background concentrations of methane, for example, are higher than 500-ppm in

some areas of the country. Other commenters wanted a restriction based on site-by-site evaluations. The 500-ppm background level was originally set as an attempt to recognize that background effects can interfere with effective vapor monitoring (52 FR 12729–12731). Commenters described research and field experience, however, that indicate vapor monitoring should work well at several thousand ppm levels in the soil gas if a volatile substance (such as gasoline) is being stored in the tank. In addition, EPA research has shown that at many sites having no recorded release from the UST system, the total background concentration exceeds the 500-ppm level. This type of background level is probably due to an accumulation of spills and overfills.

To avoid precluding the use of vapor monitoring at many sites where it is potentially applicable, no specific numerical restrictions on background levels is included in today's final rule. Instead, there is now a more general performance requirement that the background concentration must not interfere with the ability of the method used to detect releases. For example, at a site with too high a background level (e.g., over 10,000 ppm for gasoline), leaks may not produce a detectable concentration increase over background. Determining if the background levels are too high depends on the resolution of the sensor, the volatility of the product being monitored, and other site conditions.

(c) Measurable Component. Several commenters expressed concern that the proposal did not allow monitoring for specific components of the stored substance and, instead, appeared to be focusing only on total organic hydrocarbons as the detection criterion. EPA's research indicates that monitoring for specific components or tracer compounds may be very advantageous under certain site conditions because it eliminates some of the difficulties with background interference levels and false alarms. For example, sensors that detect only the lightest components of gasoline (e.g., butanes and pentanes) may suffer fewer problems with high background levels because these constituents vaporize so rapidly that the potentially confounding effects of past spills at the site are minimized.

Monitoring for these components might also allow spills to be more easily distinguished from equipment leaks, because the level of the light chemical components would return to background levels more quickly if it was suddenly elevated due to an episodic event like a spill. Similarly, if a carefully selected tracer compound that is not already present at the site is placed in the tank, background interference problems can be eliminated. Some of the advantages of tracer methods were also discussed in the proposal preamble (52 FR 12730).

For the above reasons, EPA believes that effective vapor monitoring systems can be designed to monitor for specific components, tracer compounds, or total organic hydrocarbons. Consequently, the Agency explicitly allows these additional methods in § 280.43(e) of the final rule.

(d) Sensitivity of the Vapor Monitor. The proposed rule stated that the threshold of the vapor monitor must be preset specifically for the type of regulated substance stored in the UST. This requirement was included in an attempt to increase the sensitivity of the monitor to detect releases in areas with background hydrocarbon levels. Since proposal, however, changes have been made to the vapor monitoring requirements based on public comment and new EPA analysis that make this requirement unnecessary or even undesirable. Tracer compounds may now be used for vapor monitoring, so specificity of the monitor to the regulated substance is undesirable. The EPA-sponsored computer modeling that was conducted on vapor monitoring performance indicated that, in some circumstances, a monitor would be more effective if it monitored for a single component of the stored substance than the complete stored substance because it would be able to differentiate more distinctly between a leak of that component and existing background hydrocarbon levels. Again, specificity of the monitor to the complete regulated substance would be undesirable. The final rule now simply requires that the monitor be capable of detecting a significant increase above background of the regulated substance, a component or components of the substance, or a tracer compound. This change will allow the use of existing sensitive monitors such as those measuring BTX (benzene, toluene, xylene) or "total hydrocarbons" because they can detect components of many regulated substances.

(6) Ground-Water Monitoring (§ 280.43(f)). The proposed rule allowed the use of monitoring for free product on top of the ground-water table to determine the presence of a release from an UST system. Many commenters agreed with this approach to release detection but wanted EPA to ease some of the limitations placed on the use of the method. The final rule still allows monitoring on top of the water table for free product but with several changes: Well placement is no longer limited to the excavation zone; the well screen must be designed to prevent clogging and intercept the water table at both high and low ground-water conditions; and the well must be sealed from the ground to the top of the filter pack.

(a) Effectiveness. In the proposal the Agency recognized that there are several concerns about the use of ground-water monitoring, primarily the fact that the resource being protected (i.e., ground water) is the medium in which the release is detected. The Agency included this release detection method in the proposed rule, however, because this method has been demonstrated to successfully detect small petroleum releases and it is currently in widespread use in several state UST programs, such as that in Florida. EPA proposed limiting ground-water monitoring only to floating free product because its presence can be detected more quickly and reliably following a release than can dissolved product. The proposed rule also contained several limitations on well design, well placement, and equipment performance that together were intended to limit the use of this method to those conditions under which rapid detection could be ensured.

Most commenters supported ground-water monitoring as a release detection method in common use that has successfully detected leaks. One commenter expressed reservations about the method, saying that released product can migrate away from monitoring wells around an UST system and claimed some problems with Florida's program. EPA continues to acknowledge that the method is not completely risk-free and also believes that it provides a level of protection equivalent to the other allowed release detection methods. In addition, not allowing ground-water monitoring in the rule would force states like Florida that depend primarily on ground-water monitoring to completely revamp their programs, thus disrupting established and effective programs, delaying implementation, and unnecessarily increasing expenditures because of the replacement of all the existing wells with other equipment. Therefore, in consideration of the limitations discussed below, EPA has retained ground-water monitoring as an option in the final rule.

(b) Limitations. The limits on well placement in the proposal restricted this method to areas with the water table 20 feet or less below the surface and with soils having a hydraulic conductivity of at least 0.01 cm/sec. Also, the wells had

to be placed within the excavation zone. These restrictions were intended to ensure rapid detection by minimizing the distance that a release must move between the UST and the monitoring point and minimizing the time taken to move that distance. Ground-water monitoring was also limited to use with products that are immiscible in water and lighter than water so the product can be detected by the monitors.

• *Depth to Ground Water.*

Many commenters believed that the proposed 20-foot maximum depth-to-ground-water restriction was too stringent and requested that this maximum value be increased or even deleted entirely from the final rule. Others agreed with the proposed rule. The Agency still believes, however, that increasing the allowable maximum depth would increase the volume of the release that could occur before detection. Detection of releases is also slower and less certain with deeper wells because subsurface geology can inadvertantly direct product away from the monitoring wells, even if they are located close to the UST system. EPA research conducted since the proposal suggests that 20 feet is the maximum depth to ground water that will permit detection in 30 days when the hydraulic conductivity is 0.01 cm/sec (Notice of Availability; 53 FR 10403). Also, once a release is detected by a deeper well, corrective action will be more difficult and costly because more product has been released. Therefore, EPA has retained in the final rule the 20-foot depth-to-ground-water restriction when ground-water monitoring is used as the sole release detection method. If this method is used as a supplemental device to another approved form of leak detection or as a release investigation method, EPA encourages the use of these wells at greater depths or in less permeable soils.

• *Placement of Monitoring Wells.*

Commenters also objected to the proposed requirement that the monitoring wells intercept the excavation zone. One commenter noted that this requirement could result in existing tanks being punctured during drilling of the well. Another commenter said such a requirement violates some existing state laws intended to prevent contamination. The Agency shares this concern as one expressed by numerous regulators in the field. Apparently, not all owners and operators of existing USTs know the orientation and dimensions of their UST system, not all well drillers have the equipment to find the exact location of their UST, and errors in well installation can occur even when the placement of the UST is known.

Although a slight increase in the allowable distance between the UST and the well may result in slightly larger releases before detection, EPA decided that this was preferable to the catastrophic release that would occur if a tank were punctured. Today's final rule has been revised to require that the monitoring wells or devices be placed within the excavation zone or as close to the excavation zone as is technically feasible. This change also applies to new tanks although placing the wells in the excavation zone should rarely be technically infeasible.

The soil hydraulic conductivity limitation is retained in the final rule and will have to be met whether the well is placed outside or inside the excavation zone. Thus, the revision on well placement is not a major change because wells are allowed outside the excavation zone only when the well is in close proximity to the UST system, the soil is very porous, and released product can move quickly to the well. If the soil outside the excavation zone cannot meet the conductivity requirement, the well must be placed inside the zone.

• *Immiscible in Water.*

The proposed rule required that the regulated substance be immiscible in water and have a specific gravity less than one in order to use ground-water monitoring. These requirements were needed to ensure that released product would float on top of the water table, where it could be detected by the monitors. The Agency has retained these requirements in the final rule but notes that ground-water monitoring is intended for use with gasoline and other substances that are, in fact, slightly soluble in water. Thus, the immiscibility requirement does not exclude substances which are in fact slightly soluble. The slight solubility will not interfere with rapid detection because most of the product is still floating on top of the water table where the monitor can sense it. For example, gasoline has been successfully detected by ground-water monitoring in state programs such as Florida's.

(c) Design Specifications. In the proposed rule, EPA did not include any design specifications for the monitoring wells and networks because site conditions vary widely throughout the U.S., and the Agency wanted to allow the implementing agencies and owners and operators as much flexibility as possible in designing the wells and monitoring network to fit the site. Commenters suggested that the rule should contain more specific requirements and restrictions. EPA continues to believe that tailoring the wells and the network to the specific conditions will result in better release detection, so few specific requirements can (or should) be included at the national level. In addition, most states, such as Florida, that are relying on ground-water monitoring as the preferred release detection method have already included detailed design specifications in their UST programs.

However, upon further review of the proposed limitations and capabilities on ground-water monitoring and the experience using this method in Florida, and other areas, the Agency did decide that three well-design criteria should be added to the final rule to prevent common problems. First, if the top of the water table is above or below the screened interval of the well, then the free product floating on top of the water table will not be able to enter the well and be detected by the monitor. For this reason, today's final rule requires that the monitoring well screen must allow entry of regulated substance into the well under both high and low ground-water conditions. Second, the final rule requires that screening be designed to prevent migration of soil or filter pack into the well, which would clog the screen and prevent product from entering and being detected. The third criterion added to the final rule is the requirement that the wells be sealed from the surface to the top of the filter pack, which will prevent possible contamination by hydrocarbons washed from the surface by rain water that might cause a false alarm or mask a future release.

(d) Sensitivity of Monitor. The last limitation included in the proposed rule to ensure rapid detection using ground-water monitoring was a performance standard requiring that the monitoring equipment be capable of detecting the presence of at least one-eighth of an inch of free product on top of the ground water. This value was selected because it is the maximum performance that manufacturers continue to claim can be achieved by existing automated monitoring equipment. This requirement was intended to apply both to automated and manual monitoring techniques. Some commenters wanted to make the standard more stringent by reducing the criterion of one-eighth of an inch of free product in the well to one-sixteenth of an inch or by replacing it with nonquantitative terms such as detection by "sheen" or by human sight or smell. The commenters felt that the Agency did not give enough justification

for selecting the ⅛-inch value and that it is essentially defining the volume of an acceptable release.

The Agency reiterates that the ⅛-inch requirement was selected as the performance standard because it is the sensitivity of existing automated equipment, not because it is an acceptable release. A preliminary EPA analysis indicates that several commercial devices can detect ⅛ inch of product on top of a water table (Notice of Availability; 53 FR 10403). To set a performance standard that is more stringent than can be met by existing technology would eliminate use of this method, which has proven effective in several local UST programs. The Agency considered allowing only manual methods of collecting and analyzing ground-water samples, which may be more sensitive than automated monitors; however, manual methods are very subjective and can only be conducted intermittently, whereas automated methods can be continuous and are less subjective. Therefore, today's final rule retains the ⅛-inch performance standard, and both manual and automated monitoring are acceptable.

(7) Interstitial Monitoring (§ 280.43(g)). Interception barriers and interstitial monitoring were two methods of release detection allowed in the proposed rule. Because they are two distinct methods used to detect releases, they were treated separately. These methods and the requirements that were proposed for them were discussed in detail in the preamble to the proposed rule (52 FR 12735–12739). Commenters were in favor of allowing these methods but suggested changes to some of the requirements. In response to comments on several technical issues raised in the proposal concerning both methods, EPA has changed some of the technical requirements. Based on these comments, the final rule has consolidated the requirements for both methods into one section, eliminated the use of soil/clay liners, and added a requirement to prevent interference with effective cathodic protection.

Section 280.41 of the proposed rule allowed monitoring between an UST and two types of impermeable barriers as two separate release detection methods. The first method, proposed in § 280.41(f), allowed monitoring for liquids in the unsaturated zone between an UST and an interception barrier immediately below it. Interception barriers are basically partial excavation zone liners: they are located immediately below the UST and come only part of the way up the sides of the excavation pit. The second method, proposed in § 280.41(h), allowed interstitial monitoring between an UST and a secondary barrier that surrounds the entire UST system. These barriers are not the partial, catch basin-type of barriers allowed under the first method. These barriers are either integral to the tank system design itself (e.g., double-walled tanks or pipes) or they are located within the UST excavation area along the bottom and sides of the pit and present a barrier between all parts of the UST system and the environment (e.g., flexible membrane pit liners).

Using either of the above barrier-type methods, the interstitial space between the tanks and the barrier can be monitored by a variety of devices designed to detect a variety of changes in operating conditions (e.g., pressure changes with double-walled tanks or presence of liquid or gaseous product in the interstitial space between the barrier and the UST system). Because improper design can make these systems ineffective, the proposed rule included a number of design criteria to ensure effectiveness as a release detection method.

(a) Consolidation of Sections. The proposed rule included a set of general performance standards and design limitations for each method to ensure effective detection of released product. The requirements for the two methods were essentially the same. Despite their similarity, they were included separately in the proposed rule to make it clear that they are two distinct proposed methods and that both are acceptable means of detecting releases. These two methods were not intended to prevent releases, but were intended to contain releases long enough to direct the regulated substance to a monitor for detection; EPA intended that release prevention be covered in the UST design and installation sections of the rule (52 FR 12735–12739).

Today's final rule has been reorganized so that the performance requirements for both of these methods are discussed in a single section (§ 280.43(g)). The Agency has decided to eliminate the separate and duplicative sections in the proposed rule on interception barriers and interstitial monitoring because this appeared to be a source of confusion to some commenters. This is only an organizational change, not a deletion of a possible release detection method, and does not change the substantive intent of the proposal. The consolidated design and performance limitations for both methods remain as proposed with the exception of the changes noted below.

(b) Performance Standard. The proposed rule required that the interstitial monitor between an UST and a secondary barrier be capable of detecting any release from the UST into the interstitial area. One commenter objected to this wording because it requires that the interstitial monitor would be capable of detecting *any* release, no matter how small. The Agency disagrees with the commenter and believes that interstitial monitors should be capable of detecting a release into the interstitial area. The available data on monitor performance indicates that they are very sensitive and will, in fact, be able to detect the type and size of release that is likely to occur from a secondarily contained UST system. Ideally, EPA agrees with the commenter that a performance standard should be included in the rule to define the sensitivity of interstitial monitors. The data are insufficient, however, to determine a performance standard. Secondary containment with interstitial monitoring is a very sensitive release detection method and is believed to provide maximum protection of human health and the environment, and the Agency did not want to eliminate it from the rule for lack of a specific performance standard. Therefore, the final rule continues to require that interstitial monitors be capable of detecting a leak from any portion of the tank that routinely contains product.

(c) Soil/Clay Liners. The Agency solicited comments on the performance of barriers for purposes of UST release detection (52 FR 12736, 12739). The subject the Agency received the most comment on was the question of the use of soil/clay liners. Some commenters approved of the use of soil/clay liners but suggested that these liners needed more stringent limitations. Other commenters recommended that these liners not be allowed in the final rule because they are not impermeable to all gasoline constituents. Recently completed studies by EPA's Office of Solid Waste on the effectiveness of soil/clay liners compared to synthetic liners (Notice of Availability, 53 FR 10403), as well as information submitted by commenters on the proposal, have caused the Agency to delete this proposed technical option from today's final rule. This means that barriers constructed from native soils or artificially treated soils (for example, bentonite-sealed soils) are excluded from use under the revised performance requirements for barriers. In general, soil/clay barriers are not being allowed because there is enough evidence about the inadequate performance of these

materials as reliable barriers to question their reliability for release detection purposes.

(d) Interference with Cathodic Protection. Several other commenters noted that barriers that completely line the excavation might interfere with the cathodic protection system. For example, flexible membrane barriers are usually non-conductive and could electrically isolate the anodes from the tank system, preventing the flow of protective current. The Agency agrees that this could be a problem although no failures of this type have been reported. A general requirement has, therefore, been added to the rule, stipulating that barriers must not interfere with cathodic protection (§ 280.43(g)). EPA believes this can be met in most cases simply by ensuring that the components of the protection system are placed inside the barrier system.

(e) Compatibility of Liner with Product. The proposed rule contained a requirement that the secondary barrier be compatible with the regulated substance to prevent the product from eroding the integrity of the liner over time, causing holes and possible releases to the environment (52 FR 12735, 12736, 12739). The Agency agrees with commenters who noted that a small amount of liner deterioration is inevitable. Accordingly, the wording of the proposed compatibility performance requirement in § 280.43(g) has been changed to indicate that some deterioration is permissible as long as it does not prevent the detection of a release. This requirement was revised to ensure that a basic level of compatibility is achieved and to make the owners and operators responsible for ensuring barrier materials (e.g., flexible membrane liners) are compatible with the product stored (see also § 280.32).

(8) Other Methods of Release Detection (§ 280.43(h)). As discussed in the preamble to the proposal (52 FR 12739–12740), EPA has identified over 250 commercially available release detection devices. The Agency continues to believe that methods of detection other than the seven general methods listed in the rule may also be able to successfully detect releases under certain circumstances. Thus, the proposed rule allowed the use of other methods of release detection if they were approved by the implementing agency as no less stringent than one of the other methods listed in the rule. Commenters generally preferred that any mechanism for approval of a new method be at the federal level (discussed in more detail below). The final rule, however, retains the approval mechanism as proposed but provides an additional mechanism for allowance of other methods. A new method may be used if it can detect a release of 0.2 gallon per hour or 150 gallons within a month with a PD of 95 percent and a PFA of 5 percent. The Agency felt that adding the second alternative mechanism, one which is self-implementing, will provide consistency among methods, offer additional flexibility for owners and operators to choose new or improved technologies of equivalent protection to those specifically allowed in the rule, and spur innovation.

(a) Other Methods Approved by Implementing Agencies. The specific methods EPA proposed have demonstrated effectiveness in the field and are already in extensive use. An important purpose for including these methods was to make it clear that their use was allowed for meeting the proposed release detection requirements and under what conditions they could be used. The Agency intends to continue to develop and provide information helpful to the implementing agencies in evaluating new methods. EPA will also continue to foster identification and development of new methods. Although the Agency wants to allow new methods, it was also concerned that, to protect human health and the environment, they be limited to the methods that are at least as stringent as the methods proposed. Therefore, the proposed rule included a mechanism to allow the use of a new release detection method if the owner or operator could demonstrate to the implementing agency that the method could detect releases before they migrated beyond the excavation zone as effectively as one of the methods already in the rule.

Generally, commenters agreed with the need for allowing new methods but most felt it should be a federal approval process conducted by EPA, not by the implementing agency as proposed. The commenters were opposed to delegating approval authority to the implementing agencies because the lengthy and repeated (for each state or local agency) approvals would discourage method development and because state and local officials do not have the knowledge to make these evaluations. All of the commenters felt that the approval mechanism would be more efficient at the federal level, where approval could be granted one time, rather than 50 times, by means of an approved list or a revised regulation.

As stated in the proposal, the Agency wants to foster innovation and development of new release detection methods and to allow them to be implemented quickly (52 FR 12739). Therefore, the Agency is concerned that the development and publication of a federal list of approved methods or a revised regulation, as suggested by some commenters, would take too long. The Agency could decide, at some future time, to revise the final regulation to add new general methods. The Agency is convinced, however, that allowing approval by the implementing agency, including those at the state and local level, will enable a new method to be used more quickly because the implementing agencies would not have to wait for a Federal approval before a method could be implemented. In addition, the precedent set when a new method passes an evaluation in one implementing agency should facilitate succeeding reviews by other agencies.

Implementing agencies are developing UST programs quickly, and the Agency's primary concern is to meet their needs as rapidly as possible. The Agency's research on release detection methods will provide important information to state and local agencies for use in their decisions on which release detection methods to allow. The Agency will continue to encourage private sector evaluation of new release detection methods and the exchange of this information with the implementing agencies. In addition, as discussed below, the Agency is providing another, self-implementing alternative for use of methods not explicitly included in the rule.

In addition to the reasons given above, a Federal approval listing process or a revised regulation would not ease some of the problems that commenters foresee with delegating approval to the implementing agencies. EPA's inclusion of methods in the final rule, or its subsequent endorsement of a new method, does not automatically make the method acceptable in a state because states or local governments may, under their own authority, impose release detection requirements more stringent than EPA's. Each state can review each method and decide whether or not to allow it. In fact, a number of state and local agencies are already implementing their own UST programs, and some of these programs have more restricted lists of approved methods than the federal rule. Thus, the final rule retains the proposed option of approval of other methods by implementing agencies.

The standard for implementing agency approval has been changed in the final rule to make it consistent with other changes in the rule. The revised ground-

water monitoring standard no longer requires that the monitoring wells pass through the excavation zone. As discussed in section IV.D.2.d.6. above, the Agency did not believe that this requirement was necessary to protect human health and the environment. The revised method can no longer detect a release before it migrates beyond the excavation zone, making the standard for implementing agency approval meaningless. To retain the consistency between this section and the method requirements, the standard for comparing new and existing methods in the final rule has been revised. The standard now specifies that methods approved by the implementing agency must be as effective as one of the other methods allowed in the rule. Methods are considered to be equivalently protective if they can detect a small release as quickly and reliably as other methods included in the rule. This change is consistent with changes in § 280.42(b)(5)(i) (see section IV.D.2.c.2. of the preamble).

(b) Other Methods That Meet a Performance Standard. The Agency included in the final rule a second mechanism by which a new release detection method can become approved. A new method may be used to meet the release detection requirements if it can be demonstrated to detect a leak rate of 0.2 gallon per hour or 150 gallons within a month with a PD of 95 percent and a PFA of 5 percent. This performance standard for alternative release detection methods contains two equivalent leak rates, and the owner or operator may demonstrate compliance with either format. Although external monitoring methods are capable of detecting very small releases, it is more difficult to demonstrate that they meet a small hourly release rate than a larger, though equivalent, volume. The Agency was concerned that, if only the 0.2 gallon per hour release rate was included in this performance standard, manufacturers of new and effective external monitoring equipment or experimental methods would be discouraged from developing the methods or would be unable to demonstrate compliance to the satisfaction of the implementing agency. As discussed previously, EPA wishes to encourage development of new release detection methods.

Unlike the performance standards for the specific allowable release detection methods, the PD and PFA values for the performance standard for new alternative methods are effective immediately. As discussed above in section IV.D.2.a.5., compliance with the probabilities applicable to all methods is delayed for two years. This delay was included in the final rule to allow manufacturers time to modify existing methods, which are already in wide use, and develop the required documentation of performance while still providing the immediate release detection needs required in the rule. These allowable methods were identified in the rule because they are widely used and expected to work well, often without significant improvements. New alternative methods, however, should be developed from the beginning to meet the most stringent performance requirements. In addition, the Agency was concerned that only requiring a leak detection capability of 0.2 gallon per hour could be interpreted to allow imprecise methods such as inventory control to be used alone for the first 2 years of the program. Methods such as ATGS can already operate almost to the required probabilities of detection and false alarm, whereas inventory control cannot come close to these levels, and to allow its use alone even for 2 years would be harmful to human health and the environment.

The evidence gathered by EPA from laboratory evaluations and field experience indicates that the methods specifically proposed (except inventory control) should be able to meet this performance standard now or in the near future (see discussions above for each method). As new methods use this mechanism to become approved, this will ensure consistency of performance among new methods. The net effect of including this alternative in the final rule is to move closer to the general performance standard for all methods considered desirable by many commenters (see discussion in section IV.D.2.a.4. above).

The addition of this alternative will have the effect desired by commenters and EPA of spurring innovation and development of new technology for release detection because there is now a specific and measurable goal for manufacturers to work towards. In particular, this approach will provide flexibility to develop new release detection methods for unusual UST systems such as bulk tanks, for which current methods are inappropriate or expensive. This approval mechanism will have the additional advantage of allowing a new method proven to meet the standard to be used without any approvals in states which allow this approval mechanism.

This approach also clarifies what minimum equivalent performance must be demonstrated to the implementing agency under the other approval procedure for new methods (see preceding section). EPA did not, however, want to make this performance standard the only means by which a new method could become approved because it may not be possible to easily determine a leak rate for some methods within the next few years, particularly external ones. Such methods can still be very effective at detecting releases and the Agency wants to encourage the development of sensitive methods. If method developers can demonstrate to the implementing agencies the sensitivity of their methods in ways other than leak rates, then they should be able to do so. For these reasons, the performance standard approach to approving new methods is included in the final rule in addition to, not in place of, the proposed mechanism requiring review by the implementing agency.

e. *Methods of Release Detection for Piping (§ 280.44).* The general release detection requirements for pressure and suction lines are discussed in section IV.D.2.b.2. of this preamble. This section discusses the performance standards for those required release detection methods.

One commenter noted that piping and tank release detection methods should be separated because not all tank methods apply to piping and vice versa. A separate section addressing piping release detection methods has been added to the final rule to address these concerns. Separating the methods for tanks and piping allows owners and operators greater flexibility in designing a system. For example, at a station with extensive piping, installing flow restrictors and conducting an annual tightness test for the piping and using vapor monitoring for the tanks may better protect the environment and cost less than installing vapor monitoring for both the tanks and piping.

The proposed rule required either continuous monitoring devices or automatic shutoff devices on all pressurized lines as well as a line tightness test in conjunction with scheduled tank tightness tests. The proposed rule established a leak rate for the automatic shutoff device and indirectly required line tests to meet the tank test standard (0.1 gallon per hour with a PD of 99 percent and a PFA of 1 percent) but set no other performance standards. The Agency requested comment regarding the field performance of pressurized piping release detection methods (52 FR 12744). Commenters noted that additional performance parameters should be

provided in the rule, such as detection limits and line operating characteristics. The Agency agrees and has accordingly added further specifications to the piping release detection methods allowed in the final rule to ensure that they meet these minimum performance standards. Thus, probabilities of detection and false alarm have been added for the automatic line leak detectors and line tightness tests; and (for reasons explained earlier) the effective date of these probabilities is delayed for 2 years. Because leak rates depend on the pressure in the line, the Agency agreed with commenters suggesting that the minimum performance standards for line leak detectors, which operate by detecting changes in line pressure, should be specified in terms of the line operating pressure. Each of the piping release detection methods is discussed below.

(1) Automatic Line Leak Detector (§ 280.44(a)). The proposed rule required that the automatic shutoff device be capable of detecting and shutting off a release of at least 2 gallons per hour. This value was selected based on manufacturers' claims. Most commenters felt that the performance standard suggested in the supplemental notice (52 FR 48638) of 0.1 gallon per hour with a PD of 99 percent and a PFA of 1 percent was too stringent, and that 2 gallons per hour was below the detection level of flow restrictors.

The performance standard in the final rule for automatic piping release detection methods (including flow restrictors, shutoff devices, and interstitial or external monitors) has been set at 3 gallons per hour at 10 psi with a PD of 95 percent and a PFA of 5 percent. The 3 gallons per hour value and the probabilities were selected based on a study conducted by EPA's Office of Research and Development of the behavior of pressurized lines, an evaluation performed and submitted by a commenter, and manufacturers' written claims. The value of 10 psi was also selected because it is the pressure at which a typical line leak detector operates. A manufacturer can test a device at any convenient operating pressure and mathematically convert the results to 10 psi to determine if the device meets the performance standard. As discussed elsewhere in today's preamble (section IV.D.2.a.5.), the effective date of the PD and PFA is delayed for 2 years following promulgation.

The final rule also requires that an automatic line leak detector be capable of checking for releases hourly and either restrict or shut off flow of product or be equipped with an audible or visual alarm. The Agency intends the term automatic line leak detector to include a wide variety of devices that meet the standard including automatic shutoff devices, automatic flow restrictors, continuous interstitial monitors, continuous vapor monitors, or continuous ground-water monitors. The hourly detection frequency was selected because pressurized lines can release large volumes of product quickly, so very frequent monitoring is necessary during operation to protect human health and the environment. The equipment currently on the market either operates continuously or conducts a test each time the pump is turned on to dispense product, provided several minutes have elapsed since the previous dispensing, so meeting this requirement should not be difficult. The Agency believes the operators must be alerted immediately to the presence of leaks in pressurized lines. To do this, a clear indication such as flow restriction or shutoff or an alarm is considered necessary.

The final rule also contains the requirement that all automatic line leak detectors be checked annually according to manufacturer's requirements. This requirement was added in response to commenters' concern that line leak detectors can malfunction or be overridden by unwise operators. The possible burden of an annual maintenance check is outweighed by the importance of detecting and stopping pressurized releases.

(2) Line Tightness Test (§ 280.44(b)). The line tightness test that is required in the final rule annually for pressurized piping and every 3 years for American-style suction systems is part of the tightness test option that was proposed for the entire UST system. Work conducted at EPA's test laboratory in Edison, NJ, has demonstrated that line tightness test methods should be able to meet a performance standard of 0.1 gallon per hour with a PD of 95 percent and a PFA of 5 percent with, perhaps, some minor modifications in procedure and equipment (see section IV.D.2.b.2.). Therefore, this performance standard has been adopted in the final rule. As discussed above and in section IV.D.2.a.5., application of the performance standard for line tightness testing has been delayed for 2 years.

As discussed above, the performance standards for line release detection must be stated in terms of the line operating pressure. The value of 1.5 times the operating pressure was selected for the line tightness test because most operators are currently performing tightness tests at this pressure, it is the procedure recommended by NFPA 329 for hydrostatic testing, and it covers the range of line operating pressures, including suction lines. It should be noted that, for safety reasons, all line tightness tests should be performed at positive pressure, not a vacuum, even for suction lines. For example, most suction lines operate at 3 to 5 psi negative pressure; therefore, tightness tests should be conducted at about 7 psi positive pressure.

(3) Applicable Tank Methods (§ 280.44(c)). In the proposed rule, six categories of tank release detection were allowed to meet the monitoring requirement for the "UST system," which included the associated underground piping. As discussed in section IV.D.1.a. above, the final rule now separates the release detection methods for tanks and piping because not all tank release detection methods can be used for piping and vice versa. As noted by commenters, some of the tank monitoring methods are in fact applicable to piping, such as vapor monitoring, groundwater monitoring, and interstitial monitoring, and the Agency wanted to include their use as an option for piping release detection. Therefore, the final rule allows monthly monitoring with one of the applicable tank monitoring methods if it is capable of detecting a release from the portion of the underground piping routinely containing product and meets the restrictions applicable to the use of those methods. This is one of the options for the monthly release detection requirement, in addition to the automatic line leak detector requirement.

f. *Recordkeeping (§ 280.45).* The proposed rule required that all UST system owners and operators maintain records on the release detection systems required in the rule. The requirement to keep records of performance claims, test results, and equipment maintenance was included because of the importance of each of these activities in the successful detection of releases and in demonstrating compliance to the implementing agency. Commenters generally felt that the requirements were too burdensome and would be particularly difficult to achieve if the testing was done by a service company. The main areas of concern were the requirement to keep performance claims and the components of an adequate performance claim.

Today's final rule retains the recordkeeping requirements as proposed with two revisions. First, only release

detection equipment permanently located on-site must have written documentation of calibration, maintenance, and repair on file. Second, manufacturers' schedules of calibration and maintenance for release detection equipment must be retained for 5 years from the date of installation.

The Agency required in the proposed rule that all UST system owners and operators maintain three types of records demonstrating compliance with the applicable release detection requirements: documentation of method performance monitoring results; and general operation, maintenance, and repair. It was felt that these records demonstrate that certain past events important to effective release detection using that method actually took place and could be used by implementing agencies to determine compliance (52 FR 12747). In general, commenters felt that the proposed recordkeeping requirements as a whole were too burdensome. The Agency believes, however, that the requirements are not particularly burdensome because many of the records will be supplied by manufacturers, sales personnel, or service people; not much paperwork is involved and the required records would generally be kept on file anyway; and paperwork will be added infrequently. In general, some records are needed to remind the owners and operators when maintenance is scheduled and to help them keep the equipment under warranty. Finally, properly maintained records are necessary to allow later analysis of the tank systems by either the owners and operators or the implementing agency in the event of a release investigation or system closure. Each of the individual requirements receiving comment or revised in the final rule is discussed below.

The requirement to maintain manufacturers' performance claims and justifications for 5 years was intended to encourage manufacturers to evaluate their equipment and develop documentation of the proof of performance and to cause owners and operators to review this information while selecting an appropriate release detection method. Many commenters expressed confusion over what these performance claims would be and were concerned that the owners and operators were being required to substantiate the claims. It was not the intent of the proposed or final rule to require the owners and operators to provide the proof of performance claims, only for them to ask for and acquire information from the manufacturer. In order to compete and successfully market equipment, the manufacturer will have to develop convincing documentation demonstrating that the release detection method meets the minimum performance requirements.

As discussed in the proposal preamble (52 FR 12719), there are several types of information that the manufacturer should include in this documentation and that the owners and operators should look for. The final rule does not require any specific information, however. EPA recognizes that the level of detail will vary by type of method and that, over time, manufacturers will develop standardized claims that will help guide the owners and operators. This requirement will place owners and operators in the position of having to review the claims and select a system that will meet regulatory requirements. Thus, owners and operators are responsible for achieving the goal of effective release detection and demonstrating to the implementing agency that the owners and operators have made an effort to comply with the regulation. For these reasons, this section of the final rule will remain unchanged from the proposal.

The proposed rule required that all records of calibration, maintenance, and repair be maintained by all owners and operators for at least one year. These are important procedures for the proper functioning of release detection equipment, particularly automated systems, and must be available for inspection to demonstrate that the system is working as well as it can. One commenter noted that the recordkeeping requirements would be difficult to meet for owners and operators who hire release detection services to do the monitoring. EPA agrees with this, and today's final rule states that this requirement applies only to owners and operators of equipment permanently located on-site. Owners and operators who hire release detection services need not retain the servicing records of their contractors. Owners and operators, however, must ensure that the service is performed well and according to specifications and will be responsible for the cleanup of any undetected releases.

Another addition to today's final rule that was not in the proposed rule is the requirement that any schedule of required calibration and maintenance provided by the release detection equipment manufacturer must be retained for 5 years from the date of installation. This information should be provided by most manufacturers in the same brochures as performance claims; thus, this new requirement should not result in much additional paperwork. This requirement was added as a clarification to the final rule to remind owners and operators of the importance of maintaining these data. With this requirement, implementing agencies can verify that required maintenance and calibration were performed. Also, if ownership of a site is transferred, the new owner or operator will be able to understand and ensure that the proper schedule is maintained.

g. *Other Release Detection Issues.—(1) Release Detection Variances for Low-Risk Sites.* In the Supplemental Notice (52 FR 48641), EPA noted that protected tanks in some areas of the country may not require frequent-to-continuous release detection. EPA requested comments on whether, within these less sensitive areas, variances should be allowed for protected tanks to conduct internal inspections or less frequent monitoring. EPA requested comment on the appropriateness of these alternative release detection approaches and under what conditions they might be used. There was little agreement among commenters on either issue, and no specific recommendations on how low-risk areas could be defined or identified at the federal level. The final rule does not include a release detection variance for low-risk areas because of the difficulty in operationally defining and implementing a variance procedure which adequately protects human health and the environment.

Commenters who supported the use of the variance felt that it would improve environmental protection by focusing resources on UST systems in higher risk areas. Commenters opposed to the variance noted that leaks can pose environmental problems even in low-risk areas. Their experience suggested that impermeable formations may actually have hidden fractures that allow product to reach deep ground water and necessitating expensive cleanup efforts. They further suggested that, under any circumstance, product leaks may pose an explosion hazard. These commenters also noted the difficulty of managing a variance process.

The Agency agrees with commenters who noted significant problems with a variance procedure. No commenters were able to suggest a manageable variance procedure given the size of the UST universe. As noted earlier in the preamble, defining sensitive or low-risk areas at the Federal level is problematic (see section III. of today's preamble). Because the Agency could not develop reasonable criteria for granting

variances on a case-by-case or prospective basis, no release detection variance is included in the final rule. Consequently, less protective detection options such as infrequent monitoring for protected tanks over 10 years of age will not be permitted in any areas regardless of risk.

(2) Internal Inspection as an Alternative to Release Detection. The Agency also considered the use of internal inspections as a substitute for release detection. EPA solicited comment in the December 23, 1987, supplement to the proposal on the use of internal inspections at low risk UST sites. The Agency received many comments both for and against this option. In general, supporters of internal inspections believe that this would provide important information on the internal and external corrosion and the structural integrity of tanks. Some commenters specifically recommended allowing internal inspection as a release detection alternative at low-risk sites (e.g., sites that are not in vulnerable ground-water supply areas or in close proximity to surface waters and residential areas) while others supported its use at all UST sites. Schedules for conducting internal inspections, such as at periodic intervals (e.g., every 3 to 5 years; or ever 10 to 15 years) or based on tank age, were recommended by several commenters.

Reasons given by commenters not supporting this option included: (1) Not all tanks are constructed with manways, (2) internal inspections are time consuming and would be cost effective only for larger (bulk) tanks, (3) internal inspections do not provide sufficient information on tank integrity, and (4) inspections are a safety risk to the inspector.

The Agency does not have sufficient data on the performance of tanks subject to internal inspection programs that would allow it to determine that such an approach without release detection would be protective of human health and the environment. The Agency is aware that internal inspections are widely used by owners and operators of bulk tanks for evaluating tank integrity. Based on insufficient information on the use of internal inspections with all USTs and the lack of industry consensus codes, however, the Agency has decided not to include this as a release detection alternative in the final rule.

E. Release Reporting, Investigation and Confirmation

1. Overview

Because UST systems are hidden from direct observation, suspected releases must be investigated to identify, or confirm, that an UST system is the source of a release. Monitoring results and other indicators in the environment are the only suggestions of a release. In general, corrective action cannot be started until the UST system and UST site are investigated and a release is confirmed.

The proposed rule required that all suspected releases be reported to the implementing agency (see proposed § 280.50). Suspected releases included: positive monitoring results from testing, monitoring and sampling, unusual operating conditions, and the discovery of regulated substances in the environment. All suspected releases had to be immediately investigated, unless the owner and operator elected to proceed directly to corrective action.

As discussed in the preamble to the proposed rule (52 FR 12747–12751), the development and implementation of criteria and procedures to determine the appropriate circumstances to initiate, conduct and conclude the confirmation process can be technically complex. This situation is further affected by the fact that owners and operators are typically reluctant to begin what they consider to be the costly process of confirmation. Although this testing is inexpensive relative to corrective action costs, owners and operators typically want to avoid all unnecessary costs. The Agency's proposed release reporting and confirmation requirements were established in the belief that nearly all suspected releases must be investigated before conducting even more elaborate and costly abatement procedures. The first step was to quickly establish if the UST system is actually leaking. Prompt reporting of suspected releases also was proposed so that responsible authorities could take action to ensure that investigations are timely, properly designed and performed, and protective of human health and the environment.

The Agency proposed several alternative procedures for investigating suspected releases including: Different combinations of tank and line tightness testing, inventory reconciliation review, testing of secondary containment, checking equipment operation, soil coring and analysis, and other methods specified by an implementing agency. Numerous comments were received in response to the proposed requirements. Most commenters took issue with the proposal's attempt to provide specific direction and guidance and suggested that even more details were needed to successfully implement this approach. For example, several commenters questioned how soil sampling results were to be interpreted and when the soil coring analysis and investigations could be accepted as definitive. In addition, commenters pointed out that the actual steps in confirmation are determined on a site-by-site basis. Other commenters were concerned with the discretion provided the implementing agencies in directing owners and operators in the investigation of off-site impacts.

As discussed elsewhere in today's preamble, EPA has received very encouraging information about the general efficacy of tank tightness testing. Also, it has become clear from comments and information received that tank tightness testing is the most prevalent technique now in use to determine if a suspect system is in fact leaking. Thus, tightness testing is a key confirmatory step in the final rule required of all owners and operators, unless they choose to immediately conduct an initial site investigation instead.

The fact that the overwhelming majority of release investigations are presently conducted using either a tightness test (as suggested by several commenters) or a small-scale site investigation has influenced the final rule as presented today. Accordingly, the five proposed investigation alternatives have been replaced with the requirement to use these two prevalent methods. Alternative methods that are no less stringent and are approved by the implementing agency are still allowed. Today's rule has been revised to more clearly establish the end point for investigation and confirmation procedures. These procedures end when a successful tightness test is obtained or when the data from environmental testing do not significantly exceed background levels. (However, these investigations may resume if additional evidence to the contrary is presented or is discovered.)

2. Section-by-Section Analysis

a. Reporting Requirements (§ 280.50). The proposal (§ 280.50) required owners and operators to report to the implementing agency within 24 hours any monitoring results from any release detection methods specified in Subpart D that indicated that a release may have occurred. Also, the observation of any unusual operating conditions at the UST system that could be indicative of a release, as well as any indication of the presence of released substances in the environment surrounding the UST, had to be reported. The proposed requirement for the implementing agency to be informed early in the confirmation process was believed necessary so that the implementing

agency would be assured that proper investigation procedures were used. Commenters generally responded that it is not necessary to report all suspected releases. They identified situations in which obvious false alarms would have to be reported, and conditions that would be disruptive to the operation of the facility. They pointed out that the large number of what would prove to be unnecessary reports could overwhelm the implementing agency.

The Agency acknowledges that some of the situations brought to its attention could indeed result in a significant number of false (or unnecessary) reports. For example, the erratic behavior of dispensing equipment may warrant further investigation before reporting because this behavior can be caused by more than just a leak in the line. Accordingly, the final regulation has been revised to allow owners or operators to verify the proper operation of their equipment before reporting a suspected release. If the faulty equipment is immediately repaired or replaced and further inspection fails to confirm the initial result, the incident does not need to be reported. In the case of inventory control, the rule now allows a second month of data to be collected to verify the possibility of a release before reporting. This does not mean that all inventory discrepancies must be confirmed by a second month's data. Under some conditions, it may be necessary for owners and operators to immediately report an inventory discrepancy. What level constitutes a suspected loss depends on the size of the tank, monthly throughput, and other operating practices. The appropriate action level must be worked out in advance of using this method.

Other situations such as the physical presence of the regulated substance or unusual concentrations of vapor still require immediate reporting. (The requirement for reporting soil concentrations of 100 parts per million or more has been removed because specific national action levels cannot be established for each affected medium; a more reportable condition is whether new contamination was found based on a change from earlier conditions at this site, rather than arbitrary numerical standards and levels.) Failure to determine that an operational problem is caused by faulty equipment will also require reporting. In addition, as in the proposal, the Agency requires the owners and operators to report off-site conditions that might indicate a release has occurred and that are brought to their attention by a third party. This is intended to expedite the process of quick identification of release incidents by giving the general public additional avenues to report their observations.

b. Investigations Due to Off-Site Impacts (280.51). Under the proposed rule, the owner and operator had to investigate suspected releases that were indicated by off-site impacts and as required by the implementing agency. The unintended interpretation of this requirement was that the implementing agency could direct the owner and operator to conduct off-site investigations in response to the discovery of off-site impacts. Commenters strongly objected to this proposed requirement because they felt that it was improper to conduct investigations on property not under their control and because of the apparent wide discretion given the implementing agency in deciding what confirmation steps are needed in an off-site investigation.

The final rule includes revised language that restates the requirement so it is clear that owners and operators must investigate their own UST system and site when requested by the implementing agency and based on the discovery of off-site impacts. The potential for environmental damage is too great to allow the source of a release to go unidentified and unchecked. Limiting the investigation to the on-site UST system should minimize problems suggested by commenters associated with the investigation of releases on property owned by other parties. The Agency did not intend that owners and operators, under these regulations, must conduct investigations on property belonging to others. In the final rule, the investigation has been limited to the determination of whether the owner and operator's UST system is the source of the off-site impact. If regulated substances have been released from an owner and operator's system, as determined by an on-site investigation and confirmation, then they will be responsible for any necessary corrective action, whether on- or off-site.

c. Release Investigation Procedures (§ 280.52 (a) and (b)). As discussed in the proposal preamble (52 FR 12748–12751), the Agency considered three approaches to release confirmation: detailed, step-by-step procedures; confirmation directed completely by the implementing agency; and a basic, but not detailed, set of requirements. The first approach was rejected because it is not feasible to identify and address all possible types of releases and site conditions in the regulation. The second approach was rejected because implementation of release investigation would be delayed until implementing agencies had the time and resources to determine the appropriate methods for each individual site and because owners and operators would generally delay action until their responsibilities were determined by the implementing agency. Thus, the Agency selected the third approach as providing sufficient guidance as well as flexibility.

To implement this approach, the proposed rule provided five specific procedures for release investigation. Any one procedure could be used depending on the preference of the owner and operator and the way in which a suspected release was identified. These procedures were: (1) Performing a site investigation under the direction of the implementing agency; (2) checking the interstitial area of a secondary containment system; (3) in the case of a failed tightness test, checking inventory records, retesting of each portion of the system, and analyzing soil samples; (4) in the case of an inventory discrepancy, performing tightness tests and analyzing soil samples; and (5) performing any other investigation procedure that is no less stringent than those above if approved by the implementing agency. This selection of release investigation procedures was intended to address all possible situations and allow investigation to begin quickly even in the absence of guidance from the implementing agency (although such an interaction was considered most desirable).

Most commenters disagreed with the proposed approach, particularly the degree of authority given to the implementing agencies. Some of these commenters requested more specific guidance on investigation procedures, particularly what to do given certain findings and when to end an investigation. The specific investigation technique receiving the most comment was the soil coring requirement. Commenters felt it was an expensive and difficult process, the results of which are not definitive in confirming a release as there are many sources of soil hydrocarbons other than a current release. The proposed rule was also unclear about what actions should be taken based on the results of soil sampling. This requirement was proposed to be combined with the tightness test because it was believed that tightness tests might not be determinative and could not detect very small releases. This requirement was deleted in the final rule because it is now apparent (see discussion below) that tightness testing is a reasonably

sensitive and reliable method. Soil sampling and analysis may still be part of the site investigations process as discussed in section (3). below.

(1) Timing of Release Investigation and Confirmation. The Agency required in the proposal that all suspected releases be investigated within seven days of initial reporting. Commenters were equally divided on whether this period was too long or too short. The Agency recognizes that there are some situations, such as the presence of product in the environment, where an immediate response to a suspected release is required. In other cases, such as when relatively small inventory discrepancies appear, greater time intervals may be allowed. The rule has been changed to recognize this: a second month of data collection is allowed for inventory control confirmation; seven days are allowed for testing of the tightness of tanks and lines; and 24 hours are allowed for checking the operation of monitoring and dispensing equipment.

(2) Tightness Test (280.52(a)). Since proposal, the results of three studies have influenced the Agency's thinking on effective release investigation procedures. The evaluation of 25 tightness test methods at the EPA Office of Research and Development's laboratory at Edison, New Jersey (53 FR 10403) indicates that current equipment, operated with some procedural modifications, should be able to detect leaks as small as 0.10 gal/hr (see section IV.D. of this preamble for further discussion of tightness testing and these results). In California, a state with a large UST population and an active UST program (and in numerous other state and local programs), tightness testing is often the preferred approach to release investigation. The new information on the causes of release from UST systems (discussed earlier in this preamble) demonstrates that the most common sources of releases are pressurized piping and loose fittings and bungs on top of the tank, which only leak during tank overfill. The easiest way to detect releases from piping is a line tightness test, and the overfill-type of tank tightness test will identify bad fittings on top of the tank. For all of these reasons, the Agency has concluded that tightness testing is a much more effective method of release investigation than was known at proposal, is often the most logical test with which to investigate a suspected release, and is currently the most practiced confirmation tool nationwide.

Based on the above conclusion that tightness testing is the most effective first step in release confirmation, the Agency revised the final rule to ensure that the appropriateness of this method is highlighted. Consequently, the sections of the proposed rule presenting the several alternative investigation procedures have been deleted from the final rule. (In doing this, EPA agrees with several commenters that some of these procedures were incomplete and unnecessary on a site-specific basis.) In their place are two alternative investigation steps, the first of which is to conduct tightness tests to determine the integrity of the tank and piping. If the test results indicate there is a leak from a portion of the UST system that routinely contains product, the owner and operator must stop the leak and begin corrective action (releases from other portions of the UST system are addressed in reporting and cleanup of spills and overfills in § 280.53). If the tightness test indicates that the UST system is not leaking and there is not evidence of environmental contamination, the final rule does not require further actions of the owner and operator. However, if evidence of environmental contamination is still present and unexplained, the second alternative investigation step must take place. The second step requires conducting an initial site investigation (see section (3) below).

This revised approach is intended to provide clearer guidance and definitive end points as was requested by several commenters. In addition, tightness testing is a familiar technique for many owners and operators and is the most readily available and inexpensive investigation procedure. Therefore, by emphasizing its use as the primary release investigation procedure, many owners and operators will more likely begin investigation quickly on their own without waiting for the implementing agency to direct them. This capability of quick response, plus the sensitivity of tightness testing and its ability to pinpoint all sources of a leak, will minimize the potential damage to human health and the environment from a suspected release. Moreover, tightness testing is frequently the first step in corrective action to determine what must be done to stop a release. Thus, making it a part of release investigation will be cost effective for owners, operators, and implementing agencies.

(3) Site Check (§ 280.52(b)). The proposed rule (§ 280.51(a)(1)) allowed owners or operators to investigate suspected releases by conducting an initial site investigation of the UST site under the direction of the implementing agency. The final rule retains this option as the second step in the release confirmation process. The site assessment requirements in the original proposal, however, have been significantly modified to provide owners and operators greater flexibility in consideration of different site conditions. The requirements have also been modified to be more consistent with the assessment activities required under the closure and corrective action provisions of the final rule.

The initial site assessment allowed under the proposed release confirmation provisions was intended to be similar to the investigation performed under the closure and corrective action provisions. The objective of each of these assessments is to measure for the presence of released regulated substances and provide a preliminary indication of the need for and scope of further corrective action activities. They are not intended to define the full extent or location of soils contaminated by a release.

Despite this similarity in purpose, however, the proposed rule specified different sampling methods and assessment techniques. As a result, a number of commenters expressed confusion concerning the nature and scope of the assessment and requested more specific guidance on investigative procedures. Therefore, to clarify the rule's objectives and ensure that the results obtained from each type of assessment are comparable, similar site check requirements have been incorporated into the release confirmation, closure, and corrective action subparts of the final rule.

The site investigation allowed under the proposed rule had to be conducted under the direction of the implementing agency. As noted above, a number of comments criticized the degree of authority given to the implementing agency under these provisions. EPA agrees that the proposal did not give owners and operators adequate guidance for determining the objectives and goals of the site investigation. This could have resulted in wide variations in the nature and scope of the site assessments conducted under the proposal and in inconsistencies in the resulting data and their interpretation. The proposal also could have inadvertently required the implementing agencies to commit significant resources to the management of site assessments given the large number of assessments, projected to be conducted over the next 5 to 10 years. Therefore, the final rule allows the owner and operator to plan, select methods, and conduct the initial site check. These changes, however, do

not diminish or restrict in any way the authority of the implementing agency to participate in the planning and performance of site investigation activities of the owner and operator. These changes will allow the implementing agency to determine the scope of their involvement in the site investigation program and, at the same time, avoid unnecessary and potentially costly delays in the implementation of each assessment by the owner and operator.

The final rule does not require the owner and operator to use a particular type of measurement method or assessment technique. A number of commenters questioned the applicability and effectiveness of the investigative procedures discussed in the proposed rule, and suggested other methods that may be equally effective in various site-specific situations. EPA agrees that a given sampling method or measurement technique may not provide representative results for all types of regulated substances and site conditions. For example, soil gas sampling may not be appropriate where the regulated substance contains compounds that are non-volatile or where the local geology and hydrology significantly restrict the movement of the volatilized organic species.

To address this problem, the final rule requires the owner and operator to measure for the presence of regulated substances in the area where contamination is most likely to be present. Any factors that may affect the identification of the source or presence of contamination must be considered in order to ensure that the assessment will provide accurate and reliable results. The rule specifies the factors deemed to be the most important in selecting the measurement method and in conducting the initial site check.

Measurements must be taken in the area surrounding the UST system where contamination is most likely to be present. Samples may be collected from any depth as long as they are taken where contamination is most likely to have migrated or accumulated given the specific characteristics of the site and the regulated substance. Most regulated substances will tend to migrate down and, as a result, the Agency believes that samples taken at depths below the UST system's suspect components will generally satisfy the requirements of this subsection. The contaminants in some regulated substances, however, may float on the water table or dissolve in the ground water. Consequently, the nature of the regulated substance and the depth to ground water around the UST system are important factors to be considered when developing an assessment plan.

The owner and operator may also find it necessary to conduct the initial check in an area that extends outside of the excavation zone of the UST system. Although the Agency believes that sampling in the excavation zone will generally provide the most accurate information about the presence and source of contamination at an UST site, it may not be possible to identify the precise location of the excavation zone or gain reasonable access to the areas adjacent to the tank and piping due to interfering structures. In addition, samples taken from the excavation zone will not give any information concerning the extent of contamination. Where contamination poses an imminent threat to human health and the environment on adjacent property, it may be more appropriate to take samples at or near the site's property line that is ajacent to the off-site point of impact. For example, seepage of liquid or vapors into occupied residences or into drinking water supplies may necessitate sampling at the adjoining property line so that corrective action activities can be expedited. In such cases, the mitigation of contamination in the soil or ground water around the building or well may be more important than first identifying the cause of the contamination, particularly where there are several possible sources of suspected releases.

The specific factors identified in the final rule were selected to ensure that representative assessment information is obtained during release confirmation. Consideration of these factors by the owner or operator is deemed by EPA to be the minimum requirements for adequately evaluating the area surrounding the tank. They are not intended to be exhaustive nor should they be given equal weight at all sites. The importance of each of the factors must be evaluated carefully in view of the regulated substances suspected of being present and the specific conditions at the site.

d. *Reporting and Cleanup of Spills and Overfills (§ 280.53).* In the proposal, the Agency specified that spills and overfills which resulted in the release of a regulated substance meeting or exceeding the reportable quantity (RQ) under CERCLA (40 CFR Part 302), or spills and overfills of petroleum exceeding 25 gallons or causing a sheen on surface water, must be reported to the implementing agency within 24 hours. The proposed approach has been maintained in the final rule.

In the preamble to the proposed regulation, the Agency requested comments on the appropriateness of the reporting cutoff of 25 gallons for aboveground releases of petroleum to land and surface water. Commenters were divided on this issue. Many supported the 25-gallon cutoff while some requested that it be raised to much higher levels and a few requested that it be lowered. The Agency has retained the proposed reporting levels while allowing individual state and local implementing agencies the ability to select other amounts under certain conditions. In all cases, the spill or overfill must be immediately contained and cleaned up, and, if it is not, then it must be reported to the implementing agency. The point at which a report must be submitted to the implementing agency is an administrative convenience, and the Agency intends to leave some discretion to the states on this area.

The Agency believes that spills often occur at many of the facilities in this regulated community. In fact, knowledgeable members of the regulated community have reported to EPA that spills and overfills are the second most common source of release to the environment. This conclusion is based in part on observations made during tank removal of obviously contaminated soil around areas of the tank where spills might be expected to occur. This soil contamination can be caused by emptying fill hoses onto the ground after delivery, either by accident when the hose is disconnected from the tank or on purpose when the tank is inadvertently overfilled and the hose cannot be drained into the tank. Although any one incident may or may not result in a significant threat at a particular site, the Agency has concluded that the repeated occurrence of these releases over time does represent a serious threat to human health and the environment.

The concern about spills reporting is that spills appear to occur very frequently, although generally in small quantities. The requirement to report all spills, regardless of their size, could cause the implementing agency to be overwhelmed with reports of numerous small spills that do not represent a significant threat to human health and the environment. The Agency believes very little threat is posed by smaller spills if they are contained and immediately cleaned up, including contaminated surface soils. The installation of catchment basins required in Subpart B in the final rule should reduce the number of releases to

the environment, the cost of cleanup for owners and operators and the number of incidents where reporting is necessary.

The Agency has retained the proposed RQ approach to indicate to the owner and operator when reporting is necessary. For petroleum, this approach requires reporting of aboveground releases to land in excess of 25 gallons, and of aboveground releases to water if the result is an oil sheen on the water, in accordance with the requirements of 40 CFR Part 110. The rationale for this was provided in the preamble to the proposal. The Agency also recognizes that, in some cases, it may not be possible to immediately clean up a spill of less than 25 gallons. When this occurs, the owner and operator is required to report the spill to the implementing agency.

A spill or overfill resulting in the release of a hazardous substance to the environment must be reported if the volume equals or exceeds its RQ as defined under CERCLA (40 CFR Part 302). The RQ for a particular hazardous substance may result in a volume that is less than 25 gallons. The Agency feels it is necessary to place tighter controls on hazardous substances because of their generally greater threat to human health and the environment. An additional discussion of this issue is provided in section VI.A. of this preamble. The release of a hazardous substance equal to or in excess of its RQ must also be reported to the National Response Center immediately (rather than within 24 hours) under sections 102 and 103 of CERCLA and to appropriate state and local emergency response authorities under Title III of SARA. The requirements of today's rule do not change the responsibilities of owners and operators to meet the requirements of these other EPA rules. Thus, in the case of a spill or overfill of a regulated hazardous substance from an UST, the owner and operator is subject to two reporting requirements. The impact of additional reporting, however, is minimal because the goal of The National Response Center is essentially to inform local implementing agencies. This will already have been done when the owner or operator fulfills the requirements in today's rules.

Although reporting triggers have been established for aboveground releases, this does not relieve the owner and operator of the responsibility to undertake all other appropriate elements of the corrective action process under Subpart F for any aboveground release, regardless if it is more or less than the reportable quantity.

F. Release Response and Corrective Action for UST Systems Containing Regulated Substances

1. Background

Release response and corrective action for UST systems include activities to investigate, report, abate, and remedy releases of regulated substances into the environment. To ensure that necessary steps are taken to protect human health and the environment at all sites discovered to have a release, EPA proposed steps that all owners and operators must take quickly to identify and reduce any immediate health and safety threats posed by releases. In addition, proposed requirements mandated the investigation and amelioration of the long-term threats to human health and the environment posed by releases that have migrated beyond the UST system to contaminate surrounding soil and ground water. Long-term actions would begin after an implementing agency determined that additional corrective action was needed to protect human health and the environment. This determination was to be made on the basis of data gathered and submitted by the owner and operator and a site-specific exposure assessment performed by the implementing agency. Finally, the proposal distinguished between releases of petroleum and hazardous substances by establishing separate corrective action requirements for them in different sections of the proposed regulations (Subpart F for petroleum and Subpart G for hazardous substances).

Today's final rule builds upon this proposed approach, but also reflects several important changes that respond to concerns raised by commenters on the proposal:

- The Agency has consolidated the proposed requirements for petroleum and hazardous substances into one section of the final rule in Subpart F. This consolidation deletes the extensive duplication of requirements in the proposal caused by separating them into two sections.
- The proposed basic framework and most of the proposed requirements for the initial abatement steps required at all release sites are retained in the final rule. Changes have been made, however, to some of the proposed requirements in response to public comments. These changes are intended to clarify the owner's and operator's responsibilities for identifying and addressing the initial health and safety threats posed by releases.
- The final rule retains the proposed requirements for long-term corrective actions, which follow a site-specific approach for establishing clean-up target levels. This section of the rule has been amended, however, to clarify that the owner and operator may proceed, under certain conditions, with corrective action before a corrective action plan has been approved by the implementing agency.
- In response to concerns raised by several commenters, EPA has revised several of the proposed requirements to clarify the responsibilities of owners and operators. Some changes clarify when owners and operators must initiate specific corrective action steps, such as detailed soil and ground-water investigations, particularly in the absence of clear direction from the implementing agency. Other changes more clearly identify what owners or operators must do to carry out their responsibilities in such areas as the initial site investigation, detailed investigations for soil and ground-water contamination, and free-product removal.
- The final rule clarifies the requirements concerning the public participation process for corrective action. The final rule emphasizes the need to ensure public access (primarily through existing state procedures) to information pertaining to specific corrective actions.

In the preamble to the proposed UST corrective action rule, EPA requested comments on several corrective action issues: The general scope of the proposed requirements; how explicitly these requirements should be detailed in the rule; whether the proposed minimum site investigation requirements were appropriate; and the desirability of the proposed site-specific approach to setting cleanup goals for UST sites. EPA also requested comment on the definition of free product, the adequacy of existing state administrative authority for public participation in corrective action, and corrective action requirements for tanks containing a mixture of regulated substances (see 52 FR 12678–12683 and 12751–12757). EPA received comments on all these issues, as well as on other issues not raised specifically by the Agency in the proposal.

Although many commenters believed that the proposed corrective action regulations were essentially sound, EPA received a wide array of responses on key issues. For example, although several commenters disagreed with the Agency's proposed requirements for site-specific cleanup standards, others supported this approach. Several general concerns were repeatedly raised by numerous commenters as they

commented on specific proposed requirements: What must be done and by whom, how much discretion should be granted to the implementing agency to change specific requirements, and what minimum objectives must be met during the various steps in the corrective action process. As noted previously, these general concerns have prompted EPA to make several changes in the final rule, and clarifications appear below in the following two subsections of today's preamble.

General concerns raised by commenters are briefly discussed and responded to in the next subsection of this preamble (section IV.F.2.):

- Site-specific approach to corrective action;
- Discretion for implementing agencies;
- Clarification of owner and operator responsibilities; and
- Consolidation of requirements for petroleum and hazardous substances.

Following the discussions of these issues, section IV.F.3. provides a section-by-section analysis that more specifically addresses the changes made to the proposed requirements in the development of today's final corrective action rule, and the highlights of the public response that prompted these revisions.

2. Major Issues Influencing the Final Rule

a. *Site-Specific Approach to Corrective Action.* In the proposed rule, EPA selected a site-specific approach for setting cleanup target levels for long-term corrective actions. These cleanup levels would be keyed to data obtained from a detailed site investigation of soil and ground-water contamination by the owner and operator, and from a site-specific exposure assessment conducted by the implementing agency. As discussed in the preamble to the proposal (52 FR 12680–12682), EPA believed this approach would allow implementing agencies the necessary flexibility to develop their own programs or implement existing programs. Given the size of the regulated community and the diversity of UST environmental settings, EPA concluded that the site-specific approach was the most effective framework for enabling implementing agencies to assess the extent of necessary corrective action in individual cases.

The final rule retains EPA's selection of the proposed site-specific approach for UST corrective action requirements. A central element of this site-specific approach is the establishment of site-specific cleanup standards that adequately protect human health and the environment. In the preamble to the proposed rule (52 FR 12678–12680), EPA asked for comments on whether the long-term cleanup requirements of the UST corrective action rule should be established: (a) On the basis of national cleanup standards, with a variance provision; (b) to reflect ground-water classification schemes where national standards would apply in some settings, and site-specific cleanup levels in others; or (c) as site-specific standards as proposed.

EPA received comments that supported each of these options, with suggestions on how to implement the preferred option. Most commenters who supported establishing national cleanup standards believed that standards expedite cleanups and provide greater consistency in cleanup goals. They did not provide EPA with information, however, that showed that the use of national cleanup standards would substantially hasten the UST corrective action process or relieve administrative burdens. In addition, EPA is not convinced that the use of a single cleanup standard for UST cleanups will achieve greater consistency in the protection of human health and the environment than a site-by-site exposure assessment approach. At the present time, the Agency's assessment of UST corrective action shows that cleanup results are generally limited by the available technology and particular site conditions rather than by a cleanup standard. EPA also believes that the site-specific exposure assessments for UST releases required in today's final rule can be streamlined so that they will not delay corrective action, as some of these commenters feared. The Agency intends to work with implementing agencies to develop methods to streamline site-specific exposure assessments without diminishing protection of human health and the environment.

Some commenters supported the use of a ground-water classification system for UST corrective action decisions. As discussed earlier in today's preamble, however, EPA has concluded that developing a classification system at the federal level is extremely difficult and unworkable. EPA leaves to the discretion of implementing agencies the choice of whether to establish or incorporate existing ground-water classification systems to assist in their UST corrective action decisions. The Agency notes that the required investigations at UST sites and a site-by-site approach for UST corrective action will likely incorporate many of the same factors used in establishing a ground-water classification system.

In developing today's final rule, EPA noted that the majority of commenters preferred the proposed site-specific approach. The primary reasons cited were that this approach best accommodates the diversity of UST release situations and also reduces, in the aggregate, the cost of compliance. EPA notes, however, that its decision to promulgate a site-specific approach to long-term UST corrective action does not preclude states from establishing cleanup standards in their own UST corrective action programs. The Agency recognizes that some states already have elected to develop and use statewide cleanup standards, sometimes in conjunction with site-specific exposure assessments as part of a variance procedure.

b. *Discretion for Implementing Agencies.* The proposed corrective action rule afforded UST implementing agencies considerable discretion and flexibility in developing their own UST corrective action process. For example, EPA proposed language—such as "unless directed to do otherwise by the implementing agency" and "or as directed by the implementing agency"—to indicate that these agencies could add their own requirements or instruct an owner and operator to bypass certain requirements on a case-by-case basis. EPA felt that the diversity of UST settings and release situations required the implementing agency to have flexibility in tailoring many aspects of the corrective action response so that different releases could be cleaned up effectively and efficiently.

EPA received comments regarding the appropriate level of discretion provided to the implementing agencies. Some commenters warned that vague rule language could lead to arbitrary requests by the implementing agency; others suggested that EPA curtail the implementing agency's authority by issuing more detailed requirements. Several commenters were concerned about delays in site cleanups that might ensue because of additional requests by implementing agencies. Another suggestion was to expand the implementing agency's discretion to require the UST owner and operator to start a site cleanup before a corrective action plan is finalized.

In response, EPA has revised the final rule to clarify which elements of the UST corrective action process are mandatory and which are discretionary. As a result, the final rule mandates the response requirements that must be followed for all releases (§ 280.61), the

investigation and cleanup requirements that are mandatory unless otherwise directed by the implementing agency (§§ 280.62 and 280.63), and the additional site-characterization and cleanup steps that may be required of UST owners and operators if certain site conditions exist or that may be required by the implementing agency (§§ 280.64 through 280.66). EPA notes, however, that section 9008 of RCRA enables state and local regulation to be more stringent than the federal UST program. Thus, even if EPA removed discretion from the federal rules, EPA would not have the authority to prevent implementing agencies from imposing more extensive requirements than EPA under state or local law.

Commenters expressed concerns that cleanup of soil and ground water may be delayed due to lengthy reviews of the corrective action plans by the implementing agencies or by uncooperative owners and operators. In response, EPA has made two changes in the final rule. First, EPA has added the phrase "as appropriate" preceding the list of factors that the implementing agency must consider when reviewing a corrective action plan in § 280.66(b). This change makes it clear that the implementing agency need not formally consider all these factors if the agency determines analysis of these factors is not necessary to ensure protection of human health, safety, and the environment. Second, EPA has provided that owners and operators may begin cleanup of soil and ground water before their corrective action plan is approved by the implementing agency subject to conditions described in § 280.66(d).

In addition, under existing law, EPA or authorized UST implementing agencies can intervene to respond to clean up releases from UST systems. Under section 9003(h)(2) of RCRA, EPA and states under cooperative agreement are authorized to step in and take corrective actions for releases of petroleum from USTs in situations including the following: (1) The owner or operator fails to comply with the established cleanup schedule; (2) there is a need to take emergency action; (3) the cost of a corrective action exceeds the resources supplied by the financial responsibility mechanism provided by the owner or operator; or (4) the owner or operator is insolvent. For a release from a hazardous substance UST, EPA has the authority under CERCLA to respond. States are not provided such authority under CERCLA, but may have their own authorities under state law.

c. *Clarification of Owner and Operator Responsibilities.* Many commenters expressed the opinion that the proposed rule was difficult to interpret with respect to what had to be done and by whom to comply with the federal requirements. EPA agrees with these commenters that the language of the proposed rule was sometimes unclear regarding the specific responsibilities of UST owners and operators. The Agency, therefore, has revised the final rule to make clearer which elements of the corrective action rule are mandatory and which are discretionary.

EPA has concluded that the following basic steps are required to ensure an effective response to every release: rapid notification that a release has occurred; investigation to mitigate fire, explosion, and vapor hazards; preventing further release of the regulated substance from the leaking UST system; and removing free product from the environment. These steps are required of every owner and operator in response to a UST release; implementing agencies may not change these requirements.

Similarly, EPA believes that the following initial site investigation and abatement steps are usually necessary to protect human health and the environment: Estimating the nature and quantity of the release; removing as much of the regulated substance from the UST system as necessary to prevent further release to the environment; and gathering information about the locations of wells, subsurface sewer lines, and populations surrounding the release site. Thus, the final rule holds UST owners and operators responsible for these actions unless the implementing agency directs them to do otherwise in response to site-specific considerations.

The baseline requirements for initial release response and corrective action are covered in §§ 280.61 through 280.63 of the final rule. As noted above, the requirements of § 280.61 in the final rule describe mandatory initial response measures to be taken by UST owners and operators without exception. All UST owners and operators are responsible for meeting the requirements of §§ 280.62 and 280.63, unless the implementing agency directs them to do otherwise. Sections 280.64 and 280.65 address those requirements for which owners and operators are responsible if certain site conditions exist. Section 280.66 describes soil and ground-water cleanup steps that may be initiated by the owner and operator or required at the direction of the implementing agency.

d. *Consolidation of Corrective Action Requirements for Petroleum and Hazardous Substances.* In the preamble of the proposed rule, EPA requested comments on whether the corrective action requirements for petroleum USTs (Subpart F) and hazardous substance USTs (Subpart G) should be integrated into one subpart or should remain separate (52 FR 12678). All commenters responding to this request favored the integration of Subparts F and G; they differed only in their suggestions to EPA on how to combine the two rules.

Today's final rule has consolidated into Subpart F all the corrective action requirements for releases from underground storage tank systems storing substances regulated by Subtitle I. The title of this subpart has been revised to make clear that it addresses both release response and corrective action activities. As can be inferred from the new title, an appropriate response to a release, particularly those small in size that were caught quickly and remedied, may not need to include long-term corrective action, if the initial response measures adequately protect human health and the environment.

The general applicability sections of the proposed petroleum and hazardous substance requirements (proposed § 280.60 and § 280.70, respectively) have been replaced with a single new section. This revised section states that where RCRA Subtitle C corrective action requirements apply to UST releases at permitted RCRA facilities, Subtitle I corrective action requirements will not apply. EPA has added this provision to avoid possible duplication of requirements.

The initial abatement requirements have been retained in the final rule. In response to commenters who preferred the more detailed language used in proposed Subpart G, the Agency has carried forward the language emphasizing immediate action to prevent further releases and the containment of visible releases to the environment. The principal change in the initial abatement requirements provides owners and operators and implementing agencies greater discretion for determining the need for and timing of contaminated soil removal and the authority to decide appropriate soil management alternatives on a site-by-site basis.

The proposed rule for hazardous substance USTs had no separate section comparable to the proposed petroleum rule's requirements for free product removal. By merging Subparts F and G, EPA extends the free product removal requirements to all regulated substance

releases, including removal requirements detailing precautions and other measures to follow during recovery operations. EPA recognizes that detection and removal of some hazardous substances can be far more difficult than removal of petroleum free product, especially in areas of complex hydrogeology. The Agency believes, however, that the free product removal requirements allow implementing agencies sufficient flexibility to consider factors that complicate the detection and removal of free product and to adjust the pace of actions to remove free product accordingly.

Both proposed rules had requirements governing additional investigations and the cleanup of contaminated soils and ground water at UST release sites. The final rule also contains these requirements in §§ 280.65 and 280.66, which are discussed in more detail later in the next subsection of this preamble.

Both proposed rules contained reporting requirements. The hazardous substance rule, however, required additional specific reporting items, such as likely migration routes and proximity to population centers. These additional reporting items have not been retained in the initial site investigation requirements of Subpart F because they are largely duplicative of the reporting requirements contained within final § 280.63, which governs initial site characterization. Moreover, implementing agencies continue to have the authority to require the reporting of additional specific information should the need arise.

The public participation requirements of both rules have been combined into a single section of the final rule.

3. Section-by-Section Analysis

In writing the final rule, EPA revised proposed §§ 280.60 through 280.66 to clarify the release response and corrective action steps. Most of the changes are editorial, prompted by concerns or confusion expressed on the part of commenters. Some substantive changes, however, were also made in response to public comments. The following sections discuss in detail the changes made to the proposal as reflected in today's final rules. Issues raised by commenters on the proposed requirements and the Agency's consideration of these issues are also briefly discussed.

a. *General (§ 280.60).* Proposed § 280.60 applied the corrective action requirements of Subpart F to all UST systems except those exempted by statute or regulation. Owners and operators of tank systems for which other subparts of the proposed technical standard are deferred were nonetheless required to comply with the Subpart F requirements in response to confirmed releases.

In the final rule, EPA has added language to clarify the applicability of Subtitle C or Subtitle I requirements to USTs at RCRA-permitted facilities and to avoid potential overlap in regulatory authority. Section 280.60 of the final rule reflects the fact that the Subtitle C corrective action requirements under the authority of RCRA 3004(u) will apply to many releases from UST systems located at RCRA-permitted facilities, regardless of the regulated substance stored. For USTs not covered by 3004(u), including facilities without a final RCRA permit, Subtitle I corrective action standards will apply to releases from all petroleum and hazardous substance tanks covered under Subtitle I. UST corrective actions underway at facilities having interim status under RCRA may be subject to review under the RCRA corrective action program during the development of a final permit, and these ongoing corrective action activities may be incorporated into the facility's RCRA permit.

b. *Initial Response and Reporting Requirements (§ 280.61).* Proposed § 280.61 (initial abatement requirements and procedures) has been separated into three new sections in the final rule: initial response (§ 280.61), initial abatement measures and site check (§ 280.62), and initial site characterization (§ 280.63). These sections, plus free product removal (§ 280.64), encompass the first phase of the UST corrective action process. As with the proposal, EPA intends these final requirements to achieve three goals: (1) To bring UST release sites under control with respect to immediate health and safety hazards; (2) to stabilize the site so that contamination will not worsen as investigations and potentially applicable long-term cleanup plans are considered; and (3) to be self-implementing, in that these measures emphasize the responsibility of the owner and operator to take quick action without awaiting direction from the implementing agency. Thus, §§ 280.62 through 280.64 in the final rule represent the baseline release response and corrective action requirements that are mandatory for all UST owners and operators and all releases, unless the implementing agency directs otherwise. The rule has been reformatted to make this clearer. The initial response requirements of § 280.61 are mandatory for all owners and operators and all releases without exception. In addition, §§ 280.60 through 280.64 have newly added reporting sections. The new placement of these reporting requirements clarifies the owner's and operator's responsibilities with respect to the timing and content of the required reports.

The final requirements of § 280.61 for initial response and reporting are essentially identical to those proposed. The primary difference is that the wording has been changed to make unambiguous the response required within 24 hours. These initial actions include: Reporting the confirmed release to the implementing agency; taking immediate steps to prevent further release to the environment; and mitigating fire, explosion, and vapor hazards. EPA recognizes that, in some cases, it may not be possible to complete these steps within 24 hours. For example, it is sometimes easier to confirm that a release has occurred than to identify the precise location of the release from the UST system. Similarly, it may take longer than 24 hours to adequately vent hazardous vapors from building. In revising this section, however, EPA emphasizes the potential urgency of a release and the responsibility of the owner and operator to quickly respond.

c. *Initial Abatement Measures and Site Check (§ 280.62).* In order to clarify the on-site management steps that EPA believes are necessary to abate hazards and stabilize the site, the Agency has grouped initial abatement requirements into § 280.62. Two of the requirements in this section are carried forward from those in proposed Subpart G. First, § 280.62(a)(1) requires removal of the regulated substance from the tank as "necessary to prevent further release to the environment." EPA has added this phrase to acknowledge—as some commenters pointed out—that some situations may not require complete removal of product from the tank (e.g., if the release is clearly demonstrated to be from one tank that is part of a multiple tank system). Second, § 280.62(a)(2) carries forward the requirement to visually inspect aboveground releases or exposed belowground releases and to prevent further migration of the released substance into surrounding soils and ground water (e.g., by using sorbents and berms to control the flow of product).

Section 280.62(a)(3) has been added to clarify EPA's proposed requirement to "mitigate fire and safety hazards." EPA agrees with commenters who noted that these hazards may persist or reappear beyond the initial response phase and, thus, must be monitored and remedied throughout the cleanup process. The new requirement also emphasizes that,

if present, these hazards may require mitigation both within and beyond the boundaries of the UST site (e.g., in subsurface sewer lines or nearby buildings).

The requirement in proposed § 280.62(a)(4) to remove "visibly contaminated soil from the UST excavation zone" has been deleted. EPA received many comments on this proposed requirement. Most commenters expressed confusion regarding the definition of visible soil contamination and other concerns related to the appropriate timing and extent of soil removal. Commenters identified cases where a strict interpretation of the requirement (e.g., removal of slightly discolored soils) would translate into aggressive soil removal that would be unnecessary, technically infeasible, and very costly. Some commenters noted that extensive soil removal at UST sites could exacerbate problems of the nation's limited landfill capacity, if these soils were taken off-site for disposal. Other commenters suggested that soil removal or treatment (beyond that which is needed to address immediate health and safety hazards) should be considered as part of the long-term plan for corrective action. Many commenters suggested that EPA consider various *in situ* or on-site treatment methods as alternatives to immediate removal and disposal of contaminated soils.

EPA agrees with these commenters. In particular, EPA is concerned that requiring immediate and extensive excavation of contaminated soil may transfer contamination to other media (e.g., air), may transfer risk from one site to another, or may spread contamination at the release site beyond its existing extent. These outcomes are inconsistent with EPA's objective to protect human health and the environment. Further, EPA did not intend to preclude consideration of alternative on-site or *in situ* treatment methods.

As a result, EPA has created a new § 280.62(a)(4) to clarify the objectives of soil management that must be undertaken during the initial phases of corrective action. The new requirement states that UST owners and operators must remedy hazards posed by contaminated soils that are excavated or exposed as a result of release confirmation, site investigation, abatement, or corrective action measures. These hazards include vapor threats and potential leaching of contaminants. EPA believes this new requirement addresses concerns raised by commenters by more clearly stating the scope and the objectives of initial soil management.

In contrast to the proposed requirement for soil removal, EPA has not prescribed a specific management method. The final rule does, however, require that any exposed soils be managed as necessary to remedy hazards such as those mentioned above. EPA expects there will be UST release situations where prompt soil removal and disposal may be the most effective option (e.g., where there are relatively small quantities of contaminated soil in urban areas having high potential for human exposure to vapors, and where excavation equipment is already on-site for use in investigating the tank system). In such situations, soil removal may be necessary to bring the site under control with respect to immediate threats and might also be adequate to complete cleanup at the site. In response to commenter's concerns that soil management not simply transfer risk, EPA has, however, added a new requirement to the rule. If the owner and operator choose to treat or dispose of contaminated soils, they must comply with applicable state and local requirements. (See also section VI.B. of today's preamble: Relationship to Other Agency Programs.)

EPA received comments regarding the explicitness of the proposed site investigation requirements for corrective action, as well as for release confirmation and tank closure activities. Some commenters requested more specificity; others pointed out the difficulty of prescribing uniform requirements for all sites. In response, EPA has revised the rule (adding new §§ 280.52(b), 280.62(b) and 280.72(a)) to make consistent the site investigation requirements for release confirmation, corrective action, and tank closure and to avoid potential duplication of these requirements within the rule. (See section IV.E.2.c. of this preamble for an explanation of these site investigation requirements.) EPA believes this revised statement of site check responsibilities, in conjunction with the new initial soil management requirements, addresses commenters' request for greater clarity concerning their investigation responsibilities without unduly restricting alternative investigative techniques.

EPA recognizes, however, that the primary hazard posed by contaminated soil at some sites will be as a continuing source of ground-water contamination. EPA addresses this concern through the final requirements for site characterization and for delineating the extent and location of contaminated soils (§§ 280.63 and 280.65). As discussed later in this preamble, these investigation results must be considered by the owners and operators and by the implementing agency with respect to site-specific exposure potential and effects on ground-water resources. EPA believes that, in some cases, it may be preferable to treat contaminated soil on-site or *in situ*. The Agency is preparing technical information that will help owners and operators and implementing agencies assess the potential hazards posed by contaminated soils and alternative methods to treat or dispose of them.

Section 280.62(b) in the final rule states that owners and operators are required to report their initial abatement steps to the implementing agency within 20 days of release confirmation. Some commenters noted that this time frame, which was proposed in § 280.61(a)(5), could be interpreted to mean that EPA expected all the abatement measures in proposed § 280.61(a) to be completed within 20 days. EPA expects that many of the initial abatement requirements can and should be completed within 20 days, but that some aspects of soil management and free product investigations and removal may require more time to complete. EPA has thus amended the wording to clarify that the objective of this provision is to require owners and operators to report their *progress* to the implementing agency.

d. *Initial Site Characterization (§ 280.63).* Proposed as § 280.61(b), this requirement has been amended (and renumbered as § 280.63) to clarify the responsibility of owners and operators to collect and submit site information to the implementing agency. Several commenters noted that the same techniques can be used to confirm a release and to investigate contamination at a site. They expressed concern that important information gained while confirming a release or abating immediate hazards should also be included in the information submitted to the implementing agency. Section 280.63 in the final rule emphasizes this point and requires that owners and operators submit all pertinent information about the site and nature of the release.

In addition, §§ 280.63(a) (1) through (4) in the final rule describe the minimum site investigation requirements that the owner and operator must follow in the absence of other direction provided by the implementing agency. Section 280.63(a)(1) is unchanged from proposal, and it requires information on the nature and estimated quantity of the release.

Section 280.61(a)(2) continues to require owners and operators to submit

information from readily available sources or site investigations regarding surrounding populations, subsurface soil conditions, climate, and land use (e.g., from sources such as U.S. Geological Survey maps, Soil Conservation Service maps, and local agencies). UST owners and operators are not automatically required to conduct surveys to collect this information if it is not already available.

In addition, two new requirements have been added to this section. First, information about water quality at all wells potentially affected by the release partially supplants the more general proposed requirement for ground-water and surface water sampling formerly in § 280.61(b)(3). As discussed in more detail in section IV.C.f. of this preamble—investigation for soil and ground-water cleanup—the proposed requirement to delineate the extent and location of dissolved ground-water contamination has been amended. The final rule requires full characterization of dissolved ground-water contamination if certain site conditions are met, or at the direction of the implementing agency. If nearby existing wells are potentially affected, however, EPA requires the owner and operator to immediately characterize their quality and use because they are potential human exposure points and because pumping at these wells can affect contaminant migration. Second, several commenters noted that subsurface sewer lines are often conduits for rapid migration of vapors or liquid product. Thus, EPA now requires owners and operators to submit information on the location of subsurface sewer lines (if any) at the site.

Section 280.63(a)(3) cross-references the site investigation requirements described earlier and requires the owner and operator to submit the results of this investigation as part of the site characterization report. This new section replaces proposed § 280.61(b)(2), which required sampling of surface and subsurface soils. As described earlier, this change clarifies the investigation requirements and eliminates their possible duplication within the rule. The timing and reporting of this investigation is unchanged.

Section 280.63(a)(1) replaces proposed § 280.61(b)(3), which required sampling of surface and ground-water at the site. This new section, in conjunction with § 280.65 (described in subsection f., below), reduces the ambiguity noted by some commenters regarding the scope of site investigations. In the final rule, EPA requires characterization of dissolved ground-water contamination when the following conditions exist: There is evidence that drinking water wells have been affected, free product is detected on the water table or within the aquifer; there is evidence that contaminated soil is in contact with ground water; or as directed by the implementing agency. Thus, the presence or absence of free product at an UST release site is one of the factors used to decide whether further investigations of soil and ground-water contamination are necessary. The requirement to investigate for free product is unchanged from the proposed § 280.61(a)(6). The final rule simply requires owners and operators to submit, as part of the initial site report, their findings that establish the presence or absence of free product. EPA believes this action is warranted for several reasons:

- The requirement reinforces for owners and operators the importance of the free product investigation;
- The free product investigation requirement now also applies to releases from hazardous substance USTs, which may contain products that are denser than water and, therefore, may be harder to detect and locate; and
- The conclusion that no free product is found provides another important consideration for the implementing agency as it decides if a corrective action plan will need to be submitted by the owner and operator.

EPA believes this synthesis of information from the initial site investigation is essential for owners and operators to begin to fully assess their cleanup responsibilities, and it provides the implementing agency with information to decide if a corrective action plan is necessary. Section 280.63(b) replaces the proposed requirement for reporting site investigation results. The new section clarifies that the information must be submitted in a manner that is clear and sufficiently detailed to demonstrate its applicability and technical adequacy, or in a format developed by the implementing agency to achieve these same goals.

e. *Free Product Removal (§ 280.64).* In response to commenters, EPA has made minor revisions to the free product removal requirements. Commenters raised four issues: Applicability, the definition of free product, the extent of removal, and the timing of removal. These issues are discussed below.

First, EPA agrees with those commenters who suggested that free product removal requirements similar to those proposed for petroleum releases should also apply to hazardous substance releases. The final rule's Subpart F merges the proposed rule's Subparts F and G to make free product removal requirements applicable to all releases.

Second, EPA has revised the definition of free product to clarify the scope of free product removal. Several commenters noted that, as proposed, the broad definition of free product could be interpreted to mean that removal requirements apply to product bound to soil particles or present as vapors. EPA notes that these forms of product are addressed, as appropriate, in other sections of today's final rule and has revised the definition of free product to more narrowly refer to a regulated substance that is present as a non-aqueous phase liquid (e.g., not dissolved in water). EPA has also deleted the reference to "floating" free product (from proposed § 280.62) to clarify that product more dense than water is also subject to the free product removal requirements.

Third, other commenters requested clarification on how much free product was required to be removed. In the final rule, the Agency has retained the phrase "maximum extent practicable" as the criterion for free product removal operations at UST release sites. EPA has not specifically defined maximum practicable removal because the extent of removal is largely determined by available technologies and site-specific conditions. Consequently, EPA believes that implementing agencies should have the discretion to develop operational criteria for determining the presence of free product and the extent of its removal (e.g., product that flows in response to gravity or a minimum product thickness observed in wells). EPA has, however, added to the final rule a minimum objective for free product removal operations. This new requirement states that, at a minimum, free product removal systems should be designed to abate further migration of free product (i.e., beyond small seasonal or recovery-related fluctuations).

Fourth, several commenters offered their views about the appropriate timing of product removal. Most commenters agreed with EPA's proposal that free product removal operations should begin as quickly as possible, but cautioned that hasty and improperly conducted removal could spread contamination vertically at the site. In the final rule, EPA continues to require that removal begin as quickly as practicable (§ 280.62(a)(6)). Revised § 280.61(a) emphasizes, however, that free product removal must be conducted in a manner that minimizes the spread of contamination and that is appropriate

to the hydrogeologic conditions at the site. EPA is aware, for example, of site conditions where trenching or vapor extraction to recover free product would be preferable to drawing down the water table—and the free product plume—in order to collect and remove free product. EPA is preparing technical resource documents to assist implementing agencies in advising owners and operators about potential complications when removing free product. Similarly, in response to commenters concerns, EPA has extended the time period for owners and operators to report to implementing agencies concerning their free product removal from 30 to 45 days. This change will allow owners and operators more time to properly plan for free product removal, especially for removal operations involving dense product or at hydrogeologically complex sites.

In addition, some commenters requested EPA clarify permitting requirements for discharges from the product recovery system. Others suggested that EPA exempt UST cleanups from NPDES requirements or establish numerical limits for emergency permits. In response, EPA has revised § 280.64(a) to clarify that all discharges are to be properly treated, in compliance with applicable Federal, state and local regulations. In addition, EPA is investigating methods to expedite, where applicable, the NPDES permitting process for discharges necessitated by UST corrective action.

f. *Investigations for Soil and Ground-Water Cleanup (§ 280.63).* Proposed § 280.63 has been renumbered § 280.65 in the final rule. As proposed, this section required the owner and operator to investigate the extent of soil and ground-water contamination at an UST release site when the initial site investigation showed that contaminated soil remained at the site, or when the required soil removal showed that the released product or product from contaminated soil may have reached ground-water. In addition, the implementing agency could direct the owner and operator to conduct such an investigation.

Several commenters requested that EPA clarify the minimum sampling requirements for these investigations. Other commenters suggested that these more extensive investigations be better coordinated with the soil and ground-water sampling required earlier in the corrective action process. One commenter noted that the phrase "product from contaminated soil" would be difficult to define and might be interpreted to require extensive investigation at virtually all sites. In addition, EPA recognizes that some amount of contaminated soil will be present at most UST release sites, but that the threat posed by this contamination will depend on several factors.

In response to these comments, EPA has revised this section to clarify the situations that trigger more extensive site investigations. EPA notes that the objective of these investigations is to support decisions concerning whether soil and ground-water cleanup or other corrective action measures are necessary at the site. Consequently, EPA has revised the rule to better relate these requirements to site-specific threats to ground-water contamination.

Final § 280.65 describes three specific site circumstances requiring full for characterization of soil and ground-water contamination: (1) When release confirmation or previous corrective action measures indicate that ground-water wells may have been affected by the release, (2) when free product is found on the water table or within the aquifer, and (3) when any other site investigations show that contaminated soil may be in contact with ground water.

EPA recognizes that characterization of soil and ground-water contamination may also be necessary at sites where there are no "automatic triggers." Thus, the final rule retains the authority of the implementing agency to request an investigation. Final § 280.65(a)(1) clarifies that the implementing agency should consider the potential effects of contamination at the site in relation to nearby surface and ground water resources when deciding whether further investigations are warranted. In particular, EPA expects that information required under § 280.63 will provide implementing agencies with important information for determining if more extensive investigations are required.

In revising the rule, EPA sought to better tailor the investigation requirements to site conditions that pose a potential threat to ground-water resources. EPA believes the final rule clarifies those situations that trigger more extensive site investigations and better coordinates the objectives of the revised corrective action requirements within a site-specific framework.

g. *Corrective Action Plan (§ 280.66).* In the final rule, proposed § 280.64 has been renumbered as § 280.66 and retitled as "Corrective Action Plan." This revised section responds to commenters' requests for clarification of the owners' and operators' responsibilities for submitting corrective action plans (CAPs) and of the implementing agencies' responsibility to request, review, and approve a CAP. Subtitle I of RCRA directs the Agency to promulgate corrective action regulations applicable to owners' and operators' of UST systems. The corrective action plan approval process, however, integrates the responsibility of owners and operators to ameliorate the adverse effects of UST releases with the responsibility of implementing agencies to determine how they will carry out their established public health policies. EPA's role is to: (1) Establish the responsibility of owners and operators to achieve adequate protection of human health, and (2) establish a baseline framework for evaluating and approving corrective action plans.

Several commenters requested clarification of the owners' and operators' responsibilities for corrective action beyond immediate abatement steps and removal of free product. In response, § 280.66(a) of the final rule has been revised to clarify that owners and operators are responsible for submitting, when requested by the implementing agency, a corrective action plan that provides for adequate protection of human health and the environment. Section 280.66(b) of the final rule sets forth the factors that implementing agencies must consider when approving a corrective action plan. Consequently, this section also serves to inform owners and operators of the minimum elements required in the plans they submit.

Some commenters suggested the Agency establish explicit criteria that implementing agencies could use to determine whether a CAP is needed and to evaluate CAPs after they are submitted. As described in the preceding sections, EPA has revised several parts of the proposed rule to clarify the objectives of each step of the corrective action process. Owners and operators are responsible for carrying out and reporting these actions, thus providing the implementing agency with a good basis for determining the necessity for additional cleanup.

EPA believes it would be difficult and unproductive to incorporate more explicit evaluation criteria in today's rule. As described earlier in this preamble, EPA received wide support for the proposed site-specific corrective action goals and has retained this approach in the final rule. Implementing agencies, however, may choose to develop their own site-specific corrective action goals, or they may base cleanup goals on statewide numerical standards or aquifer

characteristics. Rather than develop criteria that may conflict with a state or local agency's preferred method, EPA has chosen to identify in the rule those factors that are generally necessary for carrying out corrective actions regardless of the chosen method for setting precise cleanup goals. For example, these factors include the persistence of the released substance and the hydrogeologic conditions at the site. EPA sees its role primarily as providing technical support for interpreting these factors in the context of site-specific application of corrective action technologies. In particular, EPA is developing technical information and supporting materials to assist implementing agencies in relating site assessment results to the feasibility of alternative technologies, and for evaluating how well these technologies are achieving cleanup at a site. In addition, EPA is beginning to develop methods to expedite exposure assessments. Other programs within EPA, such as the Office of Ground-water Protection, may also be called upon to provide support for evaluating ground-water resources.

The overall objective of longer term UST corrective actions is to adequately protect human health, safety, and the environment from contaminants remaining in soils or ground water after initial abatement measures and free product removal. The Agency prefers that this objective be achieved, where practicable, through reducing contaminant concentrations in soil or ground water to levels protective of health and the environment. In some situations, however, the Agency would require—under the standard in § 280.66(a)—that human health be protected from exposure to contaminants through other appropriate measures, such as providing an alternative water supply.

EPA cannot project the outcome of its site-specific approach to all UST releases because the consideration accorded to some factors, such as aquifer resource value and its current and potential use, is largely left to state and local policy. If an UST release affects a public or private drinking water source, however, the owner and operator must expect that the state's health-based drinking water standards would apply to the cleanup. If the owner and operator cannot meet these standards through cleanup technologies, then they should expect that they will be required to provide an alternate source of drinking water or to provide treatment of the water to the people affected. Similarly, the owner and operator should expect that UST releases that threaten current or potential water supplies will come under close scrutiny by the implementing agency. In these cases, the corrective action requirements will likely be influenced by the mobility of the contaminants at the site and the estimated time and spatial extent over which the remaining contamination may pose a threat. At a minimum, approved CAPs would likely include requirements for long-term monitoring, continued control of ground-water flow at the site, and notice of continuing hazard in the property deed.

The final rule retains the implementing agency's authority to require submission of a CAP based on information received from early corrective action measures. (EPA expects, for example, that implementing agencies might choose this option for UST releases that are of great magnitude or in close proximity to drinking water resources.) Final § 280.66(a), however, has been revised to make clear that the implementing agency must first review the submitted material before requesting the submission of a CAP or additional information. This section also has been revised to enable owners and operators to submit a CAP for soil and ground-water cleanup based on their own initiative and assessment of the severity of the release. They need not wait for the implementing agency to request a CAP.

Several commenters expressed concern that lengthy reviews by the implementing agency might slow the pace of UST cleanups, creating delays that could make implementing the final CAP more difficult, because of the spread of contamination while delays persist. Some commenters also suggested that owners and operators should be allowed—after a specified length of time—to interpret inaction on the part of the implementing agency as approval of the CAP.

Given the number of releases that are expected to be detected in the near future, EPA acknowledges that there is potential for delayed cleanups under the proposed approach if implementing agencies are unable to review all the CAPs in a timely manner. The Agency concluded, however, that the alternatives suggested by commenters were inappropriate. To respond to this issue, however, § 280.66(d) has been added to allow owners and operators to begin cleanup of soil and dissolved contaminants in ground water without CAP approval provided they: (1) First notify the implementing agency of their intention to begin cleanup, (2) comply with modifications imposed by the implementing agency, including halting cleanup activities, and (3) incorporate these initial measures in the CAP to be reviewed and approved by the implementing agency.

EPA has added this provision with the goal of encouraging effective and expedited cleanup of soil and ground water. EPA emphasizes, however, that the implementing agencies remain the final arbiter for approving CAPs. Implementing agencies, therefore, can require the owner and operator to revise their CAPs and to modify the cleanup techniques in use at a site, including mitigating adverse consequences of cleanup activities. Since the implementing agency retains this authority, EPA expects that owners and operators who choose to initiate cleanup prior to approval of this CAP will select cleanup technologies that are widely used and recognized to be effective. EPA believes some cleanup techniques, such as extraction and treatment of petroleum vapors from soils, can be initiated with little risk of worsening contamination at the site. EPA also notes that states need not adopt the policy of owner- and operator-initiated cleanup for state program approval. Moreover, if states choose this option they can tailor its use to best meet their needs. For example, the implementing agency can identify specific cleanup technologies that are widely applicable without prior review or approval and those that always require explicit plan approval. Similarly, implementing agencies can decide to limit this option for use only at releases from certain USTs, such as petroleum USTs.

h. *Reporting (Proposed § 280.65).* The reporting requirements in this section of the proposed rule have been consolidated with the requirements in § 280.51 of the final rule because they are part of the release confirmation process.

i. *Public Participation (§ 280.67).* The proposed public participation rule required implementing agencies to provide opportunity for public review and comment on all CAPs and to consider these comments before approving CAPs.

Although commenters agreed that public participation is desirable, many commenters expressed concern that protracted public participation during the development of *all* CAPs could unnecessarily delay some UST cleanups. For example, cleanup efforts could be delayed while the development of a CAP was submitted to lengthy public review and deliberation. Also,

mandating public participation for all CAPs could divert implementing agency resources from other cleanup activities such as oversight of ongoing cleanup operations.

EPA agrees with commenters who urged that implementing agencies strike a balance between the involvement of the public in corrective action decisions and the sometimes competing need to protect human health and the environment through quick and effective responses to an UST release. To acknowledge these sometimes conflicting objectives, the final rule for public participation establishes a flexible approach that ensures public access to available information on UST cleanups, although the public need not be involved, as a matter of routine, in all CAPs.

Implementing agencies continue, however, to have the responsibility and authority to notify the public about CAPs, to provide public access to the site and cleanup files, and to involve the public in meetings if sufficient interest is demonstrated. The final rule's public participation requirements for UST corrective action stress the need for adequate public notice, particularly to those parties who could be directly affected by the release and the planned corrective action. EPA expects that the public will be provided adequate opportunity to participate in and aid the UST cleanup process.

EPA does not agree with those commenters who opposed including any public participation requirements in the UST corrective action rule. In particular, EPA does not agree with the concerns raised that RCRA does not explicitly require public participation under Subtitle I. EPA believes that section 7004 of RCRA specifically mandates that all of the Agency's RCRA programs provide for the opportunity for public participation, including the RCRA Subtitle I program. This statutory mandate, combined with long-standing EPA policies to involve the public in the cleanup of contaminated sites, has prompted EPA's decision to keep the public participation requirements in Subpart F. In meeting this need, however, EPA has intended to require public notice and participation in UST corrective actions in a form that does not unnecessarily disrupt what state UST programs already require and provide.

The final rule requires public notification and public availability of information on CAPs. The implementing agency must notify the public about each confirmed release requiring a CAP. This notification requirement remains as proposed, although the rule no longer mandates implementing agencies to formally consider and respond to public comment before approving a CAP. The implementing agency must also provide public notice if implementation of the CAP does not achieve the established cleanup levels and the implementing agency is considering terminating the CAP. In most states, those affected by the release are often kept well informed through personal contacts with the state response staff. Today's requirements are not intended to change this practice of personal contact as one of the first points of public notice in the existing state UST programs. This method of notice has been added to the rule to make this clear. The list of public notice vehicles contained in the rule, however, is not intended to be exhaustive.

In addition to this notification requirement, the final rule requires the implementing agency to provide public access to site release information and decisions concerning the CAP. By providing public notification and access to information, implementing agncies ensure the opportunity for public participation in specific CAPs of interest to the affected sectors of the public. Because the Agency considers public notification and public access to information to be the key components of public participation for all CAPs, the final rule emphasizes the importance of these two requirements.

The implementing agency may hold a public meeting to consider public comments on a CAP if sufficient public interest is shown concerning a proposed CAP. EPA uses the phrase "public meeting" in the rule to emphasize that a formal public hearing is not required. EPA intends that a public forum be provided, in keeping with the state's administrative procedures, to inform the public and allow public comment on a CAP. The implementing agency will decide when public meetings are warranted on a case-by-case basis. EPA expects that large releases involving extensive corrective action will include correspondingly more extensive public participation because public understanding and acceptance is critical to the success of these CAPs.

In summary, the final rule emphasizes the implementing agency's responsibility to involve the public in a manner that best serves the environmental goals of the CAP.

G. Out-Of-Service UST Systems and Closures

1. Introduction

As discussed in the preamble to the proposed rule, the principal objective of the UST system closure requirements is to identify and contain existing contamination and to prevent future releases from UST systems no longer in service (52 FR 12757). Available information suggested that UST systems improperly closed in the past have had undetected releases that later required corrective action. More of these systems may be found to have leaked and, in the future, require additional corrective action. Because a large number of existing UST systems are expected to close in the next 5 to 10 years, EPA believes that it is particularly important to require proper management procedures for out-of-service UST systems so that contamination due to improperly closed UST systems can be prevented from posing a threat of additional releases in the future and needed corrective action can be identified and taken. The comments on the proposal generally acknowledged that proper closure is an important aspect of sound UST management.

The closure procedures are covered in §§ 280.70 through 280.74 of the final rule. Section 280.70 describes the requirements that must be complied with at all UST systems temporarily closed for less than 12 months. It also requires tanks that do not meet requirements for new or upgraded USTs, and that are taken out of service for 12 months or longer, to permanently close. Those USTs that do meet requirements for new or upgraded USTs can remain indefinitly out of service. Section 280.71 provides requirements for permanently closing or changing the service of an UST system, including identification of alternative methods for permanent closure and procedures for continuing the service life of an UST system when it is to be used for the storage of non-regulated substances. Section 280.72 describes the requirements for assessing the UST system excavation zone at closure. Section 280.73 requires owners and operators to apply the permanent closure and site assessment requirements of the final rules to UST systems taken out of service before the effective date of the regulations, if so directed by the implementing agency. Section 280.74 lists the recordkeeping requirements. These proposed requirements, highlights of public comments on them, and the Agency's approach to the final UST system closure standards are discussed in more detail below.

2. Temporary Closure (§ 280.70)

To prevent owners and operators from improperly closing UST systems in the future, EPA proposed requirements in § 280.80 (a)–(b) for tanks temporarily

taken out of service for up to 24 months. These provisions only covered UST systems when a regulated substance was left in the tank and did not distinguish between unprotected tanks and protected tanks that met the requirements for new or upgraded UST systems.

The applicability of these requirements depends upon what constitutes temporary closure. Although a number of suggestions were received, generally commenters recommended defining temporarily closed based on both the use of the tank and how frequently regulated substances are typically moved through it. The failure to fill and/or take regulated substances from a tank on a regular basis, however, was not always considered to be a reasonable criterion for determining the tank was temporarily closed. Commenters cited several examples of infrequently used tanks where temporary closure was not appropriate, including emergency generator tanks and backup system tanks from which fuels were not typically dispensed for long periods of time.

The Agency believes that owners and operators will generally pay more attention to tanks that are used frequently than to those that are used only occasionally or are temporarily closed. Thus, the operation and maintenance procedures used to ensure the integrity of a tank and the effectiveness of release detection efforts instituted to identify leaks in and around a tank will be somewhat related to whether the tank is being actively used or not. Other possible factors in determining whether a tank is temporarily closed include adherence to the normal operation and maintenance procedures at the facility, the types and amounts of regulated substances stored at the facility, the likelihood that an undetected leak has occurred or may occur in the future, and the potential that the tank has become a receptacle for illegal dumping. The Agency does not intend that the emergency generator and backup fuel system tanks cited by commenters should be subject to automatic closure requirements merely because regulated substances are not moved through the tanks on a regular or frequent basis. If, however, the infrequent use of such a tank cannot be justified as part of its purpose and/or if the operation, maintenance, or release detection procedures associated with the tank are inadequate or inconsistent with the monitoring procedures required for operating tanks, the tank will be considered temporarily closed and, after 12 months is up, subject to permanent closure requirements in accordance with § 280.70(c) of the final rule.

Several commenters pointed out that proposed § 280.60 (a)–(b), which covered temporary removal from use and temporary closure, only applied at tanks where the regulated substances were left in the tank. As a result, if the regulated substances were removed from the tank, the proposed rule appeared to exclude UST systems from the further application of the temporary closure provisions. EPA intended, however, that the closure requirements should be applicable to all UST systems that are taken out of service regardless of the quantity of regulated substance remaining in the tank. The Agency also believes that continuation of release detection is not necessary when the regulated substances and residual material have been adequately removed from the UST system. Therefore, the revisions to § 280.70(a) of the final rule subject tanks from which the regulated substances have been removed to the temporary closure provisions, but allows the owner or operator to discontinue release detection as long as the UST system is completely empty.

The final rule also does not contain a requirement to test the integrity of a temporarily closed tank before refilling, although several commenters suggested that such a test should be conducted before materials are reintroduced into an empty tank. EPA does not agree that such a requirement would provide significant benefits. There is no evidence that empty tanks are more vulnerable to structural failure than filled tanks. In addition, the Agency believes that the release detection standards set forth in the final rule are sufficient to rapidly detect any leaks or structural failures that may occur once the system is brought back into service.

Several commenters requested guidelines for determining when an adequate amount of the regulated substance has been removed from a tank to preclude the tank from the temporary closure requirements. In response to these comments, the final rule makes it clear all tanks that contained a regulated substance are subject to the temporary closure requirements regardless of the amount of material remaining in the tank when it is taken out of service. If the tank is empty, however, the owner and operator are not required to maintain release detection around the tank. The term "empty" is defined by incorporating the definition of "empty container" set forth in EPA regulations under Subtitle C of RCRA. This definition requires all materials to be removed that can be removed using commonly employed practices. No more than 2.5 centimeters (one inch) of residue or 0.3 percent by weight of the total capacity of the tank can remain in the system. EPA believes that this definition is adequate to ensure that the regulated substances remaining in the tank will not pose an unreasonable risk to human health and the environment if a release occurs during the temporary closure period.

To prevent owners and operators from indefinitely postponing permanent closure, EPA proposed in § 280.80(c) that all tanks be closed that had been out of service for more than 24 months. This period was considered a reasonable time for tank owners and operators to decide whether to permanently close or continue the use of a tank. The period recommended to be allowed for temporary closure by commenters varied greatly. Commenters cited numerous cases where mandatory permanent closure after 24 months of temporary closure was neither appropriate nor justified. Most state regulatory authorities commenting on this proposal recommended a shorter temporary closure period.

One of the principal reasons cited by the commenters recommending extending the temporary closure period was that tanks in compliance with the appropriate corrosion protection and leak detection procedures do not pose a significant threat of future releases. The commenters also argued that the permanent closure of such tanks would create an economic hardship without providing any significant environmental benefit. EPA agrees with these commenters that UST systems that are adequately protected from corrosion and equipped with release detection systems pose a significantly lower threat to human health and the environment than unprotected tanks. This conclusion is also consistent with the comments submitted by state regulatory authorities that recommended a reduction of the closure period. Their recommendations are believed to stem primarily from the states' experience with unprotected, bare steel tanks and, consequently, strongly suggest that significant damage to the public health and the environment could occur if unprotected tanks are allowed to temporarily close and are left unattended for long periods of time. Therefore, § 280.70(c) in the final rule reduces the allowed period for temporary closure of unprotected tanks from 24 months to 12 months. Any temporarily closed UST systems that do not comply with the performance standards for new tanks under § 280.20

or the upgrade requirements for existing tanks under § 280.21 must permanently close after the 12 month temporary closure period ends. However, UST systems that comply with the performance standards for new or upgraded UST systems set forth in the final rule may remain out of service indefinitely so long as they remain in compliance with the operation, maintenance, and release detection requirements of the final rule. Since spilling and overfilling associated with product transfer should not be a problem around tanks that have been temporarily closed, UST systems are not required to satisfy the spill and overfill requirements for new and upgraded systems in order to be excluded from the 12 month permanent/closure provisions in the final rule.

Many commenters also believed that owners and operators should have a mechanism for seeking and obtaining an extension of the temporary closure period (to avoid the permanent closure requirements) on a case-by-case basis. These comments pointed out that the automatic permanent closure of certain types of tanks was not appropriate after 12 or 24 months (for example, where nearby road construction has temporarily closed the business using the tanks). In response to these comments, a provision has been incorporated allowing the implementing agency to approve an extension of the temporary closure period to address situations where permanent closure of an unprotected UST system is not appropriate after 12 months. To ensure that the variance process is not used to postpone corrective action activities, however, the owner or operator must complete a site assessment before the extension can be applied for.

3. Permanent Closure (§ 280.71)

The proposed rule required the owner or operator of an UST to notify the implementing agency and assess the excavation zone at least 30 days before permanent closure. Several of the commenters argued that completion of the site assessment at least 30 days prior to permanent closure was not always appropriate, for example, in cases where a tank is to be closed by removal or when closure is part of a corrective action. In response to these valid comments, § 280.71(a) of the final rule has been revised to allow more flexibility by requiring the owner or operator to conduct an excavation zone assessment after notifying the implementing agency but before completion of permanent closure. The final requirements continue to require notification at least 30 days before completion of permanent closure. To avoid any potential conflict between the notification requirements of this section and the response requirements under the corrective action provisions, closures initiated as a result of corrective actions under Subpart F are not subject to the notification requirements in § 280.71(a) because the *implementing* agency will have already been notified as part of the corrective action activities.

The methods for permanent closure were proposed in § 280.80(f) and the revised methods are set forth in § 280.71(b) in the final rule. Emptying the tank by removal or filling with an inert solid material was a prerequisite for permanent closure under the proposed rule. The term "empty," however, was not defined in the proposed rule. In response to those commenters who argued that the amount of residual materials remaining in the tank system must be defined in order to minimize any future threat to human health or the environment, the final rule requires the tank to be "emptied and cleaned by removing all liquids and accumulated sludges." In accordance with EPA's effort to build upon accepted industry consensus codes, a note following final § 280.71(c) identifies API 1604 and API 1631 as guidance on cleaning and closure procedures that may be used to comply with these requirements. EPA believes that following these codes concerning the removal of regulated substances and cleaning of tanks before permanent closure will ensure human health and the environment are protected. These codes also address the concerns expressed by a number of commenters regarding the disposal and reuse of tanks that have been removed from the ground. Although not mandated in the final rules, adherence to the guidance in these codes concerning these activities will ensure the safe handling of tanks and will minimize the risk of releases during closure.

The note following § 280.71(c) also contains a reference to the criteria issued by the National Institute for Occupational Safety and Health. These criteria provide guidance concerning the prevention of deaths and injuries to workers involved in the assessment, decontamination, and cleanup of spills and leaks around underground storage tanks. EPA suggests this code is particularly important to consider in the closure of hazardous substance tanks.

The final rule continues to allow owners and operators to permanently close tanks by either removing the tank from the ground or filling the tank with an inert solid material. Several commenters recommended that the rule require removal except when the tank is located under or immediately adjacent to other structures. Their concerns focused upon the potential for releases of residual materials remaining in a tank after it is filled with inert fill and left in place. EPA believes, however, that the final requirement concerning the removal of all liquids and accumulated sludges from the tank (required by § 280.71(b)) and use of the procedures outlined in API 1604 and API 1631 will adequately prevent the future release of residual material after a tank is filled. Therefore, the final rule allows either method of permanent closure.

Several commenters recommended further clarification of the meaning of "inert solid material." The Agency believes that permanent closure in-place will adequately minimize the likelihood of future releases only if the inert fill material specifications and fill procedures used at closure are adequate to prevent the tank from surfacing after closure, will support the structural integrity of the tank as it deteriorates over time (to avoid cave-ins), and will completely seal the tank and associated piping from future use as a tank system. However, the Agency has decided to not specify in detail the materials for filling a tank because of the numerous choices available and the special considerations and problems inherent in each. Sand or concrete, for example, may restrict future construction activities on the site, or may complicate future removal and corrective action activities around the tank. EPA believes that such decisions should be left to the owner and operator to make on a site-specific basis.

EPA also agrees with the commenters who argued that the permanent closure requirements set forth in the proposed rule precluded the reuse of UST systems for unregulated substances. As a result, sound tanks could be forceably discarded even though this would serve no environmental purpose. Therefore, final § 280.71(c) gives owners or operators a third method of closing an UST system. This method allows the owner or operator to complete a change-in-service, which will allow the tank to be used to store non-regulated substances. To complete a change-in-service and avoid the other requirements under permanent closure, the implementing agency must be notified at least 30 days before the change-in-service is completed, and the tank must be cleaned and emptied by removing all liquids and accumulated sludges. In addition, the owner and operator must assess the site in accordance with § 280.72.

4. Assessing the Site at Closure (§ 280.72)

The requirements for assessing the excavation zone around an UST system were proposed in § 280.80(d). Several assessment methods were listed for satisfying these requirements, including the use of external monitoring release detection methods allowed under § 280.41. Several commenters questioned the applicability of one or more of these methods in certain site-specific situations. Some commenters suggested that other equally effective, methods may be appropriate, including internal release detection monitoring. It was also suggested that the nature and extent of the excavation zone assessment should take into consideration various site-specific factors, many of which focused upon whether the tank is closed by removal or by closure in place.

The final rule, as set forth in § 280.72, specifies minimum requirements necessary to adequately characterize the presence of contamination where it is most likely to be present at the UST site. All of the methods listed in the proposed rule have been deleted except the use of external monitoring release detection methods, which continue to be allowed if they are operated in accordance with the final § 280.43 requirements at the time of closure. Some of the other methods suggested by commenters, such as internal release detection monitoring, were not incorporated into the final rule because they do not monitor the condition of the environment outside the tank. EPA remains convinced that this is an important last step before permanent closure is complete to ensure prior releases are not missed or ignored at closure like they have been in the past.

Minimum assessment standards have been set forth in the final rule to coincide with the requirements set forth in Subparts E and F. These standards are designed to ensure that assessment information is representative of the site's condition and is obtained before closure. In order to be representative, the measurement methodology selected by the owner or operator must take into consideration factors such as the nature of the stored substance, type of backfill used around the tank, and the depth to ground water. Any other factors must be considered that may be appropriate for identifying the presence and source of contamination from the UST system. For example, soil gas sampling could be used if the regulated substance contains compounds that are highly volatile and if the local geology and hydrology do not significantly restrict the movement of the volatilized organic species. However, if the regulated substance consists primarily of heavier hydrocarbons and, as a result, the concentration of vapors in the soil is expected to be very low, soil sampling may be needed to provide the necessary representative analytical results.

The site assessment methodology used by the owner and operator must also consider the method of closure. The two allowed tank closure methods may be treated differently because tanks that are removed from the ground enable the bottom of the excavation to be visually inspected. A visual inspection of the tank and excavation zone should provide sufficient information for determining if and where the substances stored in the tank have leaked into the subsurface soil. Using this information, a variety of sampling methods may be adequate to make an initial determination of the presence of contamination and the need for corrective action.

On the other hand, the presence and size of leaks from tanks that are closed in place cannot be visually determined and, consequently, a more comprehensive assessment is necessary. Therefore, several measurement methods may be required to determine if contamination is present around the tank. For example, soil gas samples may be used to help identify where soil samples should be taken. EPA believes that these changes will give the implementing agency greater flexibility to consider a variety of site-specific factors in defining the nature and extent of an assessment. For example, although EPA believes that samples taken below an UST system will generally provide the most representative results, the final rule would allow samples to be taken at any depth or location. However, a state inspection may determine that soil samples taken from the backfill surrounding a tank or soil gas samples taken at depths where significant volatilization has occurred may not be representative and additional testing could be required.

The proposed rule in § 280.80(e) required the owner and operator to comply with the corrective action requirements if a release was discovered as a result of the activities conducted under any of the closure provisions or by any other manner. As a result of comments that emphasized the interrelationship between the corrective action provisions and the closure requirements, the Agency believes that the criteria for initiating corrective action during closure activities should be the same as the criteria for initiating corrective action at any other time during the operational life of an UST system. The final rule sets forth these criteria in § 280.72(b).

5. Applicability to Previously Closed UST Systems (§ 280.73)

To address contamination threats expected to result from past closure practices, EPA proposed in § 280.80(d) that UST systems not properly closed in accordance with recommended industry practices before the effective date of the final regulation be revisited and properly closed. The closure activities were to include a site assessment of the UST system, and notification to the implementing agency. In addition, EPA proposed in this subsection to exept tanks that were previously closed in accordance with one of the existing industry consensus codes from these sites assessment requirements. The Agency specifically requested comments on these previsions in the proposal.

EPA proposed to apply the closure rules retroactively, recognizing that significant manpower and cost could be required to locate all previously abandoned tanks and to conduct site assessments. To reduce this burden and focus only upon abandoned tanks that possed the greatest potential of leaking in the future, the proposed provisions were limited to tanks that had not been properly closed pursuant to one of the industry consensus codes in existence at the time. Those consensus codes were believed to require only removal of the product stored in the tank.

Upon review of numerous public comments received on this approach, it appears that the procedures used to close most abandoned tanks have not been well documented in the past, making it difficult to determine what constituted compliance with this requirement and whether a tank was properly closed. Moreover, several commenters argued that previous industry consensus codes were not designed to ensure containment of the material in the abandoned tank and may have actually facilitated early releases due to the practice of punching holes in the bottom of the tank. Thus, the commenters suggested that tank systems closed by using practices considered state-of-the-art at the time were just as likely to leak as those that were improperly closed. It was also noted by several commenters that the retroactive application of the closure provisions and imposition of site assessment requirements upon owners and operators of abandoned tanks would be costly to implement and would require the commitment of significant resources

by the implementing agencies to track down and enforce.

EPA now believes that many of the concerns raised by commenters are probably well founded if the requirements were applied to *all* USTs closed before the effective date of the regulations. Such a "broad brush" approach would be very difficult, if not impossible, to enforce because of significant problems in locating the large number of tanks abandoned in the past, in identifying previous owners and operators, and in properly apportioning responsibility for the site assessment and closure activities. As noted earlier, the lack of documentation would also make it difficult for the implementing agencies to determine if a tank had been "properly closed."

EPA continues to believe, however, that a number of previously abandoned UST systems still contain regulated substances or may pose a threat to human health and the environment. As discussed in the preamble of the April 17 proposal, state UST program incident reports examined by EPA revealed approximately 300 releases reported between 1970 and 1984 that implicated abandoned UST systems. In addition, EPA expects more releases from the numerous operating USTs closed before the effective date of the notification requirements (May 8, 1986) and before the effective date of today's regulations. Because there is a reasonable probability that releases from such tanks may pose a threat to human health and the environment, the application of the closure provisions to these tanks, and in particular the site assessment requirements, may be necessary and appropriate.

EPA now believes that for tanks closed or abandoned before the effective date of today's regulations, the closure provisions should only be applied selectively under the discretionary authority of the implementing agency. These agencies are in the best position to identify abandoned tanks that may have been improperly closed, and to gauge the nature and extent of the threat posed by those tanks. They are also better able to identify the responsible owners and define the appropriate site assessment techniques. This approach is intended to enable the implementing agencies to effectively allocate their resources and only focus upon abandoned tanks that are suspected of posing potentially significant problems. This revised approach also reduces the unnecessary burden upon owners and operators of the discovered abandoned tanks by eliminating the requirement for them to revisit and conduct a site assessment at all tanks that have been previously closed, and removes the uncertainty associated with the "improper closure" standard.

Therefore, the final rule deletes the proposed requirement to conduct site assessments at all tanks improperly closed before the effective date of the final regulations. The final rule, however, requires owners and operators of abandoned tanks to comply with the closure provisions if so directed by the implementing agency when it determines there is a reasonable probability that the tank poses a potential threat to human health and the environment either now or in the future.

6. Closure Records (§ 280.74)

The recordkeeping requirements associated with closure were set forth in § 280.80(g) of the proposed rule. These requirements have been reorganized in the final rule in § 280.74 but have not been significantly changed. The principal change was the elimination of the reference to § 280.43 concerning the maintenance of release detection records. Because these requirements are in § 280.70(a) of the final rule through the reference to Subpart D, and are thereby made applicable to all out-of-service and closed UST systems, repetition of the reference is not considered necessary.

H. Anclysis of Other Significant Comments

1. Reliance on Codes Developed by Nationally Recognized Organizations

As described in the preamble to the proposed rule (52 FR 12696), the regulations required that all UST systems be designed, constructed, and protected from corrosion in accordance with a code of practice developed by a nationally recognized association or independent testing laboratory. In today's final regulations, the Agency has also included the use of industry codes for other technical sections of the rule (such as upgrading and repair of existing USTs). The Agency has noted throughout today's final technical regulations specific codes of practice that have or may be developed.

EPA did not receive any comments that were against or critical of the use of industry codes. One commenter did express the need for public input during the development of Federal technical regulations. The Agency agrees that public participation is necessary for the development of sound industry codes and practices. In fact, the Agency wants to expand the use of and reliance on industry codes in order to provide a means for improving existing methods or developing alternative methods of UST system management. EPA does not intend to adopt inadequate codes but wants to provide a flexible approach to codemaking by relying on nationally recognized organizations to develop new and improved codes and practices through a public process.

EPA is today clarifying this issue to alleviate any future misunderstandings. EPA interprets a "nationally recognized organization" to mean a technical or professional organization that has issued standards formed by the consensus of its members. The organization should ensure consideration of all relevant viewpoints and interests, including those of consumers and future or existing and potential industry participants, and the resulting standards should be widely accepted and technically sound. Thus, any code developed by an organization should be based upon a broad range of technical information, and performance crtieria should be central elements of the resulting standards. EPA believes that the following organizations, which have codes and standards referenced in today's regulations, are examples of "nationally recognized organizations":

American Petroleum Institute (API)
Association of Composite Tanks (ACT)
National Association of Corrosion Engineers (NACE)
National Fire Protection Association (NFPA)
National Leak Prevention Association (NLPA)
Petroleum Equipment Institute (PEI)
Steel Tank Institute (STI)
Underwriters Laboratory (UL)

Other similar organizations may also be considered "nationally recognized."

The final rule does not require the use of a particular issue of any code. The consensus codes are frequently revised and updated. The Agency believes that requiring the use of "the most recent edition" would cause undue confusion in the regulated community. For example, a facility may be installed in accordance with codes that are current at the time but may not have the equipment that meets the codes that are current 10 years later. EPA has concluded that the industry codes that are in effect at the date of publication of the final rule are protective of human health and the environment. The use of future editions of the codes in place of the editions that are now in effect is not required, but is encouraged as the updated codes will probably provide for newer, more effective technologies and practices. The use of past codes that have been replaced by new editions by the effective date of this rule is not allowed

because some past recommended industry practices were not fully protective of human health and the environment.

The Office of Management and Budget has discussed regulatory codes and standards (OMB Circular A119, dated October 26, 1982). OMB encourages the reliance on voluntary standards, commonly referred to as industry standards or consensus codes. The developers of such codes are called voluntary standards bodies, and are defined by OMB to include private sector, domestic, or multinational organizations—such as nonprofit organizations; industry associations, professional and technical societies, institutions, or groups; and recognized testing laboratories—that plan, develop, establish, or coordinate voluntary standards. EPA interpretation of the phrase "nationally recognized organization" is intended to encourage the development and use of voluntary standards.

2. Additional Decisionmaking Authority for Implementing Agencies

As discussed elsewhere in today's Federal Register, EPA is promulgating requirements (in Part 281) for judging the stringency of state programs to be approved to operate in lieu of "the Federal program." Under section 9004 of RCRA, the state program must contain specific program elements that are no less stringent that the corresponding Federal technical requirements. Instead of requiring a detailed line-by-line review and comparison of state requirements to Federal technical requirements, EPA is today finalizing an approach to program approval that will compare state programs to the attainment of several general Federal objectives that underlie the specific technical requirements provided in Part 280.

In support of this approach, on December 23, 1987, EPA proposed to include additional language in the technical requirements that was intended to ensure this approval process is flexibly implemented (52 FR 48647). In order to establish the Federal objective for each program element, EPA requested comment on the addition of specific language into several sections of the technical standards that would clarify the Agency's intent to allow state implementing agencies to substitute their own procedural and administrative requirements for those set forth in the Federal requirements. Such administrative requirements, while essential for direct implementation of the Federal program, do not represent the only possible approach for protection of human health and the environment, and thus are not part of the Federal objectives for defining what requirements must be "no less stringent" under section 9004 of RCRA.

Today's final technical standards include several of these wording changes proposed on December 23, 1987. A list of the specific sections and the changes that have been made in the final rules are provided in Table 2.

TABLE 2.—WORDING CHANGES IN THE FINAL RULE

Section	Additional language in the final rules
Subpart B—UST Systems Design, Construction, Installation and Notification: Section 280.20 (a)(2)(iv), (b)(2)(v).	Adding "or according to guidelines established by the implementing agency" at the end of each paragraph.
Subpart C—General Operating Requirements: Section 280.31(b)(1).	Adding "or in another reasonable timeframe established by the implementing agency" to the end of the sentence.
Subpart D—Release Detection: Section 280.45 (a), (b), (c).	Adding "or for another reasonable period of time determined by the implementing agency" after the terms "for 5 years," and "at least one year".
Subpart E—Release Reporting, Investigation, and Confirmation: Section 280.50.	Adding "or another reasonable time period specified by the implementing agency" after the term "24 hours".
Section 280.53 (a), (b).	Do.
Section 280.53 (a)(1), (b).	Adding "or another reasonable amount specified by the implementing agency" after the term "25 gallons".
Subpart F—Release Response and Corrective Action for UST Systems Containing Petroleum or Hazardous Substances: Section 280.61	Adding "or within another reasonable period of time determined by the implementing agency" after the different reporting periods of 24 hours, 20 days, 45 days, and 25 days, respectively.
Section 280.62(b)	Do.
Section 280.63(b)	Do.
Subpart G—Out-of-Service UST Systems and Closure: Section 280.71(a).	Adding "or another reasonable period of time determined by the implementing agency" after the comma in the first sentence.

In general, the Agency decided to include this additional language in the final technical requirements to ensure that different state procedural and administrative approaches could be judged no less stringent than the corresponding Federal program. As discussed in more detail elsewhere in today's Federal Register, EPA has concluded that different state procedural and administrative requirements can be used and still achieve the underlying performance objective being established today for each program element. It is the Agency's intent to allow the states a significant amount of discretion in this matter, as long as they can demonstrate that overall program performance in each program element will not be adversely impacted by their use of differing administrative practices and procedures.

Many commenters were in favor of this more flexible approach to state program approval and most recommended the additional language be provided in the final technical rules to ensure a line-by-line review is avoided. Other commenters expressed concern that additional language in the technical rules would encourage states to ignore the Federal model. Finally, one commenter opposed the flexible approach and stressed the Agency should "hold the line" in maintaining that states adhere to national regulatory decisions, even if only in procedural matters.

EPA disagrees with those commenters who opposed the addition of implementing agency administrative discretion in the technical requirements. They appeared to want to hold states to line-by-line comparisons to the Federal program as the preferred way to determine if they are no less stringent. Thus, they were generally opposed to the use of Federal objectives for purposes of state program approval, as much as to the addition of greater discretion in the technical requirements that would ensure this approach could be implemented.

As is discussed in the preamble to the state program approval regulation elsewhere in today's Federal Register, EPA has adopted the Federal objectives approach to assessing state programs for purposes of state program approval. Thus, the final technical standards rule also includes the proposed language providing additional authority to implementing agencies with respect to certain procedural or administrative requirements.

V. Relationship To Other Aspects of the UST System Program

A. Interim Prohibition

Section 9003(g) of RCRA Subtitle I sets forth requirements for tank systems installed between May 7, 1985, and 90

days after today's promulgation of final new tank performance standards. During this period, UST may be installed unless it is corrosion protected, made of noncorrodible materials, or otherwise designed and constructed to prevent releases during the operating life of the facility due to corrosion or structural failure. The tank material(s) of construction must also be compatible with the substance(s) to be stored.

The final standards for new tank systems in today's rule (as discussed in section IV. of this preamble) are designed to replace the Interim Prohibition requirements. These final performance standards address design, construction, installation, release detection, and compatibility for new tank installations. The Interim Prohibition will, however, remain in effect by regulation for those tanks that have been deferred from coverage under the technical standards in Subpart A (e.g., some sumps, and field-constructed bulk tanks).

B. Notification

On November 8, 1985, EPA published the Final Rule on Notification Requirements for Owners of Underground Storage Tanks (50 FR 46602). A form to be used for the required notification was included as part of the rulemaking.

The UST rules and standards for new tanks promulgated today are not intended to affect these established notification requirements except to add to the information required to be submitted with the notification requirements (see section IV.B.). These existing requirements have been recodified into § 280.22 of today's final rule. Owners of existing UST systems were required to notify their designated state agencies by May 8, 1986. Owners of new or replacement UST systems must notify their designated state agencies within 30 days of bringing the tank into use by submission of the November 8, 1985, Federal form, or an approved alternate state notification form.

Section 9002(a)(6) of RCRA requires that, beginning 30 days after the issuance of today's final new tank performance standards, any person who sells a tank intended to be used in a UST system must advise the tank purchaser of the owner's notification requirements. This requirement is effective 30 days after publication of the new tank performance standards that are being promulgated today. This requirement is codified in § 280.22(c) of today's rule.

C. Leaking Underground Storage Tank Trust Fund

Amendments to Subtitle I of RCRA enacted as part of the Superfund Amendments and Reauthorization Act of 1986 (SARA) provide for a Leaking Underground Storage Tank Trust Fund. The amendments (section 9003(h)) provide funds for cleanup of petroleum spills from UST systems and give EPA, and states that enter into a cooperative agreement with EPA, the authority to respond to releases of petroleum from UST systems. Almost all of the states have entered into these agreements with EPA and are now responding to petroleum releases from UST systems using Trust Fund revenues. These amendments to RCRA were necessary because no other Federal environmental program includes specific authority for response to releases of petroleum from UST systems, although releases of petroleum affecting navigable waters can be responded to under section 311 of the Clean Water Act.

Section 9003(h) provides that the Administrator may issue an order requiring corrective action prior to the promulgation of today's final corrective action regulations under Subtitle I. With the promulgation of today's requirements, the Administrator may use this same order authority, as well as the enforcement authority of section 9006, to require owners or operators to undertake corrective action.

The Leaking Underground Storage Tank Trust Fund is being financed by taxes on motor fuels to pay for response costs in a limited set of circumstances. Until the effective date of today's final technical standards December 22, 1988, the Administrator, or states under cooperative agreements, may use the Fund to pay for a particular corrective action whenever the action is necessary to protect human health and the environment. After that date, the statute provides for the use of the Fund primarily where the financial resources of the owners or operators are not sufficient to pay for the costs of corrective action, or if the owner or operator is otherwise unidentifiable, unwilling, or incapable of carrying out corrective action properly. In some cases, an identifiable and solvent owner or operator may be in compliance with all UST financial responsiblity requirements (to be discussed in a later Federal Register Notice) but lack financial resources to pay the entire cost of a response. In those cases, the Administrator or a state with a cooperative agreement is authorized to use the Fund to pay the costs that exceed the level of financial responsibility required of the owner and operator by the financial responsibility regulations.

If the owner and operator has failed to maintain the required level of financial responsibility, the Trust Fund may not be used, unless: (1) There is no solvent owner or operator; (2) there is an imminent and substantial threat to human health or the environment; or (3) there is a need to take corrective action outside the facility including the provision of alternative water supplies or relocation of residents.

Ninety days after publication of today's regulations, cleanups under the Trust Fund must be conducted in accordance with the corrective action requirements (Part 280 Subpart G).

D. Exempted Tank Studies

The regulations finalized today do not apply to certain tank systems that were exempted by statute under section 9001 of Subtitle I. Section 9009(d) and (e) of Subtitle I requires that EPA conduct a study of several of these systems and submit a report to Congress that includes recommendations as to whether these tanks should be regulated in the future. The Report to Congress will be issued later this year.

The Report to Congress will cover the following exempted tanks whose volume, including piping, is at least 10 percent belowground:

- Farm or residential tanks of 1,100 gallons or less capacity used for storing motor fuel for noncommerical purposes, and
- Tanks used for storing heating oil for consumptive use on the premises where stored.

VI. Relationship To Other Agency Programs

This section discusses the relationship of today's final rules to certain other EPA regulatory programs. This discussion is for informational purposes only.

A. CERCLA

Section 105 of the Comprehensive Environmental Response, Compensation and Liability Act of 1980 (CERCLA, or Superfund) requires development of a list of national priorities among known sites with releases and threatened releases of hazardous substances, pollutants, and contaminants. The National Contingency Plan (40 CFR Part 300) regulates development of the National Priorities List (of sites with releases) as well as appropriate responses to the most serious releases. These regulations currently apply to releases of CERCLA-designated

hazardous substances from underground storage tanks. CERCLA, however, does not apply to releases of petroleum from USTs or other sources.

Releases of hazardous substances from UST systems may require removal or remedial action responses by federal or state agencies, in accordance with 40 CFR Part 300. Some UST releases of hazardous substances are already included in the National Priorities List. When today's final rules become effective (within 90 days), owners and operators of UST systems that release hazardous substances will be subject to the corrective action provisions of the rules and, in selected cases, the removal or remedial action measures of 40 CFR Part 300. It is the responsibility of the owner and operator of a hazardous substance UST system that releases hazardous substances to consult with the implementing agency to determine the applicability of CERCLA requirements and Subtitle I release response and corrective action requirements under Subpart F.

Under sections 102 and 103 of CERCLA, EPA has promulgated regulations (40 CFR Part 302) that identify hazardous substances and quantities of releases of these hazardous substances that must be reported to the National Response Center. Those regulations contain reporting requirements for releases equal to or in excess of the established reportable quantities (RQs). Under CERCLA, owners and operators of all kinds of storage, transportation, and disposal facilities containing hazardous substances must report releases to the National Response Center. Owners and operators of USTs with releases of hazardous substances that exceed the RQs set forth in 40 CFR Part 302 will continue to be subject to those CERCLA reporting requirements.

Under today's rule, owners and operators that store hazardous substances in USTs are also required to report spill or overfill releases of these substances from USTs that exceed the RQ to the implementing agency within 24 hours, or another period specified by the implementing agency, and immediately begin containment and cleanup of the release. Owners and operators with spills or overfills of hazardous substances from USTs that are less than the reportable quantity will not be subject to the release reporting requirements although they will still be responsible to immediately contain and clean them up.

B. Hazardous Waste Tank Program

Under RCRA Subtitle C, EPA promulgated regulations for tank systems containing hazardous wastes (40 CFR Parts 264 and 265, July 14, 1986) including underground tanks. The RCRA Subtitle I rules promulgated today apply to USTs containing "regulated substances." These regulated substances include petroleum and hazardous substances defined in section 101(14) of CERCLA, *except* for hazardous wastes regulated under Subtitle C. The exclusion of hazardous wastes from the definition of regulated substance avoids most of the overlapping jurisdiction of Subtitle I and Subtitle C. An overlap in jurisdiction does exist, however, for USTs containing petroleum wastes that are subject to the provisions of RCRA 3014. This overlap is discussed in the next section.

There is also a potential overlap in jurisdiction for USTs containing mixtures of petroleum and hazardous wastes. Today's final rules resolve this potential overlap by excluding such USTs from the universe of USTs subject to today's requirements. Unless otherwise exempted, such USTs would be subject to the requirements of Subtitle C. It is intended that today's rules regulate a different set of UST systems from those subject to regulation under Subtitle C.

C. Hazardous Waste Management Regulations

Section 3001 of the Resource Conservation and Recovery Act requires EPA to identify wastes that pose a hazard to human health and the environment if improperly managed. Under the regulatory program established by Subtitle C of RCRA, EPA has developed a process that identifies and publishes lists of hazardous wastes. Generators must determine whether their waste is on one of the lists in 40 CFR Part 261, Subpart D. If a waste is not listed as a hazardous waste, waste generators are required to determine if their waste is hazardous either by testing it to determine if it exhibits any "characteristics," based on knowledge about the physical and chemical composition of the waste. In the latter case, testing of the waste is not necessary if it is believed that it would not exhibit a hazardous waste characteristic. The waste generator, however, remains responsible for making the correct determinations concerning the characteristics of reactivity, corrosivity, ignitability, and extraction procedure (EP) toxicity, as specified in 40 CFR Part 261, Subpart C.

1. Hazardous Substances

Many hazardous substances regulated by the Subtitle I tank rules are currently on EPA's hazardous waste lists of commerical chemical products at 40 CFR 261.33 (e) and (f). The products become hazardous wastes when discarded, including when spilled and then not cleaned up and used for their intended purpose. Soils, water, or other debris contaminated by these products are subject to regulation as hazardous waste (see 40 CFR 261.33(d)). A person removing such contaminated soil or debris during a cleanup is a hazardous waste generator, subject to § 261.5 or Part 262.

2. Petroleum and Petroleum-based Substances

Petroleum-contaminated soils are not an EPA-listed hazardous waste. Based on its physical and chemical nature, petroleum-contaminated soil would not exhibit the hazardous characteristics of corrosivity or reactivity under 40 CFR Part 261. Some state UST programs have reported to the Agency that they require the use of the EPA tests for ignitability and EP toxicity to assist in making decisions about whether to manage the petroleum-contaminated soils on- or off-site. Other states have simply declared that the soils are not a hazardous waste and, therefore, do not require testing or management as a hazardous waste. Other states require management of petroleum-contaminated soils as a "special waste" that must receive special handling to control environmental and human health risks believed to be associated with the volatile organic chemical emissions known to come from such soils.

Although some states require the use of the EPA tests, petroleum-contaminated soils do not satisfy the EPA criteria for an ignitable hazardous waste. A substance is classified as a hazardous waste if it exhibits the characteristic of ignitability according to one of the following four criteria (40 CFR 261.21) as determined by using an ASTM or Administrator-approved testing procedures. The substance must be: (1) A liquid containing less than or equal to 24 percent alcohol having a flashpoint less than 140° F; (2) a nonliquid, but capable under standard temperature and pressure of causing fire through friction, absorption of moisture, or spontaneous chemical changes which burns so vigorously and persistently that it creates a hazard; (3) an ignitable compressed gas, as defined in 49 CFR 173.300; or (4) an oxidizer as defined in 40 CFR 173.151. Gasoline-contaminated soils do not satisfy criteria (1), (3), or (4). They do satisfy the nonliquid requirement of criterion (2); however, the Agency has concluded that they are

very unlikely to ever be capable of causing fire by friction, absorption of moisture, or spontaneous chemical changes. These soils, therefore, should not be a hazardous waste under Subtitle C of RCRA due to ignitability.

Several states contacted by EPA reported that they have conducted thousands of EP toxicity tests on petroleum-contaminated soils and they have never exhibited the characteristic of EP toxicity at numerous sites nationwide where soils were contaminated by both leaded and unleaded gasolines. This result is expected because the extraction procedure is designed to identify individual wastes that are hazardous due to their potential to leach significant concentrations of eight specific metals, four insecticides, and two herbicides in a municipal landfill scenario. When subjected to the EP toxicity test, the only constituent of concern for soils contaminated by petroleum is lead. The extremely high adsorption coefficient of lead, however, indicates that such soils are unlikely to ever exhibit the characteristic of EP toxicity.

In summary, the evidence collected by or reported to the Agency to-date indicates it is very unlikely that petroleum-contaminated soils will be found to exhibit any of the characteristics of hazardous waste as currently defined by EPA regulations. However, EPA is also aware that there are potential threats that need to be considered in the management of petroleum-contaminated soils. For example, petroleum-contaminated soils (particularly motor fuels) can contribute significant amounts of volatile compounds to the air or be the source of dissolved contaminants (such as benzene) in ground-water resources. Today's final regulations leave the off-site management of these concerns to existing state and local requirements. EPA believes there are several ways to properly manage petroleum-contaminated soils that are not hazardous wastes, including the following approaches that are already being used in various states:

- Define petroleum-contaminated soils as a non-hazardous waste that requires disposal into permitted solid waste facilities.
- Define it as a special waste that requires special handling (such as land spreading, heat treating, or disposal in designated fill areas) that is tailored to remove the threats posed by the volatile constituents of the petroleum.
- Define petroleum-contaminated soils as a hazardous waste that must be treated or disposed of under the hazardous waste standards.

EPA intends to study this technical issue further and provide more information to the public and the implementing agencies concerning alternative ways to manage petroleum-contaminated soils when they are managed on-site or removed off-site. This information may include, for example, a description of different test methods that could be used to characterize petroleum-contaminated soils in a more meaningful fashion than present methods. EPA is currently investigating techniques to measure and assess the condition of petroleum-contaminated soils, and handling and treatment alternatives that can be used to properly manage the potential risks they pose to human health and the environment.

Finally, EPA notes that under proposed revisions to the toxicity characteristic under the Agency's hazardous waste regulations (40 CFR 261.21), benzene and a number of other compounds would be added to those constituents that, when measured in waste leachate, will determine whether a waste exhibits a hazardous waste characteristic. (See 51 FR 21648; June 13, 1986.) When these rule revisions are issued in final form, a large amount of petroleum-contaminated soils that are currently considered nonhazardous may have to be managed as hazardous waste. For example, all petroleum-saturated soils may be characterized as a hazardous waste under the proposed revisions. EPA is unsure of the impacts of this proposed rule change at this time, and in fact recently requested additional public comments on the levels for benzene and other constituents. (See 53 FR 18024; May 19, 1988.) However, the public comment period is closed on this issue. The Agency will provide further guidance on this issue at a later date.

D. Used Oil Regulations

Underground tanks storing used oil (e.g., automobile and truck used crankcase oil) are under the jurisdiction of Subtitle I. Pursuant to section 9001(2)(B) of RCRA, underground tanks containing "petroleum, including crude oil or any fraction thereof which is liquid at standard conditions of temperature and pressure * * *" are within the scope of Subtitle I. Since used oil is primarily composed of petroleum, although it may contain contaminants due to use of the oil, it is subject to Subtitle I requirements. Owners and operators of UST systems containing used oil were required to notify designated state agencies of the presence of such tanks by May 8, 1986. Owners and operators of newly installed used oil UST systems have also been subject to the requirements of the Interim Prohibition, which has been in effect since May 8, 1985.

As discussed above, however, today's regulations exclude any tanks regulated under Subtitle C of RCRA. Under Subtitle C, EPA has the authority to regulate recycled oil, and to regulate used oil that is disposed of under Subtitle C if such oil is identified or listed as a hazardous waste. Under the authority of Subtitle C of RCRA, EPA proposed to list used oil as hazardous waste (50 FR 49269–49270, November 29, 1985) and has proposed standards for recycled oil (50 FR 49250–49258, November 29, 1985). Since those publications in the Federal Register, several important decisions in terms of these proposed rulemakings have been made, namely:

(1) Storage of used oil (even when recycled) will be regulated, and

(2) Recycled oil will *not* be listed as a hazardous waste (51 FR 41900, November 19, 1986).

The storage of used oil, however, is not currently regulated as a hazardous waste under Subtitle C. Unless and until the Agency regulates the storage of used oil as a hazardous waste under Subtitle C, it will be subject to Subtitle I. Accordingly, the Agency is today including application of the technical requirements to used oil UST systems. This is discussed in further detail in section IV.A.

E. SPCC

Under section 311 of the Federal Water Pollution Control Act, EPA has promulgated regulations for the prevention of oil spills into navigable waters. These rules (40 CFR Part 112) known as the Spill Prevention Control and Countermeasure (SPCC) regulations are intended to prevent and contain releases of oil into surface waters which are navigable.

Comparatively few UST systems are subject to SPCC regulations. Only those tanks of greater than 42,000 gallons capacity that are located near navigable waters of the U.S. or adjoining shorelines may be affected. UST systems which, due to their location, could reasonably be expected to discharge oil into or upon navigable waters of the United States or adjoining shorelines and which have a storage capacity greater than 42,000 gallons are subject to both today's rules and the SPCC rules.

F. DOE High-Level Radioactive Waste Program

Under the Atomic Energy Act of 1954 (42 U.S.C. 2201 *et seq.*), the U.S.

Department of Energy (DOE) has promulgated rules for the management of high-level radioactive waste resulting from atomic energy defense activity. DOE Orders 5480.1, 5480.2, and 5820.2 regulate the underground storage of these wastes, including corrective actions in the event of a release.

The UST rules include the storage of radioactive waste because any radionuclide is a "hazardous substance" under CERCLA and thus a regulated substance under Subtitle I. However, in view of the differences in high-level radioactive waste from other RCRA Subtitle I regulated substances and the much larger tanks storing this waste, EPA is today deferring regulatory action on these DOE radioactive waste facilities. Until a determination is made as to whether, and how, the UST rules should apply to DOE facilities storing high-level radioactive wastes, today's UST requirements, except corrective action and the Interim Prohibition requirements, do not apply to these facilities. More details are provided on this in section IV.A.

VII. Economic and Regulatory Impacts

Section VII.A. discusses the Regulatory Impact Analysis of the final rule required by Executive Order 12291. Section VII.B. discusses the analysis of the effects of the final rule on small businesses required by the Regulatory Flexibility Act. Section VII.C. addresses requirements under the Paperwork Reduction Act. (A full draft of the Regulatory Impact Analysis for the final rule is available as part of the background documents supporting this rulemaking.)

A. Regulatory Impact Analysis

1. Executive Order 12291

Executive Order 12291 (46 FR 13193, February 19, 1981) requires regulatory agencies to conduct a Regulatory Impact Analysis (RIA) for any major rule. EPA has conducted an RIA to assess the regulatory impacts of the technical standards rule for USTs based on the guidelines contained in the Office of Management and Budget's "Interim Regulatory Impact Analysis Guidance" and EPA's "Guidelines for Performing Regulatory Impact Analysis." The objective of the analysis is to examine the anticipated costs, benefits, and impacts of the final rule rather than to select a regulatory option. Based on the results of the analysis, the Agency has concluded that the technical standards regulations being promulgated today represent a major rule that produces significant net benefits to society.

As described in today's preamble, these technical standards pertain to tank system design, construction, and installation, leak detection, recordkeeping, reporting, closure, and corrective action. For the proposed rule (52 FR 12761–12769), EPA conducted an RIA to compare several regulatory alternatives. Each of these alternatives is discussed in detail in the "Regulatory Impact Analysis for Proposed Technical Standards for Underground Storage Tanks" (April 1987). (This RIA for the proposed rule is contained in Appendix B of the RIA for the final rule.) The RIA for the final rule does not consider various options. Instead, it concentrates on the impacts of the provisions of the final rule (see sections III. and IV. of today's preamble for a full description of the requirements of the final rule.)

The final rule refines the proposed rule (April 17, 1987) by phasing in requirements for release detection over a period of 5 years for existing tanks (based on the age of the tank) and by establishing more stringent requirements for pressurized piping. Most of the other requirements in the final rule pertaining to corrosion protection and release detection are the same as in the proposed rule.

2. Costs

Compliance with the rule's requirements for release detection, system inspections and upgrading, and corrective action will require large expenditures by most UST owners and operators. In addition, the large population of USTs means that the total costs for all USTs will be substantial from the standpoint of the economy as a whole.

Table 3, column 2, displays the costs of the final rule for the entire UST population, by category of costs. These cost estimates represent costs calculated using the UST Model, a model developed by the Agency to simulate the release and transport of petroleum products. These estimates assume a total of 1.7 million USTs and a total of 30 years of costs after promulgation of the rule, discounted at a rate of 3 percent annually. Based on EPA's analysis and assumptions, the estimated cost of the final rule is expected to be approximately $69 billion over a period of 30 years, or $3.6 billion per year (discounted at a rate of 3 percent).

TABLE 3.—COSTS UNDER THE BASE CASE AND FINAL RULE

Cost component	Total cost, all USTs		Increment cost	
	Base case (millions)	Final rule (millions)	Total (millions)	Per UST
Component repair replacement, upgrade	$19,890	$32,300	$12,410	$7,300
Leak detection and testing	440	4,980	4,540	2,670
Corrective action in response to releases	[1] 0	31,970	31,970	18,800
Total	20,330	69,250	48,920	28,770

Source: UST Model runs, April 1988.
[1] No cost is ascribed here because no corrective action is required in the base case.

In order to evaluate the incremental costs of the final rule, EPA estimated the costs that would be incurred by UST owners and operators in the absence of any further regulations. These costs are presented in column 1 of Table 3 as base case cost. Subtracting the base case costs from the costs under the final rule yields the incremental cost of the final rule, shown by cost category in Table 3, column 3. This incremental cost is expected to be approximately $48 billion over 30 years, or $2.5 billion on an annual basis (discounted at an annual rate of 3 percent). The administrative costs of implementing the final rule are not included in this analysis.

3. Benefits

The final rule's requirements for leak detection and prevention and corrective action will provide society with a variety of benefits. The benefits are defined as reductions in damages under the rule in comparison to the base case. Two kinds of damages are considered in the RIA: Those that occur before a

release is detected, such as contamination of private and public wells; and those that occur after a release is detected, such as contamination of soil and ground water.

The pre-detection damages are $2.1 billion under the final rule, and $1.8 billion in the base case. The incremental benefits of regulation resulting from this decrease in pre-detection damages are therefore $2.7 billion. The post-detection damages are estimated to be $52.6 billion under the base case, and negligible under the final rule. (Under the final rule, corrective actions must be performed as soon as a release is detected which accounts for this drastic reduction in post-detection costs.) The incremental benefits of regulation resulting from a decrease in post-detection damages are therefore $52.8 billion. The total incremental benefits of the rule, including the benefits from reduction in both pre- and post-detection damages, are $55.5 billion ($2.7 billion due to reduction of pre-detection damages and $52.8 billion due to reduction of post-detection damages). The yield in benefit for each UST is about $31,000.

EPA believes that, in addition to the benefits summarized above, many additional benefits of release detection and prevention cannot be expressed quantitatively or in purely monetary terms. Examples of these important benefits include the prevention of added risks to human health, the value of preventing damage to the ability of streams to support life, and the basic value of preventing contamination of ground-water resources whether or not they are currently being used.

In an attempt to provide some measure of these benefits, EPA has quantified the health benefits of the release detection, prevention, and corrective action portion of the final rule, but has expressed the benefits in terms of cancer cases avoided and the reduction in numbers of USTs posing cancer risks in excess of a specified threshold (Table 4). Of the two scenarios shown in Table 4, one scenario assumes that people will not use water that smells or tastes badly. The other scenario assumes that people will use water whether it seems contaminated or not.

TABLE 4.—REDUCTIONS IN HEALTH RISKS DUE TO RELEASE PREVENTION AND DETECTION IN THE FINAL RULE

Type of benefit	Assuming taste and odor threshold limits exposure	Assuming no exposure limitation
Reduction in population risk (total cases of cancer avoided).	20 cases	87 cases.
Reduction in numbers of USTs posing risks of cancer as high as one chance in 10,000.	8,371 USTs	13,300 USTs.

Source: UST Model runs, April 1988.

4. Cost Effectiveness of the Final Rule

A comparison of the incremental costs of the final rule to its incremental benefits is shown in Figure 6. The figure shows the incremental costs of the final rule to be $48.9 billion, which include repair, system upgrading and replacement, release detection, and corrective action for the entire population of 1.7 million USTs. In contrast, the incremental benefits of the rule are estimated to be $55.5 billion. These benefits consist largely of reductions in damages occurring after releases are detected, but also include reductions in well and vapor damages and lost product occurring before the detection of releases. By subtracting costs from benefits, the net dollar benefits of the final rule over the next 30 years are estimated to have a present value of $6.6 billion, or $4,000 per UST. In addition to the benefits measured in dollar terms, the rule also significantly reduces damages to human health and the environment.

BILLING CODE 6560-50-M

FIGURE 6

Net Costs and Benefits

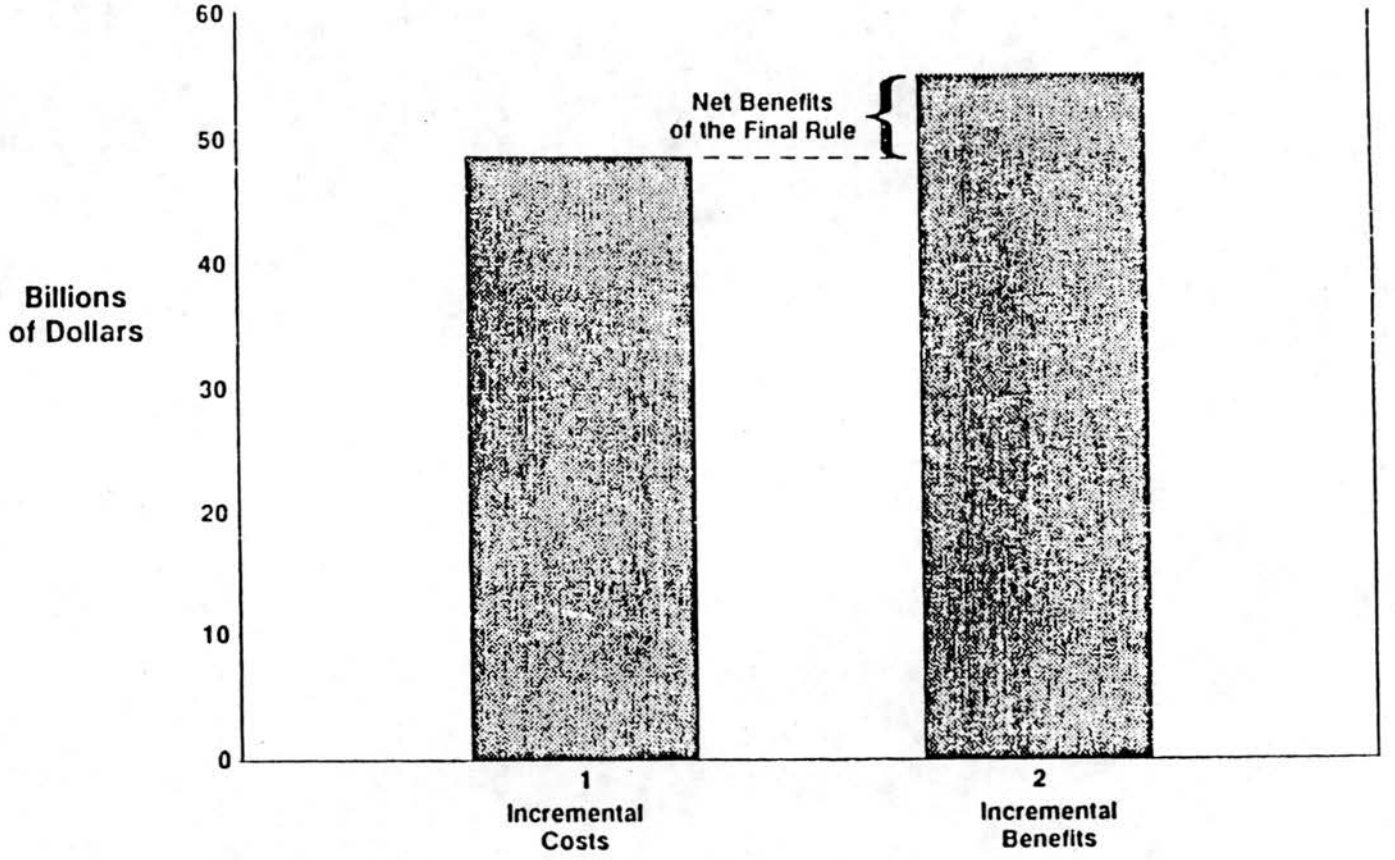

Source: UST Model runs, April 1988.

BILLING CODE 6560-50-C

5. Economic Impacts on Existing Facilities

An economic impact analysis was performed for the general industry and retail marketing sectors having petroleum USTs and for firms having hazardous substance USTs. The results of this analysis indicate that firms in the retail motor fuel marketing sector would be most adversely affected, for several reasons: they have a greater number of small firms that are more vulnerable to significant regulatory expenditures; regulatory expenditures in this sector are likely to be greater because motor fuel retail outlets generally have the greatest number of USTs per outlet; and firms in the retail motor fuel marketing sector do not have the option of closing their USTs and using alternative storage methods. The RIA reaches the following conclusions:

- By year ten, 43 percent more small firms are projected to close under the final rule than in the base case.
- Most economic impacts of the final rule occur in the first 5 years after its imposition.
- Most closures of existing outlets are caused by corrective action expenses.
- Were corrective action to be performed in the base case as well as under the final rule, the model predicts that a higher percentage of outlets would survive under the final rule than in the base case.

6. Integration of Technical Standards and Financial Responsibility Rules

EPA prepared separate RIAs for the proposed technical standards and financial responsibility rules in order to estimate the costs and economic impacts of each proposed rule. As many commenters pointed out, a major weakness of this approach was that the two RIAs could not easily be used to assess the combined impacts of the proposed technical standards and financial responsibility rules to construct an "after regulation" picture of the regulated community. Commenters also noted that certain indirect costs that would be imposed on the regulated community were not included in either RIA. They explained that in order to buy insurance to satisfy the financial responsibility requirements, UST owners and operators would have to upgrade their USTs by installing release detection systems sooner than required by the technical standards rule.

In response to these comments, EPA has revised its approach in preparing the RIAs for the final rules, so that the two RIAs now perform the following functions:

- Account for the indirect costs of having to upgrade tank systems sooner to procure financial assurance; and
- Estimate the combined costs and economic impacts of both sets of requirements.

The RIA for the financial responsibility rule assumes the technical standards rule in its base case in order to estimate its costs and economic impacts. The costs incurred in upgrading, replacing, retrofitting, and corrective action are attributed to the technical standards rule. Costs incurred to upgrade sooner than required by the technical standards rule in order to obtain financial assurance are attributed to the financial responsibility rule. By using the technical standards rule as the base case and computing the incremental costs of the financial responsibility rule, the overall costs to the regulated community can be estimated properly.

B. Regulatory Flexibility Act

Under the Regulatory Flexibility Act of 1980 (5 U.S.C. 601 et seq.), agencies publishing a proposed or final rule must prepare and make available for comment a Regulatory Flexibility Analysis that describes the potential impact of the rule on small entities (i.e., small business, small organizations, and small government jurisdictions). The purpose of the Regulatory Flexibility Act is to ensure that regulations do not impose unnecessary costs or other burdens on such entities. As part of its RIA, EPA has examined the potential impact of today's rule on small entities and has concluded that the rule will have a significant impact on a substantial number of small entities, as described below:

1. Small Entities Potentially Affected by the Rule

The Agency divided the businesses potentially affected by the rule into three categories: Firms engaged in retail motor fuel marketing (e.g., gasoline service stations), firms engaged in other businesses (general industry category), and local government entities. EPA focused the emphasis of the Regulatory Flexibility Analysis on the retail motor fuel marketing sector because (1) all firms in this sector *must* store their product in underground storage tanks; (2) about three-quarters of all retail motor fuel outlets are owned or operated by small businesses; and (3) the data base for this sector is reasonably accurate and will capture the most severe small-business impacts likely to occur as a result of the rule.

a. *Small Businesses in the Retail Motor Fuel Marketing Sector.* For this Regulatory Flexibility Analysis, small businesses in the retail motor fuel marketing segment are defined as firms with less than $4.6 million in annual sales and include all firms with only one or two outlets. Firms with $4.6 million in sales will typically have approximately $500,000 in assets and a net worth of about $250,000. EPA estimates that in 1984, small businesses either owned or operated 72 percent of the 193,000 retail motor fuel outlets in the United States.

To examine the rule's potential economic impact on small businesses, EPA estimated the rates at which existing firms in the retail motor fuel marketing sector would leave the industry with and without regulations. For the purposes of this analysis, EPA estimates that these outlets have historically tended to exit the industry at a rate of 3 to 4 percent per year. If releases occur at the level estimated by the RIA and no revenue increases are possible for small businesses, this rate would increase to 6.2 percent per year, assuming average corrective action costs.

b. *Small Businesses in the General Industry Sector.* An estimated 24 to 41 percent of all USTs in the general industry sector are owned by firms with less than $1 million in assets. A typical small firm in this segment was assumed to have $300,000 in assets and net profits of $21,000 a year. Overall, these firms represent about 12 percent of all UST-owning firms in the general industry sector.

The cost of corrective action for non-plume release (i.e., no ground-water contamination) would leave a small general industry firm in severe financial distress, and the cost of corrective action for a plume release (i.e., contamination of ground water) would lead to the failure of the firm. Replacing a tank would cause a small general industry firm a temporary financial hardship; however, this hardship would not seriously threaten the survival of the firm.

c. *Small Local Government Entities.* Local government entities of all sizes own USTs. In 1982, the typical municipality with a population less than 50,000 had general revenues of $1.7 million. The costs of replacing even a single UST would represent 2 percent of the revenue of such a municipality, a significant expenditure that would have to be taken into account when planning. A corrective action that required cleaning up a dispersed plume would represent more than 13 percent of the general revenues of such a community, a sum that would probably cause severe financial distress.

In 1982, of the 38,886 local governments classified as counties, municipalities, and townships, 37,581 (approximately 97 percent) had populations of 50,000 or less. Almost all UST-owning local governments would, therefore, be subject to potentially substantial economic impacts under the technical standards rule if an UST release occurred.

C. Paperwork Reduction Act

The information collection requirements in this rule have been approved by the Office of Management and Budget (OMB) under the Paperwork Reduction Act (44 U.S.C. 3501 *et seq.*) and have been assigned OMB Control Number 2050–0068. Reporting and recordkeeping burden on the public for this collection is estimated at 8,265,220 hours for the 1,750,000 respondents, with an average of 4 hours per response. These burden estimates include all aspects of the collection effort and may include time for reviewing instructions, searching existing data sources, gathering and maintaining the data needed, and completing and reviewing the collection of information.

If you wish to submit comments regarding any aspect of this collection of information, including suggestions for reducing the burden, or if you would like a copy of the information collection request (please reference ICR #1360), contact Rick Westlund, Information Policy Branch, PM-223, U.S. Environmental Protection Agency, 401 M Street SW., Washington, DC 20460 (202–382–2745); and Marcus Peacock, Office of Information and Regulatory Affairs, Office of Management and Budget, Washington, DC 20503.

List of Subjects in 40 CFR Part 280

Administration practice and procedures, Confidential business information, Ground water, Hazardous materials, Reporting and recordkeeping requirements, Underground storage tanks, Water pollution control, Water supply.

September 8, 1988.

Lee Thomas,

Administrator.

For the reasons set out in the Preamble, Part 280 of Title 40 of the Code of Federal Regulations is revised to read as follows:

PART 280—TECHNICAL STANDARDS AND CORRECTIVE ACTION REQUIREMENTS FOR OWNERS AND OPERATORS OF UNDERGROUND STORAGE TANKS (UST)

Subpart A—Program Scope and Interim Prohibition

Sec.

280.10 Applicability.
280.11 Interim prohibition for deferred UST systems.
280.12 Definitions.

Subpart B—UST Systems: Design, Construction, Installation and Notification

280.20 Performance standards for new UST systems.
280.21 Upgrading of existing UST systems.
280.22 Notification requirements.

Subpart C—General Operating Requirements

280.30 Spill and overfill control.
280.31 Operation and maintenance of corrosion protection.
280.32 Compatibility.
280.33 Repairs allowed.
280.34 Reporting and recordkeeping.

Subpart D—Release Detection

280.40 General requirements for all UST systems.
280.41 Requirements for petroleum UST systems.
280.42 Requirements for hazardous substance UST systems.
280.43 Methods of release detection for tanks.
280.44 Methods of release detection for piping.
280.45 Release detection recordkeeping.

Subpart E—Release Reporting, Investigation, and Confirmation

280.50 Reporting of suspected releases.
280.51 Investigation due to off-site impacts.
280.52 Release investigation and confirmation steps.
280.53 Reporting and cleanup of spills and overfills.

Subpart F—Release Response and Corrective Action for UST Systems Containing Petroleum or Hazardous Substances

280.60 General.
280.61 Initial response.
280.62 Initial abatement measures and site check.
280.63 Initial site characterization.
280.64 Free product removal.
280.65 Investigations for soil and ground-water cleanup.
280.66 Corrective action plan.
280.67 Public participation.

Subpart G—Out-of-Service UST Systems and Closure

280.70 Temporary closure.
280.71 Permanent closure and changes-in-service.
280.72 Assessing the site at closure or change-in-service.
280.73 Applicability to previously closed UST systems.
280.74 Closure records.
Appendix I—Notification for Underground Storage Tanks (Form).
Appendix II—List of Agencies Designated to Receive Notifications.
Appendix III—Statement for Shipping Tickets and Invoices.

Authority: 42 U.S.C. 6912, 6991, 6991(a), 6991(b), 6991(c), 6991(d), 6991(e), 6991(f), 6991(h).

Subpart A—Program Scope and Interim Prohibition

§ 280.10 Applicability.

(a) The requirements of this part apply to all owners and operators of an UST system as defined in § 280.12 except as otherwise provided in paragraphs (b), (c), and (d) of this section. Any UST system listed in paragraph (c) of this section must meet the requirements of § 280.11.

(b) The following UST systems are excluded from the requirements of this part:

(1) Any UST system holding hazardous wastes listed or identified under Subtitle C of the Solid Waste Disposal Act, or a mixture of such hazardous waste and other regulated substances.

(2) Any wastewater treatment tank system that is part of a wastewater

Exhibit 3: Statement of Need and Reasonableness

UNDERGROUND STORAGE TANK STUDY GROUP

REPORT TO COMMISSIONER PERPICH

DEPARTMENT OF PUBLIC SERVICE

INTERAGENCY STUDY GROUP REPORT
UNDERGROUND STORAGE TANK ISSUES

TABLE OF CONTENTS **page**

Purpose of this Report 1

Background on EPA Underground Storage Tank Regulations 2

EPA Technical Requirements 2

EPA Financial Responsibility Requirements 3

Compliance - What are the Problems? 4

Compliance Costs - Technical Requirements 4 - 5

Compliance Costs - Financial Responsibility Insurance Costs and Availability 6

Businesses Affected by the Regulations 6 - 8

Gasoline Availability Problems in Greater Minnesota 8
Map - Retail Outlets and Chance of Survival 10
Map - Retail Outlets and Storage Tanks 11

Economic Trends in Petroleum Marketing 12 - 14

Employment Impact 15

Financial Loss, Small Business 15

Impact of EPA Regulations on Other Businesses 16

What has State Government Done to Help? 17

EXECUTIVE SUMMARY of Information Presented on Pages 1 through 17 **18**

Options - Can State Government Help Businesses Meet the EPA Requirements? **19 - 21**

Glossary of Terms Used in this Report 22

Contributors to the Report 23

Associations and individuals invited to comment 24

EXECUTIVE SUMMARY of responses received from industry and associations. **25**

Comments Received 26 -

PURPOSE OF THIS REPORT

In September and October of 1988, the United States Environmental Protection Agency published regulations that established strict new requirements for the design, maintenance and monitoring of underground storage tanks. The regulations also created financial responsibility requirements for cleaning up leaks from the tanks. Over the next few years, these regulations will have a marked impact on Minnesota's petroleum marketing industry.

This report is intended to be an information source for State Legislators and state government agencies. It will also provide valuable information for gasoline retailers and other interested citizens.

Although the scope of the EPA regulations is very broad, covering all underground petroleum storage tanks, this report will deal primarily with the regulatory impact on retail gasoline businesses in Greater Minnesota. Specifically, the report will:

- Explain the EPA technical requirements, financial responsibility requirements and compliance deadlines for underground storage tanks;
- Explain the impact of the EPA regulations on gasoline retailers;
- Estimate the types and numbers of gasoline retailers that will be impacted by the regulations. Relate the estimate to current economic and market trends in Greater Minnesota;
- Point out the potential problem areas in Greater Minnesota where consumers may have to drive greater distances to purchase gasoline;
- Outline the far reaching effects of the EPA regulations on non-marketing businesses and political subdivisions.
- List the actions already taken by, and the options available to, state government to help limit any detrimental effects from the EPA regulations in Greater Minnesota;
- Include comments from interested groups, companies and associations.

BACKGROUND

In 1984, in response to the growing national problem of soil and ground water pollution caused by petroleum products leaking from underground storage tanks, the United States Congress amended the Resource Conservation and Recovery Act, requiring the Environmental Protection Agency to develop regulations to protect human health and the environment from pollution caused by leaking underground storage tanks.

The EPA developed regulations, contained in Title 40, Code of Federal Regulations, Part 280, to ensure that four basic goals would be met:

- Prevent leaks and spills;
- Find and correct existing leaks;
- Make sure that owners and operators can pay to clean up contamination caused by leaks;
- Make sure each state has a program at least as strict as the federal regulations.

TECHNICAL REQUIREMENTS

In September of 1988, the EPA published its final rule containing technical requirements for underground storage tanks. The requirements apply only to underground tanks used to store petroleum products or certain hazardous chemicals.

In general, the businesses that must meet the technical requirements are service stations, convenience stores, country stores, resorts and government and private automobile, truck and school bus fleet operations that operate underground petroleum storage tanks. The rules exempt farm, residential, septic, flow-through and overfill tanks, above ground tanks and tanks under 110 gallons capacity.

New tanks, installed after December of 1988, must be properly installed and equipped with spill/overfill protection, corrosion protection and leak detection systems.

Old tanks, installed prior to December of 1988, must be upgraded with spill/overfill protection and corrosion protection (for steel tanks) by December of 1998. Owners must also install leak detection systems on a schedule based on the age of the tanks.

LEAK DETECTION INSTALLATION SCHEDULE:

Tanks Installed...	Must Have Leak Detection by December of...
before 1965 or unknown	1989
1965 - 1969	1990
1970 - 1974	1991
1975 - 1979	1992
1980 - Dec. 1988	1993

FINANCIAL RESPONSIBILITY REQUIREMENTS

In October of 1988, The EPA published its financial responsibility regulations for underground petroleum storage tanks.

Owners or operators of regulated underground storage tanks must demonstrate their ability to pay for clean up costs if a leak or spill occurs. They may demonstrate "financial responsibility" or "coverage" by obtaining insurance, a corporate guarantee, surety bond, or letter of credit, by establishing a trust fund or by participating in a state fund to pay for clean up costs.

The required amounts of coverage per occurrence and annual aggregate coverage vary depending on the type of business, the number of tanks operated and the monthly throughput of the facility. Petroleum marketers must meet different requirements than non-marketers. Federal and state government agencies are exempt. Local government units must comply. The amounts of coverage required and the compliance dates are shown in the following charts:

COVERAGE REQUIREMENTS:

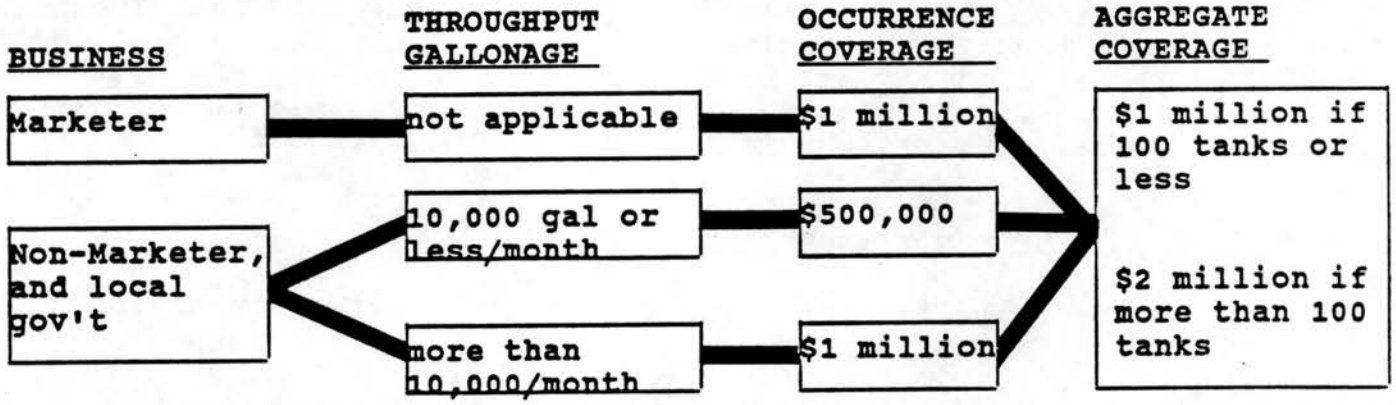

COMPLIANCE DATES:

COMPLIANCE DATE	MARKETING FIRMS WITH:	NON-MARKETING FIRMS
July, 1988	1,000 or more USTs	net worth of $20 million or more
October, 1989	100 to 999 USTs	
April, 1990	13 to 99 USTs	
October, 1990	1 to 12 USTs	net worth less than $20 million and local gov't

COMPLIANCE - WHAT ARE THE PROBLEMS?

The EPA regulations will affect almost all businesses and government agencies that operate underground petroleum storage tanks. Considering that all regulated organizations must meet the same basic requirements, and considering that there is a substantial cost associated with compliance, it is expected that **problems will arise** in the segment of the petroleum marketing industry **where the cost of compliance approaches, or is greater than, the ability to pay.**

Compliance involves two separate cost factors:

1) The cost of upgrading tanks and installing equipment to meet the technical requirements;
2) The cost of insuring against leaks and spills to meet the financial responsibility requirements.

Many big petroleum marketers and convenience store chains have newer facilities and a large enough income from gasoline sales that they will meet, or have already met, the technical requirements for their tanks. Big companies will also self-insure to comply with the financial responsibility requirements.

Hardest hit, it appears, will be the small gas stations, country stores and resorts. In many cases, they have old, small capacity storage tanks and relatively small sales volumes. Annual income from gasoline sales may not be large enough to justify the cost of improving their tanks. Even worse, it is nearly impossible to purchase insurance coverage for tanks that are more than 10 years old.

THE COST OF COMPLIANCE

The following charts illustrate the cost of complying with EPA technical requirements. The first chart gives a comparison of storage tank installation costs before and after enactment of the EPA technical requirements. The second chart (next page) shows the cost range, based on information from local petroleum equipment companies, for installing a "state of the art" facility with small storage tanks designed to meet all EPA technical requirements.

INSTALLATION COST COMPARISON

OPERATION	COST UNDER EPA RULES	COST FOR OLD METHODS	DIFFERENCE
Install three 10,000 gallon tanks	$60,000	$46,000	$14,000
Install three 5,000 gallon tanks	$35,000	$27,000	$ 8,000

Source: Pollution Control Agency, Spring 1989

THE COST OF COMPLIANCE (continued)

INSTALLATION COSTS - SMALL SERVICE STATION

ITEM	550 gal. tank	1,000 gal tank	2,000 gal tank
Tank Purchase & Installation	3,848 - 4,337	4,076 - 7,000	6,039 - 14,000
Pipe Run & Spill/Overfill Protection	1,745	1,745	1,745
Old Tank Removal	2,000 - 4,000	2,000 - 4,000	2,000 - 4,000
TOTAL:	**$ 7,593 - 10,082**	**$ 7,821 - 12,745**	**$ 9,784 - 19,745**
Add for Fiberglass	$ 489	$ 502	$ 494
Add for Tank Gauge/Printer	$3,000 - 4,500	$ 3,000 - 4,500	$ 3,000 - 4,500

Source: Pollution Control Agency, Fall 1989

In comparing the two charts above, it must be noted that the estimates in the first chart, from spring of 1989, do not include the cost of removing, cleaning and scrapping old tanks. The second chart clearly demonstrates that the cost of installing new tanks is substantial, even for a very small storage capacity. The "tank gauge" item at the bottom of the second chart is an automated monitoring system that represents one of the optional methods of meeting the EPA regulations.

These charts do not include any cleanup costs that would be incurred if soil contamination were discovered during excavation.

Typically, newer retail marketers install 10,000 or 12,000 gallon storage tanks to take advantage of cost savings realized by ordering full 8,000 gallon transport deliveries. Most newer gasoline stations and convenience stores have installed three or more large tanks. It is standard practice for two Minnesota convenience store chains to operate only four to eight pumps, dispensing fuel from three 12,000 gallon storage tanks at each of their locations.

Older storage tanks can be upgraded with corrosion protection, leak detection systems and spill/overfill protection. **Upgrading three small storage tanks costs approximately $19,000.** Most petroleum equipment companies will not attempt to add protection equipment to any tank that is more than 10 years old.

INSURANCE COSTS

All underground storage tank operators, except state and federal government agencies, must demonstrate financial responsibility for cleanup costs due to leaks and spills. The most common methods of demonstrating this coverage are to self-insure or purchase pollution liability insurance. Self insurance may not be a viable option for many small retailers.

Annual premiums for pollution liability insurance **range from $6,000 to $12,000** for an individual facility that operates underground storage tanks.

As of October of 1989, insurance companies have indicated that they will only insure facilities where the owner can prove that the storage tanks are not leaking and that the soil is not contaminated. There is no specification on the age of the tanks.

Insurance companies cannot afford to cover storage tanks in unknown condition. This would, in some cases, amount to insuring a 100% risk.

Essentially, this means that the owner must comply with the EPA technical requirements before insurance can be purchased. Effectively, insurance considerations have compressed the EPA's 10 year technical requirement compliance schedule into a two year schedule (October 1988 to October 1990).

The chart on page 2 outlines the normal EPA compliance schedule for the technical requirements. On page 3, the chart at the bottom of the page outlines the compliance dates for the financial requirements. **The chart on page 3, should be considered the "real world" compliance schedule for both the financial and technical requirements.**

BUSINESSES THAT WILL BE AFFECTED

Will small retailers remain in the gasoline marketing business after the EPA regulations become effective? Many will not.

The model on the following page represents a typical unit of a gasoline/convenience store chain that is large enough to justify the cost of complying with the technical and financial responsibility requirements. Businesses smaller than this model business will have difficulty justifying the cost of the EPA mandated improvements and insurance.

Many convenience stores that are part of large multi-store chains are already in compliance with the technical requirements. Most stores built within the last 5 years were designed to meet EPA requirements. Independent convenience stores, particularly stores converted from old gas stations, may find that it is too costly to update old equipment to meet the EPA requirements.

COMPLIANCE MODEL - VIABLE GASOLINE RETAILER

PHYSICAL CHARACTERISTICS	FINANCIAL CHARACTERISTICS
3 Storage tanks	Monthly sales = 50,000 gallons
30,000 gals total capacity	Margin = $0.10 per gallon
4 to 12 gasoline pumps	Annual gross profit from gasoline sales = $60,000
Source: Department of Public Service	

After the EPA compliance dates, the businesses most likely to continue selling gasoline will be large service stations and truck stops owned or franchised by major oil companies, and gas station/convenience stores operated by large regional retail companies.

Businesses least likely to continue to sell gasoline are small service stations, country stores and resorts. Many may remain in business as grocery stores or auto repair shops, but the gasoline service they provide to local consumers will be lost.

In between the "most likely" and "least likely" ranges are hundreds of independent businesses that will have to meet EPA requirements. Some operators may quit gasoline retailing out of a fear of high compliance costs or a desire to "avoid the hassle" of complying.

To remain competitive, independents in head-to-head competition with large corporate retailers must sell gasoline at the same profit margin as the big companies. That margin may not provide the small retailer with sufficient income to meet the EPA requirements.

The following model reflects the physical and financial characteristics of hundreds of small petroleum retailers in small towns and rural areas where there is no competition from major retailers. Even in this "ideal" competitive situation, it appears that gasoline sales income will be too low to justify major new equipment purchases.

SMALL SERVICE STATION MODEL

PHYSICAL CHARACTERISTICS	FINANCIAL CHARACTERISTICS
1 to 3 Storage tanks	Monthly sales = 15,000 gallons
1,000 to 4,000 gals total capacity	Margin = $0.12 per gallon
1 to 3 gasoline pumps	Annual gross profit from gasoline sales = $21,600
Source: Department of Public Service	

BUSINESSES THAT WILL BE AFFECTED (continued)

Maps on **pages 10 and 11** illustrate the extent of the problem faced by small retailers and their customers.

The first map, based on a partial survey by the Department of Public Service, gives estimates of the numbers of gasoline outlets in 56 Greater Minnesota counties. The numbers in each county are estimates of:

1) Businesses likely to stop selling gasoline;
2) Businesses that may have trouble, but their future is difficult to predict.
3) Businesses likely to continue selling gasoline;

Department of Public Service personnel derived the numbers in each category by making judgements about individual retailers based on the number of pumps, number of storage tanks and total storage capacity for each retailer surveyed.

Generally, small storage tanks are old and will have to be replaced or upgraded. Total storage tank capacity and the number of pumps operated by a business reflect the probable gasoline sales volume. Using this information, and a good deal of direct experience with retail petroleum businesses, the retailers were divided into the three categories listed above.

Businesses in the first category, those likely to stop selling gasoline, operate two to five pumps and have a total storage capacity less than 10,000 gallons. Businesses in the third category, those likely to continue selling gasoline, operate a larger number of pumps and have storage capacities greater than 30,000 gallons. The second category represents medium size businesses with facilities and equipment between the first and third categories.

The second map, based on tank registration data from the Minnesota Pollution Control Agency, illustrates the number of underground petroleum storage tanks registered in each county. The numbers are divided into two categories:

1) Retail petroleum businesses in the county (from PCA underground storage tank registration records.)
2) Storage tanks operated by petroleum retailers.

For most of the counties listed, there is a strong correlation between Department of Public Service survey data and Pollution Control Agency tank registrations. However, the distribution of business types varies greatly from county to county. This makes it impossible to project a proportion from the partial survey map on page 10 to the statewide data map on page 11.

PROBLEM AREAS

Clearly, there are some parts of the state that already have very limited retail gasoline service. The new EPA rules will exacerbate the problem in these areas.

If some towns are left without gasoline service, it is possible that fewer consumers will be drawn into the towns. This could cause a "domino effect," reducing retail sales volume and threatening the viability of non-petroleum businesses in the towns. In situations like this, loss of local gasoline service would contribute to the declining economic viability of some small towns.

In some counties, the petroleum marketing industry is still dominated by small businesses. Many of them closely resemble the "small service station model" illustrated on page 7. Typically, they operate several small, old storage tanks and only two or three pumps. The limited storage and pumping capacity reflect the probable gasoline sales volume. Many of these small businesses will not be able to justify the cost of upgrading or replacing their equipment to comply with EPA regulations.

Existing large marketers, and possibly some new large marketers, in these counties will take over the market share relinquished by the small businesses. The same amount of gasoline will be sold in a given area, but it will be sold by a smaller number of larger businesses.

Gasoline may not be conveniently available to some area residents and tourists. Some small auto repair businesses may be less viable because they will lose the additional attraction of convenient gasoline service.

Some of the problem areas mentioned in this section can be identified on the maps. In counties where petroleum marketing is still dominated by small retailers, there are significant numbers of small businesses that are unlikely to remain in business, or likely to encounter financial trouble in attempting to comply with EPA regulations.

MAP - RETAIL GASOLINE OUTLETS, BY COUNTY

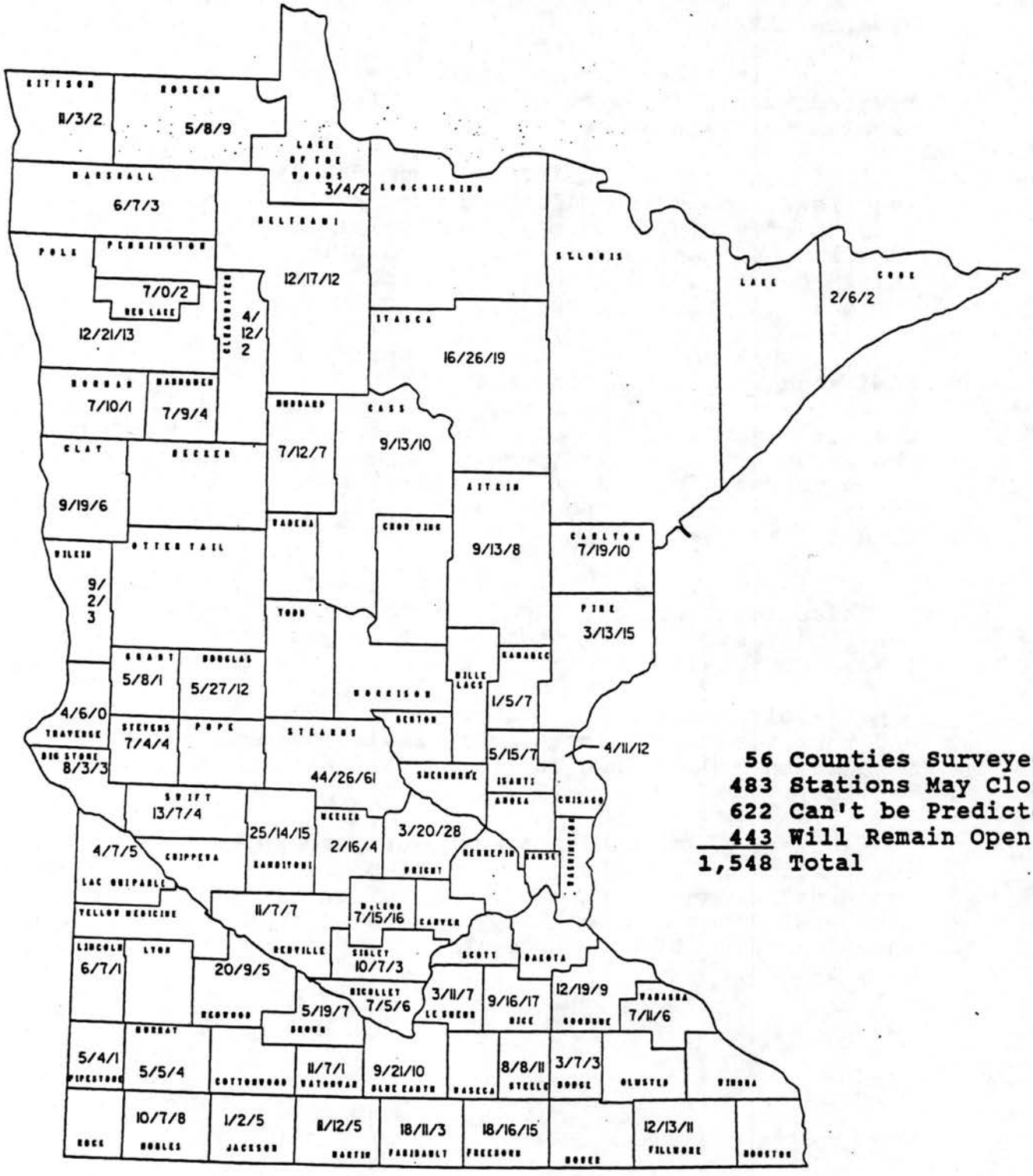

56 Counties Surveyed
483 Stations May Close
622 Can't be Predicted
443 Will Remain Open
1,548 Total

MAP KEY: **First Number = Retailers likely to stop selling gasoline**
Second Number = Retailers that may have trouble surviving
Third Number = Retailers likely to remain in business

Source: Dept. of Public Service waste oil, battery and UST survey.

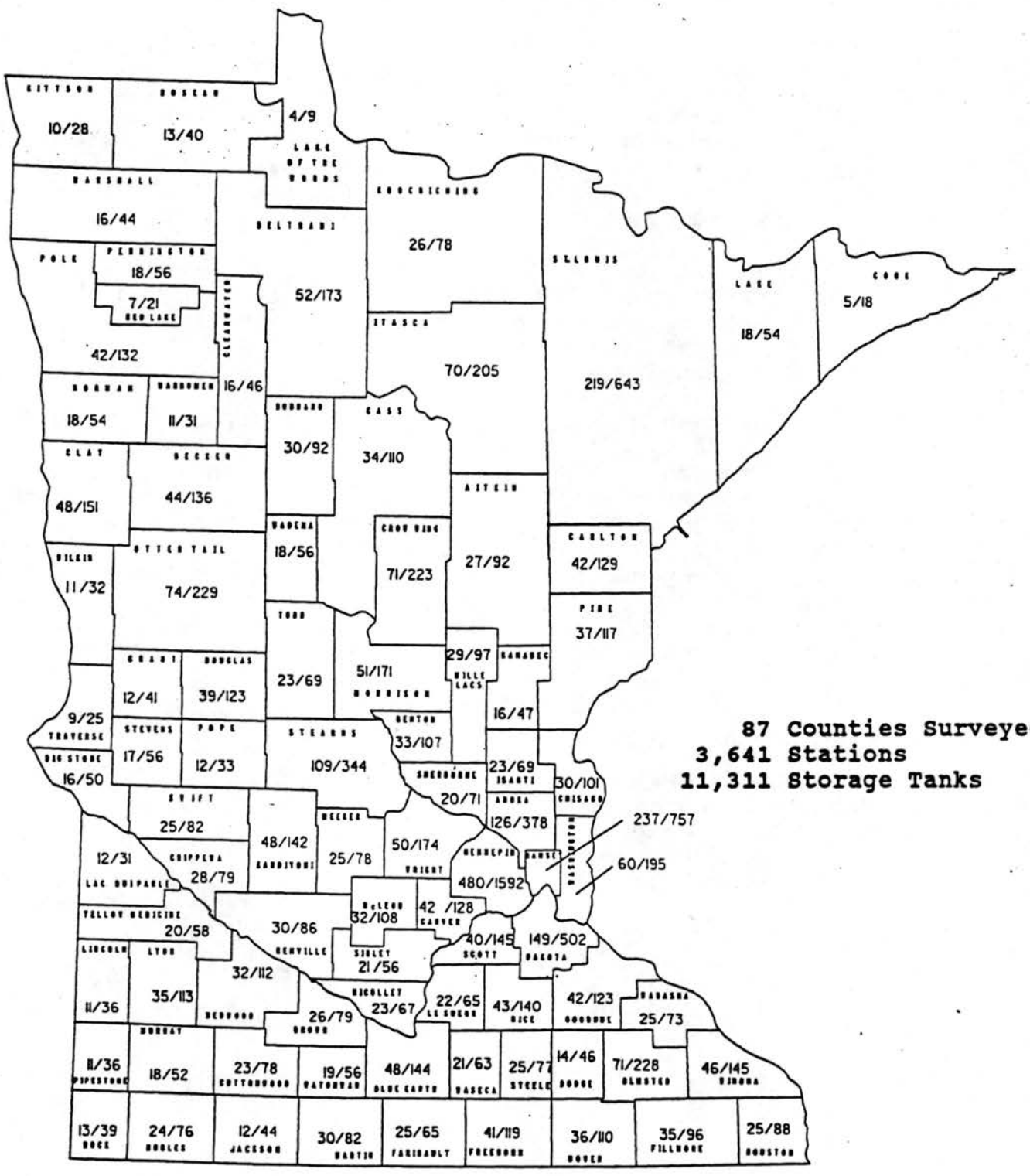

87 Counties Surveyed
3,641 Stations
11,311 Storage Tanks

MAP KEY: **First Number = Retail gasoline outlets**
Second Number = Tanks operated by retail gas outlets

Source: Minnesota Pollution Control Agency tank registrations.

ECONOMIC TRENDS IN THE INDUSTRY

Retail petroleum marketing has undergone major changes over the last fifteen years. **Small businesses** providing gasoline and automobile service, once the mainstay of the industry, **are being replaced by large gasoline/convenience store combinations. This trend will probably accelerate as the EPA underground storage tank regulations take effect.** Retail petroleum, at approximately 2% of business establishments and less than 1% of overall employment, is a small and shrinking sector of Minnesota's economy.

In the Twin Cities metropolitan area, between 1983 and 1987, small service stations have declined substantially. In their place are large gasoline stations and convenience stores. Service station employment growth has lagged behind overall employment growth. More gasoline is sold by fewer businesses, with more employees per establishment.

Greater Minnesota appears to be in a different phase of this same transition. Between 1983 and 1987, petroleum marketing businesses decreased in number, while employment in the industry increased at a greater rate than overall employment. Small one or two person shops are being replaced by large service stations and convenience stores with more employees. Businesses selling gasoline as a sideline are being replaced by businesses selling gasoline as a primary business.

The following graphs, based on Bureau of Labor Statistics, County Business Patterns data, illustrate the changes in the industry:

PERCENT CHANGE IN EMPLOYMENT - 1983 to 1987

Statewide service station employment grew 16.5%, lagging slightly behind the overall employment growth rate of 17.8%.

In Greater Minnesota, service station employment growth, at 16.4%, exceeded the overall employment growth rate of 12.5%.

In the metro area, service station employment grew 16.5%, lagging behind the overall employment growth rate of 20.7%.

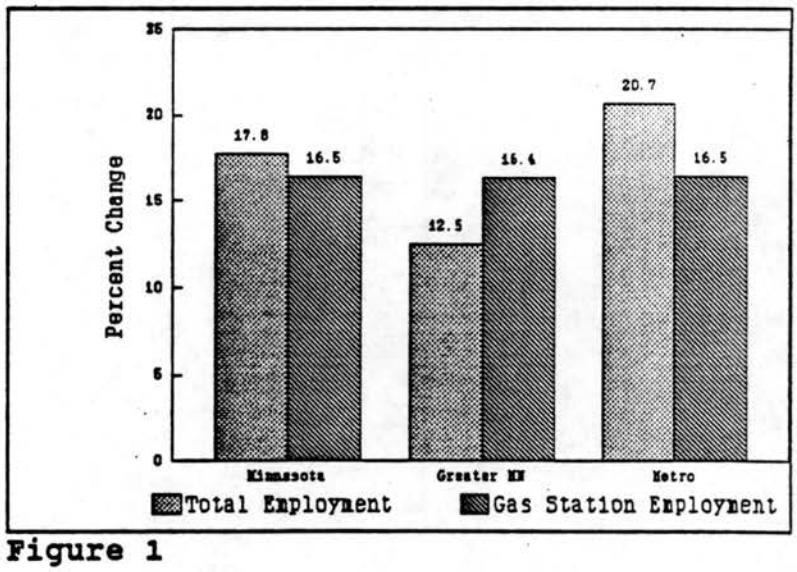

Figure 1

Source: DTED and Bureau of Labor Statistics

PERCENT CHANGE IN NUMBER OF ESTABLISHMENTS - 1983 to 1987

The total number of business establishments in the state has increased, while the number of service stations has declined.

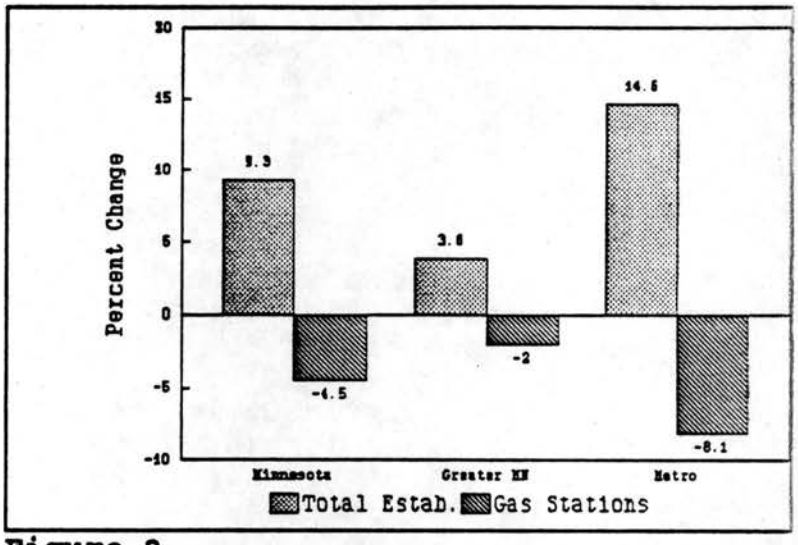

Figure 2

Source: DTED and Bureau of Labor Statistics

CHANGE IN NUMBER OF SERVICE STATIONS (by size) - 1983 to 1987

The total number of service stations in Minnesota has decreased. Hardest hit have been the small stations (1 to 4 employees), while large service stations (20 to 49 employees) have increased dramatically in Greater Minnesota.

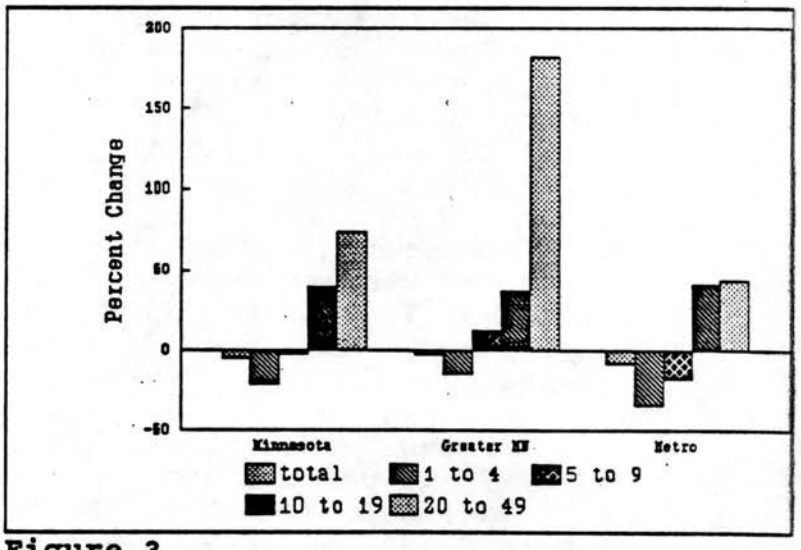

Figure 3

Source: DTED and Bureau of Labor Statistics

ECONOMIC TRENDS (continued)

THE RETAIL PETROLEUM SECTOR OF THE ECONOMY

Statewide, 2,153 businesses that report gasoline sales as the major portion of their income represent 2% of 106,378 businesses.

In Greater Minnesota, 1,299 gasoline stations represent 2.6% of the 49,442 businesses listed.

In the Twin Cities metro area, 854 gasoline stations comprise 1.5% of the 56,936 businesses listed.

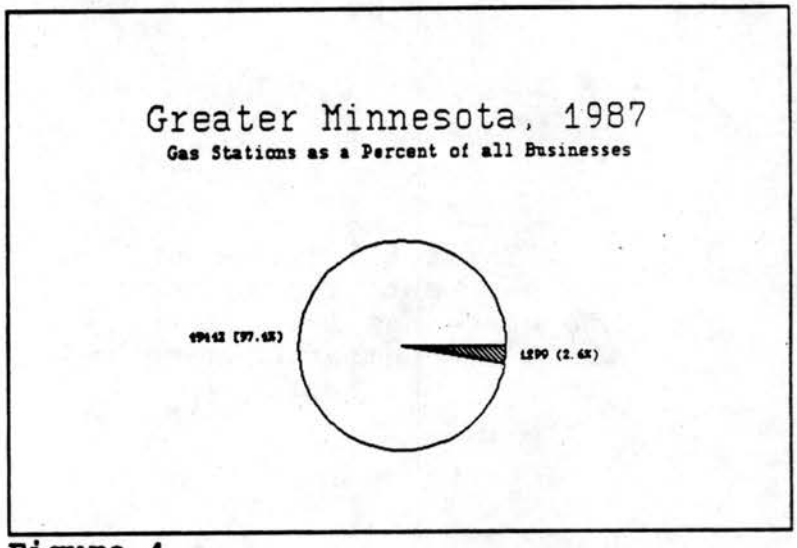

Figure 4

Source: DTED and Bureau of Labor Statistics

EMPLOYMENT IN THE RETAIL PETROLEUM INDUSTRY

Statewide, 15,221 employees of companies that report gasoline sales as the major portion of their income represent 0.9% of the 1,653,299 employees in all types of businesses.

In Greater Minnesota, 7,625 gas station employees represent 1.4% of the 555,949 employees in all types of businesses.

In the Twin Cities metro area, 7,596 gas station employees represent 0.7% of the 1,097,350 employees in all types of businesses.

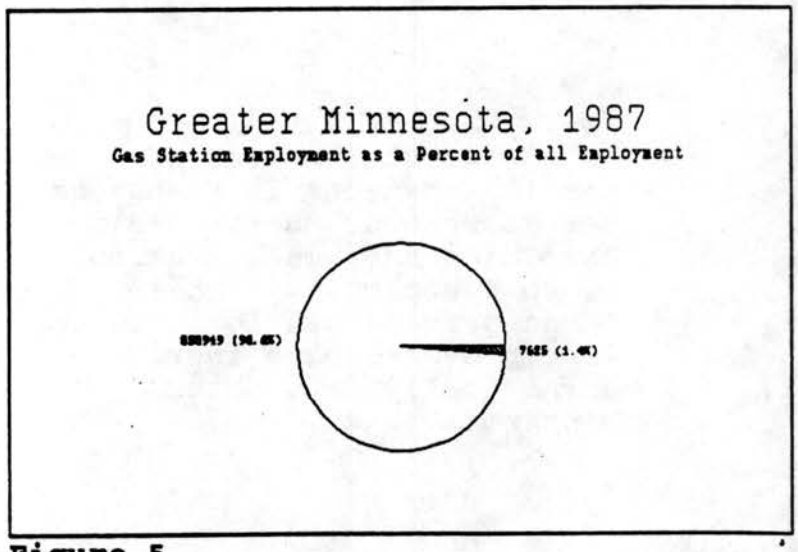

Figure 5

Source: DTED and Bureau of Labor Statistics

EMPLOYMENT IMPACT

As the preceding graphs and data illustrate, there is a trend toward declining employment in the small business segment of the retail petroleum marketing industry. This trend will accelerate as the EPA regulations take effect and many small business operators quit gasoline retailing to avoid a major investment in new tanks and equipment.

Employment in petroleum marketing represents only a small sector of overall state employment (0.9% in businesses that report gasoline sales as the major portion of their income).

In the 56 counties surveyed by the Department of Public Service (see map on page 10), there is a strong indication that 483 businesses may close, or stop selling gasoline. This is only a partial survey of the state. Minnesota Pollution Control Agency tank registration data (see map on page 11), show that there are at least 3,641 gasoline retailers in the state. Comparing the two maps will give some idea of the statewide potential for business closures and employment loss.

One notable exception to the trend toward slow growing or declining employment in the industry is the rapid employment growth among larger petroleum marketers in Greater Minnesota. This is probably a short term phenomenon related to the industry's transition to a market made up of large retailers. Large retailers have not yet displaced the small one and two person marketers. The Twin Cities Metro area serves as an example of the result of this transition.

FINANCIAL LOSS

Small rural service station owners, already under economic pressure, may suffer the greatest losses as a consequence of the EPA regulations. Many of these people may have factored the liquidation value of their businesses into their financial plans for retirement.

In many cases, service station properties in small towns have a negative market value. That is, the property cannot be sold until the storage tanks are removed and soil contamination is cleaned up. Removal and cleanup costs can exceed the market value of the property.

Soil contamination can be extensive. In 1989 in Mora, a service station replaced its storage tanks, pumps and driveway. During excavation, they found no evidence of leakage or contamination around the tanks.

However, the station had been on the same property for about 65 years. In it's early years it had an unpaved driveway. Soil contamination, caused by years of small spills from automobiles, extended 35 feet below the driveway surface. Soil removal and cleanup costs exceeded $50,000.

IMPACT ON OTHER BUSINESSES

EPA regulations will also affect local government agencies and a broad range of other businesses that do not sell petroleum products. **The complicated economics of this issue could cause the loss of several non-marketing businesses in some towns while helping some gasoline retailers to survive.**

In addition to gasoline stations, the EPA regulations will impact any business, or local government unit that operates an underground storage tank. Tanks holding only heating fuel for on-site use are exempt at the present time, but the exemption may be removed.

Police, fire, road maintenance, utility company, Postal Service and school bus fleets, along with trucking companies and other businesses that rely on fuel stored in underground tanks will face the same cost justification problems that confront retail marketers.

For example, a small trucking company that maintains its own fueling operation may not have the financial resources to upgrade or replace its tanks. If the local retail stations have been forced to close as a result of the EPA regulations, the trucking company would not have access to fuel in the vicinity of its operations base.

Conversely, city and county government operations, and a local school bus operator could all decide to close their underground storage tanks and purchase fuel from a local retailer. With the increased sales volume, the retailer might decide to upgrade or replace equipment and remain in the fuel marketing business.

A wide variety of other unexpected problems and solutions will be found as a consequence of the EPA regulations. **Essentially, it will be impossible to make accurate predictions about the viability of individual businesses or even about a group of businesses within a given area.** Many businesses that survive will do so only by making the necessary investments in equipment and by adapting to a changing market to take advantage of new sales opportunities.

On **page 11**, the first number in each county represents gasoline retailers that operate underground storage tanks registered with the Pollution Control Agency. The second number represents the total number of underground tanks operated by those retailers. The map gives a clear picture of the total number of retail businesses that will feel some impact from the EPA regulations.

These retailers will, in turn, be affected by the practical and financial decisions made by non-marketing storage tank operators (cities, counties, fleets, etc.) who may decide to close their tanks and purchase fuel from retail dealers, or in some cases, close their businesses and further depress the local market.

WHAT HAS BEEN DONE TO HELP?

Several programs, designed to assist retail petroleum marketers are already available from state government agencies.

The Petrofund Board and the Department of Commerce manage the **Petroleum Tank Release Compensation Fund.** The fund reimburses 90% of up to $250,000 of actual cleanup costs (maximum reimbursement is $225,000) incurred by underground storage tank operators for each leak or spill cleanup occurrence. The fund has paid for 102 cleanup operations, averaging $40,000 per operation, since it was established in 1987.

This fund, as it is presently structured, should reduce the current need for insurance coverage. Businesses should only need to insure for the $25,000 not covered by the fund, plus any costs over $250,000. The average cleanup cost, at $40,000, is substantially under the $250,000 limit. To date, the total reimbursement from the fund has been $3,850,000 (as of November, 1989). However, even with the amount of coverage provided by the fund, insurance coverage is either unavailable or very costly.

The State Fire Marshal Division of the Department of Public Safety has developed rules to allow **dispensing of petroleum products from above ground storage tanks.** Local fire chief approval is required for all above ground installations. Although above ground tanks are not subject to EPA regulation at this time, the Resource Recovery and Conservation Act will probably be amended, in the very near future, to regulate above ground tanks. Leak and spill cleanup insurance will probably be required.

Installation costs, due to fire safety and leak containment considerations, will probably be substantial. Fire and liability insurance costs remain unknown at the present time. However, the option of above ground storage may prove to be cost effective and may help some small rural retailers, resorts, and fleet operations to continue to market or store petroleum products.

The Department of Trade and Economic Development manages the Omni 504 Program to provide **financial assistance to a very limited number of small business operators who want to expand their businesses.**

This is a program for small business expansion that cannot be used to clean up spills or leaks from storage tanks. However, it may be very helpful to some small marketers' who want to take advantage of new opportunities that may open up as a result of changes brought about by the EPA regulations. To qualify, a marketer would be required to have plans to expand the business and hire more employees.

SUMMARY - CAPSULES FROM PRECEDING PAGES

- Most of the retail petroleum marketing industry in Greater Minnesota will be affected by the EPA technical and financial responsibility requirements for underground storage tanks. Some businesses will close or stop selling gasoline. Some will incur substantial equipment and cleanup costs. Others will find expanded sales opportunities.

- Many small gasoline retailers may not be able to afford to meet the EPA technical or financial responsibility requirements.

- Some larger, independent retailers can probably afford to meet the technical requirements, but the continuing high cost of insuring underground storage tanks cannot be justified.

- Large independent, corporate and franchised outlets have the financial resources to meet the technical requirements. Many will self insure to meet the financial responsibility requirements.

- Economic trends in the retail petroleum industry have already created a difficult business climate for small retailers.

- The EPA requirements will accelerate the trend that is already forcing many small retailers out of business.

- The 5 year and 10 year EPA compliance schedules for leak detection and corrosion protection systems have been effectively compressed by the realities of the insurance market. Insurance companies cannot offer reasonably priced coverage, if any coverage at all, for storage tanks in unknown condition. Usually, to obtain insurance coverage, businesses must be in compliance with the technical requirements.

- As small retailers are forced to stop selling gasoline, consumers will find fewer gasoline outlets in parts of Greater Minnesota where the industry is presently dominated by small retail operations.

- Small retailers who own their business property may lose equity in the property because tank removal and cleanup costs can exceed the market value of the property. This situation may eliminate retirement assets or income for some small business owners.

- Some petroleum marketers may experience sales increases as other businesses remove tanks and look to retailers for their fuel needs.

- Due to the complicated economics of this issue, influenced by normal industry trends and forced by federal regulatory action, it is impossible to predict the economic viability of individual businesses or the future availability of gasoline service in individual towns.

OPTIONS - CAN STATE GOVERNMENT HELP BUSINESSES MEET THE EPA TECHNICAL REQUIREMENTS?

Grants, low interest loans or loan guarantee programs could help small gasoline retailers meet the EPA technical requirements.

Equipment cost estimates are illustrated on **pages 4 and 5**. Costs will range from $19,000 to upgrade existing equipment, to more than $60,000 to install new large capacity storage tanks and equipment. The maps on **pages 10 and 11** indicate the potential number of businesses that could seek this type of assistance.

There are problems with this approach to assisting the industry:

1) **Cost.** Even at the lowest possible cost to upgrade existing equipment, there are hundreds of retail gasoline businesses that may need assistance. See maps on pages 10 and 11.

2) **Industry trends.** Prevailing economic trends in Greater Minnesota are already forcing small retailers out of the gasoline marketing business. It may not be practical to attempt to save businesses that might not survive the effects of other economic forces.

3) **Targeting.** It is not possible or fair to identify, and target assistance to, the "most viable" of several retailers in a town.

4) **Loan Default Rates.** The small business segment of the petroleum marketing industry is already in trouble. The default rate on loans could be unacceptable.

However, other states have offered financing programs to help small petroleum retailers meet the EPA technical requirements. The following examples illustrate three approaches to this type of program:

1) **Iowa** offers loan guarantees to qualified retailers and other businesses with total valuations less than $200,000. Guarantees range from 50 to 90 percent of the loan value, with participating financial institutions providing loans at 2% below to 1% above their prime rate.

2) **South Dakota** provides funding for loans administered through the Small Business Administration. Small petroleum retailers and other small businesses must meet SBA financial criteria, but financing is also available to businesses that are too large for SBA loans. As of October 1989, the interest rate was about 11%, including servicing fees.

3) **Vermont** provides loans to retail outlets with sales under 20,000 gallons per month and to municipalities under 2,500 residents. The zero interest loans of up to $40,000 are intended to sustain availability of motor fuel in rural areas. Local banks process and approve applications and service approved loans.

OPTIONS - CAN STATE GOVERNMENT HELP BUSINESSES MEET THE EPA FINANCIAL RESPONSIBILITY REQUIREMENTS?

State government has an opportunity to provide a "level playing field" for both small and large petroleum marketing companies. Two possible actions, outlined briefly in options 1 and 2 below, will give some smaller businesses a chance to remain in the market.

OPTION 1
OFFER PERMANENT, STATEWIDE INSURANCE COVERAGE

The EPA is expected to approve the structure of the Petroleum Tank Release Compensation Fund, managed by the Petrofund Board and the Department of Commerce. When approval is received, the fund could be expanded to provide the $1 million coverage required to demonstrate financial responsibility.

At its current coverage level, 90% of up to $250,000 of actual cleanup costs (maximum reimbursement is $225,000), the fund does not meet EPA requirements. Expanding the fund to $1 million will provide financial responsibility coverage for all storage tank operators in Minnesota. The federal Leaking Underground Storage Tank (LUST) Trust Fund covers clean up costs over $1 million.

OPTION 2
PROVIDE SHORT TERM COVERAGE TO CLEAN UP EXISTING PROBLEMS

The Petroleum Tank Release Compensation Fund could be expanded to offer $1 million of coverage to clean up existing leaks and spills. That is, the fund would cover cleanup costs for tanks installed prior to an effective date to be set by the Legislature.

This method addresses the insurance issue as a short term problem. The fund could be used to cover cleanup costs for leaks and spills from old storage tanks. It would not cover any problems in newer "state of the art" facilities that already meet the EPA technical requirements. The tanks at these facilities can be insured through private insurance companies. Annual premium costs (see page 6) range from $6,000 to $12,000.

As old facilities close or are brought into compliance, the fund would cover fewer and fewer storage tanks. The business of providing insurance coverage would gradually revert to the insurance industry.

OPTIONS (continued)

OPTION 3
IDENTIFY PROGRAMS TO REDUCE HARDSHIPS

One of the immediate problems resulting from the EPA regulations will be the loss of livelihood for many owners and employees of small retail petroleum businesses. As the graphs on pages 12 through 14, and the maps on page 10 and 11 indicate, this is particularly true in non-metropolitan areas.

An interagency work group should be established to identify ways to help these people utilize any existing state services that might lessen their hardship. The task force should, at least, include agencies involved in human services, training and new business assistance.

GLOSSARY OF TERMS USED IN THIS REPORT

Marketer, Retailer, Petroleum Marketer.
These terms are used interchangeably throughout the report to describe businesses that sell gasoline at retail. The terms are not used to describe non-retailers like petroleum distributors.

Large Retailer, Large Marketer, Large Gasoline Station.
These terms are used to describe businesses with a substantial monthly gasoline sales volume. Sales volume for a business in this range can vary from 100,000 to 500,000 gallons per station, per month. There are only a few businesses in Minnesota with a monthly sales volume approaching 500,000 gallons.

Small Service Station, Large Service Station.
The traditional retail gasoline business that offers automotive service and gasoline sales.

Gasoline Service Station.
This is a special, narrowly defined term used in the graphs and accompanying data on pages 12 through 14. The definition, from Bureau of Labor Statistics SIC Code 554 is: **"Gasoline service stations primarily engaged in selling gasoline and lubricating oils, and which may sell other merchandise or perform minor repair work. Includes retail automobile service stations, gasoline filling stations and marine service stations."**

Because this definition is so narrow, the data on pages 12 through 14 do not include all petroleum retailers. For example, a Superamerica station is included under the definition, but a Tom Thumb convenience store is not. Businesses included under SIC Code 554, however, provide a very good indicator of industry trends.

Convenience Store.
A business that derives part of its income from gasoline sales. Other income is derived from the sale of groceries and other convenience items.

Country Store.
Small grocery stores, general stores and bait shops that also sell gasoline. These businesses are most common in Minnesota's resort areas.

Underground Storage Tank Operator.
Any business that owns or operates an underground storage tank. Although other UST operators are frequently mentioned, this report focuses on UST operators who are retail gasoline marketers.

CONTRIBUTORS TO THIS REPORT

Department of Commerce	Lisa Rotenberg
Petrofund Board	Susan Bergh Robin Hanson
State Planning Agency	Arnie Anderson
Minnesota Pollution Control Agency Tanks & Spills Section	John Holck Larry Palmer
Department of Public Safety Fire Marshal Division	Robert Imholte
Department of Public Service Commissioner's Office Energy Division Weights and Measures Division	 Dave Cook Greg Holman Michael Blacik
Department of Trade and Economic Development	Kevin Olsen
Department of Transportation	Maps on pages 9 and 10 were produced by the Mn/DOT Computer Aided Engineering Services Section

GROUPS AND INDIVIDUALS INVITED TO COMMENT

The following groups and individuals were invited to comment on the contents of this report. The comments received are attached.

Association of Minnesota Counties	Jim Mulder
League of Minnesota Cities	Don Slater Peter Tritz Joel Jamnik
Minnesota Association of Townships	David Fricke
Minnesota Service Station Association	Brian Ettesvold
Minnesota Petroleum Council	Darrell Bunge
Northwest Petroleum Association	Bob Krogman
Federated Insurance, Owatonna	Donald Ray Huff
MSI Insurance	Jim Bourland
Minnesota Petroleum Services, Inc.	Ken Wingard

GROUPS PROVIDED WITH THE REPORT

In addition to the groups listed above, this report was also provided to:

Minnesota Senate Senate Research	Dan Salomone
Minnesota House of Representatives House Research	Carole Pagones

SUMMARY - RESPONSE CAPSULES

Response from the League of Minnesota Cities

1) If state government becomes further involved in this issue, the state should find ways to help tank owners, private and public, meet the capital costs of replacing and upgrading tanks.

2) Capital cost to upgrade or replace tanks will be a major problem. Insurance pricing will be a strong incentive to replace tanks.

3) State government should move as quickly as possible to make a decision on whether to expand the Petrofund.

4) If the Petrofund is expanded, it should be done in a way that will retain the incentive to remove and replace old tanks.

Response from Federated Insurance

1) A 1989 amendment to EPA rules changed insurance policy wording requirements. The amendment appeared to increase exposure for insurers. Consequently, insurance companies set higher premiums for pollution policies. Recent clarification has allowed companies to reduce their premiums.

2) It is difficult to coordinate insurance benefits with the Petrofund. Federated does not offer a policy with a $250,000 deductible because: **a)** They offer coverage for spills not covered by the Petrofund; **b)** To contain total cleanup costs, an insurance company cannot relinquish control of the initial cleanup work up to $250,000, and; **c)** The Petrofund does not cover defense costs incurred by the insured. An insurance company will provide coverage and will handle and control third party allegations.

Response from Northwest Petroleum Association

1) Northwest Petroleum Association represents 800 distributors who own and operate nearly half the gasoline stations in Minnesota.

2) The cost of replacing tanks and equipment will cause many businesses to close. Only the largest marketers have a good chance of surviving.

3) The study group's report is a worst case scenario. Problems can be mitigated by expanding the Petrofund to provide financial responsibility coverage for all petroleum marketers.

4) The industry may also face increased regulatory pressure from proposed changes to federal DOT and EPA regulations, and from proposals to change excise tax collection procedures. The additional costs mandated by these proposed regulations will increase existing problems in the industry.

League of Minnesota Cities

183 University Ave. East
St. Paul, MN 55101-2526
(612) 227-5600 (FAX: 221-0986)

November 29, 1989

To: Michael Blacik, Department of Public Service

From: Donald Slater, Joel Jamnik, and Peter Tritz, LMC

Re: Underground storage tank issues

Thank you for sending us a copy of the draft report on the underground storage tank issues. From the standpoint of cities in Minnesota, we have only a couple of comments to add to your discussion.

First, we would suggest that if the state intends to become further involved in the tank issue, the state should consider finding ways to help tank owners, including cities, meet the capital costs of replacing and upgrading tanks.

Even though EPA allows a phase-in period of up to ten years to bring existing tanks into compliance with the corrosion protection and leak detection requirements, most tank owners will probably be effectively forced to do so much sooner. The information we have from insurers is that they will either be unwilling to write coverage at all for non-complying tanks, or that the cost of insurance will be much greater - perhaps three to five times greater - for tanks not meeting EPA requirements. If the tank owner intends to continue to operate the tank, the owner knows he or she will have to spend the money to bring it into compliance eventually; the owner might as well make that capital expenditure now, so as to reduce insurance costs during the interim period until EPA forces an upgrade of the tank.

Obviously, the insurers agree that tanks meeting EPA requirements are much less likely to have long-running undetected leaks. And it certainly seems to be in society's interest to eliminate those old tanks as soon as possible; not only does it eliminate the risk of future leaks, it also means that existing leaks will be discovered and corrected sooner, perhaps before any more environmental damage is done.

In short, while we've heard a great deal about the cost and availability of insurance, we think it's more likely that the capital costs of upgrading tanks will be the key financial consideration that tank owners face. The way insurance is likely to be priced will create a strong incentive to get that upgrading done quickly, ahead of EPA's required timetable. Ultimately, it's in everyone's interest that that happen quickly.

Second, we would suggest that the decision be made as quickly as possible as to whether the state will expand the Petrofund to cover the full extent of the tank owner's EPA financial responsibility requirements.

Many cities in Minnesota currently own and use underground tanks, and our survey results indicate that cities will continue to use a fair percentage of those. We at the League have done a fair amount of preliminary work in determining how best to help our members meet the financial responsibility requirements. We expect that we will be able to put together a program for our members through which coverage will be available at a reasonable cost. We would do so through a "group purchase" approach, rather than a pooled self-insurance approach. That purchase might be from one of the conventional commercial carriers, or possibly from a risk retention group.

However, the current uncertainty as to what will happen with the Petrofund makes it difficult to do so. We are hesitant right now to commit the time and resources to put a program together; that time and effort would be wasted if the Petrofund is expanded, making private insurance unnecessary.

For the same reason, insurance carriers seem somewhat reluctant to commit the time and resources to developing a program to coordinate with the current Petrofund. The rates and coverages developed might well have to be revised if the Petrofund program is changed in the coming session. Or it might turn out to be totally wasted effort on the insurer's part, if the Petrofund is expanded to fully meet EPA requirements.

Obviously, no one can speak for the Legislature or make a definite commitment as to what might happen in the coming legislative session. But if the agencies involved in preparing this report, and/or the legislative leaders could give some indication of what if any changes they intend to pursue in the coming session, it might make it easier to get insurers lined up to begin providing whatever coverage is needed.

Finally, we'd suggest that if the Petrofund coverage is expanded, it should be done in a way that retains some incentive to get old tanks replaced ahead of the EPA-required deadlines. As mentioned above, the pricing of commercial insurance will likely provide such an incentive. It would be ironic if expanding the Petrofund made it more attractive for tank owners to put off upgrading tanks until EPA absolutely requires it.

Thank you very much for the opportunity to comment on these issues. If we can be of any further help, please don't hesitate to call. We will appreciate being kept abreast of developments in this area, including any legislative proposals developed by this group or by any of the individual agencies involved.

FEDERATED INSURANCE

DONALD RAY HUFF, Senior Vice President

November 28, 1989

Mr. Michael F. Blacik
Weights & Measures Division
Minnesota Department of Public Service
790 American Center
150 East Kellogg Boulevard
St. Paul, MN 55101

YOUR LETTER OF 11/15/89

Dear Mr. Blacik:

I appreciate receiving the draft copy of your report on the effects of the Federal Environmental Protection Agency regulation on underground petroleum storage tanks in Minnesota. I do not feel that I or anyone at Federated is qualified to make any comments except on the insurance issues of the report.

I think you have done a fine job of reviewing the insurance issues that are a part of these regulations. I would make only a couple of additional comments:

- The regulations that were originally published in 1988 were amended from a financial responsibility standpoint in November 1989. The wording required on insurance policies was changed somewhat causing us and many other insurance companies a great deal of confusion about what we should certify on our policies.

We have now refiled the wording to qualify with a new wording outlined by the Environmental Protection Agency. This wording, incidentally, reduced our exposure and, therefore, allowed us to reduce the cost that we intended to have for our new policy. The original regulations required an extended reporting period for claims be provided free of charge and that there be a 60-day notice for all cancellations including non-payment of premiums. These two items are now changed to provide a 10-day cancellation for non-payment of premiums and an extended reporting period provision that is paid for if desired by the insured.

The other area of concern is being able to coordinate benefits with the Minnesota Petrofund. They have taken the position that the only policies that really coordinate are the ones with a $250,000 deductible. Therefore, the policy has the deductible that is equal to their benefit. We do not want to write a policy with a $250,000 deductible for several reasons. First of all, we are concerned about controlling the cost of any losses and while we have currently not had a loss in excess of $250,000 in Minnesota, we have in a number of other states. We don't want to relinquish controlling the cost of clean-up to someone we are not sure how they will handle it. Secondly, we are concerned about the fact that there are many items that we cover under our pollution policy (such things as loading and unloading vehicles) which are not covered by the Minnesota Petrofund. Trying to have different deductibles on different coverage items is always a very sticky situation in designing insurance policy wordings. Finally, we are concerned because there is not defense costs coverage provided in the Minnesota Petrofund program even though it

does provide for third party coverage. We just feel that our insureds need the defense costs coverage and someone to handle and control the third party allegations.

I realize these items had no opportunity to be covered in your report since they were either done after the report was written or something that you would have been unaware of as far as coordinating with the Petrofund Board.

If we can be of any further assistance, please do not hesitate to let us know.

Sincerely,

Donald Ray Huff
Senior Vice President

cal

NORTHWEST PETROLEUM ASSOCIATION

2345 Rice St. - Suite 173
St. Paul, Minnesota 55113
484-7227

OFFICERS

Steve Palmquist
President

Tony Yocum
Vice President

Steve Gilbertson
Vice President

John Dvorak
Treasurer

Dwayne Hohn
Secretary

DIRECTORS

John McKinney
Darrel Wagner
Jim Petersburg
Bucky Wang
Derrill Holland
Howard Fremling
James Moores
Harley Eggen
Cy Dehn
Bob Novak
Vern Kelley
Lynn Dokkenbakken
Steve Loge
Merlin Robinson
Loren Poppe
Jerry Deetz
Palmer Borgen
Marlin Besler
Andell Vilandre
Ed Uhlich

Bob Krogman
Exec. Director

December 15, 1989

Mr. Mike Blacik
Weights & Measures
2277 Highway 36
St. Paul, MN 55113

Mr. Blacik:

Thank you for the opportunity to comment on the report of the Underground Storage Tank Study Group. We sent this report to several members of the Association and the following comments are a consensus of the group.

Northwest Petroleum Association is a trade association of about 800 petroleum marketers throughout the state. As a group they own and operate 1500 to 1700 of the states estimated 3700 service stations and convenience stores. The biggest majority of these are in rural Minnesota. This report hits home.

The scenario that has only the largest marketers continuing in business because only they can afford to replace equipment and meet the insurance requirement could happen as described.

The cost of replacing tanks and piping will cause many businesses to close. The inability to get or afford insurance and replace tanks in time to meet the financial responsibility requirements will double or triple that number. Particularly when insurance premiums are escalating at between 100 and 200 percent per year.

In our opinion, this worst case scenario can be mitigated by changing the state fund so that it meets the Federal financial responsibility requirement. This was mentioned as a possible solution in the report, but we feel it was not emphasized enough. This may in fact be the only viable method of meeting the financial responsibility requirements available to small tank owners.

An important point not addressed in the report is the effect other proposed rule or statute changes would have. DOT proposals for bulk delivery truck retrofits, EPA proposals for vapor recovery equipment, or changes in excise tax collection procedures could have an insurmountable financial impact on the already strained stability of small petroleum marketers.

Finally, Mr. Blacik, we commend you and the study group for producing a quality report. The information was pulled together and presented in an accurate, comprehensive manner that demonstrates an understanding of a complex problem facing small petroleum marketers and all other underground tank owners.

Thank you.

Sincerely,

Bob Krogman
Executive Director

BK/hw

Minnesota Pollution Control Agency
520 Lafayette Road, Saint Paul, Minnesota 55155-3898
Telephone (612) 296-6300

Celebrate MINNESOTA 1990

February 6, 1991

Ms. Maryanne Hruby, Director
Legislative Commission to Review Administrative Rules
55 State Office Building
St. Paul, Minnesota 55155

Dear Ms. Hruby:

RE: Administrative Procedures Act - Minnesota Statutes Section 14.12
Deadline to Publish Notice

The Minnesota Pollution Control Agency (MPCA) is hereby giving notice that it will not meet the 180 day deadline to publish notice of intent to adopt a rule with regard to Minn. Stat. § 116.49. This statute directs the MPCA to adopt rules applicable to all owners and operators of underground storage tanks.

The delay in implementing these rules was due to a delay in adoption of the final federal regulations establishing technical standards and corrective action requirements for underground storage tanks. These regulations became effective on December 22, 1988.

The MPCA published a Notice of Intent to Solicit Outside Opinion in the November 28, 1988, State Register. Because of the complexity of the federal regulations and the large number of affected parties (over 14,000 underground tank owners in Minnesota), additional time was needed to develop a Statement of Need and Reasonableness and draft rules for noticing. The Legislative Commission to Review Administrative Rules was furnished with a copy of the Statement of Need and Reasonableness on June 26, 1990. The proposed rules were noticed in the State Register on July 30, 1990.

In response to comments received during the notice period, additional meetings were held with affected parties. The rules, as originally noticed will be withdrawn and partially renoticed. The parts of the rules addressing technical standards for underground storage tanks will be renoticed in February 1991. As required by the Administrative Procedures Act, we are forwarding a copy of the Statement of Need and Reasonableness for the Proposed Permanent Rules Relating to Underground Storage Tanks which will be noticed in February. If you need further information, please contact Beth Lockwood, Supervisor, Compliance and Assistance Unit, Tanks and Spills Section at 612/643-3408.

Sincerely,

Barbara Lindsey Sims

Barbara Lindsey Sims
Deputy Commissioner

Enclosure

cc: The Honorable Arne Carlson, Governor, State of Minnesota
The Honorable Willard Munger, Minnesota State Representative
The Honorable Bob Lessard, Minnesota State Senator
The Honorable Steven G. Novak, Minnesota State Senator

STATE OF MINNESOTA
POLLUTION CONTROL AGENCY

In the Matter of Proposed Rules Governing
Underground Storage Tank Technical
Standards, Minn. Rules ch. 7150.

DECLARATION OF COUNSEL

I, Ann E. Cohen, Special Assistant Attorney General, do hereby declare that I have examined the above-captioned rules and the supporting rulemaking record, and that, based on my examination, the Administrative Procedure Act and Minnesota Rules ch. 2010 have been followed, with the following exception.

Minn. Rules pt. 2010.0200 requires that the notice of intent to adopt a rule without a public hearing be signed by a person authorized to sign and give notice of the agency's intent to adopt a rule. Although the name of the person authorized to sign and give notice of the Minnesota Pollution Control Agency's intent to adopt the rule appeared on the notice as mailed, the notice was not signed. However, the State Register publication authorization was signed by the person authorized to give notice of the Agency's intent to adopt the rule, demonstrating that the publication of the notice was properly authorized. Because the publication of the notice was properly authorized, the failure to obtain a handwritten signature on the notice should be considered harmless error.

For Attorney General billing purposes, four-digit docket client code is 0694.

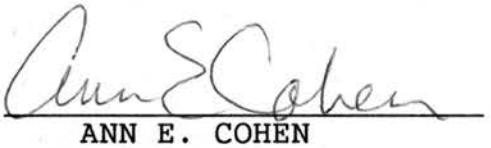

ANN E. COHEN
Special Assistant
Attorney General

Environmental Protection Division