Pinout		
Signal	**CON A**	**CON B**
+	1	1
-	2	2

Label Specification (Item 4)	
Text	114-1
Text Color	Black
Label Color	Silver or White
Label Width	9mm +/- 2mm
Label Length	40mm +/- 4mm

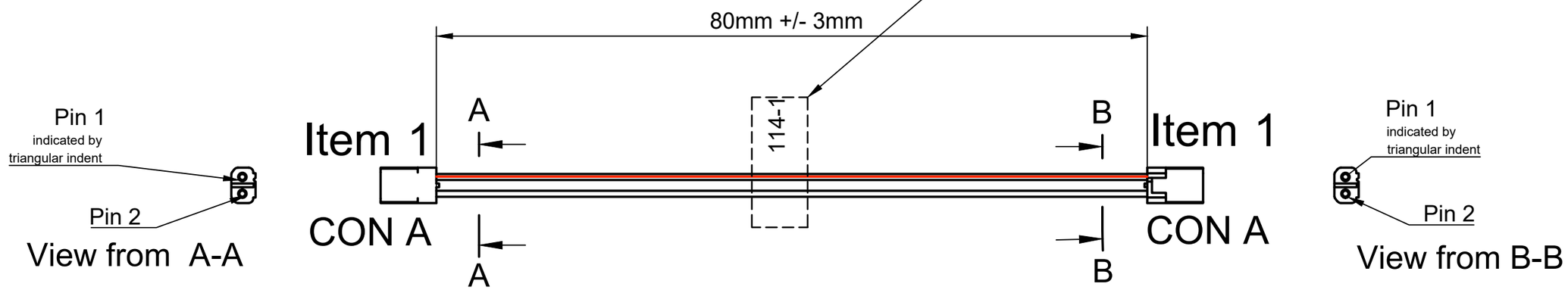

PARTS LIST (NO SUBSTITUTIONS FOR LISTED MPNs UNLESS APPROVED BY MODALAI)			
ITEM #	DESCRIPTION	MPN	QTY
1	CON A: JST 1.8MM HOUSING, 2-POS, YELLOW	SFHR-02V-L	2
2	Terminal JST eSFH Series 26-22AWG	SSFH-001T-P0.5	4
3	Black and Red silicone cable, 22AWG, 80mm		1 ea.
4	Label, see label specs above		1

https://www.modalai.com/

MODAL AI ROBOTIC PERCEPTION

Design Copyright by ModalAI, INC.

Approved by: HW_ENG

Document type: NF_CABLE_DWG

Document status:

Title: SFHR-L to SFHR-L VBAT Extension Cable, 80mm

DWG No.: MCBL-00114-1

Rev.: A | Revision Date: 09/01/2024 | Sheet: 1