Pinout		
Signal	**CON A**	**CON B**
VBUS	1	1
D- (Green)	2	2
D+ (White)	3	3
GND	4	4

Twisted Pairs for Pins 2:3

Label Specification (Item 7)	
Text	152-1
Text Color	Black
Label Color	Silver or White
Label Width	9mm
Label Length	40mm

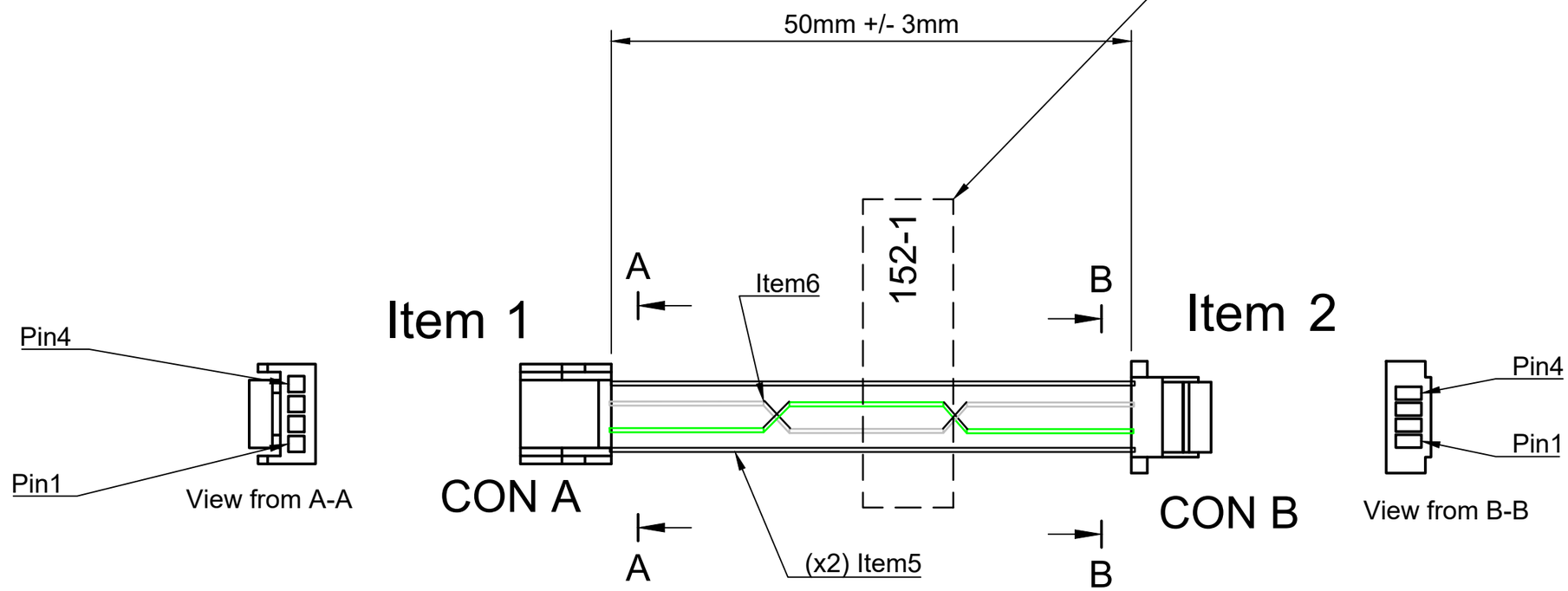

PARTS LIST (NO SUBSTITUTIONS FOR LISTED MPNs UNLESS APPROVED BY MODALAI)			
ITEM #	DESCRIPTION	MPN	QTY
1	CON A: JST 1.25MM HOUSING, 4-POS	GHR-04V-S	1
2	CON B: JST 1.0MM HOUSING (with Protrusions), 4-POS	SHR-04V-S-B	1
3	Terminal JST eGH Series 30-26AWG	SSHL-002T-P0.2	4
4	Terminal JST SR Series 32-28AWG	SSH-003T-P0.2-H	4
5	Black PVC cable, 26AWG, 50mm		2
6	White/Green Twisted Pair PVC cable, 28AWG, 50mm effective		1
7	Label, see label specs above		1

https://www.modalai.com/

Design Copyright by ModalAI, INC.

Approved by: HW_ENG

Document type: NF_CABLE_DWG

Document status:

Title: 4-pin JST GH to 4-pin JST SH for USB2, 50mm

DWG No.: MCBL-00152-1

Rev.	Revision Date	Sheet
A	06/26/2025	1