Image may differ from product. See specification for details.

23124 CCK/W33

Spherical roller bearing with tapered bore and relubrication features

Spherical roller bearings can accommodate heavy loads in both directions. They are self-aligning and accommodate misalignment and shaft deflections, with virtually no increase in friction or temperature. The design includes features to facilitate relubrication. The bearings can be used in a modular system, including housings, sleeves and nuts.

- Accommodate misalignment
- High load carrying capacity
- Relubrication features
- Low friction and long service life
- Increased wear resistance

Overview

Dimensions

Bore diameter	4.7244 in
Outside diameter	7.874 in
Width	2.4409 in

Performance

Basic dynamic load rating	120 048 lbf
Basic static load rating	156 242 lbf
Reference speed	2 600 r/min
Limiting speed	3 400 r/min
SKF performance class	SKF Explorer

Properties

Number of rows	2
Locating feature, bearing outer ring	Without
Bore type	Tapered 1:12
Cage	Sheet metal
Radial internal clearance	CN
Tolerance class for dimensions	Normal
Tolerance class for run-out	P5
Sealing	Without
Lubricant	None
Relubrication feature	With
Candidate for remanufacturing	Yes
Indicative carbon footprint for new product	59.4 lb CO_2e
Indicative carbon footprint for remanufactured product	20.8 lb CO_2e

Logistics

Product net weight	16.5 lb
eClass code	23-05-09-11
UNSPSC code	31171510

Technical specification

Bore type	Tapered 1:12

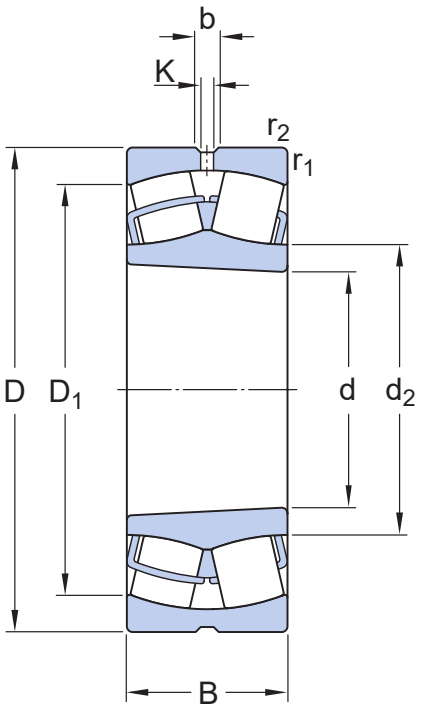

Dimensions

d	4.7244 in	Bore diameter
$t_{\Delta dmp}$	0 – 35 µm	Deviation limits of mid-range bore diameter
$t_{\Delta SL}$	0 – 35 µm	Deviation limits of tapered slope
D	7.874 in	Outside diameter
$t_{\Delta Dmp}$	-30 – 0 µm	Deviation limits of mid-range outside diameter
B	2.4409 in	Width
$t_{\Delta Bs}$	-80 – 0 µm	Deviation limits of ring width
d_2	≈ 5.4724 in	Shoulder diameter of inner ring
D_1	≈ 6.8504 in	Shoulder/recess diameter of outer ring
b	0.3268 in	Width of lubrication groove
K	0.1772 in	Diameter of lubrication hole
$r_{1,2}$	min. 0.0787 in	Chamfer dimension
	Normal	ISO tolerance class for dimensions

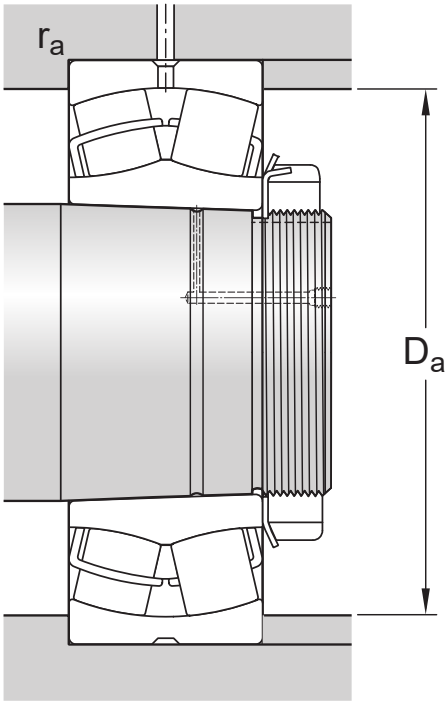

Abutment dimensions

D_a	max. 7.4409 in	Diameter of housing abutment
r_a	max. 0.0787 in	Radius of fillet

Calculation data

SKF performance class		SKF Explorer
Basic dynamic load rating	C	120 048 lbf
Basic static load rating	C_0	156 242 lbf
Fatigue load limit	P_u	15 961 lbf
Reference speed		2 600 r/min
Limiting speed		3 400 r/min
Limiting value	e	0.28
Calculation factor	Y_1	2.4
Calculation factor	Y_2	3.6
Calculation factor	Y_0	2.5

Tolerances of run-out

Range of section height at inner ring of assembled bearing	t_{Kia}	6 µm
Maximum run-out of inner ring side face to the bore	t_{Sd}	9 µm
Range of section height at outer ring of assembled bearing	t_{Kea}	15 µm
Perpendicularity of outer ring outside surface	t_{SD}	5.5 µm
ISO tolerance class for geometrical tolerances		P5

Radial internal clearance

Minimum initial clearance	0.0039 in
Maximum initial clearance	0.0053 in

Tolerances and clearances

GENERAL BEARING SPECIFICATIONS

- Tolerances: Normal, P6, P5,
  tapered bore 1:12, tapered bore 1:30
- Radial internal clearance: cylindrical bore, tapered bore

BEARING INTERFACES

- Seat tolerances for standard conditions
- Tolerances and resultant fit

Compatible products

Recommended product

Withdrawal sleeve, basic design, ISO standards	AHX 3124
Adapter sleeve with KMFE lock nut, metric dimensions	H 2324 E
Adapter sleeve with KMFE lock nut, metric dimensions	H 2324 EH
Adapter sleeve with KM lock nut and MB lock washer, metric dimensions	H 2324 L
Adapter sleeve with KM lock nut and MB lock washer, metric dimensions	H 3124

More Information

Product details

- Designs and variants
- General bearing specifications
- Loads
- Temperature limits
- Permissible speed
- Design considerations
- Mounting
- Designation system

Engineering information

- Principles of rolling bearing selection
- General bearing knowledge
- Bearing selection process
- Bearing failure and how to prevent it

Tools

- SimPro Quick
- SKF Product select - Select and evaluate bearing
- SKF Product select - Combine housing with bearing
- LubeSelect for SKF greases
- Drive-up Method Program
- Heater selection tool
- Oil Injection Method Program
- Tool and Accessory Selector for sleeves and shafts

Terms of use

By accessing and using this website / app owned and published by AB SKF (publ.) (556007-3495 · Gothenburg) ("SKF"), you agree to the following terms and conditions:

Warranty Disclaimer and Limitation of Liability

Although every care has been taken to assure the accuracy of the information on this website / app, SKF provides this information "AS IS" and DISCLAIMS ALL WARRANTIES, EXPRESS OR IMPLIED, INCLUDING, BUT NOT LIMITED TO, IMPLIED WARRANTIES OF MERCHANTABILITY AND FITNESS FOR A PARTICULAR PURPOSE. You acknowledge that your use of this website / app is at your sole risk, that you assume full responsibility for all costs associated with use of this website / app, and that SKF shall not be liable for any direct, incidental, consequential, or indirect damages of any kind arising out of your access to, or use of the information or software made available on this website / app.

Any warranties and representations in this website / app for SKF products or services that you purchase or use will be subject to the agreed upon terms and conditions in the contract for such product or service.

Further, for non-SKF websites / apps that are referenced in our website / app or where a hyperlink appears, SKF makes no warranties concerning the accuracy or reliability of the information in these websites / apps and assumes no responsibility for material created or published by third parties contained therein. In addition, SKF does not warrant that this website / app or these other linked websites / apps are free from viruses or other harmful elements.

Third Party Services

When viewing YouTube content via the SKF website(s) (i.e. using YouTube API Services), you agree to be bound by the YouTube Terms of Service.

Copyright

Copyright in this website / app copyright of the information and software made available on this website / app rest with SKF or its licensors. All rights are reserved. All licensed material will reference the licensor that has granted SKF the right to use the material. The information and software made available on this website / app may not be reproduced, duplicated, copied, transferred, distributed, stored, modified, downloaded or otherwise exploited for any commercial use without the prior written approval of SKF. However, it may be reproduced, stored and downloaded for use by individuals without prior written approval of SKF. Under no circumstances may this information or software be supplied to third parties.

This website /app includes certain images used under license from Shutterstock, Inc.

Trademarks and Patents

All trademarks, brand names, and corporate logos displayed on the website / app are the property of SKF or its licensors, and may not be used in any way without prior written approval by SKF. All licensed trademarks published on this website / app reference the licensor that has granted SKF the right to use the trademark. Access to this website / app does not grant to the user any license under any patents owned by or licensed to SKF.

Changes

SKF reserves the right to make changes or additions to this website / app at any time.