The Timken Company
4500 Mt Pleasant St. NW
N. Canton, OH 44720
Phone: (234) 262-3000
E-Mail: CustomerCAD@timken.com • **Web site:** www.timken.com

Part Number 22214EMW33C3, Spherical Roller Bearings - Brass Cage

Spherical bearings are designed to manage high radial loads even when misalignment, poor lubrication, contamination, extreme speeds or critical application stresses are present.

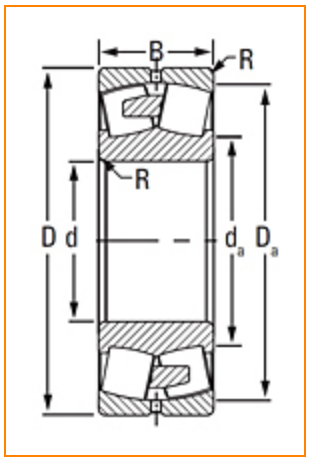

Specifications | Dimensions | Abutment and Fillet Dimensions | Basic Load Ratings | Factors

Specifications

Design Unit	Metric
d - Bore	70 mm
Cage Type	EM
Cage Material	Brass
Superseded Part	22214YMW33C3

Dimensions

D - Outer Diameter	125 mm 4.9213 in
B - Inner Ring Width	31 mm 1.2205 in

B - Outer Ring Width	31 mm 1.2205 in

Abutment and Fillet Dimensions

R - Inner Ring "To Clear" Radius[1]	1.5 mm 0.060 in
r - Outer Ring "To Clear" Radius[2]	1.5 mm 0.06 in
da - Inner Ring Backing Diameter	84 mm 3.300 in
Da - Outer Ring Backing Diameter	114.000 mm 4.500 in

Basic Load Ratings

C0 - Static Radial Rating	219000 N 49200 lbf
C1(2) - Dynamic Radial Rating (Two-Rows)	205000 N 46000 lbf

Factors

e - ISO Factor[3]	0.23
Y0 - ISO Factor[4]	2.84
Y1 - ISO Factor[5]	2.9
Y2 - ISO Factor[6]	4.32
Reference Thermal Speed Rating (Grease)	4000 rpm
Reference Thermal Speed Rating (Oil)[7]	4900 rpm

Cg - Geometry Factor[8]	0.0552

[1] Maximum housing fillet radius that bearing corners will clear.
[2] Maximum shaft fillet radius that bearing corners will clear.
[3] These factors apply for both inch and metric calculations. Consult your Timken representative for instruction on use.
[4] These factors apply for both inch and metric calculations. See engineering
[5] These factors apply for both inch and metric calculations. Consult your Timken representative for instruction on use.
[6] These factors apply for both inch and metric calculations. Consult your Timken representative for instruction on use.
[7] See thermal speed ratings in the engineering section.
[8] Geometry constant for Lubrication Life Adjustment Factor a3l.

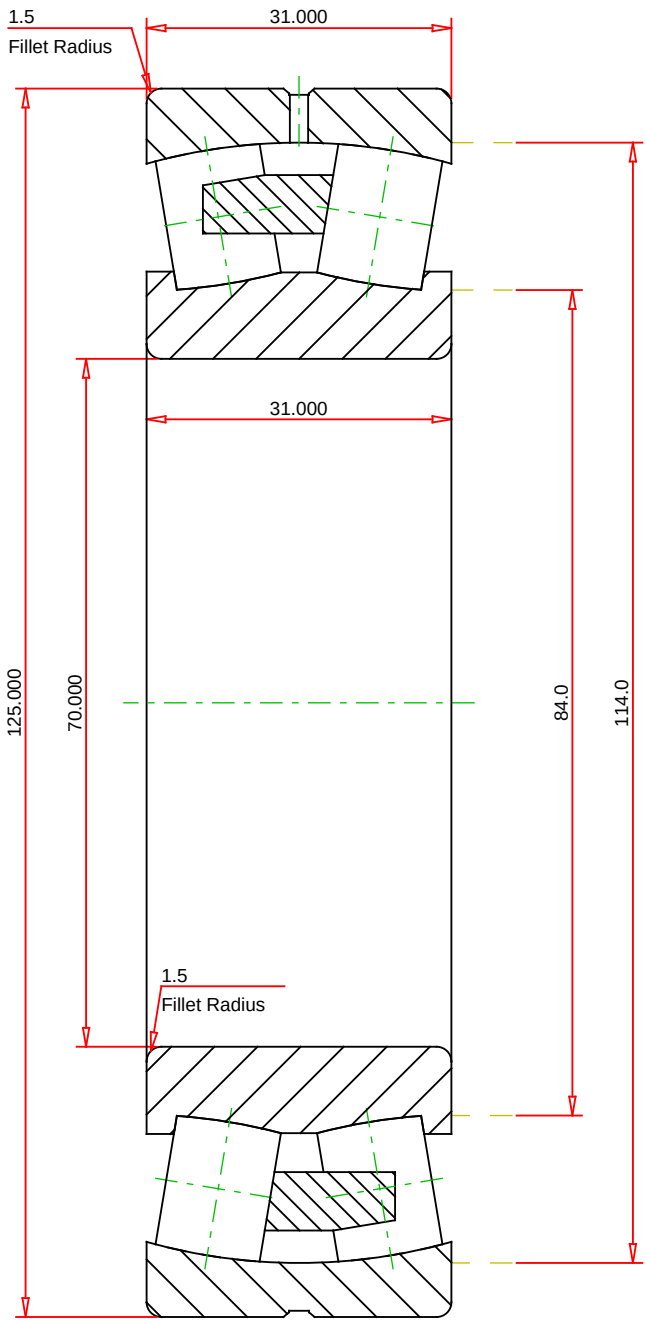

METRIC UNITS

Number of Rollers Per Row	19	
ISO Factor e	0.23	
ISO Factor Y0	2.84	
ISO Factor Y1	2.90	
ISO Factor Y2	4.32	
Bearing Weight	1.6	kg
Cage Type	EM	
Cage Material	Brass	

TIMKEN®

THE TIMKEN COMPANY
NORTH CANTON, OHIO USA

22214EMW33C3
SRB ASSEMBLY

Dynamic Radial Rating (Two Rows)	205000	N
Static Radial Rating	219000	N

Every reasonable effort has been made to ensure the accuracy of the information contained in this writing, but no liability is accepted for errors, omissions or for any other reason.

FOR DISCUSSION ONLY