The Timken Company
4500 Mt Pleasant St. NW
N. Canton, OH 44720
Phone: (234) 262-3000
E-Mail: CustomerCAD@timken.com • **Web site:** www.timken.com

Part Number 22230KEJW33W40IC4, Spherical Roller Bearings - Steel Cage

W40i is Cc inner ring, else similar, Diff clearance



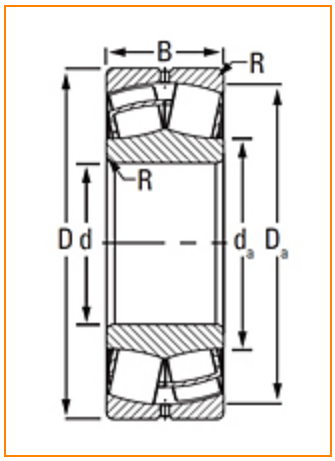

Specifications | Factors | Dimensions | Abutment and Fillet Dimensions | Basic Load Ratings

Specifications

UPC Code	087796169456
Design Unit	Metric
d - Bore	150 mm
Lubrication Type	Standard Grease
Bore_Taper	1/12
Cage Type	EJ
Cage Material	Steel
Superseded Part	22230KCJW33C3

Factors

e - ISO Factor[1]	0.25
Y0 - ISO Factor[2]	2.63
Y1 - ISO Factor[3]	2.69
Y2 - ISO Factor[4]	4
Reference Thermal Speed Rating (Grease)	2000 rpm
Reference Thermal Speed Rating (Oil)[5]	2400 rpm
Cg - Geometry Factor[6]	0.0899

Dimensions

D - Outer Diameter	270 mm 10.6299 in
B' - Inner Ring Width	73 mm 2.874 in
B - Outer Ring Width	73 mm 2.8740 in

Abutment and Fillet Dimensions

R - Inner Ring "To Clear" Radius[7]	2.5 mm 0.100 in
r - Outer Ring "To Clear" Radius[8]	2.5 mm 0.1 in
da - Inner Ring Backing Diameter	179 mm 7.0000 in
Da - Outer Ring Backing Diameter	246 mm 9.7000 in

Basic Load Ratings

C0 - Static Radial Rating	1230000 N 276000 lbf
C1(2) - Dynamic Radial Rating (Two-Rows)	1000000 N 225000 lbf

[1] These factors apply for both inch and metric calculations. Consult your Timken representative for instruction on use.

[2] These factors apply for both inch and metric calculations. See engineering

[3] These factors apply for both inch and metric calculations. Consult your Timken representative for instruction on use.

[4] These factors apply for both inch and metric calculations. Consult your Timken representative for instruction on use.

[5] See thermal speed ratings in the engineering section.

[6] Geometry constant for Lubrication Life Adjustment Factor a3l.

[7] Maximum housing fillet radius that bearing corners will clear.

[8] These maximum fillet radii will be cleared by the bearing corners.

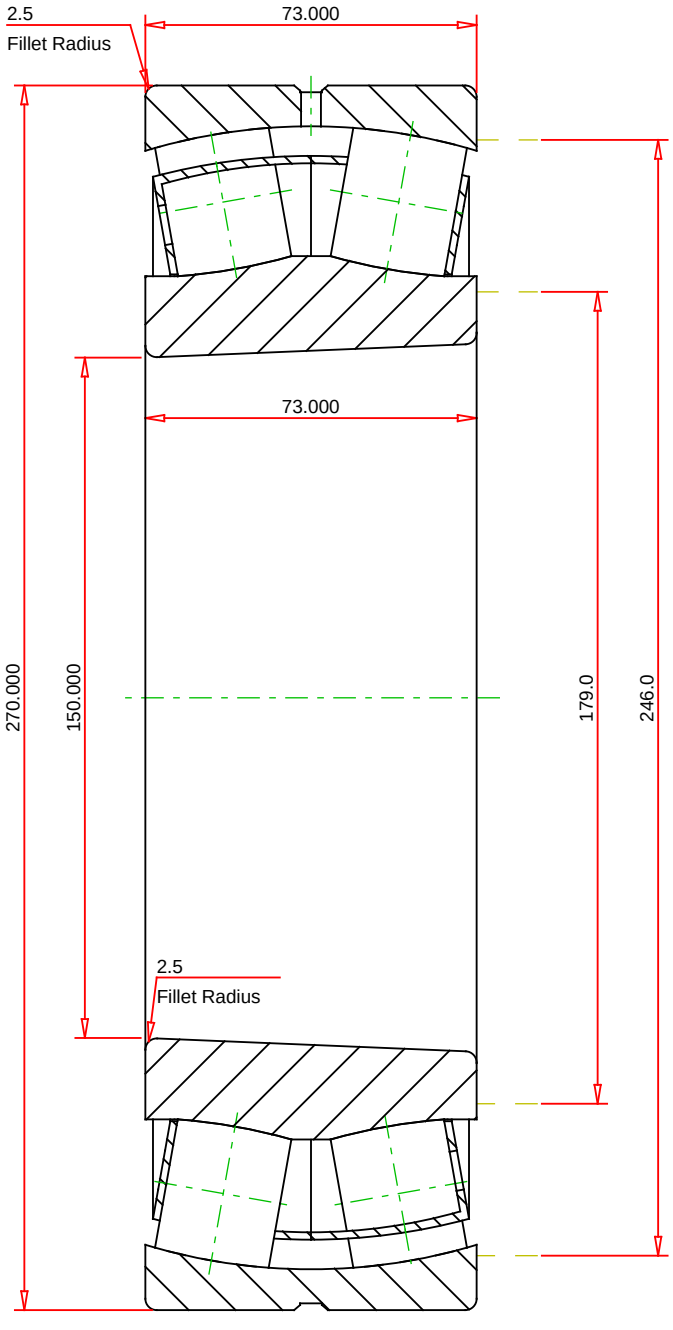

METRIC UNITS

Number of Rollers Per Row	19	
ISO Factor e	0.25	
ISO Factor Y0	2.63	
ISO Factor Y1	2.69	
ISO Factor Y2	4.00	
Bearing Weight		kg
Cage Type	EJ	
Cage Material	Steel	
Bore Taper	1/12	

TIMKEN®

THE TIMKEN COMPANY
NORTH CANTON, OHIO USA

22230KEJW33W40IC4
SRB ASSEMBLY

Dynamic Radial Rating (Two Rows)	1000000	N
Static Radial Rating	1230000	N

Every reasonable effort has been made to ensure the accuracy of the information contained in this writing, but no liability is accepted for errors, omissions or for any other reason.

FOR DISCUSSION ONLY