The Timken Company
4500 Mt Pleasant St. NW
N. Canton, OH 44720
Phone: (234) 262-3000
E-Mail: CustomerCAD@timken.com • **Web site:** www.timken.com

Part Number 23022EJW33C3, Spherical Roller Bearings - Steel Cage

Spherical bearings are designed to manage high radial loads even when misalignment, poor lubrication, contamination, extreme speeds or critical application stresses are present.

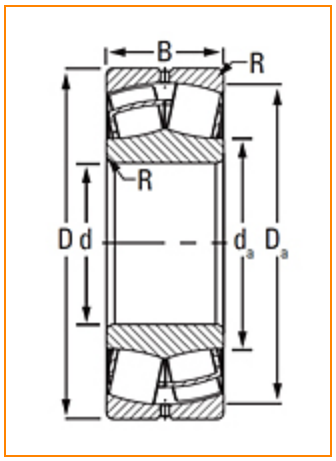

Specifications | Factors | Dimensions | Abutment and Fillet Dimensions | Basic Load Ratings

Specifications

UPC Code	087796169432
Design Unit	Metric
d - Bore	110 mm
Lubrication Type	Standard Grease
Cage Type	EJ
Cage Material	Steel
Superseded Part	23022CJW33C3

Factors

e - ISO Factor[1]	0.23

Y0 - ISO Factor[2]	2.84
Y1 - ISO Factor[3]	2.9
Y2 - ISO Factor[4]	4.32
Reference Thermal Speed Rating (Grease)	2900 rpm
Reference Thermal Speed Rating (Oil)[5]	3600 rpm
Cg - Geometry Factor[6]	0.0707

Dimensions

D - Outer Diameter	170 mm 6.6929 in
B' - Inner Ring Width	45 mm 1.7717 in
B - Outer Ring Width	45 mm 1.7717 in

Abutment and Fillet Dimensions

R - Inner Ring "To Clear" Radius[7]	2 mm 0.080 in
r - Outer Ring "To Clear" Radius[8]	2 mm 0.08 in
da - Inner Ring Backing Diameter	125 mm 4.9000 in
Da - Outer Ring Backing Diameter	158.0 mm 6.200 in

Basic Load Ratings

C0 - Static Radial Rating	534000 N 120000 lbf
C1(2) - Dynamic Radial Rating (Two-Rows)	391000 N 88000 lbf

[1] These factors apply for both inch and metric calculations. Consult your Timken representative for instruction on use.
[2] These factors apply for both inch and metric calculations. See engineering
[3] These factors apply for both inch and metric calculations. Consult your Timken representative for instruction on use.
[4] These factors apply for both inch and metric calculations. Consult your Timken representative for instruction on use.
[5] See thermal speed ratings in the engineering section.
[6] Geometry constant for Lubrication Life Adjustment Factor a3l.
[7] Maximum housing fillet radius that bearing corners will clear.
[8] These maximum fillet radii will be cleared by the bearing corners.

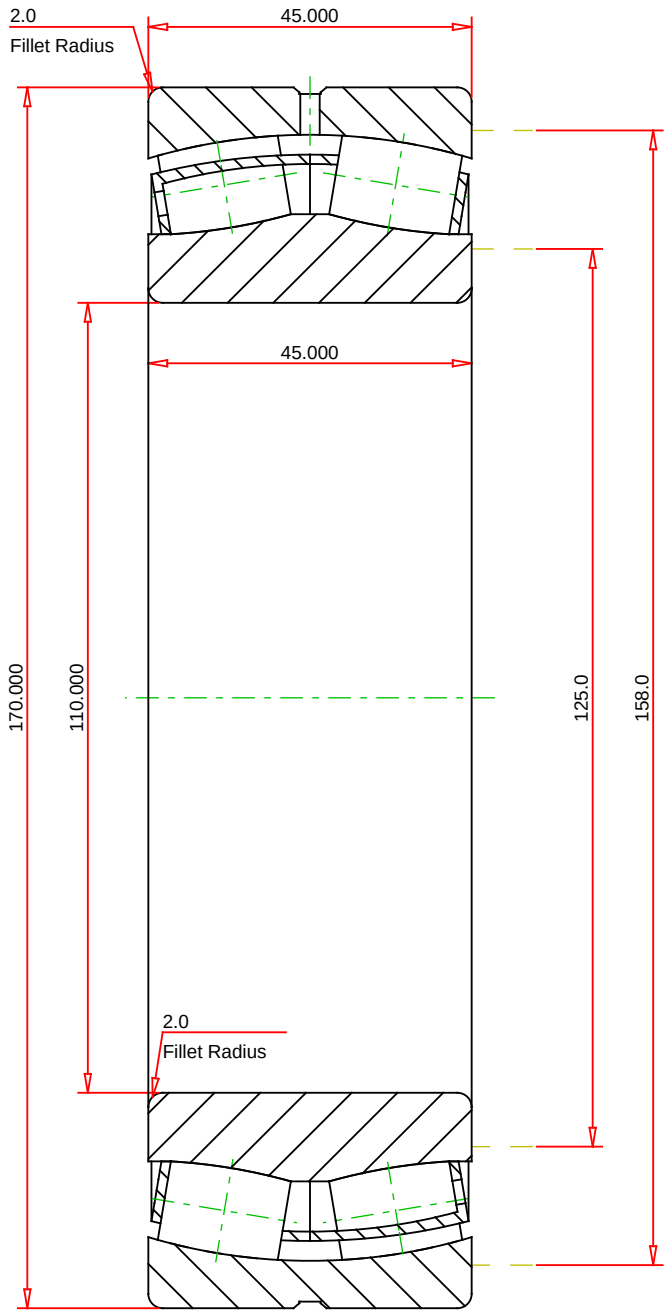

METRIC UNITS

Number of Rollers Per Row	25	
ISO Factor e	0.23	
ISO Factor Y0	2.84	
ISO Factor Y1	2.90	
ISO Factor Y2	4.32	
Bearing Weight		kg
Cage Type	EJ	
Cage Material	Steel	

TIMKEN®

THE TIMKEN COMPANY
NORTH CANTON, OHIO USA

23022EJW33C3
SRB ASSEMBLY

Dynamic Radial Rating (Two Rows)	391000	N
Static Radial Rating	534000	N

Every reasonable effort has been made to ensure the accuracy of the information contained in this writing, but no liability is accepted for errors, omissions or for any other reason.

FOR DISCUSSION ONLY