The Timken Company
4500 Mt Pleasant St. NW
N. Canton, OH 44720
Phone: (234) 262-3000
E-Mail: CustomerCAD@timken.com • **Web site:** www.timken.com

Part Number 23234EJW33C3, Spherical Roller Bearings - Steel Cage

Spherical bearings are designed to manage high radial loads even when misalignment, poor lubrication, contamination, extreme speeds or critical application stresses are present.

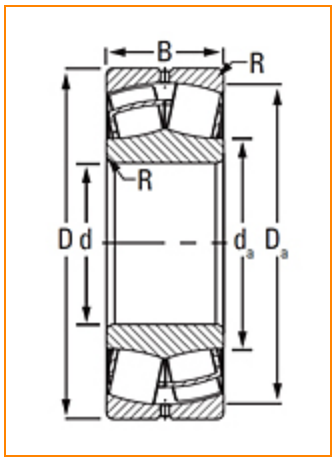

Specifications | Factors | Dimensions | Abutment and Fillet Dimensions | Basic Load Ratings

Specifications

UPC Code	087796356399
Design Unit	Metric
d - Bore	170 mm
Lubrication Type	Standard Grease
Cage Type	EJ
Cage Material	Steel
Superseded Part	23234CJW33C3

Factors

e - ISO Factor[1]	0.33

Y0 - ISO Factor[2]	2.03
Y1 - ISO Factor[3]	2.08
Y2 - ISO Factor[4]	3.09
Reference Thermal Speed Rating (Grease)	1100 rpm
Reference Thermal Speed Rating (Oil)[5]	1200 rpm
Cg - Geometry Factor[6]	0.0909

Dimensions

D - Outer Diameter	310 mm 12.2047 in
B' - Inner Ring Width	110 mm 4.3307 in
B - Outer Ring Width	110 mm 4.3307 in

Abutment and Fillet Dimensions

R - Inner Ring "To Clear" Radius[7]	3 mm 0.120 in
r - Outer Ring "To Clear" Radius[8]	3 mm 0.12 in
da - Inner Ring Backing Diameter	202 mm 8.0000 in
Da - Outer Ring Backing Diameter	281 mm 11.1000 in

Basic Load Ratings

C0 - Static Radial Rating	2200000 N 494000 lbf
C1(2) - Dynamic Radial Rating (Two-Rows)	1660000 N 373000 lbf

[1] These factors apply for both inch and metric calculations. Consult your Timken representative for instruction on use.
[2] These factors apply for both inch and metric calculations. See engineering
[3] These factors apply for both inch and metric calculations. Consult your Timken representative for instruction on use.
[4] These factors apply for both inch and metric calculations. Consult your Timken representative for instruction on use.
[5] See thermal speed ratings in the engineering section.
[6] Geometry constant for Lubrication Life Adjustment Factor a3l.
[7] Maximum housing fillet radius that bearing corners will clear.
[8] These maximum fillet radii will be cleared by the bearing corners.

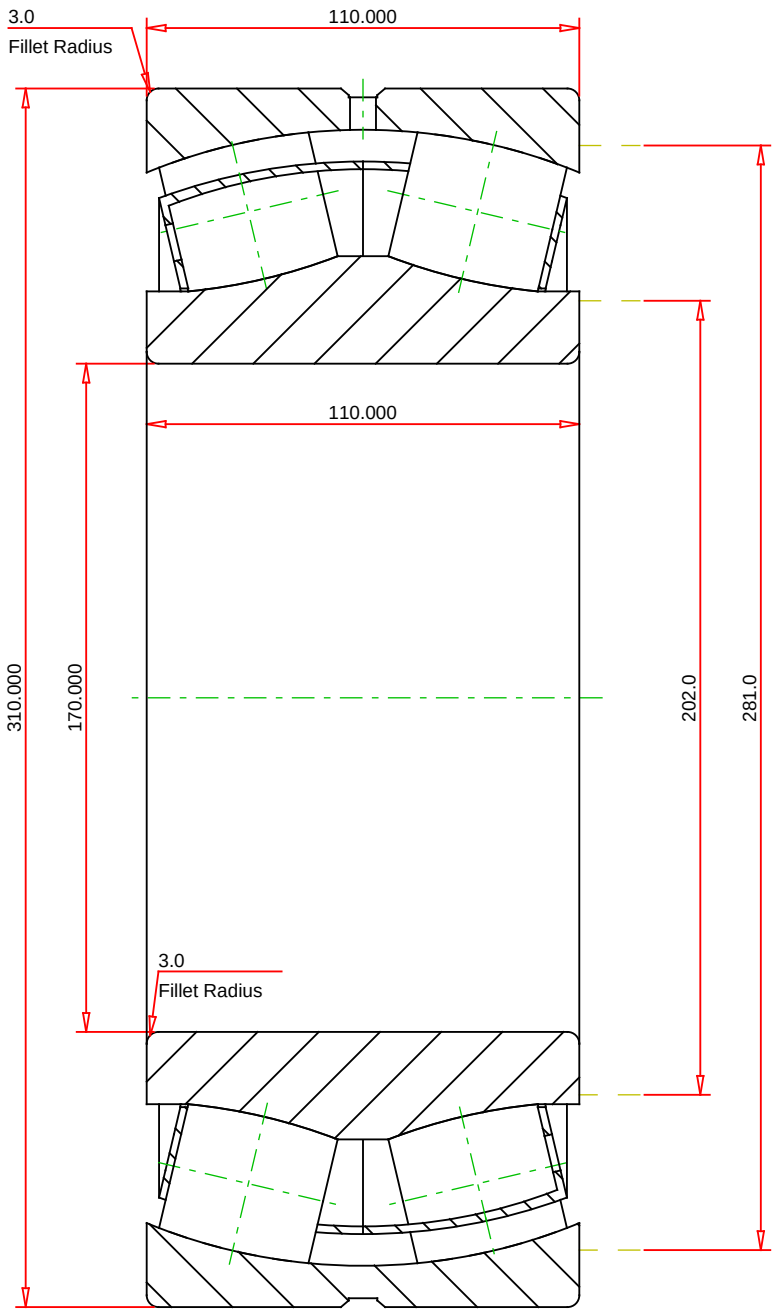

METRIC UNITS

Number of Rollers Per Row	19	
ISO Factor e	0.33	
ISO Factor Y0	2.03	
ISO Factor Y1	2.08	
ISO Factor Y2	3.09	
Bearing Weight		kg
Cage Type	EJ	
Cage Material	Steel	

TIMKEN®

THE TIMKEN COMPANY
NORTH CANTON, OHIO USA

23234EJW33C3
SRB ASSEMBLY

Dynamic Radial Rating (Two Rows)	1660000	N
Static Radial Rating	2200000	N

Every reasonable effort has been made to ensure the accuracy of the information contained in this writing, but no liability is accepted for errors, omissions or for any other reason.

FOR DISCUSSION ONLY