The Timken Company
4500 Mt Pleasant St. NW
N. Canton, OH 44720
Phone: (234) 262-3000
E-Mail: CustomerCAD@timken.com • **Web site:** www.timken.com

Part Number 24020EJW33C4, Spherical Roller Bearings - Steel Cage

Spherical bearings are designed to manage high radial loads even when misalignment, poor lubrication, contamination, extreme speeds or critical application stresses are present.

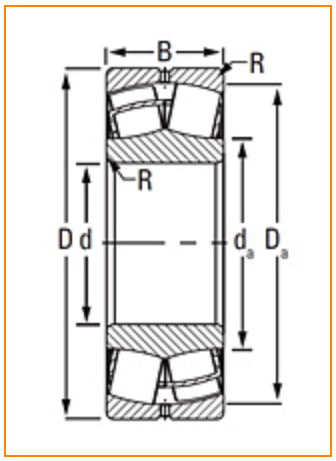

Specifications | Factors | Dimensions | Abutment and Fillet Dimensions | Basic Load Ratings

Specifications

UPC Code	087796245174
Design Unit	Metric
d - Bore	100 mm
Lubrication Type	Standard Grease
Cage Type	EJ
Cage Material	Steel
Superseded Part	24020CJW33C4

Factors

e - ISO Factor[1]	0.29

Y0 - ISO Factor[2]	2.26
Y1 - ISO Factor[3]	2.32
Y2 - ISO Factor[4]	3.45
Reference Thermal Speed Rating (Grease)	2700 rpm
Reference Thermal Speed Rating (Oil)[5]	3200 rpm
Cg - Geometry Factor[6]	0.065

Dimensions

D - Outer Diameter	150 mm 5.9055 in
B' - Inner Ring Width	50 mm 1.9685 in
B - Outer Ring Width	50 mm 1.9685 in

Abutment and Fillet Dimensions

R - Inner Ring "To Clear" Radius[7]	1.5 mm 0.060 in
r - Outer Ring "To Clear" Radius[8]	1.5 mm 0.06 in
da - Inner Ring Backing Diameter	111 mm 4.400 in
Da - Outer Ring Backing Diameter	139.000 mm 5.500 in

Basic Load Ratings

C0 - Static Radial Rating	506000 N 114000 lbf
C1(2) - Dynamic Radial Rating (Two-Rows)	352000 N 79100 lbf

[1] These factors apply for both inch and metric calculations. Consult your Timken representative for instruction on use.
[2] These factors apply for both inch and metric calculations. See engineering
[3] These factors apply for both inch and metric calculations. Consult your Timken representative for instruction on use.
[4] These factors apply for both inch and metric calculations. Consult your Timken representative for instruction on use.
[5] See thermal speed ratings in the engineering section.
[6] Geometry constant for Lubrication Life Adjustment Factor a3l.
[7] Maximum housing fillet radius that bearing corners will clear.
[8] These maximum fillet radii will be cleared by the bearing corners.

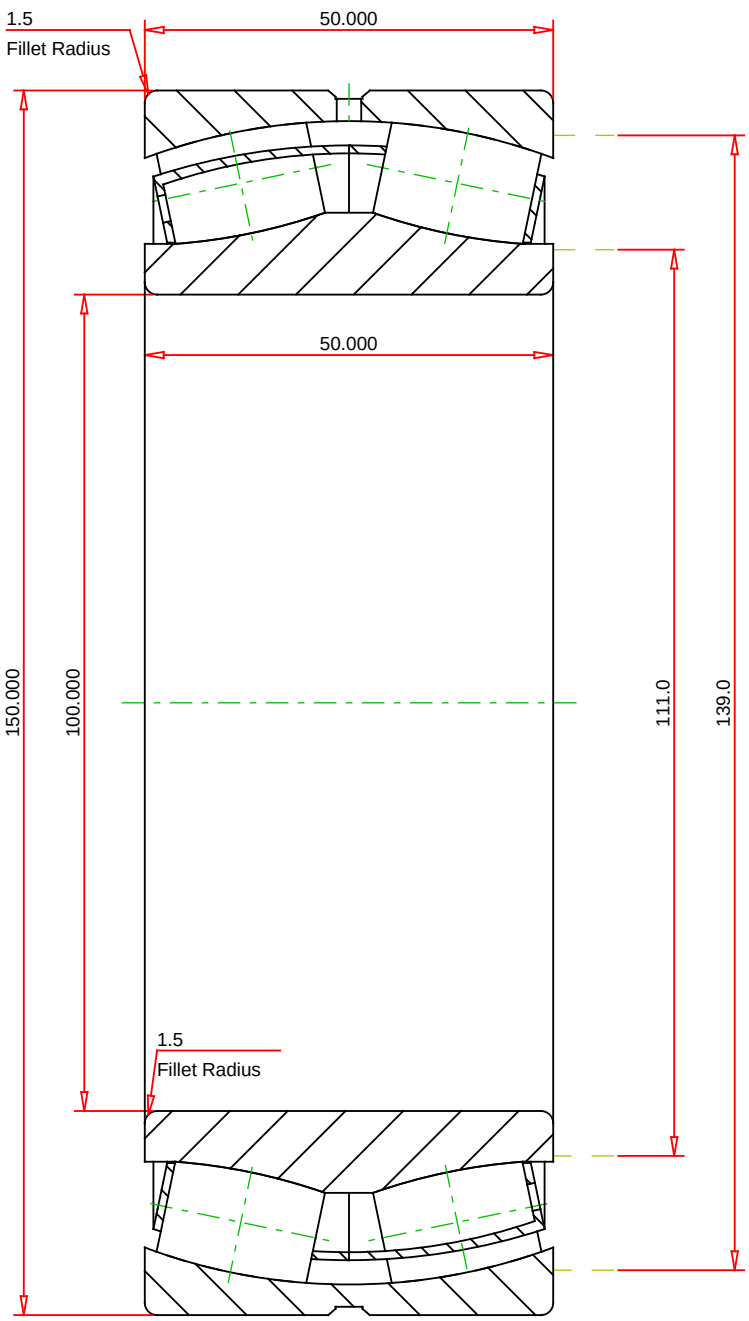

METRIC UNITS

Number of Rollers Per Row	23	
ISO Factor e	0.29	
ISO Factor Y0	2.26	
ISO Factor Y1	2.32	
ISO Factor Y2	3.45	
Bearing Weight		kg
Cage Type	EJ	
Cage Material	Steel	

TIMKEN®

THE TIMKEN COMPANY
NORTH CANTON, OHIO USA

24020EJW33C4
SRB ASSEMBLY

Dynamic Radial Rating (Two Rows)	352000	N
Static Radial Rating	506000	N

Every reasonable effort has been made to ensure the accuracy of the information contained in this writing, but no liability is accepted for errors, omissions or for any other reason.

FOR DISCUSSION ONLY