6677 FRANK AVE. NW • NORTH CANTON, OH 44720 • PH:330.493.3722

Coshocton Port Authority
Coshocton Collaborative

Addendum No. 1 – 19.137

December 4th 2023

This Addendum shall hereby be and become a part of the Contract Documents the same as if originally bound thereto. The following clarifications, amendments, revisions, changes and modifications change the original Contract Documents only in the amount and to the extent hereinafter specified in this Addendum. Each bidder shall acknowledge receipt of this Addendum in his bid proposal. Bidders shall be responsible for becoming familiar with every item of this Addendum.

GENERAL:

1. **The bid date has been extended. Sealed bids for the Coshocton Port Authority – Coshocton Collaborative will be received at 534 Main St, Coshocton, OH 43812 in the Lobby until 4:00pm local time, on December 19th, 2023. Bids will be publicly opened and read in the Coshocton Community Room located at 637 Chestnut St, Coshocton, OH 43812 at 8:00am local time, on December 20th, 2023.**

2. Pre bid meeting agenda and sign in sheet attached.

3. Original MEP drawings attached for reference.

RFI:

GENERAL RFI:

1. Where is the parking and unloading area during construction?
   The parking lot along the west side of the theater.

2. Are the permit fees with the building permit or paid separately?
   Plan review fees will be covered by the owner for drawings plan review. Any inspection fees to be covered by the contractor and included in the bid.

3. Is there any known asbestos in the building?
   Asbestos was abated in a previous phase earlier this year.

4. Is there any lead paint in the building?
   Lead paint was not tested for on this project. Removal would not be required.

ARCHITECTURAL RFI:

1. The door hardware specification includes a page for Cleveland Vicon with contact information. Is Cleveland Vicon a preferred or mandatory vender for this project? Please clarify.
   Cleveland Vicon helped to prepare the specifications. They are not a mandatory vendor.

2. Sheet 3.3 sections 1 and 2 read “sidewalk, see civil”, but I do not see any civil drawings included. Please advise.
   Sidewalk is existing. There are no civil drawings.

3. Please clarify if wall type P is new masonry wall or existing. It reads as new on sheet 4.0 but the walls labeled appear to be existing.
   Wall Type “P” is existing shown as reference for the building department.

6677 FRANK AVE. NW • NORTH CANTON, OH 44720 • PH:330.493.3722

4. Please clarify the area limits of snow removal required per spec section 015000 1.21. Also, please define the amount snow removals required since this is not clear foreseeable item.
   Snow removal only applies to areas in the scope of the project such as the frost slabs in front of the building. The intent is to clarify that the contractor is responsible for snow removal if required in their means and methods.

5. Please clarify if the wall and door between C203 and C201 shown dashed on sheet 2.3 is to be removed. There isn't an associated code note but it is shown dashed.
   Yes, dashed wall and door between C203 and C201 to be removed.

6. There are notes on the drawings that call to repair the existing roof deck as needed. This is very difficult to quantify for bidding purposes. Could this be handled by an allowance, or can a quantity be provided for all bidders to include?
   Bidders to assume 800sf of existing rood deck need to be repaired.

7. Please clarify the extent of the new 4" slab concrete sidewalk as shown on sheet 14.3.
   Dimension is now shown. See 14.3

8. Please confirm that the foundations for the exterior stairs shown on 14.3 should be figured at 3'-0" below existing grade. The details call for minimum 3'-0" but I do not see further information directing these to be any deeper.
   New exterior stair foundations shall extend a minimum of 3'-0" below existing grade.

9. Stair E (all floors) call for new paint per the finish schedule, but it is not clear if we are to prep and paint the existing surfaces or will another finish, such as drywall, be applied over the existing. Please advise.
   Existing surfaces to remain. Prep, prime and paint.

10. Many of the floor plan notes (on sheet 4.2 in example) refer to concrete masonry units as if new, but I do not see where there are new masonry units called for. Please advise.
    Concrete Masonry Units are used in frost slab foundations. Refer to structural.

FIRE SUPPRESSION RFI:

1. Are there any drawings of the existing sprinkler system?
   We have no record of the existing sprinkler design drawings from the sprinkler contractor. We will attach the original design drawings, but they are not the final contractor installation documents.

2. Will all the existing piping be hydrostatically tested to 200psi?
   System to be tested by the contractor. Annotations to this will be added under Addendum #1.

3. What are we to do with the system in the areas of "NO WORK"? There is piping ran in all these areas.
   Any sprinkler/fire protection mains that are extended to the areas not included in the scope shall have a valve installed to close-off the downstream system for fitout under a future phase. Additional notation will be added under Addendum #1.

4. The existing piping is too low for the 8'-6" ceiling height on the second floor. Does this all get removed and re-piped? Has height been checked in all the other areas?
   The sprinkler piping will be exposed on the 2nd floor. On the second floor a layer of drywall will installed over the current ceiling. Some hangers and piping may need to be removed and reinstalled for ceiling installation, but the sprinkler piping will remain below the ceiling.

5. You list QR, Fusible link heads in the spec. Can these be glass bulb type? What finish do you want?

6677 FRANK AVE. NW • NORTH CANTON, OH 44720 • PH:330.493.3722

Glass bulb type is acceptable. We have semi-recess type specified for suspended or drywall ceilings and walls and pendant type for exposed areas.

6. What is the expected warranty for existing equipment?
   After the project completion all new equipment should be warranted as typical for one year from the substantial completion date along with the operation of the associated system (piping and ductwork). Existing equipment would assumed to be past any manufacturer warranty even though this is the first startup.

PLUMBING RFI:

1. The drawings have a note that dark dashed lines are to be removed. This is shown around the sump pump, sewage pump, water heater, mixing valve, and water service. Are we to remove all these items? The only item for replacement is an alternate for the water heater. What are we to do for the other items?
   The only replacement under the design is the water heater under the alternate. The boxed outlines are simply view callouts to the pictures at the top of the sheet. If any other equipment is found to be non- operation during construction, it will need to be replaced under a change order.

2. You have a note that all piping is being reviewed and tested. When will we know the results. Are we to prepare our prices based on all piping systems holding a test?
   Testing of the existing systems and equipment will now be added to this base project. Annotations explaining this are being added under Addendum #1.

3. The drawing states soldered fittings for the water piping. The specifications list ProPress fittings as an option. Is ProPress acceptable?
   Currently soldered fittings are to be used.

4. The alternate #3 for the water heater will use PVC piping for the vent. The detail for the water heater states the Mechanical Contractor is to install the vent. Is the vent part of the Plumbing or Mechanical? Where is this to be vented?
   Under the mechanical contractor scope, existing routing for flue to be reused for any new unit.

5. The Plumbing permit will go through Muskingum County Health Department not Mid East Ohio Building Department. Have plans been submitted to the Health Department?
   The plans will be submitted for plan review by the architect.

6. I think I saw roof drain piping during the walk through. Will this be tested? Do we need to include the roof drains in the plumbing permit? There is no roof drains shown on the plumbing plans. Do you know how many and location of drains and piping?
   Roof drain piping will be existing to remain. Existing system shall be tested by the contractor, this scope to be added under Addendum #1.

7. Do you have copies of the original plumbing plans?
   See attached.

8. Are all ceiling spaces to be considered return air space?
   No. Areas are ducted return or open ceiling.

9. What is expected for warranty on all the existing systems?
   After the project completion all new equipment should be warranted as typical for one year from the substantial completion date along with the operation of the associated system (piping and ductwork). Existing equipment would assumed to be past any manufacturer warranty even though this is the first startup.

6677 FRANK AVE. NW • NORTH CANTON, OH 44720 • PH:330.493.3722

10. The second floor has a finished ceiling height of 8'-6" on the drawing. Does all the piping clear this elevation? I don't see any notes on the plumbing drawing about moving any piping for the ceiling.
The plumbing piping conflicting with the ceiling will be exposed on the 2nd floor. On the second floor a layer of drywall will installed over the current ceiling. Some hangers and piping may need to be removed and reinstalled for ceiling installation, but the plumbing will remain below the ceiling in these areas.

11. Will a plumbing inspection of the existing sanitary be performed and will it hold a test?
Yes, an inspection shall be carried out. It is our assumption that the sanitary was tested before construction stopped as the concrete was poured around underground systems, but we don't have any record of past testing.

MECHANICAL RFI:

1. The second floor has a finished ceiling height of 8'-6" on the drawing. The drawing has all the piping and main ducts remaining. The main ducts and piping will not clear this. What is the plan for this?
The ductwork and new equipment will be exposed on the 2nd floor. On the second floor a layer of drywall will be installed over the current ceiling. For all the rooms the existing HVAC equipment and ductwork will be removed to accommodate the ceiling installation. The new HVAC ductwork, piping and equipment will be reinstalled below the drywall ceiling.

2. For alternate #2 boiler replacement. You just want to replace with the same type? Not change to a higher efficient type.
For the current design, the plan would be to match like for like to minimize the amount of rework and make sure the downstream equipment meet the required performance. The existing system was based around a 200°F supply temp so the existing system may not be able to fully utilize a high efficiency condensing boiler with a 140° temp.

3. What is the condition of the existing pumps? Will they be tested?
They appear to be in good condition. All existing systems and equipment shall be tested by the contractor, this scope to be added under Addendum #1.

4. Will all the piping be tested?
All existing system shall be tested by the contractor, this scope to be added under Addendum #1.

5. What are you expecting for warranty of existing equipment?
After the project completion all new equipment should be warranted as typical for one year from the substantial completion date along with the operation of the associated system (piping and ductwork). Existing equipment would assumed to be past any manufacturer warranty even though this is the first startup.

6. I saw several temporary gas furnaces. Who is responsible for removal of these and the gas and vent piping?
All existing temp furnaces to be removed, along with associated natural gas piping. Two of the furnace demo's called out on M1.1, additional notes will be added under Addendum #1 to clarify.

7. All the ductwork has been open for several years and it is lined, should the duct be cleaned?
Yes, all existing ductwork shall be cleaned. Notation added to drawings under Addendum #1.

8. There are a few forms around HVAC equipment in the basement are they sufficient to fill with concrete?
We would recommend reviewing the forms before any concrete is poured as they were set up over 20 years ago. We have no issue with reusing the forms as they are currently laid out if they are deemed sound.

6677 FRANK AVE. NW • NORTH CANTON, OH 44720 • PH:330.493.3722

9. The HVAC call for adding VFD's to the existing pumps, do we know if the motors can accept VFD's and have the motors been test to run?
   The motors have not been tested. The motors have an insulation class F which is acceptable for VFD control.

ELECTRIC RFI:

1. There is no fire alarm specification in the bid documents, only the detail on drawing E1.3, please provide specifications.
   See Addendum #1, the fire alarm system will be new.

2. There is no DMX lighting control system specification in the bid documents, only the detail on drawing E1.3 and note on drawing E3.2, please provide specifications.
   The type CC façade light fixtures are DMX controller with an Insight Lightdial controller for DMX control. See cabling detail on sheet E1.3.

3. Is it the intent of the scope to reuse existing branch conduit, cable, wire and boxes currently installed?
   Existing service entrance equipment, feeders, and panelboards will be reused. Branch circuit wiring shall all be bid as new. It is possible that some existing branch circuit wiring could be used, these areas will be treated as credits to the owner.

4. The existing lighting rough-in on the second and third floor is currently run to the 480/277V panel on the second floor. All lighting circuits on the drawings are shown to be fed from 208/120V panels. Is it the intent of this scope to demo all existing home runs to the 480/277V panel and change them to 208/120V panels and update circuit numbers to match the current drawings?
   Yes, existing branch circuit wiring is not intended to be reused. Unless otherwise noted, all branch circuit wiring will be new.

5. There is currently a branch Panel D2, not shown on the drawings or one-line, that is located at the northeast side of the first floor conference room 108. This panel has a line side feed to it and is built into a small wing wall. Is this panel and feed to remain or be removed?
   Unless otherwise noted, all existing feeders and panels will remain.

6. Existing panels L1A-R & L1A-L are currently installed at approximately 4 1/2' to the top of the panel. Specification 262416 3.1.D states that panelboards are to be 6' to the top of the panel. Are these panels to be moved to 6' to the top?
   Existing panelboards will be existing to remain, no modifications will be required unless the panelboards do not meet the National Electrical Code for clearances. New panelboards will be mounted per the specifications.

7. Are there any testing requirements for currently installed electrical systems, equipment and wiring that is existing to remain and reuse?

   Existing service entrance wiring and feeders are to have an insulation resistance test (megger test) conducted by the EC to verify suitable condition of the cables for reuse. It is assumed that existing service entrance conductors and feeders will be in acceptable condition and that the insulation is not damaged.

8. What will be the warranty expectation for currently installed electrical systems, equipment and wiring that is existing to remain and reuse?
   There are no warranty expectations for existing equipment that is being reused. Service entrance conductors and feeders will be tested to ensure acceptable conditions.

9. On sheet E2.1 keynote 5 and wanted to verify that all the keynote 5's are existing and the pipe and wire is complete for these mechanical and plumbing equipment?
   For mechanical and plumbing equipment noted with plan note #5, assume the branch circuit wiring (conduit and wire) is installed.

10. On sheet E4.1 it only shows one feeder being a dashed line for Alternate-1. It is assumed all feeders are piped and wired pulled and terminated .
    Correct, assume all service entrance conductors and feeders are installed. EC is to conduct a insulation resistance test on all service entrance conductors and feeders that are to be reused.

11. Are all disconnects / equipment for mechanical and plumbing existing? Nothing on electrical plans showing new disconnects other thn a 200 amp and (2)-30 amp disconnects.
    Unless otherwise noted, the disconnect switch for mechanical and plumbing equipment is either existing to remain or provided with the equipment.

12. At the walk through yesterday, it looked as if all the fire alarm cabling for devices were existing, should we only price the devices and install devices and programming and the new booster panel?
    See Addendum #1, fire alarm system will be NEW.

13. Are all the data devices to be routed and terminated on the 2nd floor? Is the data rack and data equipment existing or provided by others?
    Yes, all data cables to be routed and terminated on the 2nd floor. The data rack and patch panels will be provided by others.

14. What are the expectations with existing branch circuits that may be sharing neutrals? Any information on the breaker types for the panels needing breakers would be helpful as well. Panel LBB-R, LBB-L, AB-2. L3A, H2, AND L1A-L all need some new breakers and for the suppliers to quote properly they need the type.
    LBB-L – Cutler Hammer PRL1A 225a Panelboard, Job #HCB17814 017
    LBB-R – Cutler Hammer PRL1A 225a Panelboard, Job #HCB17814 018
    L1A-L – Cutler Hammer PRL1A 225a Panelboard, Job #HCB17814 008
    H2 – Cutler Hammer PRL1A 225a Panelboard, Job #HCB17814 020

SPECIFICATIONS:

1. 05 58 00 Formed Metal Fabrications – Specification has been removed from project.

2. 06 43 00 Wood Stairs and Railings – Revised to add aluminum nosing in 2.4.E.

3. 09 30 13 Ceramic Tile – Revised to show basis of design and alternate manufacturers in 2.3 B.1.a.

4. 09 65 19 Resilient Tile Flooring – Revised to show basis of design and alternate manufacturers in 2.2.A.

5. 09 68 13 Tile Carpeting – Revised to show basis of design and alternate manufacturers in 2.1.A.

6. 10 51 13 FL Metal Lockers – New section added to replace wood lockers.

7. 10 51 16 Wood Lockers – Removed from the project manual in lieu of metal lockers.

8. 12 36 19 Wood Countertops – Added Hickory Solid Wood and Laminate in 2.1.D.

9. 28 31 00 Fire Detection & Alarm – Specification added.

10. New door hardware schedule provided.

6677 FRANK AVE. NW • NORTH CANTON, OH 44720 • PH:330.493.3722

DRAWINGS:

1. 9.5 FINISH SCHEDULES AND DETAILS
    a. Added WD-8 Hickory Wood Veneer and WD-9 Solid Hickory.
    b. Revised WD-4 to show 2" thickness for stair tread.

2. 9.8 INTERIOR DETAILS
    a. Revised Details 2, 3, and 4 to show PCT-1 as top stair tread, aluminum stair nosing, and PT-12 on stair risers.

3. 12.1 BASEMENT FURNITURE PLAN –
    a. Revised Coded Note 13 to show the fabrication tables as millwork instead of furniture.
    b. Revised Coded Note 22 to have wood pegs instead of metal hooks
    c. Revised Coded Note 9 to show double tier metal lockers
    d. Added Coded Note 36 for single tier metal lockers

4. 12.8 CASEWORK AND MILLWORK DETAILS
    a. Added details 3, 6, 7, and 8 depicting fabrication tables in Maker Space 016
5. 14.3 STAIR SECTIONS
    a. Extent of new concrete sidewalk shown
6. FP SERIES (typical for all sheets)
    a. Added additional notes about system testing and areas not in project scope.
7. P SERIES (typical for all sheets)
    a. Updated note about existing systems. System testing to be performed by contractor and included in project bid.
8. M SERIES (typical for all sheets)
    a. Updated note about existing systems. System testing to be performed by contractor and included in project bid. Existing equipment to remain unless otherwise noted.
    b. Added note that all existing ductwork systems to be cleaned.
9. P2.2
    a. Added replacement of existing storm drain in Work Café for appearance purposes. Clarified the demo and new work scope associated with the existing mop basin rough-in and new sink.
10. M2.1
    a. Additional note on work associated with EX-AHU-2. Added additional notion to reference installation details.
11. M2.3
    a. Clarified work associated with new equipment and installation locations below new drywall ceiling. Added additional notion to reference installation details.
12. M2.4
    a. Added additional notion to reference installation details.
13. M3.1
    a. Additional note on work associated with EX-AHU-2.
14. M3.2
    a. Revised thermostat location.
15. M5.1
    a. Updated diagrams with TB1.5 that was not included.
16. M5.2
    a. Updated diagrams with TB1.5 that was not included.
17. E1.3
    a. Sheet revised to include fire alarm scope.
18. E2.1
    a. Elevator scope revised.

19. E2.2
    a. Smoke detector added in the elevator lobby.
20. E2.3
    a. Smoke detector added in the elevator lobby.
21. E2.4
    a. Smoke detector added in the elevator lobby.
22. E4.1
    a. One Line Power Distribution Diagram revised.

- - - END OF ADDENDUM NO. 1 - - -

ATTACHMENTS:

Pre-bid Meeting Agenda and Sign in Sheet
Original MEP Drawings

SPECIFICATIONS:

05 58 00 Formed Metal Fabrications – Specification has been removed from project.
06 43 00 Wood Stairs and Railings – Revised to add aluminum nosing in 2.4.E.
09 30 13 Ceramic Tile – Revised to show basis of design and alternate manufacturers in 2.3 B.1.a.
09 65 19 Resilient Tile Flooring – Revised to show basis of design and alternate manufacturers in 2.2.A.
09 68 13 Tile Carpeting – Revised to show basis of design and alternate manufacturers in 2.1.A.
10 51 13 FL Metal Lockers – New section added to replace wood lockers.
10 51 16 Wood Lockers – Removed from the project manual in lieu of metal lockers.
12 36 19 Wood Countertops – Added Hickory Solid Wood and Laminate in 2.1.D.
28 31 00 Fire Detection & Alarm
Door Hardware Schedule

DRAWINGS

9.5 FINISH SCHEDULES AND DETAILS
9.8 INTERIOR DETAILS
12.1 BASEMENT FURNITURE PLAN –
12.8 CASEWORK AND MILLWORK DETAILS
14.3 STAIR SECTIONS
FP SERIES
P SERIES
M SERIES
E1.3
E2.1
E2.2
E2.3
E2.4
E4.1

6677 FRANK AVE. NW • NORTH CANTON, OH 44720 • PH:330.493.3722

Pre-Bid Meeting Agenda

11/29/2023 Coshocton Port Authority – Coshocton Collaborative 19.137

1. Introductions

   A. Owner
      1. Coshocton Port Authority, 534 Main St. Coshocton, OH 43812
      2. Contacts:
         a. Tiffany Swigert – Executive Director
         b. Hannah Gallagher – Economic Development Specialist
         c. Ashley Guthrie – Office Manager

   B. Architect – SoL Harris/Day Architects
      1. Justin Gantz – Project Architect
      2. Detail – Interior Design
      3. Wright Engineering – Mechanical Engineer
      4. Stadelman Associates Inc. – Electrical Engineer
      5. Thorson Baker + Associates – Structural Engineer

   C. Fill out "Contacts" sheet
      1. Supply current and active e-mail address
      2. I will distribute the contact list this week
      3. As more contacts are relevant, I will add them to the list and re-distribute

2. Project Overview:

   A. The work consists of approximately 25, 000sf of renovations to the existing facility located at 538 Main St. Coshocton, OH 43812. The building is a multi-use facility hosting a co-working space, a connected café, maker space labs, and offices for the Port Authority, The Coshocton Chamber of Commerce, 3 for 3 Initiative (community lead development organization), and the Small Business Development Center. The goal of this project is to provide the tools, resources, equipment, mentorship, and networking opportunities to create a culture of entrepreneurship and business development.
      1. Single prime contract

   B. SCHEDULE OF ALTERNATES
      1. **Alternate #1:** Description: Provide new RTU to replace the existing carrier rooftop unit (EX-RTU-1) serving the front office supply and return air systems. Provide new roof curb or curb adapter for unit installation and rework existing supply and return air duct as necessary to tie-in to the existing systems within the building.
      2. **Alternate #2:** Description: Provide new like -for-like non-condensing boiler to replace the existing Bryan Boiler (EX-B-1). Install unit on existing equipment pad and reconnect to existing heating water piping, natural gas mains, and flue ductwork.
      3. **Alternate #3:** Description: Provide new gas fired domestic water heater to replace the existing A.O. Smith Water Heater (EX-DWH-1). Reconnect to existing natural gas, exhaust flue, and domestic water piping.
      4. **Alternate #4:** Description: Deduct from scope Roof Sections A and B: Roof layover, 1 layer ½" densdeck mechanically attached, ½" densdeck adhered, HPR torch base, stressply iv plus mineral cap.

5. Estimated cost of construction $4,950,000.00.

C. Sealed bids for the Coshocton Port Authority – Coshocton Collaborative will be received at 534 Main St, Coshocton, OH 43812 in the Lobby until4:00pm local time, on December 11th 2023. Bids will be publicly opened and read at 534 Main St, Coshocton, OH 43812 at 8:00am local time, on December 12th 2023.

D. This project is tax-exempt.

3. Building Permits

A. City of Coshocton Zoning – Submitted

B. Mid East Ohio Building Department – Approved

C. Permits paid for and obtained by contractor.

4. Site Access / Usage

A. Additional site visits during bid will be permitted within Port Authority's hours of operation and coordinated with Owner.

B. Staging is to take place within project site and not block or damage adjacent parking lots.

C. Work restrictions. Material Delivery/Refuse Removal
1. Time Restrictions: Coordinate with Architect.
2. Access Restrictions: Coordinate with Architect.

5. Clarifications/Questions/Substitutions

A. All significant questions/clarifications/substitution requests shall be submitted to the architect's office in written form no later than December 6th by 5:00pm.

B. Email – jgantz@solharrisday.com

C. Any addenda will be issued via AA Blueprint Plan Room.

6. Schedule:

A. Contractor may, but is not required to, include alternative proposed construction schedule and or phasing plan in their bid.

B. Milestone Dates:
1. Construction Commencement: 01-03-2024
2. Substantial Completion: 08-01-2024

Name	Phone number	Company	Email
Tim Matheney		Precision Roofing	tim@ohioprecisionroofing.com
Justin Thompson	740-819-8386	Precision Roofing	justin@ohioprecisionroofing.com
David Wagner	740-622-9464	P.A. Wagner Inc.	david@philipawagnerinc.com
David Harrison	740-404-6232	Hilscher-Clarke	dharrison@hilscher-clarke.com
Derek Alverson	740-622-9464	P.A. Wagner Inc.	derek@philipwagnerinc.com
Doug Hardesty	740-381-3979	Hilscher-Clarke	doug.hardesty@hilscher-clarke.com
Dustin Klein	740-622-0863	Hathaway Inc.	dustinklein@gmail.com
	330-339-7002		
Eric Wood	330-447-3461	Wood Electric	eric@woodelectric.net
Tim Banks	419-631-6160	Alumni Roofing	tim@alumniroofing.com
Ty Martin	330-412-9570	Tycor Roofing	tymartin@tycorroofing.com
Ryan Imhoff	330-317-5462	Imhoff Construction Services	rimhoff@imhoffinc.com
Rich Savage	330-640-1462	Metal Masters Inc.	rds@metal-masters.net
Jodi Grindley	740-929-1000	Roberston Construction	abrown@robertsoncontruction.net
Billie Watson	740-294-1242	Johnson's Plumbing	bwatson@jphtg.com
Heath Johnson	740-622-4438	Johnson's Plumbing	hjohnson@jphtg.com
Nick Bosh	330-478-0081	Intertek PSI	nicholas.bosh@intertek.com
Eric Binsley	330-691-6440		ebinsley@usmcs.com
Carter Paul	7400-819-1935	Paul Contstruction	carter@paulconstruction.net
Jim Barbati	330-364-4224		jobarbati@flickingerpipe.com
Nate Gapinski	614-549-0059		ngapinski@elford.com
Matt McGonigal	440-552-5126		mmcgonaigal@garlandco.com
Jerry Sansom	419-571-5410	Worner Roofing Company Inc.	jerry@wornerroofing.com
Jeff Rupert	330-837-1999		jeff_rupert@airoofing.com
Jim Parker	614-989-3077		jparker@chemcote.com
Huston Hinkle	330-323-8627	Ray Roofing Supply	hhinkle@rayroofingsupply.com

GENERAL NOTES:

1. THE ENTIRE BUILDING IS TO BE FULLY SPRINKLED. THE SPRINKLER CONTRACTOR SHALL BE RESPONSIBLE FOR THE EXACT NUMBER OF HEADS AND EXACT PIPE SIZE BASED ON HIS HYDRAULIC CALCULATIONS TO MEET ALL NFPA 13 REQUIRMENTS. SEE SPECIFICATIONS.
2. HAZARD CLASSIFICATIONS: LIGHT HAZARD (.10 GPM PER SQ. FT.) OVER A MINIMUM OF 1500 SQ. FT. AREA AND A MAXIMUM SPRINKLER HEAD SPACING OF 225 SQ. FT./HEAD UNLESS OTHERWISE NOTED.
3. REFER TO THE ARCHITECTURAL FLOOR PLANS FOR THE FOLLOWING:
   A. LOCATIONS AND TYPES OF CEILINGS.
   B. LOCATION OF NEW WALLS AND NEW ADDITION.
4. REFER TO DRAWING F3.1 FOR TYPICAL SPRINKLER HEAD LOCATIONS FOR VARIOUS CEILING TILE CONFIGURATIONS. COORDINATE WITH ARCHITECTURAL FINISH SCHEDULES REFER TO THE REFLECTED CEILING PLANS FOR LOCATIONS OF LIGHTS, DIFFUSERS, SKYLIGHTS, OPEN CEILINGS ETC.
5. VERIFY ALL CONDITIONS IN FIELD.
6. ALL EXPOSED FIRE PROTECTION PIPING SHALL BE PREPARED BY THE FIRE PROTECTION CONTRATOR TO RECEIVE PAINT.
7. THE FIRE PROTECTION CONTRACTOR SHALL BE RESPONSIBLE FOR PROVIDING A NEW FLOW TEST AT THE HYDRANT CLOSEST TO THIS BUILDING (ON THE MAIN SERVING THIS BUILDING) TO BE USED IN HIS DESIGN.

   EXISTING WATER FLOW TEST INFORMATION:

   WATERFLOW TEST TAKEN BY COSHOCTON FIRE DEPARTMENT BY JEFF CORDER
   1 (740) 622-2555.

   FIRE HYDRANT AT SOUTHWEST CORNER OF THE SITE ON MAIN ST. HYDRANT NO A065; STATIC 105 PSI. RESIDUAL 30 PSI FLOWING 3-1/2", 3050 GPM @ 20 PSI RESIDUAL PRESSURE.
8. COORDINATE LOCATIONS OF SPRINKLERS WITH REFLECTED CEILING PLAN, LIGHTS AND DIFFUSERS.
9. THE SPRINKLER HEAD LOCATIONS SHOWN ON THE DRAWINGS ARE A GENERAL ARRANGEMENT AND THE CONTRACTOR IS REQUIRED TO PROVIDE AN APPROVED SPRINKLER SYSTEM. NOTE: NOT ALL SPRINKLERS ARE SHOWN.

⬡ CODED NOTES:

1. PROVIDE SPRINKLER HEADS AND PIPING IN THIS AREA AS PER NFPA 13, ORDINARY HAZARD, GROUP 1 (.16 GPM PER SQ. FT.) OVER A MINIMUM OF 1500 SQ. FT. AREA AND A MAXIMUM HEAD SPACING OF 130 SQ. FT./HEAD. REFER TO GENERAL NOTES.
2. SPRINKLER SUPPLY FOR BASEMENT FLOOR.
3. PROVIDE PIPING AND SPRINKLER HEAD(S) AT BASE OF ELEVATOR SHAFT AS PER CODE.
4. 2-1/2" FIRE LINE DOWN TO HOSE VALVE. COORDINATE LOCATION WITH ARCHITECT.
5. STANDPIPE UP TO FLOOR ABOVE.
6. INSTALL SPRINKLERS BENEATH LIFT.
7. PROVIDE FLOW SWITCH FOR ELEVATOR SHUT DOWN IN CASE OF ACTIVATION.
8. COORDINATE LOCATION OF SPRINKLER LINE WITH DUCTWORK.
9. COORDINATE LOCATION OF SPRINKLER LINE WITH DUCTWORK AND ELECTRIC CONDUIT.

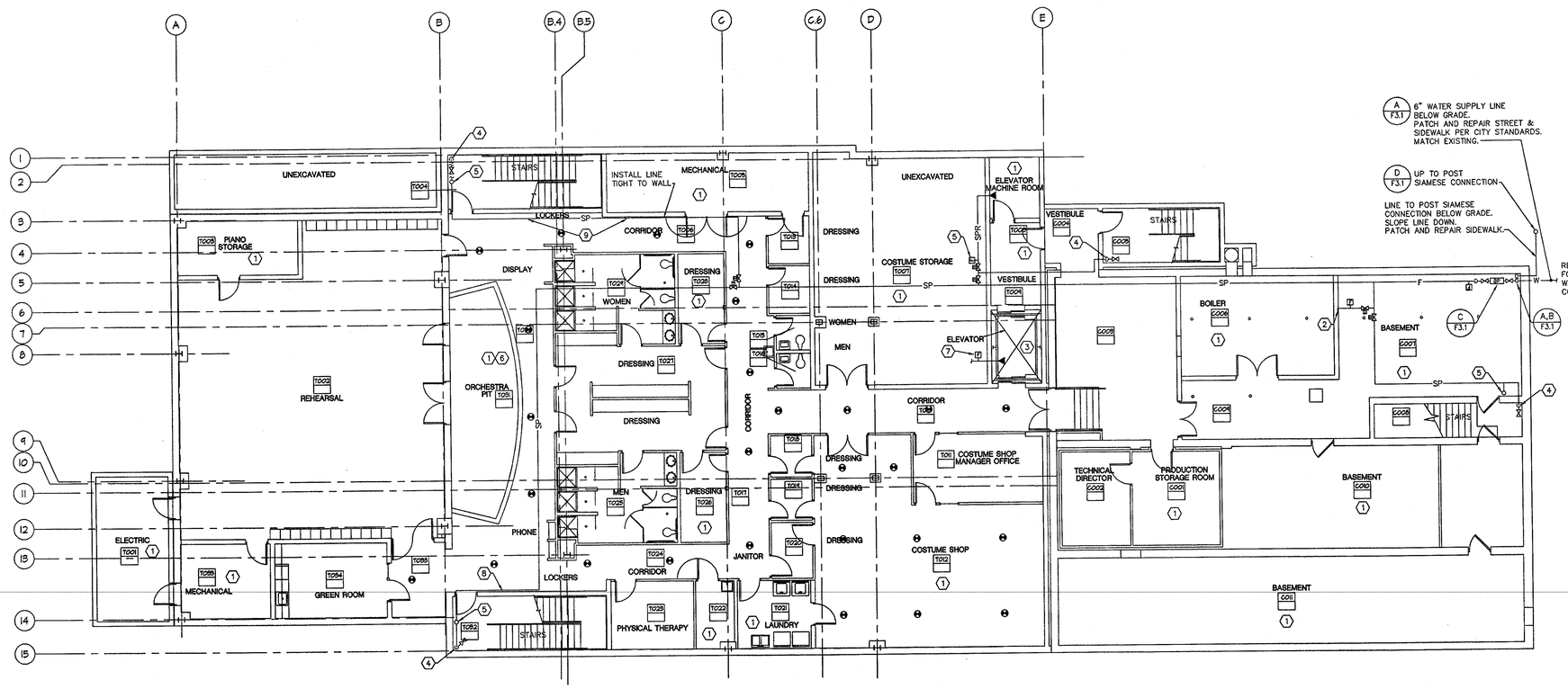

A BASEMENT FLOOR PLAN

1/8"=1'-0"

KORDA/NEMETH ENGINEERING, INC.
1650 WATERMARK DRIVE
COLUMBUS, OHIO 43215

DESIGNED BY Tom Jones
DRAWN BY Michael S. Armstrong
CHECKED BY
KNE JOB # 2000-0110

BRIAN BRAAKSMA 52245 REGISTERED PROFESSIONAL ENGINEER STATE OF OHIO

PASTIME THEATRE

PERFORMING ARTS CENTER
538 Main Street Coshocton, Ohio

HRJL ARCHITECTS
HARDEN • RICE • JAYNES • LICHTENBERG
20 S. 4th ST. NEWARK OHIO 43055-5099
PHONE (740) 345-1220 FAX (740) 345-0061

DRAWN BY
CHECKED BY
COMMISSION NO. 2000065
DATE JANUARY 17, 2001
REVISIONS

F2.0

OF SHEETS

©COPYRIGHT 2000
HARDEN, RICE, JAYNES & LICHTENBERG
ARCHITECTS, A.I.A.
THESE DRAWINGS HAVE BEEN PREPARED SPECIFICALLY FOR THE TITLED PROJECT, ONLY AND NOT SUITABLE FOR USE ON ANY OTHER PROJECT. THEY ARE NOT TO BE LOANED WITHOUT THE APPROVAL AND PERMISSION OF THE ARCHITECT. REPRODUCTION IS PROHIBITED.

X:\Projects\2000\2000-0110 Past Time Theater\Mechanical\Drawings\0011DF20.dwg DATE: JAN 17, 2001 TIME: 10:25 AM
XCHEN

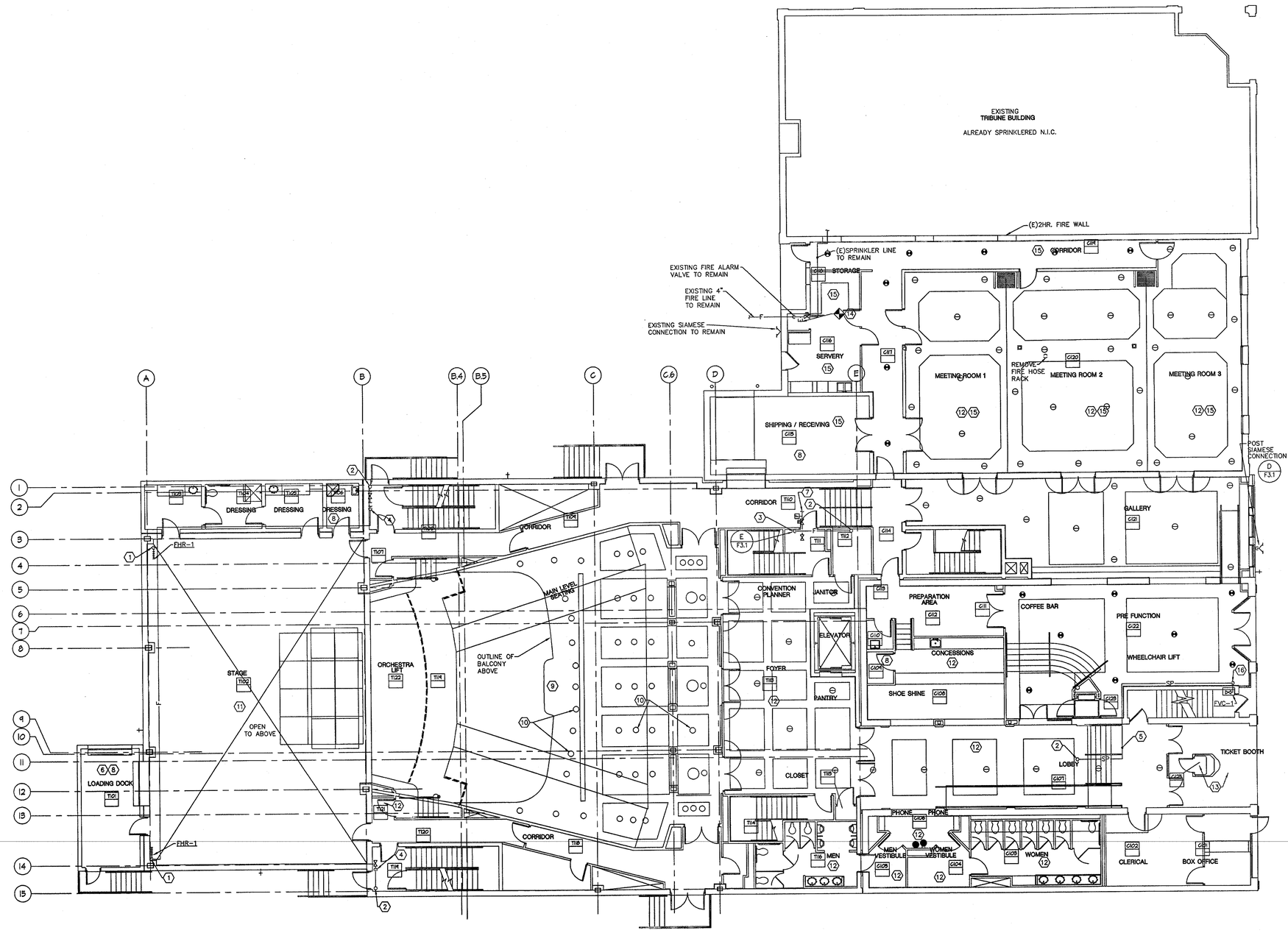

A FIRST FLOOR PLAN

1/8"=1'-0"

GENERAL NOTES:

1. THE ENTIRE BUILDING IS TO BE FULLY SPRINKLED. THE SPRINKLER CONTRACTOR SHALL BE RESPONSIBLE FOR THE EXACT NUMBER OF HEADS AND EXACT PIPE SIZE BASED ON HIS HYDRAULIC CALCULATIONS TO MEET ALL NFPA 13 REQUIRMENTS. SEE SPECIFICATIONS.
2. HAZARD CLASSIFICATIONS: LIGHT HAZARD (.10 GPM PER SQ. FT.) OVER A MINIMUM OF 1500 SQ. FT. AREA AND A MAXIMUM SPRINKLER HEAD SPACING OF 225 SQ. FT./HEAD UNLESS OTHERWISE NOTED.
3. REFER TO THE ARCHITECTURAL FLOOR PLANS FOR THE FOLLOWING:
   A. LOCATIONS AND TYPES OF CEILINGS.
   B. LOCATION OF NEW WALLS AND NEW ADDITION.
4. REFER TO DRAWING F3.1 FOR TYPICAL SPRINKLER HEAD LOCATIONS FOR VARIOUS CEILING TILE CONFIGURATIONS. COORDINATE WITH ARCHITECTURAL FINISH SCHEDULES REFER TO THE REFLECTED CEILING PLANS FOR LOCATIONS OF LIGHTS, DIFFUSERS, SKYLIGHTS, OPEN CEILINGS ETC.
5. VERIFY ALL CONDITIONS IN FIELD.
6. ALL EXPOSED FIRE PROTECTION PIPING SHALL BE PREPARED BY THE FIRE PROTECTION CONTRATOR TO RECEIVE PAINT.
7. THE FIRE PROTECTION CONTRACTOR SHALL BE RESPONSIBLE FOR PROVIDING A NEW FLOW TEST AT THE HYDRANT CLOSEST TO THIS BUILDING (ON THE MAIN SERVING THIS BUILDING) TO BE USED IN HIS DESIGN.

   EXISTING WATER FLOW TEST INFORMATION:

   WATERFLOW TEST TAKEN BY COSHOCTON FIRE DEPARTMENT BY JEFF CORDER
   1 (740) 622-2555.

   FIRE HYDRANT AT SOUTHWEST CORNER OF THE SITE ON MAIN ST. HYDRANT NO A065; STATIC 105 PSI. RESIDUAL 30 PSI FLOWING 3-1/2", 3050 GPM @ 20 PSI RESIDUAL PRESSURE.
8. COORDINATE LOCATIONS OF SPRINKLERS WITH REFLECTED CEILING PLAN, LIGHTS AND DIFFUSERS.
9. THE SPRINKLER HEAD LOCATIONS SHOWN ON THE DRAWINGS ARE A GENERAL ARRANGEMENT AND THE CONTRACTOR IS REQUIRED TO PROVIDE AN APPROVED SPRINKLER SYSTEM. NOTE: NOT ALL SPRINKLERS ARE SHOWN.

CODED NOTES

1. PROVIDE 1-1/2" FIRE HOSE, RACK AND 2 1/2" FIRE DEPARTMENT HOSE VALVE CAP & CHAIN. MOUNT HOSE RACK TOP AT 5'-0" A.F.F. COORDINATE LOCATION WITH STAGE RIGGING. AND ARCHITECT.
2. STANDPIPE LINE UP TO FLOOR ABOVE.
3. 2-1/2" LINE DOWN TO 2-1/2" FIRE DEPARTMENT HOSE VALVE. OFFSET LINE HIGH AS POSSIBLE. COORDINATE LOCATION WITH ARCHITECT.
4. STANDPIPE FROM FLOOR BELOW. PROVIDE 2-1/2" FIRE DEPARTMENT HOSE VALVE. COORDINATE LOCATION WITH ARCHITECT.
5. INSTALL LINE ABOVE CEILING.
6. PROVIDE DRY-TYPE SIDEWALL SPRINKLER HEADS FOR PROTECTION OF DOCK AREA.
7. SPRINKLER SUPPLY FOR THIS FLOOR.
8. PROVIDE SPRINKLER HEADS AND PIPING IN THIS AREA AS PER NFPA 13, ORDINARY HAZARD, GROUP 1 (.16 GPM PER SQ. FT.) OVER A MINIMUM OF 1500 SQ. FT. AREA AND A MAXIMUM HEAD SPACING OF 130 SQ. FT./HEAD.
9. PROVIDE SPRINKLERS TO PROTECT UNDER BALCONY AREA. FINAL LOCATIONS OF SPRINKLER HEADS BENEATH THEATRE BALCONY SHALL BE SUBJECT TO ARCHITECT APPROVAL. SPRINKLER HEADS SHALL BE EVENLY SPACED BENEATH BALCONY. COORDINATE SPRINKLER HEAD LOCATIONS WITH MECHANICAL AND ELECTRICAL CONTRACTORS.
10. PROVIDE CONCEALED – TYPE SPRINKLERS IN CEILING UNDER BALCONY. A SUGGESTED TYPICAL SPRINKLER HEAD LAY-OUT SHOWN. SPRINKLER CONTRACTOR IS RESPONSIBLE FOR FINAL APPROVED SPRINKLER LAYOUT.
11. REFER TO ARCHITECTURAL DETAILS OF STAGE, FLY GALLERY & GRIDIRON FOR DESIGN CRITERIA TO LOCATE PIPING AND SPRINKLERS. SPRINKLER HEADS IN STAGE AREA SHALL BE LOCATED SUCH THAT THE STAGE CURTAIN IS PROTECTED.
12. PROVIDE CONCEALED-TYPE SPRINKLERS WITH WHITE FINISH IN THIS ROOM/AREA.
13. THIS ROOM/AREA NOT REQUIRED TO BE SPRINKLERED.
14. DISCONNECT EXISTING SPRINKLER LINE FROM LINE TO THE TRIBUNE BUILDING, CAPLINE.
15. REMOVE EXISTING SPRINKLERS AND PIPING IN THIS AREA. INSTALL NEW APPROVED SPRINKLER SYSTEM.
16. STANDPIPE FROM FLOOR BELOW. PROVIDE 2-1/2" HOSE VALVE WITHIN FIRE VALVE CABINET. OFFSET LINE HIGH AS POSSIBLE. COORDINATE LOCATION WITH ARCHITECT.

BRIAN BRAAKSMA 52245
REGISTERED PROFESSIONAL ENGINEER
STATE OF OHIO

KORDA/NEMETH ENGINEERING, INC.
1650 WATERMARK DRIVE
COLUMBUS, OHIO 43215
DESIGNED BY Tom Jones
DRAWN BY Michael S. Armstrong
CHECKED BY
KNE JOB # 2000-0110

PAST TIME THEATRE

PERFORMING ARTS CENTER
538 Main Street Coshocton, Ohio

HRJL ARCHITECTS
HAYDEN • REID • JAYNES • LUCHTENBERG
20 S. 4th ST. NEWARK OHIO 43055-5099
PHONE (740) 345-5333 FAX (740) 345-5391

DRAWN BY
CHECKED BY
COMMISION NO. 2000065
DATE JANUARY 17, 2001
REVISIONS

F2.1

OF SHEETS

©COPYRIGHT 2000
HAYDEN, REID, JAYNES & LUCHTENBERG ARCHITECTS, INC.
THESE DOCUMENTS HAVE BEEN PREPARED SPECIFICALLY FOR THE STYLES PROJECT. THEY ARE NOT TO BE USED IN WHOLE OR IN OTHER PROJECTS BY ANY LOCATIONS WITHOUT THE APPROVAL AND PARTICIPATION OF THE ARCHITECTS. REPRODUCTION IS PROHIBITED.

YCHEN H:\Projects\2000\2000-0110 Past Time Theater\Mechanical\Drawings\00110F21.dwg DATE: JAN 17, 2001 TIME: 11:20 AM

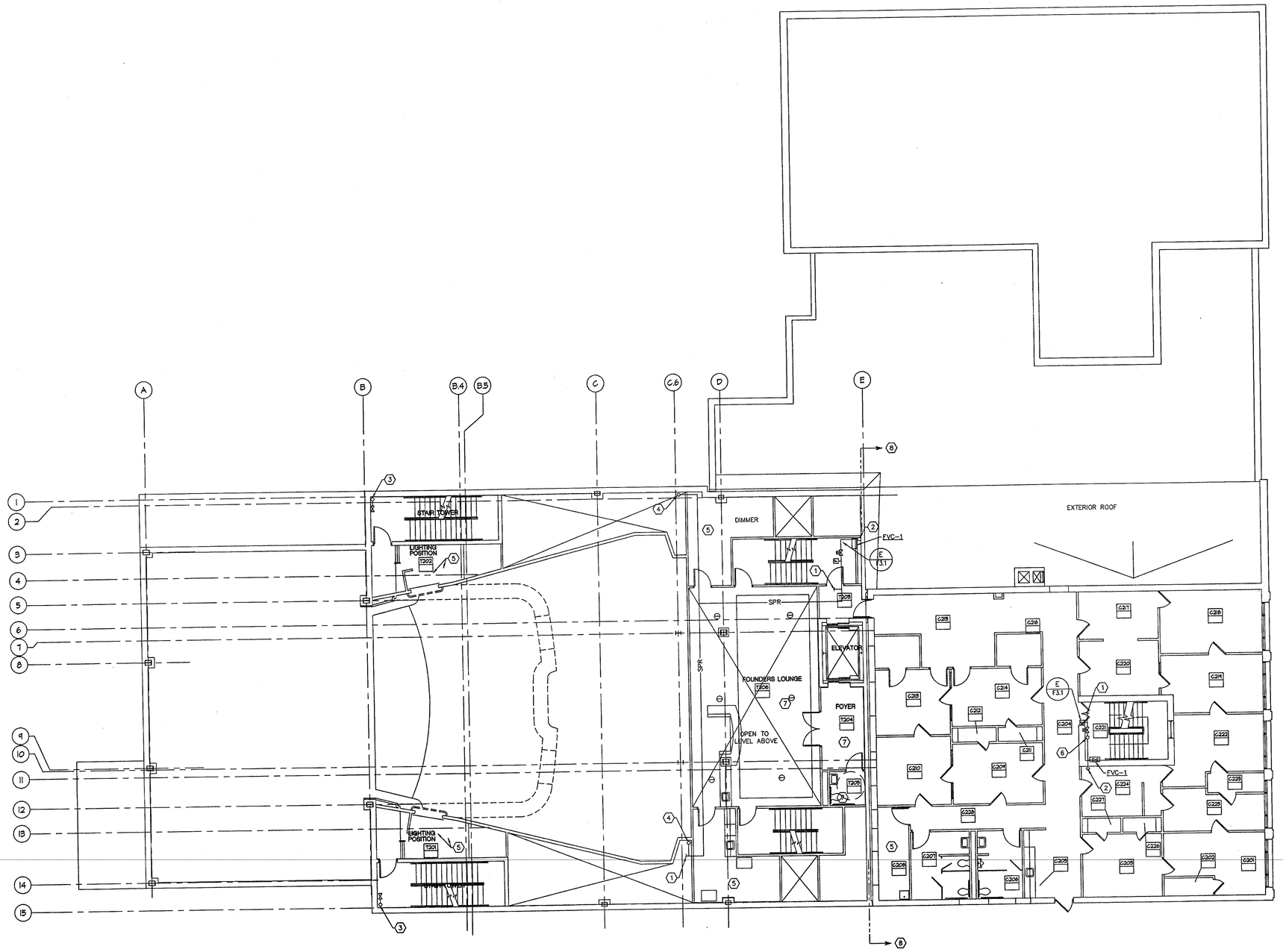

A SECOND FLOOR PLAN

1/8"=1'-0"

N

GENERAL NOTES:

1. THE ENTIRE BUILDING IS TO BE FULLY SPRINKLED. THE SPRINKLER CONTRACTOR SHALL BE RESPONSIBLE FOR THE EXACT NUMBER OF HEADS AND EXACT PIPE SIZE BASED ON HIS HYDRAULIC CALCULATIONS TO MEET ALL NFPA 13 REQUIRMENTS. SEE SPECIFICATIONS.
2. HAZARD CLASSIFICATIONS: LIGHT HAZARD (.10 GPM PER SQ. FT.) OVER A MINIMUM OF 1500 SQ. FT. AREA AND A MAXIMUM SPRINKLER HEAD SPACING OF 225 SQ. FT./HEAD UNLESS OTHERWISE NOTED.
3. REFER TO THE ARCHITECTURAL FLOOR PLANS FOR THE FOLLOWING:
   A. LOCATIONS AND TYPES OF CEILINGS.
   B. LOCATION OF NEW WALLS AND NEW ADDITION.
4. REFER TO DRAWING F3.1 FOR TYPICAL SPRINKLER HEAD LOCATIONS FOR VARIOUS CEILING TILE CONFIGURATIONS. COORDINATE WITH ARCHITECTURAL FINISH SCHEDULES REFER TO THE REFLECTED CEILING PLANS FOR LOCATIONS OF LIGHTS, DIFFUSERS, SKYLIGHTS, OPEN CEILINGS ETC.
5. VERIFY ALL CONDITIONS IN FIELD.
6. ALL EXPOSED FIRE PROTECTION PIPING SHALL BE PREPARED BY THE FIRE PROTECTION CONTRATOR TO RECEIVE PAINT.
7. THE FIRE PROTECTION CONTRACTOR SHALL BE RESPONSIBLE FOR PROVIDING A NEW FLOW TEST AT THE HYDRANT CLOSEST TO THIS BUILDING (ON THE MAIN SERVING THIS BUILDING) TO BE USED IN HIS DESIGN.

   EXISTING WATER FLOW TEST INFORMATION:

   WATERFLOW TEST TAKEN BY COSHOCTON FIRE DEPARTMENT BY JEFF CORDER
   1 (740) 622-2555.

   FIRE HYDRANT AT SOUTHWEST CORNER OF THE SITE ON MAIN ST. HYDRANT NO A065; STATIC 105 PSI. RESIDUAL 30 PSI FLOWING 3-1/2", 3050 GPM @ 20 PSI RESIDUAL PRESSURE.
8. COORDINATE LOCATIONS OF SPRINKLERS WITH REFLECTED CEILING PLAN, LIGHTS AND DIFFUSERS.
9. THE SPRINKLER HEAD LOCATIONS SHOWN ON THE DRAWINGS ARE A GENERAL ARRANGEMENT AND THE CONTRACTOR IS REQUIRED TO PROVIDE AN APPROVED SPRINKLER SYSTEM. NOTE: NOT ALL SPRINKLERS ARE SHOWN.

⬡ CODED NOTES

1. SPRINKLER SUPPLY FOR THIS FLOOR.
2. STANDPIPE LINE FROM FLOOR BELOW. PROVIDE 2-1/2" FIRE DEPARTMENT HOSE VALVE IN FIRE VALVE CABINET(FVC-1). OFFSET LINE HIGH AS POSSIBLE. COORDINATE LOCATION WITH ARCHITECT.
3. STANDPIPE LINE FROM BELOW, UP TO FLOOR ABOVE. PROVIDE 2-1/2" FIRE DEPARTMENT HOSE VALVE. COORDINATE LOCATION WITH ARCHITECT.
4. SPRINKLER SUPPLY UP TO FLOOR ABOVE.
5. PROVIDE SPRINKLER HEADS AND PIPING IN THIS AREA AS PER NFPA 13, ORDINARY HAZARD, GROUP 1 (.16 GPM PER SQ. FT.) OVER A MAXIMUM HEAD SPACING OF 130 SQ. FT./HEAD.
6. STANDPIPE LINE UP TO FLOOR ABOVE.
7. PROVIDE CONCEALED-TYPE SPRINKLERS WITH WHITE FINISH IN THIS ROOM/AREA.
8. SPRINKLER LAYOUT TO BE DESIGNED AT A LATER DATE AND COORDINATED WITH ARCHITECT.

BRIAN BRAAKSMA 52245 REGISTERED PROFESSIONAL ENGINEER STATE OF OHIO

KORDA/NEMETH ENGINEERING, INC.
1650 WATERMARK DRIVE
COLUMBUS, OHIO 43215
DESIGNED BY Tom Jones
DRAWN BY Michael S. Armstrong
CHECKED BY
KNE JOB # 2000-0110

PASTIME THEATRE

PERFORMING ARTS CENTER
538 Main Street Coshocton, Ohio

HRJL ARCHITECTS
HARDEN • FEIG • JAMES • LICHTENBERG
20 S. 4th ST. NEWARK OHIO 43055-5099
PHONE (740) 345-9228 FAX (740) 345-3091

DRAWN BY
CHECKED BY
COMMISION NO. 2000065
DATE JANUARY 17, 2001
REVISIONS

F2.2

OF SHEETS

©COPYRIGHT 2000
HARDEN, FEIG, JAMES & LICHTENBERG ARCHITECTS, INC.
THESE DOCUMENTS HAVE BEEN PREPARED EXCLUSIVELY FOR THE TITLED PROJECT. THEY ARE NOT TO BE USED IN WHOLE OR IN PART FOR OTHER PROJECTS OR WITH LOCATIONS WITHOUT THE APPROVAL AND PARTICIPATION OF THE ARCHITECTS. REPRODUCTION IS PROHIBITED.

YCHEN H:\Projects\2000\2000-0110 Past Time Theater\Mechanical\Drawings\00110F22.dwg DATE: JAN 17, 2001 TIME: 11:31 AM

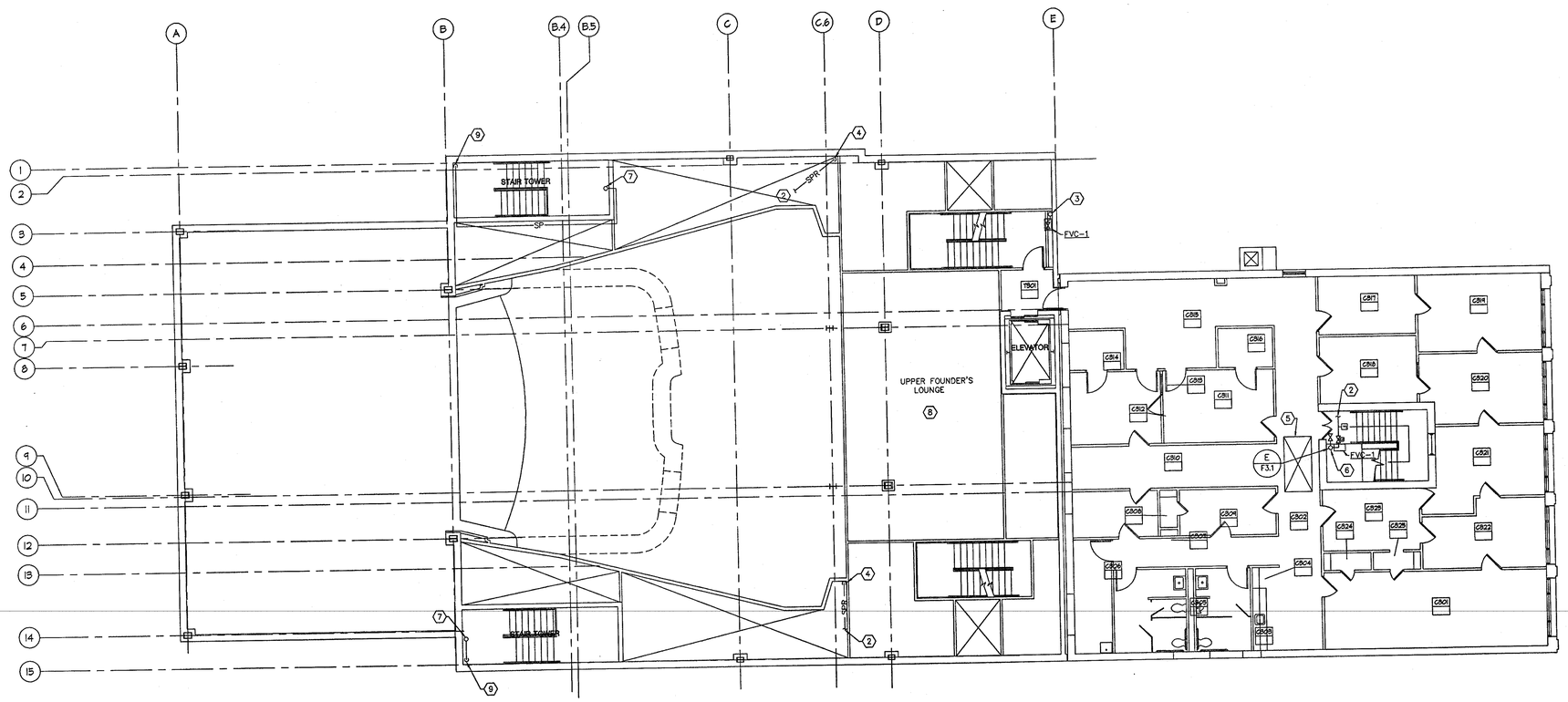

A THIRD FLOOR PLAN

1/8"=1'-0"

GENERAL NOTES:

1. THE ENTIRE BUILDING IS TO BE FULLY SPRINKLED. THE SPRINKLER CONTRACTOR SHALL BE RESPONSIBLE FOR THE EXACT NUMBER OF HEADS AND EXACT PIPE SIZE BASED ON HIS HYDRAULIC CALCULATIONS TO MEET ALL NFPA 13 REQUIRMENTS. SEE SPECIFICATIONS.
2. HAZARD CLASSIFICATIONS: LIGHT HAZARD (.10 GPM PER SQ. FT.) OVER A MINIMUM OF 1500 SQ. FT. AREA AND A MAXIMUM SPRINKLER HEAD SPACING OF 225 SQ. FT./HEAD UNLESS OTHERWISE NOTED.
3. REFER TO THE ARCHITECTURAL FLOOR PLANS FOR THE FOLLOWING:
   A. LOCATIONS AND TYPES OF CEILINGS.
   B. LOCATION OF NEW WALLS AND NEW ADDITION.
4. REFER TO DRAWING F3.1 FOR TYPICAL SPRINKLER HEAD LOCATIONS FOR VARIOUS CEILING TILE CONFIGURATIONS. COORDINATE WITH ARCHITECTURAL FINISH SCHEDULES REFER TO THE REFLECTED CEILING PLANS FOR LOCATIONS OF LIGHTS, DIFFUSERS, SKYLIGHTS, OPEN CEILINGS ETC.
5. VERIFY ALL CONDITIONS IN FIELD.
6. ALL EXPOSED FIRE PROTECTION PIPING SHALL BE PREPARED BY THE FIRE PROTECTION CONTRATOR TO RECEIVE PAINT.
7. THE FIRE PROTECTION CONTRACTOR SHALL BE RESPONSIBLE FOR PROVIDING A NEW FLOW TEST AT THE HYDRANT CLOSEST TO THIS BUILDING (ON THE MAIN SERVING THIS BUILDING) TO BE USED IN HIS DESIGN.

   EXISTING WATER FLOW TEST INFORMATION:

   WATERFLOW TEST TAKEN BY COSHOCTON FIRE DEPARTMENT BY JEFF CORDER
   1 (740) 622-2555.

   FIRE HYDRANT AT SOUTHWEST CORNER OF THE SITE ON MAIN ST.
   HYDRANT NO A065; STATIC 105 PSI, RESIDUAL 30 PSI FLOWING 3-1/2", 3050 GPM @ 20 PSI RESIDUAL PRESSURE.
8. COORDINATE LOCATIONS OF SPRINKLERS WITH REFLECTED CEILING PLAN, LIGHTS AND DIFFUSERS.
9. THE SPRINKLER HEAD LOCATIONS SHOWN ON THE DRAWINGS ARE A GENERAL ARRANGEMENT AND THE CONTRACTOR IS REQUIRED TO PROVIDE AN APPROVED SPRINKLER SYSTEM. NOTE: NOT ALL SPRINKLERS ARE SHOWN.

NOTE:

1. SPRINKLER WOOD TRUSSES ABOVE CEILING OF EXISTING BUILDING.

CODED NOTES

1. STANDPIPE LINE UP/DOWN.
2. SPRINKLER SUPPLY FOR THIS FLOOR.
3. STANDPIPE LINE UP/DOWN. PROVIDE 2-1/2" FIRE DEPARTMENT HOSE VALVE IN FIRE VALVE CABINET(FVC-1). COORDINATE LOCATION WITH ARCHITECT.
4. SPRINKLER SUPPLY FROM FLOOR BELOW.
5. OUTLINE OF EXISTING SKYLIGHT.
6. STANDPIPE LINE FROM FLOOR ABOVE OF COORDINATE LOCATION. STANDPIPE AND 2-1/2" FIRE DEPARTMENT HOSE VALVE IN FIRE VALVE CABINET(FVC-1) WITH ARCHITECT.
7. STANDPIPE LINE UP TO FLOOR ABOVE.
8. PROVIDE CONEALED-TYPE SPRINKLERS WITH WHITE FINISH IN THIS ROOM/AREA.
9. STANDPIPE LINE FROM FLOOR BELOW. OFFSET LINE HIGH AS POSSIBLE.

STATE OF OHIO PROFESSIONAL ENGINEER REGISTERED BRIAN BRAAKSMA 52245

KORDA/NEMETH ENGINEERING, INC.
1650 WATERMARK DRIVE
COLUMBUS, OHIO 43215
DESIGNED BY Tom Jones
DRAWN BY Michael S. Armstrong
CHECKED BY
KNE JOB # 2000-0110

PASTIME THEATRE

PERFORMING ARTS CENTER
538 Main Street Coshocton, Ohio

HRJL ARCHITECTS
HARDEN • REID • JAMES • LUCHTENBERG
50 S. 4th ST. NEWARK OHIO 43055-5599
PHONE (740) 349-5599 FAX (740) 345-5595

DRAWN BY
CHECKED BY
COMMISSION NO. 2000065
DATE JANUARY 17, 2001
REVISIONS

F2.3

OF SHEETS

© COPYRIGHT 2000
HARDEN, REID, JAMES & LUCHTENBERG ARCHITECTS, INC.
THESE DRAWINGS ARE HERE PREPARED SPECIFICALLY FOR THIS PROJECT AND ARE THE PROPERTY OF THE ARCHITECT. USE ON OTHER PROJECTS OR IN OTHER LOCATIONS WITHOUT THE ARCHITECTS AND PARTICIPATION IS PROHIBITED. REPRODUCTION IS PROHIBITED.

YCHEN H:\Projects\2000\2000-010 Past Time Theater\Mechanical\Drawings\00110F23.dwg DATE: JAN 17, 2001 TIME: 11:49 AM

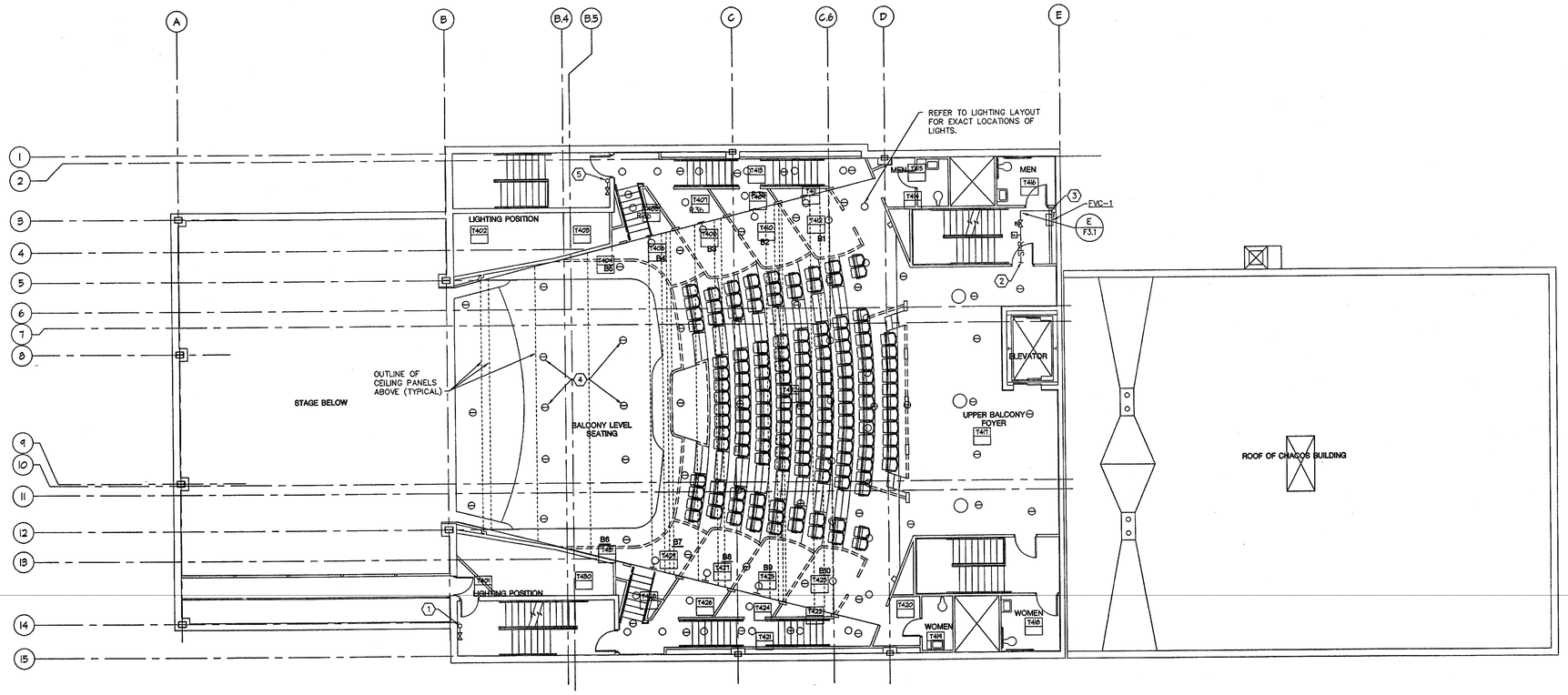

A FOURTH FLOOR PLAN

1/8"=1'-0"

GENERAL NOTES:

1. THE ENTIRE BUILDING IS TO BE FULLY SPRINKLED. THE SPRINKLER CONTRACTOR SHALL BE RESPONSIBLE FOR THE EXACT NUMBER OF HEADS AND EXACT PIPE SIZE BASED ON HIS HYDRAULIC CALCULATIONS TO MEET ALL NFPA 13 REQUIRMENTS. SEE SPECIFICATIONS.
2. HAZARD CLASSIFICATIONS: LIGHT HAZARD (.10 GPM PER SQ. FT.) OVER A MINIMUM OF 1500 SQ. FT. AREA AND A MAXIMUM SPRINKLER HEAD SPACING OF 225 SQ. FT./HEAD UNLESS OTHERWISE NOTED.
3. REFER TO THE ARCHITECTURAL FLOOR PLANS FOR THE FOLLOWING:
   A. LOCATIONS AND TYPES OF CEILINGS.
   B. LOCATION OF NEW WALLS AND NEW ADDITION.
4. REFER TO DRAWING F3.1 FOR TYPICAL SPRINKLER HEAD LOCATIONS FOR VARIOUS CEILING TILE CONFIGURATIONS. COORDINATE WITH ARCHITECTURAL FINISH SCHEDULES REFER TO THE REFLECTED CEILING PLANS FOR LOCATIONS OF LIGHTS, DIFFUSERS, SKYLIGHTS, OPEN CEILINGS ETC.
5. VERIFY ALL CONDITIONS IN FIELD.
6. ALL EXPOSED FIRE PROTECTION PIPING SHALL BE PREPARED BY THE FIRE PROTECTION CONTRATOR TO RECEIVE PAINT.
7. THE FIRE PROTECTION CONTRACTOR SHALL BE RESPONSIBLE FOR PROVIDING A NEW FLOW TEST AT THE HYDRANT CLOSEST TO THIS BUILDING (ON THE MAIN SERVING THIS BUILDING) TO BE USED IN HIS DESIGN.

   EXISTING WATER FLOW TEST INFORMATION:

   WATERFLOW TEST TAKEN BY COSHOCTON FIRE DEPARTMENT BY JEFF CORDER
   1 (740) 622-2555.

   FIRE HYDRANT AT SOUTHWEST CORNER OF THE SITE ON MAIN ST. HYDRANT NO A065; STATIC 105 PSI. RESIDUAL 30 PSI FLOWING 3-1/2", 3050 GPM @ 20 PSI RESIDUAL PRESSURE.
8. COORDINATE LOCATIONS OF SPRINKLERS WITH REFLECTED CEILING PLAN, LIGHTS AND DIFFUSERS.
9. THE SPRINKLER HEAD LOCATIONS SHOWN ON THE DRAWINGS ARE A GENERAL ARRANGEMENT AND THE CONTRACTOR IS REQUIRED TO PROVIDE AN APPROVED SPRINKLER SYSTEM. NOTE: NOT ALL SPRINKLERS ARE SHOWN.

CODED NOTES

1. STANDPIPE LINE FROM BELOW. PROVIDE 2-1/2" FIRE DEPARTMENT HOSE VALVE. COORDINATE LOCATION WITH ARCHITECT.
2. SPRINKLER SUPPLY FOR THIS FLOOR.
3. STANDPIPE LINE UP/DOWN. PROVIDE 2-1/2" FIRE DEPARTMENT HOSE VALVE IN FIRE VALVE CABINET(FVC-1). OFFSET LINE HIGH AS POSSIBLE. COORDINATE LOCATION WITH ARCHITECT.
4. PROVIDE CONCEALED-TYPE SPRINKLER'S IN AUDITORIUM CEILING. A SUGGESTED TYPICAL SPRINKLER HEAD HEAD LAYOUT SHOWN. SPRINKLER CONTRACTOR IS RESPONSIBLE FOR FINAL APPROVED SPRINKLER LAYOUT.
5. STANDPIPE LINE UP/DOWN. PROVIDE 2-1/2" FIRE DEPARTMENT HOSE VALVE. COORDINATE LOCATION WITH ARCHITECT.

PAST TIME THEATRE
PERFORMING ARTS CENTER
538 Main Street Coshocton, Ohio

HRJL ARCHITECTS
HARDEN • REID • JAMES • LUCHTENBERG
20 S. 4th ST. NEWARK, OHIO 43055-5599
PHONE (740) 348-9233 FAX (740) 345-2201

DRAWN BY
CHECKED BY
COMMISION NO. 2000065
DATE JANUARY 17, 2001
REVISIONS

F2.4

OF SHEETS

©COPYRIGHT 2000
HARDEN, REID, JAMES & LUCHTENBERG ARCHITECTS, INC.
THESE DRAWINGS AND THEIR DESIGN PROVIDED HEREIN ARE THE PROPERTY OF THE ARCHITECT. THEY ARE NOT SUITABLE FOR USE ON OTHER PROJECTS OR IN OTHER LOCATIONS WITHOUT THE EXPRESSED WRITTEN PERMISSION OF THE ARCHITECT. REPRODUCTION IS PROHIBITED.

STATE OF OHIO
BRIAN BRAAKSMA
52245
REGISTERED PROFESSIONAL ENGINEER

KORDA/NEMETH ENGINEERING, INC.
1650 WATERMARK DRIVE
COLUMBUS, OHIO 43215
DESIGNED BY Tom Jones
DRAWN BY Michael S. Armstrong
CHECKED BY
KNE JOB # 2000-0110

YCHEN H:\Projects\2000\2000-0110 Past Time Theater\Mechanical\Drawings\00110F24.dwg DATE: JAN 17, 2001 TIME: 1:05 PM

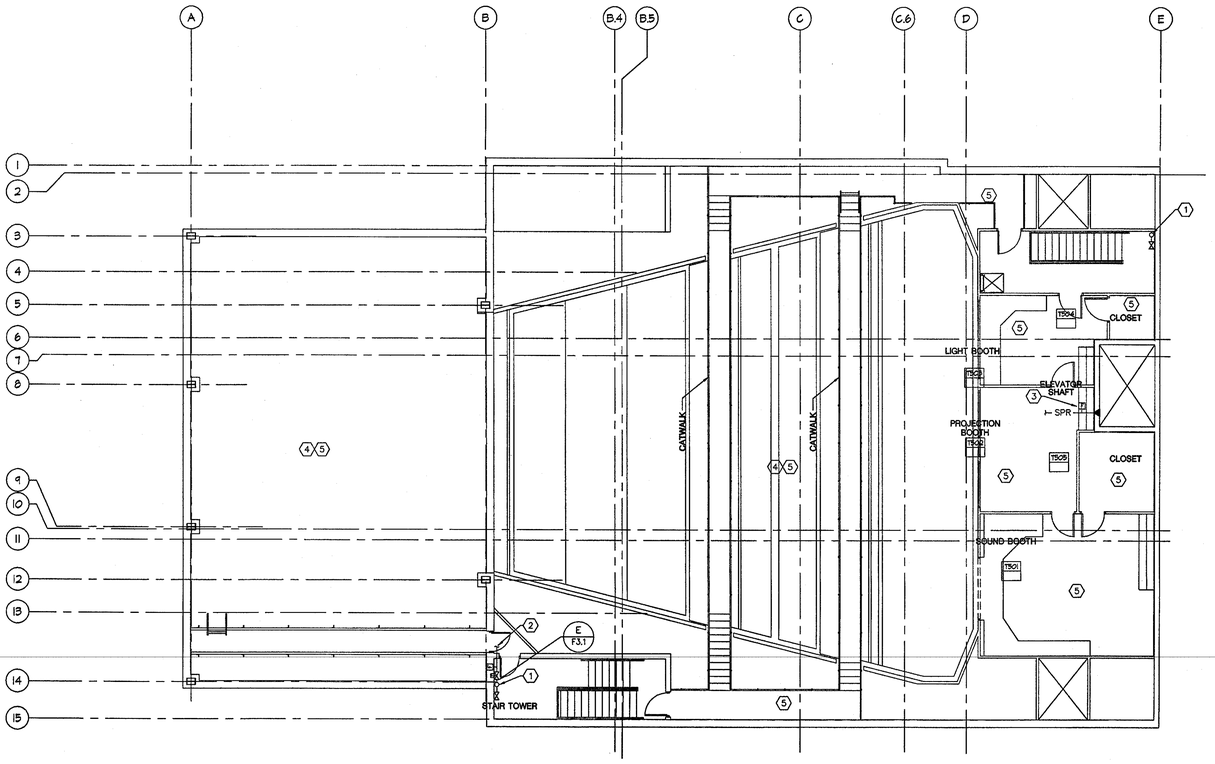

A FIFTH FLOOR PLAN

1/8"=1'-0"

N

GENERAL NOTES:

1. THE ENTIRE BUILDING IS TO BE FULLY SPRINKLED. THE SPRINKLER CONTRACTOR SHALL BE RESPONSIBLE FOR THE EXACT NUMBER OF HEADS AND EXACT PIPE SIZE BASED ON HIS HYDRAULIC CALCULATIONS TO MEET ALL NFPA 13 REQUIRMENTS. SEE SPECIFICATIONS.
2. HAZARD CLASSIFICATIONS: LIGHT HAZARD (.10 GPM PER SQ. FT.) OVER A MINIMUM OF 1500 SQ. FT. AREA AND A MAXIMUM SPRINKLER HEAD SPACING OF 225 SQ. FT./HEAD UNLESS OTHERWISE NOTED.
3. REFER TO THE ARCHITECTURAL FLOOR PLANS FOR THE FOLLOWING:
   A. LOCATIONS AND TYPES OF CEILINGS.
   B. LOCATION OF NEW WALLS AND NEW ADDITION.
4. REFER TO DRAWING F3.1 FOR TYPICAL SPRINKLER HEAD LOCATIONS FOR VARIOUS CEILING TILE CONFIGURATIONS. COORDINATE WITH ARCHITECTURAL FINISH SCHEDULES REFER TO THE REFLECTED CEILING PLANS FOR LOCATIONS OF LIGHTS, DIFFUSERS, SKYLIGHTS, OPEN CEILINGS ETC.
5. VERIFY ALL CONDITIONS IN FIELD.
6. ALL EXPOSED FIRE PROTECTION PIPING SHALL BE PREPARED BY THE FIRE PROTECTION CONTRATOR TO RECEIVE PAINT.
7. THE FIRE PROTECTION CONTRACTOR SHALL BE RESPONSIBLE FOR PROVIDING A NEW FLOW TEST AT THE HYDRANT CLOSEST TO THIS BUILDING (ON THE MAIN SERVING THIS BUILDING) TO BE USED IN HIS DESIGN.

   EXISTING WATER FLOW TEST INFORMATION:

   WATERFLOW TEST TAKEN BY COSHOCTON FIRE DEPARTMENT BY JEFF CORDER
   1 (740) 622-2555.

   FIRE HYDRANT AT SOUTHWEST CORNER OF THE SITE ON MAIN ST.
   HYDRANT NO A065; STATIC 105 PSI. RESIDUAL 30 PSI FLOWING 3-1/2", 3050 GPM @ 20 PSI RESIDUAL PRESSURE.
8. COORDINATE LOCATIONS OF SPRINKLERS WITH REFLECTED CEILING PLAN, LIGHTS AND DIFFUSERS.
9. THE SPRINKLER HEAD LOCATIONS SHOWN ON THE DRAWINGS ARE A GENERAL ARRANGEMENT AND THE CONTRACTOR IS REQUIRED TO PROVIDE AN APPROVED SPRINKLER SYSTEM. NOTE: NOT ALL SPRINKLERS ARE SHOWN.

CODED NOTES:

1. STANDPIPE LINE FROM BELOW. PROVIDE 2-1/2" FIRE DEPARTMENT HOSE VALVE. COORDINATE LOCATION WITH ARCHITECT.
2. SPRINKLER SUPPLY FOR THIS FLOOR.
3. PROVIDE FLOW SWITCH FOR ELEVATOR SHUT DOWN IN CASE OF ACTIVATION.
4. SPRINKLER TWO LAYERS, (1)ABOVE AND (1)BELOW THE CATWALK GRID GRATING.
5. PROVIDE SPRINKLER HEADS AND PIPING IN THIS AREA AS PER NFPA 13, ORDINARY HAZARD, GROUP 1 (.16 GPM PER SQ. FT.) OVER A MINIMUM OF 1500 SQ. FT. AREA AND A MAXIMUM HEAD SPACING OF 130 SQ. FT./HEAD.

STATE OF OHIO
BRIAN BRAAKSMA
52245
REGISTERED PROFESSIONAL ENGINEER

KORDA/NEMETH ENGINEERING, INC.
1650 WATERMARK DRIVE
COLUMBUS, OHIO 43215
DESIGNED BY Tom Jones
DRAWN BY Michael S. Armstrong
CHECKED BY
KNE JOB # 2000-0110

PASTIME THEATRE

PERFORMING ARTS CENTER
538 Main Street Coshocton, Ohio

HRJL ARCHITECTS
HARDEN • REID • JAMES • LUCHTENBERG
20 S. 4th ST. NEWARK OHIO 43055-5099
PHONE (740) 349-8223 FAX (740) 345-5091

DRAWN BY
CHECKED BY
COMMISION NO. 2000065
DATE JANUARY 17, 2001
REVISIONS

F2.5

OF SHEETS

© COPYRIGHT 2000
HARDEN, REID, JAMES & LUCHTENBERG ARCHITECTS, INC.
THESE DOCUMENTS HAVE BEEN PREPARED SPECIFICALLY FOR THE USE OF PROJECT. THEY ARE NOT SUITABLE FOR USE ON OTHER PROJECTS OR IN OTHER LOCATIONS WITHOUT THE APPROVAL AND PARTICIPATION OF THE ARCHITECT. REPRODUCTION IS PROHIBITED.

YCHEN H:\Projects\2000\2000-0110 Past Time Theater\Mechanical\Drawings\00110F25.dwg DATE: JAN 17, 2001 TIME: 1:10 PM

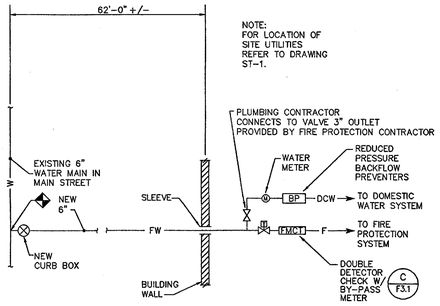

A DETAIL
COMBINATION DOMESTIC/FIRE PROTECTION N.T.S.

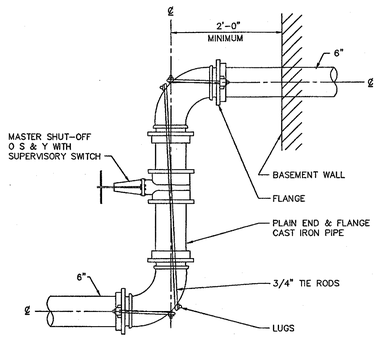

B DETAIL
FIRE PROTECTION WATER SERVICE N.T.S.

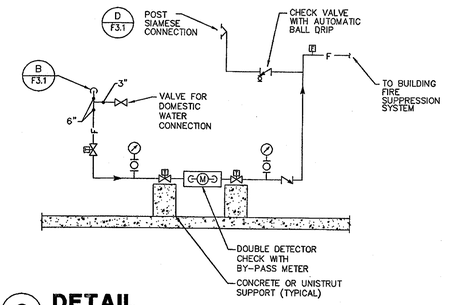

C DETAIL
DETECTOR CHECK PIPING N.T.S.

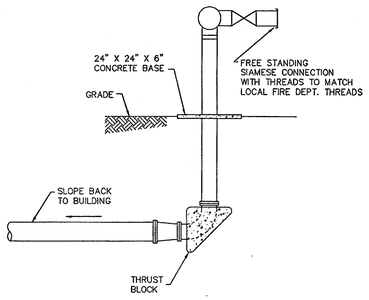

D DETAIL
POST TYPE SIAMESE N.T.S.

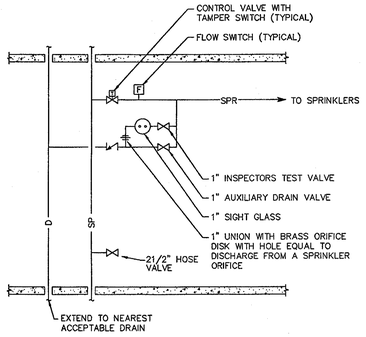

E DETAIL
FLOOR CONTROL VALVE PIPING N.T.S.

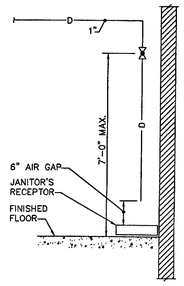

F DETAIL
TYPICAL SPRINKLER DRAIN PIPING N.T.S.

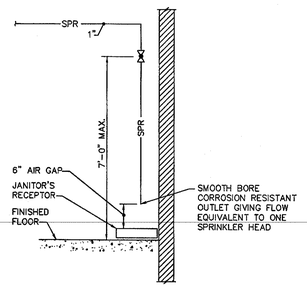

G DETAIL
TYPICAL INSPECTOR'S TEST CONNECTION PIPING N.T.S.

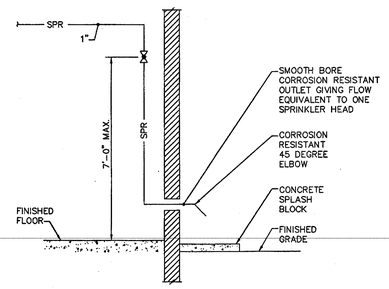

H DETAIL
TYPICAL INSPECTOR'S TEST CONNECTION PIPING N.T.S.

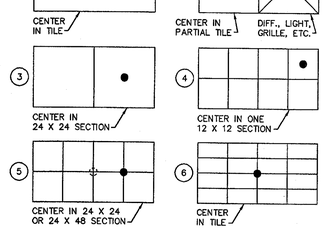

NOTE: NO. ② ABOVE TYPICAL FOR ANY STYLE OF CEILING TILE.

GENERAL NOTES (APPLY TO ALL SHEETS)

1. SEE DETAILS ABOVE FOR TYPICAL SPRINKLER HEAD LOCATION FOR VARIOUS CEILING TILE CONFIGURATIONS. COORDINATE WITH ARCHITECTURAL FINISH SCHEDULES AND DETAILS.
2. THE FIRE PROTECTION CONTRACTOR SHALL REFER TO THE REFLECTED CEILING PLAN FOR COORDINATION OF THE SPRINKLER HEAD LOCATIONS.

J DETAIL
TYPICAL SPRINKLER HEAD LOCATIONS IN VARIOUS CEILING TILE TYPES N.T.S.

FIRE PROTECTION SYMBOLS LIST
NOTE: ALL SYMBOLS NOT NECESSARILY USED

PIPING

FIRE MAIN	F
COMB. FIRE & WATER SERVICE	FW
ANTIFREEZE	AF
STANDPIPE	SP
SPRINKLER PIPE	SPR
DRAIN	D
COMB. SRINKLER & STANDPIPE	S
DRY PIPE	DP
DELUGE	DL
EXISTING TO REMAIN	(E)
EXISTING TO BE REMOVED	(R)
EXISTING TO BE ABANDONED	(AB)

SPECIALTIES

FIRE EXTINGUISHER	FE
FIRE EXTINGUISHER CABINET	FEC
FIRE HOSE CABINET	FHC
FIRE HOSE/EXTINGUISHER CABINET	FHEC
FIRE HOSE RACK	FHR
FIRE VALVE CABINET	FVC
WATER MOTOR GONG	
ELECTRIC ALARM BELL	
GAUGE	
WALL TYPE SIAMESE CONNECTION	
TEST CONNECTION	
ROOF HYDRANT	
UNION	
SIGHT GLASS	
FIRE RATED OR WATER TIGHT PIPE SLEEVE	
DETECTOR CHECK VALVE	DC
DETECTOR CHECK VALVE WITH BYPASS METER	DCM
CONNECT TO EXISTING	

VALVES

ELECTRICALLY SUPERVISED VALVE	
CHECK VALVE	
GATE VALVE	
GLOBE VALVE	
PRESSURE REDUCING VALVE	
WET PIPE ALARM VALVE	
DRY PIPE ALARM VALVE	
DELUGE VALVE	
FIRE DEPARTMENT VALVE	
INSPECTOR'S TEST CONNECTION	
WALL INDICATOR VALVE	
FLOOR STAND VALVE	
FLOW SWITCH	F
PRESSURE SWITCH	PS
STRAINER	

SPRINKLER HEADS

UPRIGHT	
PENDANT	
FLUSH/CONCEALED	
RECESSED	
SIDEWALL	
NON-FREEZE PENDANT	N
NON-FREEZE SIDEWALL	N
EXTENDED THROW SIDEWALL	
SPRINKLER HEAD WITH DEFLECTOR	
EXISTING SPRINKLER HEAD TO REMAIN	E
EXISTING SPRINKLER HEAD TO BE REMOVED	R

KORDA/NEMETH ENGINEERING, INC.
1650 WATERMARK DRIVE
COLUMBUS, OHIO 43215
DESIGNED BY
Tom Jones
DRAWN BY
Michael S. Armstrong
CHECKED BY
KNE JOB # 2000-0110

STATE OF OHIO
BRIAN
BRAAKSMA
52245
REGISTERED
PROFESSIONAL ENGINEER

PAST TIME THEATRE
PERFORMING ARTS CENTER
538 Main Street Coshocton, Ohio

HRJL ARCHITECTS
HAYDEN • REED • JAMES • LIGHTBINDING
20 S. 4th ST. NEWARK, OHIO 43055-5099
PHONE (740) 349-5200 FAX (740) 345-5200

DRAWN BY
CHECKED BY
COMMISSION NO. 2000065
DATE JANUARY 17, 2001
REVISIONS

F3.1

OF SHEETS

© COPYRIGHT 2000
HAYDEN, REED, JAMES & LIGHTBINDING ARCHITECTS, INC.
THESE DRAWINGS HAVE BEEN PREPARED SOLELY FOR USE ON THE PAST TIME THEATRE PROJECT AT 538 MAIN STREET, COSHOCTON, OHIO. THEY ARE NOT TO BE USED FOR ANY OTHER PURPOSE OR ON ANY OTHER PROJECT OR IN OTHER LOCATIONS WITHOUT THE EXPRESS AND PERMISSION OF THE ARCHITECTS. REPRODUCTION IS PROHIBITED.

YCHEN H:\Projects\2000\2000-0110 Past Time Theater\Mechanical\Drawings\D0110F31.dwg DATE: JAN 17, 2001 TIME: 1:12 PM

GENERAL NOTES:

1. COORDINATE ALL DEMOLITION WITH TRIBUNE STAFF.

CODED NOTES:

1. DEMOLITION IN THIS AREA IS TO INCLUDE REMOVAL OF ALL EXISTING HVAC AND PLUMBING EQUIPMENT, DEVICES, PIPING, DUCTWORK, AND ACCESSORIES. ALL NEW HVAC AND PLUMBING SYSTEMS ARE BEING INSTALLED.

2. EXISTING DUCTWORK SERVING TRIBUNE TO REMAIN.

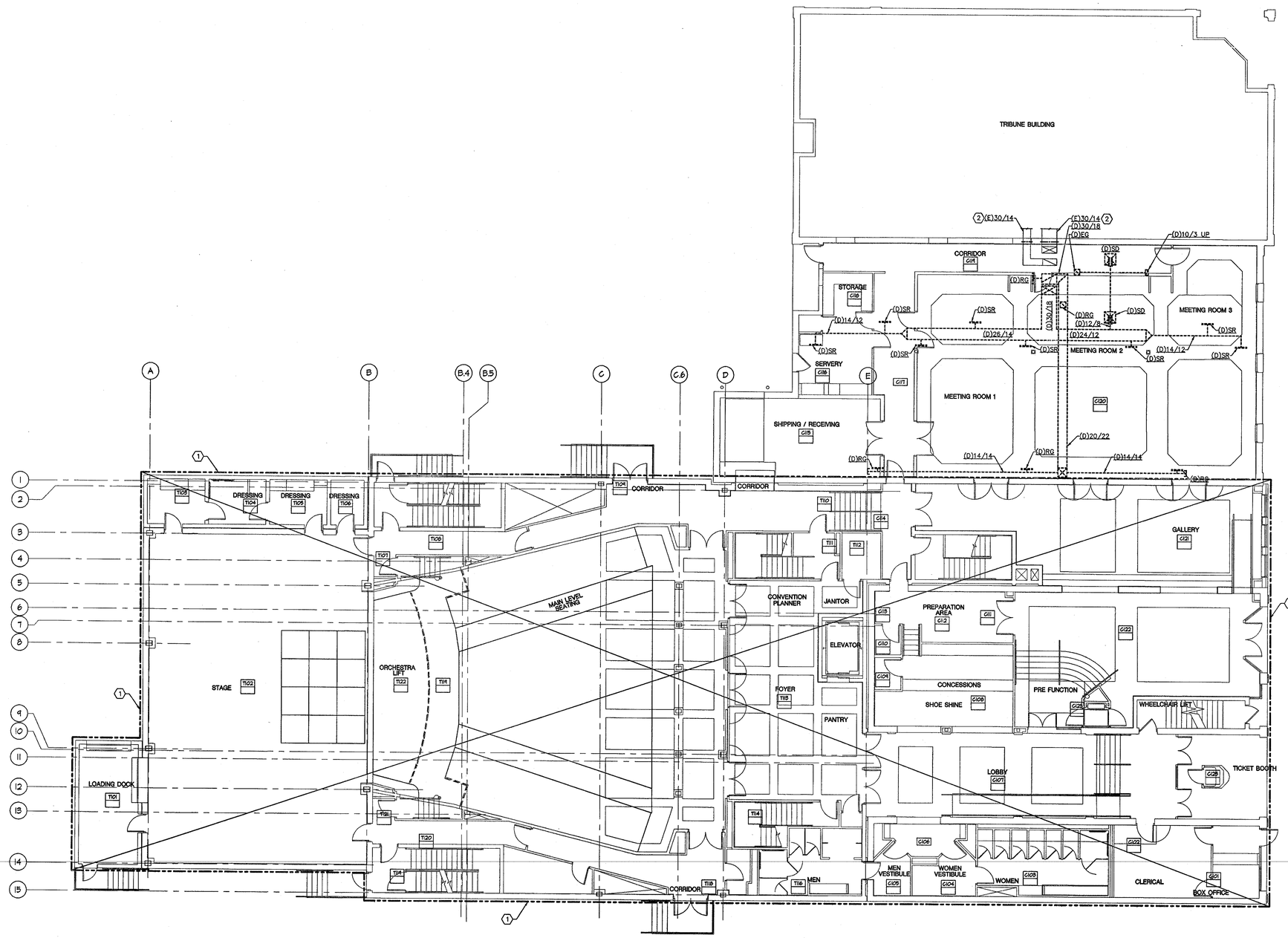

A FIRST FLOOR PLAN

SELECTIVE DEMOLITION

1/8" = 1'-0"

N

KORDA/NEMETH ENGINEERING, INC.
1650 WATERMARK DRIVE
COLUMBUS, OHIO 43215

DESIGNED BY Mdnk Nichols
DRAWN BY Mdnk Nichols
CHECKED BY
KNE JOB # 2000-0110

BRIAN BRAAKSMA 52245 PROFESSIONAL ENGINEER STATE OF OHIO

PAST TIME THEATRE

PERFORMING ARTS CENTER

538 Main Street Coshocton, Ohio

HRJL

HARDEN • REID • JAMES • LICHTENBERG

DRAWN BY
CHECKED BY
COMMISSION NO. 2000088
DATE JANUARY 11, 2001
REVISIONS

M1.1

OF SHEETS

©COPYRIGHT 2000
HARDEN, REID, JAMES & LICHTENBERG ARCHITECTS, INC.
THESE DRAWINGS AND SPECS PREPARED BY HARDEN, REID, JAMES & LICHTENBERG ARCHITECTS, INC. ARE INSTRUMENTS OF THEIR SERVICE AND ARE NOT SUITABLE FOR USE ON OTHER PROJECTS OR IN OTHER LOCATIONS WITHOUT THE EXPRESS WRITTEN PERMISSION OF THE ARCHITECT. REPRODUCTION IS PROHIBITED.

mnichols H:\Projects\2000\2000-0110 Past Time Theater\Mechanical\Drawings\00110M11.dwg DATE: JAN 15, 2001 TIME: 5:12 PM

GENERAL NOTES:

1. REFER TO ARCHITECTURAL REFLECTED CEILING PLAN FOR FINAL AIR DEVICE LOCATIONS.

2. DUCTWORK CONNECTIONS TO DIFFUSERS AND TERMINAL BOXES TO BE NECK SIZE UNLESS OTHERWISE NOTED.

3. PROVIDE VOLUME DAMPERS PER THE SPECIFICATIONS AND DETAIL B/ M5.0.

⬡ CODED NOTES:

1. DUCT RISES TO LEVEL ABOVE.

2. 6"ø DRYER VENT RISES TO LEVEL ABOVE.

3. BAROMETRIC DAMPER IN FLUE.

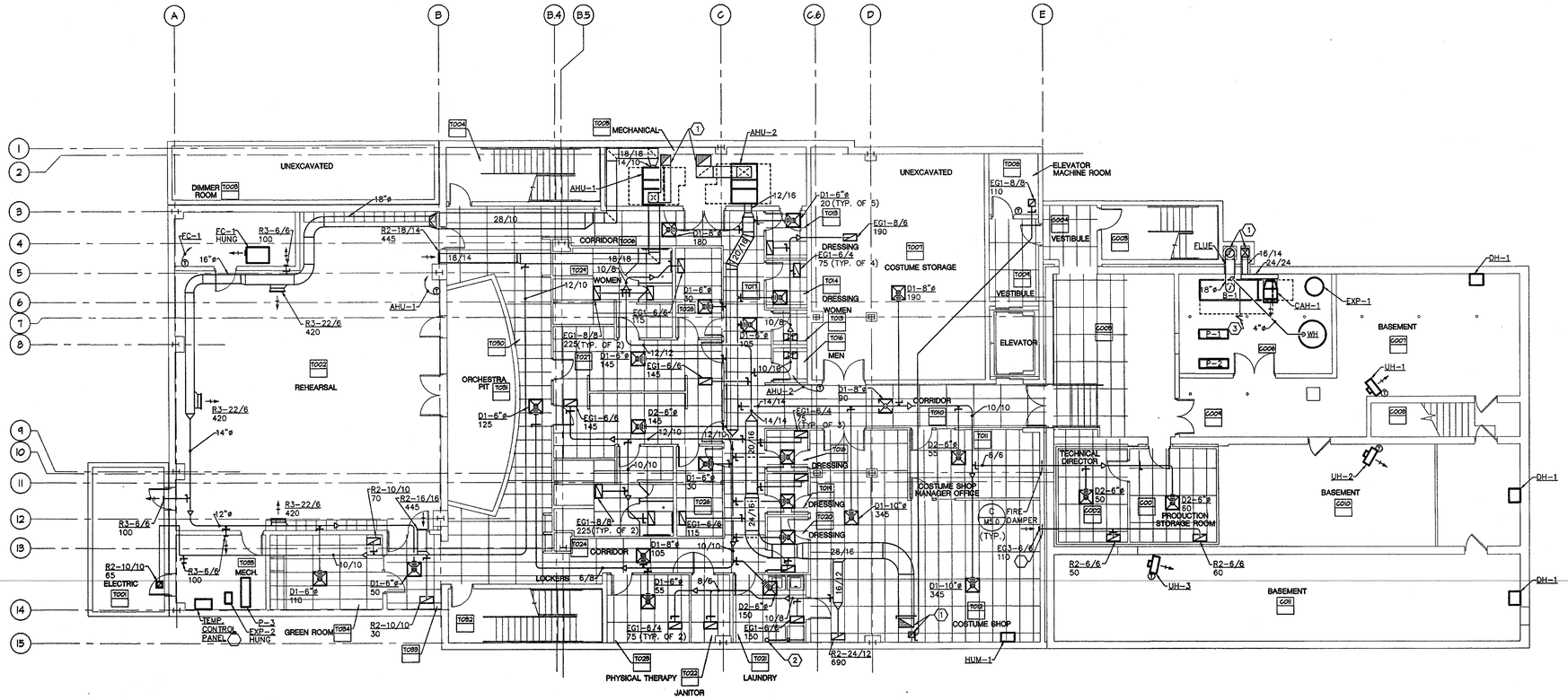

A BASEMENT FLOOR PLAN

1/8"=1'-0"

KORDA/NEMETH ENGINEERING, INC.
1650 WATERMARK DRIVE
COLUMBUS, OHIO 43215

DESIGNED BY MJN
DRAWN BY MJN
CHECKED BY
KNE JOB # 2000-0110

STATE OF OHIO PROFESSIONAL ENGINEER
BRIAN BRAAKSMA 52245

PASTIME THEATRE

PERFORMING ARTS CENTER
538 Main Street Coshocton, Ohio

HRJL ARCHITECTS
WARDEN • REID • JAMES • LICHTENBERG

DRAWN BY
CHECKED BY
COMMISSION NO. 2000045
DATE JANUARY 17, 2001
REVISIONS

M2.0

OF SHEETS

© COPYRIGHT 2000
HARDEN, REID, JAMES & LICHTENBERG ARCHITECTS, INC.
THESE DOCUMENTS HAVE BEEN PREPARED SPECIFICALLY FOR THE TITLED PROJECT. THEY ARE NOT SUITABLE FOR USE ON ANY OTHER PROJECT. ANY REUSE WITHOUT WRITTEN VERIFICATION OR ADAPTATION BY THE ARCHITECT, REPRODUCTION IS PROHIBITED.

mnichols H:\Projects\2000\2000-0110 Past Time Theater\Mechanical\Drawings\0011DM20.dwg DATE: JAN 15, 2001 TIME: 9:07 PM

GENERAL NOTES:

1. REFER TO ARCHITECTURAL REFLECTED CEILING PLAN FOR FINAL AIR DEVICE LOCATIONS.

2. DUCTWORK CONNECTIONS TO DIFFUSERS AND TERMINAL BOXES TO BE NECK SIZE UNLESS OTHERWISE NOTED.

3. PROVIDE VOLUME DAMPERS PER THE SPECIFICATIONS AND DETAIL B/ M5.0.

⬡ CODED NOTES:

1. DUCT RISES TO LEVEL ABOVE.
2. 6"ø DRYER VENT DROPS TO LEVEL BELOW.
3. CONTRACTOR SHALL NOT PENETRATE OF HATCHED STRUCTURAL WALL.
4. DUCT RISES BETWEEN JOISTS.
5. 48/48 AIROLITE K6776 OUTSIDE AIR LOUVER.
6. DUCT DROPS TO LEVEL BELOW.
7. FIRE DAMPER IN DUCT.
8. PROVIDE DRYER WALL CAP.
9. SUPPLY DUCT ROUTED BELOW BALCONY.
10. RUN DUCTWORK BETWEEN JOISTS.

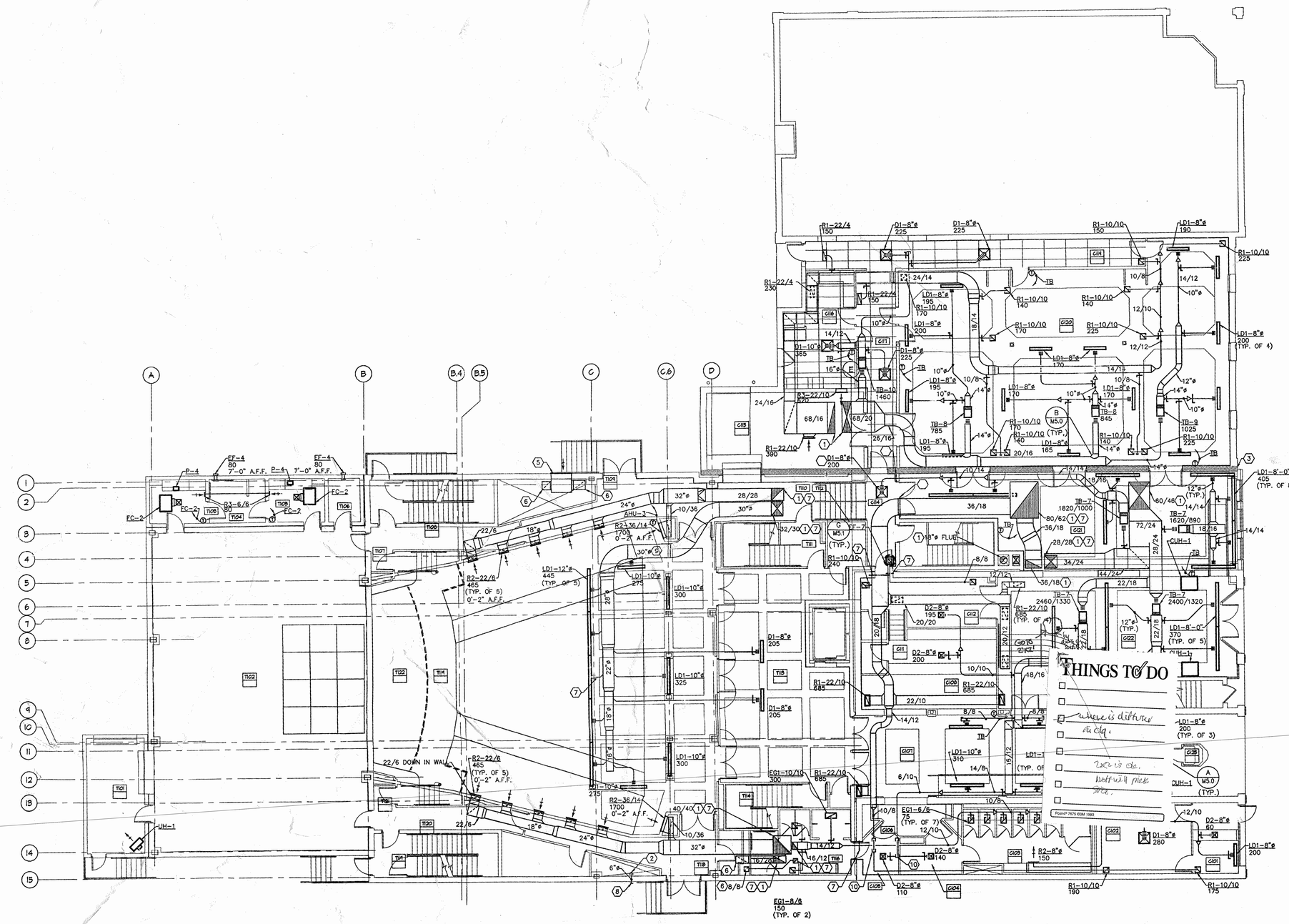

A FIRST FLOOR PLAN

1/8"=1'-0"

PASTIME THEATRE

PERFORMING ARTS CENTER

538 Main Street Coshocton, Ohio

HRJ

KARDIA REC

ISSUED FOR PERMIT

ISSUED FOR BID

ISSUED FOR CONSTRUCTION

DRAWN BY

CHECKED BY

COMMISSION NO. 2000088

DATE JANUARY 11, 2001

REVISIONS

M2.1

KORDA/NEMETH ENGINEERING, INC.
1650 WATERMARK DRIVE

STATE OF OHIO

0110 Post Time Theater\Mechanical\Drawings\00 0M21.dwg DATE: JAN 17, 2001 TIME: 3:53 PM

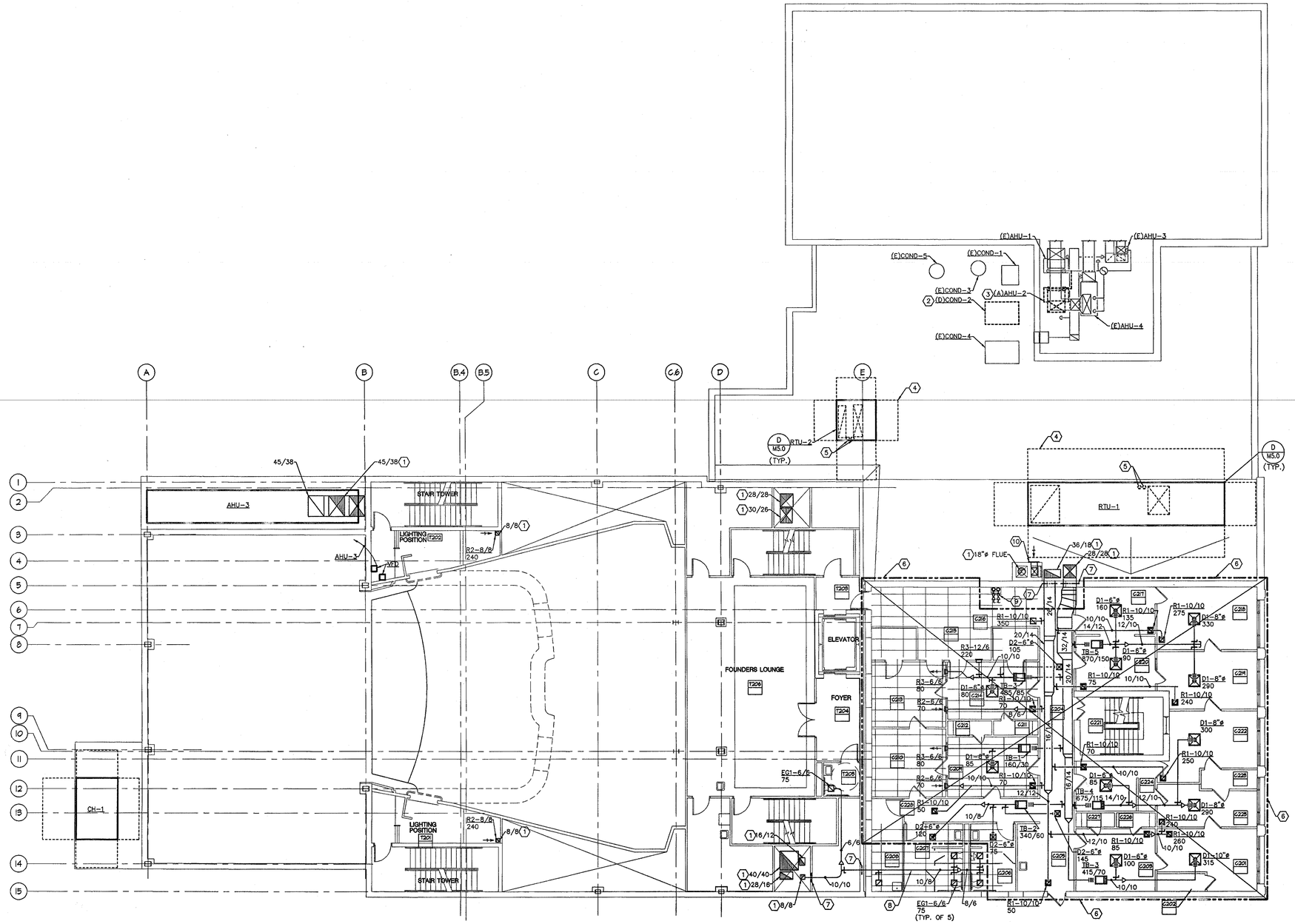

A SECOND FLOOR PLAN

1/8"=1'-0"

GENERAL NOTES:

1. REFER TO ARCHITECTURAL REFLECTED CEILING PLAN FOR FINAL AIR DEVICE LOCATIONS.

2. DUCTWORK CONNECTIONS TO DIFFUSERS AND TERMINAL BOXES TO BE NECK SIZE UNLESS OTHERWISE NOTED.

3. PROVIDE VOLUME DAMPERS PER THE SPECIFICATIONS AND DETAIL B/ M5.0.

⬡ CODED NOTES:

1. DUCT RISES TO LEVEL ABOVE.

2. REMOVE EXISTING CONDENSING UNIT. PATCH AND REPAIR ROOF TO LIKE NEW CONDITION.

3. ABANDON EXISTING AIR HANDLING UNIT IN PLACE. DISCONECT POWER AND RECOVER REFRIGERANT CHARGE.

4. DASHED LINE AROUND ROOFTOP UNIT INDICATES MANUFACTERS RECOMMENDED SERVICE CLEARANCE AND IS NOT TO BE OBSTRUCTED.

5. HOT WATER PIPING TO ROOFTOP HEATING COIL PENETRATES ROOF INSIDE ROOF CURB IN THIS LOCATION.

6. NOT FOR CONSTRUCTION DURING PHASE 1 CONSTRUCTION.

7. INSTALL FIRE DAMPER IN DUCT.

8. COORDINATE INSTALLATION WITH PHASE 2 CONSTRUCTION.

9. INSTALL HOT WATER PIPING BRANCH TAPS FOR PHASE 2 CONSTRUCTION WITH CLOSED VALVES.

10. INSTALL COMBUSTION AIR LOUVER IN WALL AT TOP OF CHASE.

PASTIME THEATRE

PERFORMING ARTS CENTER

538 Main Street Coshocton, Ohio

HRJL

DRAWN BY

CHECKED BY

COMMISION NO. 2000068

DATE JANUARY 17, 2001

M2.2

OF SHEETS

© COPYRIGHT 2000

BRIAN BRAAKSMA 52245 REGISTERED PROFESSIONAL ENGINEER STATE OF OHIO

KORDA/NEMETH ENGINEERING, INC.
1650 WATERMARK DRIVE
COLUMBUS, OHIO 43215

DESIGNED BY MJN

DRAWN BY MJN

CHECKED BY

KNE JOB # 2000-0110

mnichols H:\Projects\2000\2000-0110 Post Time Theater\Mechanical\Drawings\M0110M22.dwg DATE: JAN 16, 2001 TIME: 11:06 AM

GENERAL NOTES:

1. REFER TO ARCHITECTURAL REFLECTED CEILING PLAN FOR FINAL AIR DEVICE LOCATIONS.

2. DUCTWORK CONNECTIONS TO DIFFUSERS AND TERMINAL BOXES TO BE NECK SIZE UNLESS OTHERWISE NOTED.

3. PROVIDE VOLUME DAMPERS PER THE SPECIFICATIONS AND DETAIL B/ M5.0.

⬡ CODED NOTES:

1. DUCT RISES TO LEVEL ABOVE.

2. FIRE DAMPER IN DUCT.

3. NOT FOR CONSTRUCTION DURING PHASE 1 CONSTRUCTION.

4. COORDINATE INSTALLATION WITH PHASE 2 CONSTRUCTION.

5. RELIEF CONNECTION TO RETURN AIR DUCT.

6. INSTALL HOT WATER BRANCH PIPING TAPS FOR PHASE 2 CONSTRUCTION WITH CLOSED VALVES.

7. DUCT DROPS TO WITHIN FOUNDER'S LOUNGE CEILING SPACE.

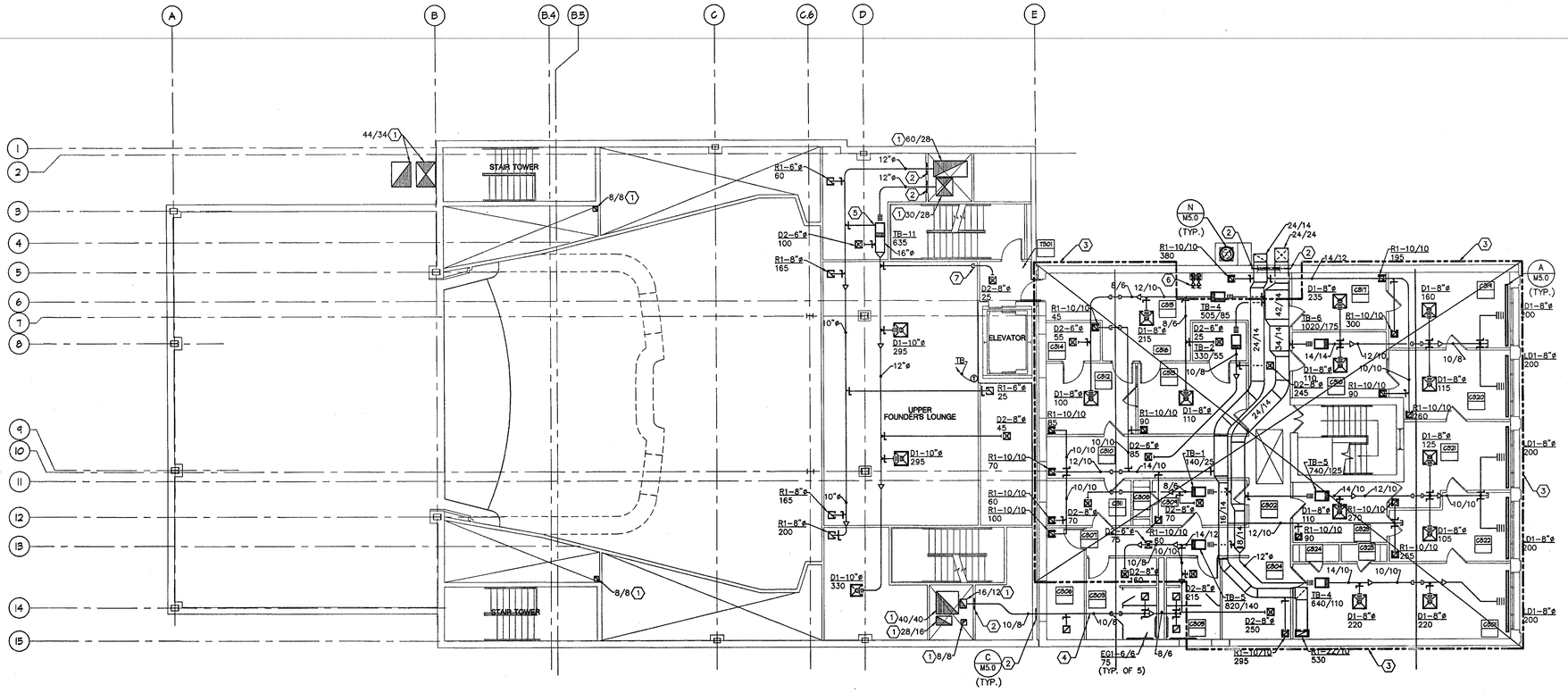

A THIRD FLOOR PLAN

1/8"=1'-0"

PAST TIME THEATRE

PERFORMING ARTS CENTER

538 Main Street Coshocton, Ohio

HRJL ARCHITECTS

HARDEN • REID • JAMES • LICHTENBERG

DRAWN BY

CHECKED BY

COMMISSION NO. 2000049

DATE JANUARY 17, 2001

REVISIONS

M2.3

OF SHEETS

© COPYRIGHT 2000
HARDEN, REID, JAMES & LICHTENBERG ARCHITECTS, INC.
THESE DRAWINGS WERE WERE PREPARED SPECIFICALLY FOR THE TITLED PROJECT. THEY ARE NOT SUITABLE FOR USE ON OTHER PROJECTS BY ANY PERSON WHATSOEVER WITHOUT THE APPROVAL AND PARTICIPATION OF THIS ARCHITECT. REPRODUCTION IS PROHIBITED.

BRIAN BRAAKSMA 52245 REGISTERED PROFESSIONAL ENGINEER STATE OF OHIO

KORDA/NEMETH ENGINEERING, INC.
1650 WATERMARK DRIVE
COLUMBUS, OHIO 43215
DESIGNED BY MJN
DRAWN BY MJN
CHECKED BY
KNE JOB # 2000-0110

mnichols H:\Projects\2000\2000-0110 Post Time Theater\Mechanical\Drawings\00110M23.dwg DATE: JAN 17, 2001 TIME: 8:41 AM

GENERAL NOTES:

1. REFER TO ARCHITECTURAL REFLECTED CEILING PLAN FOR FINAL AIR DEVICE LOCATIONS.

2. DUCTWORK CONNECTIONS TO DIFFUSERS AND TERMINAL BOXES TO BE NECK SIZE UNLESS OTHERWISE NOTED.

3. PROVIDE VOLUME DAMPERS PER THE SPECIFICATIONS AND DETAIL B/ M5.0.

CODED NOTES:

1. DUCT RISES TO LEVEL ABOVE.

2. FIRE DAMPER IN DUCT.

3. MOUNT RETURN GRILLE IN WALL ABOVE DOOR.

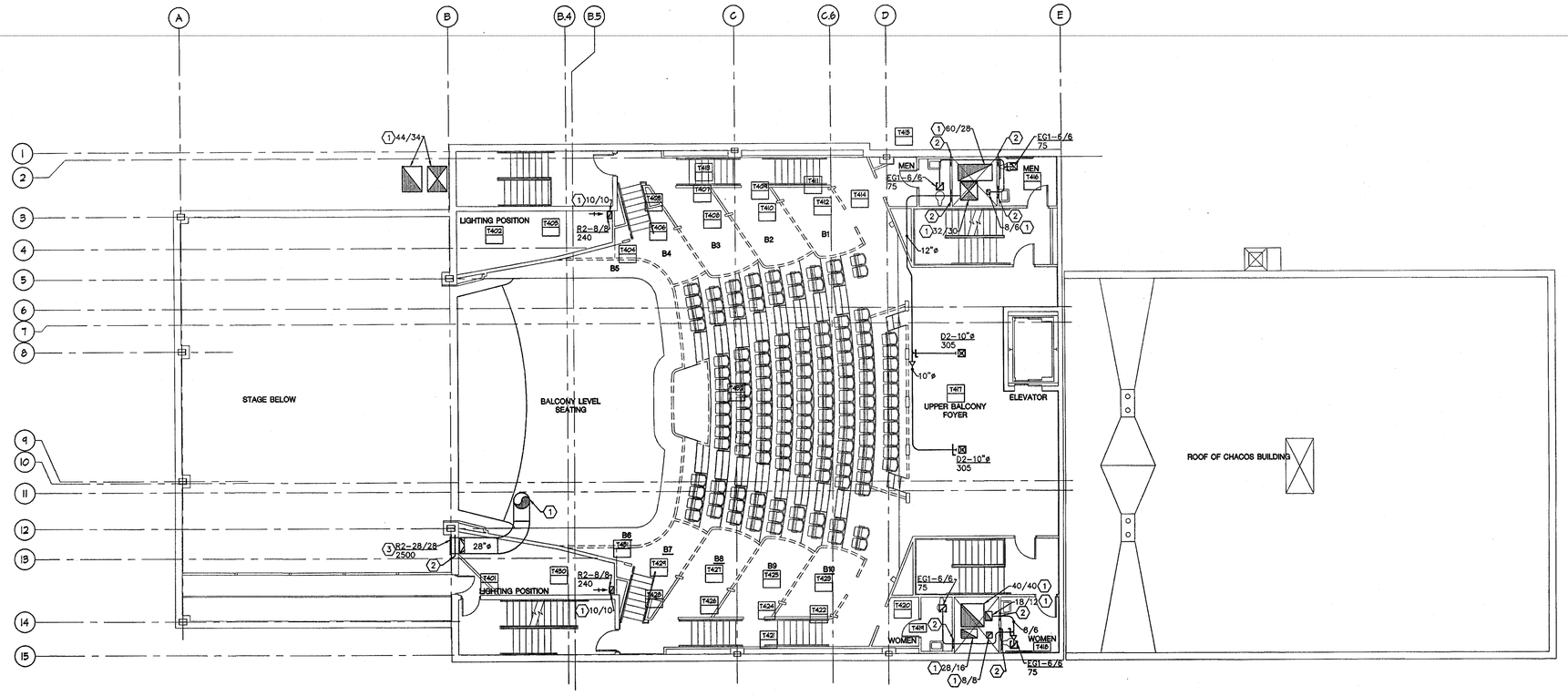

A FOURTH FLOOR PLAN

1/8"=1'-0"

N

PASTIME THEATRE

PERFORMING ARTS CENTER

538 Main Street Coshocton, Ohio

HRJL ARCHITECTS

HARGROVE-REICH JANNUSCH-LUCHTENBERG

55 E. 4th ST. 1000 BKK CENTER CINCINNATI, OHIO 45202-4008
PHONE (513) 369-4000 FAX (513) 345-4000

DRAWN BY

CHECKED BY

COMMISSION NO. 2000068

DATE JANUARY 17, 2001

REVISIONS

M2.4

OF SHEETS

© COPYRIGHT 2000
HARGROVE, REICH, JANNUSCH & LUCHTENBERG ARCHITECTS, INC.

THESE DOCUMENTS HAVE BEEN PREPARED AS INSTRUMENTS OF SERVICE FOR USE ON THIS AND NOT SUITABLE FOR USE ON OTHER PROJECTS OR IN OTHER LOCATIONS WITHOUT THE EXPRESS, WRITTEN AUTHORIZATION OF THE ARCHITECTS. REPRODUCTION IS PROHIBITED.

STATE OF OHIO REGISTERED PROFESSIONAL ENGINEER
BRIAN BRAAKSMA
52245
REGISTERED ARCHITECT

KORDA/NEMETH ENGINEERING, INC.
1650 WATERMARK DRIVE
COLUMBUS, OHIO 43215
DESIGNED BY MJN
DRAWN BY MJN
CHECKED BY
KNE JOB # 2000-0110

mnichols H:\Projects\2000\2000-0110 Post Time Theater\Mechanical\Drawings\00110M24.dwg DATE: JAN 16, 2001 TIME: 2:26 PM

GENERAL NOTES:

1. REFER TO ARCHITECTURAL REFLECTED CEILING PLAN FOR FINAL AIR DEVICE LOCATIONS.

2. DUCTWORK CONNECTIONS TO DIFFUSERS AND TERMINAL BOXES TO BE NECK SIZE UNLESS OTHERWISE NOTED.

3. PROVIDE VOLUME DAMPERS PER THE SPECIFICATIONS AND DETAIL B/ M5.0.

CODED NOTES:

1. INSTALL DUCT BETWEEN JOISTS.
2. DUCT DROPS TO LEVEL BELOW.
3. CONNECT DUCT TO EXHAUST FAN ON ROOF.
4. INSTALL FIRE DAMPER IN DUCT.

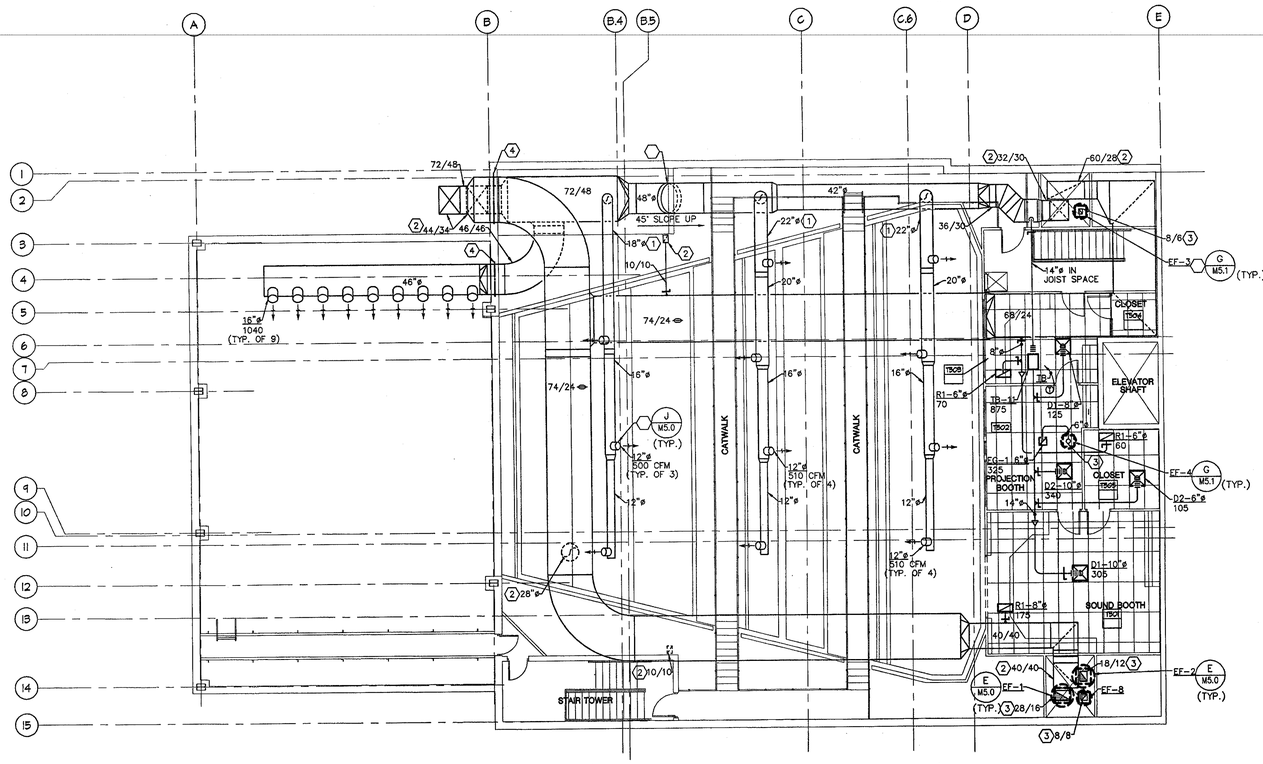

A FIFTH FLOOR PLAN

1/8"=1'-0"

N

PASTIME THEATRE

PERFORMING ARTS CENTER

538 Main Street Coshocton, Ohio

HRJL

HARDEN • REID • JAMES • LUCHTENBERG

DRAWN BY

CHECKED BY

COMMISSION NO. 2000068

DATE JANUARY 17, 2001

REVISIONS

M2.5

OF SHEETS

© COPYRIGHT 2000
HARDEN, REID, JAMES & LUCHTENBERG
ARCHITECTS, INC.
THESE DOCUMENTS HAVE BEEN PREPARED SPECIFICALLY FOR THE USE OF HRJL ARCHITECTS, INC. AND NOT SUITABLE FOR USE ON OTHER PROJECTS OR IN OTHER LOCATIONS WITHOUT THE APPROVAL AND PARTICIPATION OF THE ARCHITECT. REPRODUCTION IS PROHIBITED.

STATE OF OHIO
BRIAN BRAAKSMA
52245
REGISTERED
PROFESSIONAL ENGINEER

KORDA/NEMETH ENGINEERING, INC.
1650 WATERMARK DRIVE
COLUMBUS, OHIO 43215

DESIGNED BY MJN

DRAWN BY MJN

CHECKED BY

KNE JOB # 2000-0110

mnichols H:\Projects\2000\2000-0110 Past Time Theater\Mechanical\Drawings\00110M25.dwg DATE: JAN 16, 2001 TIME: 3:04 PM

GENERAL NOTES:

1. REFER TO ARCHITECTURAL REFLECTED CEILING PLAN FOR FINAL AIR DEVICE LOCATIONS.

2. DUCTWORK CONNECTIONS TO DIFFUSERS AND TERMINAL BOXES TO BE NECK SIZE UNLESS OTHERWISE NOTED.

3. PROVIDE VOLUME DAMPERS PER THE SPECIFICATIONS AND DETAIL B/ M5.0.

⬡ CODED NOTES:

1. NISTALL PIPING TO DRAIN INDIRECTLY FROM DEHUMIDIFIERS.

2. CONNECT 1/2" DOMESTIC COLD WATER LINE TO HUMIDIFIER. COORDINATE FINAL CONNECTION TO COLD WATER SUPPLY WITH PLUMBING CONTRACTOR.

3. HOT WATER SUPPLY AND RETURN PIPING RISES TO LEVEL ABOVE.

4. INSTALL PIPING TO DRAIN INDIRECTLY FROM FAN COIL UNIT.

5. CHILLED WATER SUPPLY AND RETURN PIPING RISE AND CONNECT TO CHILLER ON ROOF.

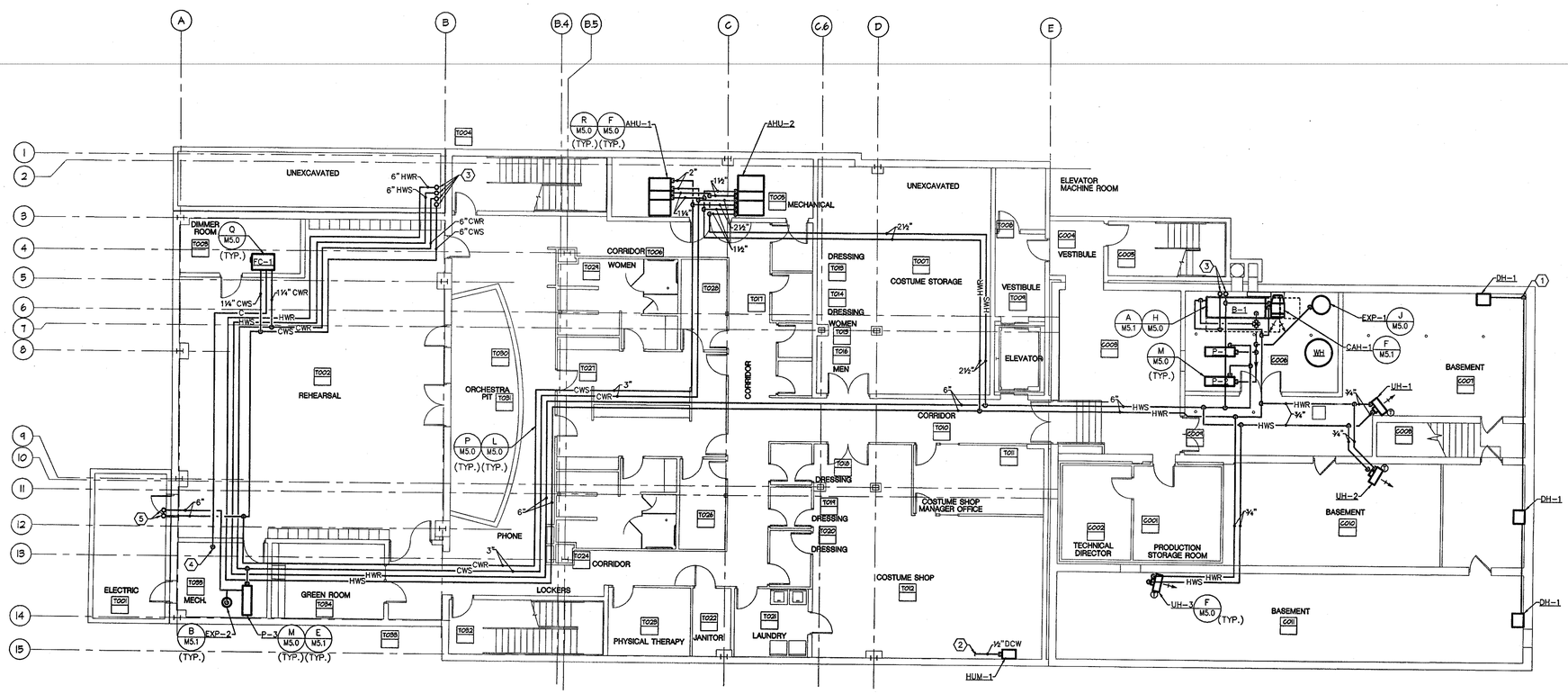

A BASEMENT FLOOR PLAN

1/8"=1'-0"

KORDA/NEMETH ENGINEERING, INC.
1650 WATERMARK DRIVE
COLUMBUS, OHIO 43215

DESIGNED BY MJN
DRAWN BY MJN
CHECKED BY

KNE JOB # 2000-0110

BRIAN BRAAKSMA 52245
PROFESSIONAL ENGINEER
STATE OF OHIO

PAST TIME THEATRE

PERFORMING ARTS CENTER
538 Main Street Coshocton, Ohio

HRJL ARCHITECTS
HARDEN • REID • JARNES • LICHTENBERG

DRAWN BY
CHECKED BY
COMMISSION NO. 2000049
DATE JANUARY 11, 2001
REVISIONS

M3.0

OF SHEETS

©COPYRIGHT 2000
HARDEN, REID, JARNES & LICHTENBERG ARCHITECTS, INC.
THESE DRAWINGS MAY NOT BE PREPARED FOR ANY OTHER PROJECT OR BE USED ON OTHER PROJECTS OR IN OTHER LOCATIONS THEY ARE NOT SUITABLE FOR USE BY ANY PERSON OTHER THAN THE ARCHITECT. REPRODUCTION IS PROHIBITED.

rmichols H:\Projects\2000\2000-0110 Past Time Theater\Mechanical\Drawings\0011OM30.dwg DATE: JAN 16, 2001 TIME: 3:52 PM

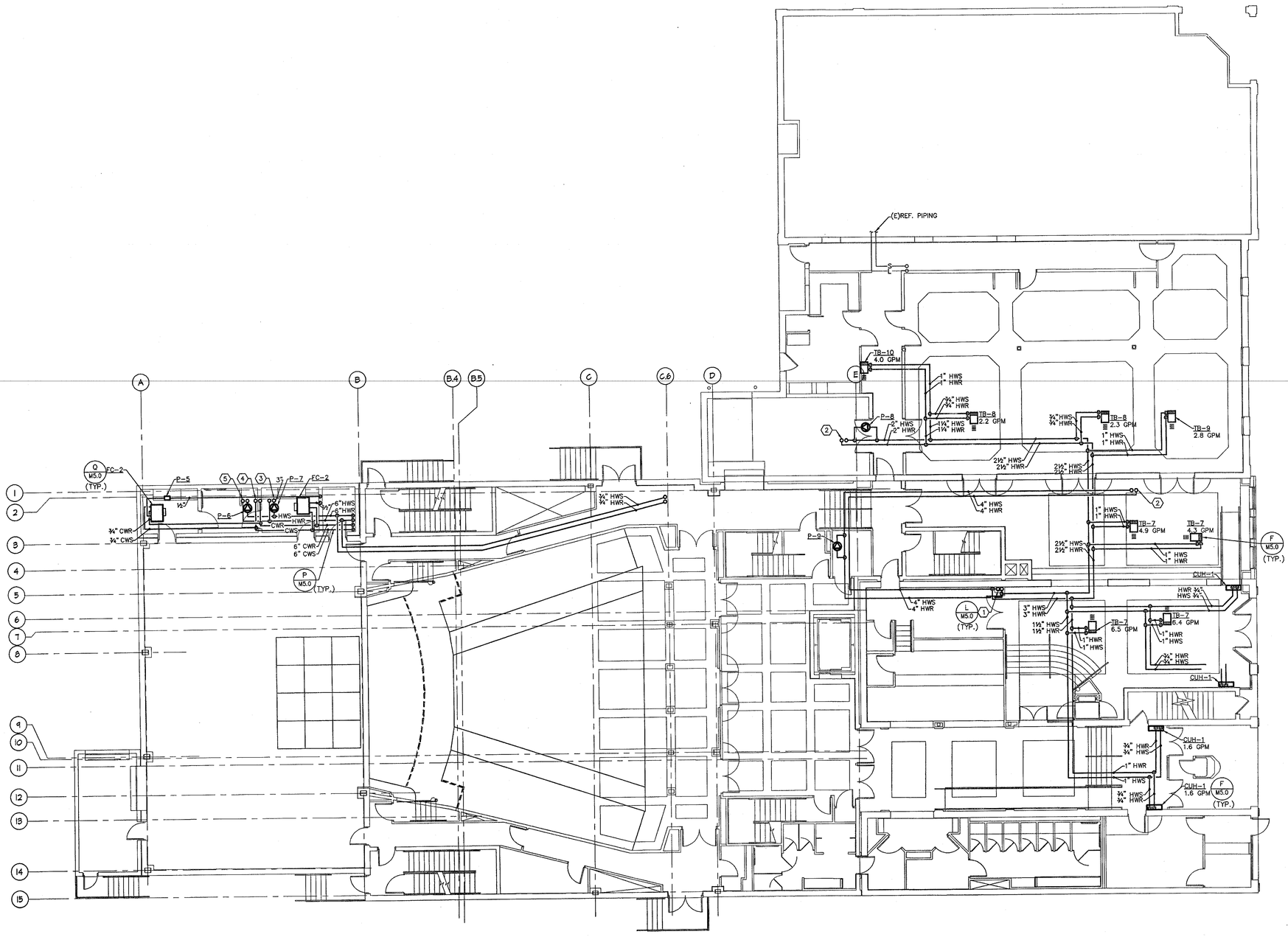

A FIRST FLOOR PLAN

1/8"=1'-0"

CODED NOTES:

1. PROVIDE 2" HOT WATER SUPPLY AND RETURN PIPING TO LEVEL ABOVE.

2. PROVIDE HOT WATER SUPPLY AND RETURN PIPING, SIZE AS NOTED ON DRAWINGS, TO ROOFTOP UNIT ABOVE. ROUTE PIPING INSIDE UNIT CURB ONLY.

3. PROVIDE 3" HOT WATER SUPPLY AND RETURN PIPING TO AIR HANDLING UNIT ABOVE. ROUTE PIPING INSIDE UNIT CURB ONLY.

4. PROVIDE 6" CHILLED WATER SUPPLY AND RETURN PIPING TO AIR HANDLING UNIT ABOVE. ROUTE PIPING INSIDE UNIT CURB ONLY.

5. PROVIDE 4" HOT WATER SUPPLY AND RETURN PIPING TO AIR HANDLING UNIT ABOVE. ROUTE PIPING INSIDE UNIT CURB ONLY.

PASTIME THEATRE

PERFORMING ARTS CENTER

538 Main Street Coshocton, Ohio

HRJL ARCHITECTS

HARDEN • REID • JAMES • LUCHTENBERG

DRAWN BY

CHECKED BY

COMMISSION NO. 2000065

DATE JANUARY 17, 2001

REVISIONS

M3.1

OF SHEETS

© COPYRIGHT 2000
HARDEN, REID, JAMES & LUCHTENBERG ARCHITECTS, INC.

THESE DOCUMENTS HAVE BEEN PREPARED SPECIFICALLY FOR THE UTILES PROJECT. THEY ARE NOT SUITABLE FOR USE ON OTHER PROJECTS OR IN OTHER LOCATIONS WITHOUT THE APPROVAL AND PARTICIPATION OF THE ARCHITECT. REPRODUCTION IS PROHIBITED.

STATE OF OHIO
BRIAN BRAAKSMA
52245
REGISTERED
PROFESSIONAL ENGINEER

KORDA/NEMETH ENGINEERING, INC.
1650 WATERMARK DRIVE
COLUMBUS, OHIO 43215

DESIGNED BY MJN

DRAWN BY MJN

CHECKED BY

KNE JOB # 2000-0110

mnichols H:\Projects\2000\2000-0110 Past Time Theater\Mechanical\Drawings\00110M.11.dwg DATE: JAN 17, 2001 TIME: 5:43 PM

GENERAL NOTES:

1. REFER TO ARCHITECTURAL REFLECTED CEILING PLAN FOR FINAL AIR DEVICE LOCATIONS.

2. DUCTWORK CONNECTIONS TO DIFFUSERS AND TERMINAL BOXES TO BE NECK SIZE UNLESS OTHERWISE NOTED.

3. PROVIDE VOLUME DAMPERS PER THE SPECIFICATIONS AND DETAIL B/ M5.0.

CODED NOTES:

1. PIPING DROPS TO LEVEL BELOW.

2. NOT FOR CONSTRUCTION DURING PHASE 1 CONSTRUCTION.

3. INSTALL HOT WATER BRANCH PIPING TAPS FOR PHASE 2 CONSTRUCTION WITH CLOSED VALVES.

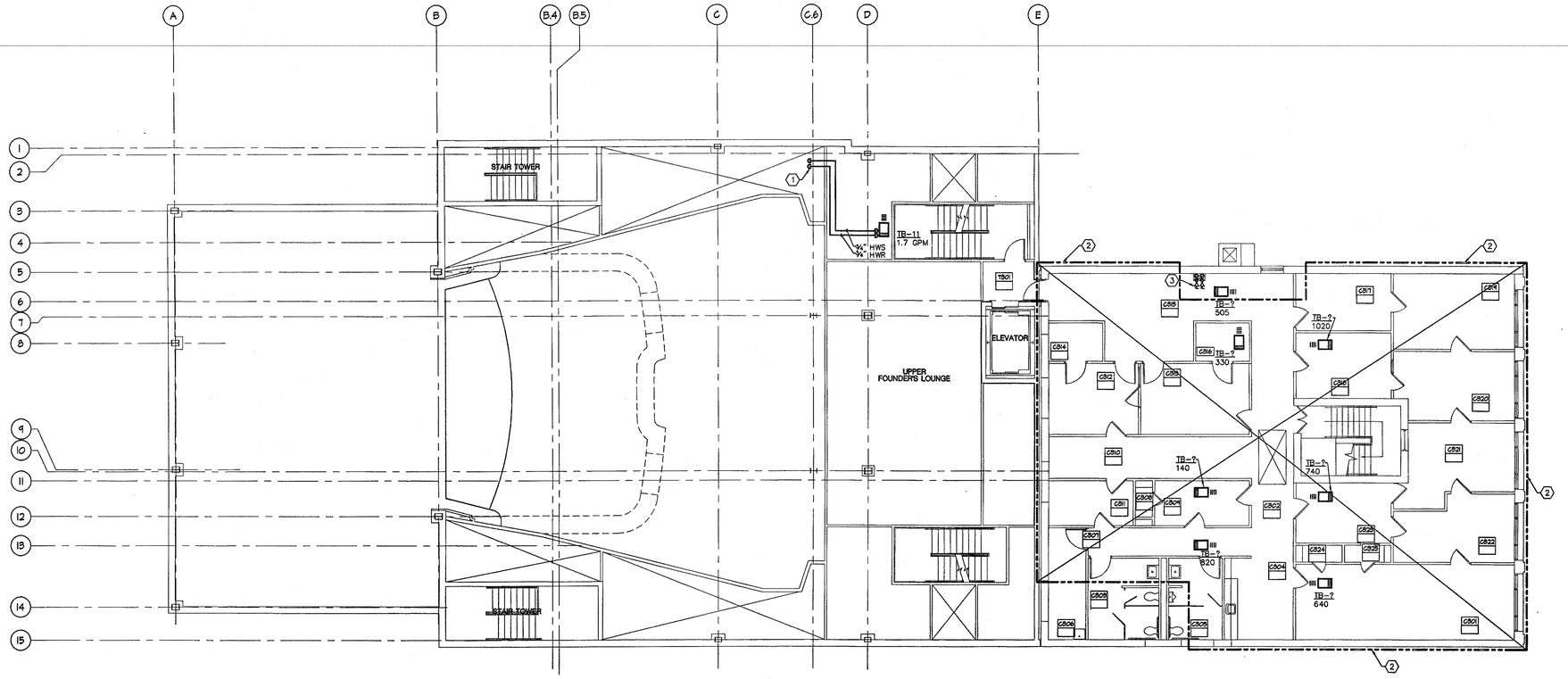

A THIRD FLOOR PLAN

1/8"=1'-0"

N

PASTIME THEATRE

PERFORMING ARTS CENTER

538 Main Street Coshocton, Ohio

HRJL ARCHITECTS

HARDUM • REID • JANNES • LUCHTENBERG

DRAWN BY

CHECKED BY

COMMISSION NO. 2000068

DATE JANUARY 17, 2001

REVISIONS

M3.3

OF SHEETS

© COPYRIGHT 2000
HARDUM, REID, JANNES & LUCHTENBERG ARCHITECTS, INC.

THESE DOCUMENTS HAVE BEEN PREPARED SPECIFICALLY FOR THE TITLED PROJECT. THEY ARE NOT SUITABLE FOR USE ON OTHER PROJECTS OR IN OTHER LOCATIONS WITHOUT THE APPROVAL AND AUTHORIZATION OF THE ARCHITECT. REPRODUCTION IS PROHIBITED.

STATE OF OHIO
BRIAN BRAAKSMA
52245
REGISTERED
PROFESSIONAL ENGINEER

KORDA/NEMETH ENGINEERING, INC.
1650 WATERMARK DRIVE
COLUMBUS, OHIO 43215

DESIGNED BY MJN

DRAWN BY MJN

CHECKED BY

KNE JOB # 2000-0110

mnichols H:\Projects\2000\2000-0110 Past Time Theater\Mechanical\Drawings\00110M33.dwg DATE: JAN 17, 2001 TIME: 11:10 AM

AIR HANDLING UNIT SCHEDULE

UNLESS OTHERWISE NOTED EQUIPMENT BASED ON CARRIER
KEY (WHEEL TYPE ABBREVIATIONS) : F.C.–FORWARD CURVED, B.I.–BACKWARD INCLINED, A.F.–AIRFOIL

UNIT DATA					SUPPLY FAN DATA						MOTOR DATA		
TAG	LOCATION	MODEL	TYPE	MIN. O.A. CFM	CFM	E.S.P. IN. W.G.	T.S.P. IN. W.G.	MODEL	WHEEL TYPE	RPM	HP	VOLTS	PHASE
AHU–1	BASEMENT	CARRIER	39LD03	600	1650	2.00	3.50	UPBLAST	FC	1800	2	460	3
AHU–2	BASEMENT	CARRIER	39LF06	2280	2280	2.00	3.30	UPBLAST	FC	1800	3	460	3
AHU–3	ROOF	WEBCO	CUSTOM	7800	18525	3.00	5.00	CUSTOM	PLUG	1800	15	460	3

	COOLING COIL DATA													
TAG	TOTAL MBH	SENSIBLE MBH	GPM	E.W.T. °F	L.W.T. °F	W.P.D. P.D. FT.	A.P.D. IN. W.G.	AREA FT^2	E.A.T. °F D.B.	E.A.T. °F W.B.	L.A.T. °F D.B.	L.A.T. °F W.B.	COIL ROWS	COIL FINS
AHU–1	73.00	46.64	19.4	42.0	50.16	8.7	0.65	3.6	83.10	69.40	56.29	55.45	6	8
AHU–2	163.81	93.61	35.6	42.0	52.0	39.7	0.98	4.7	92.30	74.80	53.71	53.31	8	8
AHU–3	919	643	199.6	42.0	52.0	19.44	0.68	40.5	83.80	68.20	52.4	52.2	8	8

	PRE–HEATING COIL DATA											FILTER DATA					REMARKS
TAG	MBH	GPM	W.P.D. P.D. FT.	A.P.D. IN. W.G.	AREA FT^2	E.A.T. °F	L.A.T. °F	E.W.T. °F	L.W.T. °F	COIL ROWS	COIL FINS	FACE VELOCITY	F.A. SQ. FT.	TYPE	EFF.	DUTY	
AHU–1	96.18	9.6	1.2	0.29	2.7	45.5	100.78	200	180	2	8	458	3.6	PERM.	60%	PREHEAT	30% ETH. GLYCOL COOLING COIL
AHU–2	129.81	13.0	1.1	0.17	4.7	0	53.52	200	180	1	8	415	5.5	PERM.	60%	PREHEAT	30% ETH. GLYCOL COOLING COIL. SEE HOT WATER COIL SCHEDULE FOR REHEAT COILS
AHU–3	1252	135	3.1	0.33	23.5	1.0	62.7	200	181	2	8	463	40	PERM.	60%	PREHEAT	30% ETH. GLYCOL COOLING COIL. SEE HOT WATER COIL SCHEDULE FOR REHEAT COILS

DESIGN SCHEDULE

	INTERIOR		EXTERIOR	
	D.B.°F	R.H.%	D.B.°F	W.B.°F
SUMMER	74	50	93	75
WINTER	72	30	1.0	–0.6

PUMP SCHEDULE

UNLESS OTHERWISE NOTED EQUIPMENT BASED ON BELL & GOSSETT
KEY: C.C.–CLOSE COUPLED END SUCTION, H.S.C.–FLEXIBLE COUPLED HORIZONTAL SPLIT CASE, F.C.–FLEXIBLE COUPLED END SUCTION, I.L.–IN LINE

TAG	LOCATION	MODEL	FUNCTION	TYPE	GPM	FT. HD.	EFF. %	SUCTION SIZE	DISCHARGE SIZE	IMPELLER DIAMETER	MOTOR DATA RPM	HP	VOLTS	PHASE	REMARKS
P–1	BOILER ROOM	1510 2½" BB	HOT WATER	FC.	240	50	72.85	3"	2½"	7.750"	1760	7.50	480	3	
P–2	BOILER ROOM	1510 2½" BB	HOT WATER	FC.	240	50	72.85	3"	2½"	7.750"	1760	7.50	480	3	
P–3	MECH. ROOM #T035	1510 2½" BB	GLYCOL	FC.	265	56	74.03	3"	2½"	8.250"	1750	7.50	480	3	30% GLYCOL SOLUTION
P–4	MECH. ROOM #T035	ROTH 5528	GLYCOL	FC.	3.8	60	–	2"	1¼"	8.250"	1750	0.22	120	1	30% GLYCOL SOLUTION
P–5	DRESSING ROOMS STAGE	LITTLE GIANT VCC–20ULS	CONDENSATE	–	0.8	19.8	–	–	–	8.250"	1750	1/30	115	1	
P–6	DRESSING ROOMS STAGE	SERIES 80 2½"X 2½"X 7	HOT WATER COIL PUMP	FC.	135	12	–	2½"	2½"	7"	1750	1.5	120	1	PRE–HEAT COIL AHU–3
P–7	DRESSING ROOMS STAGE	SERIES 60 2AA	HOT WATER COIL PUMP	FC.	85	12	–	2"	2"	4.5"	1750	0.5	120	1	RE–HEAT COIL AHU–3
P–8	SHIPPING #C115	SERIES 60 1AA	HOT WATER COIL PUMP	FC.	27	8	–	1"	1"	4.25	1750	1.25	120	1	HEATING COIL RTU–2
P–9	OFFICE #T112	SERIES 60 2A	HOT WATER COIL PUMP	FC.	115	12	–	2"	2"	5.5	1750	1	120	1	HEATING COIL RTU–1

HOT WATER UNIT HEATER SCHEDULE

UNLESS OTHERWISE NOTED EQUIPMENT BASED ON TRANE

UNIT DATA					AIR DATA				WATER DATA				MOTOR DATA				REMARKS
TAG	LOCATION	MODEL	TYPE	MBH	CFM	E.A.T. °F	L.A.T. °F	A.P.D. IN. W.G.	E.W.T. °F	L.W.T. °F	GPM	W.P.D. FT. HD.	HP	RPM	VOLTS	PHASE	
UH–1	BASEMENT	18	S	6.8	280	55	70	0.25	200	186	1.0	0.014	1/25	1050	120	1	
UH–2	BASEMENT	18	S	5.0	280	55	70	0.25	200	186	0.41	0.01	1/25	1050	120	1	
UH–3	BASEMENT	18	S	6.8	280	55	70	0.25	200	186	1.0	0.014	1/25	1050	120	1	

AIR COOLED CHILLER SCHEDULE

UNLESS OTHERWISE NOTED EQUIPMENT BASED ON CARRIER

UNIT DATA				COMPRESSOR DATA			EVAPORATOR DATA				UNIT ELECTRICAL DATA			REMARKS
TAG	LOCATION	MODEL	CAPACITY TONS	NO. OF COMP.	CAPACITY CONTROL STEPS	REFRIGERANT TYPE	GPM	E.W.T. °F	L.W.T. °F	W.P.D. FT. HD.	KW	VOLTS	PHASE	
CH–1	ROOF	30GX–115	100.4	2	6	R134a	262.1	52.0	42.0	17.5	115	480	3	30% GLYCOL USED IN CHILLER

HOT WATER BOILER SCHEDULE

UNLESS OTHERWISE NOTED EQUIPMENT BASED ON BRYAN BOILERS

UNIT DATA								GAS DATA		WATER DATA					BLOWER MOTOR			REMARKS
TAG	LOCATION	MODEL	TYPE	FUEL	BURNER	INPUT MBH	OUTPUT MBH	PRESSURE AVAILABLE	DESIGN PRESSURE	OPERATING PRESSURE	E.W.T. °F	L.W.T. °F	GPM	RELIEF PRESSURE	HP	VOLTS	PHASE	
B–1	BOILER ROOM	CL–300	HOT WATER	NAT. GAS	FORCED DRAFT	3000	2400			35 PSI	180	200	240	60 PSI	1/2	120	1	

GRILLE, REGISTER & DIFFUSER SCHEDULE

DIFFUSER TAG: TAG— D1–8"ø —NECK SIZE; CFM— 250

GRILLE/REGISTER TAG: TAG— R1–10/10 —NECK SIZE; CFM— 250

UNLESS OTHERWISE NOTED EQUIPMENT BASED ON TITUS
NECK SIZES ARE GIVEN ON DRAWINGS. WHERE DIFFUSERS ARE ON BOTTOM OF SUPPLY DUCT PROVIDE EXTRACTION TYPE COMBO UNIT.

TAG	LOCATION	MODEL	FUNCTION	FACE TYPE	FRAME TYPE	LOUVER TYPE	MATERIAL	FINISH	DAMPER	N.C. MAX.	REMARKS
D1	AS SHOWN	TMS	SUPPLY	24" X 24"	TYPE 3 LAY–IN	THREE TIERED CONES	STEEL	#26 WHITE	–	20	
D2	AS SHOWN	TMS	SUPPLY	12" X 12"	TYPE 3 LAY–IN	THREE TIERED CONES	STEEL	#26 WHITE	–	20	
R1	AS SHOWN	50F	RETURN	EGGCRATE	TYPE 1 SURFACE	3/4"SPACING 0° DEFLECTION	STEEL	#26 WHITE	OPPOSED BLADE	20	
R2	AS SHOWN	350ZRL	RETURN	BLADE	TYPE 1 SURFACE	3/4"SPACING 0° DEFLECTION	STEEL	#26 WHITE	OPPOSED BLADE	20	
R3	AS SHOWN	300RS	SUPPLY	BLADE	TYPE 1 SURFACE	3/4"SPACING 45° DOUBLE DEFLECTION	STEEL	#26 WHITE	OPPOSED BLADE	20	
LD1	AS SHOWN	ML–39	SUPPLY	LINEAR	CONCEALED	2 SLOTS 1" SLOTS	ALUMINUM	#26 WHITE	–	20	PROVIDE INSULATED PLENUM
LD2	AS SHOWN	ML–39	SUPPLY	LINEAR	TYPE 11 CONCEALED	3 SLOTS 1" SLOTS	ALUMINUM	#26 WHITE	–	20	PROVIDE INSULATED PLENUM
EG1	AS SHOWN	50F	EXHAUST	EGGCRATE	TYPE 1 SURFACE	3/4"SPACING 0° DEFLECTION	STEEL	#26 WHITE	BACKDRAFT	20	

FAN SCHEDULE

UNLESS OTHERWISE NOTED EQUIPMENT BASED ON LOREN COOK
KEY: CENT.–CENTRIFUGAL, PROP.–PROPELLER, F.C.–FORWARD CURVED, B.I.–BACKWARD INCLINED, A.F.–AIRFOIL, A.T.L.–ACROSS THE LINE, P.W.–PART WINDING, A.T.–AUTO TRANSFORMER

UNIT DATA													MOTOR DATA				SOUND RATING IN SONES	REMARKS
TAG	LOCATION	MODEL	FUNCTION	FAN TYPE	WHEEL TYPE	TIP SPEED FPM	TOTAL S.P. "W.G.	CFM	RPM	TYPE OF CONTROL	TYPE OF DRIVE	TYPE OF DAMPER	HP	RPM	VOLTS	PHASE		
RAF–1	AHU–3	WEBCO	RETURN AIR	B.I.	CENT.	–	2.00	15000	1600	INTERLOCKED W/ AHU–3	VFD	NONE	20	1750	480	3	–	
EF–1	ROOF	165R 6B	EXHAUST	B.I.	CENT.	5628	0.70	3010	1303	INTERLOCKED W/ AHU–2	BELT	BACKDRAFT	1.0	1750	208	3	19.4	TYPE ACRU–B
EF–2	ROOF	150R 4B	EXHAUST	B.I.	CENT.	4523	0.50	1950	1152	TIME CLOCK	BELT	BACKDRAFT	0.5	1750	120	1	12.9	TYPE ACRU–B
EF–3	ROOF	60C 2B	EXHAUST	B.I.	CENT.	3756	0.30	150	1417	TIME CLOCK	BELT	BACKDRAFT	0.167	1750	120	1	8.3	TYPE ACE–B
EF–4	ROOF	70C 3B	EXHAUST	B.I.	CENT.	4707	0.30	325	1776	SWITCH	BELT	BACKDRAFT	0.25	1750	208	3	12.7	TYPE ACE–B, WITH INDICATOR LIGHT
EF–5	DRESSING ROOMS	8870	EXHAUST	B.I.	CENT.	–	–	80	–	LIGHT SWITCH	DIRECT	BACKDRAFT	–	–	120	1	4.0	NUTONE THRU–WALL
EF–6	DRESSING ROOMS	8870	EXHAUST	B.I.	CENT.	–	–	80	–	LIGHT SWITCH	DIRECT	BACKDRAFT	–	–	120	1	4.0	NUTONE THRU–WALL
EF–7	ROOF	70C 2B	EXHAUST	B.I.	CENT.	3976	0.30	250	1500	LIGHT SWITCH	BELT	BACKDRAFT	0.167	1750	208	3	9.7	TYPE ACE–B
EF–8	ROOF	60C 2B	EXHAUST	B.I.	CENT.	3255	0.30	110	1228	THERMOSTAT	BELT	BACKDRAFT	0.167	1750	120	1	6.6	TYPE ACE–B

EXPANSION TANK SCHEDULE

UNLESS OTHERWISE NOTED EQUIPMENT BASED ON ???

TAG	LOCATION	MODEL	FUNCTION	TANK VOLUME (GALLONS)	ACCEPTANCE VOLUME (GALLONS)	MINIMUM PRESSURE (PSIG)	MAXIMUM PRESSURE (PSIG)	AIR PRECHARGE (PSIG)	REMARKS
EXP–1	BOILER ROOM	D–200V	HW	110	34	35	55	35	
EXP–2	BOILER ROOM	D–20	CW	10.9	2.5	25	60	25	GLYCOL

HOT WATER COMBUSTION AIR HEATER SCHEDULE

UNLESS OTHERWISE NOTED EQUIPMENT BASED ON WING

UNIT DATA					AIR DATA				WATER DATA				MOTOR DATA				REMARKS
TAG	LOCATION	MODEL	TYPE	MBH	CFM	E.A.T. °F	L.A.T. °F	A.P.D. IN. W.G.	GPM	E.W.T.	L.W.T.	W.P.D. FT.HD.	HP	RPM	VOLTS	PHASE	
CAH–1	BOILER ROOM	FAS–U	19	59.8	1335	0	61	0.10	17.6	200	190	5.0	1/2	1150	120	1	

HOT WATER COIL SCHEDULE

UNLESS OTHERWISE NOTED EQUIPMENT BASED ON CARRIER

				AIR DATA			WATER DATA				COIL		FACE AREA	FACE VELOCITY FPM	REMARKS
TAG	LOCATION	MODEL	MBH	E.A.T. °F	L.A.T. °F	A.P.D. IN. W.G.	E.W.T. °F	L.W.T. °F	GPM	W.P.D. FT. HD.	ROWS	FINS			
RHC–2	AHU–2	39LF06	131.69	60	114.29	0.20	200	180	13.2	1.6	2	8	4.7	487.3	RE–HEAT COIL INSIDE AHU
RHC–3	AHU–3	CUSTOM	841.4	60	101.47	0.18	200	179.7	85.15	10.42	1	11	30	624	RE–HEAT COIL INSIDE AHU
RHC–4	RTU–1	50JK064	1084.7	55	113.15	0.16	200	180.04	115.0	7.85	1	8	29	591.19	HEAT COIL INSIDE RTU
RHC–5	RTU–2	50TJ016	242.19	70	113.1	0.22	200	180	26.6	1.2	1	11	30	500	HEAT COIL INSIDE RTU

HOT WATER CABINET UNIT HEATER SCHEDULE

UNLESS OTHERWISE NOTED EQUIPMENT BASED ON TRANE

UNIT DATA					AIR DATA				WATER DATA				MOTOR DATA				REMARKS
TAG	LOCATION	MODEL	TYPE	MBH	CFM	E.A.T. °F	L.A.T. °F	A.P.D. IN. W.G.	E.W.T. °F	L.W.T. °F	GPM	W.P.D. FT. HD.	HP	RPM	VOLTS	PHASE	
CUH–1	LOBBY ENTRANCE	FFM030	FORCE–FLO	23.3	277	70	100	0.05	200	180	1.55	3.2	0.05	800	120	1	CEILING MOUNTED

STATE OF OHIO — BRIAN BRAAKSMA 52245 — REGISTERED PROFESSIONAL ENGINEER

KORDA/NEMETH ENGINEERING, INC.
1650 WATERMARK DRIVE
COLUMBUS, OHIO 43215
DESIGNED BY MATT NICHOLS
DRAWN BY MATT NICHOLS
CHECKED BY

KNE JOB # 2000–0110

PASTIME THEATRE

PERFORMING ARTS CENTER

538 Main Street Coshocton, Ohio

HRJL

HARDEN • REID • JAHNES • LUCHTENBERG

DRAWN BY
CHECKED BY
COMMISSION NO. 2000065
DATE JANUARY 17, 2001
REVISIONS

M4.0

OF SHEETS

© COPYRIGHT 2000 HARDEN, REID, JAHNES & LUCHTENBERG ARCHITECTS, INC.

THESE DOCUMENTS HAVE BEEN PREPARED SPECIFICALLY FOR THE TITLED PROJECT. THEY ARE NOT SUITABLE FOR USE ON OTHER PROJECTS OR IN OTHER LOCATIONS WITHOUT THE APPROVAL AND PARTICIPATION OF THE ARCHITECT. REPRODUCTION IS PROHIBITED.

mnichols H:\Projects\2000\2000–0110 Past Time Theater\Mechanical\Drawings\00110M40.dwg DATE: JAN 17, 2001 TIME: 6:40 PM

ROOFTOP AIR HANDLING UNIT SCHEDULE

UNLESS OTHERWISE NOTED EQUIPMENT BASED ON

UNIT DATA							SUPPLY FAN DATA				EVAPORATOR DATA								CONDENSER FAN DATA					COMPRESSOR DATA						REMARKS
TAG	LOCATION	MODEL	MIN. O.A. CFM	TOTAL CFM	EXTERNAL S.P. "W.G.	FILTER EFFICIENCY	RPM	HP	VOLTS	PHASE	TOTAL MBH	SENSIBLE MBH	TOTAL CFM	E.A.T. DB	E.A.T. WB	L.A.T. DB	L.A.T. WB	REFRIG.	NO. OF FANS	HP	RPM	VOLTS	PHASE	NO. OF COMP.	CAP. EA.	HP	RPM	VOLTS	PHASE	
RTU-1	GALLERY ROOF	50JK064	7270	13000	1.50"		482	15	480	3	682.17	456.54	13000	88.2	71.0	54.5	54.5	R-22	4	1	1140	480	3	2						
RTU-2	TRIBUNE ROOF	50TJQ16	1580	4500	1.00"		1216	3.7	480	3	177.52	128.74	4500	85.4	68.5	57.9	56.0	R-22	3	0.5	1050	480	3	2						

FAN COIL UNIT SCHEDULE

UNLESS OTHERWISE NOTED EQUIPMENT BASED ON ???

UNIT DATA				FAN DATA					FAN MOTOR DATA				COOLING COIL DATA									GENERAL INFORMATION					REMARKS
TAG	LOCATION	MODEL	TYPE	MIN. O.A. CFM	CFM	TOTAL S.P. "W.G.	RPM	NO. OF FANS	HP	RPM	VOLTS	PHASE	TOTAL MBH	SENSIBLE MBH	WATER DATA GPM	E.W.T.	L.W.T.	P.D. HD FT.	E.A.T. °F D.B.	E.A.T. °F W.B.	L.A.T. °F D.B.	L.A.T. °F W.B.	CONTROL PACKAGE	ARRANGEMENT R.A.	ARRANGEMENT O.A.	ARRANGEMENT S.A.	FILTER	
FC-1	DIMMER ROOM	42BH08	HORIZ.	0	850	0.8	1000	1	0.25	1750	120	1	32.5	23.0	5.7	42	56	4.8	80.0	67.0	56.3	55.1						
FC-2	DRESSING ROOMS	42CK02	HORIZ.	0	120	0.05	LOW	1	1/30	LOW	120	1	6	4.4	1.0	42	52	3.6	80.0	67.0	55.0	55.0						

TERMINAL BOX SCHEDULE

UNLESS OTHERWISE NOTED EQUIPMENT BASED ON TITUS

NOTE: REFER TO PLANS FOR BALANCE OF INDIVIDUAL TERMINAL BOXES.

UNIT DATA			TYPE		BOX SIZE	CFM RANGE	MAX. N.C. LEVEL	MAX. S.P. DROP	HEATING COIL						REMARKS
TAG	LOCATION	MODEL	VAV	CAV					MBH	GPM	WATER Δt	E.A.T. °F	L.A.T. °F	MAX. COIL S.P. "W.G.	
TB-1	AS SHOWN	DESV 3000	●		4"ø	160-45	25	0.75	2.3	0.3	20	55	100	0.05	1 ROW COIL
TB-2	AS SHOWN	DESV 3000	●		6"ø	340-80	25	0.75	5.0	0.5	20	55	100	0.05	1 ROW COIL
TB-3	AS SHOWN	DESV 3000	●		7"ø	485-105	25	0.75	7.1	0.7	20	55	100	0.07	2 ROW COIL
TB-4	AS SHOWN	DESV 3000	●		8"ø	675-145	25	0.75	9.9	1.0	20	55	100	0.14	2 ROW COIL
TB-5	AS SHOWN	DESV 3000	●		10"ø	870-230	25	0.75	12.7	1.3	20	55	100	0.11	2 ROW COIL
TB-6	AS SHOWN	DESV 3000	●		12"ø	1020-325	25	0.75	14.9	1.5	20	55	100	0.12	2 ROW COIL
TB-7	AS SHOWN	DESV 3000	●		16"ø	2420-580	25	0.75	38.3	6.5	20	55	100	0.19	2 ROW COIL
TB-8	AS SHOWN	DESV 3000	●		10"ø	845	25	0.75	18.3	2.3	20	55	100	0.31	2 ROW COIL
TB-9	AS SHOWN	DESV 3000	●		12"ø	1025	25	0.75	22.2	2.8	20	55	100	0.31	2 ROW COIL
TB-10	AS SHOWN	DESV 3000	●		14"ø	1460-450	25	0.75	31.6	4.0	20	55	100	0.08	2 ROW COIL
TB-11	AS SHOWN	ZECV	●		12"ø	1090	25	0.75	–	–	–	–	–	–	BYPASS TERMINAL

BRIAN BRAAKSMA 52245
STATE OF OHIO PROFESSIONAL ENGINEER

KORDA/NEMETH ENGINEERING, INC.
1650 WATERMARK DRIVE
COLUMBUS, OHIO 43215
DESIGNED BY MATT NICHOLS
DRAWN BY MATT NICHOLS
CHECKED BY
KNE JOB # 2000-0110

PASTIME THEATRE

PERFORMING ARTS CENTER
538 Main Street Coshocton, Ohio

HRJL ARCHITECTS
HARDEN • REID • JAVIES • LICHTENBERG

DRAWN BY
CHECKED BY
COMMISSION NO. 2000088
DATE JANUARY 17, 2001
REVISIONS

M4.1

OF SHEETS

© COPYRIGHT 2000
HARDEN, REID, JAVIES & LICHTENBERG ARCHITECTS, INC.
THESE DOCUMENTS ARE NOT PREPARED SPECIFICALLY FOR THIS SITE OR PROJECT; THEY ARE NOT SUITABLE FOR USE ON OTHER PROJECTS OR IN OTHER LOCATIONS WITHOUT THE EXPRESS WRITTEN PERMISSION OF THE ARCHITECTS. REPRODUCTION IS PROHIBITED.

mnichols H:\Projects\2000\2000-0110 Past Time Theater\Mechanical\Drawings\0011DM41.dwg DATE: JAN 17, 2001 TIME: 12:03 PM

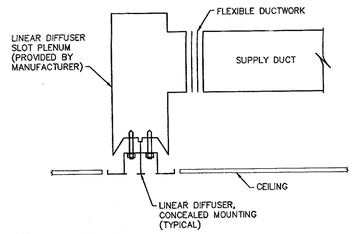

A DETAIL
LINEAR DIFFUSER N.T.S.

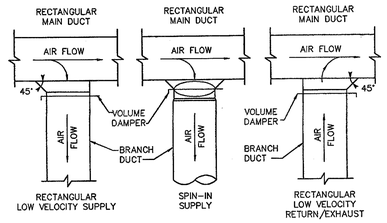

B DETAIL
TYPICAL DUCT CONNECTIONS N.T.S.

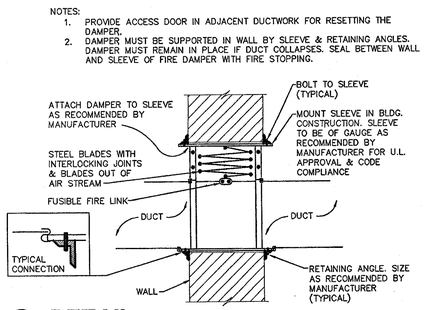

C DETAIL
FIRE DAMPER INSTALLATION N.T.S.

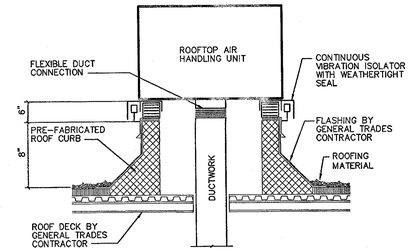

D DETAIL
ROOFTOP AIR HANDLING UNIT N.T.S.

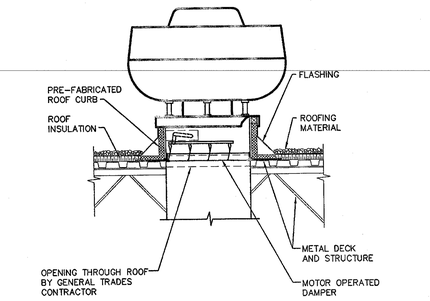

E DETAIL
ROOF MOUNTED UPBLAST FAN N.T.S.

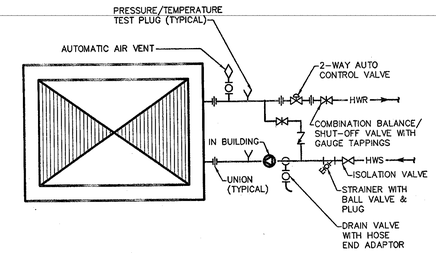

F DETAIL
HEATING COIL PIPING (2-WAY VALVE) N.T.S.

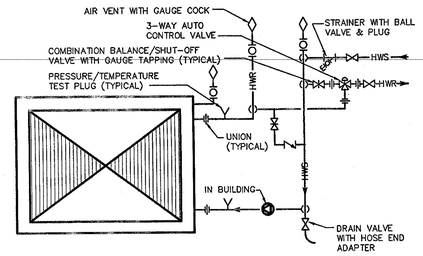

G DETAIL
HEATING HOT WATER COIL PIPING (AHU-3) (3-WAY VALVE) N.T.S.

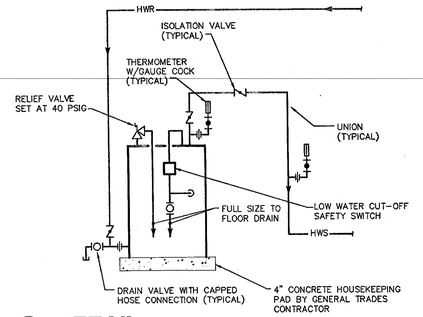

H DETAIL
BOILER PIPING, B-1 N.T.S.

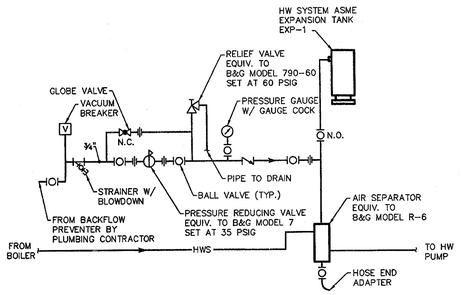

J DETAIL
HOT WATER MAKE-UP WATER & EXP. TANK PIPING N.T.S.

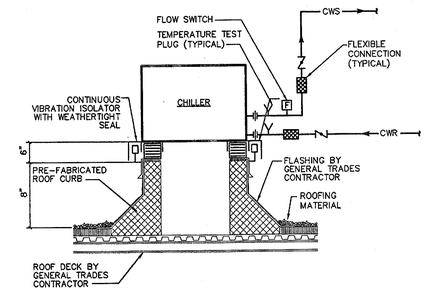

K DETAIL
CHILLER PIPING N.T.S.

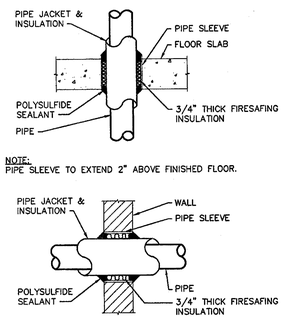

L DETAIL
FLOOR/WALL PENETRATIONS N.T.S.

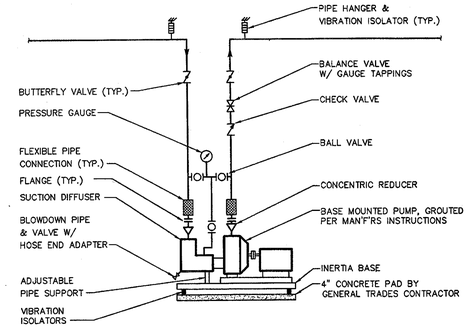

M DETAIL
END SUCTION PUMP PIPING, P-1, P-2, P-3 N.T.S.

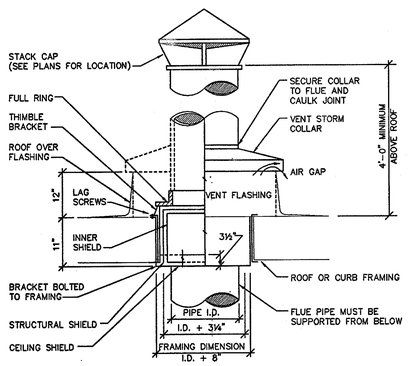

N DETAIL
FLUE-ROOF PENETRATIONS N.T.S.

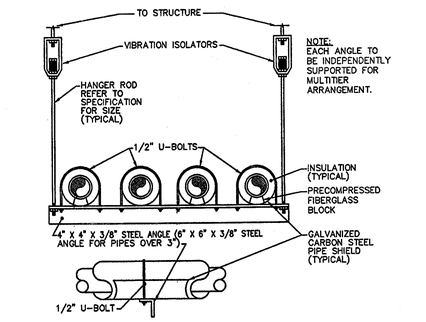

P DETAIL
TYPICAL PIPE TRAPEZE HANGER N.T.S.

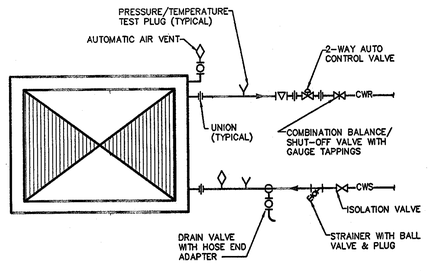

Q DETAIL
CHILLED WATER COIL PIPING 2-WAY VALVE (FAN COIL UNITS ONLY) N.T.S.

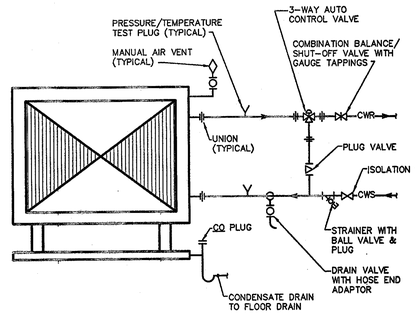

R DETAIL
CHILLED WATER COIL PIPING 3-WAY VALVE (AHU-1,2,3) N.T.S.

BRIAN BRAAKSMA 52245 STATE OF OHIO PROFESSIONAL ENGINEER

KORDA/NEMETH ENGINEERING, INC.
1650 WATERMARK DRIVE
COLUMBUS, OHIO 43215
DESIGNED BY MATT NICHOLS
DRAWN BY MATT NICHOLS
CHECKED BY
KNE JOB # 2000-0110

PASTIME THEATRE

PERFORMING ARTS CENTER
538 Main Street Coshocton, Ohio

HRJL ARCHITECTS
DRAWN BY
CHECKED BY
COMMISSION NO. 2000048
DATE JANUARY 17, 2001
REVISIONS

M5.0
OF SHEETS

©COPYRIGHT 2000
HARRELL REID, JANSEN & LICHTENBERG
ARCHITECTS, INC.
THESE DRAWINGS WERE BEING PREPARED SPECIFICALLY FOR THE STATED PROJECT AND ARE NOT TO BE USED FOR OTHER PROJECTS OR AT OTHER LOCATIONS WITHOUT THE APPROVAL AND PARTICIPATION OF THE ARCHITECTS. REPRODUCTION IS PROHIBITED.

mnichols H:\Projects\2000\2000-0110 Post Time Theater\Mechanical\Drawings\M0010M50.dwg DATE: JAN 17, 2001 TIME: 1:07 PM

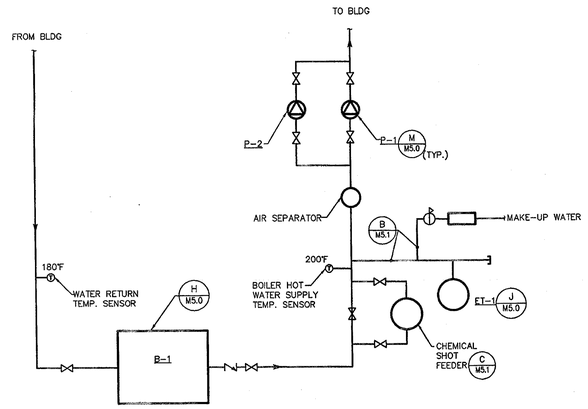

A DIAGRAM
HEATING HOT WATER SYSTEM N.T.S.

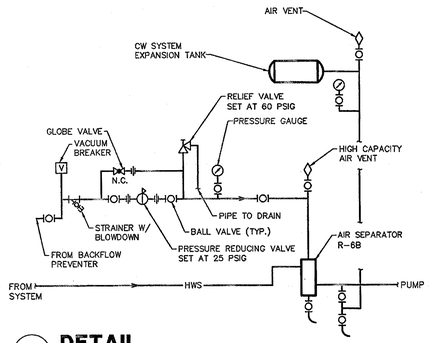

B DETAIL
CHILLED WATER MAKE-UP & EXP. TANK PIPING N.T.S.

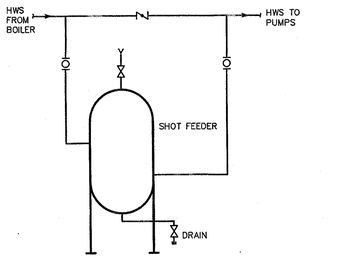

C DETAIL
CHEMICAL SHOT FEEDER N.T.S.

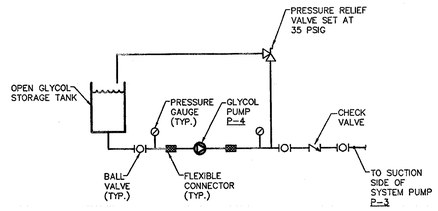

D DETAIL
GLYCOL PUMP PIPING N.T.S.

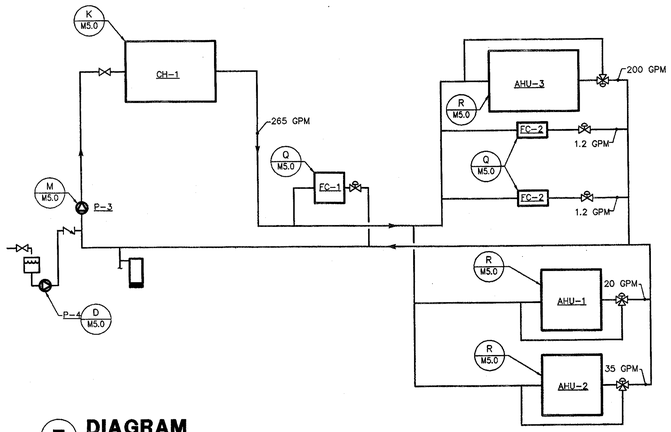

E DIAGRAM
CHILLED WATER SYSTEM N.T.S.

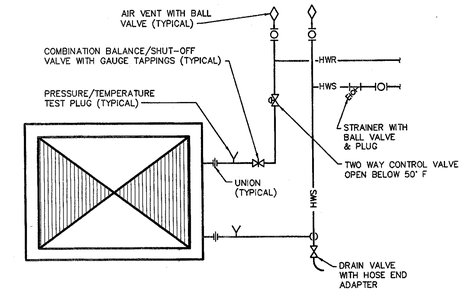

F DETAIL
COMBUSTION AIR HEATER
UNIT HEATER & CABINET UNIT HEATER PIPING N.T.S.

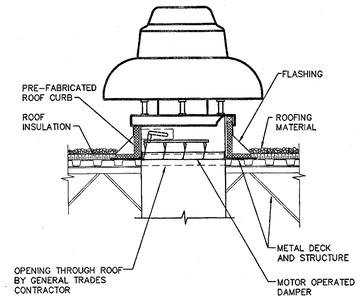

E DETAIL
ROOF MOUNTED DOWNBLAST FAN N.T.S.

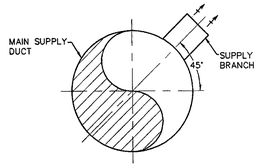

H DETAIL
THEATRE DUCT TAP N.T.S.

PASTIME THEATRE

PERFORMING ARTS CENTER
538 Main Street Coshocton, Ohio

HRJL

DRAWN BY
CHECKED BY
COMMISSION NO. 2000065
DATE JANUARY 17, 2001
REVISIONS

M5.1

OF SHEETS

© COPYRIGHT 2000

STATE OF OHIO
BRIAN BRAAKSMA
52245
REGISTERED
PROFESSIONAL ENGINEER

KORDA/NEMETH ENGINEERING, INC.
1650 WATERMARK DRIVE
COLUMBUS, OHIO 43215
DESIGNED BY MATT NICHOLS
DRAWN BY MATT NICHOLS
CHECKED BY
KNE JOB # 2000-0110

mnichols H:\Projects\2000\2000-0110 Past Time Theater\Mechanical\Drawings\00110M51.dwg DATE: JAN 17, 2001 TIME: 1:20 PM

CODED NOTES

1. 1/2" "K" COPPER TRAP PRIMER CONNECTION.
2. 3/4"CW W/BACKFLOW PREVENTER TO HUMIDIFIER BY HVAC CONTR. FINAL CONNECTION BY HVAC CONTR.
3. 3/4"GAS TO WATER HEATER W/VALVE & DIRT LEG.
4. COORDINATE PIPE LOCATION WITH DUCTWORK.
5. 3/4"CW UP TO WH-1

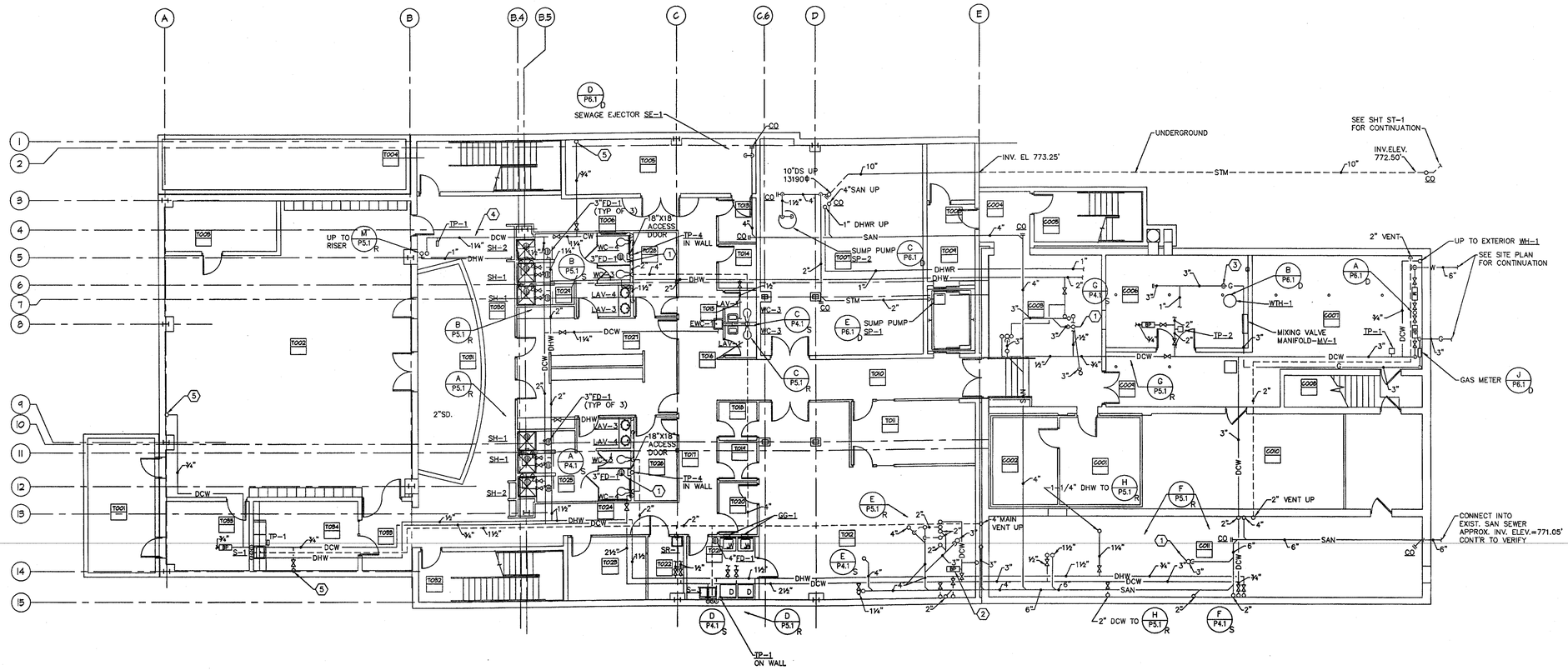

A BASEMENT FLOOR PLAN

FINISH FLOOR ELEVATION = 84'-0" 1/8"=1'-0"

KORDA/NEMETH ENGINEERING, INC.
1650 WATERMARK DRIVE
COLUMBUS, OHIO 43215
DESIGNED BY Chad Clark
DRAWN BY Yu Chen
CHECKED BY
KNE JOB # 2000-0110

BRIAN BRAAKSMA 52245 REGISTERED PROFESSIONAL ENGINEER STATE OF OHIO

PARAMOUNT TIME THEATRE

PERFORMING ARTS CENTER
538 Main Street Coshocton, Ohio

HRJL ARCHITECTS
HARDEN • REID • JAMES • LICHTENBERG
20 S. 4th ST. NEWARK OHIO 43055-5096
PHONE (740) 345-5220 FAX (740) 345-5281

DRAWN BY
CHECKED BY
COMMISION NO. 2000065
DATE JANUARY 17, 2001
REVISIONS
1 9/28/00

P2.0

OF SHEETS

© COPYRIGHT 2000
HARDEN, REID, JAMES & LICHTENBERG ARCHITECTS, INC.
THESE DOCUMENTS HAVE BEEN PREPARED EXPRESSLY FOR THE OWNER INDICATED AND ARE NOT SUITABLE FOR REUSE ON OTHER PROJECTS OR AT OTHER LOCATIONS WITHOUT THE EXPRESSED APPROVAL AND PARTICIPATION OF THE ARCHITECTS. REPRODUCTION IS PROHIBITED.

YCHEN H:\Projects\2000\2000-0110 Post Time Theater\Mechanical\Drawings\00110P20.dwg DATE: JAN 17, 2001 TIME: 8:55 AM

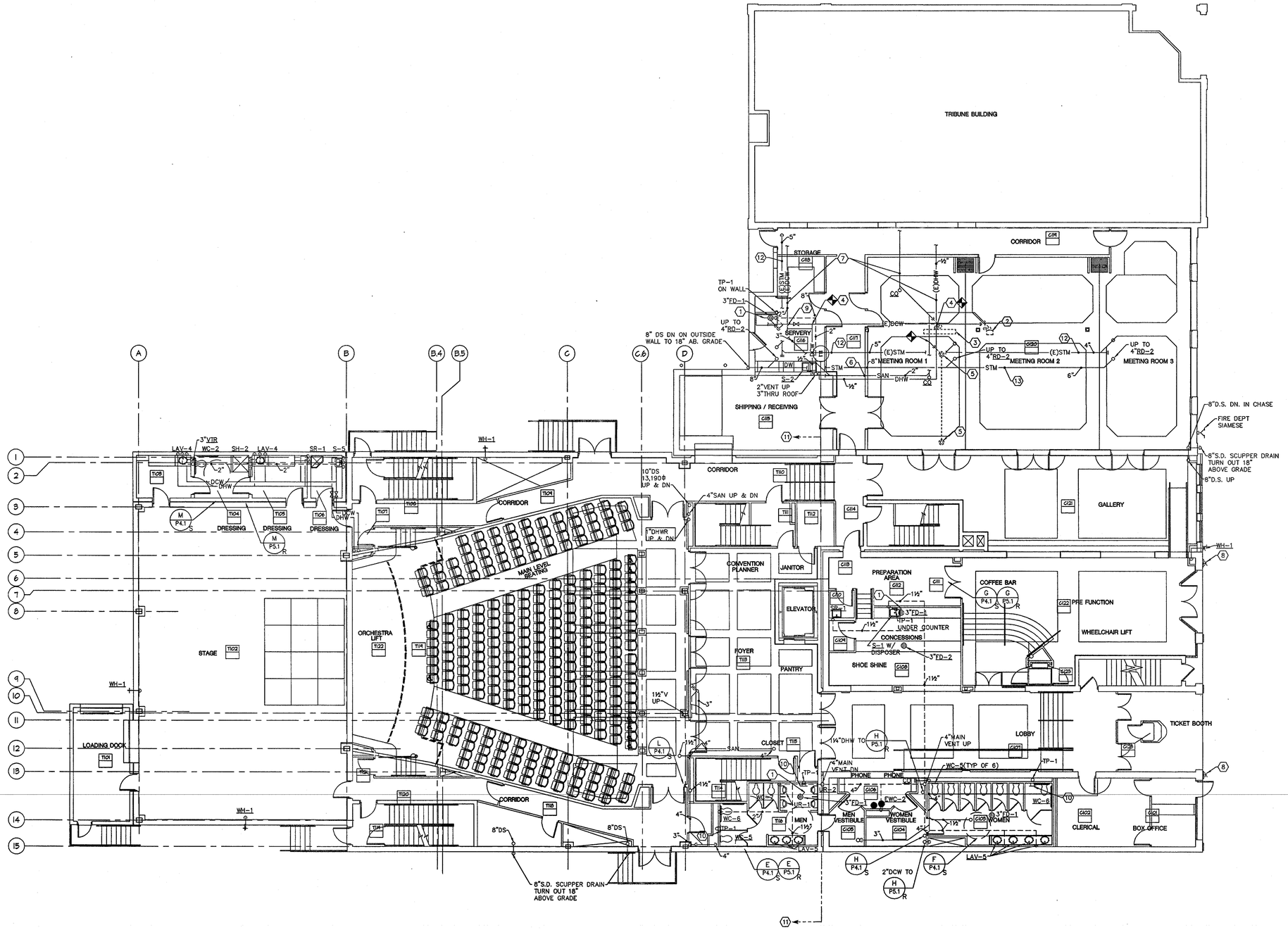

A FIRST FLOOR PLAN

FINISH FLOOR ELEVATION = 100'-0" 1/8"=1'-0"

CODED NOTES

1. 1/2" "K" SOFT COPPER TRAP PRIMER CONNECTION.
2. REMOVE EXISTING ELECTRIC WATER COOLER AND PIPING, CAP SANITARY WASTE, VENT AND COLD WATER PIPING IN WALL OR ABOVE CEILING.
3. REMOVE EXISTING SINK AND PIPING, CAP SANITARY WASTE, VENT, HOT AND COLD WATER PIPING IN WALL OR ABOVE CEILING.
4. CONNECT INTO EXISTING HOT & COLD WATER PIPING AND EXTEND 1/2" HOT & COLD WATER TO THE NEW SINK S-2 AND THE DISHWASHER.
5. REMOVE EXISTING FLOOR DRAIN & CAP LINE.
6. NEW 3" SANITARY LINE UNDER FLOOR, SAWCUT & PATCH FLOOR AS REQUIRED.
7. EXISTING PIPING TO REMAIN.
8. REMOVE EXISTING HOSE BIBB & PATCH WALL.
9. 1/2" COLD WATER TO ICE MACHINE & TRAP PRIMER.
10. 18" X 18" ACCESS DOOR.
11. ALL SANITARY WASTE, VENT AND STORM IN THE THEATRE ARE TO BE CAST IRON PIPING.
12. EXISTING STORM LINES TO BE REPLACED, EXISTING ROOF DRAINS TO REMAIN HOLD AS HIGH AS POSSIBLE TO UNDERSIDE OF STRUCTURE, COORDINATE WITH SHEET METAL.
13. HOLD AS TIGHT AS POSSIBLE TO UNDERSIDE OF STRUCTURE.

PAST TIME THEATRE

PERFORMING ARTS CENTER
538 Main Street Coshocton, Ohio

HRJL ARCHITECTS
HARDEN • REID • JAHNES • LUCHTENBERG
20 S. 4th ST. NEWARK OHIO 43055-5090
PHONE (740) 349-8203 FAX (740) 345-2051

DRAWN BY
CHECKED BY
COMMISSION NO. 2000065
DATE JANUARY 17, 2001
REVISIONS

P2.1

OF SHEETS

© COPYRIGHT 2000
HARDEN, REID, JAHNES & LUCHTENBERG ARCHITECTS, INC.
THESE DOCUMENTS HAVE BEEN PREPARED SPECIFICALLY FOR THE WILDS PROJECT. THEY ARE NOT SUITABLE FOR USE ON OTHER PROJECTS OR IN OTHER LOCATIONS WITHOUT THE APPROVAL AND PARTICIPATION OF THE ARCHITECT. REPRODUCTION IS PROHIBITED.

STATE OF OHIO
BRIAN BRAAKSMA
52245
REGISTERED PROFESSIONAL ENGINEER

KORDA/NEMETH ENGINEERING, INC.
1650 WATERMARK DRIVE
COLUMBUS, OHIO 43215
DESIGNED BY Chad Clark
DRAWN BY Yu Chen
CHECKED BY
KNE JOB # 2000-0110

YCHEN H:\Projects\2000\2000-0110 Past Time Theater\Mechanical\Drawings\00110P21.dwg DATE: JAN 17, 2001 TIME: 9:20 AM

CODED NOTES

1. 1/2" "K" SOFT COPPER TRAP PRIMER CONNECTION.
2. INSTALL 4" SANITARY LINE IN 6" SCH40 STEEL PIPE SLEEVE JUST BELOW EXISTING FOOTER, THRU NEW FOOTER & CONC UNDER PINNING.
3. RUN ON TOP OF FOOTER.
4. SAWCUT, REMOVE & PATCH EXIST. CONCRETE FLOOR TO INSTALL NEW UNDERGROUND SANITARY LINE.
5. COORDINATE LOCATION OF FLOOR DRAINS WITH HVAC CONT'R.

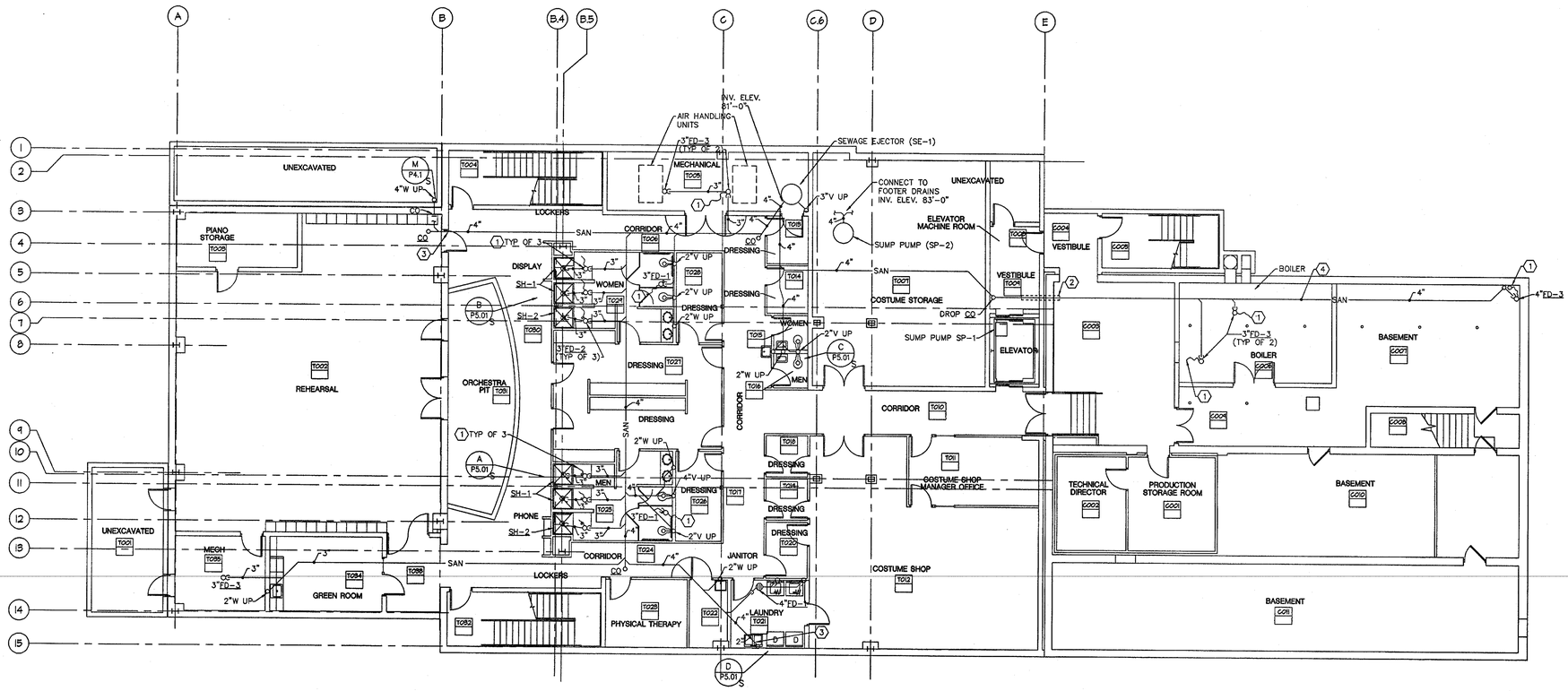

A UNDERGROUND FLOOR PLAN
FINISH FLOOR ELEVATION = 84'-0" 1/8"=1'-0"

STATE OF OHIO
BRIAN BRAAKSMA
52245
REGISTERED PROFESSIONAL ENGINEER

KORDA/NEMETH ENGINEERING, INC.
1650 WATERMARK DRIVE
COLUMBUS, OHIO 43215
DESIGNED BY Ched Clark
DRAWN BY Yu Chen
CHECKED BY
KNE JOB # 2000-0110

PASTIME THEATRE
PERFORMING ARTS CENTER
538 Main Street Coshocton, Ohio

HRJL ARCHITECTS
HARDEN • RED • JAYNES • LUCHTENBERG
20 S. 4th ST. NEWARK OHIO 43055-5009
PHONE (740) 349-8225 FAX (740) 345-2081

DRAWN BY
CHECKED BY
COMMISSION NO. 2000065
DATE JANUARY 17, 2001
REVISIONS
1 9/28/00

P2.01

OF SHEETS

©COPYRIGHT 2000
HARDEN, RED, JAYNES & LUCHTENBERG ARCHITECTS, INC.
THESE DOCUMENTS MAY BEEN PREPARED SPECIFICALLY FOR THE TITLED PROJECT. THEY ARE NOT SUITABLE FOR USE ON OTHER PROJECTS OR IN OTHER LOCATIONS WITHOUT THE APPROVAL AND PARTICIPATION OF THE ARCHITECT. REPRODUCTION IS PROHIBITED.

RBARNHART H:\Projects\2000\2000-0110 Past Time Theater\Mechanical\Drawings\00110P201.dwg DATE: JAN 15, 2001 TIME: 10:47 AM

CODED NOTES:

1. ALL SANITARY WASTE, VENT AND STORM IN THE THEATRE ARE TO BE CAST IRON PIPING.

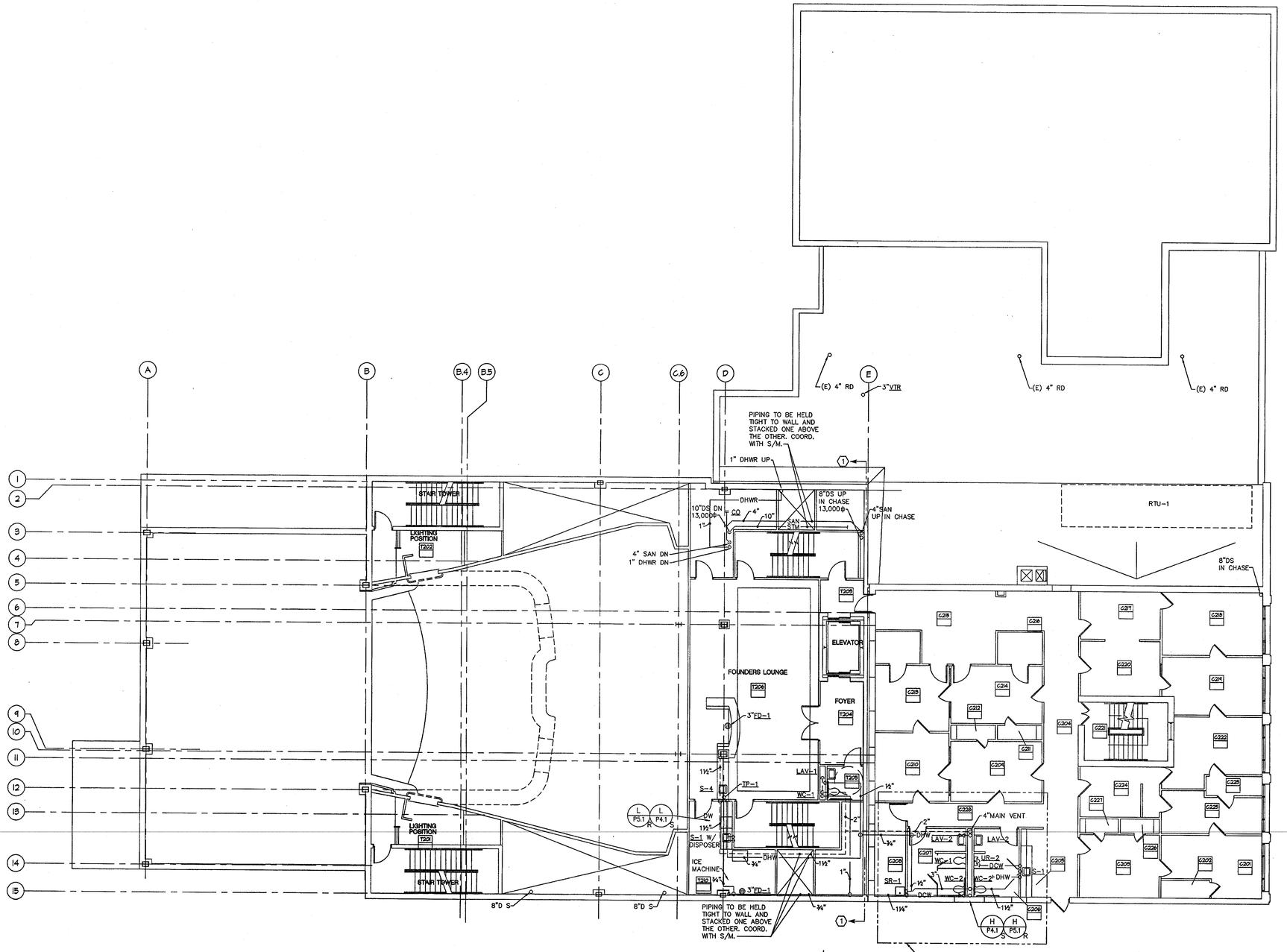

NOTE: PROVIDE ALL PIPING AND FIXTURES IN THIS AREA. COORDINATE W/ GENERAL TRADES.

A SECOND FLOOR PLAN

1/8"=1'-0"

PASTIME THEATRE

PERFORMING ARTS CENTER

538 Main Street Coshocton, Ohio

HRJL ARCHITECTS

HARDEN • REID • JAMES • LUCHTENBERG

20 S. 4th ST. NEWARK OHIO 43055-5099
PHONE (740) 349-5020 FAX (740) 345-5091

DRAWN BY

CHECKED BY

COMMISSION NO. 2000065

DATE JANUARY 17, 2001

REVISIONS

P2.2

OF SHEETS

© COPYRIGHT 2000
HARDEN, REID, JAMES & LUCHTENBERG ARCHITECTS, INC.

THESE DOCUMENTS HAVE BEEN PREPARED SPECIFICALLY FOR THIS SINGLE PROJECT. THEY ARE NOT SUITABLE FOR USE ON OTHER PROJECTS OR IN OTHER LOCATIONS WITHOUT THE APPROVAL AND PARTICIPATION OF THE ARCHITECT. REPRODUCTION IS PROHIBITED.

STATE OF OHIO
BRIAN BRAAKSMA
52245
REGISTERED
PROFESSIONAL ENGINEER

KORDA/NEMETH ENGINEERING, INC.
1650 WATERMARK DRIVE
COLUMBUS, OHIO 43215

DESIGNED BY Ched Clark
DRAWN BY Yu Chen
CHECKED BY
KNE JOB # 2000-0110

YCHEN H:\Projects\2000\2000-0110 Past Time Theater\Mechanical\Drawings\00110P22.dwg DATE: JAN 17, 2001 TIME: 9:24 AM

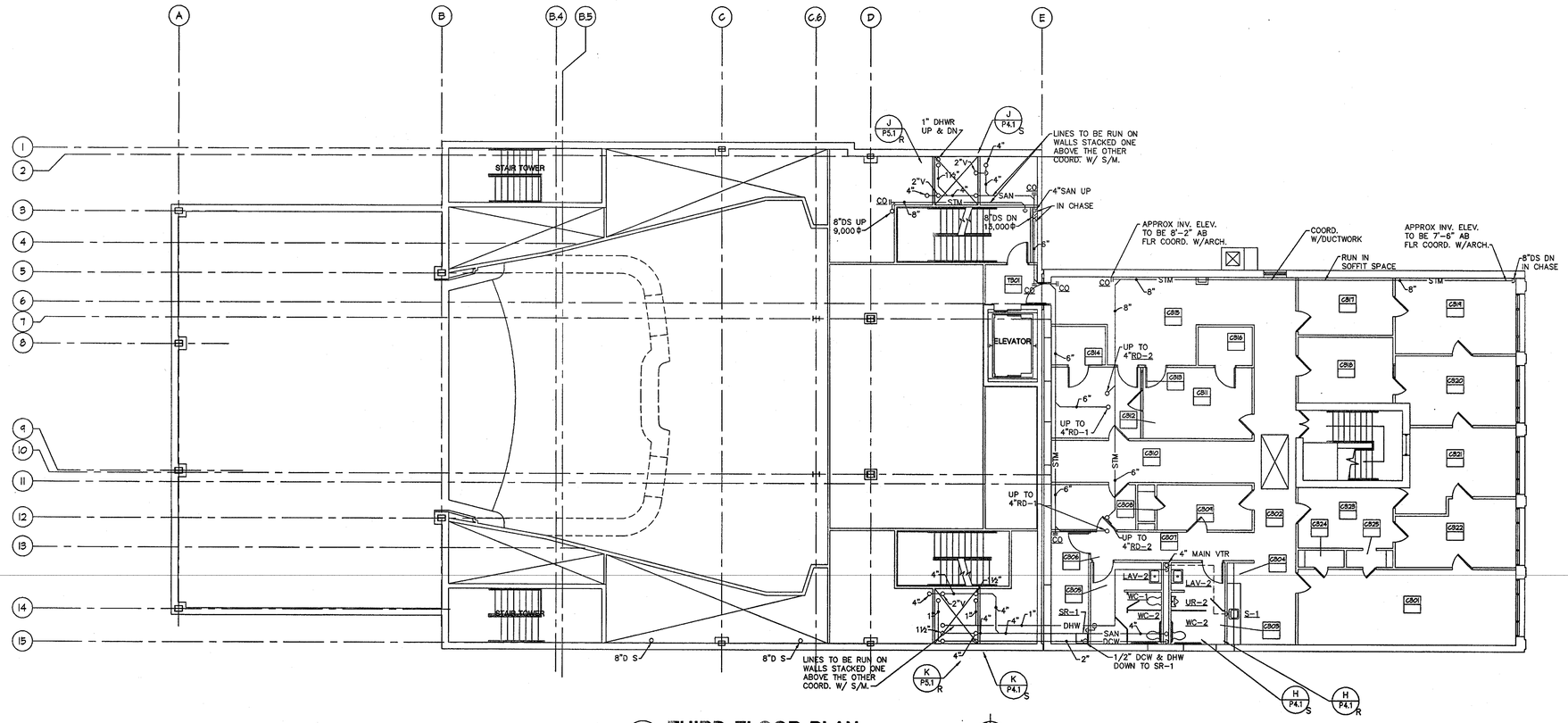

A THIRD FLOOR PLAN

1/8"=1'-0"

N

PASTIME THEATRE

PERFORMING ARTS CENTER

538 Main Street Coshocton, Ohio

HRJL ARCHITECTS

HARDON • REID • JANNES • LUCHTENBERG

20 S. 4th ST. NEWARK OHIO 43055-5099

PHONE (740) 349-5225 FAX (740) 345-5051

DRAWN BY

CHECKED BY

COMMISSION NO. 2000065

DATE JANUARY 17, 2001

REVISIONS

P2.3

OF SHEETS

© COPYRIGHT 2000
HARDON, REID, JANNES & LUCHTENBERG ARCHITECTS, INC.

THESE DOCUMENTS HAVE BEEN PREPARED SPECIFICALLY FOR THE TITLED PROJECT. THEY ARE NOT SUITABLE FOR USE ON OTHER PROJECTS OR IN OTHER LOCATIONS WITHOUT THE EXPRESS WRITTEN PERMISSION OF THE ARCHITECT. REPRODUCTION IS PROHIBITED.

STATE OF OHIO
BRIAN BRAAKSMA
52245
REGISTERED
PROFESSIONAL ENGINEER

KORDA/NEMETH ENGINEERING, INC.
1650 WATERMARK DRIVE
COLUMBUS, OHIO 43215

DESIGNED BY Ched Clark
DRAWN BY Yu Chen
CHECKED BY
KNE JOB # 2000-0110

YCHEN H:\Projects\2000\2000-0110 Past Time Theater\Mechanical\Drawings\00110P23.dwg DATE: JAN 17, 2001 TIME: 9:34 AM

A FOURTH FLOOR PLAN

1/8"=1'-0" N

JWHITEHEAD H:\Projects\2000\2000-0110 Past Time Theater\Mechanical\Drawings\00110P24.dwg DATE: JAN 15, 2001 TIME: 2:06 PM

STATE OF OHIO
BRIAN BRAAKSMA
52245
REGISTERED
PROFESSIONAL ENGINEER

KORDA/NEMETH ENGINEERING, INC.
1650 WATERMARK DRIVE
COLUMBUS, OHIO 43215
DESIGNED BY
Ched Clark
DRAWN BY
Yu Chen
CHECKED BY
KNE JOB # 2000-0110

PASTIME THEATRE

PERFORMING ARTS CENTER
538 Main Street Coshocton, Ohio

HRJL
ARCHITECTS
HARDEN • REID • JAHNES • LUCHTENBERG
20 S. 4th ST. NEWARK OHIO 43055-5099
PHONE (740) 349-8203 FAX (740) 345-2081

DRAWN BY
CHECKED BY
COMMISSION NO. 2000065
DATE JANUARY 17, 2001
REVISIONS

P2.4

OF SHEETS

© COPYRIGHT 2000
HARDEN, REID, JAHNES & LUCHTENBERG ARCHITECTS, INC.
THESE DOCUMENTS HAVE BEEN PREPARED SPECIFICALLY FOR THE TITLED PROJECT. THEY ARE NOT SUITABLE FOR USE ON OTHER PROJECTS OR IN OTHER LOCATIONS WITHOUT THE APPROVAL AND PARTICIPATION OF THE ARCHITECT. REPRODUCTION IS PROHIBITED.

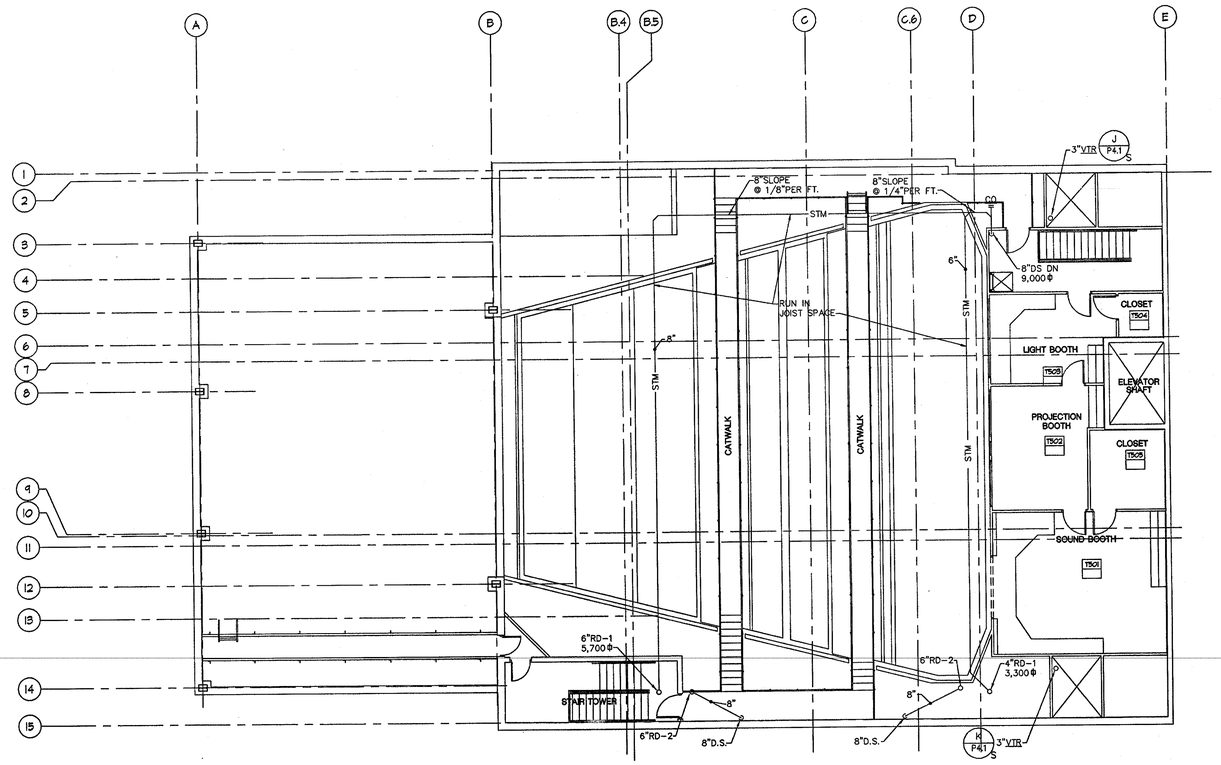

A FIFTH FLOOR PLAN

1/8"=1'-0"

N

PASTIME THEATRE

PERFORMING ARTS CENTER

538 Main Street Coshocton, Ohio

HRJL ARCHITECTS

HARDEN • REID • JANNES • LUCHTENBERG

20 S. 4th ST. NEWARK, OHIO 43055-5099

PHONE (740) 349-6200 FAX (740) 345-2051

DRAWN BY

CHECKED BY

COMMISSION NO. 2000065

DATE JANUARY 17, 2001

REVISIONS

P2.5

OF SHEETS

© COPYRIGHT 2000
HARDEN, REID, JANNES & LUCHTENBERG
ARCHITECTS, INC.

THESE DOCUMENTS HAVE BEEN PREPARED SPECIFICALLY FOR THE TITLED PROJECT. THEY ARE NOT SUITABLE FOR USE ON OTHER PROJECTS OR IN OTHER LOCATIONS WITHOUT THE APPROVAL AND PERMISSION OF THE ARCHITECT. REPRODUCTION IS PROHIBITED.

STATE OF OHIO
BRIAN BRAAKSMA
52245
REGISTERED PROFESSIONAL ENGINEER

KORDA/NEMETH ENGINEERING, INC.
1650 WATERMARK DRIVE
COLUMBUS, OHIO 43215

DESIGNED BY Ched Clark

DRAWN BY Yu Chen

CHECKED BY

KNE JOB # 2000-0110

JWHITEHEAD H:\Projects\2000\2000-0110 Past Time Theater\Mechanical\Drawings\00110P25.dwg DATE: JAN 15, 2001 TIME: 2:09 PM

PLUMBING SYMBOLS LIST
NOTE: ALL SYMBOLS NOT NECESSARILY USED

PIPING

Description	Symbol
WATER SERVICE	W
DOMESTIC COLD WATER	DCW
SOFT WATER	SW
DOMESTIC HOT WATER	DHW
DOMESTIC HOT WATER 140°F	(140°F)
DOMESTIC HOT WATER 180°F	(180°F)
TEMPERED WATER	TW
DOMESTIC HOT WATER RETURN	DHWR
DOMESTIC HOT WATER RETURN 140°F	(140°F R)
DOMESTIC HOT WATER RETURN 180°F	(180°F R)
RAW WATER	RW
DISTILLED WATER	DW
DEIONIZED WATER	DE
SANITARY	SAN
STORM	STM
ACID WASTE	AW
HOT WASTE	HW
INDIRECT WASTE	IND
COMBINATION SEWER	COMB
RAINWATER CONDUCTOR	RWC
EMERGENCY RAINWATER CONDUCTOR	ERWC
PUMPED DISCHARGE	PD
VENT	V
ACID VENT	AV
FUEL OIL SUPPLY	FOS
FUEL OIL RETURN	FOR
FUEL OIL VENT	FOV
WASTE OIL	WO
WASTE OIL VENT	WOV
NATURAL GAS	G
GASOLINE	GL
VAPOR RECOVERY	VR
PROPANE	P
ACETYLENE	AC
ARGON	AR
OXYGEN	O
MEDICAL AIR	A
COMPRESSED AIR	CA
VACUUM CLEANING LINE	VC
MEDICAL VACUUM	VAC
GAS EVACUATION	GE
NITROGEN	N
NITROUS OXIDE	NO
EXISTING TO REMAIN	(E)
EXISTING TO BE REMOVED	(R)
EXISTING TO BE ABANDONED	(AB)
FUTURE	
DIESEL FUEL	D
FLOW ARROW	
UNDER FLOOR PIPING	

VALVES

- BACKFLOW PREVENTER (BP)
- BALANCING/SHUT-OFF VALVE WITH GAUGE TAPPINGS
- BALL VALVE
- BUTTERFLY VALVE
- CHECK VALVE
- GAS PRESSURE REGULATOR
- GATE VALVE
- GAUGE COCK
- GLOBE VALVE
- PLUG VALVE
- PRESSURE REDUCING VALVE
- PRESSURE RELIEF VALVE
- SOLENOID VALVE
- 2-WAY CONTROL VALVE
- TEMPERATURE REGULATOR
- STRAINER

SPECIALTIES

- CAPPED PIPE
- PIPE SLEEVE
- FIRE RATED OR WATER TIGHT PIPE SLEEVE
- FLEXIBLE CONNECTION
- GAUGE
- METER (M)
- P-TRAP
- PIPE DROP
- PIPE RISE
- THERMOMETER
- THROUGH FLOOR AT LEVEL SHOWN (1)
- UNION
- VENT THROUGH ROOF (VTR)
- PLUG CLEANOUT (CO)
- FLOOR CLEANOUT (CO)
- CLEANOUT AT BASE OF STACK (CO)
- WALL HYDRANT (FREEZE PROOF)
- HOSE BIBB
- YARD HYDRANT
- SHOCK ABSORBER
- FLOOR OR AREA DRAIN
- ROOF DRAIN (RD)
- SHOWER TRIM
- NATURAL GAS DIRT LEG AND FINAL CONNECTION
- CONNECT TO EXISTING
- VALVE IN RISER/DROP

SHOCK ABSORBER SCHEDULE

ITEM	FIXTURE UNITS CONNECTED	P. D. I. SYMBOL
SA-1	1 - 11	A
SA-2	12 - 32	B
SA-3	33 - 60	C
SA-4	61 - 113	D
SA-5	114 - 154	E
SA-6	155 - 330	F

TRAP PRIMER SCHEDULE
(BASED ON PRECISION PLUMBING PRODUCTS)

ITEM	NO OF DRAINS	PRIMER MODEL	DISTRIBUTION UNIT
TP-1	1	PPPI-PRIME-RITE	NOT REQUIRED
TP-2	2	PPPI-PRIME-RITE	2 OPENING
TP-3	3	PPPI-PRIME-RITE	3 OPENING
TP-4	4	PPPI-PRIME-RITE	4 OPENING
TP-5	5	PPPI-PRIME-RITE	(1)-2 & (1)-3 OPENING
TP-6	6	PPPI-PRIME-RITE	(1)-2 & (1)-4 OPENING
TP-7	7	PPPI-PRIME-RITE	(1)-3 & (1)-4 OPENING
TP-8	8	PPPI-PRIME-RITE	(2)-4 OPENING

CLEANOUT SCHEDULE

ITEM	DESCRIPTION	MFR & MODEL	ACCESSORIES
CO	CLEANOUT CARPET	ZURN Z-1400-CM	DURA-COATED CAST IRON BODY WITH GAS AND WATERTIGHT ABS TAPERED THREAD PLUG AND ROUND SCORIATED TOP ADJUSTABLE TO FINISHED FLOOR.
CO	CLEANOUT TILE(VCT)	ZURN ZN-1400 -X-HD	DURA-COATED CAST IRON BODY WITH GAS AND WATERTIGHT ABS TAPERED THREADED PLUG AND ROUND TOP RECESSED FOR TILE ADJUSTABLE TO FINISHED FLOOR.
CO	CLEANOUT HEAVT TRAFFIC & EXTERIOR	ZURN Z-1402 -HD	NON-ADJUSTABLE FLOOR CLEANOUT WITH DURA-COATED CAST IRON BODY WITH GAS AND WATERTIGHT ABS TAPERED THREAD PLUG AND ROUND SCORIATED COVER AND FRAME.
CO	CLEANOUT TILE(TEPRAZZO)	ZURN ZN-1400 -HD-Z	(SAME AS CAPPET ABOVE)
CO	CLEANOUT WALL (CAST IRON)	ZURN Z-1446	DURA-COATED CAST IRON BODY, GAS AND WATERTIGHT ABS TAPERED THREAD PLUG AND ROUND SMOOTH STAINLESS STEEL WALL ACCESS COVER WITH SELLRING SCREW.

DRAIN SCHEDULE

ITEM	DESCRIPTION	MFG'R & MODEL	ACCESSORIES
FD-1	FLOOR DRAIN	ZURN ZN-415-P 1/2" TAP	CAST IRON BODY FLASHING COLLAR 6" DIA. TYPE "B" NICKEL BRONZE STRAINER 8" DIA. FOR 4" DRAIN SIZE, WITH TRAP PRIMER CONNECTION
FD-2	FLOOR DRAIN	ZURN ZN-415	SAME AS FD-1 EXCEPT LESS TRAP PRIMER
FD-3	FLOOR DRAIN	ZURN ZN-415-P 1/2" TAP	CAST IRON BODY & GRATE 9" DIA. FLASHING COLLAR SEDIMENT BUCKET AND 1/2" TRAP PRIMER CONNECTION
RD-1	ROOF DRAIN	ZURN ZC-100-R-C-EA	DURA-COATED CAST IRON BODY WITH FLASHING CLAMP AND GRAVEL STOP, LOW SILHOUETTE CAST IRON DOME, UNDER DECK CLAMP, ROOF SUMP RECEIVER AND ADJUSTABLE EXTENSION
RD-2	ROOF DRAIN	ZURN ZC-100-R-C-EA-WR-3	SAME AS RD-1 W/ 3" INTERNAL WATER DAM
SD	SCUPPER DRAIN	ZURN ZARB-199	BRONZE BODY

PLUMBING FIXTURE SCHEDULE

MANUFACTURERS AS INDICATED SERVE AS BASIS OF DESIGN. FOR ADDITIONAL ACCEPTABLE MANUFACTURERS, REFER TO SPECIFICATIONS.

(A) AMERICAN STANDARD (B) OASIS (C) HAWS (D) LEONARD (E) ELKAY (F) ZURN (G) MCGUIRE (H) FIAT (J) CHICAGO (K) GUY GRAY (L) XXX (M) XXX (N) XXX (P) XXX (Q) XXX

(1) WALL MOUNTED (2) FLOOR MOUNTED (3) FULLY RECESSED (4) SEMI-RECESSED (5) COUNTERTOP (6) VITREOUS CHINA (7) STAINLESS STEEL (8) STEEL (9) FIBERGLASS (10) PRECAST TERRAZO (11) MOLDED STONE (12) BRASS (13) CAST IRON (14) WHITE (15) CHROME PLATED (16) AS PER MFR. STANDARD (17) AS INDICATED ● PROVIDE PER SPECIFICATIONS

TAG	DESCRIPTION	PIPE CONNECTIONS				MFR.	MODEL NUMBER	MOUNTING TYPE	FITTINGS & TRIM								REMARKS
		SAN	VENT	DCW	DHW				MFR.	FLUSH VALVE, FAUCET or MIXING VALVE	MFR.	SUPPLY STOPS	MFR.	STRAINER	MFR.	P-TRAP	
WC-1	WATER CLOSET	4"	2"	1"	–	A	2257.103	WALL	F	Z-6000-XL-WS-I	–	INTERGAL	–	–	–	INTERGAL	SEAT OLSONITE 95 S.S. HINGE CARRIER ZURN Z-1200 SERIES
WC-2	WATER CLOSET	4"	2"	1"	–	A	2257.103	WALL	F	Z-6000-XL-WS-I	–	INTERGAL	–	–	–	INTERGAL	HANDICAPPED SEAT OLSONITE 95 S.S. HINGE CARRIER ZURN Z-1200 SERIES
WC-3	WATER CLOSET	4"	2"	1"	–	A	2234.015	FLOOR	F	Z-6000-XL-WS-I	–	INTERGAL	–	–	–	INTERGAL	SEAT OLSONITE 95 S.S. HINGE
WC-4	WATER CLOSET	4"	2"	1"	–	A	3043.102	FLOOR	F	Z-6000-XL-WS-I	–	INTERGAL	–	–	–	INTERGAL	HANDICAPPED
WC-5	WATER CLOSET	4"	2"	1"	–	A	2257.103	WALL	F	Z-6000-ES-S	–	INTERGAL	–	–	–	INTERGAL	SEAT OLSONITE 95 S.S. HINGE CARRIER ZURN Z-1200 SERIES ELECTRIC FLUSH VALVE
WC-6	WATER CLOSET	4"	2"	1"	–	A	2257.103	WALL	F	Z-6000-ES-S	–	INTERGAL	–	–	–	INTERGAL	HANDICAPPED SEAT OLSONITE 95 S.S. HINGE CARRIER ZURN Z-1200 SERIES ELECTRIC FLUSH VALVE
WC-7	WATER CLOSET	4"	2"	1"	–	A	2234.015	FLOOR	F	Z-6000-ES-S	–	INTERGAL	–	–	–	INTERGAL	SEAT OLSONITE 95 S.S. HINGE ELECTRONIC FLUSH VALVE
UR-1	URINAL	2"	1½"	¾"		A	6501.010	WALL	F	Z-60003XL-WS-1	–	INTERGAL	–	–	–	INTERGAL	CARRIER ZURN 1200 SERIES W/BEARING PLATE
UR-2	URINAL	2"	1½"	¾"		A	6501.010	WALL	F	Z-60003XL-WS-I	–	INTERGAL	–	–	–	INTERGAL	HANDICAPPED CARRIER Z-1200 SERIES W/ANCHOR PLATE
LAV-1	LAVATORY	1½"	1½"	½"	½"	A	0355.012	WALL	A	2385.006	G	158WC	G	155WC	G	8902	HANDICAPPED CARRIER ZURN 1231 W/ANCHOR PLATE
LAV-2	LAVATORY	1½"	1½"	½"	½"	A	0355.012	WALL	A	2385.006	G	158WC	G	155WC	G	8902	HANDICAPPED CARRIER ZURN 1231 W/ANCHOR PLATE
LAV-3	LAVATORY	1½"	1½"	½"	½"	A	0476.028	COUNTER	A	2385.006	G	158WC	G	155WC	G	8902	HANDICAPPED
LAV-4	LAVATORY	1½"	1½"	½"	½"	A	0476.028	COUNTER	A	2385.006	G	158WC	G	155WC	G	8902	HANDICAPPED
LAV-5	LAVATORY	½"	½"	½"	½"	A	0496.011	UNDER COUNTER	A	7471.712	G	158WC		155WC	G	8902	WITH PORCELAIN HANDLES LESS POP-UP DRAIN
LAV-6	PEDESTAL LAVATORY	1½"	1½"	½"	½"	A	0191.134	PEDESTAL	A	7471.712 8"CENTERS	G	158WC	G	155WC	G	8902	
SH-1	SHOWER	2"	–	½"	½"	D	SS-PAM-203-TS	WALL	D	INTERGAL	–	–	–	–	–	–	BASE FIAT MODEL 36 MTF
SH-2	SHOWER	2"	–	½"	½"	D	SS-PAM-5DIP	WALL	D	INTERGAL	–	–	–	–	–	–	HANDICAPPED BASE FIAT MODEL WTR 4995
EWC-1	ELECTRIC WATER COOLER	1½"	1½"	½"	–	B	P8AM	WALL	–	INTERGAL	G	165	–	–	G	8088 W/ CONTINUOUS WASTE	HANDICAPPED CARRIER ZURN 1200 SERIES W/ BEARING PLATE
EWC-2	BI-LEVEL ELECTRIC WATER COOLER	1½"	1½"	½"	–	B	MLF8CR	WALL	–	INTERGAL	G	165	–	–	G	8088 W/ CONTINUOUS WASTE	HANDICAPPED ANTIQUE BRONZE FINISH
S-1	SINGLE BOWL SINK	1½"	1½"	½"	½"	E	LR1720	COUNTER	A	4175.201	G	H165LK	E	LK-35	G	8912	FURNISH WITH DISPOSER IN ROOMS C108 & T210 ISE BADGER 5, 1/2 HP, 120 V 1ø
S-2	DOUBLE BOWL SINK	1½"	1½"	½"	½"	A	LR3322	COUNTER	A	4175.201	G	H165LK	E	LK-35	G	8912	WITH DISPOSER ISE BADGER 5, 1/2 HP, 120V 1ø
S-3	DOUBLE BOWL LAUNDRY SINK	1½"	1½"	½"	½"	H	FLTD	STAND W/LEGS	J	891 W/#369 HANDLES, SG SPOUT & E3SOFTFLO	G	2165	–	–	G	8912	
S-4	BAR SINK	1½"	1½"	½"	½"	E	LR-1720	COUNTER	A	2770.712	G	H165LK	E	LR-35	G	8912	
S-5	WALL HUNG	1½"	1½"	½"	½"	H	FL-1	WALL HUNG	J	891 W/#369 HANDLES, SG SPOUT & E3SOFTFLO	G	2165	–	–	–	Z-1180 1-1/2	WITH PLASTER TRAP
SR-1	SERVICE RECEPTOR	3"	1½"	½"	½"	H	MSB 3624	FLOOR	A	8344.111	–	–	–	–	–	–	
WH-1	WALL HYDRANT	–	–	¾"	–	F	Z-1300-11-12	WALL	–	–	–	–	–	–	–	–	
GG-1	GUY GRAY	2"	–	½"	½"	K	WBE-200	WALL	K	DUO-CLOZ	–	–	–	–	–	2 DRAIN	WITH 208V 1ø ELECTRIC OUTLET

PLUMBING EQUIPMENT SCHEDULE

TAG	DESCRIPTION	MFG'R & MODEL	ELEC. REQ.	REMARKS
WTH-1	WATER HEATER	A.O. SMITH BTH-199	120-60-1	CAPACITY: 283 GPH THRU 100°F/HR. TANK SIZE 100 GAL NAT GAS INPUT 199,000 BTU/HR HANDHOLE CLEANOUT, T&P RELIEF VALVE
RCP-1	RECIRCULATING PUMP	BELL & GOSSETT PL30	1/12 HP 120V 60 CYC 1 PH	INLINE MOUNTED WITH 1" FLANGE 14 GPM AT 15 FT. HD. TO RUN CONTINUOUS TO BE PART OF MIXING VALVE PACKAGE
ET-1	EXPANSION TANK	AMATROL ST-25-V	–	VOLUME = 10.3 GAL. 15-3/8"DIA. X 19-1/4"HIGH 1" NPTF CONNECTION.
SP-1	SUMP PUMP	ZOELLER M-53	0.3 HP 120V 60 CYC 1 PH	CAPACITY: 10 GPM AT 15 FT. HD. INTEGRAL FLOAT, CORD AND PLUG. 1-1/2" PIPING WITH CHECK AND SHUT-OFF VALVE. CONNECT TO ELEC. PROVIDED BY DIV 16.
SP-2	SUMP PUMP (DUPLEX)	ZOELLER N6292 3"DISCH.	1/2 HP 120V 60 CYC 1 PH	CAPACITY: 40 GPM AT 25 FT. HD. FIBERGLASS BASIN 36" DIA. X 72" DEEP
SE-1	SEWAGE EJECTOR (DUPLEX)	ZOELLER N6292 3"DISCH.	1/2 HP 120V 60 CYC 1 PH	CAPACITY: 40 GPM AT 25 FT. HD. FIBERGLASS BASIN 36" DIA. X 72" DEEP
MV-1	MIXING VALVE	LEONARD MEGATRON MODEL #2-ARV	–	UNIT TO BE FACTORY ASSEMBLED AND SHIPPED AS ONE UNIT INCLUDING RECIRCULATING PUMP

STATE OF OHIO – BRIAN BRAAKSMA 52245 – REGISTERED PROFESSIONAL ENGINEER

KORDA/NEMETH ENGINEERING, INC.
1650 WATERMARK DRIVE
COLUMBUS, OHIO 43215
DESIGNED BY Ched Clark
DRAWN BY Ron Barnhart
CHECKED BY.
KNE JOB # 2000-0110

PASTIME THEATRE
PERFORMING ARTS CENTER
538 Main Street Coshocton, Ohio

HRJL ARCHITECTS
HARDEN • REID • JAHNES • LUCHTENBERG
20 S. 4th ST. NEWARK OHIO 43055-5099
PHONE (740) 349-8203 FAX (740) 345-2061

DRAWN BY
CHECKED BY
COMMISSION NO. 2000065
DATE JANUARY 17, 2001
REVISIONS

P3.1

OF SHEETS

© COPYRIGHT 2000 HARDEN, REID, JAHNES & LUCHTENBERG ARCHITECTS, INC.
THESE DOCUMENTS HAVE BEEN PREPARED SPECIFICALLY FOR THE TITLED PROJECT. THEY ARE NOT SUITABLE FOR USE ON OTHER PROJECTS OR IN OTHER LOCATIONS WITHOUT THE APPROVAL AND PARTICIPATION OF THE ARCHITECT. REPRODUCTION IS PROHIBITED.

YCHEN H:\Projects\2000\2000-0110 Past Time Theater\Mechanical\Drawings\00110P31.dwg DATE: JAN 17, 2001 TIME: 9:38 AM

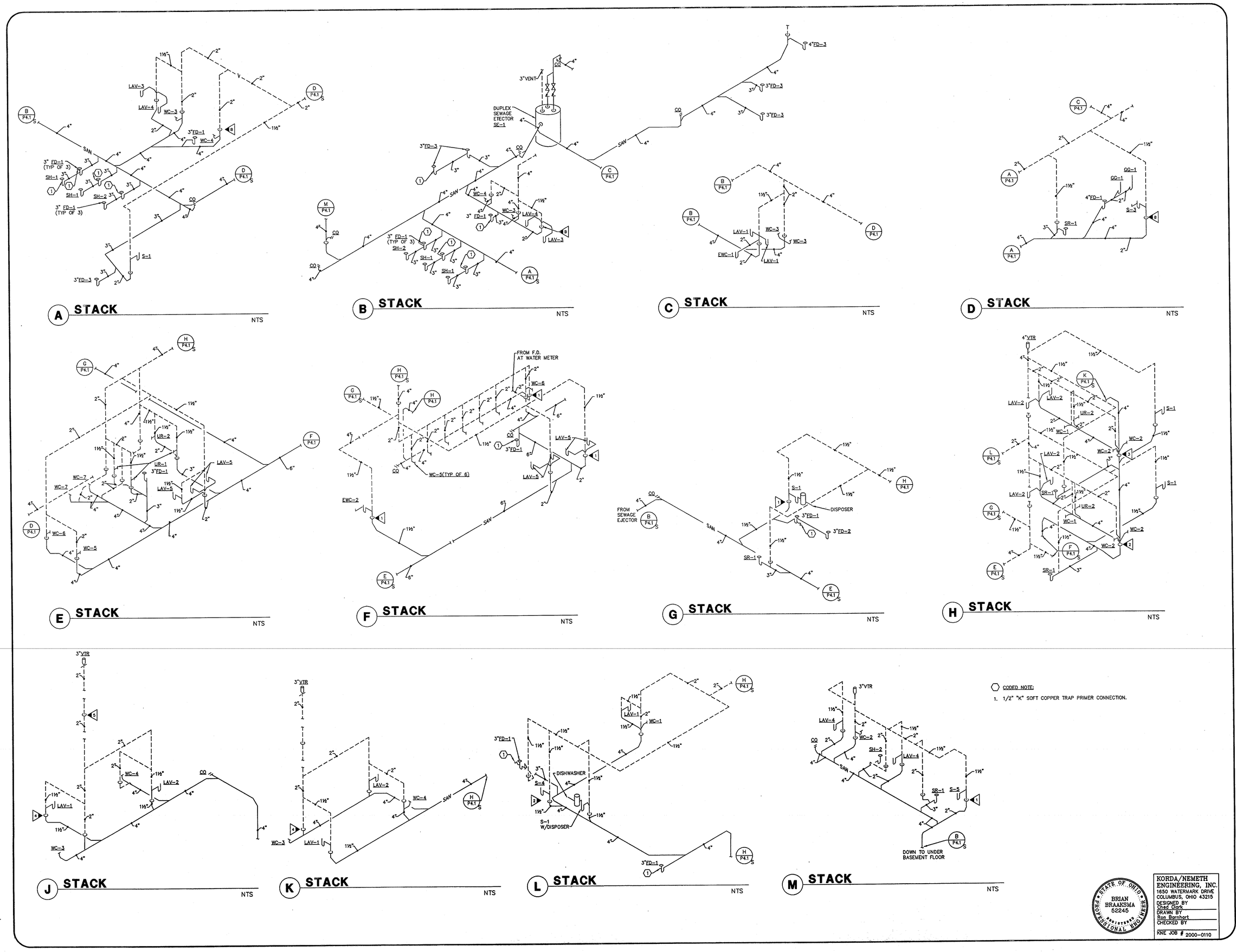

CODED NOTE:

1. 1/2" "K" SOFT COPPER TRAP PRIMER CONNECTION.

STATE OF OHIO
BRIAN BRAAKSMA
52245
REGISTERED
PROFESSIONAL ENGINEER

KORDA/NEMETH ENGINEERING, INC.
1650 WATERMARK DRIVE
COLUMBUS, OHIO 43215
DESIGNED BY Ched Clark
DRAWN BY Ron Barnhart
CHECKED BY
KNE JOB # 2000-0110

PASTIME THEATRE

PERFORMING ARTS CENTER
538 Main Street Coshocton, Ohio

HRJL ARCHITECTS
HARDEN • RED • JAMES • LICHTENBERG
20 S. 4th ST. NEWARK OHIO 43055-5099
PHONE (740) 349-6203 FAX (740) 349-2081

DRAWN BY
CHECKED BY
COMMISSION NO. 2000065
DATE JANUARY 17, 2001
REVISIONS

P4.1

OF SHEETS

© COPYRIGHT 2000
HARDEN, RED, JAMES & LICHTENBERG ARCHITECTS, INC.
THESE DOCUMENTS HAVE BEEN PREPARED SPECIFICALLY FOR THE SITE PROJECT. THEY ARE NOT SUITABLE FOR USE ON OTHER PROJECTS OR IN LOCATIONS WITHOUT THE OFFICIAL AND PARTICIPATION OF THE ARCHITECT. REPRODUCTION IS PROHIBITED.

YCHEN H:\Projects\2000\2000-0110 Past Time Theater\Mechanical\Drawings\00110P41.dwg DATE: JAN 17, 2001 TIME: 9:41 AM

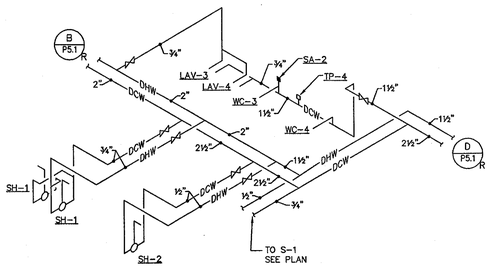

A RISER NTS

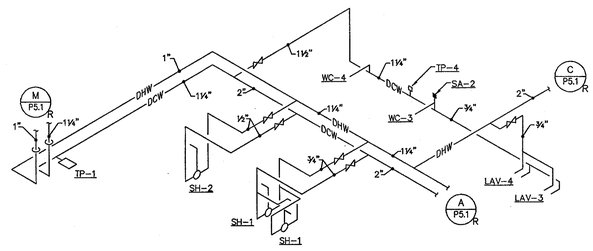

B RISER NTS

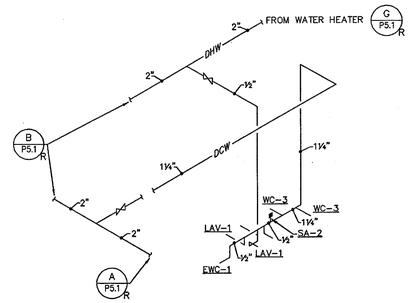

C RISER NTS

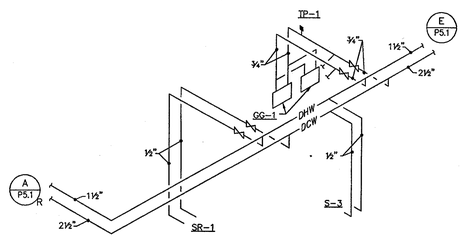

D RISER NTS

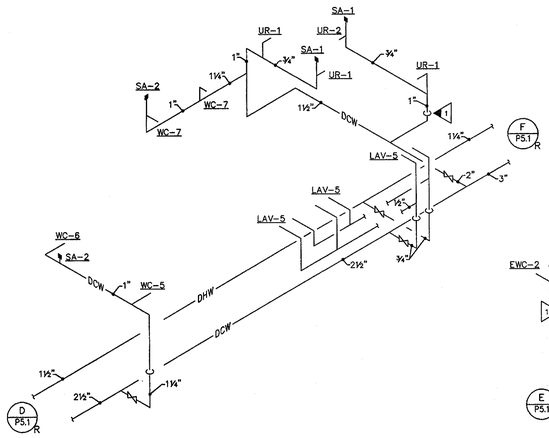

E RISER NTS

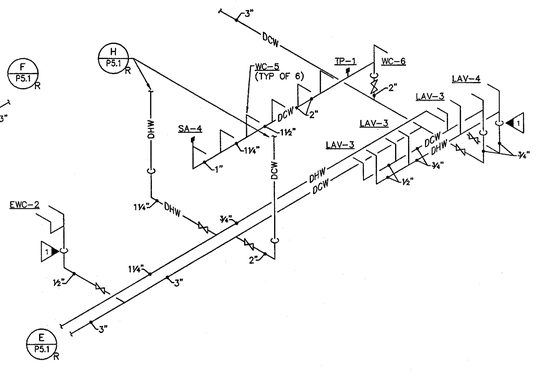

F RISER NTS

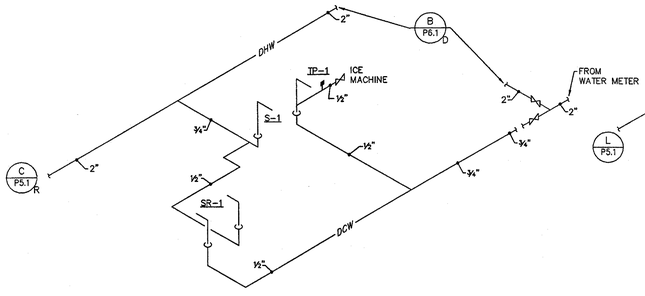

G RISER NTS

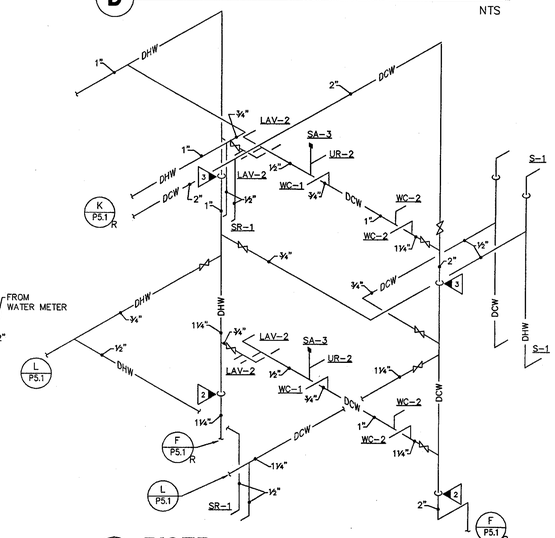

H RISER NTS

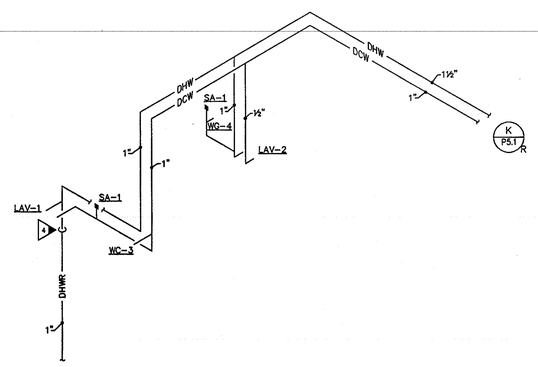

J RISER NTS

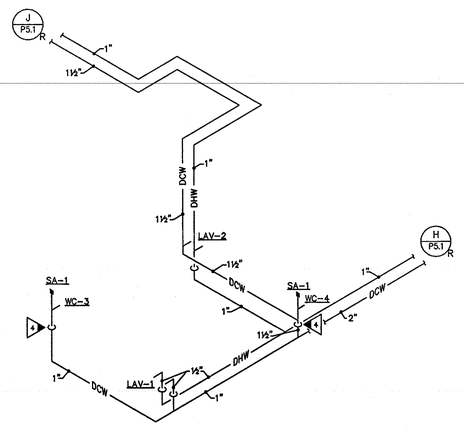

K RISER NTS

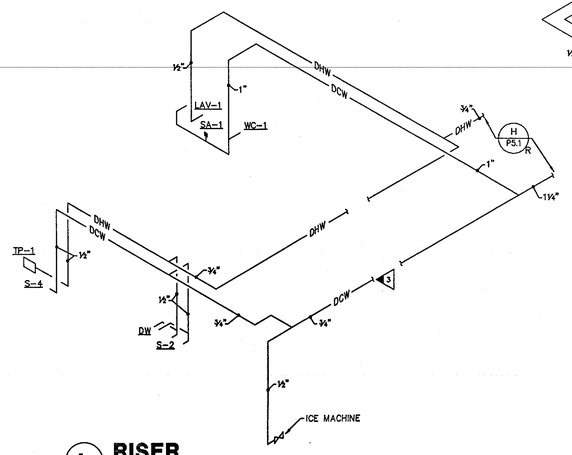

L RISER NTS

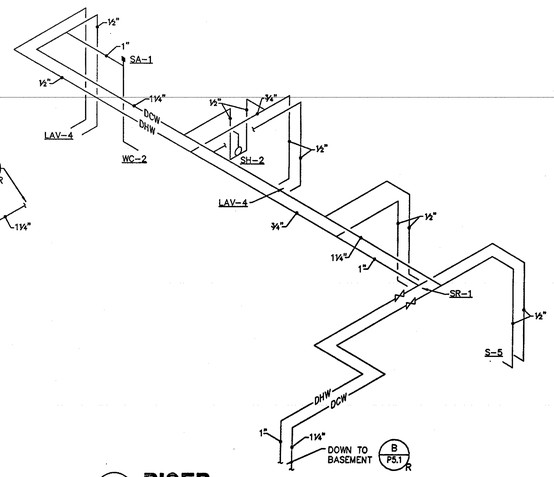

M RISER NTS

STATE OF OHIO
BRIAN BRAAKSMA
52245
REGISTERED PROFESSIONAL ENGINEER

KORDA/NEMETH ENGINEERING, INC.
1650 WATERMARK DRIVE
COLUMBUS, OHIO 43215
DESIGNED BY Chad Clark
DRAWN BY John Van Ausdal
CHECKED BY
KNE JOB # 2000-0110

PASTIME THEATRE

PERFORMING ARTS CENTER
538 Main Street Coshocton, Ohio

HRJL ARCHITECTS
HARDEN • REID • JANNES • LUCHTENBERG
20 S. 4th ST. NEWARK OHIO 43055-5099
PHONE (740) 349-8203 FAX (740) 345-0291

DRAWN BY
CHECKED BY
COMMISSION NO. 2000065
DATE JANUARY 17, 2001
REVISIONS

P5.1

OF SHEETS

© COPYRIGHT 2000
HARDEN, REID, JANNES & LUCHTENBERG ARCHITECTS, INC.
THESE DOCUMENTS HAVE BEEN PREPARED SPECIFICALLY FOR THE TITLED PROJECT. THEY ARE NOT SUITABLE FOR USE ON OTHER PROJECTS OR IN OTHER LOCATIONS WITHOUT THE APPROVAL AND PARTICIPATION OF THE ARCHITECT. REPRODUCTION IS PROHIBITED.

JWHITEHEAD H:\Projects\2000\2000-0110 Past Time Theater\Mechanical\Drawings\00110P51.dwg DATE: JAN 15, 2001 TIME: 3:20 PM

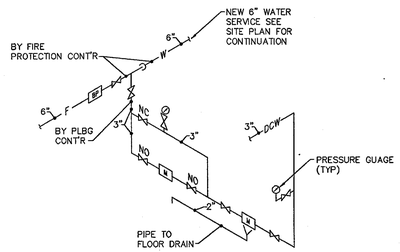

A DETAIL
WATER METER DETAIL — NTS

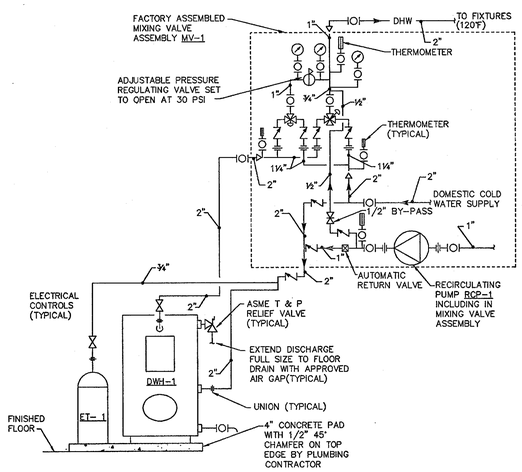

B DETAIL
WATER HEATER PIPING — NTS

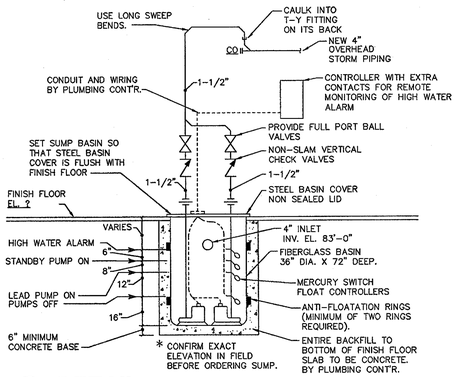

C DETAIL
GROUNDWATER SUMP PUMP PIPING (SP-2) — NTS

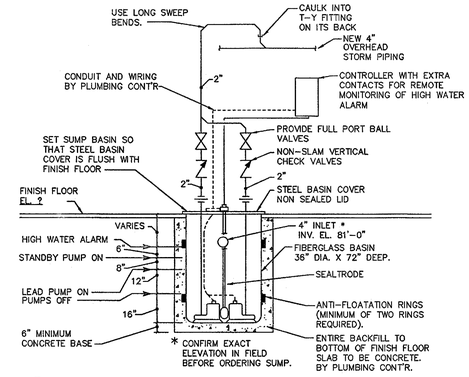

D DETAIL
SEWAGE EJECTOR PIPING (SE-1) — NTS

E DETAIL
ELEVATOR SUMP PUMP (SP-1) — NTS

F DETAIL
NTS

G DETAIL
NTS

H DETAIL
NTS

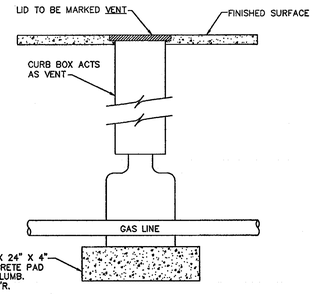

I DETAIL
NTS

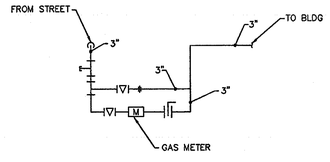

J DETAIL
NTS

mdolbeare H:\Projects\2000\2000-0110 Past Time Theater\Mechanical\Drawings\00110P61.dwg DATE: JAN 04, 2001 TIME: 4:38 PM

PAST TIME THEATRE
PERFORMING ARTS CENTER
538 Main Street Coshocton, Ohio

HRJL ARCHITECTS
HARDEN • REID • JENNES • LUCHTENBERG
59 S. 4th ST. NEWARK OHIO 43055-5599
PHONE (740) 345-5255 FAX (740) 345-2001

DRAWN BY
CHECKED BY
COMMISSION NO. 2000065
DATE JANUARY 11, 2001
REVISIONS

P6.1
OF SHEETS

© COPYRIGHT 2000
HARDEN, REID, JENNES & LUCHTENBERG ARCHITECTS, INC.
THESE DOCUMENTS HAVE BEEN PREPARED SPECIFICALLY FOR THIS TITLED PROJECT. THEY ARE NOT SUITABLE FOR USE ON OTHER PROJECTS BY ANY OTHER LOCATIONS WITHOUT THE APPROVAL AND PARTICIPATION OF THE ARCHITECTS. REPRODUCTION IS PROHIBITED.

KORDA/NEMETH ENGINEERING, INC.
1650 WATERMARK DRIVE
COLUMBUS, OHIO 43215
DESIGNED BY Chad Clark
DRAWN BY Ron Barnhart
CHECKED BY
KNE JOB # 2000-0110

STATE OF OHIO — BRIAN BRAAKSMA 52245 — REGISTERED PROFESSIONAL ENGINEER

GENERAL NOTES

1. CONNECT ALL NIGHT LIGHTING, EMERGENCY, EXIT AND EMERGENCY EGRESS LIGHTING TO LOCAL BRANCH LIGHTING CIRCUIT, AHEAD OF LOCAL LIGHTING CONTROLS.
2. REFER TO E4.XX SERIES DRAWINGS FOR ADDITIONAL LIGHTING/CONTROL REQUIREMENTS.

CODED NOTES

1. MOUNT FIXTURE TIGHT TO UNDERSIDE OF STRUCTURAL STEEL, MAINTAINING CLEARANCE REQUIRED FOR REMOVABLE TRAP DOORS.
2. REFER TO DETAIL B/E7.1 FOR MOUNTING AND COORDINATION (TYPICAL). EXTEND BRANCH CIRCUIT THROUGH LIGHTING CONTACTOR.
3. PROVIDE CONTACTOR ABOVE CEILING FOR CONTROL OF DRESSING ROOM MIRROR LIGHT FIXTURES. CONTACTOR TO BE CONTROLLED BY 3 POSITION MOMENTARY CONTACT SWITCH LOCATED ADJACENT TO DOOR. CONNECT CONTROL CIRCUIT TO LBB-30 WITH DRESSING ROOM LIGHTING.
4. CONNECT ALL LIGHTING IN THIS STAIRWELL TO TURN "ON" WHEN ANY ONE OCCUPANCY SENSOR IN THIS STAIRWELL IS ACTIVATED. ALL LIGHTING IN THIS STAIRWELL SHALL BE ON A COMMON BRANCH CIRCUIT AS SHOWN ON THIS SHEET.

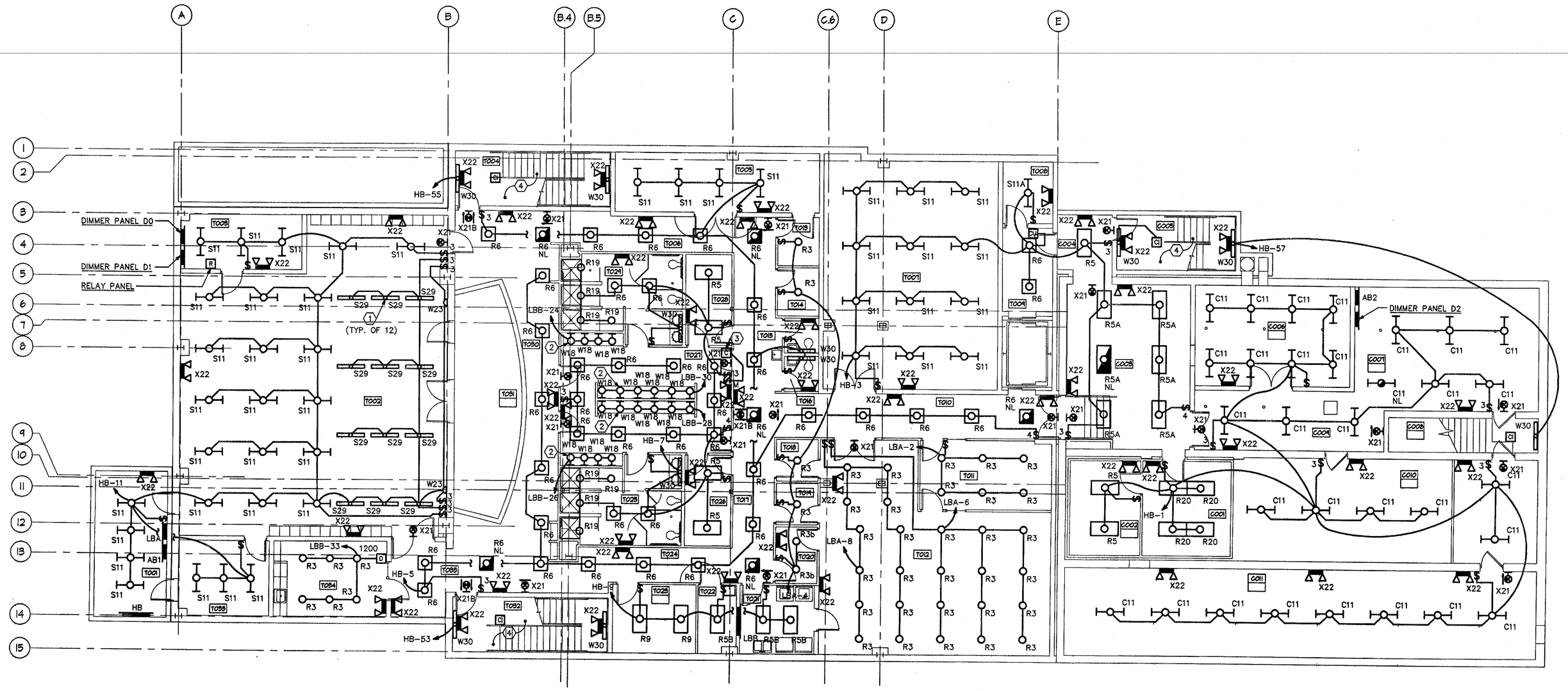

A BASEMENT FLOOR PLAN
1/8"=1'-0"

PASTIME THEATRE

PERFORMING ARTS CENTER
538 Main Street Coshocton, Ohio

HRJL

DRAWN BY
CHECKED BY
COMMISSION NO. 2000068
DATE JANUARY 17, 2001
REVISIONS

E2.0

OF SHEETS

© COPYRIGHT 2000

STATE OF OHIO
GERALD A. PETRIC
E-40996
REGISTERED
PROFESSIONAL ENGINEER

KORDA/NEMETH ENGINEERING, INC.
1650 WATERMARK DRIVE
COLUMBUS, OHIO 43215
DESIGNED BY Robert F. Gardner
DRAWN BY Tara K. Theado
CHECKED BY
KNE JOB # 2000-011D

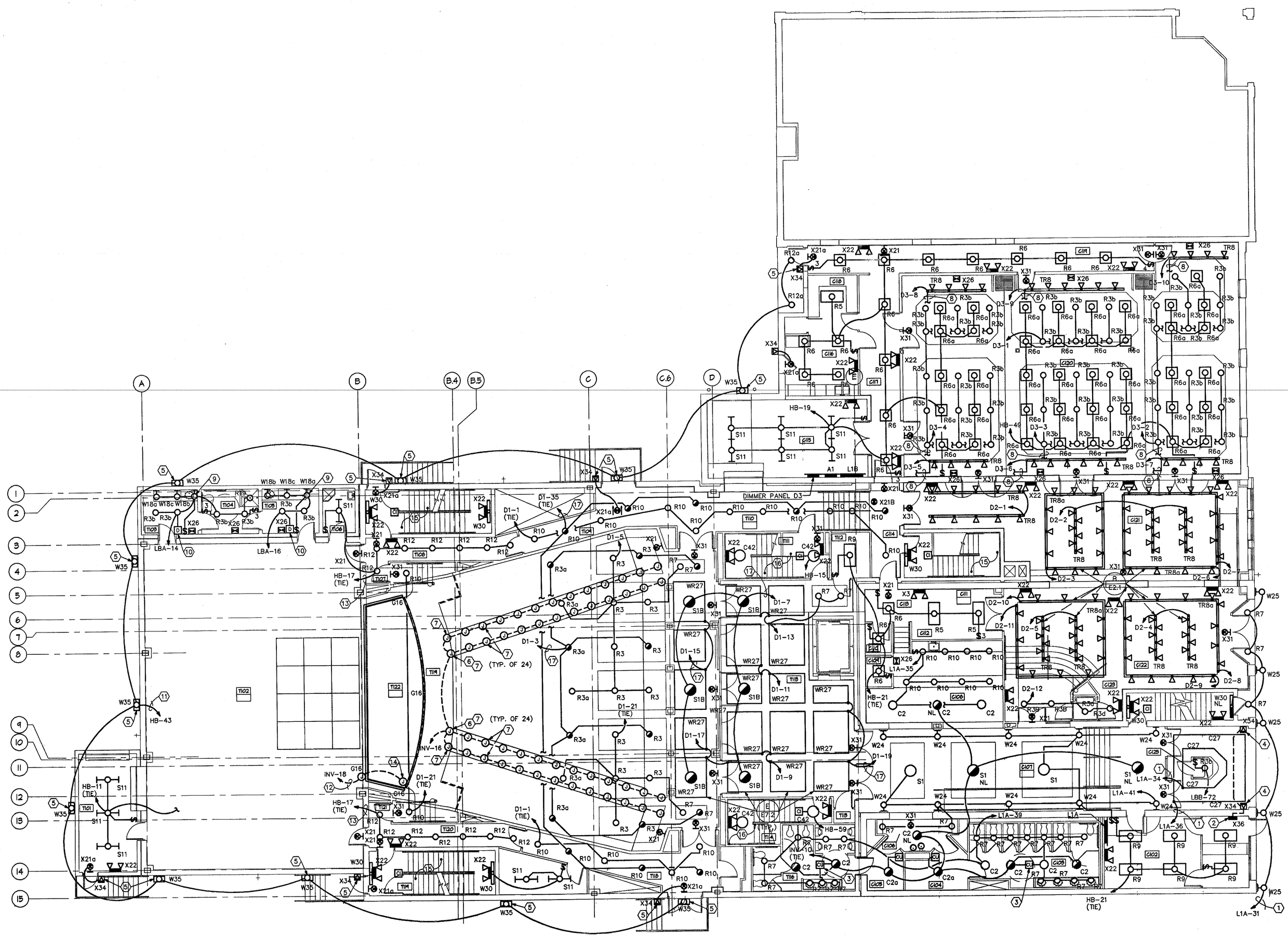

A FIRST FLOOR PLAN

1/8"=1'-0"

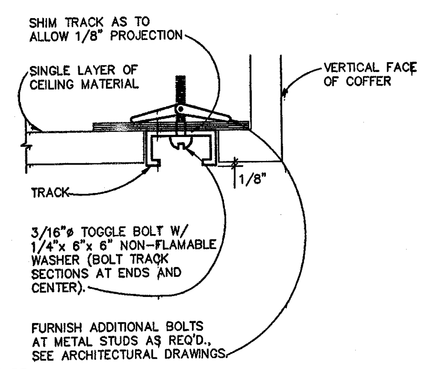

B DETAIL

RECESSED TRACK MOUNTING

N.T.S.

GENERAL NOTES

1. UNLESS NOTED OTHERWISE, ALL NIGHT LIGHTING, EMERGENCY, EXIT AND EMERGENCY EGRESS LIGHTING SHALL BE CONNECTED TO LOCAL BRANCH LIGHTING CIRCUIT, AHEAD OF LOCAL LIGHTING CONTROLS.
2. REFER TO E4.XX SERIES DRAWINGS FOR ADDITIONAL LIGHTING/CONTROL REQUIREMENTS.

CODED NOTES

1. EXTEND CIRCUIT THROUGH LIGHTING CONTACTOR LC-1. REFER TO DETAIL G/E7.1.
2. LOCATE EMERGENCY BATTERY PACK ABOVE ACCESSIBLE CEILING.
3. OCCUPANCY SENSOR TO CONTROL LIGHT FIXTURE ON EMERGENCY POWER. PROVIDE RELAY LOCATED ABOVE CEILING TO CONTROL NORMAL LIGHTING. WIRE RELAY IN PARALLEL WITH LIGHT FIXTURES ON EMERGENCY POWER.
4. FLUSH MOUNT DEVICE IN CEILING.
5. DEVICE MOUNTED ON FLUSH JUNCTION BOX. JUNCTION BOX PROVIDED UNDER SHELL PACKAGE CONTRACT.
6. LOW VOLTAGE TRANSFORMER FOR AISLE LIGHTING FIXTURES INSTALLED IN CEILING SPACE OF THE FLOOR BELOW.
7. JUNCTION BOX (FOR AISLE LIGHTING FIXTURE PROVIDED BY OTHERS). VERIFY EXACT LOCATION WITH MANUFACTURER PRIOR TO ROUGH-IN. JUNCTION BOX, FINAL CONNECTION, AND ALL WIRING BY THIS CONTRACTOR.
8. EXTEND BRANCH CIRCUIT THROUGH LOCAL DIMMER/LIGHTING CONTROL. REFER TO E4.XX SERIES DRAWINGS.
9. REFER TO DETAIL A/E7.1 FOR MOUNTING AND COORDINATION (TYPICAL).
10. 600 WATT DIMMER.
11. EXTEND CIRCUIT THROUGH LIGHTING CONTACTOR LC-2. REFER TO DETAIL G/E7.1.
12. TRANSFORMER FOR FIXTURE TO BE LOCATED IN THE CEILING SPACE OF THE FLOOR BELOW.
13. EXTEND BRANCH CIRCUIT THROUGH RELAY PANEL.
14. JUNCTION BOX AND G16 FIXTURE INSTALLED ON ORCHESTRA LIFT. COORDINATE EXACT REQUIREMENTS WITH ORCHESTRA LIFT MANUFACTURER IN FIELD, PRIOR TO ROUGH-IN.
15. CONNECT ALL LIGHTING IN THIS STAIRWELL TO TURN "ON" WHEN ANY ONE OCCUPANCY SENSOR IN THIS STAIRWELL IS ACTIVATED. ALL LIGHTING IN THIS STAIRWELL SHALL BE ON A COMMON BRANCH CIRCUIT AS SHOWN ON SHEET E2.0.
16. CONNECT ALL LIGHTING IN THIS STAIRWELL TO TURN "ON" WHEN ANY ONE OCCUPANCY SENSOR IN THIS STAIRWELL IS ACTIVATED. ALL LIGHTING IN THIS STAIRWELL SHALL BE ON A COMMON BRANCH CIRCUIT AS SHOWN ON THIS SHEET.
17. EXTEND CIRCUIT TO DIMMER THROUGH BRANCH CIRCUIT AUTOMATIC TRANSFER PANEL. REFER TO BRANCH CIRCUIT TRANSFER PANEL SCHEDULE ON SHEET E5.3.

PASTIME THEATRE

PERFORMING ARTS CENTER

538 Main Street Coshocton, Ohio

HRJL ARCHITECTS

HARDEN • REID • JANES • LICHTENBERG

DRAWN BY

CHECKED BY

COMMISION NO. 2000068

DATE JANUARY 17, 2001

REVISIONS

E2.1

OF SHEETS

© COPYRIGHT 2000
HARDEN, REID, JANES & LICHTENBERG
THESE DRAWINGS WERE BEEN PREPARED SPECIFICALLY FOR THE TITLED PROJECT, THEY ARE NOT SUITABLE FOR USE ON ANY OTHER PROJECT. ALL RIGHTS RESERVED WITHOUT THE EXPRESS WRITTEN AUTHORIZATION OF THE ARCHITECT. REPRODUCTION IS PROHIBITED.

STATE OF OHIO
GERALD A PETRIC
REGISTERED PROFESSIONAL ENGINEER
E-40996

KORDA/NEMETH ENGINEERING, INC.
1650 WATERMARK DRIVE
COLUMBUS, OHIO 43215
DESIGNED BY Robert F. Gardner
DRAWN BY Tara K. Theodo
CHECKED BY
KNE JOB # 2000-0110

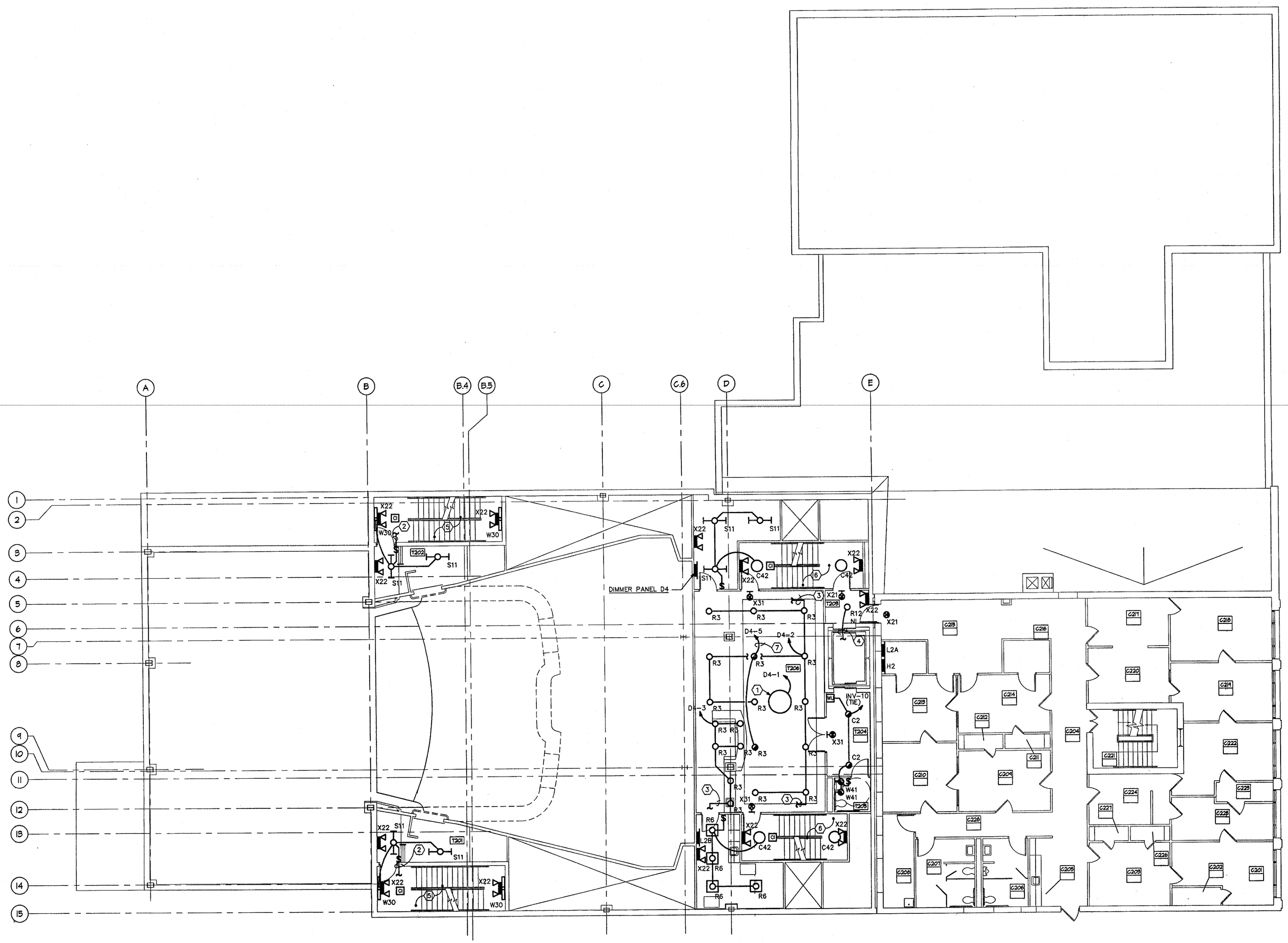

A SECOND FLOOR PLAN

1/8"=1'-0"

GENERAL NOTES

1. UNLESS NOTED OTHERWISE, ALL NIGHT LIGHTING, EMERGENCY, EXIT AND EMERGENCY EGRESS LIGHTING SHALL BE CONNECTED TO LOCAL BRANCH LIGHTING CIRCUIT, AHEAD OF LOCAL LIGHTING CONTROLS.
2. REFER TO E4.XX SERIES DRAWINGS FOR ADDITIONAL LIGHTING/CONTROL REQUIREMENTS.

CODED NOTES

1. CHANDELIER FURNISHED BY OWNER, INSTALLED BY ELECTRICAL CONTRACTOR. ELECTRICAL CONTRACTOR TO CONFIRM MINIMUM CIRCUIT AMPACITY REQUIRED BY CHANDELIER, PRIOR TO ROUGHING IN RACEWAY OR PULLING BRANCH CIRCUIT CONDUCTORS.
2. EXTEND BRANCH CIRCUIT THROUGH RELAY CONTROL PANEL TO TURN LIGHTING "OFF" REGARDLESS OF LOCAL LIGHT SWITCH POSITION.
3. EXTEND BRANCH CIRCUIT THROUGH LOCAL DIMMER/LIGHTING CONTROL. REFER TO E4.XX SERIES DRAWINGS.
4. EXTEND BRANCH CIRCUIT TO 3RD FLOOR ELEVATOR LOBBY LIGHTING.
5. CONNECT ALL LIGHTING IN THIS STAIRWELL TO TURN "ON" WHEN ANY ONE OCCUPANCY SENSOR IN THIS STAIRWELL IS ACTIVATED. ALL LIGHTING IN THIS STAIRWELL SHALL BE ON A COMMON BRANCH CIRCUIT AS SHOWN ON SHEET E2.0.
6. CONNECT ALL LIGHTING IN THIS STAIRWELL TO TURN "ON" WHEN ANY ONE OCCUPANCY SENSOR IN THIS STAIRWELL IS ACTIVATED. ALL LIGHTING IN THIS STAIRWELL SHALL BE ON A COMMON BRANCH CIRCUIT AS SHOWN ON SHEET E2.1.
7. EXTEND CIRCUIT TO DIMMER THROUGH BRANCH CIRCUIT AUTOMATIC TRANSFER PANEL. REFER TO BRANCH CIRCUIT TRANSFER PANEL SCHEDULE ON SHEET E5.3.

PASTIME THEATRE

PERFORMING ARTS CENTER

538 Main Street Coshocton, Ohio

HRJL

HARDEN • REID • JAMES • LUCHTENBERG

DRAWN BY

CHECKED BY

COMMISSION NO. 2000068

DATE JANUARY 11, 2001

REVISIONS

E2.2

OF SHEETS

© COPYRIGHT 2000

STATE OF OHIO
GERALD A. PETRIC
E-40996
REGISTERED PROFESSIONAL ENGINEER

KORDA/NEMETH ENGINEERING, INC.
1650 WATERMARK DRIVE
COLUMBUS, OHIO 43215

DESIGNED BY Robert F. Gardner
DRAWN BY Tara K. Theado
CHECKED BY
KNE JOB # 2000-0110

GENERAL NOTES

1. CONNECT ALL NIGHT LIGHTING, EMERGENCY, EXIT AND EMERGENCY EGRESS LIGHTING TO LOCAL BRANCH LIGHTING CIRCUIT, AHEAD OF LOCAL LIGHTING CONTROLS.
2. REFER TO E4.XX SERIES DRAWINGS FOR ADDITIONAL LIGHTING/ CONTROL REQUIREMENTS.
3. VERIFY EXACT LOCATION AND MOUNTING HEIGHTS OF ALL WALL MOUNTED LIGHT FIXTURES WITH ARCHITECT IN FIELD PRIOR TO ROUGH-IN.

⬡ CODED NOTES

1. EXTEND CIRCUIT THROUGH RELAY CONTROL PANEL.
2. PROVIDE NAMEPLATE ON SWITCH STATING "PLEASE TURN "OFF" PRIOR TO OPENING DOOR". LIGHT SWITCH SHALL BE WIRED TO CONTROL LIGHT FIXTURE ON EMERGENCY CIRCUIT AND RELAY REFERENCED IN CODED NOTE #4.
3. FLUSH JUNCTION BOX AND LOW VOLTAGE TRANSFORMER FOR AISLE LIGHTING FIXTURES MOUNTED IN SIDEWALL OF STAIR.
4. RELAY LOCATED ABOVE CEILING TO CONTROL NORMAL LIGHTING. RELAY TO BE CONTROLLED BY LIGHT SWITCH. REFER TO CODED NOTE #2.
5. EXTEND BRANCH CIRCUIT THROUGH RELAY PANEL.
6. REFER TO DETAIL E/E7.2 FOR SIMILAR MOUNTING AND ARCHITECTURAL ELEVATIONS FOR MOUNTING HEIGHTS.
7. JUNCTION BOX (FOR AISLE LIGHTING FIXTURE PROVIDED BY OTHERS). VERIFY EXACT LOCATION WITH MANUFACTURER PRIOR TO ROUGH-IN. JUNCTION BOX, FINAL CONNECTION AND ALL WIRING BY THIS CONTRACTOR.
8. EXTEND BRANCH CIRCUIT THROUGH RELAY PANEL TO TURN LIGHTING "OFF" REGARDLESS OF LOCAL SWITCH POSITION.
9. CHAIN SUSPENDED FIXTURE AT 8' ABOVE CATWALK, SUPPORTED FROM CATWALK ABOVE.
10. CONNECT ALL LIGHTING IN THIS STAIRWELL TO TURN "ON" WHEN ANY ONE OCCUPANCY SENSOR IN THIS STAIRWELL IS ACTIVATED. ALL LIGHTING IN THIS STAIRWELL SHALL BE ON A COMMON BRANCH CIRCUIT AS SHOWN ON SHEET E2.0.
11. CONNECT ALL LIGHTING IN THIS STAIRWELL TO TURN "ON" WHEN ANY ONE OCCUPANCY SENSOR IN THIS STAIRWELL IS ACTIVATED. ALL LIGHTING IN THIS STAIRWELL SHALL BE ON A COMMON BRANCH CIRCUIT AS SHOWN ON SHEET E2.1.
12. EXTEND CIRCUIT TO DIMMER THROUGH BRANCH CIRCUIT AUTOMATIC TRANSFER PANEL. REFER TO BRANCH CIRCUIT TRANSFER PANEL SCHEDULE ON SHEET E5.3.

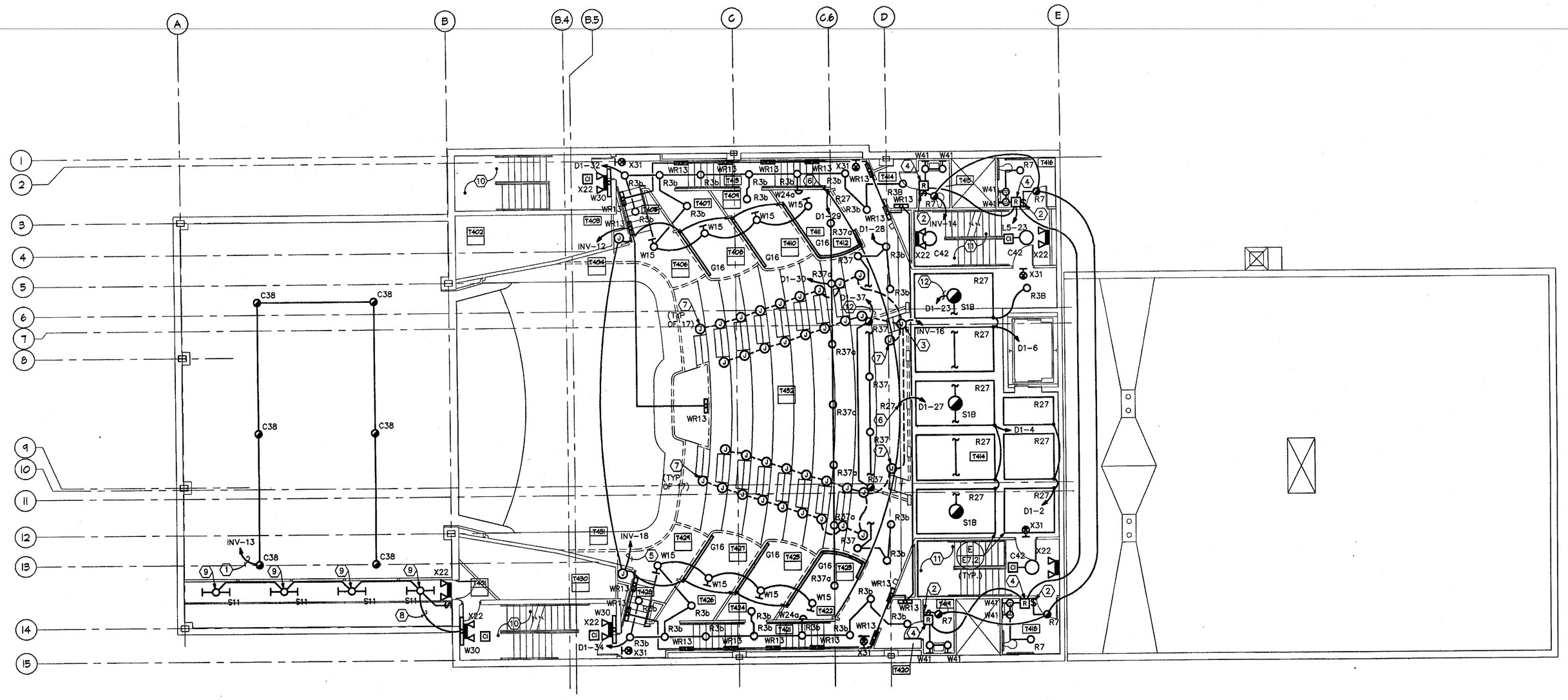

A FOURTH FLOOR PLAN

1/8"=1'-0"

KORDA/NEMETH ENGINEERING, INC.
1650 WATERMARK DRIVE
COLUMBUS, OHIO 43215
DESIGNED BY Robert T. Gardner
DRAWN BY Tara K. Theado
CHECKED BY
KNE JOB # 2000-0110

GERALD A. PETRIC E-40996 REGISTERED PROFESSIONAL ENGINEER STATE OF OHIO

PASTIME THEATRE

PERFORMING ARTS CENTER

538 Main Street Coshocton, Ohio

HRJL

DRAWN BY
CHECKED BY
COMMISSION NO. 2000046
DATE JANUARY 17, 2001
REVISIONS

E2.4

OF SHEETS

© COPYRIGHT 2000

GENERAL NOTES

1. CONNECT ALL NIGHT LIGHTING, EMERGENCY, EXIT AND EMERGENCY EGRESS LIGHTING TO LOCAL BRANCH LIGHTING CIRCUIT, AHEAD OF LOCAL LIGHTING CONTROLS.
2. REFER TO E4.XX SERIES DRAWINGS FOR ADDITIONAL LIGHTING/ CONTROL REQUIREMENTS.

CODED NOTES

1. MOUNT FIXTURE TO SIDE OF CATWALK. 7'-0" AFF. REFER TO DETAL B/E2.5.
2. EXTEND CIRCUIT THROUGH RELAY PANEL.
3. CONNECT ALL LIGHTING IN THIS STAIRWELL TO TURN "ON" WHEN ANY ONE OCCUPANCY SENSOR IN THIS STAIRWELL IS ACTIVATED. ALL LIGHTING IN THIS STAIRWELL SHALL BE ON A COMMON BRANCH CIRCUIT AS SHOWN ON SHEET E2.0.
4. CONNECT ALL LIGHTING IN THIS STAIRWELL TO TURN "ON" WHEN ANY ONE OCCUPANCY SENSOR IN THIS STAIRWELL IS ACTIVATED. ALL LIGHTING IN THIS STAIRWELL SHALL BE ON A COMMON BRANCH CIRCUIT AS SHOWN ON SHEET E2.1.
5. LIGHT FIXTURES TYPE S11 IN THIS AREA TO BE CHAIN SUSPENDED BELOW RIGGING. COORDINATE EXACT LOCATIONS AND MOUNTING HEIGHTS WITH RIGGING SYSTEM INSTALLER.
6. EXTEND CIRCUIT TO DIMMER THROUGH BRANCH CIRCUIT AUTOMATIC TRANSFER PANEL. REFER TO BRANCH CIRCUIT TRANSFER PANEL SCHEDULE ON SHEET E5.3.

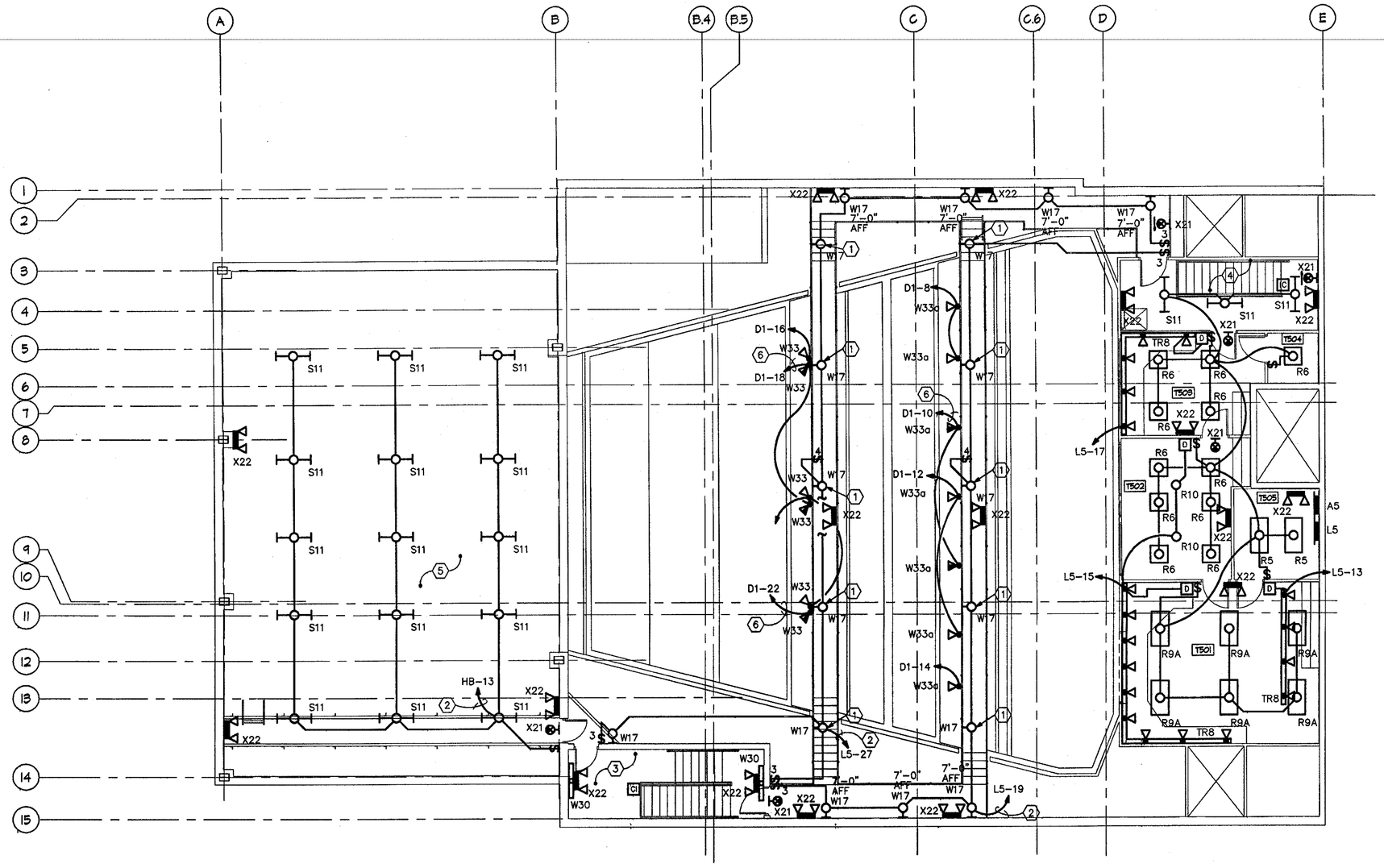

A FIFTH FLOOR PLAN
1/8"=1'-0"

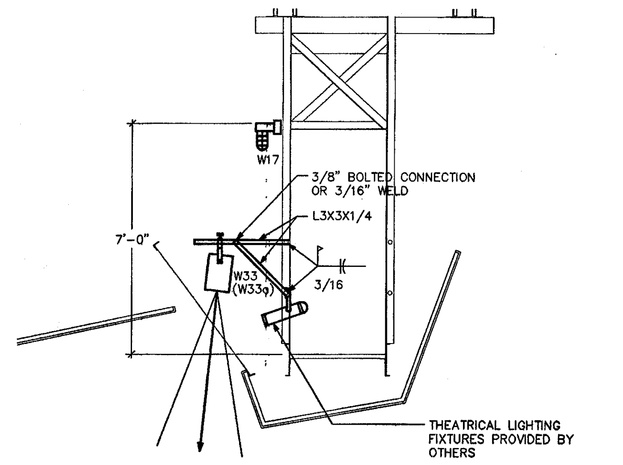

B DETAIL
LIGHTING ON CATWALK
3/8"=1'-0"

STATE OF OHIO
GERALD A. PETRIC
E-40996
REGISTERED
PROFESSIONAL ENGINEER

KORDA/NEMETH ENGINEERING, INC.
1650 WATERMARK DRIVE
COLUMBUS, OHIO 43215
DESIGNED BY Robert F. Gardner
DRAWN BY Tara K. Theado
CHECKED BY
KNE JOB # 2000-0110

PASTIME THEATRE
PERFORMING ARTS CENTER
538 Main Street Coshocton, Ohio

HRJL
HARDEN • REID • JAMES • LUCHTENBERG

DRAWN BY
CHECKED BY
COMMISSION NO. 2000066
DATE JANUARY 17, 2001
REVISIONS

E2.5

OF SHEETS

© COPYRIGHT 2000
HARDEN, REID, JAMES & LUCHTENBERG ARCHITECTS, INC.
THESE DOCUMENTS HAVE BEEN PREPARED SPECIFICALLY FOR THE TITLED PROJECT. THEY ARE NOT SUITABLE FOR USE ON OTHER PROJECTS OR IN OTHER LOCATIONS WITHOUT THE APPROVAL AND RESPONSIBILITY OF THE ARCHITECT. REPRODUCTION IS PROHIBITED.

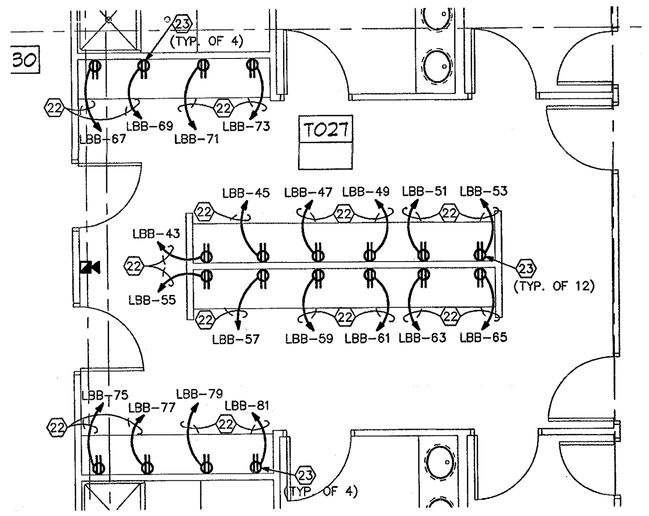

B ENLARGED PLAN

1/4" = 1'-0"

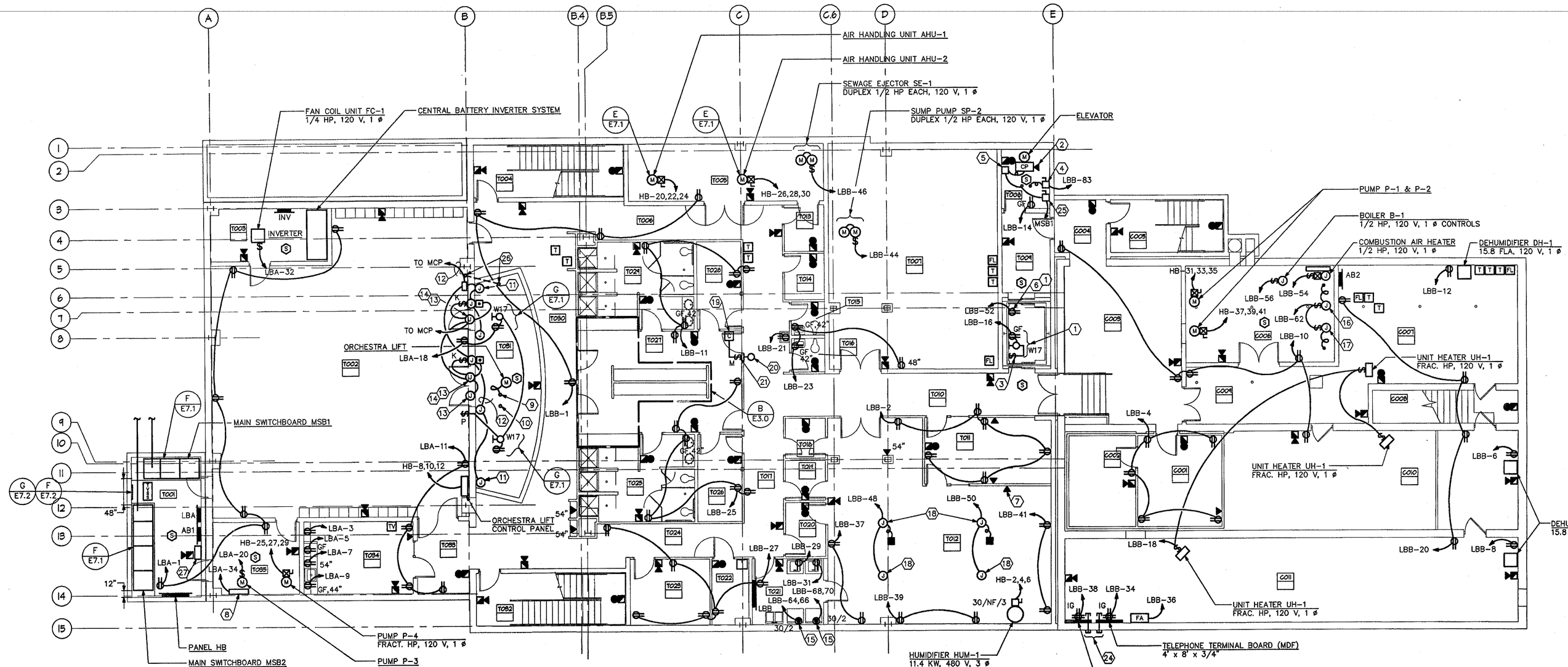

A BASEMENT FLOOR PLAN

1/8"=1'-0"

CODED NOTES

1. ALL DEVICES IN ELEVATOR PIT SHALL BE INSTALLED AT 50" TO BOTTOM OF DEVICE, OR SHALL BE RATED NEMA 4X. DEVICE LOCATIONS SHALL BE COORDINATED WITH THE ELEVATOR EQUIPMENT TO MAINTAIN CLEARANCES.
2. DEVICE INSTALLED ON ELEVATOR CONTROL PANEL.
3. DEVICE INSTALLED 18" ABOVE FINISHED FLOOR.
4. 30 AMP, 2 POLE DISCONNECT SWITCH FUSED AT 20 AMPS FOR 120 VOLT, 1 ø ELEVATOR CAB LTG./ALARM. EXTEND BRANCH CIRCUIT TO ELEVATOR CONTROLLER LOCATION.
5. MOLDED CASE SWITCH WITH SHUNT TRIP FOR SPRINKLER WATER FLOW.
6. RECEPTACLE FOR SUMP PUMP SP-1, (1/3 HP, 120 V, 1 ø).
7. VERIFY EXACT LOCATION OF DEVICE WITH ARCHITECT PRIOR TO ROUGH-IN.
8. TEMPERATURE CONTROL PANEL (120 V, 1 ø)
9. IN ADDITION TO THE ORCHESTRA LIFT FEEDER, PROVIDE 5 - #16 AWG CONDUCTORS IN 1" COMMON CONDUIT FROM ORCHESTRA LIFT MAIN CONTROL PANEL TO TERMINAL BOX #1 (PROVIDED BY ORCHESTRA LIFT MANUFACTURER) AT PIT LEVEL. VERIFY EXACT LOCATION OF STUB UP WITH ORCHESTRA LIFT MANUFACTURER. MAINTAIN 12" SEPARATION FROM CONDUIT DESCRIBED IN CODED NOTE #10.
10. 38 - #16 AWG IN 1.25" CONDUIT STUBBED UP (TO TERMINAL BOX #2 PROVIDED BY ORCHESTRA LIFT MFR.) AT PIT LEVEL. VERIFY EXACT LOCATION OF STUB UP WITH ORCHESTRA LIFT MANUFACTURER.
11. JUNCTION BOX MOUNTED ON TOP OF GUIDE CHASE.
12. 3/4" CONDUIT WITH CONTROL CABLE AS REQUIRED BY ORCHESTRA LIFT MANUFACTURER, TO BE EXTENDED TO ALL JUNCTION BOXES AS SHOWN. COORDINATE EXACT LOCATIONS OF JUNCTION BOXES WITH ORCHESTRA LIFT MANUFACTURER AND ARCHITECT IN FIELD PRIOR TO ROUGH-IN.
13. DOOR LOCK JUNCTION BOXES MOUNTED AT DOOR HEADER. COORDINATE EXACT LOCATION OF JUNCTION BOXES WITH ORCHESTRA LIFT MANUFACTURER IN FIELD.
14. PROVIDE 1/2" CONDUIT FROM JUNCTION BOX TO OVERRIDE KEY SWITCH (BY ORCHESTRA LIFT MFR.) AND EMERGENCY EXIT PUSH BUTTON STATION (BY ORCHESTRA LIFT MANUFACTURER), AS SHOWN. VERIFY EXACT LOCATION OF KEY SWITCH AND PUSH BUTTON STATION WITH ORCHESTRA LIFT MANUFACTURER IN FIELD.
15. SPECIAL PURPOSE RECEPTACLE PROVIDED BY OTHERS IN GUY GRAY BOX. BRANCH CIRCUIT AND FINAL CONNECTIONS BY ELECTRICAL CONTRACTOR.
16. JUNCTION BOX FOR DOMESTIC HOT WATER HEATER WTH-1 (120 VOLT, 1 ø).
17. JUNCTION BOX FOR DOMESTIC HOT WATER RECIRULATION PUMP RCP-1 (120 VOLT, 1 ø).
18. JUNCTION BOX MOUNTED TIGHT TO DECK ABOVE FOR POWER POLE CONNECTIONS.
19. CONTACTOR FOR CONTROL OF COUNTER RECEPTACLES, LOCATED ABOVE ACCESSIBLE CEILING.
20. PILOT LIGHT FOR SWITCH CONTROLLING RECEPTACLES AT MIRRORS ABOVE COUNTER IN DRESSING ROOM. PILOT LIGHT SHALL ILLUMINATE WHEN RECEPTACLE CIRCUITS ARE ENERGIZED. PILOT LIGHT SHALL BE SQUARE D CLASS 9001, TYPE K, HEAVY DUTY 120 VOLT PILOT LIGHT, CATALOG NO. 9001KP106, WITH GREEN GLASS DOME. MOUNT PILOT LIGHT IN SINGLE GANG FLUSH OUTLET BOX WITH STAINLESS STEEL SATIN FINISH FACE PLATE. SEE WIRING DIAGRAM J/E7.1.
21. 3 POSITION, MOMENTARY CONTACT SWITCH FOR COUNTER RECEPTACLE CIRCUIT CONTROL. ENGRAVE FACEPLATE "COUNTER RECEPTACLES". REFER TO DETAIL J/E7.1.
22. EXTEND DEDICATED RECEPTACLE CIRCUIT THROUGH CONTACTOR CONTROLLING DRESSING ROOM RECEPTACLES.
23. RECEPTACLE FURNISHED WITH LIGHT FIXTURE. REFER TO SHEET E2.0 FOR LIGHTING BRANCH CIRCUIT REQUIREMENTS AND DETAIL B/E7.1 FOR ADDITIONAL INFORMATION.
24. 1-4" CONDUIT SLEEVE (TELEPHONE) AND 1-3" CONDUIT SLEEVE (CATV) THROUGH WALL, TIGHT TO DECK ABOVE.
25. DISCONNECT SWITCH WITH AUXILIARY RELAY FOR BATTERY LOWERING DEVICE.
26. 3-3" CONDUITS (SOUND, 2 SPARE), 2-2" CONDUITS (LIFT CONTROL, STAGE ELECTRIC), AND 3-1" CONDUITS (CONVENIENCE POWER, AUDIO POWER AND AUDIO SPEAKER WIRES). COORDINATE EXACT REQUIREMENTS WITH ORCHESTRA LIFT MANUFACTURER AND THEATER CONSULTANT IN FIELD. ANY CONDUITS DESCRIBED ABOVE THAT ARE DUPLICATED, OR DEEMED NOT NECESSARY, SHALL REMAIN AS "SPARE". REFER TO CODED NOTES #9 AND #10 FOR ASSOCIATED SYSTEM CONDUITS.
27. SPARE FUSE CABINET.

GERALD A PETRIC E-40996 REGISTERED PROFESSIONAL ENGINEER
STATE OF OHIO

KORDA/NEMETH ENGINEERING, INC.
1650 WATERMARK DRIVE
COLUMBUS, OHIO 43215
DESIGNED BY Robert F. Gardner
DRAWN BY Tara K. Theado
CHECKED BY
KNE JOB # 2000-0110

PASTIME THEATRE

PERFORMING ARTS CENTER
538 Main Street Coshocton, Ohio

HRJL ARCHITECTS
HANSON+REID+JANES+LICHTENBERG
50 E. 6th ST. MOWRY, OHIO 43065-9369
PHONE (740) 965-4455 FAX (740) 965-4457

DRAWN BY
CHECKED BY
COMMISSION NO. 2000068
DATE JANUARY 1ST, 2001
REVISIONS

E3.0

OF SHEETS

© COPYRIGHT 2000
HANSON, REID, JANES, & LICHTENBERG
THESE DOCUMENTS HAVE BEEN PREPARED SPECIFICALLY FOR THE TITLED PROJECT. THEY ARE NOT SUITABLE FOR USE ON ANY OTHER PROJECT. ALL RIGHTS RESERVED UNDER THE COPYRIGHT LAWS OF THE UNITED STATES. NO DISTRIBUTION OF THE ARCHITECT. REPRODUCTION IS PROHIBITED.

A FIRST FLOOR PLAN 1/8"=1'-0"

CODED NOTES

1. DEVICE HORIZONTALLY MOUNTED, 9" ABOVE TOP OF MARQUEE.
2. JUNCTION BOX FOR AUTOMATIC FLUSH VALVE. COORDINATE EXACT MOUNTING HEIGHT AND LOCATION IN FIELD PRIOR TO ROUGH–IN (TYPICAL). ALL LINE AND LOW VOLTAGE WIRING AND CONNECTIONS PROVIDED BY THIS CONTRACTOR.
3. FLUSH JUNCTION BOX MOUNTED 18" A.F.F. FOR LOW VOLTAGE POWER SUPPLY TO AUTOMATIC FLUSH VALVES.
4. FLUSH JUNCTION BOX MOUNTED DIRECTLY ABOVE DOOR FRAME FOR FUTURE SECURITY SYSTEM DEVICE. PAINT BLANK COVERPLATE TO MATCH ADJACENT SURFACE. "BR" DENOTES BLANK COVERPLATE WITH POLISHED BRASS FINISH.
5. 3/4" CONDUIT BETWEEN VOICE/DATA OUTLETS. SAWCUT EXISTING CONCRETE SLAB AND PATCH TO MATCH EXISTING.
6. 1–1/4" CONDUIT TO TELEPHONE TERMINAL BOARD LOCATED IN BASEMENT. CONDUIT SHALL BE BELOW SLAB TO COLUMN 1, THEN STUBBED THROUGH EXISTING WALL TO CEILING SPACE OF THE FLOOR BELOW. REFER TO CODED NOTE #15. SAWCUT EXISTING CONCRETE SLAB AND PATCH TO MATCH EXISTING.
7. DUPLEX RECEPTACLE ABOVE CEILING FOR CONDENSATE PUMP P–5, FRAC. HP, 120 VOLT, 1 ø.
8. CABINET UNIT HEATER CUH–1, (FRAC. HP, 120 VOLT, 1 ø) RECESSED AND CEILING MOUNTED.
9. EXISTING SPRINKLER ALARM PANEL AND ASSOCIATED ALARM SIGNALING DEVICES TO BE RELOCATED INTO TRIBUNE BUILDING. VERIFY EXACT LOCATION IN FIELD. EXISTING TAMPER AND FLOW SWITCH MONITORING MODULES TO REMAIN, AND SHALL BE MONITORED BY RELOCATED SPRINKLER ALARM PANEL. MAINTAIN TELEPHONE CONNECTION BETWEEN RELOCATED SPRINKLER ALARM PANEL AND CENTRAL STATION MONITORING AGENCY.
10. TWO PORT TELEVISION OUTLET FOR BOTH RECEIVING AND BROADCASTING. EXTEND 2–1" CONDUITS TO CABLE TV TERMINAL BOARD IN BASEMENT ROOM C011. INSTALL UTILITY COMPANY (ADELPHIA) FURNISHED CATV CABLE.
11. PILOT LIGHT FOR SWITCH CONTROLLING RECEPTACLES AT MIRRORS ABOVE COUNTER IN DRESSING ROOM. PILOT LIGHT SHALL ILLUMINATE WHEN RECEPTACLE CIRCUITS ARE ENERGIZED. PILOT LIGHT SHALL BE SQUARE D CLASS 9001, TYPE K, HEAVY DUTY 120 VOLT PILOT LIGHT, CATALOG NO. 9001KP1G6, WITH GREEN GLASS DOME. MOUNT PILOT LIGHT IN SINGLE GANG FLUSH OUTLET BOX WITH STAINLESS STEEL SATIN FINISH FACE PLATE. SEE WIRING DIAGRAM J/E7.1.
12. EXTEND BRANCH CIRCUIT THROUGH 2–POLE SWITCH ADJACENT TO DOOR FOR CONTROL OF COUNTER RECEPTACLES.
13. TWO–POLE SWITCH FOR COUNTER RECEPTACLE CIRCUIT CONTROL. ENGRAVE FACEPLATE "COUNTER RECEPTACLES".
14. STAGE MANAGERS PANEL FOR ORCHESTRA LIFT. EXTEND 40 – #16 AWG THIN CONTROL CONDUCTORS IN 1–1/4" CONDUIT TO MAIN CONTROL PANEL FOR ORCHESTRA LIFT, LOCATED IN BASEMENT, ROOM #T002.
15. PROVIDE SLEEVES FOR VOICE/DATA CONDUITS FROM MEETING ROOMS INTO CEILING SPACE OF FLOOR BELOW.
16. SAWCUT EXISTING CONCRETE SLAB AND PATCH TO MATCH EXISTING FOR FLOOR RECEPTACLE BRANCH CIRCUITS.
17. 3/4" CONDUIT TO ORCHESTRA LIFT CONTROL PANEL.
18. DISCONNECT FOR MARQUEE SIGNAGE. VERIFY EXACT REQUIREMENTS AND LOCATION IN FIELD WITH MARQUEE SIGN MANUFACTURER.
19. TWIST LOCK RECEPTACLE, NEMA 15–20L, MOUNTED AT 12'–0", FOR DOCK LIGHT.
20. HANDICAP LIFT, 5 HP, 480 V, 3 ø.
21. DEVICE INSTALLED IN SHALLOW WALL BOX.
22. SURFACE MOUNTED DEVICE ON TOP OF TICKET BOOTH FOR HOLIDAY LIGHTING. EXTEND BRANCH CIRCUIT THRU LIGHTING CONTACTOR LC–1.
23. CORE DRILL THROUGH FLOOR TO FEED ALL DEVICES FROM BELOW.
24. RECEPTACLE FURNISHED WITH LIGHT FIXTURE. REFER TO SHEET E2.0 FOR LIGHTING BRANCH CIRCUIT REQUIREMENTS.
25. CATV AND TELEPHONE SERVICE (BY OTHERS) ATTACHED TO EXTERIOR WALL. REFER TO SHEET E3.0, ROOM #C011 FOR LOCATION OF POINT OF ENTRY.
26. OVERHEAD SPAN (BY OTHERS) ACROSS ALLEY TO UTILITY POLE, FOR CATV AND TELEPHONE SERVICE.
27. JUNCTION BOX MOUNTED IN THE CEILING SPACE OF THE FLOOR BELOW FOR RAILING SAFETY CONTACTS. VERIFY EXACT QUANTITY, LOCATIONS AND REQUIREMENTS WITH ORCHESTRA LIFT MANUFACTURER IN FIELD PRIOR TO ROUGH–IN.
28. DISPOSAL 1/2 HP, 120 V, 1 ø.
29. DUAL CIRCUIT MULTI–OUTLET STRIP MOUNTED AT 42" A.F.F.
30. COORDINATE EXACT LOCATION IN CASEWORK WITH ARCHITECT IN FIELD, PRIOR TO ROUGH–IN.
31. REPLACE EXISTING RECEPTACLE FOR EXISTING SUMP PUMP (1/3 HP, 120 V, 1 ø) TO REMAIN. PROVIDE BRANCH CIRCUIT AS SHOWN.
32. EXISTING DOCK LEVELER (5 HP, 208 V, 3 ø) TO REMAIN. DEMOLISH EXISTING HOMERUN AND PROVIDE BRANCH CIRCUIT AS SHOWN. EXISTING CONTROLS TO REMAIN.
33. EXISTING DOCK LEVELER CONTROLS TO REMAIN.

STATE OF OHIO GERALD A. PETRIC E-40996 REGISTERED PROFESSIONAL ENGINEER

KORDA/NEMETH ENGINEERING, INC.
1650 WATERMARK DRIVE
COLUMBUS, OHIO 43215
DESIGNED BY Robert F. Gardner
DRAWN BY Tara K. Theado
CHECKED BY
KNE JOB # 2000–0110

PASTIME THEATRE
PERFORMING ARTS CENTER
538 Main Street Coshocton, Ohio

HRJL
HARDEN • REID • JAHNES • LUCHTENBERG

DRAWN BY
CHECKED BY
COMMISSION NO. 2000049
DATE JANUARY 11, 2001
REVISIONS

E3.1

OF SHEETS

© COPYRIGHT 2000 HARDEN, REID, JAHNES & LUCHTENBERG ARCHITECTS, INC.
THESE DOCUMENTS HAVE BEEN PREPARED SPECIFICALLY FOR THE TITLED PROJECT. THEY ARE NOT SUITABLE FOR USE ON OTHER PROJECTS OR IN OTHER LOCATIONS WITHOUT THE APPROVAL AND PARTICIPATION OF THE ARCHITECT. REPRODUCTION IS PROHIBITED.

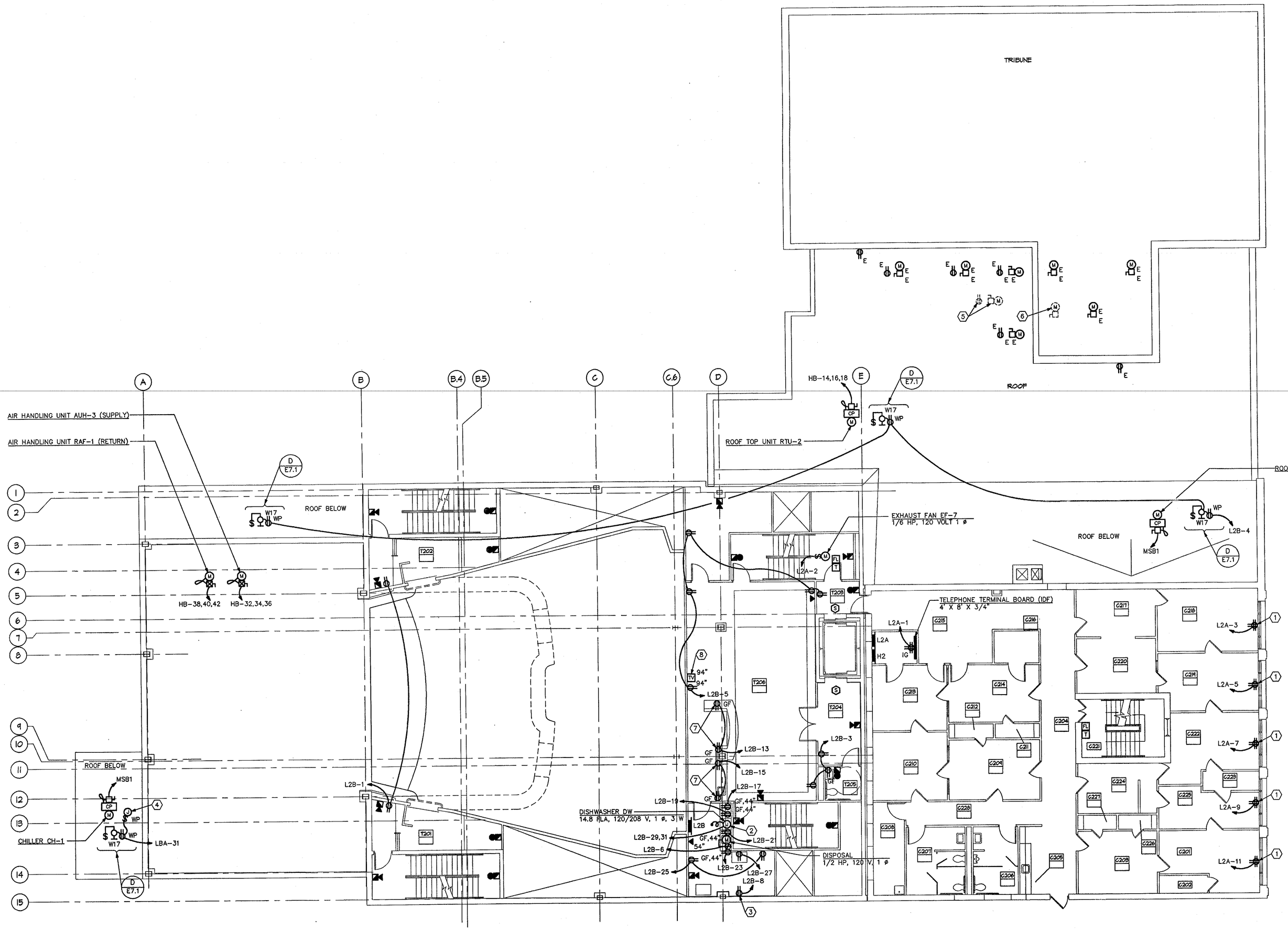

A SECOND FLOOR PLAN

1/8"=1'-0"

CODED NOTES

1. DEVICE AND BRANCH CIRCUIT TO BE PROVIDED UNDER SEPARATE CHAKOS BUILDING CONTRACT.
2. DISHWASHER, 3 KW, 208 VOLT, 1 ø.
3. ICE MACHINE, 120 VOLT, 1 ø.
4. CHILLER CH-1 CONTROL CIRCUIT, 120 V, 1 ø.
5. EXISTING CONDENSING UNIT #2 AND SERVICE RECEPTACLE TO BE DEMOLISHED.
6. EXISTING AIR HANDLING UNIT #2 TO BE DEMOLISHED.
7. COORDINATE EXACT LOCATION IN CASEWORK WITH ARCHITECT IN FIELD PRIOR TO ROUGH-IN.
8. TWO PORT TELEVISION OUTLET FOR BOTH RECEIVING AND BROADCASTING. EXTEND 2-1" CONDUITS TO CABLE TV TERMINAL BOARD IN BASEMENT ROOM C011. INSTALL UTILITY COMPANY (ADELPHIA) FURNISHED CATV CABLE.

PASTIME THEATRE

PERFORMING ARTS CENTER

538 Main Street Coshocton, Ohio

HRJL

DRAWN BY

CHECKED BY

COMMISSION NO. 2000065

DATE JANUARY 17, 2001

REVISIONS

E3.2

OF SHEETS

© COPYRIGHT 2000

STATE OF OHIO
GERALD A. PETRIC
E-40996
REGISTERED PROFESSIONAL ENGINEER

KORDA/NEMETH ENGINEERING, INC.
1650 WATERMARK DRIVE
COLUMBUS, OHIO 43215

DESIGNED BY Robert F. Gardner
DRAWN BY Tara K. Theado
CHECKED BY

KNE JOB # 2000-0110

CODED NOTES

1. DEVICE AND BRANCH CIRCUIT TO BE PROVIDED UNDER SEPERATE CHACOS BUILDING CONTRACT.

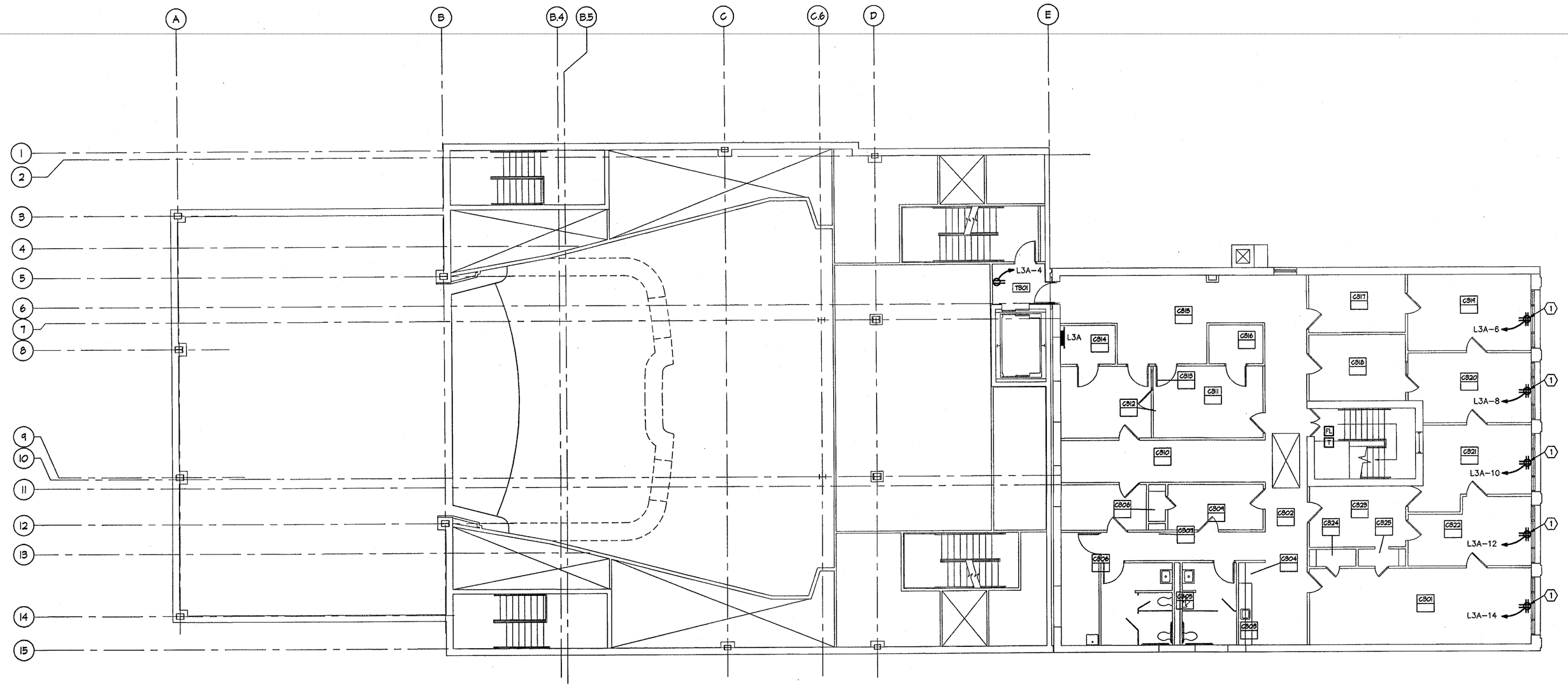

A THIRD FLOOR PLAN

1/8"=1'-0"

N

KORDA/NEMETH ENGINEERING, INC.
1650 WATERMARK DRIVE
COLUMBUS, OHIO 43215

DESIGNED BY Robert F. Gardner
DRAWN BY Tara K. Theado
CHECKED BY

KNE JOB # 2000-0110

STATE OF OHIO · GERALD A. PETRIC · E-40996 · REGISTERED PROFESSIONAL ENGINEER

PASTIME THEATRE

PERFORMING ARTS CENTER

538 Main Street Coshocton, Ohio

HRJL ARCHITECTS

HAYDEN • REID • JANNES • LICHTENBERG

DRAWN BY

CHECKED BY

COMMISSION NO. 2000048

DATE JANUARY 11, 2001

REVISIONS

E3.3

OF SHEETS

© COPYRIGHT 2000
HAYDEN, REID, JANNES & LICHTENBERG ARCHITECTS, INC.

THESE DRAWINGS HAVE BEEN PREPARED EXCLUSIVELY FOR THE TITLED PROJECT. THEY ARE NOT TO BE USED IN WHOLE OR IN PART FOR ANY OTHER PURPOSE OR LOCATION WITHOUT THE APPROVAL AND PARTICIPATION OF THE ARCHITECT. REPRODUCTION IS PROHIBITED.

CODED NOTES

1. DEVICE AND BRANCH CIRCUIT TO BE PROVIDED UNDER SEPERATE CHACOS BUILDING CONTRACT.
2. DEVICE TO BE LOCATED 18" ABOVE GRIDIRON.

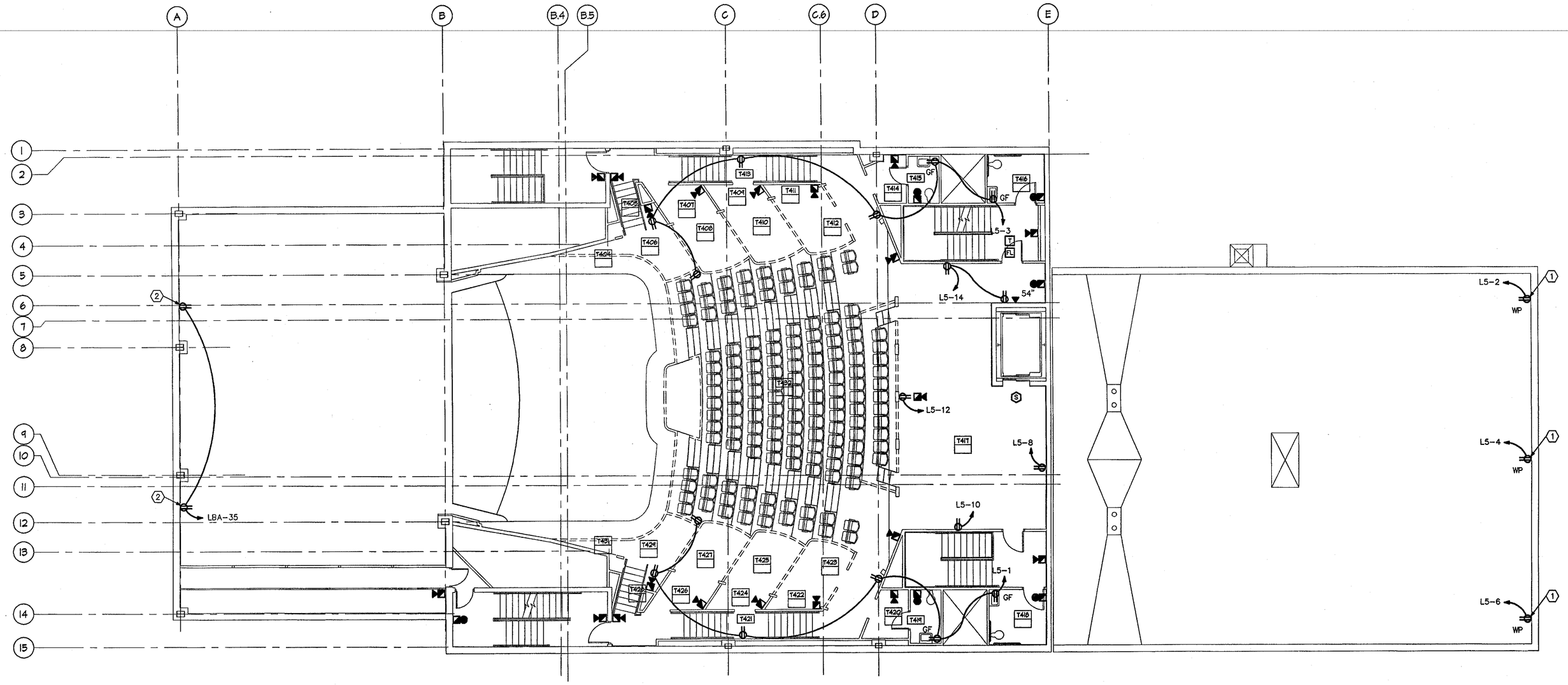

A FOURTH FLOOR PLAN

1/8"=1'-0"

N

STATE OF OHIO
GERALD A. PETRIC
E-40996
REGISTERED PROFESSIONAL ENGINEER

KORDA/NEMETH ENGINEERING, INC.
1650 WATERMARK DRIVE
COLUMBUS, OHIO 43215

DESIGNED BY Robert F. Gardner
DRAWN BY Tara K. Theado
CHECKED BY
KNE JOB # 2000-0110

PASTIME THEATRE

PERFORMING ARTS CENTER
538 Main Street Coshocton, Ohio

HRJL
ARCHITECTS
HARDEN • REID • JAMES • LUCHTENBERG

DRAWN BY
CHECKED BY
COMMISSION NO. 2000065
DATE JANUARY 17, 2001
REVISIONS

E3.4

OF SHEETS

© COPYRIGHT 2000
HARDEN, REID, JAMES & LUCHTENBERG ARCHITECTS, INC.
THESE DOCUMENTS HAVE BEEN PREPARED SPECIFICALLY FOR THE TITLED PROJECT. THEY ARE NOT SUITABLE FOR USE ON OTHER PROJECTS OR IN OTHER LOCATIONS WITHOUT THE APPROVAL AND PARTICIPATION OF THE ARCHITECT. REPRODUCTION IS PROHIBITED.

CODED NOTES

1. LOCATE HEAT DETECTOR WITHIN 2 FEET OF DETECTOR, AND BELOW SPRINKLER HEAD.
2. SURFACE MOUNTED DEVICE MOUNTED ON ROOF ON REAR SIDE OF PARAPET.

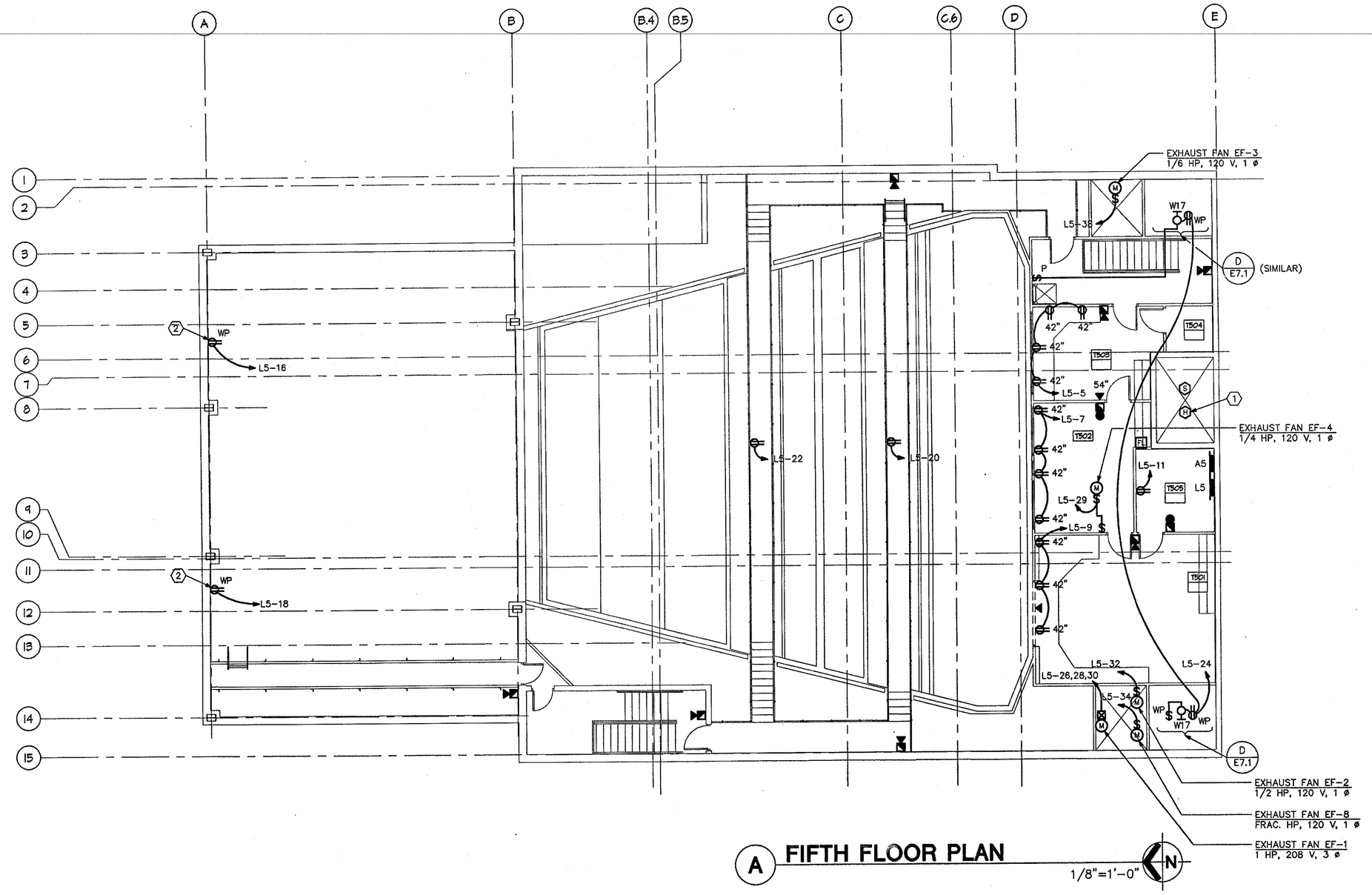

A FIFTH FLOOR PLAN

1/8"=1'-0"

N

PASTIME THEATRE

PERFORMING ARTS CENTER

538 Main Street Coshocton, Ohio

HRJL

HARDEN • REID • JAMES • LUCHTENBERG

DRAWN BY

CHECKED BY

COMMISSION NO. 2000068

DATE JANUARY 17, 2001

REVISIONS

E3.5

OF SHEETS

© COPYRIGHT 2000
HARDEN, REID, JAMES & LUCHTENBERG ARCHITECTS, INC.

THESE DOCUMENTS HAVE BEEN PREPARED SPECIFICALLY FOR THE USE OF PROJECT. THEY ARE NOT SUITABLE FOR USE ON OTHER PROJECTS OR IN OTHER LOCATIONS WITHOUT THE ARTICULATE AND PERMISSION OF THE ARCHITECT. REPRODUCTION IS PROHIBITED.

STATE OF OHIO
GERALD A. PETRIC
E-40996
REGISTERED PROFESSIONAL ENGINEER

KORDA/NEMETH ENGINEERING, INC.
1650 WATERMARK DRIVE
COLUMBUS, OHIO 43215

DESIGNED BY Robert F. Gardner
DRAWN BY Tara K. Theado
CHECKED BY

KNE JOB # 2000-0110

GENERAL NOTES

1. NOT ALL CONDUITS ARE SHOWN. REFER TO SCHEDULES IN THEATER CONSULTANTS PACKAGE FOR ADDITIONAL CONDUIT AND CONDUIT ROUTING REQUIREMENTS.
2. ALL RACEWAYS FOR THEATER LIGHTING SYSTEMS AND SOUND/INTERCOM SYSTEMS SHALL BE PERMANENTLY IDENTIFIED AS THEATER LIGHTING SYSTEM (TL) OR SOUND SYSTEM (SD) AND SHALL BE IDENTIFIED USING AND IDENTIFICATION SYSTEM TO CLEARLY IDENTIFY LOCATION OF RACEWAY TERMINATIONS.
3. ELECTRICAL CONTRACTOR SHALL BE RESPONSIBLE TO MAINTAIN A 3 % VOLTAGE DROP FROM THE DEVICE TO THE BRANCH PANEL BOARD, ON ALL 20 AMP, 120 VOLT THEATER LIGHTING DEVICES. CONDUCTOR SIZES SHALL BE BASED ON ACTUAL INSTALLED CONDUCTOR LENGTHS AS FOLLOWS:
   - 0 – 50 FEET SHALL USE #12 AWG CONDUCTORS
   - 51 – 75 FEET SHALL USE #11 AWG CONDUCTORS
   - 76 – 125 FEET SHALL USE #8 AWG CONDUCTORS
   - 126 – 200 FEET SHALL USE #6 AWG CONDUCTORS
   - 201 – 300 FEET SHALL USE #4 AWG CONDUCTORS
   - 301 – 400 FEET SHALL USE #3 AWG CONDUCTORS

CODED NOTES

1. ELECTRICAL CONTRACTOR TO CONSULT WITH DIMMING SYSTEM VENDER AND THEATER CONSULTANT FOR ACTUAL LAYOUT OF DIMMERS, DISCONNECT SWITCHES, RACKS, EMERGENCY INVERTER SYSTEM, ETC.

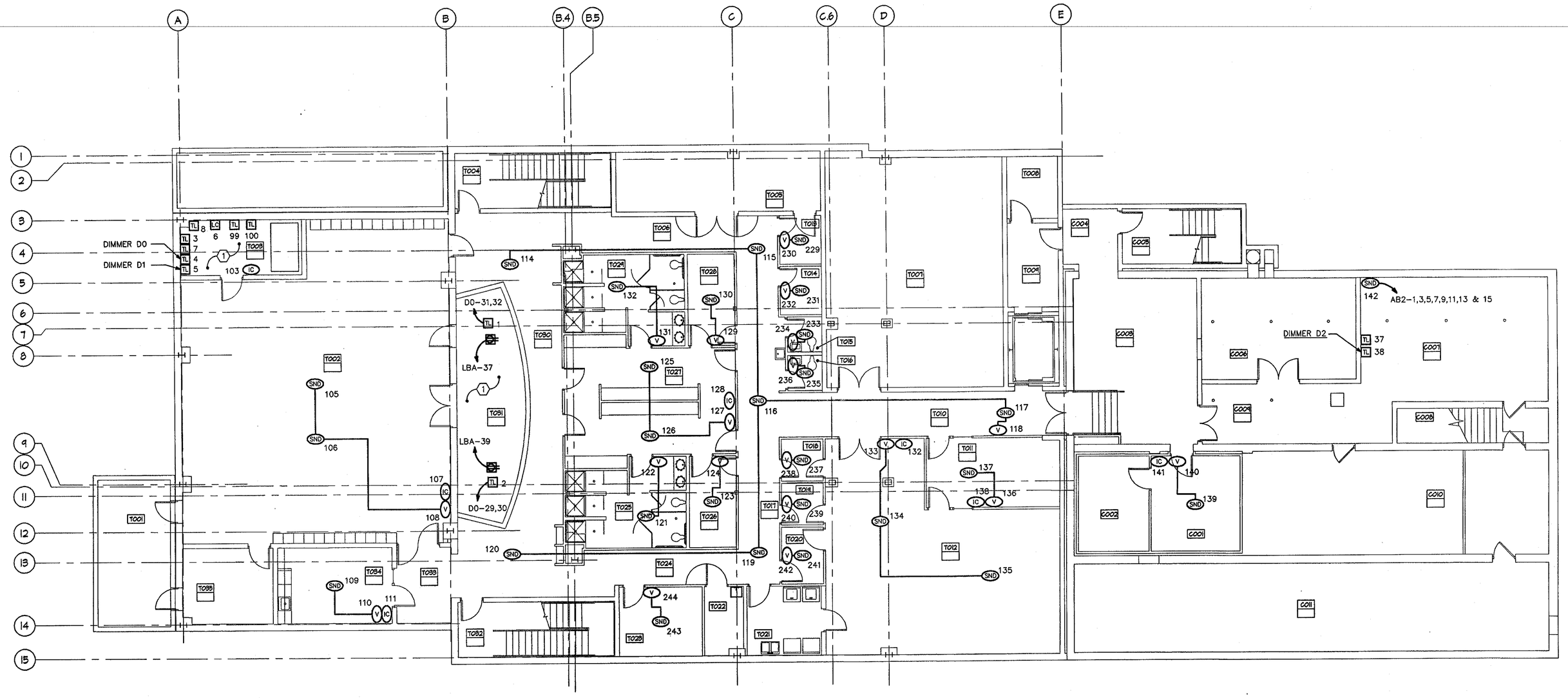

A BASEMENT FLOOR PLAN
1/8"=1'-0"

THEATER SYSTEMS SYMBOLS

- LC — LIGHTING CONTROL SYSTEM DEVICE. SUB-SCRIPT INDICATES BOX NUMBER REFERENCED IN THEATER CONSULTANTS PACKAGE. SEE THEATER CONSULTANTS PACKAGE FOR ADDITIONAL INFORMATION.
- TL — THEATER LIGHTING SYSTEM WIRING DEVICE. SUB-SCRIPT INDICATES BOX NUMBER REFERENCED IN THEATER CONSULTANTS PACKAGE. SEE THEATER CONSULTANTS PACKAGE FOR ADDITIONAL INFORMATION.
- THEATER AC POWER WIRING DEVICE. SUB-SCRIPT INDICATES BOX NUMBER REFERENCED IN THEATER CONSULTANTS PACKAGE. SEE THEATER CONSULTANTS PACKAGE FOR ADDITIONAL INFORMATION.
- IC — INTERCOM SYSTEM WIRING DEVICE. SUB-SCRIPT INDICATES BOX NUMBER REFERENCED IN THEATER CONSULTANTS PACKAGE. SEE THEATER CONSULTANTS PACKAGE FOR ADDITIONAL INFORMATION.
- SND — THEATRE SOUND SYSTEM WIRING DEVICE. SUB-SCRIPT INDICATES BOX NUMBER REFERENCED IN THEATER CONSULTANTS PACKAGE. SEE THEATER CONSULTANTS PACKAGE FOR ADDITIONAL INFORMATION.
- V — THEATRE SOUND SYSTEM WIRING DEVICE. SUB-SCRIPT INDICATES BOX NUMBER REFERENCED IN THEATER CONSULTANTS PACKAGE. SEE THEATER CONSULTANTS PACKAGE FOR ADDITIONAL INFORMATION.

STATE OF OHIO
GERALD A. PETRIC
E-40996
REGISTERED
PROFESSIONAL ENGINEER

KORDA/NEMETH ENGINEERING, INC.
1650 WATERMARK DRIVE
COLUMBUS, OHIO 43215
DESIGNED BY Robert F. Gardner
DRAWN BY Tara K. Theado
CHECKED BY
KNE JOB # 2000-0110

PASTIME THEATRE

PERFORMING ARTS CENTER
538 Main Street Coshocton, Ohio

HRJL ARCHITECTS
HARDEN • REID • JAVINES • LUCHTENBURG
[redacted]

DRAWN BY
CHECKED BY
COMMISSION NO. 2000065
DATE JANUARY 17, 2001
REVISIONS

[redacted]

E4.0

OF SHEETS

© COPYRIGHT 2000
HARDEN, REID, JAVINES & LUCHTENBURG ARCHITECTS, INC.
THESE DOCUMENTS HAVE BEEN PREPARED SPECIFICALLY FOR THE UTILIZED PROJECT. THEY ARE NOT SUITABLE FOR USE ON OTHER PROJECTS OR IN OTHER LOCATIONS WITHOUT THE LATTERS AND PERFORMANCE OF THE ARCHITECT. REPRODUCTION IS PROHIBITED.

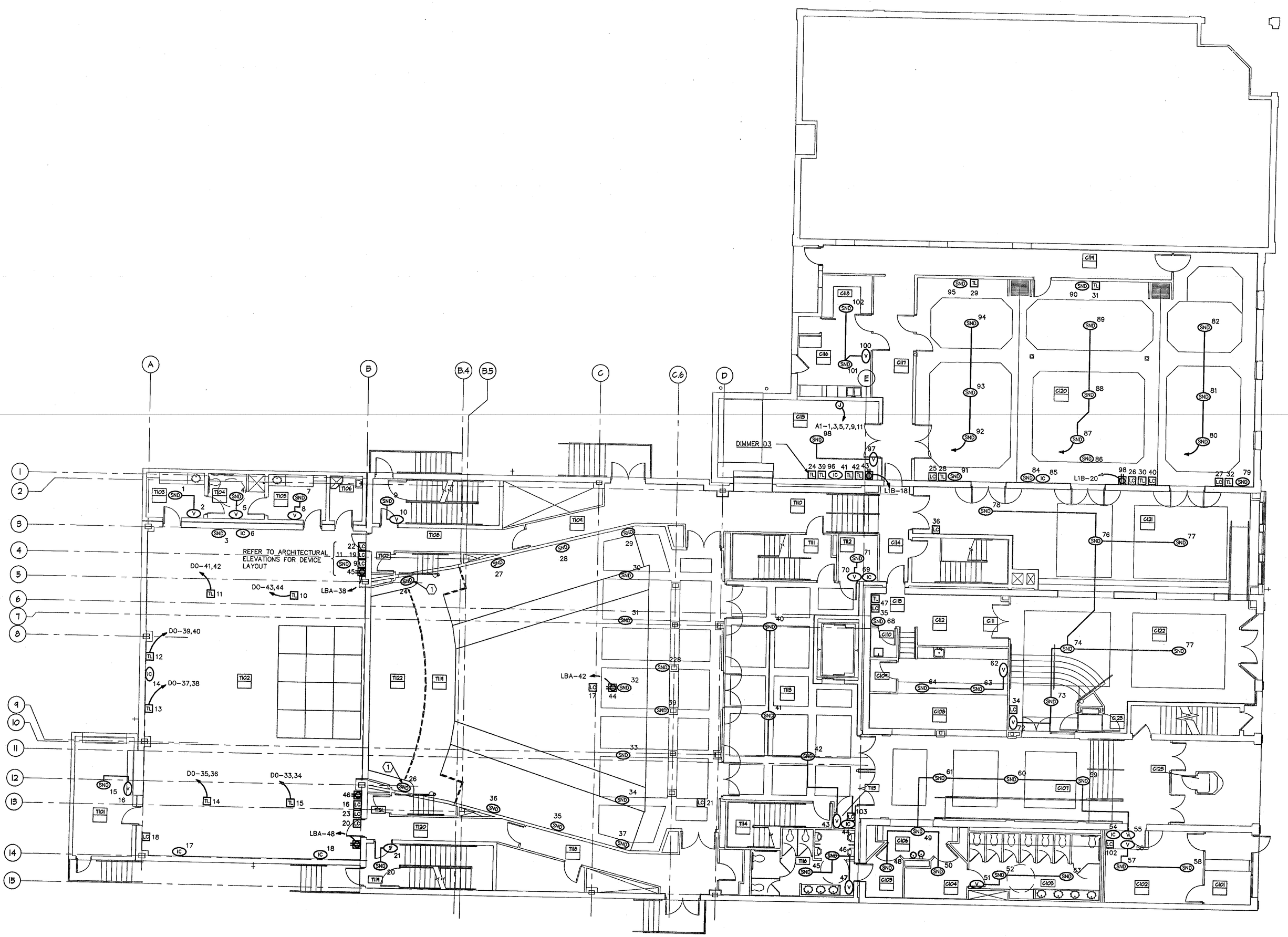

A FIRST FLOOR PLAN

1/8"=1'-0"

GENERAL NOTES

1. NOT ALL CONDUITS ARE SHOWN. REFER TO SCHEDULES IN THEATER CONSULTANTS PACKAGE FOR ADDITIONAL CONDUIT AND CONDUIT ROUTING REQUIREMENTS.
2. ALL RACEWAYS FOR THEATER LIGHTING SYSTEMS AND SOUND/INTERCOM SYSTEMS SHALL BE PERMANENTLY IDENTIFIED AS THEATER LIGHTING SYSTEM (TL) OR SOUND SYSTEM (SD) AND SHALL BE IDENTIFIED USING AND IDENTIFICATION SYSTEM TO CLEARLY IDENTIFY LOCATION OF RACEWAY TERMINATIONS.
3. ELECTRICAL CONTRACTOR SHALL BE RESPONSIBLE TO MAINTAIN A 3 % VOLTAGE DROP FROM THE DEVICE TO THE BRANCH PANEL BOARD, ON ALL 20 AMP, 120 VOLT THEATER LIGHTING DEVICES. CONDUCTOR SIZES SHALL BE BASED ON ACTUAL INSTALLED CONDUCTOR LENGTHS AS FOLLOWS;
   - 0 – 50 FEET SHALL USE #12 AWG CONDUCTORS
   - 51 – 75 FEET SHALL USE #11 AWG CONDUCTORS
   - 76 – 125 FEET SHALL USE #8 AWG CONDUCTORS
   - 126 – 200 FEET SHALL USE #6 AWG CONDUCTORS
   - 201 – 300 FEET SHALL USE #4 AWG CONDUCTORS
   - 301 – 400 FEET SHALL USE #3 AWG CONDUCTORS
4. COORDINATE PLACEMENT OF BOXES: 27,28,29,30,31,32,33,34, 35,36,37 WITH ARCHITECTURAL ELEVATIONS AND SOUND CONTRACTOR.
5. REFER TO SHEET E4.0 FOR THEATRICAL LIGHTING CONDUCTOR SIZES. CONDUIT SIZES SHALL BE ADJUSTED FOR "CONDUCTOR FILL" PER N.E.C.

CODED NOTES

1. COORDINATE OPENING AND SPACE CONSTRUCTION WITH SOUND SYSTEM CONTRACTOR AND THEATER CONSULTANT.

PASTIME THEATRE

PERFORMING ARTS CENTER

538 Main Street Coshocton, Ohio

HRJL

HARDEN • REID • JANNES • LUCHTENBERG

DRAWN BY

CHECKED BY

COMMISSION NO. 2000065

DATE JANUARY 17, 2001

REVISIONS

E4.1

OF SHEETS

© COPYRIGHT 2000
HARDEN, REID, JANNES & LUCHTENBERG
ARCHITECTS, INC.
THESE DOCUMENTS HAVE BEEN PREPARED SPECIFICALLY FOR THE USE OF THIS PROJECT. THEY ARE NOT SUITABLE FOR USE ON OTHER PROJECTS OR IN OTHER LOCATIONS WITHOUT THE APPROVAL AND PERFORMANCE OF THE ARCHITECT. REPRODUCTION IS PROHIBITED.

STATE OF OHIO
GERALD A. PETRIC
E-40996
REGISTERED
PROFESSIONAL ENGINEER

KORDA/NEMETH ENGINEERING, INC.
1650 WATERMARK DRIVE
COLUMBUS, OHIO 43215
DESIGNED BY Robert F. Gardner
DRAWN BY Tara K. Theado
CHECKED BY
KNE JOB # 2000-0110

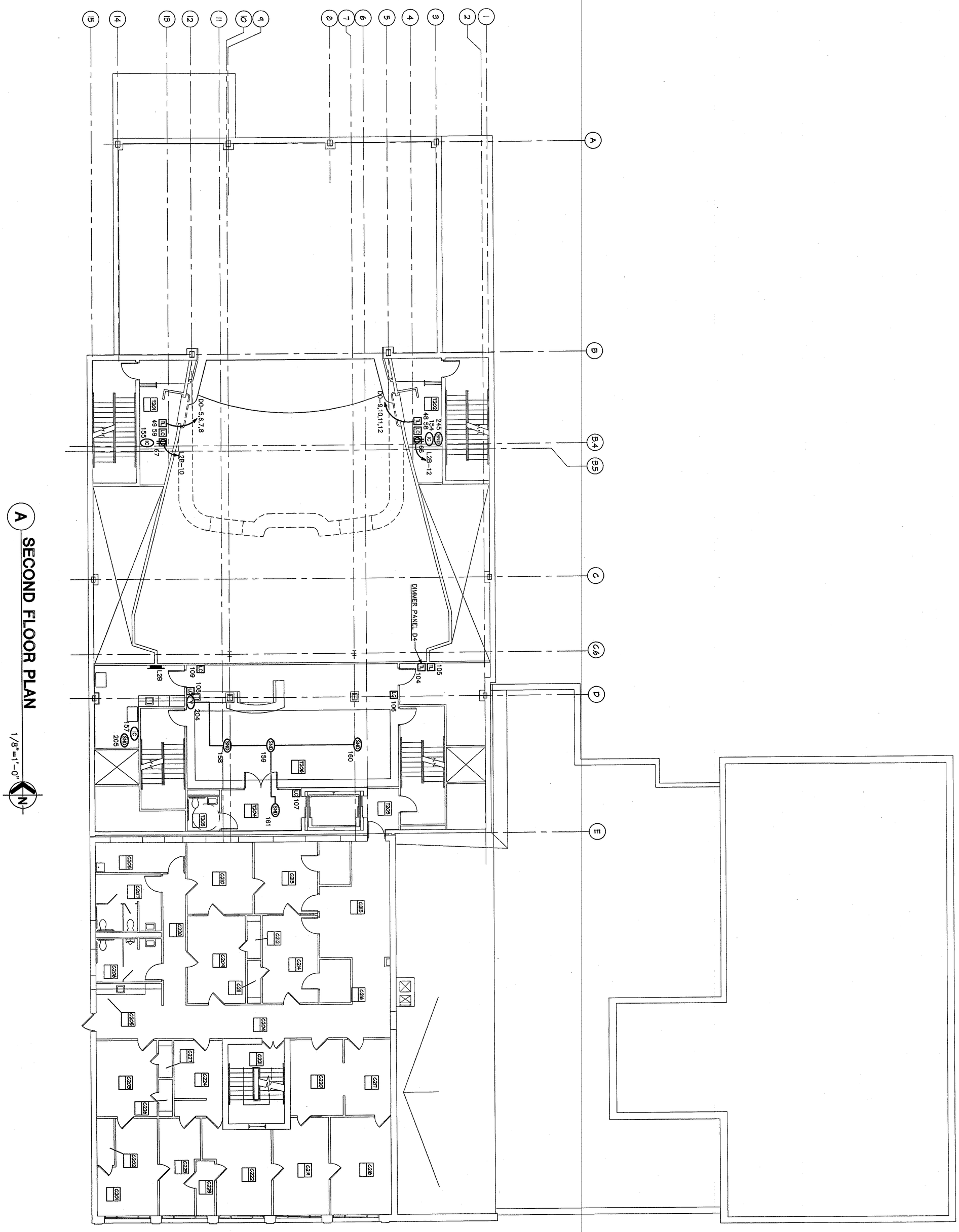

A SECOND FLOOR PLAN

1/8"=1'-0"

GENERAL NOTES

1. NOT ALL CONDUITS ARE SHOWN. REFER TO SCHEDULES IN THEATER CONSULTANTS PACKAGE FOR ADDITIONAL CONDUIT AND CONDUIT ROUTING REQUIREMENTS.
2. ALL RACEWAYS FOR THEATER LIGHTING SYSTEMS AND SOUND/INTERCOM SYSTEMS SHALL BE PERMANENTLY IDENTIFIED AS THEATER LIGHTING SYSTEM (TL) OR SOUND SYSTEM (SD) AND SHALL BE IDENTIFIED USING AND IDENTIFICATION SYSTEM TO CLEARLY IDENTIFY LOCATION OF RACEWAY TERMINATIONS.
3. ELECTRICAL CONTRACTOR SHALL BE RESPONSIBLE TO MAINTAIN A 3 % VOLTAGE DROP FROM THE DEVICE TO THE BRANCH PANEL BOARD, ON ALL 20 AMP, 120 VOLT THEATER LIGHTING DEVICES. CONDUCTOR SIZES SHALL BE BASED ON ACTUAL INSTALLED CONDUCTOR LENGTHS AS FOLLOWS:
   0 - 50 FEET SHALL USE #12 AWG CONDUCTORS
   51 - 75 FEET SHALL USE #11 AWG CONDUCTORS
   76 - 125 FEET SHALL USE #8 AWG CONDUCTORS
   126 - 200 FEET SHALL USE #6 AWG CONDUCTORS
   201 - 300 FEET SHALL USE #4 AWG CONDUCTORS
   301 - 400 FEET SHALL USE #3 AWG CONDUCTORS
4. COORDINATE PLACEMENT OF BOXES: 27,28,29,30,31,32,33,34, 35,36,37 WITH ARCHITECTURAL ELEVATIONS AND SOUND CONTRACTOR.

STATE OF OHIO
GERALD A. PETRIC
E-40996
REGISTERED PROFESSIONAL ENGINEER

KORDA/NEMETH ENGINEERING, INC.
1650 WATERMARK DRIVE
COLUMBUS, OHIO 43215
DESIGNED BY Robert F. Gardner
DRAWN BY Tara K. Theado
CHECKED BY
KNE JOB # 2000-0110

PASTIME THEATRE

PERFORMING ARTS CENTER

538 Main Street Coshocton, Ohio

HARDEN • REID • JAHNES • LICHTENBERG

DRAWN BY
CHECKED BY
COMMISSION NO. 2000065
DATE JANUARY 11, 2001
REVISIONS

E4.2

OF SHEETS

© COPYRIGHT 2000 HARDEN, REID, JAHNES & LICHTENBERG ARCHITECTS, INC.

GENERAL NOTES

1. NOT ALL CONDUITS ARE SHOWN. REFER TO SCHEDULES IN THEATER CONSULTANTS PACKAGE FOR ADDITIONAL CONDUIT AND CONDUIT ROUTING REQUIREMENTS.

2. ALL RACEWAYS FOR THEATER LIGHTING SYSTEMS AND SOUND/INTERCOM SYSTEMS SHALL BE PERMANENTLY IDENTIFIED AS THEATER LIGHTING SYSTEM (TL) OR SOUND SYSTEM (SD) AND SHALL BE IDENTIFIED USING AND IDENTIFICATION SYSTEM TO CLEARLY IDENTIFY LOCATION OF RACEWAY TERMINATIONS.

3. ELECTRICAL CONTRACTOR SHALL BE RESPONSIBLE TO MAINTAIN A 3 % VOLTAGE DROP FROM THE DEVICE TO THE BRANCH PANEL BOARD, ON ALL 20 AMP, 120 VOLT THEATER LIGHTING DEVICES. CONDUCTOR SIZES SHALL BE BASED ON ACTUAL INSTALLED CONDUCTOR LENGTHS AS FOLLOWS:
   - 0 – 50 FEET SHALL USE #12 AWG CONDUCTORS
   - 51 – 75 FEET SHALL USE #11 AWG CONDUCTORS
   - 76 – 125 FEET SHALL USE #8 AWG CONDUCTORS
   - 126 – 200 FEET SHALL USE #6 AWG CONDUCTORS
   - 201 – 300 FEET SHALL USE #4 AWG CONDUCTORS
   - 301 – 400 FEET SHALL USE #3 AWG CONDUCTORS

4. COORDINATE PLACEMENT OF BOXES: 27,28,29,30,31,32,33,34, 35,36,37 WITH ARCHITECTURAL ELEVATIONS AND SOUND CONTRACTOR.

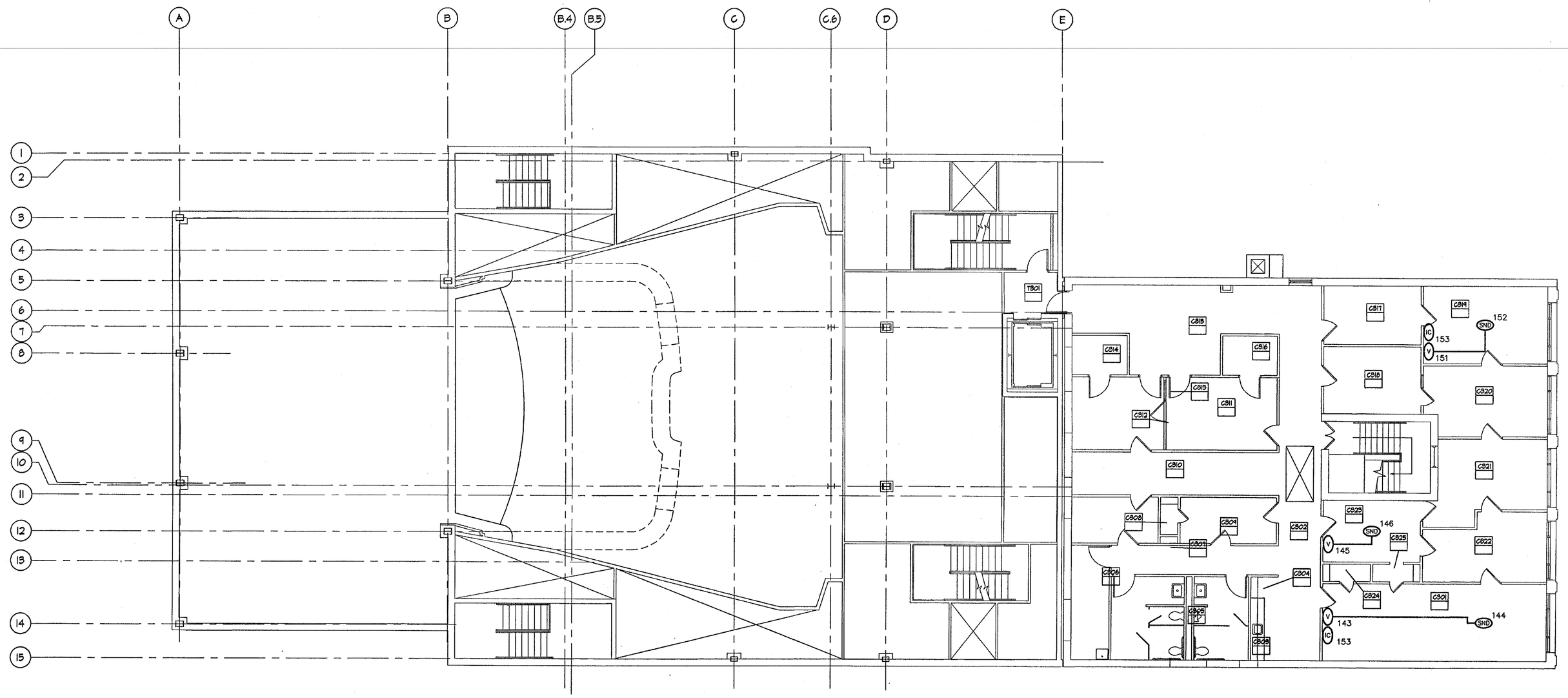

A THIRD FLOOR PLAN

1/8"=1'-0"

N

STATE OF OHIO
GERALD A. PETRIC
E-40996
REGISTERED PROFESSIONAL ENGINEER

KORDA/NEMETH ENGINEERING, INC.
1650 WATERMARK DRIVE
COLUMBUS, OHIO 43215
DESIGNED BY Robert F. Gardner
DRAWN BY Tara K. Theado
CHECKED BY
KNE JOB # 2000-0110

PASTIME THEATRE

PERFORMING ARTS CENTER
538 Main Street Coshocton, Ohio

HRJL ARCHITECTS
HARDEN • REID • JAMES • LUCKTENBERG

DRAWN BY
CHECKED BY
COMMISSION NO. 2000065
DATE JANUARY 17, 2001
REVISIONS

E4.3

OF SHEETS

© COPYRIGHT 2000
HARDEN, REID, JAMES & LUCKTENBERG ARCHITECTS, INC.
THESE DOCUMENTS WERE PREPARED SPECIFICALLY FOR THE TITLED PROJECT. THEY ARE NOT SUITABLE FOR USE ON OTHER PROJECTS OR IN OTHER LOCATIONS WITHOUT THE APPROVAL AND PERMISSION OF THE ARCHITECT. REPRODUCTION IS PROHIBITED.

GENERAL NOTES

1. NOT ALL CONDUITS ARE SHOWN. REFER TO SCHEDULES IN THEATER CONSULTANTS PACKAGE FOR ADDITIONAL CONDUIT AND CONDUIT ROUTING REQUIREMENTS.

2. ALL RACEWAYS FOR THEATER LIGHTING SYSTEMS AND SOUND/INTERCOM SYSTEMS SHALL BE PERMANENTLY IDENTIFIED AS THEATER LIGHTING SYSTEM (TL) OR SOUND SYSTEM (SD) AND SHALL BE IDENTIFIED USING AND IDENTIFICATION SYSTEM TO CLEARLY IDENTIFY LOCATION OF RACEWAY TERMINATIONS.

3. ELECTRICAL CONTRACTOR SHALL BE RESPONSIBLE TO MAINTAIN A 3 % VOLTAGE DROP FROM THE DEVICE TO THE BRANCH PANEL BOARD, ON ALL 20 AMP, 120 VOLT THEATER LIGHTING DEVICES. CONDUCTOR SIZES SHALL BE BASED ON ACTUAL INSTALLED CONDUCTOR LENGTHS AS FOLLOWS;
   - 0 – 50 FEET SHALL USE #12 AWG CONDUCTORS
   - 51 – 75 FEET SHALL USE #11 AWG CONDUCTORS
   - 76 – 125 FEET SHALL USE #8 AWG CONDUCTORS
   - 126 – 200 FEET SHALL USE #6 AWG CONDUCTORS
   - 201 – 300 FEET SHALL USE #4 AWG CONDUCTORS
   - 301 – 400 FEET SHALL USE #3 AWG CONDUCTORS

4. COORDINATE PLACEMENT OF BOXES: 27,28,29,30,31,32,33,34, 35,36,37 WITH ARCHITECTURAL ELEVATIONS AND SOUND CONTRACTOR.

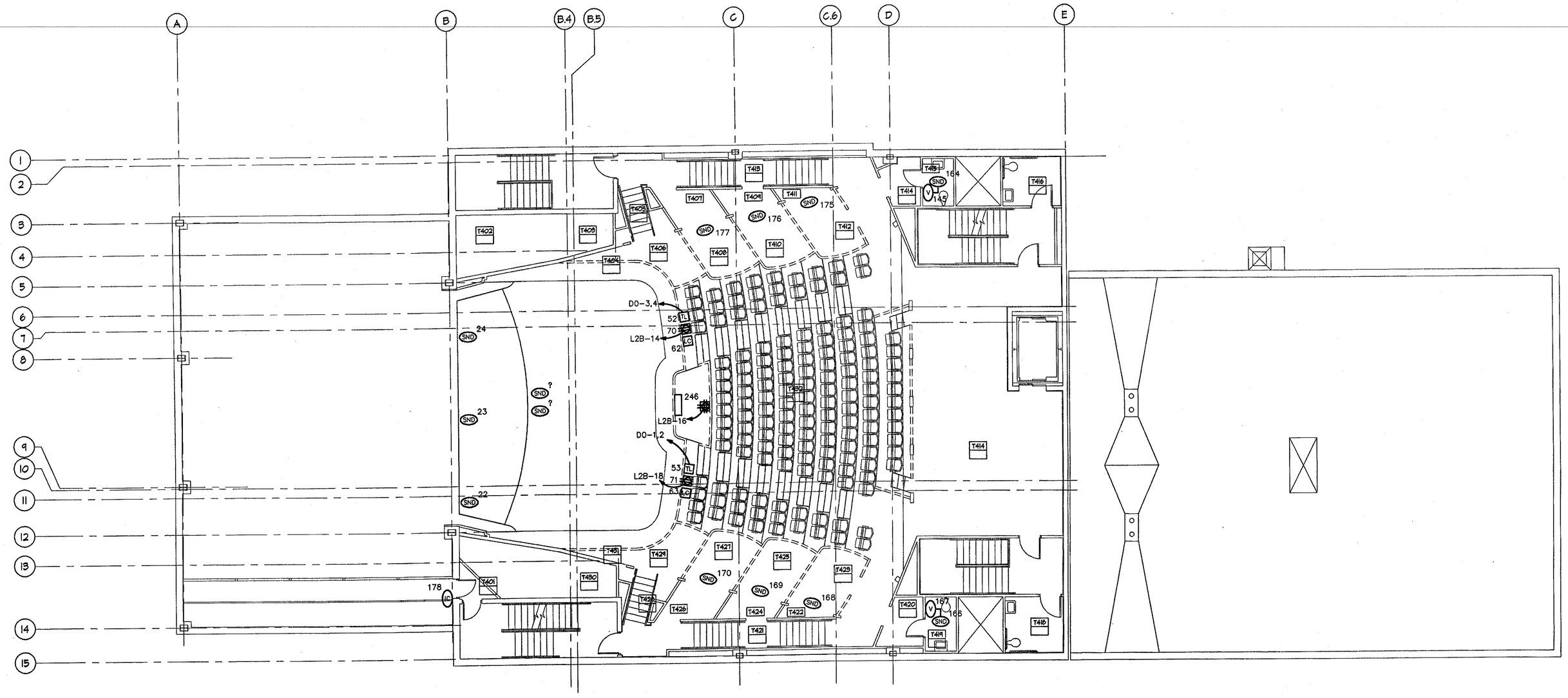

A FOURTH FLOOR PLAN

1/8"=1'-0"

N

STATE OF OHIO
GERALD A. PETRIC
E-40996
REGISTERED PROFESSIONAL ENGINEER

KORDA/NEMETH ENGINEERING, INC.
1650 WATERMARK DRIVE
COLUMBUS, OHIO 43215
DESIGNED BY Robert F. Gardner
DRAWN BY Tara K. Theado
CHECKED BY
KNE JOB # 2000-0110

PASTIME THEATRE

PERFORMING ARTS CENTER
538 Main Street Coshocton, Ohio

HRJL
HARDEN • REID • JAMES • LUCHTENBERG

DRAWN BY
CHECKED BY
COMMISSION NO. 2000065
DATE JANUARY 17, 2001
REVISIONS

E4.4

OF SHEETS

©COPYRIGHT 2000
HARDEN, REID, JAMES & LUCHTENBERG ARCHITECTS, INC.
THESE DOCUMENTS HAVE BEEN PREPARED SPECIFICALLY FOR THE USE OF THIS PROJECT. THEY ARE NOT SUITABLE FOR USE ON OTHER PROJECTS OR IN OTHER LOCATIONS WITHOUT THE APPROVAL AND PARTICIPATION OF THE ARCHITECT. REPRODUCTION IS PROHIBITED.

GENERAL NOTES

1. NOT ALL CONDUITS ARE SHOWN. REFER TO SCHEDULES IN THEATER CONSULTANTS PACKAGE FOR ADDITIONAL CONDUIT AND CONDUIT ROUTING REQUIREMENTS.
2. ALL RACEWAYS FOR THEATER LIGHTING SYSTEMS AND SOUND/INTERCOM SYSTEMS SHALL BE PERMANENTLY IDENTIFIED AS THEATER LIGHTING SYSTEM (TL) OR SOUND SYSTEM (SD) AND SHALL BE IDENTIFIED USING AND IDENTIFICATION SYSTEM TO CLEARLY IDENTIFY LOCATION OF RACEWAY TERMINATIONS.
3. ELECTRICAL CONTRACTOR SHALL BE RESPONSIBLE TO MAINTAIN A 3 % VOLTAGE DROP FROM THE DEVICE TO THE BRANCH PANEL BOARD, ON ALL 20 AMP, 120 VOLT THEATER LIGHTING DEVICES. CONDUCTOR SIZES SHALL BE BASED ON ACTUAL INSTALLED CONDUCTOR LENGTHS AS FOLLOWS:
   - 0 – 50 FEET SHALL USE #12 AWG CONDUCTORS
   - 51 – 75 FEET SHALL USE #11 AWG CONDUCTORS
   - 76 – 125 FEET SHALL USE #8 AWG CONDUCTORS
   - 126 – 200 FEET SHALL USE #6 AWG CONDUCTORS
   - 201 – 300 FEET SHALL USE #4 AWG CONDUCTORS
   - 301 – 400 FEET SHALL USE #3 AWG CONDUCTORS
4. COORDINATE PLACEMENT OF BOXES: 27,28,29,30,31,32,33,34, 35,36,37 WITH ARCHITECTURAL ELEVATIONS AND SOUND CONTRACTOR.

CODED NOTES

1. FLUSH MOUNTED JUNCTION BOX WITH WITH SEAL-TIGHT FLEX CONDUIT CONNECTION TO PROJECTOR (60 AMP, 208 V, 3 ø, 4 W).
2. 1 – 1-1/4" SEAL-TIGHT FLEXIBLE CONDUIT FOR FINAL CONNECTION TO PROJECTORS.
3. 2 – 1/2" SEAL-TIGHT FLEXIBLE CONDUITS FOR FINAL AUDIO CONNECTION TO PROJECTOR.
4. VERIFY EXACT REQUIREMENTS AND LOCATION WITH MOVIE PROJECTION VENDOR AND THEATRICAL CONSULTANT PRIOR TO ROUGH-IN.

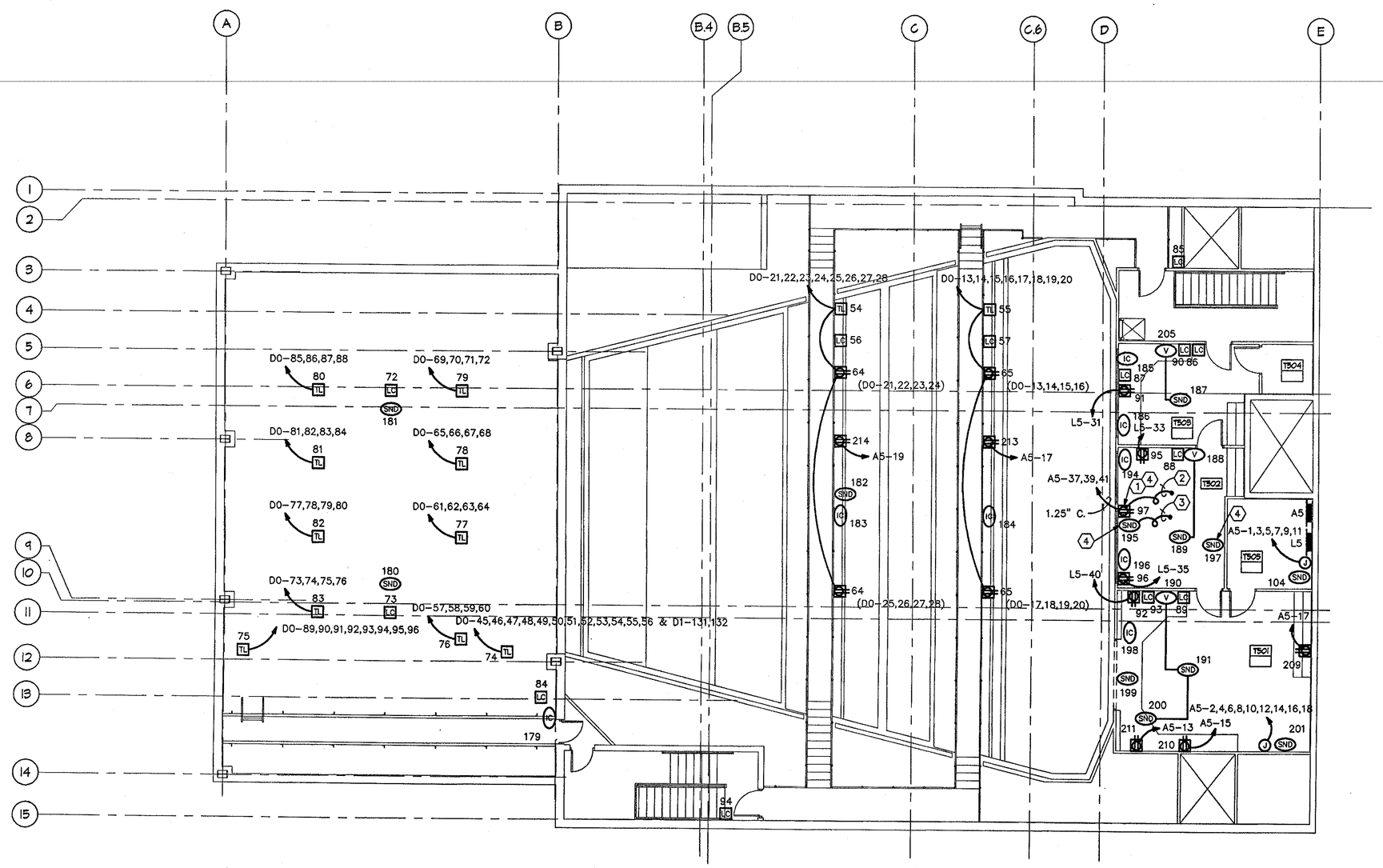

A FIFTH FLOOR PLAN

1/8"=1'-0"

N

STATE OF OHIO
GERALD A. PETRIC
E-40996
REGISTERED PROFESSIONAL ENGINEER

KORDA/NEMETH ENGINEERING, INC.
1650 WATERMARK DRIVE
COLUMBUS, OHIO 43215
DESIGNED BY Robert F. Gardner
DRAWN BY Tara K. Theado
CHECKED BY
KNE JOB # 2000-0110

PASTIME THEATRE

PERFORMING ARTS CENTER
538 Main Street Coshocton, Ohio

HRJL

DRAWN BY
CHECKED BY
COMMISSION NO. 2000065
DATE JANUARY 11, 2001
REVISIONS

E4.5

OF SHEETS

© COPYRIGHT 2000
HARDEN, REID, JAMES & LUCHTENBERG ARCHITECTS, INC.

THESE DOCUMENTS HAVE BEEN PREPARED SPECIFICALLY FOR THE UNLESS PURCHASED, THEY ARE NOT SUITABLE FOR USE ON OTHER PROJECTS OR IN OTHER LOCATIONS WITHOUT THE EXPRESS AND PARTICIPATION OF THE ARCHITECT. REPRODUCTION IS PROHIBITED.

SYMBOLS LIST FOR PLANS

1. SOME SYMBOLS MAY NOT BE USED.
2. MOUNTING HEIGHTS ARE TO TOP.

SYMBOL	DESCRIPTION	MOUNTING HEIGHT UNLESS NOTED OTHERWISE
a		
R1 R1	FLUORESCENT LIGHTING FIXTURE: TYPE "R1"; SEE LIGHTING FIXTURE SCHEDULE; WIRED TO SWITCH "a".	-----
T4 T4	TRACK LIGHTING FIXTURE: TYPE "T4"; SEE LIGHTING FIXTURE SCHEDULE; QUANTITY OF HEADS AS SHOWN	-----
R2 W2 W2	CEILING OR WALL MOUNTED LIGHTING FIXTURE TYPE "R2", "W2"; SEE LIGHTING FIXTURE SCHEDULE	SEE DRAWINGS
	CEILING RECESSED WALL WASH LIGHTING FIXTURE	-----
X1 X1	EXIT SIGN FIXTURE (WITH DIRECTIONAL ARROWS AS SHOWN) (TYPE AND MOUNTING AS NOTED; SEE LIGHTING FIXTURE SCHEDULE) SHADED AREA DENOTES FACE	94"
NL NL	LIGHTING FIXTURE ON EMERGENCY POWER; "NL" DENOTES NIGHT LIGHT	-----
W1 C1	EMERGENCY LIGHTING BATTERY PACK W/INTEGRAL HEADS (TYPE AND MOUNTING AS NOTED; SEE LIGHTING FIXTURE SCHEDULE)	94"
W	EMERGENCY LIGHTING REMOTE HEAD	-----
S a	SINGLE POLE SWITCH; a = SWITCH "a"	48"
S 2;3;4;K;P;T	SPECIAL SWITCH: 2-POLE; 3-WAY; 4-WAY; KEY OPERATED; SWITCH WITH PILOT LIGHT; TIMER SWITCH	48"
	ISOLATED GROUNDING RECEPTACLE; QUADRUPLEX RECEPTACLE - ONE ISOLATED GROUND, ONE NORMAL RECEPTACLE	20"
A	DUPLEX RECEPTACLE; SUBSCRIPT "A" DESIGNATES DUPLEX RECEPTACLE FOR AUDIO SYSTEM.	20"
	QUADRUPLEX (DOUBLE DUPLEX) RECEPTACLE	20"
WP	DUPLEX RECEPTACLE, WEATHERPROOF AND GROUND FAULT INTERRUPTER	20"
GF	DUPLEX RECEPTACLE, GROUND FAULT INTERRUPTER	48"
6-30R	SPECIAL PURPOSE RECEPTACLE (TYPE AS NOTED OR IN SPECIFICATIONS)	SEE DRAWINGS
F	DUPLEX RECEPTACLE, FLOOR MOUNTED	-----
A B	POKE-THRU RECEPTACLE; "A" DENOTES FURNITURE POWER CONNECTION; "B" DENOTES FURNITURE VOICE/DATA CONNECTION (SEE SPECIFICATIONS)	-----
	POWER POLE	-----
F	VOICE/DATA OUTLET, WALL MOUNTED; FLOOR MOUNTED	20"
F	GANGED FLOOR MOUNTED DUPLEX RECEPTACLE AND VOICE/DATA OUTLET	-----
J	SINGLE SERVICE PRE-WIRED MULTIPLE OUTLET RACEWAY	SEE DRAWINGS
J F	JUNCTION BOX, CEILING OR WALL MOUNTED; FLOOR MOUNTED	SEE DRAWINGS
M	MOTOR (BY DIVISION 1-15)	-----
1/25/3 3R	MAGNETIC MOTOR STARTER (STARTER SIZE , FUSE SIZE, NO. OF POLES -AS NOTED) "3R" DENOTES NEMA "3R" ENCLOSURE	60"
M	MANUAL MOTOR STARTER	60"
60/45/3 3R, NF	SAFETY SWITCH (SWITCH SIZE, FUSE SIZE, NO. OF POLES -AS NOTED) "3R" DENOTES NEMA "3R" ENCLOSURE, "NF" DENOTES NONFUSED	60"
1/25/3 3R	COMBINATION MOTOR STARTER (STARTER SIZE, FUSE SIZE, NO. OF POLES -AS NOTED) "3R" DENOTES NEMA "3R" ENCLOSURE	60"
	PUSHBUTTON STATION	48"
C	CONTROL DEVICE AS NOTED: (C =CONTACTOR)	SEE DRAWINGS
CP	CONTROL PANEL	SEE DRAWINGS
D 1200	DIMMER (1200 WATT)	48"
VFD	VARIABLE FREQUENCY DRIVE	SEE DRAWINGS
	VOICE/DATA TERMINAL BOARD	60"
P1 P1	PANELBOARD: SURFACE MOUNTED, FLUSH MOUNTED PANEL DESIGNATION AS SHOWN	72"
	DISTRIBUTION PANELBOARD	72"
	CONDUIT, RISER UP	-----
	CONDUIT, RISER DOWN	-----
	CONDUIT ROUTED UNDER FLOORSPACE OR UNDERGROUND	-----
	FLEXIBLE METAL CONDUIT OR LIQUID-TIGHT FLEXIBLE METAL CONDUIT	-----
T1	TRANSFORMER: (TYPE AS NOTED OR IN TRANSFORMER SCHEDULE)	SEE DRAWINGS
K	FIRE ALARM MANUAL PULL STATION; K, KEY OPERATED TYPE	48"
	FIRE ALARM AUDIBLE DEVICE	80"
	FIRE ALARM VISUAL DEVICE	80"
	COMBINATION FIRE ALARM AUDIBLE AND VISUAL DEVICE	80"
S H	CEILING MOUNTED FIRE ALARM SMOKE DETECTOR; HEAT DETECTOR	-----
S	DUCT MOUNTED FIRE ALARM SMOKE DETECTOR	-----
DH	FIRE ALARM MAGNETIC DOOR HOLDER WITH INTEGRAL SMOKE DETECTOR	72"
FC F	FIRE ALARM FIREMAN'S INTERCOM STATION	54"
T	FIRE ALARM TAMPER SWITCH	-----
FL	FIRE ALARM FLOW SWITCH	-----
P	SECURITY SYSTEM FUTURE DOOR POSITION SWITCH	-----
HB	JUNCTION BOX FOR HANDICAP DOOR OPENER PUSHBUTTON	48"
	BUZZER	94"

SYMBOLS LIST NOTES:

1. STRAIGHT LINES BETWEEN DEVICES INDICATE SWITCHED CIRCUIT.
2. STRAIGHT LINES BETWEEN DEVICES ON LIGHTING PLANS INDICATE SWITCHED CIRCUIT. ALL LIGHTING FIXTURES IN A ROOM OR CORRIDOR SHALL BE CONTROLLED VIA SWITCHES AND/OR OCCUPANCY SENSORS SHOWN UNLESS NOTED OTHERWISE.
3. SOLID SYMBOLS WITH SUBSCRIPT "R" INDICATE EXISTING DEVICES TO REMAIN. SOLID SYMBOLS WITH SUBSCRIPT "RD" INDICATE RELOCATED DEVICES.
4. DASHED SYMBOLS INDICATE EXISTING DEVICES TO BE REMOVED. DASHED SYMBOLS WITH SUBSCRIPT "REL" INDICATE EXISTING DEVICES TO BE RELOCATED.

LIGHTING FIXTURE SCHEDULE

NOTES: FIXTURE NUMBER, LETTER PREFIX INDICATES TYPE OF MOUNTING AS FOLLOWS
C-CEILING MOUNTED; S-SUSPENDED; W-WALL MOUNTED; R-CEILING RECESSED; WR-WALL RECESSED;
CV-COVE MOUNTED; U-UNDERCABINET; P-POST; G-GROUND MOUNTED; X-UNIVERSAL MOUNTED; T-TRACK
PARTIAL MODEL NUMBERS MAY BE SHOWN AND ARE INTENDED TO INDICATE ACCEPTABLE MANUFACTURER'S PRODUCT LINE. EXACT MODEL NUMBERS MEETING THE FIXTURE DESCRIPTION SHALL BE OBTAINED FROM MANUFACTURER'S AGENTS. ALL FIXTURES MAY NOT BE USED/REFER TO PLANS.
DIMENSIONS MAY VARY.
REFER TO SPECIFICATIONS SECTION 16500 FOR ADDITIONAL REQUIREMENTS.

FIXTURE NUMBER	FIXTURE DESCRIPTION	FIXTURE VOLTAGE	LAMP TYPE	APPROVED MANUFACTURERS
S1	24" DIA 8" DEEP 4 LAMP DIRECT/INDIRECT FIXTURE STEM MOUNTED FIXTURE WITH ACRYLIC OR LUMINOUS WHITE DROPPED DIFFUSER, POLISHED BRASS TRIM RING, SINGLE CHROME PENDANT WITH THREE CHROME SUPPORT ARMS AND BRASS "LEAF" ORNAMENTATION.	120	FT39 DL/835	ORIGINAL CAST LIGHTING CLB SERIES
S1B	SAME AS S1 EXCEPT WITH INCANDESCENT LAMPS	120	60 WATT A	ORIGINAL CAST LIGHTING CLB SERIES
C2	18" DIA 8" DEEP 2 LAMP FIXTURE,CEILING MOUNTED FIXTURE WITH ACRYLIC OR LUMINOUS WHITE DROPPED DIFFUSER, HIGHLY SPECULAR METAL REFLECTOR, POLISHED BRASS TRIM RING,	120	(2) 26 WATT 835	ORIGINAL CAST LIGHTING CLF SERIES VISA TREND SP1 ADVENT
C2a	SAME AS S2 EXCEPT 24" WITH 4 LAMPS		(4) 26 WATT	
R3	8" DIA, 12" DEEP, 150W, CEILING RECESSED INCANDESCENT DOWNLIGHT, WHITE TRIM RING, SPECULAR CLEAR ALZAK REFLECTOR, BAR HANGERS, PREWIRED HOUSING, DAMP LOCATION UL LISTING.	120	150A21	OMEGA EY 4000 SERIES INDY LITHONIA VANTAGE HALO KURT VERSEN
R3A	SAME AS R3 EXCEPT WITH 15 DEGREE SLOPED CEILING ADAPTOR			
R3B	SAME AS R3 EXCEPT WITH 100 WATT LAMP			
R3D	SAME AS R3 EXCEPT WITH 40 WATT LAMP			
R5	2'x 4' 4 LAMP CEILING RECESSED FLUORESCENT STATIC GRID TROFFER WITH 4.5" DEEP WHITE BAKED ENAMEL STEEL HOUSING,MINIMUM .125" PRISMATIC ACRYLIC LENS, MITERED CORNER REGRESSED ALUMINUM DOOR FRAME, SPRING LOADED OR CAM LATCHES, GRID CLIPS.	277	FO32/735	DAYBRITE 2DG SERIES WILLIAMS LITHONIA METALUX COLUMBIA
R5A	SAME AS R5 EXCEPT WITH 2 LAMPS.			
R5B	SAME AS R5 EXCEPT WITH 3 LAMPS.			
R6	2'x 2' 2 LAMP CEILING RECESSED FLUORESCENT STATIC GRID TROFFER WITH 4.5" DEEP WHITE BAKED ENAMEL STEEL HOUSING,MINIMUM .125" PRISMATIC ACRYLIC LENS, MITERED CORNER REGRESSED ALUMINUM DOOR FRAME, SPRING LOADED OR CAM LATCHES, GRID CLIPS. (1 5/8" U)	277	FB031/735	DAYBRITE 2DG SERIES WILLIAMS LITHONIA METALUX COLUMBIA
R6A	SAME AS R6 EXCEPT 3 LAMP			
R7	4" DIA, 9" DEEP, RECESSED INCANDESCENT, LOW VOLTAGE DOWNLIGHT WITH INTEGRAL TRANSFORMER, WHITE TRIM RING, CLEAR SPECULAR ALZAK REFLECTOR, TEMPERED GLASS LAMP GUARD, PREWIRED HOUSING, BAR HANGERS, DAMP LOCATION UL LISTING.	120	35MR16/0/1	LITHONIA DLV SERIES INDY CAPRI PRESCOLITE HALO RSA
TR8	4" DIA, 10" DEEP, 75W RATED , CEILING MOUNTED, INCANDESCENT, ROUND BACK, LINE VOLTAGE TRACK FIXTURE WITH INTEGRAL TRANSFORMER, WHITE FINISH. WHITE BAFFLE, WHITE TRACK, STEM MOUNTED, VERIFY MOUNTING HEIGHT WITH ARCHITECT IN FIELD.	120	60/PAR16/1	LITHONIA RND SERIES CAPRI RSA PRESCOLITE HALO INDI
TR8A	SAME AS TR8 EXCEPT WITH RECESSED TRACK			
R9	2'x 4' 3 LAMP CEILING RECESSED FLUORESCENT STATIC GRID PARABOLIC TROFFER WITH 6" DEEP WHITE BAKED ENAMEL STEEL HOUSING, 3" DEEP SPECULAR ALUMINUM 18 CELL LOUVER, SPRING LOADED CAM LATCHES, GRID CLIPS.	277	FO32/735	DAYBRITE 2P3G SERIES WILLIAMS LITHONIA METALUX COLUMBIA
R9A	SAME AS R9 EXCEPT A 2 LAMP FIXTURE			
R10	6" DIA, 15" DEEP, CEILING RECESSED INCANDESCENT DOWNLIGHT, WHITE TRIM RING, SPECULAR CLEAR ALZAK REFLECTOR, BAR HANGERS, PREWIRED HOUSING, DAMP LOCATION UL LISTING.	120	60/HIR/PAR38 40 DEGREE FLOOD	OMEGA C3512 SERIES INDY LITHONIA PRESCOLITE HALO VANTAGE
S11	14" x 7' x 50", 2 LAMP,CHAIN SUSPENDED FLUORESCENT INDUSTRIAL FIXTURE, WHITE BAKED ENAMEL STEEL HOUSING AND REFLECTOR, 20% UPLIGHT SLOTS, TURRET TYPE LAMP HOLDERS. MOUNT FIXTURE 8'-0" A.F.F. UNLESS NOTED OTHERWISE.	277	FO32/735	WILLIAMS 82 SERIES LITHONIA DAYBRITE COLUMBIA METALUX
S11a	SAME AS S11 EXCEPT WITH WIRE GUARD.			
C11	SAME AS S11 EXCEPT CEILING MOUNTED.			
R12	8" DIA, 8" DEEP, 2 LAMP, CEILING RECESSED FLUORESCENT DOWNLIGHT, CLEAR SPECULAR ALZAK IRIDESCENCE-FREE REFLECTOR, BAR HANGERS, PREWIRED HOUSING, DAMP LOCATION UL LISTING.	277	CF26DD/835	OMEGA INDY LITHONIA PRESCOLITE HALO VANTAGE
R12A	SAME AS R12 EXCEPT 0 DEGREE STARTING TEMPERATURE			
WR13	7" DIA. x 5", WALL RECESSED, 1 LAMP, FLUORESCENT STEP LIGHT, TRANSLUCENT TEMPERED GLASS LENS, CAST CAST ALUMINUM HOUSING WITH STANDARD FINISH BY ARCHITECT EYELID TYPE SHIELD.	120	CF9DS/835	BEGA 2901 SERIES VISTA DEVINE PRESCOLITE ALL
W15	10" H x7" W x8" DEEP INCANDESCENT WALL SCONCE WITH BRASS BRACKET ARM, 7" DIA. FLUTED OPALESCENT BOWL TYPE DIFFUSER AND POLISHED NICKEL DIFFUSER SUPPORT.	120	60A19	REJUVENATION LAFAYETTE W466 OR EQUAL
G16	PROVIDE LED LIGHTING SYSTEM WHERE NOTED ON DRAWINGS. SYSTEM SHALL HAVE A CLEAR LENS COVER, 12" LAMP SPACING, EXTRUDED RIGID VINYL HOUSING. COORDINATE EXACT LENGTHS, COLOR AND HOUSING TYPE WITH ARCHITECTURAL DRAWINGS. DO NOT EXCEED 80' WITH A SINGLE FEED POINT. USE MANUFACTURED WIREWAY FOR MULTIPLE POWER FEEDS. PROVIDE ETL CLASS II LISTED DC TRANSFORMERS, SIZED AS REQUIRED, AND SERIES D10	120 (LINE)	W/FIXTURE	TIVOLI LEM SERIES EQUALS BY: STARFIRE BELFER
G16A	VARIABLE AUTOTRANSFORMER DIMMERS, AS NOTED ON DRAWINGS FOR A COMPLETE SYSTEM. PROVIDE COMPLETE SHOP DRAWINGS SHOWING ALL COMPONENTS AND SYSTEM LAYOUT. SAME AS G16 EXCEPT CARPET TO FLOOR TRIM PLATE.	120	BY MFGR.	CELESTIAL LIGHTING SERIES 1900
G16B	SAME AS G16 EXCEPT RED LEDS 6" O.C. STEP EDGE TRIM PLATE	120	BY MFGR.	CELESTIAL LIGHTING SERIES 1900
G16C	SAME AS G16B EXCEPT AMBER LEDS	120	BY MFGR.	CELESTIAL LIGHTING SERIES 1900
W17	5" DIA, 10" HEIGHT, 150W, WALL MOUNTED, GASKETED INCANDESCENT VAPORTITE FIXTURE, CLEAR TEMPERED GLASS GLOBE, CAST ALUMINUM GUARD, WALL BOX ADAPTOR, DAMP LOCATION UL LISTING.	120	150A23	DAYBRITE IIW-SERIES CANPLAS GENERAL ELECTRIC RIG-A-LITE GUTH HUBBELL
W18	WALL MOUNTED, INCANDESCENT, 4 LAMP, CHANNEL LIGHTING SYSTEM WITH EXTRUDED ALUMINUM HOUSING, SATIN ALUMINUM FINISH, WITH NEMA 5-20R DUPLEX RECEPTACLE MOUNTED AT BASE OF CHANNEL ABOVE COUNTER & WIRED TO SEPARATE CKT. LAMP HOLDERS SHALL BE SPACED 8" O.C. PROVIDE CHROME PLATED WIRE GUARDS FOR EACH LAMP. ALUMINUM OR NON-METALLIC GUARDS ARE NOT ACCEPTABLE. SEE ELEVATIONS.	120	A40/W/RP	NORBERT BELFER 2502 SERIES EQUAL BY: CELESTIAL LIGHTING SENTINEL LITELAB
W18a	SAME AS W18 EXCEPT 2 LAMP, AND RECEPTACLE SHALL HAVE GROUND FAULT CIRCUIT INTERRUPTER AND LAMP HOLDER SHALL BE PLACED 12" O.C.	120	A40/W/RP	NORBERT BELFER 2502SERIES EQUAL BY: CELESTIAL LIGHTING SENTINEL LITELAB
W18b	SAME AS W18a EXCEPT WITHOUT RECEPTACLE.			
W18c	WALL MOUNTED, INCANDESCENT, 7 LAMP, CHANNEL LIGHTING SYSTEM WITH EXTRUDED ALUMINUM HOUSING, SATIN ALUMINUM FINISH, AND TEE CONNECTORS. LAMP HOLDERS SHALL BE SPACED 12" O.C. PROVIDE CHROME PLATED WIRE GUARDS FOR EACH LAMP. ALUMINUM OR NON-METALLIC GUARDS ARE NOT ACCEPTABLE. SEE ELEVATIONS.	120	A40/W/RP	NORBERT BELFER 2502 SERIES EQUAL BY: CELESTIAL LIGHTING SENTINEL LITELAB

LIGHTING FIXTURE SCHEDULE

NOTES: FIXTURE NUMBER, LETTER PREFIX INDICATES TYPE OF MOUNTING AS FOLLOWS
C-CEILING MOUNTED; S-SUSPENDED; W-WALL MOUNTED; R-CEILING RECESSED; WR-WALL RECESSED;
CV-COVE MOUNTED; U-UNDERCABINET; P-POST; G-GROUND MOUNTED; X-UNIVERSAL MOUNTED; T-TRACK
PARTIAL MODEL NUMBERS MAY BE SHOWN AND ARE INTENDED TO INDICATE ACCEPTABLE MANUFACTURER'S PRODUCT LINE. EXACT MODEL NUMBERS MEETING THE FIXTURE DESCRIPTION SHALL BE OBTAINED FROM MANUFACTURER'S AGENTS. ALL FIXTURES MAY NOT BE USED/REFER TO PLANS,
DIMENSIONS MAY VARY.
REFER TO SPECIFICATIONS SECTION 16500 FOR ADDITIONAL REQUIREMENTS.

FIXTURE NUMBER	FIXTURE DESCRIPTION	FIXTURE VOLTAGE	LAMP TYPE	APPROVED MANUFACTURERS
R19	7" DIA, 6" DEEP, 2 LAMP RECESSED, FLUORESCENT SHOWER LIGHT, FLUSH PRISMATIC LENS, WET LOCATION LISTING, PREWIRE HOUSING, BAR HANGERS	277	CF26 DD/835	LITHONIA LF62/26DTT/F6LF2PF CAPRI INFINITI HALO
R20	2'x 4' 2 LAMP CEILING RECESSED FLUORESCENT STATIC GRID PARABOLIC TROFFER WITH 6" DEEP WHITE BAKED ENAMEL STEEL HOUSING, 3" DEEP SPECULAR ALUMINUM 12 CELL LOUVER, SPRING LOADED CAM LATCHES, GRID CLIPS.	277	FO32/735	DAYBRITE 2P3G SERIES WILLIAMS LITHONIA METALUX COLUMBIA
X21	12" x 8" x 2" , UNIVERSAL CANOPY MOUNT,SINGLE FACE L.E.D. EXIT SIGN, BLACK CAST ALUMINUM HOUSING, LACQUERED BRUSHED ALUMINUM ,STENCIL FACE, RED LETTERS, DIRECTIONAL ARROWS, 90 MIN SEALED UNIT POWER SUPPLY, MAINTENANCE FREE NICKEL CADMIUM ,WITH SWITCH AND L.E.D..	120/277	W/FIXTURE	DYNARAY 92 LED SERIES McPHILBEN LITHONIA SURE-LITES HUBBELL PATHWAY
X21A	SAME AS X21 EXCEPT WITH BATTERY TO POWER EXTRA 1-9 WATT REMOTE			
X21B	SAME AS X21 EXCEPT WITH DOUBLE FACE			
X22	12" x 8" x 4" 2 LAMP, 6V, WALL MOUNTED EMERGENCY EGRESS FIXTURE, ADJUSTABLE HIGH IMPACT THERMOPLASTIC LOW PROFILE ROUND 12 WATT HALOGEN HEADS, WHITE COLORED THERMOPLASTIC HOUSING, SWITCH AND LED. 90 MIN SEALED UNIT POWER SUPPLY.	120/277	W/FIXTURE	LITHONIA 6ELM2 SERIES CHLORIDE HUBBELL SURE-LITES PRESCOLITE
W23	13" DIA, WALL MOUNTED, 1 LAMP FLUORESCENT QUARTER SPHERE SCONCE, TRANSLUCENT WHITE POLYCARBONATE DIFFUSER, WHITE TRIM.	277	CF13DS/835	NULITE ADA 32 EXCELITE VISA TREND
W24	18" DIA 9" DEEP 2 LAMP QUARTER SPHERE WALL SCONCE, ROLL FORMED 2 PIECE HOUSING AND ACRYLIC OR LUMINOUS WHITE DIFFUSER, WHITE PAINTED REFLECTOR, POLISHED BRASS TRIM TO MATCH FIXTURE TYPE S1,	120	(2) 13 WATT 815	ORIGINAL CAST LIGHTING CLSV SERIES VISA TREND
W24A	SAME AS W24 EXCEPT INCANDESCENT	120	2-60 WATT A19	
W25	3" DIAMETER, QUARTZ HALOGEN FLOOD LIGHT WITH DIECAST COPPER-FREE ALUMINUM HOUSING, TEMPERED, CROWNED LENSES, TAPERED LOCKING SWIVEL, CHROMATE WASHED. INTERNAL 120/12 VOLT TRANSFORMER. WET LOCATION UL LISTING.	120	Q20MR16/C/ 7 DEG/E2X	HYDREL 4620A EQUALS BY: BK LIGHTING NORBERT BELFER HUBBELL LUMIERE
X26	24" x 12" 2 LAMP, 12V, CEILING RECESSED EMERGENCY EGRESS FIXTURE, ADJUSTABLE STEEL SMALL ROUND 8 WATT HEADS, FROSTED ACRYLIC LENS, WHITE 18 GAUGE STEEL HOUSING, SWITCH AND LED. 90 MIN SEALED UNIT POWER SUPPLY.	120/277	W/FIXTURE	DYNARAY 72216-12W SERIES CHLORIDE HUBBELL SURE-LITES LITHONIA
WR27	RECESSED, WALL RECESSED MOUNTED, INCANDESCENT, MULTI-LAMP, CHANNEL LIGHTING SYSTEM WITH EXTRUDED ALUMINUM HOUSING, SATIN ALUMINUM FINISH, AND TEE CONNECTORS. LAMP HOLDERS SHALL BE SPACED 12" O.C. DAMP LOCATION UL LISTING.	120V	150S14/GR/CL 130 VOLT	NORBERT BELFER 2504 SERIES EQUAL BY: CELESTIAL LIGHTING SENTINEL LITELAB
C27	SAME AS WR27 EXCEPT CEILING MOUNTED WITH LAMPS SPACED 6" O.C.			
S29	3' x 4' x 48" 1 LAMP, CEILING MOUNTED FLUORESCENT STRIP FIXTURE, WHITE BAKED ENAMEL STEEL HOUSING.	277	FO32/735	DAYBRITE N SERIES WILLIAMS LITHONIA METALUX COLUMBIA
W30	9" x 48" x 9" DEEP, 2 LAMP, SURFACE MOUNTED FLUORESCENT WALL BRACKET WITH .125" MIN. PRISMATIC ACRYLIC LENS, UP/DOWN LIGHT, BAKED WHITE ENAMEL STEEL HOUSING,	277	FO32/735	FAIL SAFE VERSA-TECH NULITE LITHONIA
X31	15" x 10" x 2" 2 LAMP, UNIVERSAL CANOPY MOUNT, SINGLE FACE FLUORESCENT EDGE LIGHT EXIT SIGN, WITH MOLDED CLEAR ACRYLIC SIGN PANEL, RED LETTERS, DIRECTIONAL ARROWS. 90 MIN SEALED UNIT POWER SUPPLY, MAINTENANCE FREE NICKEL CALCIUM ,WITH SWITCH AND LED.	120/277	W/FIXTURE	ALKCO RGLO SERIES CHLORIDE HUBBEL LITHONIA SURE-LITES
X31a	SAME AS X31 EXCEPT DOUBLE FACE.			
W33	6" FRESNEL INCANDESCENT ADJUSTABLE SPOT/FLOOD LIGHT WITH EXTRUDED ALUMINUM BODY, VENTED LENS DOOR, WHITBARN DOORS, BLACK FINISH, MOUNTING YOKE, C-CLAMP, SAFETY CABLE AND HIGH HAT OPTION	120	1000 WATT	STRAND 12081 SERIES ALTMAN
W33A	SAME AS W33 EXCEPT 750 WATT LAMP	120	750 WATT	
X34	1 LAMP, 12V, WALL MOUNTED REMOTE EMERGENCY EGRESS LIGHTING HEAD, ADJUSTABLE WHITE THERMOPLASTIC 12 WATT SEALED BEAM HEAD, MOUNTING PLATE AND SWIVEL. DAMP LOCATION UL LISTING		W/ FIXTURE	CHLORIDE WTT SERIES HUBBELL RE SERIES LITHONIA ELA SSB SERIES PRESCOLITE ELHN0612 SERIES SURE-LITES 12X-12 SERIES
W35	17" x 16" x 8", WALL MOUNTED METAL HALIDE WALL PACK, ALUMINUM REFLECTOR, WIDE DISTRIBUTION, GASKETED POLYCARBONATE REFRACTOR, DARK BRONZE POLYCARBONATE HOUSING, WET LOCATION UL LISTING.	277 MED	MXR100/C/U	LITHONIA TWP SERIES DAYBRITE GENERAL ELECTRIC LUMARK HUBBELL
X36	10" x 8" x 4", 2 LAMP, 12V, WALL MOUNTED EMERGENCY EGRESS FIXTURE, ADJUSTABLE ROUND 12 WATT SEALED BEAM HEADS, WHITE 20 GAUGE STEEL HOUSING, SWITCH AND LED. 90 MIN SEALED UNIT POWER SUPPLY.		W/FIXTURE	LITHONIA ELT SERIES CHLORIDE HUBBELL PRESCOLITE SURE-LITES
R37	KURT VERSON CAM, 5 DEGREE SLOPED CEILING ADAPTER	120	250 PAR 38 30 DEGREE	KURT VERSON CAM SERIES LITHONIA OMEGA
R37A	SAME AS R37 EXCEPT 10 DEGREE SLOPED CEILING ADAPTER, AIMING TOWARDS STAGE.			
C38	6" DIA, 13" DEEP, 150W, CEILING MOUNTED INCANDESCENT DOWNLIGHT CYLINDER, SEAMLESS BLACK ENAMEL SPUN ALUMINUM HOUSING, CLEAR SPECULAR ALZAK REFLECTOR, DAMP LOCATION UL LISTING.	120	100HIR/PAR38	CAPRI CMC SERIES LITHONIA C SERIES HALO SERIES INFINITI SERIES
W40	5" DIA, 100W, OVERHEAD PULL DOWN, INCANDESCENT DOCK LIGHT FACTORY PRE-WIRED, 25' CORD WITH TWIST LOCK PLUG, 42" STEEL TUBE ARMS WITH 180 DEGREE HORIZONTAL MOVEMENT, BLACK PAINTED ALUMINUM HEAD WITH TOGGLE SWITCH, DAMP LOCATION UL LISTING.	120	100PAR/HIR /FL	PHOENIX UL-SBR SERIES EQUALS BY: TRILITE GUTH FOSTORIA RIG-A-LITE
W41	9" DIAMETER x 10 H x 11" DEEP, 1 LAMP INCANDESCENT "GAS" STYLE WALL BRACKET, BRASS FINISH WITH ORNAMENTAL GAS KEY ON BRACKET ARM, 8" DIAMETER ETCHED IRREDESCENT GLASS SHADE WITH RUFFLED LIP.	120	40 WATT CA	REJUVENATION LAMP, OREGON CITY #W259 WITH 3161 SHADE EQUALS BY: HIGHLITES H9131B-01 SERIES
C42	24" DIA 8" DEEP 4 LAMP FIXTURE CEILING MOUNTED FIXTURE WITH ACRYLIC OR LUMINOUS WHITE DROPPED DIFFUSER, WHITE PAINTED REFLECTOR POLISHED BRASS TRIM RING, SIMILAR TO FIXTURE S1, LESS LEAF ORNAMENTATION.	120	(4) 26 WATT 835	ORIGINAL CAST LIGHTING STD SERIES VISA TREND SP1 ADVENT

BRANCH CIRCUIT AUTOMATIC TRANSFER PANEL SCHEDULE

TRANSFER SWITCH NO.	AMPACITY RATING	LOAD DESCRIPTION	NORMAL CIRCUIT NO.	EMERGENCY INVERTER CIRCUIT NO.
1	20A	EM. LTG. - UNDER BALCONY	D1-3	INV-1
2	20A	EM. LTG. - ROOM T113	D1-7	INV-3
3	20A	EM. LTG. - ROOM T113	D1-19	INV-5
4	20A	EM. LTG. - COOR. T109 & T118	D1-35	INV-7
5	20A	EM. LTG. - LOUNGE T208	D4-5	INV-9
6	20A	EM. LTG. - BALCONY	D1-37	INV-11
7	20A	EM. LTG. - BALCONY FOYER T414	D1-23	INV-2
8	20A	EM. LTG. - HOUSE (CATWALK)	D1-18	INV-4
9	20A	EM. LTG. - HOUSE (CATWALK)	D1-22	INV-6
10	20A	EM. LTG. - HOUSE (CATWALK)	D1-10	INV-8
11	20A	SPARE	-	-
12	20A	SPARE	-	-

STATE OF OHIO
GERALD A. PETRIC
E-40996
REGISTERED PROFESSIONAL ENGINEER

KORDA/NEMETH ENGINEERING, INC.
1650 WATERMARK DRIVE
COLUMBUS, OHIO 43215

DESIGNED BY Robert F. Gardner
DRAWN BY Peter M. Westhoff
CHECKED BY
KNE JOB # 2000-0110

PASTIME THEATRE

PERFORMING ARTS CENTER
538 Main Street Coshocton, Ohio

HRJL ARCHITECTS
HARDEN • REID • JAMES • LICHTENBERG

DRAWN BY
CHECKED BY
COMMISSION NO. 2000068
DATE JANUARY 11, 2001
REVISIONS

E5.1

OF SHEETS

© COPYRIGHT 2000
HARDEN, REID, JAMES & LICHTENBERG
THESE DRAWINGS HAVE BEEN PREPARED SPECIFICALLY FOR THE TITLED PROJECT. THEY ARE NOT SUITABLE FOR USE ON ANY OTHER PROJECT. ALL RIGHTS RESERVED TO THE ARCHITECT. ANY REPRODUCTION OF THE ARCHITECT. REPRODUCTION IS PROHIBITED.

PASTIME THEATRE

PERFORMING ARTS CENTER

538 Main Street Coshocton, Ohio

PANEL ID: AB1

LOCATION: ELEC. RM. — MOUNTING: SURFACE — MAIN TYPE: MLO — VOLTAGE: 208 / 120 — PHASE: 3 — WIRE: 4 — MAIN SIZE: 200 AMPS

LEGEND: LO: LOCK-ON DEVICE; GF: GROUND FAULT CIRCUIT INTERRUPTER; IG: ISOLATED GROUND; SH: SHUNT TRIP — COORDINATE LUG SIZE WITH WIRE SIZE ON 1 LINE DIAGRAM.

GND SIZE	WIRE SIZE	BRANCH CIRCUIT DESCRIPTION	CIRCUIT BREAKER SIZE/TYPE	CIRCUIT NUMBER	CIRCUIT NUMBER	CIRCUIT BREAKER SIZE/TYPE	BRANCH CIRCUIT DESCRIPTION	WIRE SIZE	GND SIZE
*	*	PANEL AB2	100/3	1	2	20/1	RECEPTACLES	12	12
--	*	--	--	3	4				
--	*	--	--	5	6				
*	*	PANEL A1	100/3	7	8				
--	*	--	--	9	10				
--	*	--	--	11	12				
*	*	PANEL A5	100/3	13	14				
--	*	--	--	15	16				
--	*	--	--	17	18				
				19	20				
				21	22				
				23	24				
				25	26				
				27	28				
				29	30				
				31	32				
				33	34				
				35	36				
				37	38				
				39	40				
				41	42				

PANEL LOAD SUMMARY (ALL TOTALS INCLUDE BOTH TUBS): LIGHTING: 0.0 KVA; RECEPTACLES & MISC.: 0.7 KVA; MOTOR: 0.0 KVA; HEATING: 0.0 KVA; TOTAL: 0.7 KVA. PANEL AMP SUMMARY: 6.0 PHASE A; 0.0 PHASE B; 0.0 PHASE C

PANEL ID: AB2

LOCATION: --- — MOUNTING: SURFACE — MAIN TYPE: MLO — VOLTAGE: 208 / 120 — PHASE: 3 — WIRE: 4 — MAIN SIZE: 225 AMPS

LEGEND: LO: LOCK-ON DEVICE; GF: GROUND FAULT CIRCUIT INTERRUPTER; IG: ISOLATED GROUND; SH: SHUNT TRIP — COORDINATE LUG SIZE WITH WIRE SIZE ON 1 LINE DIAGRAM.

GND SIZE	WIRE SIZE	BRANCH CIRCUIT DESCRIPTION	CIRCUIT BREAKER SIZE/TYPE	CIRCUIT NUMBER	CIRCUIT NUMBER	CIRCUIT BREAKER SIZE/TYPE	BRANCH CIRCUIT DESCRIPTION	WIRE SIZE	GND SIZE
12	12	AMP RACK	20/1	1	2	20/1			
12	12	AMP RACK	20/1	3	4	20/1			
12	12	AMP RACK	20/1	5	6	20/1			
12	12	AMP RACK	20/1	7	8	20/1			
12	12	AMP RACK	20/1	9	10	20/1			
12	12	AMP RACK	20/1	11	12	20/1			
12	12	AMP RACK	20/1	13	14	20/1			
12	12	AMP RACK	20/1	15	16	20/1			
			20/1	17	18	20/1			
			20/1	19	20	20/1			
			20/1	21	22	20/1			
			20/1	23	24	20/1			
			20/1	25	26	20/1			
			20/1	27	28	20/1			
			20/1	29	30	20/1			
			20/1	31	32	20/1			
			20/1	33	34	20/1			
			20/1	35	36	20/1			
			20/1	37	38	20/1			
			20/1	39	40	20/1			
			20/1	41	42	20/1			

PANEL LOAD SUMMARY (ALL TOTALS INCLUDE BOTH TUBS): LIGHTING: 0.0 KVA; RECEPTACLES & MISC.: 0.0 KVA; MOTOR: 0.0 KVA; HEATING: 0.0 KVA; TOTAL: 0.0 KVA. PANEL AMP SUMMARY: 0.0 PHASE A; 0.0 PHASE B; 0.0 PHASE C

PANEL ID: A1

LOCATION: --- — MOUNTING: SURFACE — MAIN TYPE: MLO — VOLTAGE: 208 / 120 — PHASE: 3 — WIRE: 4 — MAIN SIZE: 225 AMPS

LEGEND: LO: LOCK-ON DEVICE; GF: GROUND FAULT CIRCUIT INTERRUPTER; IG: ISOLATED GROUND; SH: SHUNT TRIP — COORDINATE LUG SIZE WITH WIRE SIZE ON 1 LINE DIAGRAM.

GND SIZE	WIRE SIZE	BRANCH CIRCUIT DESCRIPTION	CIRCUIT BREAKER SIZE/TYPE	CIRCUIT NUMBER	CIRCUIT NUMBER	CIRCUIT BREAKER SIZE/TYPE	BRANCH CIRCUIT DESCRIPTION	WIRE SIZE	GND SIZE
12	12	AMP RACK	20/1	1	2	20/1	RECEPTACLES	12	12
12	12	AMP RACK	20/1	3	4	20/1			
12	12	AMP RACK	20/1	5	6	20/1			
12	12	AMP RACK	20/1	7	8	20/1			
12	12	AMP RACK	20/1	9	10	20/1			
12	12	AMP RACK	20/1	11	12	20/1			
			20/1	13	14	20/1			
			20/1	15	16	20/1			
			20/1	17	18	20/1			
			20/1	19	20	20/1			
			20/1	21	22	20/1			
			20/1	23	24	20/1			
			20/1	25	26	20/1			
			20/1	27	28	20/1			
			20/1	29	30	20/1			
			20/1	31	32	20/1			
			20/1	33	34	20/1			
			20/1	35	36	20/1			
			20/1	37	38	20/1			
			20/1	39	40	20/1			
			20/1	41	42	20/1			

PANEL LOAD SUMMARY (ALL TOTALS INCLUDE BOTH TUBS): LIGHTING: 0.0 KVA; RECEPTACLES & MISC.: 1.3 KVA; MOTOR: 0.0 KVA; HEATING: 0.0 KVA; TOTAL: 1.3 KVA. PANEL AMP SUMMARY: 10.5 PHASE A; 0.0 PHASE B; 0.0 PHASE C

PANEL ID: A5

LOCATION: --- — MOUNTING: SURFACE — MAIN TYPE: MLO — VOLTAGE: 208 / 120 — PHASE: 3 — WIRE: 4 — MAIN SIZE: 225 AMPS

LEGEND: LO: LOCK-ON DEVICE; GF: GROUND FAULT CIRCUIT INTERRUPTER; IG: ISOLATED GROUND; SH: SHUNT TRIP — COORDINATE LUG SIZE WITH WIRE SIZE ON 1 LINE DIAGRAM.

GND SIZE	WIRE SIZE	BRANCH CIRCUIT DESCRIPTION	CIRCUIT BREAKER SIZE/TYPE	CIRCUIT NUMBER	CIRCUIT NUMBER	CIRCUIT BREAKER SIZE/TYPE	BRANCH CIRCUIT DESCRIPTION	WIRE SIZE	GND SIZE
12	12	AMP RACK	20/1	1	2	20/1	AMP RACK	12	12
12	12	AMP RACK	20/1	3	4	20/1	AMP RACK	12	12
12	12	AMP RACK	20/1	5	6	20/1	AMP RACK	12	12
12	12	AMP RACK	20/1	7	8	20/1	AMP RACK	12	12
12	12	AMP RACK	20/1	9	10	20/1	AMP RACK	12	12
12	12	AMP RACK	20/1	11	12	20/1	AMP RACK	12	12
12	12	AUDIO RECEPTACLES	20/1	13	14	20/1	AMP RACK	12	12
12	12	AUDIO RECEPTACLES	20/1	15	16	20/1	AMP RACK	12	12
12	12	CATWALK AUDIO RECEP.	20/1	17	18	20/1	AMP RACK	12	12
12	12	CATWALK AUDIO RECEP.	20/1	19	20	20/1			
			20/1	21	22	20/1			
			20/1	23	24	20/1			
			20/1	25	26	20/1			
			20/1	27	28	20/1			
			20/1	29	30	20/1			
			20/1	31	32	20/1			
			20/1	33	34	20/1			
			20/1	35	36	20/1			
			20/1	37	38	20/1			
			20/1	39	40	20/1			
			20/1	41	42	20/1			

PANEL LOAD SUMMARY (ALL TOTALS INCLUDE BOTH TUBS): LIGHTING: 0.0 KVA; RECEPTACLES & MISC.: 28.4 KVA; MOTOR: 0.0 KVA; HEATING: 0.0 KVA; TOTAL: 28.4 KVA. PANEL AMP SUMMARY: 81.0 PHASE A; 78.0 PHASE B; 78.0 PHASE C

PANEL ID: HB

LOCATION: T001 — MOUNTING: SURFACE — MAIN TYPE: MLO — VOLTAGE: 480 / 277 — PHASE: 3 — WIRE: 4 — MAIN SIZE: 400 AMPS

LEGEND: LO: LOCK-ON DEVICE; GF: GROUND FAULT CIRCUIT INTERRUPTER; IG: ISOLATED GROUND; SH: SHUNT TRIP; *: REFER TO ONE-LINE DIAGRAM FOR WIRE SIZES — COORDINATE LUG SIZE WITH WIRE SIZE ON 1 LINE DIAGRAM. PROVIDE THRU FEED LUGS

GND SIZE	WIRE SIZE	BRANCH CIRCUIT DESCRIPTION	CIRCUIT BREAKER SIZE/TYPE	CIRCUIT NUMBER	CIRCUIT NUMBER	CIRCUIT BREAKER SIZE/TYPE	BRANCH CIRCUIT DESCRIPTION	WIRE SIZE	GND SIZE
12	12	LIGHTING	20/1	1	2	20/3	HUMIDIFIER HUM-1	*	*
12	12	LIGHTING	20/1	3	4	--	--	--	--
12	12	LIGHTING	20/1	5	6	--	--	--	--
12	12	LIGHTING	20/1	7	8	40/3	ORCHESTRA PIT LIFT	*	*
12	12	LIGHTING	20/1	9	10	--	--	--	--
12	12	LIGHTING	20/1	11	12	--	--	--	--
12	12	LIGHTING	20/1	13	14	50/3	ROOF TOP UNIT RTU-2	*	*
10	10	LIGHTING	20/1	15	16	--	--	--	--
12	12	LIGHTING	20/1	17	18	--	--	--	--
12	12	LIGHTING	20/1	19	20	15/3	AIR HANDLER UNIT AHU-1	*	*
12	12	LIGHTING	20/1	21	22	--	--	--	--
		SPARE	20/1	23	24	--	--	--	--
*	*	PUMP P3	20/3	25	26	15/3	AIR HANDLER UNIT AHU-2	*	*
--	*	--	--	27	28	--	--	--	--
--	*	--	--	29	30	--	--	--	--
*	*	PUMP P1	20/3	31	32	40/3	AIR HANDLER SUPPLY AHU-3	*	*
--	*	--	--	33	34	--	--	--	--
--	*	--	--	35	36	--	--	--	--
*	*	PUMP P2	20/3	37	38	20/1	AIR HANDLER RAF-1	*	*
--	*	--	--	39	40	--	--	--	--
--	*	--	--	41	42	--	--	--	--

PANEL LOAD SUMMARY (ALL TOTALS INCLUDE BOTH TUBS): LIGHTING: 31.5 KVA; RECEPTACLES & MISC.: 0.0 KVA; MOTOR: 123.0 KVA; HEATING: 0.0 KVA; TOTAL: 154.5 KVA. PANEL AMP SUMMARY: 205.1 PHASE A; 171.1 PHASE B; 181.4 PHASE C

PANEL ID: HB

LOCATION: T001 — MOUNTING: SURFACE — MAIN TYPE: MLO — VOLTAGE: 480 / 277 — PHASE: 3 — WIRE: 4 — MAIN SIZE: 400 AMPS

LEGEND: LO: LOCK-ON DEVICE; GF: GROUND FAULT CIRCUIT INTERRUPTER; IG: ISOLATED GROUND; SH: SHUNT TRIP — COORDINATE LUG SIZE WITH WIRE SIZE ON 1 LINE DIAGRAM.

GND SIZE	WIRE SIZE	BRANCH CIRCUIT DESCRIPTION	CIRCUIT BREAKER SIZE/TYPE	CIRCUIT NUMBER	CIRCUIT NUMBER	CIRCUIT BREAKER SIZE/TYPE	BRANCH CIRCUIT DESCRIPTION	WIRE SIZE	GND SIZE
12	12	REAR EXTERIOR LTG	20/1	43	44	20/1	SPARE		
12	12	SPARE	20/1	45	46	20/1	SPARE		
12	12	SPARE	20/1	47	48	15/3	HANDICAP LIFT	10	10
12	12	CONF.ROOM LTG	20/1	49	50	--	---	10	--
12	12	SPARE	20/1	51	52	--	---	10	--
12	12	STAIRWELL LTG	20/1	53	54	20/1			
12	12	STAIRWELL LTG	20/1	55	56	20/1			
12	12	STAIRWELL LTG	20/1	57	58	20/1			
12	12	STAIRWELL LTG	20/1	59	60	20/1			
			20/1	61	62	20/1			
			20/1	63	64	20/1			
			20/1	65	66	20/1			
			20/1	67	68	20/1			
			20/1	69	70	20/1			
			20/1	71	72	20/1			
			20/1	73	74	20/1			
			20/1	75	76	20/1			
			20/1	77	78	20/1			
			20/1	79	80	20/1			
			20/1	81	82	20/1			
			20/1	83	84	20/1			

FOR PANEL LOAD AND PANEL AMP SUMMARY INFORMATION, REFER TO LEFT TUB TOTALS

PANEL ID: H2

LOCATION: SECOND FLOOR — MOUNTING: SURFACE — MAIN TYPE: MLO — VOLTAGE: 480 / 277 — PHASE: 3 — WIRE: 4 — MAIN SIZE: 100 AMPS

LEGEND: LO: LOCK-ON DEVICE; GF: GROUND FAULT CIRCUIT INTERRUPTER; IG: ISOLATED GROUND; SH: SHUNT TRIP — COORDINATE LUG SIZE WITH WIRE SIZE ON 1 LINE DIAGRAM.

GND SIZE	WIRE SIZE	BRANCH CIRCUIT DESCRIPTION	CIRCUIT BREAKER SIZE/TYPE	CIRCUIT NUMBER	CIRCUIT NUMBER	CIRCUIT BREAKER SIZE/TYPE	BRANCH CIRCUIT DESCRIPTION	WIRE SIZE	GND SIZE
			20/1	1	2	20/1			
			20/1	3	4	20/1			
			20/1	5	6	20/1			
			20/1	7	8	20/1			
			20/1	9	10	20/1			
			20/1	11	12	20/1			
			20/1	13	14	20/1			
			20/1	15	16	20/1			
			20/1	17	18	20/1			
			20/1	19	20	20/1			
			20/1	21	22	20/1			
			20/1	23	24	20/1			
			20/1	25	26	20/1			
			20/1	27	28	20/1			
			20/1	29	30	20/1			
			20/1	31	32	20/1			
			20/1	33	34	20/1			
			20/1	35	36	20/1			
			20/1	37	38	20/1			
			20/1	39	40	20/1			
			20/1	41	42	20/1			

PANEL LOAD SUMMARY (ALL TOTALS INCLUDE BOTH TUBS): LIGHTING: 0.0 KVA; RECEPTACLES & MISC.: 0.0 KVA; MOTOR: 0.0 KVA; HEATING: 0.0 KVA; TOTAL: 0.0 KVA. PANEL AMP SUMMARY: 0.0 PHASE A; 0.0 PHASE B; 0.0 PHASE C

PANEL ID: INV

LOCATION: --- — MOUNTING: SURFACE — MAIN TYPE: MLO — VOLTAGE: 208 / 120 — PHASE: 3 — WIRE: 4 — MAIN SIZE: 100 AMPS

LEGEND: LO: LOCK-ON DEVICE — COORDINATE LUG SIZE WITH WIRE SIZE ON 1 LINE DIAGRAM.

GND SIZE	WIRE SIZE	BRANCH CIRCUIT DESCRIPTION	CIRCUIT BREAKER SIZE/TYPE	CIRCUIT NUMBER	CIRCUIT NUMBER	CIRCUIT BREAKER SIZE/TYPE	BRANCH CIRCUIT DESCRIPTION	WIRE SIZE	GND SIZE
10	10	EM. LTG. UNDER BALCONY	20/1,LO	1	2	20/1,LO	EM. LTG. BALCONY FOYER	10	10
10	10	EM. LTG. RM. T113	20/1,LO	3	4	20/1,LO	EM. LTG. HOUSE	10	10
10	10	EM. LTG. RM. T113	20/1,LO	5	6	20/1,LO	EM. LTG. HOUSE	10	10
10	10	EM. LTG. CORR. T109&T118	20/1,LO	7	8	20/1,LO	EM. LTG. HOUSE	10	10
10	10	EM. LTG. LOUNGE T113	20/1,LO	9	10	20/1,LO	EM. LTG. 1st&2nd FL. R.R.	10	10
10	10	EM. LTG. BALCONY	20/1,LO	11	12	20/1,LO	EM. LTG. BALCONY STAIRS	10	10
10	10	EM. LTG STAGE	20/1	13	14	20/1	EM. LTG. 4th FL. R.R.	12	12
		SPARE	20/1	15	16	20/1	EM. LTG. AISLE	12	12
		SPARE	20/1	17	18	20/1	ORCH. LIFT WARNING LTG.	12	12
				19	20				
				21	22				
				23	24				
				25	26				
				27	28				
				29	30				
				31	32				
				33	34				
				35	36				
				37	38				
				39	40				
				41	42				

PANEL LOAD SUMMARY (ALL TOTALS INCLUDE BOTH TUBS): LIGHTING: 13.8 KVA; RECEPTACLES & MISC.: 0.0 KVA; MOTOR: 0.0 KVA; HEATING: 0.0 KVA; TOTAL: 13.8 KVA. PANEL AMP SUMMARY: 42.5 PHASE A; 43.2 PHASE B; 29.5 PHASE C

PANEL ID: LBA

LOCATION: T001 — MOUNTING: SURFACE — MAIN TYPE: MLO — VOLTAGE: 208 / 120 — PHASE: 3 — WIRE: 4 — MAIN SIZE: 225 AMPS

LEGEND: LO: LOCK-ON DEVICE; GF: GROUND FAULT CIRCUIT INTERRUPTER; IG: ISOLATED GROUND; SH: SHUNT TRIP — COORDINATE LUG SIZE WITH WIRE SIZE ON 1 LINE DIAGRAM. PROVIDE THRU FEED LUGS

GND SIZE	WIRE SIZE	BRANCH CIRCUIT DESCRIPTION	CIRCUIT BREAKER SIZE/TYPE	CIRCUIT NUMBER	CIRCUIT NUMBER	CIRCUIT BREAKER SIZE/TYPE	BRANCH CIRCUIT DESCRIPTION	WIRE SIZE	GND SIZE
12	12	RECEPTACLES	20/1	1	2	20/1	LIGHTING	12	12
12	12	REFR. RECEPTACLES	20/1	3	4	20/1	LIGHTING	12	12
12	12	COUNTER RECEPTACLES	20/1	5	6	20/1	LIGHTING	12	12
12	12	MICROWAVE RECEPTACLES	20/1	7	8	20/1	LIGHTING	12	12
12	12	RECEPTACLES	20/1	9	10	20/1	AISLE LIGHTING	12	12
12	12	RECEPTACLES	20/1	11	12	20/1	ORCHESTRA LIFT EDGE LTG	12	12
12	12	RECEPTACLES	20/1	13	14	20/1	FIRST FLOOR DRESSING LTG	12	12
12	12	RECEPTACLES	20/1	15	16	20/1	FIRST FLOOR DRESSING LTG	12	12
12	12	RECEPTACLES	20/1	17	18	20/1	ORCHESTRA PIT LIGHTING	12	12
12	12	RECEPTACLES	20/1	19	20	20/1	PUMP P-4	12	12
12	12	RECEPTACLES	20/1	21	22	20/1	RECEPTACLES	12	12
12	12	RECEPTACLES	20/1	23	24	20/1	RECEPTACLES	12	12
12	12	RECEPTACLES	20/1	25	26	20/1	RECEPTACLES	12	12
12	12	RECEPTACLES	20/1	27	28	20/1	RECEPTACLES	12	12
12	12	DRESSING ROOM FC-2	20/1	29	30	20/1	EF-5, EF-6/RECEP.	12	12
12	12	RTU REC/LTG	20/1	31	32	20/1	FC-1	12	12
12	12	HOUSE CENTER RECEP.	20/1	33	34	20/1	TEMP. CONTROL PANEL	12	12
10	10	GRID IRON RECEP.	20/1	35	36	20/1	PUMP P-6 AND P-7	12	12
12	12	ORCHESTRA LIFT RECEP.	20/1	37	38	20/1	FIRST FL. STAGE RECEP	12	12
12	12	ORCHESTRA LIFT RECEP.	20/1	39	40	20/1	FIRST FL. STAGE RECEP	12	12
		SPARE	20/1	41	42	20/1	FIRST FL. CONC. RECEP.	12	12

PANEL LOAD SUMMARY (ALL TOTALS INCLUDE BOTH TUBS): LIGHTING: 8.0 KVA; RECEPTACLES & MISC.: 18.6 KVA; MOTOR: 5.2 KVA; HEATING: 0.0 KVA; TOTAL: 31.8 KVA. PANEL AMP SUMMARY: 94.0 PHASE A; 76.9 PHASE B; 94.2 PHASE C

PANEL ID: LBB

LOCATION: T021 — MOUNTING: FLUSH — MAIN TYPE: MLO — VOLTAGE: 208 / 120 — PHASE: 3 — WIRE: 4 — MAIN SIZE: 225 AMPS

LEGEND: LO: LOCK-ON DEVICE; GF: GROUND FAULT CIRCUIT INTERRUPTER; IG: ISOLATED GROUND; SH: SHUNT TRIP — COORDINATE LUG SIZE WITH WIRE SIZE ON 1 LINE DIAGRAM. PROVIDE THRU FEED LUGS

GND SIZE	WIRE SIZE	BRANCH CIRCUIT DESCRIPTION	CIRCUIT BREAKER SIZE/TYPE	CIRCUIT NUMBER	CIRCUIT NUMBER	CIRCUIT BREAKER SIZE/TYPE	BRANCH CIRCUIT DESCRIPTION	WIRE SIZE	GND SIZE
12	12	RECEPTACLES	20/1	1	2	20/1	RECEPTACLES	12	12
		SPARE	20/1	3	4	20/1	RECEPTACLES	12	12
		SPARE	20/1	5	6	20/1	DEHUM. RECEPTACLES	10	10
		SPARE	20/1	7	8	20/1	DEHUM. RECEPTACLES	10	10
		SPARE	20/1	9	10	20/1	RECEPTACLES	12	12
12	12	RECEPTACLES	20/1	11	12	20/1	RECEPTACLES	8	8
		SPARE	20/1	13	14	20/1	RECEPTACLES	12	12
		SPARE	20/1	15	16	20/1	RECEPTACLES	12	12
		SPARE	20/1	17	18	20/1	UNIT HEATER	12	12
		SPARE	20/1	19	20	20/1	STORAGE RECEP.		
12	12	ELECTRIC WATER COOLER	20/1	21	22	20/1	SPARE		
12	12	RECEPTACLES	20/1	23	24	20/1	LIGHTING	12	12
12	12	RECEPTACLES	20/1	25	26	20/1	LIGHTING	12	12
12	12	RECEPTACLES	20/1	27	28	20/1	LIGHTING	12	12
12	12	RECEPTACLES	20/1	29	30	20/1	LIGHTING	12	12
12	12	RECEPTACLES	20/1	31	32	20/1	LIGHTING	12	12
12	12	LIGHTING	20/1	33	34	20/1	TTB RECEPTACLES	12	12
		SPARE	20/1	35	36	20/1, LO	F.A.	12	12
12	12	RECEPTACLES	20/1	37	38	20/1	CATV RECEPTACLES	12	12
12	12	RECEPTACLES	20/1	39	40	20/1	SPARE	12	12
12	12	RECEPTACLES	20/1	41	42	20/1	SPARE	12	12

PANEL LOAD SUMMARY (ALL TOTALS INCLUDE BOTH TUBS): LIGHTING: 6.0 KVA; RECEPTACLES & MISC.: 42.6 KVA; MOTOR: 18.6 KVA; HEATING: 0.0 KVA; TOTAL: 67.2 KVA. PANEL AMP SUMMARY: 201.3 PHASE A; 187.2 PHASE B; 171.3 PHASE C

PANEL ID: LBB

LOCATION: T021 — MOUNTING: FLUSH — MAIN TYPE: MLO — VOLTAGE: 208 / 120 — PHASE: 3 — WIRE: 4 — MAIN SIZE: 225 AMPS

LEGEND: LO: LOCK-ON DEVICE; GF: GROUND FAULT CIRCUIT INTERRUPTER; IG: ISOLATED GROUND; SH: SHUNT TRIP — COORDINATE LUG SIZE WITH WIRE SIZE ON 1 LINE DIAGRAM.

GND SIZE	WIRE SIZE	BRANCH CIRCUIT DESCRIPTION	CIRCUIT BREAKER SIZE/TYPE	CIRCUIT NUMBER	CIRCUIT NUMBER	CIRCUIT BREAKER SIZE/TYPE	BRANCH CIRCUIT DESCRIPTION	WIRE SIZE	GND SIZE
12	12	RECEPTACLES	20/1	43	44	20/1	SUMP PUMP SP-2	12	12
12	12	RECEPTACLES	20/1	45	46	20/1	SEWAGE EJECTOR SE-1	12	12
12	12	RECEPTACLES	20/1	47	48	20/1	FUTURE POWER POLE	12	12
12	12	RECEPTACLES	20/1	49	50	20/1	FUTURE POWER POLE	12	12
12	12	RECEPTACLES	20/1	51	52	20/1	SUMP PUMP SP-1	12	12
12	12	RECEPTACLES	20/1	53	54	20/1	COMBUSTION AIR HEATER	12	12
12	12	RECEPTACLES	20/1	55	56	20/1	BOILER B-1	12	12
12	12	RECEPTACLES	20/1	57	58	20/1	SPARE		
12	12	RECEPTACLES	20/1	59	60	20/1	SPARE		
12	12	RECEPTACLES	20/1	61	62	20/1	HOT WTR HTR/PUMP	12	12
12	12	RECEPTACLES	20/1	63	64	30/2	DRYER	12	12
12	12	RECEPTACLES	20/1	65	66	--	---	--	--
12	12	RECEPTACLES	20/1	67	68	30/2	DRYER	12	12
12	12	RECEPTACLES	20/1	69	70	--	---	--	--
12	12	RECEPTACLES	20/1	71	72	20/1	LIGHTING	12	12
12	12	RECEPTACLES	20/1	73	74	20/1			
12	12	RECEPTACLES	20/1	75	76	20/1			
12	12	RECEPTACLES	20/1	77	78	20/1			
12	12	RECEPTACLES	20/1	79	80	20/1			
12	12	RECEPTACLES	20/1	81	82	20/1			
12	12	ELEVATOR CAB LTG/ALARM	20/1	83	84	20/1			

FOR PANEL LOAD AND PANEL AMP SUMMARY INFORMATION, REFER TO LEFT TUB TOTALS

PANEL ID: L1A

LOCATION: C102 — MOUNTING: SURFACE — MAIN TYPE: MLO — VOLTAGE: 208 / 120 — PHASE: 3 — WIRE: 4 — MAIN SIZE: 225 AMPS

LEGEND: LO: LOCK-ON DEVICE; GF: GROUND FAULT CIRCUIT INTERRUPTER; IG: ISOLATED GROUND; SH: SHUNT TRIP — COORDINATE LUG SIZE WITH WIRE SIZE ON 1 LINE DIAGRAM. PROVIDE SUB FEED LUGS. PROVIDE ISOLATED GROUND BUS

GND SIZE	WIRE SIZE	BRANCH CIRCUIT DESCRIPTION	CIRCUIT BREAKER SIZE/TYPE	CIRCUIT NUMBER	CIRCUIT NUMBER	CIRCUIT BREAKER SIZE/TYPE	BRANCH CIRCUIT DESCRIPTION	WIRE SIZE	GND SIZE
12	12	TICKET BOOTH RECEP.	20/1	1	2	20/1	MARQUEE SIGN	12	12
12	12	TICKET BOOTH RECEP.	20/1 IG	3	4	20/1	MARQUEE SIGN	12	12
12	12	RECEPTACLES	20/1 IG	5	6	20/1	MARQUEE SIGN	12	12
12	12	RECEPTACLES	20/1	7	8	20/1	WP RECEPTACLE	12	12
12	12	RECEPTACLES	20/1	9	10	20/1	WP RECEPTACLE	12	12
12	12	RECEPTACLES	20/1 IG	11	12	20/1	RECEPTACLES	12	12
12	12	ELEC. WATER COOLER	20/1	13	14	20/1	RECEPTACLES	12	12
12	12	RECEPTACLES	20/1	15	16	20/1	RECEPTACLES	12	12
12	12	RECEPTACLES	20/1	17	18	20/1	RECEPTACLE	12	12
12	12	RECEPTACLES	20/1	19	20	20/1	RECEPTACLE	12	12
12	12	RECEPTACLES	20/1	21	22	20/1	RECEPTACLE	12	12
12	12	RECEPTACLES	20/1	23	24	20/1	RECEPTACLE	12	12
12	12	RECEPTACLES	20/1	25	26	20/1	RECEPTACLE	12	12
12	12	RECEPTACLES	20/1	27	28	20/1	RECEPTACLE	12	12
12	12	RECEPTACLES	20/1	29	30	20/1	RECEPTACLE	12	12
12	12	EXT. LIGHTING	20/1	31	32	20/1	MARQUEE LTG.	12	12
12	12	LIGHTING	20/1	33	34	20/1	MARQUEE LTG.	12	12
12	12	LIGHTING	20/1	35	36	20/1	SPARE	12	12
12	12	MARQUEE LTG.	20/1	37	38	20/1	SPARE	12	12
12	12	LIGHTING	20/1	39	40	20/1	SPARE	12	12
12	12	LIGHTING	20/1	41	42	20/1			

PANEL LOAD SUMMARY (ALL TOTALS INCLUDE BOTH TUBS): LIGHTING: 12.1 KVA; RECEPTACLES & MISC.: 19.1 KVA; MOTOR: 0.0 KVA; HEATING: 0.0 KVA; TOTAL: 31.2 KVA. PANEL AMP SUMMARY: 88.9 PHASE A; 85.4 PHASE B; 85.6 PHASE C

PANEL ID: L1A

LOCATION: C102 — MOUNTING: SURFACE — MAIN TYPE: MLO — VOLTAGE: 208 / 120 — PHASE: 3 — WIRE: 4 — MAIN SIZE: 225 AMPS

LEGEND: LO: LOCK-ON DEVICE; GF: GROUND FAULT CIRCUIT INTERRUPTER; IG: ISOLATED GROUND; SH: SHUNT TRIP — COORDINATE LUG SIZE WITH WIRE SIZE ON 1 LINE DIAGRAM.

GND SIZE	WIRE SIZE	BRANCH CIRCUIT DESCRIPTION	CIRCUIT BREAKER SIZE/TYPE	CIRCUIT NUMBER	CIRCUIT NUMBER	CIRCUIT BREAKER SIZE/TYPE	BRANCH CIRCUIT DESCRIPTION	WIRE SIZE	GND SIZE
12	12	AUTO FLUSH VALVE	20/1	43	44	20/1	CONCESION RECEP.	12	12
12	12	DOOR HOLDER	20/1	45	46	20/1	CONCESION DISPOSAL	12	12
12	12	AUTO FLUSH VALVE	20/1	47	48	20/1, GF	MOS	12	12
12	12	CABINET UNIT HTR CUH-1	20/1	49	50	20/1, GF	MOS	12	12
12	12	TICKET BOOTH RECEP.	20/1	51	52	20/1			
12	12	RECEPTACLES	20/1	53	54	20/1			
			20/1	55	56	20/1			
			20/1	57	58	20/1			
			20/1	59	60	20/1			
			20/1	61	62	20/1			
			20/1	63	64	20/1			
			20/1	65	66	20/1			
			20/1	67	68	20/1			
			20/1	69	70	20/1			
			20/1	71	72	20/1			
			20/1	73	74	20/1			
			20/1	75	76	20/1			
			20/1	77	78	20/1			
			20/1	79	80	20/1			
			20/1	81	82	20/1			
			20/1	83	84	20/1			

FOR PANEL LOAD AND PANEL AMP SUMMARY INFORMATION, REFER TO LEFT TUB TOTALS

PANEL ID: L1B

LOCATION: C115 — MOUNTING: SURFACE — MAIN TYPE: MLO — VOLTAGE: 208 / 120 — PHASE: 3 — WIRE: 4 — MAIN SIZE: 225 AMPS

LEGEND: LO: LOCK-ON DEVICE; GF: GROUND FAULT CIRCUIT INTERRUPTER; IG: ISOLATED GROUND; SH: SHUNT TRIP — COORDINATE LUG SIZE WITH WIRE SIZE ON 1 LINE DIAGRAM. PROVIDE THRU FEED LUGS

GND SIZE	WIRE SIZE	BRANCH CIRCUIT DESCRIPTION	CIRCUIT BREAKER SIZE/TYPE	CIRCUIT NUMBER	CIRCUIT NUMBER	CIRCUIT BREAKER SIZE/TYPE	BRANCH CIRCUIT DESCRIPTION	WIRE SIZE	GND SIZE
12	12	RECEPTACLES	20/1	1	2	20/1	RECEPTACLES	12	12
12	12	RECEPTACLES	20/1	3	4	20/1	RECEPTACLES	12	12
12	12	RECEPTACLES	20/1	5	6	20/1	RECEPTACLES	12	12
12	12	RECEPTACLES	20/1	7	8	20/1	RECEPTACLES	12	12
12	12	RECEPTACLES	20/1	9	10	20/1	RECEPTACLES	12	12
12	12	RECEPTACLES	20/1	11	12	20/1	RECEPTACLES	12	12
12	12	RECEPTACLES	20/1	13	14	20/1	RECEPTACLES	12	12
12	12	RECEPTACLES	20/1	15	16	20/1	RECEPTACLES	12	12
12	12	RECEPTACLES	20/1	17	18	20/1	RECEPTACLES	12	12
12	12	DISPOSAL	20/1	19	20	20/1	RECEPTACLES	12	12
12	12	FLOOR RECEPTACLES	20/1	21	22	20/1	PUMP P-8 AND P-9	12	12
12	12	FLOOR RECEPTACLES	20/1	23	24	20/1	WINDOW RECEP.	12	12
12	12	FLOOR RECEPTACLES	20/1	25	26	20/1	RECEPTACLES	12	12
12	12	FLOOR RECEPTACLES	20/1	27	28	20/1	SUMP PUMP	12	12
12	12	FLOOR RECEPTACLES	20/1	29	30	35/3	DOCK LEVELER	8	8
12	12	FLOOR RECEPTACLES	20/1	31	32	--	---	8	--
12	12	FLOOR RECEPTACLES	20/1	33	34	--	---	8	--
12	12	FLOOR RECEPTACLES	20/1	35	36	20/1	RECEPTACLES	12	12
12	12	FLOOR RECEPTACLES	20/1	37	38	20/1	FLOOR RECEPTACLES	12	12
12	12	FLOOR RECEPTACLES	20/1	39	40	20/1	FLOOR RECEPTACLES	12	12
12	12	FLOOR RECEPTACLES	20/1	41	42	20/1	FLOOR RECEPTACLES	12	12

PANEL LOAD SUMMARY (ALL TOTALS INCLUDE BOTH TUBS): LIGHTING: 0.0 KVA; RECEPTACLES & MISC.: 40.6 KVA; MOTOR: 8.6 KVA; HEATING: 0.0 KVA; TOTAL: 49.1 KVA. PANEL AMP SUMMARY: 129.5 PHASE A; 146.4 PHASE B; 133.5 PHASE C

PANEL ID: L2A

LOCATION: SECOND FLOOR — MOUNTING: SURFACE — MAIN TYPE: MLO — VOLTAGE: 208 / 120 — PHASE: 3 — WIRE: 4 — MAIN SIZE: 225 AMPS

LEGEND: LO: LOCK-ON DEVICE; GF: GROUND FAULT CIRCUIT INTERRUPTER; IG: ISOLATED GROUND; SH: SHUNT TRIP — COORDINATE LUG SIZE WITH WIRE SIZE ON 1 LINE DIAGRAM. PROVIDE THRU FEED LUGS

GND SIZE	WIRE SIZE	BRANCH CIRCUIT DESCRIPTION	CIRCUIT BREAKER SIZE/TYPE	CIRCUIT NUMBER	CIRCUIT NUMBER	CIRCUIT BREAKER SIZE/TYPE	BRANCH CIRCUIT DESCRIPTION	WIRE SIZE	GND SIZE
12	12	TTB RECEPTACLES	20/1	1	2	25/1	EXHAUST FAN EF-7	10	10
12	12	RECEPTACLES	20/1	3	4	20/1	RTU REC/LTG	12	12
12	12	RECEPTACLES	20/1	5	6	20/1			
12	12	RECEPTACLES	20/1	7	8	20/1			
12	12	RECEPTACLES	20/1	9	10	20/1			
12	12	RECEPTACLES	20/1	11	12	20/1			
			20/1	13	14	20/1			
			20/1	15	16	20/1			
			20/1	17	18	20/1			
			20/1	19	20	20/1			
			20/1	21	22	20/1			
			20/1	23	24	20/1			
			20/1	25	26	20/1			
			20/1	27	28	20/1			
			20/1	29	30	20/1			
			20/1	31	32	20/1			
			20/1	33	34	20/1			
			20/1	35	36	20/1			
			20/1	37	38	20/1			
			20/1	39	40	20/1			
			20/1	41	42	20/1			

PANEL LOAD SUMMARY (ALL TOTALS INCLUDE BOTH TUBS): LIGHTING: 0.5 KVA; RECEPTACLES & MISC.: 2.7 KVA; MOTOR: 0.5 KVA; HEATING: 0.0 KVA; TOTAL: 3.7 KVA. PANEL AMP SUMMARY: 10.4 PHASE A; 14.3 PHASE B; 6.0 PHASE C

KORDA/NEMETH ENGINEERING, INC.
1650 WATERMARK DRIVE
COLUMBUS, OHIO 43215
DESIGNED BY Robert F. Gardner
DRAWN BY Peter M. Westhoff
CHECKED BY
KNE JOB # 2000-0110

STATE OF OHIO — GERALD A. PETRIC — E-40996 — REGISTERED PROFESSIONAL ENGINEER

HRJL ARCHITECTS — HARDEN • REID • JAHNES • LUCHTENBERG

DRAWN BY
CHECKED BY
COMMISSION NO. 2000045
DATE JANUARY 11, 2001
REVISIONS

E5.2

OF SHEETS

©COPYRIGHT 2000 HARDEN, REID, JAHNES & LUCHTENBERG ARCHITECTS, INC.
THESE DOCUMENTS HAVE BEEN PREPARED SPECIFICALLY FOR THE TITLED PROJECT. THEY ARE NOT SUITABLE FOR USE ON OTHER PROJECTS OR IN OTHER LOCATIONS WITHOUT THE APPROVAL AND PARTICIPATION OF THE ARCHITECT. REPRODUCTION IS PROHIBITED.

DIMMING SYSTEM SCHEDULE

CIRCUIT NUMBER	CIRCUIT TYPE	ZONE DESCRIPTION	ZONE NUMBER	CIRCUIT WATTAGE	COMMENTS/REMARKS
D0	–	–	–	–	REFER TO THEATER CONSULTANTS PACKAGE FOR REQUIREMENTS
D1–1	INC.	LIGHTING	–	1.53	–
D1–2	INC.	4TH FL. LOBBY LTG.	–	1.08	–
D1–3	INC.	HOUSE EM LTG.	–	1.44	–
D1–4	INC.	4TH FL. LOBBY LTG.	–	1.35	–
D1–5	INC.	HOUSE GEN LTG.	–	1.04	–
D1–6	INC.	4TH FL. LOBBY LTG.	–	0.96	–
D1–7	INC.	HOUSE EM LTG.	–	1.23	–
D1–8	INC.	HOUSE ADJ. CATWALK	–	1.50	–
D1–9	INC.	LIGHTING	–	1.26	–
D1–10	INC.	HOUSE EM LTG.	–	1.50	–
D1–11	INC.	LIGHTING	–	1.26	–
D1–12	INC.	HOUSE ADJ. CATWALK	–	1.50	–
D1–13	INC.	LIGHTING	–	1.34	–
D1–14	INC.	HOUSE ADJ. CATWALK	–	0.75	–
D1–15	INC.	LIGHTING	–	1.26	–
D1–16	INC.	HOUSE ADJ. CATWALK	–	1.00	–
D1–17	INC.	LIGHTING	–	1.26	–
D1–18	INC.	HOUSE ADJ. CATWALK	–	2.00	–
D1–19	INC.	HOUSE EM LTG.	–	1.28	–
D1–20	INC.	HOUSE EM LTG.	–	2.00	–
D1–21	INC.	HOUSE GEN LTG.	–	0.75	–
D1–22	INC.	HOUSE EM LTG.	–	1.00	–
D1–23	INC.	BALCONY EM LTG.	–	0.78	–
D1–24	INC.	BRANCH DOWN LTG.	–	–	–
D1–25	INC.	LIGHTING	–	1.56	–
D1–26	INC.	BRANCH DOWN LTG.	–	–	–
D1–27	INC.	MARQUEE LTG.	–	1.92	–
D1–28	INC.	4TH FL. LTG.	–	1.40	–
D1–29	INC.	MARQUEE LTG.	–	1.92	–
D1–30	INC.	4TH FL. LTG.	–	1.75	–
D1–31	INC.	LIGHTING	–	0.70	–
D1–32	INC.	4TH FL. LTG.	–	1.52	–
D1–33	INC.	LIGHTING	–	0.70	–
D1–34	INC.	4TH FL. LTG.	–	1.52	–
D1–35	INC.	CORRIDOR EM LTG.	–	0.48	–
D1–36	–	SPARE	–	–	–
D1–37	INC.	BALCONY EM LTG.	–	0.50	–
D1–38	–	SPARE	–	–	–
D1–39	–	SPARE	–	–	–
D1–40	–	SPARE	–	–	–
D1–41	–	SPARE	–	–	–
D1–42	–	SPARE	–	–	–
D1–43	–	SPARE	–	–	–
D1–44	–	SPARE	–	–	–
D1–45	–	SPARE	–	–	–
D1–46	–	SPARE	–	–	–
D1–47	–	SPARE	–	–	–
D1–48	–	SPARE	–	–	–
D1–131	–	THEATER LIGHTING	–	–	–
D1–132	–	THEATER LIGHTING	–	–	–
D2–1	INC.	TRACK LIGHTING	–	2.70	–
D2–2	INC.	TRACK LIGHTING	–	1.80	–
D2–3	INC.	TRACK LIGHTING	–	3.60	–
D2–4	INC.	TRACK LIGHTING	–	1.08	–
D2–5	INC.	TRACK LIGHTING	–	1.44	–
D2–6	INC.	TRACK LIGHTING	–	2.26	–
D2–7	INC.	TRACK LIGHTING	–	2.25	–
D2–8	INC.	TRACK LIGHTING	–	2.25	–
D2–9	INC.	TRACK LIGHTING	–	2.25	–
D2–10	INC.	TRACK LIGHTING	–	2.70	–
D2–11	INC.	TRACK LIGHTING	–	2.70	–
D2–12	INC.	TRACK LIGHTING	–	0.28	–
D3–1	INC.	LIGHTING	–	0.60	–
D3–2	INC.	LIGHTING	–	1.70	–
D3–3	INC.	LIGHTING	–	0.90	–
D3–4	INC.	LIGHTING	–	1.51	–
D3–5	INC.	TRACK LIGHTING	–	0.90	–
D3–6	INC.	TRACK LIGHTING	–	1.35	–
D3–7	INC.	TRACK LIGHTING	–	0.90	–
D3–8	INC.	TRACK LIGHTING	–	0.90	–
D3–9	INC.	TRACK LIGHTING	–	1.35	–
D3–10	INC.	TRACK LIGHTING	–	0.90	–
D3–11	–	SPARE	–	–	–
D3–12	–	SPARE	–	–	–
D4–1	INC.	FOUNDERS CHAND.	–	1.20	–
D4–2	INC.	FOUNDERS DOWN LTG.	–	1.80	–
D4–3	INC.	FOUNDERS BAR LTG.	–	0.90	–
D4–4	–	SPARE	–	–	–
D4–5	INC.	FOUNDERS EM LTG.	–	–	–
D4–6	–	SPARE	–	–	–

PANEL ID: L2B
LOCATION: SECOND FLOOR
MOUNTING: SURFACE
MAIN TYPE: MLO
VOLTAGE: 208 / 120
PHASE: 3
WIRE: 4
MAIN SIZE: 100 AMPS
LEGEND: LO: LOCK–ON DEVICE
GF: GROUND FAULT CIRCUIT INTERRUPTER
IG: ISOLATED GROUND
SH: SHUNT TRIP
COORDINATE LUG SIZE WITH WIRE SIZE ON 1 LINE DIAGRAM.

GND SIZE	WIRE SIZE	BRANCH CIRCUIT DESCRIPTION	CIRCUIT BREAKER SIZE/TYPE	CIRCUIT NUMBER	CIRCUIT NUMBER	CIRCUIT BREAKER SIZE/TYPE	BRANCH CIRCUIT DESCRIPTION	WIRE SIZE	GND SIZE
12	12	RECEPTACLES	20/1	1	2	20/1	FNDR'S LNGE RESTROOM LTG	12	12
12	12	RECEPTACLES	20/1 GF	3	4	20/1	SPARE		
12	12	RECEPTACLES	20/1	5	6	25/1	DISPOSAL	10	10
12	12	RECEPTACLES	20/1	7	8	20/1	ICE MACHINE	12	12
12	12	SPARE	20/1	9	10	20/1	THEATRICAL RECEP.	12	12
12	12	RTU LIGHT/RECEP.	20/1 GF	11	12	20/1	THEATRICAL RECEP.	12	12
12	12	RECEPTACLES	20/1	13	14	20/1	THEATRICAL RECEP.	12	12
12	12	RECEPTACLES	20/1	15	16	20/1	THEATRICAL RECEP.	12	12
12	12	RECEPTACLE	20/1	17	18	20/1	THEATRICAL RECEP.	12	12
12	12	RECEPTACLE	20/1	19	20	20/1			
12	12	RECEPTACLE	20/1	21	22	20/1			
12	12	RECEPTACLE	20/1	23	24	20/1			
12	12	RECEPTACLES	20/1	25	26	20/1			
12	12	REFRIGERATOR	20/1	27	28	20/1			
12	12	DISHWASHER	20/2	29	30	20/1			
12	12	---	—	31	32	20/1			
			20/1	33	34	20/1			
			20/1	35	36	20/1			
			20/1	37	38	20/1			
			20/1	39	40	20/1			
			20/1	41	42	20/1			

PANEL LOAD SUMMARY: (ALL TOTALS INCLUDE BOTH TUBS)
LIGHTING: 0.4 KVA
RECERTACLES & MISC.: 14.5 KVA
MOTOR: 1.7 KVA
HEATING: 0.0 KVA
TOTAL: 16.6 KVA
PANEL AMP SUMMARY:
45.0 PHASE A
30.5 PHASE B
62.7 PHASE C

PANEL ID: L3A
LOCATION: SECOND FLOOR
MOUNTING: SURFACE
MAIN TYPE: MLO
VOLTAGE: 208 / 120
PHASE: 3
WIRE: 4
MAIN SIZE: 100 AMPS
LEGEND: LO: LOCK–ON DEVICE
GF: GROUND FAULT CIRCUIT INTERRUPTER
IG: ISOLATED GROUND
SH: SHUNT TRIP
COORDINATE LUG SIZE WITH WIRE SIZE ON 1 LINE DIAGRAM.

GND SIZE	WIRE SIZE	BRANCH CIRCUIT DESCRIPTION	CIRCUIT BREAKER SIZE/TYPE	CIRCUIT NUMBER	CIRCUIT NUMBER	CIRCUIT BREAKER SIZE/TYPE	BRANCH CIRCUIT DESCRIPTION	WIRE SIZE	GND SIZE
			20/1	1	2	20/1	SPARE		
			20/1	3	4	20/1	3RD FLOOR RECEP.	12	12
			20/1	5	6	20/1	3RD FLOOR RECEP.	12	12
			20/1	7	8	20/1	3RD FLOOR RECEP.	12	12
			20/1	9	10	20/1	3RD FLOOR RECEP.	12	12
			20/1	11	12	20/1	3RD FLOOR RECEP.	12	12
			20/1	13	14	20/1	3RD FLOOR RECEP.	12	12
			20/1	15	16	20/1			
			20/1	17	18	20/1			
			20/1	19	20	20/1			
			20/1	21	22	20/1			
			20/1	23	24	20/1			
			20/1	25	26	20/1			
			20/1	27	28	20/1			
			20/1	29	30	20/1			
			20/1	31	32	20/1			
			20/1	33	34	20/1			
			20/1	35	36	20/1			
			20/1	37	38	20/1			
			20/1	39	40	20/1			
			20/1	41	42	20/1			

PANEL LOAD SUMMARY: (ALL TOTALS INCLUDE BOTH TUBS)
LIGHTING: 0.0 KVA
RECERTACLES & MISC.: 2.0 KVA
MOTOR: 0.0 KVA
HEATING: 0.0 KVA
TOTAL: 2.0 KVA
PANEL AMP SUMMARY:
6.0 PHASE A
4.5 PHASE B
6.0 PHASE C

PANEL ID: L5
LOCATION: T502
MOUNTING: SURFACE
MAIN TYPE: MLO
VOLTAGE: 208 / 120
PHASE: 3
WIRE: 4
MAIN SIZE: 225 AMPS
LEGEND: LO: LOCK–ON DEVICE
PROVIDE PANEL WITH SUB–FEED LUGS.
COORDINATE LUG SIZE WITH WIRE SIZE ON 1 LINE DIAGRAM.

GND SIZE	WIRE SIZE	BRANCH CIRCUIT DESCRIPTION	CIRCUIT BREAKER SIZE/TYPE	CIRCUIT NUMBER	CIRCUIT NUMBER	CIRCUIT BREAKER SIZE/TYPE	BRANCH CIRCUIT DESCRIPTION	WIRE SIZE	GND SIZE
12	12	4TH FLOOR RECEP.	20/1	1	2	20/1	4TH FLOOR ROOF RECEP.	12	12
12	12	4TH FLOOR RECEP.	20/1	3	4	20/1	4TH FLOOR ROOF RECEP.	12	12
12	12	5TH FLOOR LIGHT BOOTH	20/1	5	6	20/1	4TH FLOOR ROOF RECEP.	12	12
12	12	5TH FL. PROJECTION BOOTH	20/1	7	8	20/1	4TH FLOOR RECEP.	12	12
12	12	5TH FLOOR SOUND BOOTH	20/1	9	10	20/1	4TH FLOOR RECEP.	12	12
12	12	RECEPTACLES	20/1	11	12	20/1	4TH FLOOR RECEP.	12	12
12	12	LIGHTING	20/1	13	14	20/1	4TH FLOOR RECEP.	12	12
12	12	LIGHTING	20/1	15	16	20/1	5TH FLOOR RECEP.	12	12
12	12	LIGHTING	20/1	17	18	20/1	5TH FLOOR RECEP.	12	12
12	12	LIGHTING	20/1	19	20	20/1	CATWALK RECEP.	12	12
12	12	LIGHTING	20/1	21	22	20/1	CATWALK RECEP.	12	12
12	12	LIGHTING	20/1	23	24	20/1	ROOF SERVICE LTG/RECEPT.	12	12
12	12	LIGHTING	20/1	25	26	15/3	EXHAUST FAN EF–1	12	12
12	12	LIGHTING	20/1	27	28	--	---	12	--
12	12	EXHAUST FAN EF–4	15/1	29	30	--	---	12	--
12	12	RECEP. T 503	20/1	31	32	20/1	EXHAUST FAN EF–2	12	12
12	12	RECEP. T 502	20/1	33	34	20/1	EXHAUST FAN EF–8	12	12
12	12	RECEP. T 502	20/1	35	36	20/1	SPARE		
10	4	PROJECTOR	60/3	37	38	15/1	EXHAUST FAN EF–3	12	12
--	4	---	--	39	40	20/1	RECEP. T 501	12	12
--	4	---	--	41	42	20/1			

PANEL LOAD SUMMARY: (ALL TOTALS INCLUDE BOTH TUBS)
LIGHTING: 9.5 KVA
RECERTACLES & MISC.: 15.4 KVA
MOTOR: 27.2 KVA
HEATING: 0.0 KVA
TOTAL: 52.1 KVA
PANEL AMP SUMMARY:
143.8 PHASE A
156.0 PHASE B
134.5 PHASE C

RELAY PANEL SCHEDULE

RELAY PANEL # R1
LOCATION–ELECTRICAL ROOM

RELAY #	BRANCH CIRCUIT CONTROLLED	CIRCUIT #	ZONE #
1	STAGE CORRIDOR LTG.	HB–17	1
2	LIGHTING POSITION WORK LIGHTS	*	2
3	FOURTH FLOOR CATWALK WORK LIGHTS	*	3
4	GRIDIRON WORK LIGHTS	HB–13	4
5	CATWALK WORK LIGHTS	L5–27	5
6	CATWALK WORK LIGHTS	L5–19	6
7	BOX SEAT PERIMETER LIGHTING	INV–18	7
8	SPARE	–	–
9	BOX SEAT CORRIDOR LIGHTING	INV–12	8
10	SPARE	–	–
11	SPARE	–	–
12	SPARE	–	–

* DO NOT EXTEND HOMERUN THROUGH RELAY. ONLY SWITCH LEG CONTROLLING LIGHTING AS SHOWN ON THE DRAWINGS IS TO EXTEND THROUGHT RELAY.

STATE OF OHIO
GERALD A. PETRIC
E–40996
REGISTERED
PROFESSIONAL ENGINEER

KORDA/NEMETH ENGINEERING, INC.
1650 WATERMARK DRIVE
COLUMBUS, OHIO 43215
DESIGNED BY Robert F. Gardner
DRAWN BY Peter M. Westhoff
CHECKED BY
KNE JOB # 2000–0110

PASTIME THEATRE

PERFORMING ARTS CENTER
538 Main Street Coshocton, Ohio

HRJL
HARDEN•REID•JAHNES•LUCHTENBERG
DRAWN BY
CHECKED BY
COMMISSION NO. 2000048
DATE JANUARY 11, 2001
REVISIONS

E5.3

OF SHEETS

©COPYRIGHT 2000

SYMBOLS LIST FOR WIRING DIAGRAMS AND DETAILS

1. SOME SYMBOLS MAY NOT BE USED.

SYMBOL	DESCRIPTION
100/3	
100	FUSIBLE SWITCH WITH FUSES (SIZE AS NOTED)
100/3	SPACE FOR DEVICE (SIZE AS NOTED)
100/3	SPARE FUSIBLE SWITCH (WITHOUT FUSES)
	CURRENT TRANSFORMER
	POTENTIAL TRANSFORMER
	FUSE
M	METER
	PANELBOARD
	GROUNDING ELECTRODE AND CONDUCTOR
	MAGNETIC MOTOR STARTER (SIZE AS NOTED)
30/20/3	SAFETY SWITCH (SWITCH SIZE, FUSE SIZE, NO. OF POLES AS NOTED) NF=NONFUSED, AUX=AUXILIARY CONTACT FOR BATTERY LOWERING OF ELEVATOR
	MOLDED CASE SWITCH FOR SHUNT TRIP OPERATION,
WP	WEATHERPROOF
CP	CONTROL PANEL
VSC	VARIABLE SPEED CONTROLLER
M	MOTOR
	AUTOMATIC TRANSFER SWITCH
	EQUIPMENT (AS NOTED)
ST	SHUNT TRIP
GF	GROUND-FAULT PROTECTION
1/NF/3	COMBINATION STARTER/DISCONNECT (STARTER SIZE, FUSE SIZE, NO. POLES AS NOTED) NF=NONFUSED
BPS	BOLTED PRESSURE SWITCH

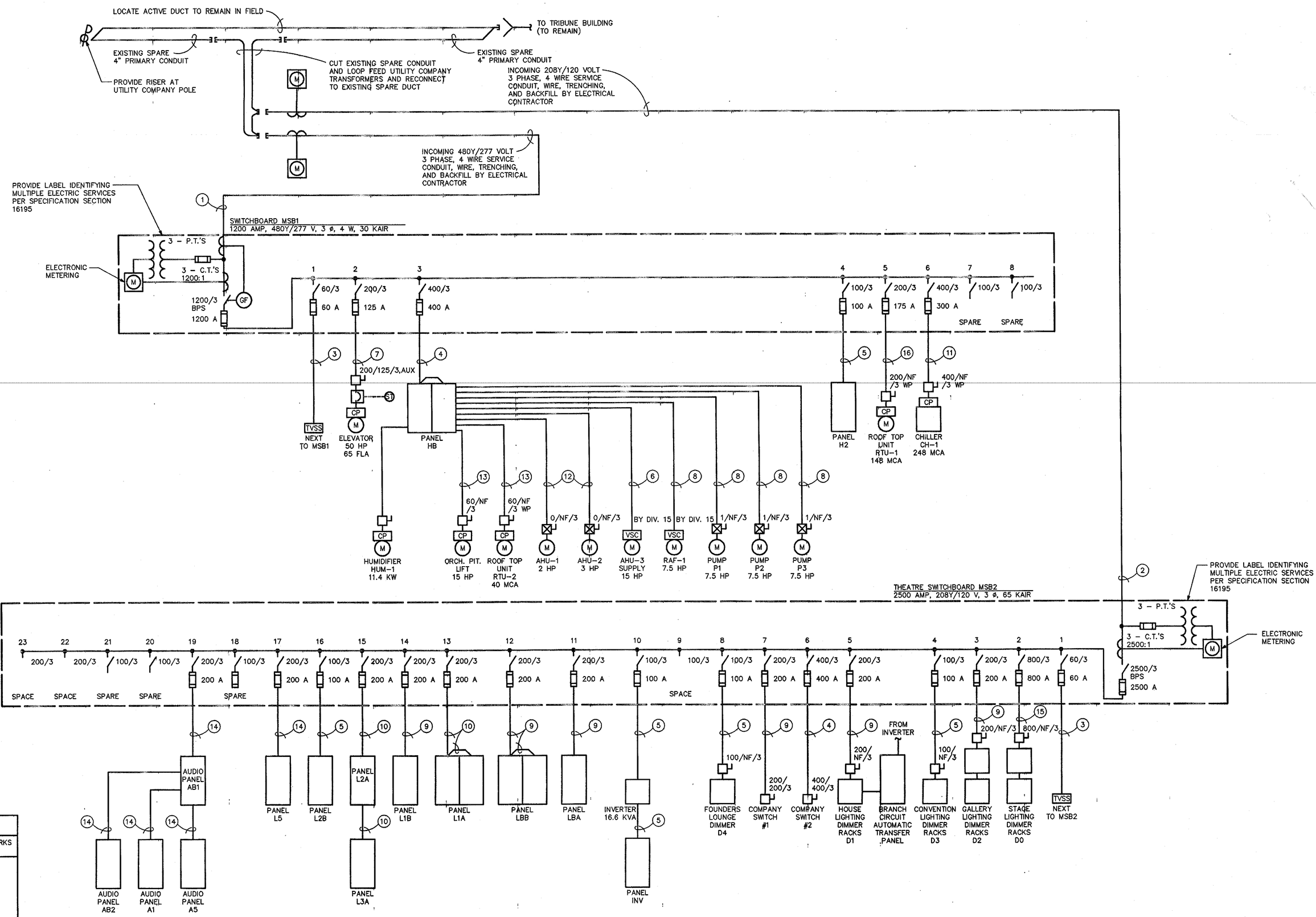

FEEDER SCHEDULE

NOTE NUMBER	NUMBER OF SETS	PHASE WIRES QUANTITY - SIZE	NEUTRAL WIRE QUANTITY - SIZE	GROUND SIZE	ISOLATED GROUND SIZE	CONDUIT SIZE PER SET	COMMENTS/REMARKS
1	3	3 - 600	1 - 600	-	-	4"	-
2	6	3 - 600	1 - 600	-	-	4"	-
3	1	3 - #4	1 - #4	#4	-	1.25"	-
4	1	3 - 600	1 - 600	#3	-	3.5"	-
5	1	3 - #1	1 - #1	#8	-	1.5"	-
6	1	3 - #8	-	#10	-	.75"	-
7	1	3 - #1/0	-	#6	-	2"	TYPE THW OR RH
8	1	3 - #6	-	#10	-	1"	-
9	1	3 - #3/0	1 - #3/0	#6	#6	2"	-
10	1	3 - 250	1 - 250	#4	#4	3"	FEEDER DERATED
11	1	3 - 350	-	#4	-	2.5"	-
12	1	3 - #12	-	#12	-	.75"	-
13	1	3 - #4	-	#10	-	1"	-
14	1	3 - #3/0	1 - #3/0	#6	-	2"	-
15	2	3 - 600	1 - 600	#1/0	-	4"	-
16	1	3 - #1/0	-	#6	-	2"	-

A WIRING DIAGRAM

ONE LINE N.T.S.

GENERAL NOTE:

1. ALL FUSIBLE SWITCHES RATED 200 AMPS AND LESS SHALL BE "TWIN" DEVICES.

PASTIME THEATRE

PERFORMING ARTS CENTER
538 Main Street Coshocton, Ohio

HRJL
HARDMAN•REID•JAMES•LUCHTENBERG

DRAWN BY
CHECKED BY
COMMISION NO. 2000088
DATE JANUARY 11, 2001
REVISIONS

E6.1

OF SHEETS

© COPYRIGHT 2000
HARDMAN, REID, JAMES & LUCHTENBERG, INC.
THESE DRAWINGS HAVE BEEN PREPARED EXCLUSIVELY FOR THE TITLED PROJECT. THEY ARE NOT TO BE USED FOR ANY OTHER PROJECT OR PURPOSE WITHOUT THE EXPRESS WRITTEN PERMISSION AND PARTICIPATION OF THE ARCHITECT. REPRODUCTION IS PROHIBITED.

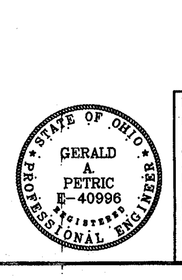

KORDA/NEMETH ENGINEERING, INC.
1650 WATERMARK DRIVE
COLUMBUS, OHIO 43215
DESIGNED BY Robert F. Gardner
DRAWN BY Peter M. Westhoff
CHECKED BY
KNE JOB # 2000-0110

SECTION 06 43 00

WOOD STAIRS AND RAILINGS – R1

PART 1 - GENERAL

1.1 RELATED DOCUMENTS

A. Drawings and general provisions of the Contract, including General and Supplementary Conditions and Division 01 Specification Sections, apply to this Section.

1.2 SUMMARY

A. Section Includes:

1. Wood stairs.
2. Shop finishing of wood stairs.

B. Shop Drawings: Show location of each item, dimensioned plans and elevations, large-scale details, attachment devices, and other components.

1. Apply WI Certified Compliance Program label to Shop Drawings.
2. Apply AWI Quality Certification Program label to Shop Drawings.

1.3 INFORMATIONAL SUBMITTALS

A. Woodwork Quality Standard Compliance Certificates: AWI Quality Certification Program certificates.

1.4 QUALITY ASSURANCE

A. Fabricator Qualifications: Shop that employs skilled workers who custom fabricate products similar to those required for this Project and whose products have a record of successful in-service performance. Shop is a certified participant in AWI's Quality Certification Program.][Shop is a licensee of WI's Certified Compliance Program.

B. Installer Qualifications: Fabricator of products Certified participant in AWI's Quality Certification Program.

1.5 DELIVERY, STORAGE, AND HANDLING

A. Do not deliver wood stairs and railings until painting and similar operations that could damage woodwork have been completed in installation areas. If wood stairs and railings

must be stored in other than installation areas, store only in areas where environmental conditions comply with requirements specified in "Field Conditions" Article.

1.6 FIELD CONDITIONS

A. Environmental Limitations: Do not deliver or install wood stairs and railings until building is enclosed, wet work is complete, and HVAC system is operating and maintaining temperature and relative humidity at occupancy levels during the remainder of the construction period.

B. Environmental Limitations: Do not deliver or install wood stairs and railings until building is enclosed, wet work is complete, and HVAC system is operating and maintaining temperature between 60 and 90 deg F (16 and 32 deg C) and relative humidity between 25 and 55 percent during the remainder of the construction period.

C. Field Measurements: Where wood stairs and railings are indicated to fit to other construction, verify dimensions of other construction by field measurements before fabrication, and indicate measurements on Shop Drawings. Coordinate fabrication schedule with construction progress to avoid delaying the Work.

1. Locate concealed framing, blocking, and reinforcements that support woodwork by field measurements before being enclosed, and indicate measurements on Shop Drawings.

D. Established Dimensions: Where wood stairs and railings are indicated to fit to other construction, establish dimensions for areas where woodwork is to fit. Provide allowance for trimming at site, and coordinate construction to ensure that actual dimensions correspond to established dimensions.

1.7 COORDINATION

A. Coordinate sizes and locations of framing, blocking, furring, reinforcements, and other related units of Work specified in other Sections to ensure that wood stairs and railings can be supported and installed as indicated.

PART 2 - PRODUCTS

2.1 WOODWORK FABRICATORS

A. Great Lakes Stair & Millwork Co.

B. Buckeye Stairs

C. ANKR Custom

D. Or other qualified local fabricator

2.2 WOOD STAIRS

A. Quality Standard: Unless otherwise indicated, comply with the "Architectural Woodwork Standards" for grades of interior architectural woodwork indicated for construction, finishes, installation, and other requirements.

1. Provide labels and certificates from AWI certification program indicating that woodwork, including installation,] complies with requirements of grades specified.
2. The Contract Documents contain selections chosen from options in the quality standard and additional requirements beyond those of the quality standard. Comply with those selections and requirements in addition to the quality standard.

B. Grade: Custom.

C. Wood for Transparent Finish: White Oak.

D. Finishes for Stair Parts: As follows:

1. Treads: Transparent.

2.3 WOOD MATERIALS

A. Wood Products: Provide materials that comply with requirements of referenced quality standard for each type of woodwork and quality grade specified unless otherwise indicated.

1. Do not use plain-sawn softwood lumber with exposed, flat surfaces more than 3 inches (75 mm) wide.
2. Wood Moisture Content: 5 to 10 percent.

2.4 MISCELLANEOUS MATERIALS

A. Furring, Blocking, Shims, and Hanging Strips: Fire-retardant-treated softwood lumber, kiln dried to less than 15 percent moisture content.

B. Rough Carriages for Stairs: existing framing in place

C. Anchors: Select material, type, size, and finish required for each substrate for secure anchorage. Provide metal expansion sleeves or expansion bolts for post-installed anchors. Use nonferrous-metal or hot-dip galvanized anchors and inserts at inside face of exterior walls and at floors.

D. Integral Bronze Nosing Strip
1. (2) 1/8" wide Dark Bronze nosing strips inlayed 1" and 2" from edge of tread.

E. Stair Nosing Transition Strip for ceramic transitions at wood stairs
1. Aluminum with Dark Bronze Finish
a. Manufacturers:
1) Schluter stair nosing for ceramic transitions

2) Profiletec, Stairtec stair nosing for ceramic transitions
3) Jeca tile stair edging for ceramic transitions

2.5 FABRICATION

A. Fabricate wood stairs and railings to dimensions, profiles, and details indicated. Ease edges to radius indicated for the following:

1. Corners of Solid-Wood (Lumber) Members: 1/16 inch (1.5 mm) unless otherwise indicated.

B. Complete fabrication, including assembly, finishing, and hardware application, to maximum extent possible before shipment to Project site. Disassemble components only as necessary for shipment and installation. Where necessary for fitting at site, provide ample allowance for scribing, trimming, and fitting.

1. Notify Architect seven days in advance of the dates and times woodwork fabrication will be complete.
2. Trial fit assemblies at fabrication shop that cannot be shipped completely assembled. Install dowels, screws, bolted connectors, and other fastening devices that can be removed after trial fitting. Verify that various parts fit as intended and check measurements of assemblies against field measurements before disassembling for shipment.

C. Glue treads to risers, and glue and nail treads and risers to carriages.
1. Fabricate stairs with treads and risers no more than 1/8 inch (3 mm) from indicated position and no more than 1/16 inch (1.5 mm) out of relative position for adjacent treads and risers.

2.6 SHOP FINISHING

A. General: Finish wood stairs and railings at fabrication shop as specified in this Section. Defer only final touchup, cleaning, and polishing until after installation.

B. General: Shop finish transparent-finished wood stairs and railings at fabrication shop as specified in this Section. Refer to Section 099123 "Interior Painting" for field finishing opaque-finished architectural woodwork.

C. General: Drawings indicate items that are required to be shop finished. Finish such items at fabrication shop as specified in this Section. Refer to Section 099300 "Staining and Transparent Finishing" for field finishing architectural woodwork not indicated to be shop finished.

D. Shop Priming: Shop apply the prime coat including backpriming, if any, for transparent-finished items specified to be field finished. Refer to Section 099300 "Staining and Transparent Finishing" for material and application requirements.

E. Preparation for Finishing: Comply with referenced quality standard for sanding, filling countersunk fasteners, sealing concealed surfaces, and similar preparations for finishing architectural woodwork, as applicable to each unit of work.

1. Backpriming: Apply one coat of sealer or primer, compatible with finish coats, to concealed surfaces of woodwork.

F. Transparent Finish:

1. Grade: Custom.
2. Finish: System - 12, water-based polyurethane.
3. Finish: System - 13, catalyzed polyester.
4. Wash Coat for Closed-Grain Woods: Apply wash-coat sealer to woodwork made from closed-grain wood before staining and finishing.
5. Staining: None required
6. Open Finish for Open-Grain Woods: Do not apply filler to open-grain woods.
7. Filled Finish for Open-Grain Woods: Apply paste wood filler and wipe off excess. Tint filler to match stained wood.
8. Sheen: Satin, 31-45 gloss units measured on 60-degree gloss meter per ASTM D 523.

PART 3 - EXECUTION

3.1 PREPARATION

A. Before installation, condition wood stairs and railings to average prevailing humidity conditions in installation areas.

B. Before installing wood stairs and railings, examine shop-fabricated work for completion and complete work as required, including removal of packing and backpriming.

3.2 INSTALLATION

A. Grade: Install wood stairs and railings to comply with same grade as item to be installed.

B. Assemble wood stairs and railings and complete fabrication at Project site to the extent that it was not completed in the shop.

C. Stairs: Securely anchor carriages to supporting substrates. Install stairs with treads and risers no more than 1/8 inch (3 mm) from indicated position.

D. Touch up finishing work specified in this Section after installation of wood stairs and railings. Fill nail holes with matching filler where exposed.

1. Apply specified finish coats, including stains and paste fillers if any, to exposed surfaces where only sealer/prime coats are applied in shop.

E. Refer to Section 099300 "Staining and Transparent Finishing" for final finishing of installed wood stairs not indicated to be shop finished.

3.3 ADJUSTING AND CLEANING

A. Repair damaged and defective wood stairs and railings, where possible, to eliminate functional and visual defects; where not possible to repair, replace wood stairs and railings. Adjust joinery for uniform appearance.

B. Clean wood stairs and railings on exposed and semiexposed surfaces. Touch up shop-applied finishes to restore damaged or soiled areas.

END OF SECTION 06 43 00

SECTION 09 30 13

CERAMIC TILING – R1

PART 1 - GENERAL

1.1 RELATED DOCUMENTS

A. Drawings and general provisions of the Contract, including General and Supplementary Conditions and Division 01 Specification Sections, apply to this Section.

1.2 SUMMARY

A. Section Includes:

1. Ceramic mosaic tile.
2. Porcelain tile.
3. Waterproof membrane.
4. Crack isolation membrane.
5. Metal edge strips.

B. Related Requirements:
1. Section 079200 "Joint Sealants" for sealing of expansion, contraction, control, and isolation joints in tile surfaces.
2. Section 092900 "Gypsum Board" for [cementitious backer units] [glass-mat, water-resistant backer board].

1.3 DEFINITIONS

A. General: Definitions in the ANSI A108 series of tile installation standards and in ANSI A137.1 apply to Work of this Section unless otherwise specified.

B. ANSI A108 Series: ANSI A108.01, ANSI A108.02, ANSI A108.1A, ANSI A108.1B, ANSI A108.1C, ANSI A108.4, ANSI A108.5, ANSI A108.6, ANSI A108.8, ANSI A108.9, ANSI A108.10, ANSI A108.11, ANSI A108.12, ANSI A108.13, ANSI A108.14, ANSI A108.15, ANSI A108.16, and ANSI A108.17, which are contained in its "Specifications for Installation of Ceramic Tile."

C. Module Size: Actual tile size plus joint width indicated.

D. Face Size: Actual tile size, excluding spacer lugs.

1.4 PREINSTALLATION MEETINGS

A. Preinstallation Conference: Conduct conference at Project site.

1. Review requirements in ANSI A108.01 for substrates and for preparation by other trades.

1.5 ACTION SUBMITTALS

A. Product Data: For each type of product.

B. Shop Drawings: Show locations of each type of tile and tile pattern. Show widths, details, and locations of expansion, contraction, control, and isolation joints in tile substrates and finished tile surfaces.

C. Samples for Verification:

1. Full-size units of each type and composition of tile and for each color and finish required. For ceramic mosaic tile in color blend patterns, provide full sheets of each color blend.
2. Full-size units of each type of trim and accessory for each color and finish required.
3. Metal edge strips in 6-inch (150-mm) lengths.

1.6 INFORMATIONAL SUBMITTALS

A. Qualification Data: For Installer.

B. Master Grade Certificates: For each shipment, type, and composition of tile, signed by tile manufacturer and Installer.

C. Product Certificates: For each type of product.

D. Product Test Reports: For tile-setting and -grouting products and certified porcelain tile.

1.7 QUALITY ASSURANCE

A. Mockups: Build mockups to verify selections made under Sample submittals and to demonstrate aesthetic effects and set quality standards for materials and execution.
1. Build mockup of each type of wall tile installation.
2. Subject to compliance with requirements, approved mockups may become part of the completed Work if undisturbed at time of Substantial Completion.

1.8 DELIVERY, STORAGE, AND HANDLING

A. Deliver and store packaged materials in original containers with seals unbroken and labels intact until time of use. Comply with requirements in ANSI A137.1 for labeling tile packages.

B. Store tile and cementitious materials on elevated platforms, under cover, and in a dry location.

C. Store aggregates where grading and other required characteristics can be maintained and contamination can be avoided.

D. Store liquid materials in unopened containers and protected from freezing.

1.9 FIELD CONDITIONS

A. Environmental Limitations: Do not install tile until construction in spaces is complete and ambient temperature and humidity conditions are maintained at the levels indicated in referenced standards and manufacturer's written instructions.

PART 2 - PRODUCTS

2.1 MANUFACTURERS

A. Source Limitations for Tile: Obtain tile of each type and color or finish from single source or producer.

1. Obtain tile of each type and color or finish from same production run and of consistent quality in appearance and physical properties for each contiguous area.

B. Source Limitations for Setting and Grouting Materials: Obtain ingredients of a uniform quality for each mortar, adhesive, and grout component from single manufacturer and each aggregate from single source or producer.

C. Source Limitations for Other Products: Obtain each of the following products specified in this Section from a single manufacturer:
1. Waterproof membrane.
2. Crack isolation membrane.
3. Cementitious backer units.
4. Metal edge strips.

2.2 PRODUCTS, GENERAL

A. ANSI Ceramic Tile Standard: Provide tile that complies with ANSI A137.1 for types, compositions, and other characteristics indicated.

1. Provide tile complying with Standard grade requirements unless otherwise indicated.

B. ANSI Standards for Tile Installation Materials: Provide materials complying with ANSI A108.02, ANSI standards referenced in other Part 2 articles, ANSI standards referenced by TCNA installation methods specified in tile installation schedules, and other requirements specified.

C. Factory Blending: For tile exhibiting color variations within ranges, blend tile in factory and package so tile units taken from one package show same range in colors as those taken from other packages and match approved Samples.

D. Mounting: For factory-mounted tile, provide back- or edge-mounted tile assemblies as standard with manufacturer unless otherwise indicated.

2.3 TILE PRODUCTS

A. Tile Type: Porcelain mosaic tile.
1. Manufacturers: Subject to compliance with requirements, provide product indicated on the Drawings.
2. Composition: Impervious natural clay or porcelain.
3. Module Size: As indicated on Drawings.
4. Tile Color and Pattern: As indicated on Drawings.
5. Grout Color: As indicated on Drawings.
6. Trim Units: Coordinated with sizes and coursing of adjoining flat tile where applicable and matching characteristics of adjoining flat tile. Provide shapes selected from manufacturer's standard shapes

B. Tile Type: Porcelain floor tile and porcelain wall tile.
1. Manufacturers: Subject to compliance with requirements, provide product indicated on the Drawings.
   a. Basis of Design:
      1) Crossville; Style, Civilization; Color, Currency CIV04; Size, 24"x24"
      2) Acceptable Alternative Floor Tiles
         a) Virginia Tile; Style, Area 51; Color, Steel MLS ARST
         b) Daltile; Style, Diplomacy; Color, Light Grey
2. Composition: Impervious natural clay or porcelain.
3. Module Size: As indicated on Drawings.
4. Tile Color and Pattern: As indicated on Drawings.
5. Grout Color: As indicated on Drawings.
6. Trim Units: Coordinated with sizes and coursing of adjoining flat tile where applicable and matching characteristics of adjoining flat tile. Provide shapes selected from manufacturer's standard shapes.

C. Tile Type: Glazed porcelain wall tile.
1. Manufacturers: Subject to compliance with requirements, provide product indicated on the Drawings.
2. Composition: Impervious natural clay or porcelain.
3. Module Size: As indicated on Drawings.
4. Tile Color and Pattern: As indicated on Drawings.
5. Grout Color: As indicated on Drawings.
6. Trim Units: Coordinated with sizes and coursing of adjoining flat tile where applicable and matching characteristics of adjoining flat tile. Provide shapes selected from manufacturer's standard shapes.

2.4 WATERPROOF MEMBRANE

A. General: Manufacturer's standard product that complies with ANSI A118.10 and is recommended by the manufacturer for the application indicated. Include reinforcement and accessories recommended by manufacturer.

B. Fabric-Reinforced, Fluid-Applied Membrane: System consisting of liquid-latex rubber or elastomeric polymer and continuous fabric reinforcement.
   1. Custom® 9240 Waterproofing And Anti-Fracture Membrane

   2. Laticrete Supercap, Llc, 9235 Waterproofing Membrane.

   3. Bostik: GoldPlus™Latex Waterproofing and Anti-Fracture Membrane

2.5 CRACK ISOLATION MEMBRANE

A. General: Manufacturer's standard product that complies with ANSI A118.12 for high performance and is recommended by the manufacturer for the application indicated. Include reinforcement and accessories recommended by manufacturer.

B. Fabric-Reinforced, Fluid-Applied Membrane: System consisting of liquid-latex rubber or elastomeric polymer and fabric reinforcement.
   1. Custom® 9240 Waterproofing And Anti-Fracture Membrane

   2. Laticrete Supercap, Llc, 9235 Waterproofing Membrane.

   3. Bostik: GoldPlus™Latex Waterproofing and Anti-Fracture Membrane

2.6 SETTING MATERIALS

A. Portland Cement Mortar (Thickset) Installation Materials: ANSI A108.02.

   1. Cleavage Membrane: Asphalt felt, ASTM D 226/D 226M, Type I (No. 15); or polyethylene sheeting, ASTM D 4397, 4.0 mils (0.1 mm) thick.
   2. Reinforcing Wire Fabric: Galvanized, welded-wire fabric, 2 by 2 inches (50.8 by 50.8 mm) by 0.062-inch (1.57-mm) diameter; comply with ASTM A 185/A 185M and ASTM A 82/A 82M, except for minimum wire size.

   3. Latex Additive: Manufacturer's standard water emulsion, serving as replacement for part or all of gaging water, of type specifically recommended by latex-additive manufacturer for use with field-mixed portland cement and aggregate mortar bed.

B. Modified Dry-Set Mortar (Thinset): ANSI A118.4
   1. Provide prepackaged, dry-mortar mix containing dry, redispersible, vinyl acetate or acrylic additive to which only water must be added at Project site.

2. For wall applications, provide mortar that complies with requirements for nonsagging mortar in addition to the other requirements in ANSI A118.4.

2.7 GROUT MATERIALS

A. Water-Cleanable Epoxy Grout: ANSI A118.3[, with a VOC content of 65 g/L or less].
   1. Provide product certified by manufacturer for intended us.
   2. Use: Interior Porcelain Tile

2.8 MISCELLANEOUS MATERIALS

A. Trowelable Underlayments and Patching Compounds: Latex-modified, portland cement-based formulation provided or approved by manufacturer of tile-setting materials for installations indicated.

B. Metal Edge Strips: Provide products indicated on Drawings.

C. Tile Cleaner: A neutral cleaner capable of removing soil and residue without harming tile and grout surfaces, specifically approved for materials and installations indicated by tile and grout manufacturers.

2.9 MIXING MORTARS AND GROUT

A. Mix mortars and grouts to comply with referenced standards and mortar and grout manufacturers' written instructions.

B. Add materials, water, and additives in accurate proportions.

C. Obtain and use type of mixing equipment, mixer speeds, mixing containers, mixing time, and other procedures to produce mortars and grouts of uniform quality with optimum performance characteristics for installations indicated.

PART 3 - EXECUTION

3.1 EXAMINATION

A. Examine substrates, areas, and conditions where tile will be installed, with Installer present, for compliance with requirements for installation tolerances and other conditions affecting performance of the Work.

   1. Verify that substrates for setting tile are firm; dry; clean; free of coatings that are incompatible with tile-setting materials, including curing compounds and other substances that contain soap, wax, oil, or silicone; and comply with flatness tolerances required by ANSI A108.01 for installations indicated.

2. Verify that concrete substrates for tile floors installed with [adhesives] [bonded mortar bed] [or] [thinset mortar] comply with surface finish requirements in ANSI A108.01 for installations indicated.

    a. Verify that surfaces that received a steel trowel finish have been mechanically scarified.
    b. Verify that protrusions, bumps, and ridges have been removed by sanding or grinding.

3. Verify that installation of grounds, anchors, recessed frames, electrical and mechanical units of work, and similar items located in or behind tile has been completed.
4. Verify that joints and cracks in tile substrates are coordinated with tile joint locations; if not coordinated, adjust joint locations in consultation with Architect.

B. Proceed with installation only after unsatisfactory conditions have been corrected.

3.2 PREPARATION

A. Fill cracks, holes, and depressions in concrete substrates for tile floors installed with thinset mortar with trowelable leveling and patching compound specifically recommended by tile-setting material manufacturer.

B. Where indicated, prepare substrates to receive waterproofing by applying a reinforced mortar bed that complies with ANSI A108.1A and is sloped 1/4 inch per foot (1:50) toward drains.

C. Blending: For tile exhibiting color variations, verify that tile has been factory blended and packaged so tile units taken from one package show same range of colors as those taken from other packages and match approved Samples. If not factory blended, either return to manufacturer or blend tiles at Project site before installing.

3.3 CERAMIC TILE INSTALLATION

A. Comply with TCNA's "Handbook for Ceramic, Glass, and Stone Tile Installation" for TCNA installation methods specified in tile installation schedules. Comply with parts of the ANSI A108 series "Specifications for Installation of Ceramic Tile" that are referenced in TCNA installation methods, specified in tile installation schedules, and apply to types of setting and grouting materials used.

1. For the following installations, follow procedures in the ANSI A108 series of tile installation standards for providing 95 percent mortar coverage:
    a. Tile floors in wet areas.
    b. Tile floors consisting of tiles 8 by 8 inches (200 by 200 mm) or larger.
    c. Tile floors consisting of rib-backed tiles.

B. Extend tile work into recesses and under or behind equipment and fixtures to form complete covering without interruptions unless otherwise indicated. Terminate work neatly at obstructions, edges, and corners without disrupting pattern or joint alignments.

C. Accurately form intersections and returns. Perform cutting and drilling of tile without marring visible surfaces. Carefully grind cut edges of tile abutting trim, finish, or built-in items for straight aligned joints. Fit tile closely to electrical outlets, piping, fixtures, and other penetrations so plates, collars, or covers overlap tile.

D. Provide manufacturer's standard trim shapes where necessary to eliminate exposed tile edges.

E. Where accent tile differs in thickness from field tile, vary setting-bed thickness so that tiles are flush.

F. Jointing Pattern: Lay tile in grid pattern unless otherwise indicated. Lay out tile work and center tile fields in both directions in each space or on each wall area. Lay out tile work to minimize the use of pieces that are less than half of a tile. Provide uniform joint widths unless otherwise indicated.

1. For tile mounted in sheets, make joints between tile sheets same width as joints within tile sheets so joints between sheets are not apparent in finished work.
2. Where adjoining tiles on floor, base, walls, or trim are specified or indicated to be same size, align joints.
3. Where tiles are specified or indicated to be whole integer multiples of adjoining tiles on floor, base, walls, or trim, align joints unless otherwise indicated.

G. Joint Widths: As indicated on drawings.

H. Lay out tile wainscots to dimensions indicated or to next full tile beyond dimensions indicated.

I. Expansion Joints: Provide expansion joints and other sealant-filled joints, including control, contraction, and isolation joints, where indicated. Form joints during installation of setting materials, mortar beds, and tile. Do not saw-cut joints after installing tiles.

1. Where joints occur in concrete substrates, locate joints in tile surfaces directly above them.

J. Metal Edge Strips: Install at locations indicated

3.4 WATERPROOFING INSTALLATION

A. Install waterproofing to comply with ANSI A108.13 and manufacturer's written instructions to produce waterproof membrane of uniform thickness that is bonded securely to substrate.

B. Allow waterproofing to cure and verify by testing that it is watertight before installing tile or setting materials over it.

3.5 CRACK ISOLATION MEMBRANE INSTALLATION

A. Install crack isolation membrane to comply with ANSI A108.17 and manufacturer's written instructions to produce membrane of uniform thickness that is bonded securely to substrate.

B. Allow crack isolation membrane to cure before installing tile or setting materials over it.

3.6 ADJUSTING AND CLEANING

A. Remove and replace tile that is damaged or that does not match adjoining tile. Provide new matching units, installed as specified and in a manner to eliminate evidence of replacement.

B. Cleaning: On completion of placement and grouting, clean all ceramic tile surfaces so they are free of foreign matter.

1. Remove grout residue from tile as soon as possible.
2. Clean grout smears and haze from tile according to tile and grout manufacturer's written instructions but no sooner than 10 days after installation. Use only cleaners recommended by tile and grout manufacturers and only after determining that cleaners are safe to use by testing on samples of tile and other surfaces to be cleaned. Protect metal surfaces and plumbing fixtures from effects of cleaning. Flush surfaces with clean water before and after cleaning.

3.7 PROTECTION

A. Protect installed tile work with kraft paper or other heavy covering during construction period to prevent staining, damage, and wear. If recommended by tile manufacturer, apply coat of neutral protective cleaner to completed tile walls and floors.

B. Prohibit foot and wheel traffic from tiled floors for at least seven days after grouting is completed.

C. Before final inspection, remove protective coverings and rinse neutral protective cleaner from tile surfaces.

3.8 INTERIOR CERAMIC TILE INSTALLATION SCHEDULE

A. Interior Floor Installations, Concrete Subfloor: TCNA F125-Full; thinset mortar on crack isolation membrane.

B. Interior Floor Installations, Wood Subfloor: TCNA F121 cement mortar bed (thickset) on waterproof membrane.

C. Interior Wall Installations, Metal Studs or Furring: TCNA W245 or TCNA W248; thinset mortar on glass-mat, water-resistant gypsum backer board.

END OF SECTION 093013

SECTION 09 65 19

RESILIENT TILE FLOORING – R1

PART 1 - GENERAL

1.1 RELATED DOCUMENTS

A. Drawings and general provisions of the Contract, including General and Supplementary Conditions and Division 01 Specification Sections, apply to this Section.

1.2 SUMMARY

A. Section Includes:

1. Solid vinyl floor tile.

1.3 ACTION SUBMITTALS

A. Product Data: For each type of product.

B. Shop Drawings: For each type of resilient floor tile.

1. Include floor tile layouts, edges, columns, doorways, enclosing partitions, built-in furniture, cabinets, and cutouts.

C. Samples: Full-size units of each color, texture, and pattern of floor tile required.

D. Product Schedule: For floor tile. Use same designations indicated on Drawings.

1.4 INFORMATIONAL SUBMITTALS

A. Qualification Data: For Installer.

1.5 CLOSEOUT SUBMITTALS

A. Maintenance Data: For each type of floor tile to include in maintenance manuals.

1.6 QUALITY ASSURANCE

A. Installer Qualifications: An entity that employs installers and supervisors who are competent in techniques required by manufacturer for floor tile installation and seaming method indicated.

1. Engage an installer who employs workers for this Project who are trained or certified by floor tile manufacturer for installation techniques required.

1.7 DELIVERY, STORAGE, AND HANDLING

A. Store floor tile and installation materials in dry spaces protected from the weather, with ambient temperatures maintained within range recommended by manufacturer, but not less than 50 deg F (10 deg C) or more than 90 deg F (32 deg C). Store floor tiles on flat surfaces.

1.8 FIELD CONDITIONS

A. Maintain ambient temperatures within range recommended by manufacturer, but not less than 70 deg F (21 deg C) or more than 95 deg F (35 deg C), in spaces to receive floor tile during the following periods:

1. 48 hours before installation.
2. During installation.
3. 48 hours after installation.

B. After installation and until Substantial Completion, maintain ambient temperatures within range recommended by manufacturer, but not less than 65 deg F (18.3 deg C) or more than 85 deg F (29.5 deg C).

C. Close spaces to traffic during floor tile installation.

D. Close spaces to traffic for 48 hours after floor tile installation.

E. Install floor tile after other finishing operations, including painting, have been completed.

PART 2 - PRODUCTS

2.1 PERFORMANCE REQUIREMENTS

A. Fire-Test-Response Characteristics: For resilient floor tile, as determined by testing identical products according to ASTM E 648 or NFPA 253 by a qualified testing agency.

1. Critical Radiant Flux Classification: Class I, not less than 0.45 W/sq. cm.

2.2 SOLID VINYL FLOOR TILE – RF-1

A. Basis of Design Product
1. Shaw Contract; Style, Thoughtful 4122V; Color, Crisp 22518; Size 23.62" x 23.62"

a. Alternate Manufacturers:
   1) Tarkett; Style, Contour Abstract; Color, Chenille Peppered 0974
   2) Mannington; Style, Amtico Signature Xpress; Color, Grid Zoom ALG301

B. Tile Standard: ASTM F 1700.

1. Class: Class III, Printed Film Vinyl Tile.
2. Type: A, Smooth Surface.

C. Thickness: 0.197 in | 5 mm;

D. Wear Layer Thickness: 20 mil | 0.51 mm

E. Size: As indicated on DrawingsRetain "Color and Patterns" Paragraph below if colors and patterns are not indicated in a separate schedule.

F. Colors and Patterns: As indicated on Drawings

2.3 INSTALLATION MATERIALS

A. Trowelable Leveling and Patching Compounds: Latex-modified, portland-cement-based or blended hydraulic-cement-based formulation provided or approved by floor tile manufacturer for applications indicated.

B. Adhesives: Water-resistant type recommended by floor tile and adhesive manufacturers to suit floor tile and substrate conditions indicated.

PART 3 - EXECUTION

3.1 EXAMINATION

A. Examine substrates, with Installer present, for compliance with requirements for maximum moisture content and other conditions affecting performance of the Work.

1. Verify that finishes of substrates comply with tolerances and other requirements specified in other Sections and that substrates are free of cracks, ridges, depressions, scale, and foreign deposits that might interfere with adhesion of floor tile.

B. Proceed with installation only after unsatisfactory conditions have been corrected.

3.2 PREPARATION

A. Prepare substrates according to floor tile manufacturer's written instructions to ensure adhesion of resilient products.

B. Concrete Substrates: Prepare according to ASTM F 710.

1. Verify that substrates are dry and free of curing compounds, sealers, and hardeners.
2. Remove substrate coatings and other substances that are incompatible with adhesives and that contain soap, wax, oil, or silicone, using mechanical methods recommended by floor tile manufacturer. Do not use solvents.
3. Alkalinity and Adhesion Testing: Perform tests recommended by floor tile manufacturer. Proceed with installation only after substrate alkalinity falls within range on pH scale recommended by manufacturer in writing, but not less than 5 or more than 9 pH.
4. Moisture Testing: Perform tests so that each test area does not exceed 200 sq. ft. (18.6 sq. m), and perform no fewer than three tests in each installation area and with test areas evenly spaced in installation areas.

    a. Anhydrous Calcium Chloride Test: ASTM F 1869. Proceed with installation only after substrates have maximum moisture-vapor-emission rate of 3 lb of water/1000 sq. ft. (1.36 kg of water/92.9 sq. m) in 24 hours.
    b. Relative Humidity Test: Using in-situ probes, ASTM F 2170. Proceed with installation only after substrates have a maximum 75 percent relative humidity level measurement.

C. Fill cracks, holes, and depressions in substrates with trowelable leveling and patching compound; remove bumps and ridges to produce a uniform and smooth substrate.

D. Do not install floor tiles until materials are the same temperature as space where they are to be installed.

1. At least 48 hours in advance of installation, move resilient floor tile and installation materials into spaces where they will be installed.

E. Immediately before installation, sweep and vacuum clean substrates to be covered by resilient floor tile.

3.3 FLOOR TILE INSTALLATION

A. Comply with manufacturer's written instructions for installing floor tile.

B. Lay out floor tiles from center marks established with principal walls, discounting minor offsets, so tiles at opposite edges of room are of equal width. Adjust as necessary to avoid using cut widths that equal less than one-half tile at perimeter.

1. Lay tiles in pattern indicated.

C. Match floor tiles for color and pattern by selecting tiles from cartons in the same sequence as manufactured and packaged, if so numbered. Discard broken, cracked, chipped, or deformed tiles.

1. Lay tiles in pattern indicated.

D. Scribe, cut, and fit floor tiles to butt neatly and tightly to vertical surfaces and permanent fixtures including built-in furniture, cabinets, pipes, outlets, and door frames.

E. Extend floor tiles into toe spaces, door reveals, closets, and similar openings. Extend floor tiles to center of door openings.

F. Maintain reference markers, holes, and openings that are in place or marked for future cutting by repeating on floor tiles as marked on substrates. Use chalk or other nonpermanent marking device.

G. Install floor tiles on covers for telephone and electrical ducts, building expansion-joint covers, and similar items in installation areas. Maintain overall continuity of color and pattern between pieces of tile installed on covers and adjoining tiles. Tightly adhere tile edges to substrates that abut covers and to cover perimeters.

H. Adhere floor tiles to substrates using a full spread of adhesive applied to substrate to produce a completed installation without open cracks, voids, raising and puckering at joints, telegraphing of adhesive spreader marks, and other surface imperfections.

3.4 CLEANING AND PROTECTION

A. Comply with manufacturer's written instructions for cleaning and protecting floor tile.

B. Perform the following operations immediately after completing floor tile installation:

1. Remove adhesive and other blemishes from surfaces.
2. Sweep and vacuum surfaces thoroughly.
3. Damp-mop surfaces to remove marks and soil.

C. Protect floor tile from mars, marks, indentations, and other damage from construction operations and placement of equipment and fixtures during remainder of construction period.

D. Cover floor tile until Substantial Completion.

END OF SECTION 09 65 19

SECTION 09 68 13

TILE CARPETING – R1

PART 1 - GENERAL

1.1 RELATED DOCUMENTS

A. Drawings and general provisions of the Contract, including General and Supplementary Conditions and Division 01 Specification Sections, apply to this Section.

1.2 SUMMARY

A. Section includes modular carpet tile.

B. Related Requirements:

1. Section 024119 "Selective Demolition" for removing existing floor coverings.
2. Section 096513 "Resilient Base and Accessories"

1.3 ACTION SUBMITTALS

A. Product Data: For each type of product.

1. Include manufacturer's written data on physical characteristics, durability, and fade resistance.
2. Include manufacturer's written installation recommendations for each type of substrate.

B. Shop Drawings: For carpet tile installation, plans showing the following:

1. Columns, doorways, enclosing walls or partitions, built-in cabinets, and locations where cutouts are required in carpet tiles.
2. Carpet tile type, color, and dye lot.
3. Type of subfloor.
4. Type of installation.
5. Pattern of installation.
6. Pattern type, location, and direction.
7. Pile direction.
8. Type, color, and location of insets and borders.
9. Type, color, and location of edge, transition, and other accessory strips.
10. Transition details to other flooring materials.

C. Samples: For each of the following products and for each color and texture required. Label each Sample with manufacturer's name, material description, color, pattern, and designation indicated on Drawings and in schedules.

1. Carpet Tile: Full-size Sample.

D. Product Schedule: For carpet tile. Use same designations indicated on Drawings.

1.4 INFORMATIONAL SUBMITTALS

A. Qualification Data: For Installer.

B. Product Test Reports: For carpet tile, for tests performed by a qualified testing agency.

C. Sample Warranty: For special warranty.

1.5 CLOSEOUT SUBMITTALS

A. Maintenance Data: For carpet tiles to include in maintenance manuals. Include the following:

1. Methods for maintaining carpet tile, including cleaning and stain-removal products and procedures and manufacturer's recommended maintenance schedule.
2. Precautions for cleaning materials and methods that could be detrimental to carpet tile.

1.6 MAINTENANCE MATERIAL SUBMITTALS

A. Furnish extra materials, from the same product run, that match products installed and that are packaged with protective covering for storage and identified with labels describing contents.

1. Carpet Tile: Full-size units equal to five percent of amount installed for each type indicated, but not less than one full box of each type, color, and pattern of floor tile installed.

1.7 QUALITY ASSURANCE

A. Installer Qualifications: An experienced installer who is certified by the International Certified Floorcovering Installers Association at the **Master II** certification level.

1.8 DELIVERY, STORAGE, AND HANDLING

A. Comply with CRI's "CRI Carpet Installation Standard."

1.9 FIELD CONDITIONS

A. Comply with CRI's "CRI Carpet Installation Standard" for temperature, humidity, and ventilation limitations.

B. Environmental Limitations: Do not deliver or install carpet tiles until spaces are enclosed and weathertight, wet-work in spaces is complete and dry, and ambient temperature and humidity

conditions are maintained at levels planned for building occupants during the remainder of the construction period.

C. Do not install carpet tiles over concrete slabs until slabs have cured and are sufficiently dry to bond with adhesive and concrete slabs have pH range recommended by carpet tile manufacturer.

D. Where demountable partitions or other items are indicated for installation on top of carpet tiles, install carpet tiles before installing these items.

1.10 WARRANTY

A. Special Warranty for Carpet Tiles: Manufacturer agrees to repair or replace components of carpet tile installation that fail in materials or workmanship within specified warranty period.

1. Warranty does not include deterioration or failure of carpet tile due to unusual traffic, failure of substrate, vandalism, or abuse.
2. Failures include, but are not limited to, the following:

a. More than 10 percent edge raveling, snags, and runs.
b. Dimensional instability.
c. Excess static discharge.
d. Loss of tuft-bind strength.
e. Loss of face fiber.
f. Delamination.

3. Warranty Period: 15 years from date of Substantial Completion.

PART 2 - PRODUCTS

2.1 CARPET TILE – CPT-1

A. Basis of Design:
1) Shaw Contract; Style, Collective IV 5T441 TILE ; Color, Warm Grey 38518
2) Acceptable Alternative Floor Tiles
a) Interface; Style, Open Air 420; Color, 107059 Flannel
b) Tarkett; Style, Bindery 11501; Color, Graph Paper 25605

~~B. Pattern: As indicated on drawings~~

C. Backing System: GlasBac.

~~D. Size: As indicated on drawings~~

2.2 INSTALLATION ACCESSORIES

A. Trowelable Leveling and Patching Compounds: Latex-modified, hydraulic-cement-based formulation provided or recommended by carpet tile manufacturer.

B. Adhesives: Water-resistant, mildew-resistant, nonstaining, pressure-sensitive type to suit products and subfloor conditions indicated, that comply with flammability requirements for installed carpet tile, and are recommended by carpet tile manufacturer for releasable installation.

PART 3 - EXECUTION

3.1 EXAMINATION

A. Examine substrates, areas, and conditions, with Installer present, for compliance with requirements for maximum moisture content, alkalinity range, installation tolerances, and other conditions affecting carpet tile performance.

B. Examine carpet tile for type, color, pattern, and potential defects.

C. Wood Subfloors: Verify the following:

1. Underlayment over subfloor complies with requirements specified in Section 061600 "Sheathing."
2. Underlayment surface is free of irregularities and substances that may interfere with adhesive bond or show through surface.

D. Proceed with installation only after unsatisfactory conditions have been corrected.

3.2 PREPARATION

A. General: Comply with CRI's "Carpet Installation Standards" and with carpet tile manufacturer's written installation instructions for preparing substrates indicated to receive carpet tile.

B. Use trowelable leveling and patching compounds, according to manufacturer's written instructions, to fill cracks, holes, depressions, and protrusions in substrates. Fill or level cracks, holes and depressions 1/8 inch (3 mm) wide or wider, and protrusions more than 1/32 inch (0.8 mm) unless more stringent requirements are required by manufacturer's written instructions.

C. Broom and vacuum clean substrates to be covered immediately before installing carpet tile.

3.3 INSTALLATION

A. General: Comply with CRI's "CRI Carpet Installation Standard," Section 18, "Modular Carpet" and with carpet tile manufacturer's written installation instructions.

B. Installation Method: Glue down; install every tile with full-spread, releasable, pressure-sensitive adhesive

C. Maintain dye-lot integrity. Do not mix dye lots in same area.

D. Maintain pile-direction patterns recommended in writing by carpet tile manufacturer.

E. Cut and fit carpet tile to butt tightly to vertical surfaces, permanent fixtures, and built-in furniture including cabinets, pipes, outlets, edgings, thresholds, and nosings. Bind or seal cut edges as recommended by carpet tile manufacturer.

F. Extend carpet tile into toe spaces, door reveals, closets, open-bottomed obstructions, removable flanges, alcoves, and similar openings.

G. Maintain reference markers, holes, and openings that are in place or marked for future cutting by repeating on carpet tile as marked on subfloor. Use nonpermanent, nonstaining marking device.

H. Install pattern parallel to walls and borders.

3.4 CLEANING AND PROTECTION

A. Perform the following operations immediately after installing carpet tile:

1. Remove excess adhesive and other surface blemishes using cleaner recommended by carpet tile manufacturer.
2. Remove yarns that protrude from carpet tile surface.
3. Vacuum carpet tile using commercial machine with face-beater element.

B. Protect installed carpet tile to comply with CRI's "Carpet Installation Standard," Section 20, "Protecting Indoor Installations."

C. Protect carpet tile against damage from construction operations and placement of equipment and fixtures during the remainder of construction period. Use protection methods indicated or recommended in writing by carpet tile manufacturer.

END OF SECTION 09 68 13

SECTION 10 51 13

METAL LOCKERS

PART 1 - GENERAL

1.1 RELATED DOCUMENTS

A. Drawings and general provisions of the Contract, including General and Supplementary Conditions and Division 01 Specification Sections, apply to this Section.

1.2 SUMMARY

A. Section Includes:
1. Heavy-duty single tier metal lockers.
2. Heavy-duty double tier metal lockers.

1.3 PREINSTALLATION MEETINGS

A. Preinstallation Conference: Conduct conference at project site.

1.4 SUBMITTALS

A. Product Data: For each type of product.

1. Include construction details, material descriptions, dimensions of individual components and profiles, and finishes for each type of metal locker[and bench].

B. Shop Drawings: For metal lockers.

1. Include plans, elevations, sections, and attachment details.
2. Show locker trim and accessories.
3. Include locker identification system and numbering sequence.

C. Samples: For each color specified, in manufacturer's standard size.

D. Samples for Initial Selection: Manufacturer's color charts showing the full range of colors available.

E. Samples for Verification: For the following products, in manufacturer's standard size:

F. Product Schedule: For lockers.

G. Qualification Data: For Installer.

H. Sample Warranty: For special warranty.

I. Maintenance Data: For adjusting, repairing, and replacing locker doors and latching mechanisms to include in maintenance manuals.

1.5 MAINTENANCE MATERIAL SUBMITTALS

A. Furnish extra materials that match products installed and that are packaged with protective covering for storage and identified with labels describing contents.

1. The following metal locker hardware items equal to 10 percent of amount installed for each type and finish installed, but no fewer than two units:

a. Pad Lock Hardware
b. Blank identification plates.
c. Hooks.

1.6 DELIVERY, STORAGE, AND HANDLING

A. Do not deliver metal lockers until spaces to receive them are clean, dry, and ready for their installation.

1.7 FIELD CONDITIONS

A. Field Measurements: Verify actual dimensions of recessed openings by field measurements before fabrication.

1.8 COORDINATION

A. Coordinate sizes and locations of bases for metal lockers.

B. Coordinate sizes and locations of framing, blocking, furring, reinforcements, and other related units of work specified in other Sections to ensure that metal lockers can be supported and installed as indicated.

1.9 WARRANTY

A. Special Warranty: Manufacturer agrees to repair or replace components of metal lockers that fail in materials or workmanship, excluding finish, within specified warranty period.

1. Failures include, but are not limited to, the following:

a. Structural failures.
b. Faulty operation of latches and other door hardware.

2. Damage from deliberate destruction and vandalism is excluded.

3. Warranty Period for Welded Metal Lockers: 10 years from date of Substantial Completion.

PART 2 - PRODUCTS

2.1 MANUFACTURERS

A. Source Limitations: Obtain metal lockers and accessories from single source from single locker manufacturer.

B. Basis of Design:
   1. ASI Traditional Plus Collection
      a. Color Black #11
      b. 12" wide x 18" deep
      c. 6" base and angled top
      d. Single tier and double tier – see drawings for designation
      e. Digital keypad lock
   2. Acceptable alternate manufacturers
      a. Penco
      b. Lyon

2.2 PERFORMANCE REQUIREMENTS

A. Accessibility Standard: For lockers indicated to be accessible, comply with applicable provisions in the USDOJ's "2010 ADA Standards for Accessible Design".

2.3 WELDED CORRIDOR LOCKERS

A. Doors: One piece; fabricated from 0.075-inch (1.90-mm) nominal-thickness steel sheet; formed into channel shape with double bend at vertical edges and with right-angle single bend at horizontal edges.

   1. Reinforcement: Manufacturer's standard reinforcing angles, channels, or stiffeners for doors more than 15 inches (381 mm) wide; welded to inner face of doors.
   2. Door Style: Vented panel as follows:

      a. Louvered Vents: No fewer than six louver openings at top and bottom for single-tier, and three louver openings at top and bottom for double-tier lockers.

B. Body: Assembled by welding body components together. Fabricate from unperforated steel sheet with thicknesses as follows:

   1. Tops, Bottoms, and Sides: 0.060-inch (1.52-mm) nominal thickness.
   2. Backs: 0.048-inch (1.21-mm) nominal thickness.
   3. Shelves: 0.060-inch (1.52-mm) nominal thickness, with double bend at front and single bend at sides and back.

C. Frames: Channel formed; fabricated from 0.060-inch (1.52-mm) nominal-thickness steel sheet; lapped and factory welded at corners; with top and bottom main frames factory welded into vertical main frames. Form continuous, integral, full-height door strikes on vertical main frames.

1. Cross Frames between Tiers: Channel formed and fabricated from same material as main frames; welded to vertical main frames.

D. Hinges: Welded to door and attached to door frame with no fewer than two factory-installed rivets per hinge that are completely concealed and tamper resistant when door is closed; fabricated to swing 180 degrees[; self-closing].

1. Knuckle Hinges: Steel, full loop, five or seven knuckles, tight pin; minimum 2 inches (51 mm) high. Provide no fewer than three hinges for each door more than 42 inches (1067 mm) high.

E. Recessed Door Handle and Latch: Stainless-steel cup with integral door pull, recessed so locking device does not protrude beyond door face; pry and vandal resistant.

1. Multipoint Latching: Finger-lift latch control designed for use with built-in combination locks or padlocks; positive automatic latching and prelocking.

a. Latch Hooks: Equip doors 48 inches (1219 mm) and higher with three latch hooks and doors less than 48 inches (1219 mm) high with two latch hooks; fabricated from 0.120-inch (3.04-mm) nominal-thickness steel sheet; welded to full-height door strikes; with resilient silencer on each latch hook.

2. Single-Point Latching: Nonmoving latch hook designed to engage bolt of built-in combination or cylinder lock.

a. Latch Hook: Equip each door with one latch hook, fabricated from 0.120-inch (3.04-mm) nominal-thickness steel sheet; welded midway up full-height door strike; with resilient silencer.

F. Locks: Digital keypad locks.

G. Identification Plates: Manufacturer's standard, etched, embossed, or stamped aluminum plates, with numbers and letters at least 3/8 inch (9 mm) high.

H. Hooks: Manufacturer's standard ball-pointed, aluminum or steel; zinc plated.

I. Legs: 6 inches (152 mm) high; formed by extending vertical frame members, or fabricated from 0.075-inch (1.90-mm) nominal-thickness steel sheet; welded to bottom of locker.

1. Closed Front and End Bases: Fabricated from 0.036-inch (0.91-mm) nominal-thickness steel sheet.

J. Continuous Zee Base: Fabricated from manufacturer's standard thickness steel sheet.

1. Height: 4 inches (102 mm).

K. Continuous Sloping Tops: Fabricated from 0.048-inch (1.21-mm) nominal-thickness steel sheet, with a pitch of approximately 20 degrees.

1. Closures: Vertical end type.

L. Recess Trim: Fabricated from 0.048-inch (1.21-mm) nominal-thickness steel sheet.

M. Filler Panels: Fabricated from 0.048-inch (1.21-mm) nominal-thickness steel sheet.

N. Boxed End Panels: Fabricated from 0.048-inch (1.21-mm) nominal-thickness steel sheet.

O. Finished End Panels: Fabricated from 0.024-inch (0.61-mm) nominal-thickness steel sheet to cover unused penetrations and fasteners, except for perimeter fasteners, at exposed ends of nonrecessed metal lockers; finished to match lockers.

P. Materials:

1. Cold-Rolled Steel Sheet: ASTM A 1008/A 1008M, Commercial Steel (CS), Type B, suitable for exposed applications.

Q. Finish: Baked enamel or powder coat.

1. Color: As selected by Architect from manufacturer's full range.

2.4 LOCKS

A. Digital Keypad Lock: Battery-powered electronic keypad with reprogrammable manager and owner codes that override access. Three consecutive incorrect code entries shall disable lock for three minutes.

1. Designed for permanently assigned access via entry of user's four-digit code.
2. Designed for shared or temporary access by multiple users, with user-defined code to lock and unlock. Provide LED indicator to show when lock is in use.

2.5 FABRICATION

A. Fabricate metal lockers square, rigid, without warp, and with metal faces flat and free of dents or distortion. Make exposed metal edges safe to touch and free of sharp edges and burrs.

1. Form body panels, doors, shelves, and accessories from one-piece steel sheet unless otherwise indicated.
2. Provide fasteners, filler plates, supports, clips, and closures as required for complete installation.

B. Fabricate each metal locker with an individual door and frame; individual top, bottom, and back; and common intermediate uprights separating compartments.

C. Equipment: Provide each locker with an identification plate and the following equipment:

1. Single-Tier Units: Shelf, one double-prong ceiling hook, and two single-prong wall hooks.
2. Double-Tier Units: One double-prong ceiling hook and two single-prong wall hooks.

D. Welded Construction: Factory preassemble metal lockers by welding all joints, seams, and connections; with no bolts, nuts, screws, or rivets used in assembly of main locker groups. Factory weld main locker groups into one-piece structures. Grind exposed welds smooth and flush.

E. Accessible Lockers: Fabricate as follows:

1. Locate bottom shelf no lower than 15 inches (381 mm) above the floor.
2. Where hooks, coat rods, or additional shelves are provided, locate no higher than 48 inches (1219 mm) above the floor.

F. Continuous Zee Base: Fabricated in lengths as long as practical to enclose base and base ends; finished to match lockers.

G. Continuous Sloping Tops: Fabricated in lengths as long as practical, without visible fasteners at splice locations; finished to match lockers.

1. Sloping-top corner fillers, mitered.

H. Recess Trim: Fabricated with minimum 2-1/2-inch (64-mm) face width and in lengths as long as practical; finished to match lockers.

I. Filler Panels: Fabricated in an unequal leg angle shape; finished to match lockers. Provide slip-joint filler angle formed to receive filler panel.

J. Boxed End Panels: Fabricated with 1-inch- (25-mm-) wide edge dimension, and designed for concealing fasteners and holes at exposed ends of nonrecessed metal lockers; finished to match lockers.

1. Provide one-piece panels for double-row (back-to-back) locker ends.

K. Finished End Panels: Fabricated to conceal unused penetrations and fasteners, except for perimeter fasteners, at exposed ends of nonrecessed metal lockers; finished to match lockers.

1. Provide one-piece panels for double-row (back-to-back) locker ends.

L. Center Dividers: Full-depth, vertical partitions between bottom and shelf; finished to match lockers.

2.6 ACCESSORIES

A. Fasteners: Zinc- or nickel-plated steel, slotless-type, exposed bolt heads; with self-locking nuts or lock washers for nuts on moving parts.

B. Anchors: Material, type, and size required for secure anchorage to each substrate.

1. Provide nonferrous-metal or hot-dip galvanized anchors and inserts on inside face of exterior walls, and elsewhere as indicated, for corrosion resistance.
2. Provide toothed-steel or lead expansion sleeves for drilled-in-place anchors.

PART 3 - EXECUTION

3.1 EXAMINATION

A. Examine walls and floors or support bases, with Installer present, for compliance with requirements for installation tolerances and other conditions affecting performance of the Work.

B. Prepare written report, endorsed by Installer, listing conditions detrimental to performance of the Work.

C. Proceed with installation only after unsatisfactory conditions have been corrected.

3.2 INSTALLATION

A. Install lockers level, plumb, and true; shim as required, using concealed shims.

1. Anchor locker runs at ends and at intervals recommended by manufacturer, but not more than 36 inches (910 mm) o.c. Using concealed fasteners, install anchors through backup reinforcing plates, channels, or blocking as required to prevent metal distortion.
2. Anchor single rows of metal lockers to walls near top and bottom of lockers.

B. Welded Lockers: Connect groups together with manufacturer's standard fasteners, with no exposed fasteners on face frames.

C. Equipment:

1. Attach hooks with at least two fasteners.
2. Attach door locks on doors using security-type fasteners.
3. Identification Plates: Identify metal lockers with identification indicated on Drawings.

a. Attach plates to each locker door, near top, centered, with at least two aluminum rivets.

D. Trim: Fit exposed connections of trim, fillers, and closures accurately together to form tight, hairline joints, with concealed fasteners and splice plates.

1. Attach recess trim to recessed metal lockers with concealed clips.
2. Attach filler panels with concealed fasteners. Locate filler panels where indicated on Drawings.
3. Attach sloping-top units to metal lockers, with closures at exposed ends.
4. Attach boxed end panels using concealed fasteners to conceal exposed ends of nonrecessed metal lockers.
5. Attach finished end panels using fasteners only at perimeter to conceal exposed ends of nonrecessed metal lockers.

3.3 ADJUSTING

A. Clean, lubricate, and adjust hardware. Adjust doors and latches to operate easily without binding. Verify that integral locking devices operate properly.

3.4 PROTECTION

A. Protect metal lockers from damage, abuse, dust, dirt, stain, or paint. Do not permit use during construction.

B. Touch up marred finishes, or replace metal lockers that cannot be restored to factory-finished appearance. Use only materials and procedures recommended or furnished by locker manufacturer.

END OF SECTION 10 51 13

SECTION 12 36 19

WOOD COUNTERTOPS – R1

PART 1 - GENERAL

1.1 RELATED DOCUMENTS

A. Drawings and general provisions of the Contract, including General and Supplementary Conditions and Division 01 Specification Sections, apply to this Section.

1.2 SUMMARY

A. Section Includes:

1. Wood countertops.
2. Shop finishing of wood countertops.

1.3 ACTION SUBMITTALS

A. Product Data: For each type of product.

1. Include data for fire-retardant treatment from chemical-treatment manufacturer and certification by treating plant that treated materials comply with requirements.

B. Shop Drawings: For wood countertops.

1. Include plans, sections, details, and attachments to other work. Detail fabrication and installation, including field joints.
2. Show locations and sizes of cutouts and holes for items installed in wood countertops.
3. Apply AWI Quality Certification Program label to Shop Drawings.

C. Samples for Verification: For the following:

1. Lumber for Transparent Finish: Not less than 5 inches (125 mm) wide by 12 inches (300 mm) long.

1.4 INFORMATIONAL SUBMITTALS

A. Coordinate "Qualification Data" Paragraph below with qualification requirements in Section 014000 "Quality Requirements" and as may be supplemented in "Quality Assurance" Article.

1.5 Comply with requirements in Section 06 40 23 "Common Work Results for Interior Architectural Woodwork".

1.6 DELIVERY, STORAGE, AND HANDLING

A. Deliver countertops only after casework and supports on which they will be installed have been completed in installation areas.

B. Store countertops in areas where environmental conditions comply with requirements specified in "Field Conditions" Article.

C. Keep finished surfaces of countertops covered with protective covering during handling and installation.

1.7 QUALITY ASSURANCE

A. Comply with requirements in Section 06 40 23 "Common Work Results for Interior Architectural Woodwork".

1.8 FIELD CONDITIONS

A. Comply with requirements in Section 06 40 23 "Common Work Results for Interior Architectural Woodwork".

1.9 COORDINATION

A. Coordinate locations of utilities that will penetrate countertops.

PART 2 - PRODUCTS

2.1 WOOD COUNTERTOPS

A. Quality Standard: Unless otherwise indicated, comply with the "Architectural Woodwork Standards" for grades of wood countertops indicated for construction, finishes, installation, and other requirements.

1. Provide inspections of fabrication and installation together with labels and certificates from [AWI] [WI] certification program indicating that countertops comply with requirements of grades specified.
2. The Contract Documents contain requirements that are more stringent than the referenced quality standard. Comply with requirements of Contract Documents in addition to those of the referenced quality standard.

B. Grade: Custom.

C. Butcher-Block Countertops: For transparent finish. Fabricated from narrow strips of lumber glued together and arranged for random mix of color and grain.

1. Wood Species: White Oak
2. Strip Thickness: 1-1/2 inches (38 mm).

D. Wood-Veneer Countertops: For transparent finish. Fabricated from wood veneer laminated over panel-product core.

1. Wood Species: Knotty Hickory, Transparent Satin Finish
2. Wood Cut: Plain sawn
3. Veneer Manufacturer: Wisewood Veneer or equal.
   a. Knotty Hickory, Clear Color, Satin Finish
   b. Cut from single 4x8 sheets
4. Edge Treatment: Solid wood matching face for species and cut.
5. Core Material: Fire-retardant-treated plywood at counter top, Fire-retardant particleboard.

2.2 WOOD MATERIALS

A. Wood Products: Provide materials that comply with requirements of referenced quality standard for each type of wood countertop and quality grade specified unless otherwise indicated.

1. Do not use plain-sawn softwood lumber with exposed, flat surfaces more than 3 inches (75 mm) wide.
2. Wood Moisture Content: 5 to 10 percent.

B. Composite Wood and Agrifiber Products: Provide materials that comply with requirements of referenced quality standard for each type of countertop and quality grade specified unless otherwise indicated.

1. Composite Wood Products: Products shall be made using ultra-low-emitting formaldehyde resins as defined in the California Air Resources Board's "Airborne Toxic
   Control Measure to Reduce Formaldehyde Emissions from Composite Wood Products" or shall be made with no added formaldehyde.
2. MDF: Medium-density fiberboard, ANSI A208.2, Grade 130.
3. Particleboard: ANSI A208.1, Grade M-2-Exterior Glue.
4. Straw-Based Particleboard: ANSI A208.1, Grade M-2, except for density.
5. Softwood Plywood: DOC PS 1.

2.3 FABRICATION

A. Sand fire-retardant-treated wood lightly to remove raised grain on exposed surfaces before fabrication.

B. Fabricate wood countertops to dimensions, profiles, and details indicated. Ease edges to radius indicated for the following:

1. Solid-Wood (Lumber) Members: 1/16 inch (1.5 mm) unless otherwise indicated.
2. Edges of Members More Than 3/4 Inch (19 mm) Thick: 1/8 inch (3 mm).

C. Complete fabrication, including assembly and hardware application, to maximum extent possible before shipment to Project site. Disassemble components only as necessary for shipment and installation. Where necessary for fitting at site, provide ample allowance for scribing, trimming, and fitting.

1. Notify Architect seven days in advance of the dates and times countertop fabrication will be complete.
2. Trial fit assemblies at fabrication shop that cannot be shipped completely assembled. Install dowels, screws, bolted connectors, and other fastening devices that can be removed after trial fitting. Verify that various parts fit as intended and check measurements of assemblies against field measurements before disassembling for shipment.

D. Shop cut openings to maximum extent possible to receive appliances, plumbing fixtures, electrical work, and similar items. Locate openings accurately and use templates or roughing-in diagrams to produce accurately sized and shaped openings. Sand edges of cutouts to remove splinters and burrs.

1. Seal edges of openings in countertops with a coat of varnish.

2.4 SHOP FINISHING

A. General: Finish wood countertops at fabrication shop as specified in this Section. Defer only final touchup, cleaning, and polishing until after installation.

B. Finish Materials: Use finish materials that comply with the testing and product requirements of the California Department of Public Health's "Standard Method for the Testing and Evaluation of Volatile Organic Chemical Emissions from Indoor Sources Using Environmental Chambers."

C. Shop Priming: Shop apply the prime coat including backpriming, if any, for items specified to be field finished. Refer to Section 099300 "Staining and Transparent Finishing" for material and application requirements.

D. Preparation for Finishing: Comply with referenced quality standard for sanding, filling countersunk fasteners, sealing concealed surfaces, and similar preparations for finishing wood countertops, as applicable to each unit of work.

1. Backpriming: Apply one coat of sealer or primer, compatible with finish coats, to concealed surfaces of wood countertops. Apply two coats to end-grain surfaces.

E. Transparent Finish:

1. Grade: Custom.
2. Finish: System – three coats of water-based polyurethane.
3. Washcoat for Closed-Grain Woods: Apply washcoat sealer to woodwork made from closed-grain wood before staining and finishing.
4. Staining: None required.
5. Open Finish for Open-Grain Woods: Do not apply filler to open-grain woods.
6. Filled Finish for Open-Grain Woods: After staining, apply washcoat sealer and allow to dry. Apply paste wood filler and wipe off excess. Tint filler to match stained wood.
7. Sheen: Satin, 31-45 gloss units measured on 60-degree gloss meter per ASTM D 523.

PART 3 - EXECUTION

3.1 PREPARATION

A. Before installation, condition wood countertops to average prevailing humidity conditions in installation areas for not less than 72 hours.

B. Before installing wood countertops, examine shop-fabricated work for completion and complete work as required, including removal of packing and application of backpriming.

3.2 INSTALLATION

A. Grade: Install wood countertops to comply with same grade as item to be installed.

B. Assemble wood countertops and complete fabrication at Project site to the extent that it was not completed in the shop.

C. Field Jointing: Where possible, make in the same manner as shop jointing, using dowels, splines, adhesives, and fasteners recommended by manufacturer. Prepare edges to be joined in shop so Project-site processing of top and edge surfaces is not required. Locate field joints where shown on Shop Drawings.

1. Secure field joints in countertops with concealed clamping devices located within 6 inches (150 mm) of front and back edges and at intervals not exceeding 24 inches (600 mm). Tighten according to manufacturer's written instructions to exert a constant, heavy-clamping pressure at joints.

D. Scribe and cut wood countertops to fit adjoining work, refinish cut surfaces, and repair damaged finish at cuts.

E. Fire-Retardant-Treated Wood: Handle, store, and install fire-retardant-treated wood to comply with chemical-treatment manufacturer's written instructions, including those for adhesives used to install woodwork.

F. Countertop Installation: Anchor securely by screwing through corner blocks of base cabinets or other supports into underside of countertop.

1. Install countertops level and true in line. Use concealed shims as required to maintain not more than a 1/8-inch-in-96-inches (3-mm-in-2400-mm)variation from a straight, level plane.
2. Seal joints between countertop, and joints where countertop abuts walls with sealant specified in Section 079200 "Joint Sealants."

G. Shop Finishes: Touch up finishing after installation of wood countertops.

1. Apply specified finish coats, including stains and paste fillers if any, to exposed surfaces where only sealer/prime coats are shop applied.

H. Field Finishing: Section 099300 "Staining and Transparent Finishing" for finishing installed wood countertops.

3.3 ADJUSTING AND CLEANING

A. Repair damaged and defective wood countertops, where possible, to eliminate functional and visual defects. Where not possible to repair, replace countertops. Adjust joinery for uniform appearance.

B. Clean wood countertops on exposed and semiexposed surfaces. Touch up shop-applied finishes to restore damaged or soiled areas.

C. Protection: Provide Kraft paper or other suitable covering over countertop surfaces, taped to underside of countertop at a minimum of 48 inches (1220 mm) o.c. Remove protection at Substantial Completion.

END OF SECTION 12 36 19

DOORS, FRAMES & FINISH HARDWARE

Distributed By:

7505 Freedom Ave NW
North Canton, OH 44720
Phone: 330-494-7255 Fax: 330-494-7284
www.clevelandvicon.com

Prepared By: Ron Mizer, AHC

Date: December 4, 2023

PROJECT: Coshocton Collaborative (SPEC)

ARCHITECT: Sol Harris/Day Architecture
6677 Frank Avenue Nw
North Canton, Ohio 44720
Phone:(330) 493-3722
Fax:(330) 493-5777

Opening List

Opening	Hdw Set	Hdw Heading	Opening Label	Door Type	Frame Type
000.1	02	02			
000.2	07	07			
000.3	02	02			
000.4	02	02			
000.5	02	02			
000.6	02	02			
000.7	02	02			
000.8	02	02			
000.9	02	02			
001.1	01	01			
001.2	01	01			
002.1	01	01			
003.1	09	09			
004.1	01	01			
005.1	01	01			
006.1	09	09			
006.2	02	02			
007.1	09	09			
007.2	02	02			
008.1	09	09			
008.2	02	02			
009.1	07	07			
009.2	02	02			
010.1	09	09			
011.1	09	09			
012.1	10	10			
013.1	10	10			
014.1	07	07			
015.1	06	06			
016.1	07	07			
016.2	01	01			
017.1	01	01			
018.1	03	03			
020.1	08	08			
021.1	07	07			
100.1	06	06			
100.2	06	06			
100.3	06	06			
100.4	01	01			
101.1	11	11			
102.1	11	11			
104.1	11	11			
105.1	11	11			
106.1	04	04			
106.2	02	02			
106.3	12	12			
107.1	14	14			

Opening	Hdw Set	Hdw Heading	Opening Label	Door Type	Frame Type
107.2	15	15			
108.1	13	13			
108.2	13	13			
108.3	01	01			
109.1	12	12			
110.2	01	01			
111.1	01	01			
111.2	06	06			
112.1	04	04			
112.3	12	12			
113.1	02	02			
114.1	01	01			
11C.1	04	04			
200.1	03	03			
202.1	01	01			
203.1	12	12			
203.2	12	12			
204.1	16	16			
204.2	16	16			
205.1	16	16			
205.2	16	16			
206.1	16	16			
207.1	16	16			
208.1	16	16			
209.1	16	16			
210.1	17	17			
210.2	16	16			
211.1	12	12			
212.1	10	10			
213.1	11	11			
214.1	11	11			
215.1	01	01			
216.1	17	17			
216.2	17	17			
217.1	17	17			
217.2	18	18			
301.1	03	03			
301.2	01	01			
303.1	17	17			
303.2	02	02			
304.1	17	17			
304.2	18	18			
305.1	17	17			
305.2	17	17			
306.1	19	19			
307.1	17	17			
308.1	17	17			
309.1	17	17			
310.1	19	19			

Opening	Hdw Set	Hdw Heading	Opening Label	Door Type	Frame Type
311.1	17	17			
311.2	01	01			
313.1	11	11			
314.1	11	11			
315.1	17	17			
317.1	17	17			
317.2	02	02			
S0.0	03	03			
S0.1	02	02			
S0.3	02	02			
S0.4	02	02			
S0.5	02	02			
S1.3	04	04			
SA.1	05	05			
SA.2	05	05			
SA.3	02	02			
SA.4	03	03			
SA.5	03	03			
SA.6	02	02			
SA.7	02	02			
SA.8	02	02			
SB.1	04	04			
SB.2	02	02			
SB.3	02	02			
SC.0	03	03			
SC.1	02	02			
SC.2	04	04			
SC.2X	04	04			
SC.3	02	02			
SC.4	02	02			
SC.5	02	02			
SC.6	02	02			
SC.7	02	02			
SE.1	03	03			
SE.2	03	03			
SE.4	03	03			
SE.5	03	03			
MISC		20			

Manufacturer List

Code	Name
HA	Hager
HS	HES
LC	LCN Closers
NA	National Guard
PE	Pemko
PREP	Job Note
RO	Rockwood
SA	Sargent
ST	BEST Hinges and Sliding
VO	Von Duprin

Hardware Schedule

Heading #01

1 Single Door #**001.1**
1 Single Door #**001.2**
1 Single Door #**002.1**
1 Single Door #**004.1**
1 Single Door #**005.1**
1 Single Door #**016.2**
1 Single Door #**017.1**
1 Single Door #**100.4**
1 Single Door #**108.3**
1 Single Door #**110.2**
1 Single Door #**111.1**
1 Single Door #**114.1**
1 Single Door #**202.1**
1 Single Door #**215.1**
1 Single Door #**301.2**
1 Single Door #**311.2**

B1	48	Butt Hinge	FBB179 4.5" x 4.5"	10	ST
L04	16	Lockset	28 7G04 LL	10	SA
CL1	16	Closer	1431 UO	EP	SA
WS1	16	Wall Stop	409	US10	RO

Heading #02

1 Single Door #**000.1**
1 Single Door #**000.3**
1 Single Door #**000.4**
1 Single Door #**000.5**
1 Single Door #**000.6**
1 Single Door #**000.7**
1 Single Door #**000.8**
1 Single Door #**000.9**
1 Single Door #**006.2**
1 Single Door #**007.2**
1 Single Door #**008.2**
1 Single Door #**009.2**
1 Single Door #**106.2**
1 Single Door #**113.1**
1 Single Door #**303.2**
1 Single Door #**317.2**
1 Single Door #**S0.1**
1 Single Door #**S0.3**
1 Single Door #**S0.4**
1 Single Door #**S0.5**
1 Single Door #**SA.3**
1 Single Door #**SA.6**
1 Single Door #**SA.7**
1 Single Door #**SA.8**
1 Single Door #**SB.2**
1 Single Door #**SB.3**
1 Single Door #**SC.1**
1 Single Door #**SC.3**
1 Single Door #**SC.4**
1 Single Door #**SC.5**
1 Single Door #**SC.6**
1 Single Door #**SC.7**

B1	96	Butt Hinge	FBB179 4.5" x 4.5"	10	ST
L04	32	Lockset	28 7G04 LL	10	SA
WS1	32	Wall Stop	409	US10	RO

Heading #03

1 Single Door #**018.1**
1 Single Door #**200.1**
1 Single Door #**301.1**
1 Single Door #**S0.0**
1 Single Door #**SA.4**
1 Single Door #**SA.5**
1 Single Door #**SC.0**
1 Single Door #**SE.1**
1 Single Door #**SE.2**
1 Single Door #**SE.4**
1 Single Door #**SE.5**

B1	33	Butt Hinge	FBB179 4.5" x 4.5"	10	ST
ED1	11	Exit Device	8813 F ETL	10	SA
CL1	11	Closer	1431 UO	EP	SA
KP1	11	Protection Plate	K1050 8" x 34"	US10	RO
WS1	11	Wall Stop	409	US10	RO

Heading #04

1 Single Door #**106.1**
1 Single Door #**112.1**
1 Single Door #**11C.1**
1 Single Door #**S1.3**
1 Single Door #**SB.1**
1 Single Door #**SC.2**
1 Single Door #**SC.2X**

B2	21	Butt Hinge	FBB179 4.5" x 4.5" NRP	10	ST
ED1	7	Exit Device	8813 F ETL	10	SA
CL2	7	Closer	1431 PS	EP	SA
KP1	7	Protection Plate	K1050 8" x 34"	US10	RO
G1	7	Gasketing	160 VDKB 1 x 36" 2 x 84"		NA
DS1	7	Door Bottom	345 DPK 36"		PE
T1	7	Threshold	171 A 36"		PE

Heading #05

1 Single Door #**SA.1**
1 Single Door #**SA.2**

B1	6	Butt Hinge	FBB179 4.5" x 4.5"	10	ST
ED1	2	Exit Device	8813 F ETL	10	SA
ES1	2	Electric Strike Body	9600	612	HS
CL1	2	Closer	1431 UO	EP	SA
KP1	2	Protection Plate	K1050 8" x 34"	US10	RO
WS1	2	Wall Stop	409	US10	RO

Heading #06

1 Pair Doors #**015.1**
1 Pair Doors #**100.1**
1 Pair Doors #**100.2**
1 Pair Doors #**100.3**
1 Pair Doors #**111.2**

B1	30	Butt Hinge	FBB179 4.5" x 4.5"	10	ST
FB1	10	Flush Bolt	282D	US10	HA
L04	5	Lockset	28 7G04 LL	10	SA

Heading #07

1 Pair Doors #**000.2**
1 Pair Doors #**009.1**
1 Pair Doors #**014.1**
1 Pair Doors #**016.1**
1 Pair Doors #**021.1**

B1	30	Butt Hinge	FBB179 4.5" x 4.5"	10	ST
FB2	5	Set Latching Flush Bolts	293D	US10	HA
L04	5	Lockset	28 7G04 LL	10	SA
BR1	10	Mounting Bracket	297M	BLACK	HA
CR1	5	Coordinator	297D 72"	BLACK	HA
CL2	10	Closer	1431 PS	EP	SA

Heading #08

1 Pair Doors #**020.1**

B1	6	Butt Hinge	FBB179 4.5" x 4.5"	10	ST
ED2	2	Exit Device	8713 F ETL	10	SA
CL1	2	Closer	1431 UO	EP	SA
KP1	2	Protection Plate	K1050 8" x 34"	US10	RO
WS1	2	Wall Stop	409	US10	RO

Heading #09

1 Single Door #**003.1**
1 Single Door #**006.1**
1 Single Door #**007.1**
1 Single Door #**008.1**
1 Single Door #**010.1**
1 Single Door #**011.1**

B1	18	Butt Hinge	FBB179 4.5" x 4.5"	10	ST
L04	6	Lockset	28 7G04 LL	10	SA
ES2	6	Electric Strike	1600-CLB	612	HS
WS1	6	Wall Stop	409	US10	RO

Heading #10

1 Single Door #**012.1**
1 Single Door #**013.1**
1 Single Door #**212.1**

B1	9	Butt Hinge	FBB179 4.5" x 4.5"	10	ST
L65	3	Privacy Set	28 7U65 LL	10	SA
WS1	3	Wall Stop	409	US10	RO

Heading #11

1 Single Door #**101.1**
1 Single Door #**102.1**
1 Single Door #**104.1**
1 Single Door #**105.1**
1 Single Door #**213.1**
1 Single Door #**214.1**
1 Single Door #**313.1**
1 Single Door #**314.1**

B1	24	Butt Hinge	FBB179 4.5" x 4.5"	10	ST
PL1	8	Pull Plate	33G 3 1/2 X 15	US10	HA
PP1	8	Push Plate	30S 3 1/2 X 15	US10	HA
CL1	8	Closer	1431 UO	EP	SA
KP1	8	Protection Plate	K1050 8" x 34"	US10	RO
WS1	8	Wall Stop	409	US10	RO

Heading #12

1 Single Door #**106.3**
1 Single Door #**109.1**
1 Single Door #**112.3**
1 Single Door #**203.1**
1 Single Door #**203.2**
1 Single Door #**211.1**

B1	18	Butt Hinge	FBB179 4.5" x 4.5"	10	ST
L37	6	Lockset	28 7G37 LL	10	SA
CL1	6	Closer	1431 UO	EP	SA
KP1	6	Protection Plate	K1050 8" x 34"	US10	RO
WS1	6	Wall Stop	409	US10	RO

Heading #13

1 Pair Doors #**108.1**
1 Pair Doors #**108.2**

B1	12	Butt Hinge	FBB179 4.5" x 4.5"	10	ST
ED2	4	Exit Device	8713 F ETL	10	SA
MH1	2	Magnetic Holder	SEM7830	DKBRZ	LC
MH2	2	Magnetic Holder	SEM7820	DKBRZ	LC
CL1	4	Closer	1431 UO	EP	SA
KP1	4	Protection Plate	K1050 8" x 34"	US10	RO

Heading #14

1 Pair Doors #**107.1**

B3	2	Continuous Hinge	DFM 83 HD1		PE
ED2	1	Exit Device	8713 F ETL	10	SA
ED3	1	Exit Device	56 8713 F ETL	10	SA
CL2	2	Closer	1431 PS	EP	SA
DP1	2	Drop Plate	1431-D	EP	SA
EPT1	1	Electric Power Transfer	EPT 10	SP313	VO
PS1	1	Power Supply	3540		SA
DS1	2	Door Bottom	345 DPK 36"		PE
T2	1	Threshold	171 A 72"		PE

Heading #15

1 Pair Doors #**107.2**

B3	2	Continuous Hinge	DFM 83 HD1		PE
ED2	2	Exit Device	8713 F ETL	10	SA
CL2	2	Closer	1431 PS	EP	SA
DP1	2	Drop Plate	1431-D	EP	SA

Heading #16

1 Single Door #**204.1**
1 Single Door #**204.2**
1 Single Door #**205.1**
1 Single Door #**205.2**
1 Single Door #**206.1**
1 Single Door #**207.1**
1 Single Door #**208.1**
1 Single Door #**209.1**
1 Single Door #**210.2**

B1	27	Butt Hinge	FBB179 4.5" x 4.5"	10	ST
L05	9	Lockset	28 7G05 LL	10	SA
WS1	9	Wall Stop	409	US10	RO

Heading #17

1 Single Door #**210.1**
1 Single Door #**216.1**
1 Single Door #**216.2**
1 Single Door #**217.1**
1 Single Door #**303.1**
1 Single Door #**304.1**
1 Single Door #**305.1**
1 Single Door #**305.2**
1 Single Door #**307.1**
1 Single Door #**308.1**
1 Single Door #**309.1**
1 Single Door #**311.1**
1 Single Door #**315.1**
1 Single Door #**317.1**

B1	42	Butt Hinge	FBB179 4.5" x 4.5"	10	ST
WS1	14	Wall Stop	409	US10	RO
N1	14	Note(By Others)	KEYPAD LOCKSET BY OTHERS		PREP

Heading #18

1 Single Door #**217.2**
1 Single Door #**304.2**

B1	6	Butt Hinge	FBB179 4.5" x 4.5"	10	ST
DB1	2	Deadlock	484	10	SA
WS1	2	Wall Stop	409	US10	RO

Heading #19

1 Single Door #**306.1**
1 Single Door #**310.1**

B1	6	Butt Hinge	FBB179 4.5" x 4.5"	10	ST
L15	2	Passage Set	28 7U15 LL	10	SA
WS1	2	Wall Stop	409	US10	RO

Heading #20

1 Other Door #**MISC**

N10	1	Note(By Others)	ALL EXISTING DOORS WILL NEED THE FOLLOWING HARDWARE		PREP
N5	1	Note(By Others)	GC WILL HAVE TO PREP EXISTING DOORS FOR NEW HARDWARE		PREP
PP1	2	Push Plate	30S 3 1/2 X 15	US10	HA
EP1	1	Filler Plate	336N	PRIMED	HA

Hardware List

Mfg	Short Code	Short Description	Product Number	Finish
HA	FB1	Flush Bolt	282D	US10
	FB2	Set Latching Flush Bolts	293D	US10
	PL1	Pull Plate	33G 3 1/2 X 15	US10
	PP1	Push Plate	30S 3 1/2 X 15	US10
	CR1	Coordinator	297D 72"	BLACK
	BR1	Mounting Bracket	297M	BLACK
	EP1	Filler Plate	336N	PRIMED
HS	ES2	Electric Strike	1600-CLB	612
	ES1	Electric Strike Body	9600	612
LC	MH2	Magnetic Holder	SEM7820	DKBRZ
	MH1	Magnetic Holder	SEM7830	DKBRZ
NA	G1	Gasketing	160 VDKB 1 x 36" 2 x 84"	
PE	B3	Continuous Hinge	DFM 83 HD1	
	DS1	Door Bottom	345 DPK 36"	
	T1	Threshold	171 A 36"	
	T2	Threshold	171 A 72"	
PREP	N10	Note	ALL EXISTING DOORS WILL NEED THE FOLLOWING HARDWARE	
	N5	Note	GC WILL HAVE TO PREP EXISTING DOORS FOR NEW HARDWARE	
	N1	Note	KEYPAD LOCKSET BY OTHERS	
RO	KP1	Protection Plate	K1050 8" x 34"	US10
	WS1	Wall Stop	409	US10
SA	DB1	Deadlock	484	10
	L04	Lockset	28 7G04 LL	10
	L05	Lockset	28 7G05 LL	10
	L37	Lockset	28 7G37 LL	10
	L15	Passage Set	28 7U15 LL	10
	L65	Privacy Set	28 7U65 LL	10
	ED3	Exit Device	56 8713 F ETL	10
	ED2	Exit Device	8713 F ETL	10
	ED1	Exit Device	8813 F ETL	10
	CL2	Closer	1431 PS	EP
	CL1	Closer	1431 UO	EP
	DP1	Drop Plate	1431-D	EP
	PS1	Power Supply	3540	
ST	B1	Butt Hinge	FBB179 4.5" x 4.5"	10
	B2	Butt Hinge	FBB179 4.5" x 4.5" NRP	10
VO	EPT1	Electric Power Transfer	EPT 10	SP313

SECTION 28 3100 — FIRE DETECTION & ALARM

PART 1 – GENERAL

1.1 SUMMARY

A. Drawings and general provisions of the Contract, including General and Special Conditions, General Requirements, Division 1 Specifications, apply to this Section.

B. See Division 08 Section "Door Hardware" for door closers and holders with associated smoke detectors, electric door locks, and release devices that interface with the fire alarm system.

C. See Division 23 for any related HVAC equipment which requires interfacing to the fire alarm system.

D. Definitions:

1. FACP: Fire alarm control panel.
2. Definitions in NFPA 70 and 72 apply to fire alarm terms used in this Section.
3. Where specified within or noted on contract drawings, the acronym EC (Electrical Contractor) or FAC (Fire Alarm Contractor) shall be considered as “one”. Where the electrical contractor has subcontracted to a licensed fire alarm contractor, both parties shall be responsible for a complete code compliant operational fire alarm system. Coordination of both parties is a requirement of the specification.

E. System Description:

1. The work covered by this section of the specifications includes the providing of all labor, equipment, materials, and performance of all operations in connection with the installation of new fire alarm equipment and devices as an addition to the existing fire alarm system.
2. The fire alarm system is a complete addressable fire alarm system as described herein and as required by code. Fire alarm manufacturer shall design and provide all required drawings, calculations, stamps, specification, equipment and required component for a complete operational in compliance system addition. Fire alarm drawings within Contract Documents are shown for design intent. All fire alarm components to be wired, connected, and left in first class operating condition. The system shall use closed loop initiating devices circuits with individual zone supervision, individual notification, appliance circuit supervision and power supervision.
3. Said system addition to include, NAC and/or transponders panels as needed, manual pull stations automatic smoke/heat/duct detectors, notification devices, programming, training, wiring, terminations to devices, outlet boxes, junction boxes, and all other necessary material for a complete operating system. Operation

of all notification appliances shall be synchronized as defined by NFPA 72.

4. Fire Alarm system shall be compatible with BACnet communication protocol.
5. The complete installation is to conform to the applicable sections of NFPA-72, Local Code Requirements, Ohio Building Code, Stark County, Americans with Disabilities Act (ADA) and National Electrical Code with particular attention to Article 760.

F. Performance Requirements:

1. Premises protection includes use and occupancy classification of the building is "Business" Group "B" as shown on Architectural sheet CD-001.
2. Software:

   a. All software operations shall be stored in a non-volatile programmable memory within the fire alarm control unit. Loss of primary and secondary power shall not erase the instructions stored in memory.
   b. Upon final completion of installation, testing and programming the Owner shall receive at no additional cost a compact disc containing final fire alarm configuration, access software and miscellaneous documentation for future reference and programming restoration. This disc shall also contain relevant manuals, installation details, specifications sheets for all installed fire alarm devices and sub components.
   c. This Contractor shall provide to Coshocton Collaborative all future software updates or upgrades during warranty period. System operation or defects within shall be maintained by this Contractor for the life of the system.

      Coshocton Collaborative shall receive all access passwords allowing support of fire alarm system.

3. Fire alarm signal initiation shall be by one or more of the following devices:

   a. Manual stations.
   b. Heat detectors.
   c. Smoke detectors.
   d. Verified automatic alarm operation of smoke detectors.
   e. Automatic sprinkler system water flow.

4. Fire alarm signal shall initiate the following actions (Where Available):

   a. Alarm notification appliances shall operate continuously.
   b. Identify alarm at the FACP and remote annunciators.
   c. Transmit an alarm signal to the remote alarm receiving station.
   d. Unlock electric door locks in designated egress paths (where applicable)
   e. Release fire and smoke doors held open by magnetic door holders.
   f. Switch heating, ventilating, and air-conditioning equipment controls to fire alarm mode.
   g. Transmit signal to elevator controller for recall and code related functions (where applicable).
   h. Close smoke dampers in air ducts of system serving zone where alarm was

initiated (where applicable.)

i. Record events in the system memory.
j. Other NFPA 72 or Authority of Jurisdiction requirements.

5. Supervisory signal initiation shall be by one or more of the following devices or actions:

   a. Operation of a fire-protection system valve tamper.

6. System trouble signal initiation shall be by one or more of the following devices or actions:

   a. Open circuits, shorts and grounds of wiring for initiating device, signaling line, and notification-appliance circuits.
   b. Opening, tampering, or removal of alarm-initiating and supervisory signal-initiating devices.
   c. Loss of primary power at the FACP.
   d. Ground or a single break in FACP internal circuits.
   e. Abnormal ac voltage at the FACP.
   f. A break in standby battery circuitry.
   g. Failure of battery charging.
   h. Abnormal position of any switch at the FACP or annunciator.

7. Wiring/Signal Transmission:

   a. Transmission shall be addressable signal transmission, dedicated to fire alarm service.
   b. System connections for initiating signaling circuits and notification appliance circuits shall be Class B.
   c. Circuit Supervision: Circuit faults shall be indicated by a trouble signal at the FACP and annunciator panels. Provide a distinctive indicating audible tone and alphanumeric annunciation.

8. Remote Access:

   a. FACP shall have the capacity to provide Remote Access through a Dial-Up Service Modem and data network communications. Communication shall be via a personal computer or technician's laptop, configured with terminal emulation software shall have the ability to access the FACP for diagnostics, maintenance reporting and information gathering.

9. History Logs: The system shall provide a means to recall alarms and trouble conditions in chronological order for the purpose of recreating an event history. A separate alarm and trouble log shall be provided.

   Drill: A manual evacuation (drill) switch shall be provided to operate the notification appliances without causing other control circuits to be activated.

G. Instructions: Computer printout or typewritten instruction card mounted behind a plastic or glass cover in a stainless-steel or aluminum frame. Include interpretation and describe appropriate response for displays and signals. Briefly describe the functional operation of the system under normal, alarm, and trouble conditions.

1.2 SUBMITTALS

A. Fire Alarm Contractor (FAC) shall verify, comply and adjust device quantities, device types, locations, while meeting code and local authority having jurisdiction requirements. FAC shall submit final drawings, specifications for devices and cabling, calculations (battery, voltage drop etc), qualifications and other paperwork required for a passing permit.

B. Stamped drawings where required by the Authority Having Jurisdiction shall be stamped by an Engineer registered in the State of Ohio at the expense of the fire alarm system manufacturer.

C. Product Data: For each type of product indicated.

D. Shop Drawings:

1. System Operation Description: Detailed description for this Project, including method of operation and supervision of each type of circuit and sequence of operations for manually and automatically initiated system inputs and outputs. Manufacturer's standard descriptions for generic systems are not acceptable.
2. Device Address List: Coordinate with final system programming.
3. System riser diagram with device addresses, conduit sizes, and cable and wire types and sizes. Wiring Diagrams: Power, signal, and control wiring. Include diagrams for equipment and for system with all terminals and interconnections identified. Show wiring color code.
4. Batteries: Size calculations.

E. Field quality-control test reports.

F. Operation and maintenance data.

G. Submittals to Authorities Having Jurisdiction: In addition to distribution requirements for submittals specified in Division 01 Section "Submittals," make an identical submittal to Authorities Having Jurisdiction. To facilitate review, include copies of annotated Contract Drawings as needed to depict component locations. Resubmit if required to make clarifications or revisions to obtain approval. On receipt of comments from Authorities Having Jurisdiction, submit them to Architect for review.

H. Documentation:

1. Approval and Acceptance: Provide the "Record of Completion" form according to NFPA 72 to Owner, Architect, and Authorities Having Jurisdiction.

2. Record of Completion Documents: Provide the "Permanent Records" according to NFPA 72 to Owner, Architect, and Authorities Having Jurisdiction. Format of the written sequence of operation shall be the optional input/output matrix.

    a. Hard copies on paper to Owner, Architect, and Authorities Having Jurisdiction.
    b. Hard copies and Electronic media (AutoCAD®) provided to Engineer.

1.3 QUALITY ASSURANCE

A. Each and all items of the Fire Alarm System shall be listed as a product of a SINGLE fire alarm system manufacturer under the appropriate category by Underwriters' Laboratories, Inc. (UL), and shall bear the "UL" label. All control equipment to be listed under UL category as a single control unit. Partial listing shall NOT be acceptable.

B. Electrical Components, Devices, and Accessories: Listed and labeled as defined in NFPA 70, Article 100, by a testing agency acceptable to authorities having jurisdiction, and marked for intended use.

C. The equipment and installation supervision furnished under this specification shall be provided by a manufacturer (independent dealers and/or distributors will NOT be considered) who has been engaged in production of this type (software driven) of equipment for at least ten (10) years, and has a fully-equipped service organization within fifty (50) miles of the installation. Technicians shall be factory trained and NICET certified.

D. All control equipment must have transient protection devices to comply with UL864 requirements.

1.4 ADDITIONAL DEVICES

A. Provisions for 10% extra of each notification and initiating appliance shall be provided. Where devices are not used in final arrangement, they shall be turned over to the Owner for spare allocation.

B. Sensor Bases: Furnish quantity equal to 2 percent of the number of units of each type installed but not less than one of each type.

1.5 MAINTENANCE SERVICE

A. Maintenance Service Contract: Provide maintenance of fire alarm systems and equipment for a period of 12 months, using factory-authorized service representatives.

B. Basic Services: Systematic, routine maintenance visits on a quarterly basis at times scheduled with the Owner. In addition, respond to service calls within 24 hours of

notification of system trouble. Adjust and replace defective parts and components with original manufacturer's replacement parts, components, and supplies.

C. Additional Services: Perform services within the above 12-month period not classified as routine maintenance or as warranty work when authorized in writing. Compensation for additional services must be agreed upon in writing prior to performing services.

D. Renewal of Maintenance Service Contract: No later than 60 days prior to the expiration of the maintenance services contract, deliver to the Owner a proposal to provide contract maintenance and repair services for an additional one- year term. Owner will be under no obligation to accept maintenance service contract renewal proposal.

PART 2 – PRODUCTS

2.1 MANUFACTURERS

A. Available Manufacturers: Subject to compliance with requirements, manufacturers offering products that may be incorporated into the work include, but are not limited to, the following:

B. Manufacturers: Subject to compliance with requirements, provide products by one of the following:

FACP and Equipment:

1. Notifier
2. Siemens
3. Simplex-Grinnell
4. Edwards (EST/Vigilant)
5. Gamewell-FCI

2.2 SYSTEM DESCRIPTION

A. Noncoded, UL-certified addressable system, with multiplexed signal transmission and voice/strobe evacuation.

B. Automatic sensitivity control of certain smoke detectors.

C. All components provided shall be listed for use with the selected system.

D. Electrical Components, Devices, and Accessories: Listed and labeled as defined in NFPA 70, by a qualified testing agency, and marked for intended location and application

2.3 SYSTEMS OPERATIONAL DESCRIPTION

A. Fire-alarm signal initiation shall be by one or more of the following devices and systems:
1. Manual stations.
2. Heat detectors.
3. Smoke detectors.
4. Duct smoke detectors.
5. Verified automatic alarm operation of smoke detectors.
6. Automatic sprinkler system water flow.
7. Heat detectors in elevator shaft and pit.
8. Fire-extinguishing system operation.
9. Dry system pressure flow switch
10. Fire standpipe system.

B. Fire-alarm signal shall initiate the following actions:
1. Continuously operate alarm notification appliances including voice evacuation notices. Note 10 digital messages are supplied with the system, 5 for fire and 5 for emergency communications.
2. Identify alarm at fire-alarm control unit and remote annunciators.
3. Transmit an alarm signal to the remote alarm receiving station.
4. Unlock electric door locks in designated egress paths.
5. Release fire and smoke doors held open by magnetic door holders.
6. Activate voice/alarm communication system.
7. Switch heating, ventilating, and air-conditioning equipment controls to fire-alarm mode.
8. Close smoke dampers in air ducts of designated air-conditioning duct systems.
9. Recall elevators to primary or alternate recall floors.
10. Activate elevator shunt trip
11. Activate emergency shutoffs for gas and fuel supplies.
12. Record events in the system memory.

C. Supervisory signal initiation shall be by one or more of the following devices and actions:
1. Valve supervisory switch.
2. High or Low-air-pressure switch of a dry-pipe sprinkler system.
3. Elevator shunt-trip supervision.
4. Independent fire-detection and -suppression systems.
5. User disabling of zones or individual devices.
6. Loss of communication with any panel on the network.

D. System trouble signal initiation shall be by one or more of the following devices and actions:

1. Open circuits, shorts, and grounds in designated circuits.

2. Opening, tampering with, or removing alarm-initiating and supervisory signal-initiating devices.

3. Loss of communication with any addressable sensor, input module, relay, control module, remote annunciator, printer interface, or Ethernet module

4. Loss of primary power at fire-alarm control unit.

5. Ground or a single break in internal circuits of fire-alarm control unit.

6. Abnormal ac voltage at fire-alarm control unit.

7. Break in standby battery circuitry.

8. Failure of battery charging.

9. Abnormal position of any switch at fire-alarm control unit or annunciator.

10. Voice signal amplifier failure

E. System Supervisory Signal Actions:

1. Initiate notification appliances.

2. Identify specific device initiating the event at fire-alarm control unit and remote annunciators.

3. After a time delay, transmit a trouble or supervisory signal to the remote alarm receiving station.

4. Transmit system status to building management system.

2.4 FIRE-ALARM CONTROL UNIT

A. General Requirements for Fire-Alarm Control Unit:

1. Field-programmable, microprocessor-based, modular, power-limited design with electronic modules, complying with UL 864.

a. System software and programs shall be held in nonvolatile flash, electrically erasable, programmable, read-only memory, retaining the information through failure of primary and secondary power supplies.

b. Include a real-time clock for time annotation of events on the event recorder and printer.

c. Provide communication between the FACP and remote circuit interface panels, annunciators, and displays.

d. The FACP shall be listed for connection to a central-station signaling system service.

e. Provide nonvolatile memory for system database, logic, and operating system and event history. The system shall require no manual input to initialize in the event of a complete power down condition. The FACP shall provide a minimum 500-event history log.

2. Addressable Initiation Device Circuits: The FACP shall indicate which communication zones have been silenced and shall provide selective silencing of alarm notification appliance by building communication zone.

3. Addressable Control Circuits for Operation of Notification Appliances and Mechanical Equipment: The FACP shall be listed for releasing service.

B. Alphanumeric Display and System Controls: Arranged for interface between human operator

at fire-alarm control unit and addressable system components including annunciation and supervision. Display alarm, supervisory, and component status messages and the programming and control menu.

1. Annunciator and Display: Liquid-crystal type, 3 line(s) of 80 characters, minimum.

2. Keypad: Arranged to permit entry and execution of programming, display, and control commands and to indicate control commands to be entered into the system for control of smoke-detector sensitivity and other parameters.

C. Initiating-Device, Notification-Appliance, and Signaling-Line Circuits:

1. Pathway Class Designation: NFPA, Class B
2. Pathway Survivability: Level 1
3. Install no more than 250 addressable devices on each signaling line circuit.
4. Serial Interfaces:
   a. One dedicated RS 485 port for central-station operation using point Common event DACT.
   b. One RS 485 port for remote annunciators, Ethernet module, or multi-interface module (printer port).
   c. One USB and RS 232 port for PC configuration.
   d. One RS 232 port for voice evacuation interface

D. Smoke-Alarm Verification (does not include duct smoke detectors):
   1. Initiate audible and visible indication of an "alarm-verification" signal at fire-alarm control unit.
   2. Activate an NRTL-listed and -approved "alarm-verification" sequence at fire-alarm control unit and detector.
   3. Sound general alarm if the alarm is verified.
   4. Cancel fire-alarm control unit indication and system reset if the alarm is not verified.

E. Notification Appliance Circuit:
   1. Audible appliances shall sound the respective automatic digital message or manually selected message until silenced at the main FACP, as defined in NFPA 72.
   2. Visual alarm appliances shall flash in synchronization where multiple appliances are in the same field of view, as defined in NFPA 72.

F. Elevator Recall:
   1. Elevator recall shall be initiated only by one of the following alarm-initiating devices:
      a. Elevator lobby detectors except the lobby detector on the designated floor.
      b. Smoke detector in elevator machine room.
      c. Smoke detectors in elevator hoistway.

2. Elevator controller shall be programmed to move the cars to the alternate recall floor if lobby detectors located on the designated recall floors are activated.

3. Water-flow alarm connected to sprinkler in an elevator shaft and elevator machine room shall shut down elevators associated with the location without time delay.
   a. Water-flow switch associated with the sprinkler in the elevator pit may have a delay to allow elevators to move to the designated floor.

G. Door Controls: Door hold-open devices that are controlled by smoke detectors at doors in smoke barrier walls shall be connected to fire-alarm system.

H. Remote Smoke-Detector Sensitivity Adjustment: Controls shall select specific addressable smoke detectors for adjustment, display their current status and sensitivity settings, and change those settings. Allow controls to be used to program repetitive, time-scheduled, and automated changes in sensitivity of specific detector groups. Record sensitivity adjustments and sensitivity-adjustment schedule changes in system memory, and print out the final adjusted values on system printer.

I. Transmission to Remote Alarm Receiving Station: Automatically transmit alarm, supervisory, and trouble signals to a remote alarm station.

J. Primary Power: 24-V dc obtained from 120-V ac service and a power-supply module. Initiating devices, notification appliances, signaling lines, trouble signals, supervisory signals, supervisory and digital alarm communicator transmitters shall be powered by 24-V dc source.

1. Alarm current draw of entire fire-alarm system shall not exceed 80 percent of the power-supply module rating.

K. Secondary Power: 24-V dc supply system with batteries, automatic battery charger, and automatic transfer switch.

1. Batteries: Sealed lead calcium.

L. Instructions: Computer printout or typewritten instruction card mounted behind a plastic or glass cover in a stainless-steel or aluminum frame. Include interpretation and describe appropriate response for displays and signals. Briefly describe the functional operation of the system under normal, alarm, and trouble conditions.

2.5 MANUAL FIRE-ALARM BOXES

A. General Requirements for Manual Fire-Alarm Boxes: Comply with UL 38. Boxes shall be finished in red with molded, raised-letter operating instructions in contrasting color; shall show visible indication of operation; and shall be mounted on recessed outlet box. If indicated as surface mounted, provide manufacturer's surface back box.

1. Single-action mechanism to initiate an alarm, pull-lever type; with integral addressable module arranged to communicate manual-station status (normal, alarm, or trouble) to fire-alarm control unit.
2. Station Reset: Key- or wrench-operated switch.
3. **Please note: For all manual pull stations Provide Indoor Protective Shield**: Factory-fabricated clear plastic enclosure hinged at the top to permit lifting for access to initiate an alarm. Lifting the cover actuates an integral battery-powered audible horn intended to discourage false-alarm operation. STI model 1100.

2.6 SYSTEM SMOKE DETECTORS

A. General Requirements for System Smoke Detectors:

1. Comply with UL 268; operating at 24-V dc, nominal.

2. Detectors shall be four-wire type.
3. Integral Addressable Module: Arranged to communicate detector status (normal, alarm, or trouble) to fire-alarm control unit.
4. Base Mounting: Detector and associated electronic components shall be mounted in a twist-lock module that connects to a fixed base. Provide terminals in the fixed base for connection to building wiring.
5. Self-Restoring: Detectors do not require resetting or readjustment after actuation to restore them to normal operation.
6. Integral Visual-Indicating Light: LED type indicating detector has operated and power-on status.
7. Remote Control: Unless otherwise indicated, detectors shall be analog-addressable type, individually monitored at fire-alarm control unit for calibration, sensitivity, and alarm condition and individually adjustable for sensitivity by fire-alarm control unit.
a. Rate-of-rise temperature characteristic shall be selectable at fire-alarm control unit for 15 or 20 deg F per minute.
b. Fixed-temperature sensing shall be independent of rate-of-rise sensing and shall be settable at fire-alarm control unit to operate at 135 or 155 deg F.
c. Provide multiple levels of detection sensitivity for each sensor.
d. Sensitivity levels based on time of day

B. Photoelectric Smoke Detectors:
1. Detector address shall be accessible from fire-alarm control unit and shall be able to identify the detector's location within the system and its sensitivity setting.
2. An operator at fire-alarm control unit, having the designated access level, shall be able to manually access the following for each detector:
a. Primary status.
b. Device type.
c. Present average value.
d. Present sensitivity selected.
e. Sensor range (normal, dirty, etc.).

C. Duct Smoke Detectors: Photoelectric type complying with UL 268A.

1. Detector address shall be accessible from fire-alarm control unit and shall be able to identify the detector's location within the system and its sensitivity setting.
2. An operator at fire-alarm control unit, having the designated access level, shall be able to manually access the following for each detector:
a. Primary status.
b. Device type.
c. Present average value.
d. Present sensitivity selected.
e. Sensor range (normal, dirty, etc.).

3. Each sensor shall have multiple levels of detection sensitivity.
4. Sampling Tubes: Design and dimensions as recommended by manufacturer for specific duct size, air velocity, and installation conditions where applied.
5. Relay Fan Shutdown: Fully programmable relay rated to interrupt fan motor-control circuit.

2.7 HEAT DETECTORS

A. General Requirements for Heat Detectors: Comply with UL 521.

1. Temperature sensors shall test for and communicate the sensitivity range of the device.

B. Heat Detector, Combination Type: Actuated by either a fixed temperature of 135 deg F or a rate of rise that exceeds 15 deg F per minute unless otherwise indicated.

1. Mounting: Twist-lock base interchangeable with smoke-detector bases.
2. Integral Addressable Module: Arranged to communicate detector status (normal, alarm, or trouble) to fire-alarm control unit.

C. Heat Detector, Fixed-Temperature Type: Actuated by temperature that exceeds a fixed temperature of 190 deg F.

1. Mounting: Twist-lock base interchangeable with smoke-detector bases.
2. Integral Addressable Module: Arranged to communicate detector status (normal, alarm, or trouble) to fire-alarm control unit.

2.8 NOTIFICATION APPLIANCES

A. General Requirements for Notification Appliances: Individually addressed, connected to a signaling line circuit, equipped for mounting as indicated and with screw terminals for system connections.

B. Visible Notification Appliances: Xenon strobe lights comply with UL 1971, with clear or nominal white polycarbonate lens mounted on an aluminum faceplate. The word "FIRE" is engraved in minimum 1-inch-high letters on the lens.

1. Rated Light Output:
    a. 15/30/75/110 cd, selectable in the field.
2. Mounting: Wall mounted unless otherwise indicated.
3. For units with guards to prevent physical damage, light output ratings shall be determined with guards in place.
4. Flashing shall be in a temporal pattern, synchronized with other units.
5. Strobe Leads: Factory connected to screw terminals.
6. Mounting Faceplate: Factory finished, white.

C. /Tone Notification Appliances: High Fidelity Type Series SEFH Hi-Fi

1. Appliances shall comply with UL 1480. Frequency range 300-8000 Hz
2. Speakers for Voice Notification: Locate speakers for voice notification to provide the intelligibility requirements of the "Notification Appliances" and "Emergency Communications Systems" chapters in NFPA 72
3. High-Range Units: Rated 2 to 15 W.
4. Low-Range Units: Rated 1 to 2 W.
5. Mounting: Flush.
6. Matching Transformers: Tap range matched to acoustical environment of speaker location.

2.10 MAGNETIC DOOR HOLDERS

A. Description: Units are equipped for wall or floor mounting as indicated and are complete with matching doorplate.

1. Electromagnet: Requires no more than 3 W to develop 25-lbf holding force.
2. Wall-Mounted Units: Flush mounted unless otherwise indicated.
3. Rating: 24-V ac or dc.
4. Rating: 120-V ac.

B. Material and Finish: Match door hardware.

2.11 REMOTE ANNUNCIATOR

A. Description: Annunciator functions shall match those of fire-alarm control unit for alarm, supervisory, and trouble indications. Manual switching functions shall match those of fire-alarm control unit, including acknowledging, silencing, resetting, and testing.

1. Mounting: Flush cabinet, NEMA 250, Type 1.

B. Display Type and Functional Performance: Alphanumeric display and LED indicating lights shall match those of fire-alarm control unit. Provide controls to acknowledge, silence, reset, and test functions for alarm, supervisory, and trouble signals.

2.12 ADDRESSABLE INTERFACE DEVICE

A. General:

1. Include address-setting means on the module.
2. Store an internal identifying code for control panel use to identify the module type.
3. Listed for controlling HVAC fan motor controllers.

B. Monitor Module: Microelectronic module providing a system address for alarm-initiating devices for wired applications with normally open contacts

C. Description: Microelectronic monitor module, NRTL listed for use in providing a system address for alarm-initiating devices for wired applications with normally open contacts.

D. Integral Relay: Capable of providing a direct signal to elevator controller to initiate elevator recall and other functions as required for a complete, code compliant system.

E. Control Module:

1. Operate notification devices.
2. Operate solenoids for use in sprinkler service.
3. Other functions as required for a complete, code compliant system,

2.14 FIRE ALARM TERMINAL CABINETS

A. Description: Space Age Electronics model SSU00636 IF1 16 point terminal cabinet.

1. 16 Gauge cold rolled steel construction. White 7/8 inch indelible lettering “FIRE ALARM TERMINAL CABINET. Red textured finish.

2. Terminals rated for 12 gauge wire, terminal strip rated for 20 amp max

2.2 WIRE AND CABLE

A. Wire and cable for fire alarm systems shall be UL listed and labeled as complying with NFPA 70, Article 760.

B. Installed in conduit.

C. Signaling Line Circuits: Twisted, shielded pair sized not less than as recommended by system manufacturer.

1. Circuit Integrity Cable: Twisted shielded pair, NFPA 70 Article 760, Classification CI, for power-limited fire alarm signal service. UL listed as Type FPL, and complying with requirements in UL 1424 and in UL 2196 for a 2-hour rating.

D. Non-Power-Limited Circuits: Solid-copper conductors with 600-V rated, 75 deg C, color-coded insulation.

1. Low-Voltage Circuits: No. 16 AWG, minimum.
2. Line-Voltage Circuits: No. 12 AWG, minimum

PART 3 – EXECUTION

3.1 EQUIPMENT INSTALLATION

A. Provide and install the system in accordance with the plans and specifications, all applicable codes and the manufacturer's recommendations.

B. Installation of equipment and devices that pertain to other work in the contract shall be closely coordinated with the appropriate subcontractors.

C. Smoke or Heat Detector Spacing:

1. Smooth ceiling spacing shall not exceed the rating of the detector.
2. Spacing of heat detectors for irregular areas, for irregular ceiling construction, and for high ceiling areas, shall be determined according to Appendix A in NFPA 72.
3. Spacing of heat detectors shall be determined based on guidelines and recommendations in NFPA 72.

D. HVAC: Locate detectors not closer than 3 feet from air-supply diffuser or return-air opening.

E. HVAC Controller: FAC to provide a FACP communication status signal to the HVAC direct digital DDC controller. The Electrical Contractor shall extend conduit and wiring from the FACP to the DDC system controller. Termination of wiring to the DDC controller shall be performed by the Temperature Control Contractor.

F. Duct Smoke Detectors: Comply with NFPA 72 and NFPA 90A. Install sampling tubes so they extend the full width of the duct.

G. Heat Detectors in Elevator Shafts: Coordinate temperature rating and location with sprinkler rating and location.

H. Remote Status and Alarm Indicators: Install near each detector that is not readily visible from normal viewing position. Refer to plans for locations of remote status indicators.

I. Water-Flow and Valve Supervisory Switches: Connect for each sprinkler valve required to be supervised.

J. Device Location-Indicating Lights: Locate in the public space immediately adjacent to the device they monitor.

K. Audible Alarm-Indicating Devices: Install not less than 6 inches below the ceiling or otherwise required to meet ADA requirements. Install bells, speakers and horns on flush-mounted back boxes with the device-operating mechanism concealed behind a grille.

L. Visible Alarm-Indicating Devices: Install adjacent to each alarm bell, speaker or horn and at least 6 inches below the ceiling or otherwise required per ADA requirements.

M. FACP: Surface mount with tops of cabinets not more than 72 inches above the finished floor.

N. Annunciator: Install with top of panel not more than 72 inches above the finished floor.

3.2 WIRING INSTALLATION

A. Install wiring according to the following:

1. NECA 1.
2. TIA/EIA 568-A.
3. NEC 760.

B. Wiring Method: Install wiring in metal raceway according to Division 26 Section "Raceway and Boxes"

1. Fire alarm circuits and equipment control wiring associated with the fire alarm system shall be installed in a dedicated raceway system. This system shall not be used for any other wire or cable.

C. Wiring Method:

1. Cables and raceways used for fire alarm circuits, and equipment control wiring associated with the fire alarm system, may not contain any other wire or cable.
2. Cables and wiring terminations shall conform to respected Manufacturer and NFPA 70 installation requirements.

D. Wiring within Enclosures: Separate power-limited and non-power-limited conductors as recommended by manufacturer. Install conductors parallel with or at right angles to sides and back of the enclosure. Bundle, lace, and train conductors to terminal points with no excess. Connect conductors that are terminated, spliced, or interrupted in any enclosure associated with the fire alarm system to terminal blocks. Mark each terminal according to the system's wiring diagrams. Make all connections with approved crimp-on terminal spade lugs, pressure-type terminal blocks, or plug connectors.

E. Cable Taps: Use numbered terminal strips in junction, pull, and outlet boxes, cabinets, or equipment enclosures where circuit connections are made.

F. Color-Coding: Color-code fire alarm conductors differently from the normal building power wiring. Use one color- code for alarm circuit wiring and a different color-code for supervisory circuits. Color-code audible alarm- indicating circuits differently from alarm-initiating circuits. Use different colors for visible alarm-indicating devices. Paint fire alarm system junction boxes and covers red.

G. Risers: Install at least two vertical cable risers to serve the fire alarm system. Separate risers in close proximity to each other with a minimum 1-hour-rated wall, so the loss of one riser does not prevent the receipt or transmission of signals from other floors or zones.

H. Wiring to Remote Alarm Transmitting Device: 1-inch conduit between the FACP and the transmitter. Install number of conductors and electrical supervision for connecting wiring as needed to suit monitoring function.

3.3 IDENTIFICATION

A. Identify system components, wiring, cabling, and terminals according to Division 26 Section "Electrical Identification"

B. Install instructions frame in a location visible from the FACP.

C. Label FACP source of power "FIRE ALARM" and provide mechanical means of protection in accordance with NFPA 70 and 72.

3.4 GROUNDING

A. Ground the FACP and associated circuits; comply with IEEE 1100. Install a ground wire from main service ground to the FACP.

3.5 FIELD QUALITY CONTROL

A. Manufacturer's Field Services: Provide services of a factory-authorized service representative to supervise the field assembly and connection of components, testing and adjustments of the system.

B. Personnel associated with fire alarm system installation shall be qualified and experienced in the installation, code requirements, inspection, testing and maintenance of fire alarm systems. Examples of qualified personnel shall be permitted to include, but shall not be limited to, individuals with the following qualifications:

1. Factory trained and certified.
2. National Institute for Certification in Engineering Technologies (NICET) fire alarm certified.
3. International Municipal Signal Association (IMSA) fire alarm certified.
4. Certified by a state or local authority.
5. Trained and qualified personnel employed by an organization listed by a national testing laboratory for the servicing of fire alarm systems.

C. Perform the following field tests and inspections and prepare test reports:

1. Before requesting final approval of the installation, submit a written statement using the form for Record of Completion shown in NFPA 72.
2. Perform each electrical test and visual and mechanical inspection listed in NFPA 72. Certify compliance with test parameters.
3. Visual Inspection: Conduct a visual inspection before any testing. Use as-built drawings and system documentation for the inspection. Identify improperly located, damaged, or nonfunctional equipment, and correct before beginning tests.
4. Testing: Follow procedure and record results complying with requirements in NFPA 72.

    a. Detectors that are outside their marked sensitivity range shall be replaced.

5. Test and Inspection Records: Prepare according to NFPA 72, including demonstration of sequences of operation by using the matrix-style form in Appendix A in NFPA 70.

3.6 CLEANING AND ADJUSTING

A. Cleaning: Remove paint splatters and other spots, dirt and debris. Clean unit internally using methods and materials recommended by manufacturer. Cleaning shall be performed prior to any certification testing.

3.7 WARRANTY

A. The contractor shall warrant the completed fire alarm system wiring and equipment to be free from inherent mechanical and electrical defects for a

period of one (1) year from the date of final acceptance of the project.

3.8 DEMONSTRATION

A. At no additional cost a factory-authorized service representative shall train (2) two Owner's maintenance personnel to adjust, operate, program and maintain the fire alarm system, appliances and devices. Owner shall receive direct manufacturer's technical support for the complete fire alarm system including software updates, service passwords and services bulletins. All expenses including transportation and lodging by approved vendor shall be the responsibility of this contractor. Refer to Division 01 Section "Demonstration and Training."

END OF SECTION 28 3100

TYPICAL FINISHED FLOORING TRANSITION DETAILS

TRANSITION - TILE TO TILE EXPANSION JOINT

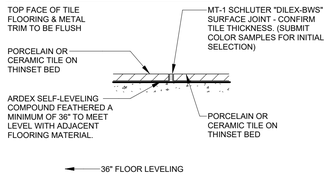

TRANSITION - WALL TILE TO FLOOR TILE

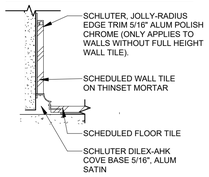

TRANSITION - LUXURY VINYL TILE TO TILE

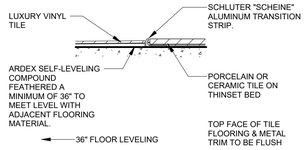

TRANSITION - LUXURY VINYL TILE TO CARPET TILE

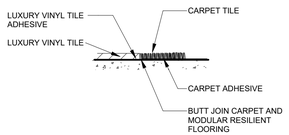

TRANSITION - LUXURY VINYL TILE TO CONCRETE

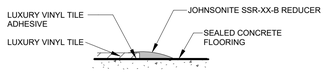

TRANSITION - TILE TO CONCRETE

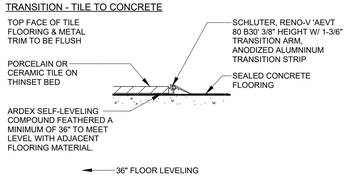

03.35.36 POLISHED CONCRETE

CONC-1
SEALED CONCRETE

CONC-2
POLISHED CONCRETE

06.20.23 INTERIOR FINISH CARPENTRY

HPDL-1
MANUFACTURER:WILSONART
COLOR:NORTH SEA D90-60
FINISH: LINEARITY FINISH 18

HPDL-2
FIRST FLOOR RESTROOMS
MANUFACTURER:WILSONART
COLOR:NATURAL RIFT
NOTES:RUN GRAIN VERTICALLY

WD-1
ARTIST SPACE / STUDIO SPACE CASEWORK
MATERIAL:MOISTURE RESISTANT PAINTED MDF
COLOR:PT-1

WD-7
FLOATING SHELF
MATERIAL:WHITE OAK PLAIN SAWN
COLOR:CLEAR
SHEEN: SATIN

06.43.00 WOOD STAIRS AND RAILINGS

WD-4
LOUNGE STAIR TREAD
MATERIAL:WHITE OAK PLAIN SAWN
SIZE:2" THICK
FINISH: CLEAR
SHEEN: SATIN

06.46.00 WOOD TRIM

WD-2
WOOD PANEL MOULDING
MANUFACTURER:MOULDINGS ONE
STYLE:PROFILE 8301
MATERIAL:PRIMED POPLAR
NOTES:PAINT TO MATCH ADJACENT COLOR

WD-5
EXISTING WINDOW INFILL
MATERIAL:PRIMED POPLAR

WD-6
WOOD WALL BASE
MATERIAL:PAINT GRADE POPLAR
COLOR:PT-6
NOTES:MATCH EXISTING WOOD BASE PROFILE

09.30.13 CERAMIC TILING

PCT-1
PORCELAIN FLOOR TILE
MANUFACTURER:CROSSVILLE
STYLE:CIVILIZATION
COLOR:CURRENCY CIV04
SIZE:24 X 24
GROUT MANUF:MAPEI
PRODUCT: KERAPOXY CQ
GROUT JOINT: 1/8" WIDE
GROUT COLOR: 5047 CHARCOAL

PCT-2
PORCELAIN WALL TILE
MANUFACTURER:NATURAL STONE RESOURCES
STYLE:PYTHON
COLOR:DRACO
GROUT MANUF:MAPEI
PRODUCT: KERAPOXY CQ
GROUT JOINT: 1/8" WIDE
GROUT COLOR: 5038 AVALANCHE

PCT-3
PORCELAIN WALL TILE
MANUFACTURER:DALTILE
STYLE:ARTCRAFTED
COLOR:COCONUT AC23
SIZE:1X6
GROUT MANUF:MAPEI
PRODUCT: KERAPOXY CQ
GROUT JOINT: 1/8" WIDE
GROUT COLOR: 5038 AVALANCHE

PCT-4
PORCELAIN WALL TILE
MANUFACTURER:DALTILE
STYLE:ARTCRAFTED
COLOR:DUNE AC24
SIZE:1X6
GROUT MANUF:MAPEI
PRODUCT: KERAPOXY CQ
GROUT JOINT: 1/8" WIDE
GROUT COLOR: 5038 AVALANCHE

PCT-5
PORCELAIN WALL TILE
MANUFACTURER:DALTILE
STYLE:ARTCRAFTED
COLOR:ALOE AC25
SIZE:1X6
GROUT MANUF:MAPEI
PRODUCT: KERAPOXY CQ
GROUT JOINT: 1/8" WIDE
GROUT COLOR: 5038 AVALANCHE

PCT-6
PORCELAIN WALL TILE
MANUFACTURER:WOW
STYLE:AQUARELLE
COLOR:VAPOR
SIZE:3X12
GROUT MANUF:MAPEI
PRODUCT: KERAPOXY CQ
GROUT JOINT: 1/8" WIDE
GROUT COLOR: 5221 MOONBEAM

PCT-7
PORCELAIN WALL TILE
MANUFACTURER:WOW
STYLE:AQUARELLE O
COLOR:GREIGE
SIZE:3X12
GROUT MANUF:MAPEI
PRODUCT: KERAPOXY CQ
GROUT JOINT: 1/8" WIDE
GROUT COLOR: 5221 MOONBEAM

PCTB-1
PORCELAIN WALL BASE
MANUFACTURER:CROSSVILLE
STYLE:CIVILIZATION
COLOR:CURRENCY CIV04
SIZE:6"

09.65.13 RESILIENT BASE AND ACCESSORIES

RB-1
BASEMENT WALL BASE
MANUFACTURER:JOHNSONITE
STYLE:TRADITIONAL VINYL
MATERIAL:RUBBER - TYPE TV
COLOR:TG2 SHARK FIN CG
SIZE:4" FACE, 4' COILS

RB-2
MANUFACTURER:JOHNSONITE
STYLE:TIGHTLOCK FOR RESILIENT FLOORING
COLOR:TG2 SHARK FIN CG
SIZE:4.375" FACE, 75' COIL

RB-3
MANUFACTURER:JOHNSONITE
STYLE:MILLWORK WALL BASE INFLECTION MW-XX-G
COLOR:08 ICICLE
SIZE:5.25" FACE, 8' LENGTH

09.56.19 RESILIENT TILE FLOORING

RF-1
MANUFACTURER:SHAW CONTRACT
STYLE:THOUGHTFUL 4122V
COLOR:CRISP 22518
SIZE:23.62" X 23.62"

09.68.13 TILE CARPETING

CPT-1
MANUFACTURER:SHAW CONTRACT
STYLE:COLLECTIVE IV 5T441 TILE
COLOR:WARM GREY 38518

09.84.36 SOUND ABSORBING CEILING UNIT

SAU-1
CAFE ACOUSTIC BAFFLE
MANUFACTURER:TURF
STYLE:METRO MODULAR CLOUD
COLOR:07 BLACK

SAU-2
CAFE ACOUSTIC BAFFLE
MANUFACTURER:TURF
STYLE:TIMBER ORGANIC
COLOR:D05 MEDIUM OAK
NOTES:6" CHAMFERED EDGE EA SIDE OF BAFFLE

09 91 23 INTERIOR PAINTING

PT-1
FIELD PAINT
MANUFACTURER:SHERWIN WILLIAMS
TOPCOAT: PROMAR 200 ZERO VOC
COLOR:SW7004 SNOWBOUND
SHEEN: EG-SHELL

PT-2
FIELD PAINT
MANUFACTURER:SHERWIN WILLIAMS
TOPCOAT: PROMAR 200 ZERO VOC
COLOR:SW7570 EGRET WHITE
SHEEN: EG-SHELL

PT-3
FIELD
MANUFACTURER:SHERWIN WILLIAMS
TOPCOAT: PROMAR 200 ZERO VOC
COLOR:SW7015 REPOSE GRAY
SHEEN: EG-SHELL

PT-4
CEILINGS / SOFFITS
MANUFACTURER:SHERWIN WILLIAMS
TOPCOAT: PROMAR 200 HP ZERO VOC
COLOR:SW7004 SNOWBOUND
SHEEN: FLAT

PT-5
CAFE ACCENT
MANUFACTURER:SHERWIN WILLIAMS
TOPCOAT: PROMAR 200 ZERO VOC
COLOR:SW9129 JADE DRAGON
SHEEN: EG-SHELL

PT-6
WOOD: BASE, TRIM, DOOR FRAMES
MANUFACTURER:SHERWIN WILLIAMS
TOPCOAT: PROMAR 200 ZERO VOC
COLOR:SW7004 SNOWBOUND
SHEEN: SEMI-GLOSS

PT-7
HIGH PERFORMANCE
MANUFACTURER:SHERWIN WILLIAMS
TOPCOAT: PROMAR 200 HP ZERO VOC
COLOR:SW7004 SNOWBOUND
SHEEN: EG-SHELL

PT-8
METAL DOORS /FRAMES
MANUFACTURER:SHERWIN WILLIAMS
TOPCOAT: PRO-INDUSTRIAL PRE-CAT EPOXY
COLOR:MATCH ADJACENT WALL
SHEEN: SEMI-GLOSS

PT-9
EXPOSED CEILINGS
MANUFACTURER:SHERWIN WILLIAMS
TOPCOAT: PRO-INDUSTRIAL ACRYLIC DRYFALL
COLOR:SW7048 URBANE BRONZE
SHEEN: FLAT

PT-10
CEILING
MANUFACTURER:SHERWIN WILLIAMS
TOPCOAT: PROMAR 200 HP ZERO VOC
COLOR:SW7570 EGRET WHITE
SHEEN: FLAT

PT-11
CEILING
MANUFACTURER:SHERWIN WILLIAMS
TOPCOAT: PROMAR 200 HP ZERO VOC
COLOR:SW7016 MINDFUL GRAY
SHEEN: FLAT

PT-12
LOUNGE STAIR RISERS
MANUFACTURER:SHERWIN WILLIAMS
TOPCOAT: PRO-INDUSTRIAL PRE-CAT EPOXY
COLOR:SW7048 URBANE BRONZE
SHEEN: EG-SHELL

PT-13
CEILING
MANUFACTURER:SHERWIN WILLIAMS
TOPCOAT: PROMAR 200 HP ZERO VOC
COLOR:SW7015 REPOSE GRAY
SHEEN: FLAT

PT-14
CAFE ACCENT
MANUFACTURER:SHERWIN WILLIAMS
TOPCOAT: PROMAR 200 ZERO VOC
COLOR:SW6191 CONTENTED
SHEEN: EG-SHELL

PT-15
HIGH PERFORMANCE - KITCHENETTES
MANUFACTURER:SHERWIN WILLIAMS
TOPCOAT: PROMAR 200 HP ZERO VOC
COLOR:SW7015 REPOSE GRAY
SHEEN: EG-SHELL

10.26.00 WALL AND DOOR PROTECTION

HW-1
CAFE WALL PROTECTION
MANUFACTURER:P3TEC
STYLE:TRANQUILITY
COLOR:SOULFUL GREY P3T-60039
SIZE:4' WIDE SHEETS
THICKNESS:0.032

12.24.13 ROLLER WINDOW SHADES

WT-1
MANUFACTURER:MECHOSHADE
OPERATION: MANUAL
STYLE:SOHO 1616, 3% OPEN
COLOR:SLATE

12.36.19 WOOD COUNTERTOPS

WD-3
BUTCHER BLOCK COUNTER
MATERIAL:SOLID OAK
COLOR:CLEAR FINISH
SHEEN: SATIN

1

WD-8
WOOD VENEER
MANUFACTURER:WISEWOOD VENEER
MATERIAL:KNOTTY HICKORY
COLOR:CLEAR
SIZE:4'X8' SHEET

WD-9
SOLID WOOD
MATERIAL:KNOTTY HICKORY
COLOR:CLEAR
SHEEN: SATIN
NOTES:REF. MILLWORK DETAILS FOR SIZING

12.36.61.16 SOLID SURFACING COUNTERTOPS

SSM-1
MANUFACTURER:DUPONT CORIAN
COLOR:SPARKLING GRANITA
FINISH: MATTE

12.36.61.19 QUARTZ AGGLOMERATE COUNTERTOPS

QS-1
FIRST FLOOR RESTROOMS
MANUFACTURER:DUPONT CORIAN
COLOR:OYSTER GRIGIO
FINISH: POLISHED

ROOM FINISH SCHEDULE

ROOM NUMBER	ROOM NAME	FLOOR FINISH	BASE FINISH	WALL FINISH	CEILING FINISH	COMMENTS
000	CORRIDOR		RB-1	PT-1		
000	CORRIDOR	CONC-2	RB-1	PT-1	--	
000B	CORRIDOR	CONC-1	RB-1	PT-1	--	
001	ELECTRICAL ROOM	CONC-1	RB-1	PT-1	--	
002	MECHANICAL ROOM	CONC-1	RB-1	PT-1	--	
003	RECORDING	CONC-2	RB-1	PT-1	--	
004	JANITOR	CONC-1	RB-1	PT-1	--	
005	MECH. RM.	CONC-1	RB-1	PT-1	--	
006	OFFICE	CONC-2	RB-1	PT-1	--	
007	OFFICE	CONC-2	RB-1	PT-1	--	
008	OFFICE	CONC-2	RB-1	PT-1	--	
009	MECH. RM.	CONC-1	RB-1	PT-1	--	
010	REC.	CONC-2	RB-1	PT-1	PT-4	
011	REC.	CONC-2	RB-1	PT-1	PT-4	
012	WOMEN'S RESTROOM	PCT-1	PCTB-1	PT-7	PT-4	
013	MEN'S RESTROOM	PCT-1	PCTB-1	PT-7	PT-4	
014	ARTIST SPACE	CONC-2	RB-1	PT-1	PT-9	INTUMESCENT PAINT ON EXPOSED COLUMNS
015	PLUMBING	CONC-2	RB-1	PT-1	--	
016	MAKER SPACE	CONC-2	RB-1	PT-1	PT-9	INTUMESCENT PAINT ON EXPOSED COLUMNS
017	ELEVATOR RM.	CONC-1	RB-1	PT-1	--	
018	VESTIBULE	CONC-1	RB-1	PT-1	PT-9	
019	VESTIBULE	CONC-1	RB-1	PT-1	--	
020	CORRIDOR	CONC-1	RB-1	PT-1	--	
021	BOILER RM.	CONC-1	RB-1	PT-1	--	
022	BASEMENT	CONC-1	RB-1	PT-1	--	
100	COMMON AREA / DISPLAY	PCT-1	WD-6 / PT-6	PT-2	PT-4 / PT-11	
101	MEN'S RESTROOM	PCT-1	PCT-6 / PCT-7	PCT-6 / PCT-	PT-13	
102	MEN'S VESTIBULE	PCT-1	WD-6 / PT-6	PT-2	PT-13	
103	VESTIBULE	PCT-1	WD-6 / PT-6	PT-2	PT-4	
104	WOMEN'S VESTIBULE	PCT-2	WD-6 / PT-6	PT-2	PT-13	
105	WOMEN'S RESTROOM	PCT-2	PCT-6 / PCT-7	PCT-6 / PCT-7	PT-13	
106	POP-UP SHOP	RS-1	WD-6 / PT-6	PT-1	PT-4	
107A	ENTRY	PCT-1	WD-6 / PT-6	PT-2	PT-10 / PT-11	
107B	ENTRY	ETR	WD-6 / PT-6	PT-2	PT-10 / PT-11	
108	CONF. RM.	PCT-1	WD-6 / PT-6	PT-2 / PT-14	PT-4	
109	COWORKING	PCT-1	WD-6 / PT-6	PT-2 / PT-14	PT-10 / PT-11	
110	WORK / SUPPLIES	CONC-1	RB-1	PT-1	PT-4	
111	WORK CAFE / LOUNGE	PCT-1	WD-6 / PT-6	PT-1 / PT-5 / PT-14 / PCT-2 / PCT-3 / PCT-4 / PCT-5	PT-4 / PT-9 / SAU-1 / SAU-2	
112	CIRC.	PCT-1	WD-6 / PT-6	PT-1	PT-4	
113	STOR.	CONC-1	RB-1	PT-1	PT-4	
114	VESTIBULE	ETR	RB-3	PT-2	PT-10 / PT-11	
200	VESTIBULE	RF-1	ETR / PT-6	PT-3	PT-4	
201	COMMON AREA / DISPLAY	RF-1	ETR / PT-6	PT-3 / PT-6	PT-4	
202	TECH CLOS	CONC-1	ETR / PT-6	PT-3	PT-4	
203	CONF. RM.	RF-1	ETR / PT-6	PT-3	PT-4	
204	PORT AUTHORITY	CPT-1	ETR / PT-6	PT-3 / PT-6	PT-4	
205	OFFICE	CPT-1	ETR / PT-6	PT-3 / PT-6	PT-4	
206	SM CONF. RM.	CPT-1	ETR / PT-6	PT-3 / PT-6	PT-4	
207	SHARED OFFICE	CPT-1	ETR / PT-6	PT-3	PT-4	
208	CHAMBER OF COMMERCE	CPT-1	ETR / PT-6	PT-3	PT-4	
209	OFFICE	CPT-1	ETR / PT-6	PT-3	PT-4	
210	INCUBATOR	RF-1	ETR / PT-6	PT-3	PT-4	
211	LUNCH RM.	RF-1	ETR / PT-6	PT-3 / PT-15	PT-4	
212	MOTHER'S ROOM	RF-1	ETR / PT-6	PT-3 / PT-15	PT-4	
213	MEN'S RESTROOM	PCT-1	PCTB-1 / PCT-7	PT-7 / PCT-7	PT-4	
214	WOMEN'S RESTROOM	PCT-2	PCTB-1 / PCT-7	PT-7 / PCT-7	PT-4	
215	STOR.	CONC-1	ETR / PT-6	PT-1	PT-4	
216	INCUBATOR SPACE	RF-1	ETR / PT-6	PT-3 / PT-6	PT-4	
217	INCUBATOR SPACE	RF-1	ETR / PT-6	PT-3 / PT-6	PT-4	
300	VESTIBULE	RF-1	ETR / PT-6	PT-3	PT-4	
301	COMMON AREA / DISPLAY	RF-1	ETR / PT-6	PT-3	PT-4	
301A	ELEC	CONC-1	ETR / PT-6	PT-3	PT-4	
302	CORRIDOR	RF-1	ETR / PT-6	PT-3 / PT-6	PT-4	
303	INCUBATOR	RF-1	ETR / PT-6	PT-3 / PT-6	PT-4	
303A	CLOS	RF-1	ETR / PT-6	PT-3	PT-4	
304	CONF. RM.	RF-1	ETR / PT-6	PT-3 / PT-6	PT-4	
305	INCUBATOR SPACE	RF-1	ETR / PT-6	PT-3	PT-4	
306	INCUBATOR SPACE	RF-1	ETR / PT-6	PT-3	PT-4	
307	INCUBATOR SPACE	RF-1	ETR / PT-6	PT-3	PT-4	
308	INCUBATOR SPACE	RF-1	ETR / PT-6	PT-3	PT-4	
309	INCUBATOR SPACE	RF-1	ETR / PT-6	PT-3	PT-4	
310	LOUNGE	RF-1	ETR / PT-6	PT-3	PT-4	
311	INCUBATOR SPACE	RF-1	ETR / PT-6	PT-3	PT-4	
311A	CLOS.	RF-1	ETR / PT-6	PT-3	PT-4	
312	LUNCH AREA	RF-1	ETR / PT-6	PT-3 / PT-6 / PT-15	PT-4	
313	MEN'S RESTROOM	PCT-1	PCTB-1 / PCT-7	PT-7 / PCT-7	PT-4	
314	WOMEN'S RESTROOM	PCT-1	PCTB-1 / PCT-7	PT-7 / PCT-7	PT-4	
315	INCUBATOR SPACE	RF-1	ETR / PT-6	PT-3	PT-4	
316	INCUBATOR SPACE	RF-1	ETR / PT-6	PT-3	PT-4	
316A	CLOS.	RF-1	ETR / PT-6	PT-3	PT-4	
S-A1	STAIR A	PCT-1	WD-6 / PT-6	PT-1	--	
S-A2	STAIR A	RF-1	RB-2	PT-1	--	
S-A3	STAIR A	RF-1	RB-2	PT-1	--	
S-B1	STAIR B	CONC-1	RB-1	PT-1	--	
S-B2	STAIR B	CONC-1	RB-1	PT-1	--	
S-B3	STAIR B	CONC-1	RB-1	PT-1	--	
S-C0	STAIR C	CONC-1	RB-1	PT-1	--	
S-C1	STAIR C	CONC-1	RB-1	PT-1	--	
S-C2	STAIR C	CONC-1	RB-1	PT-1	--	
S-C3	STAIR C	CONC-1	RB-1	PT-1	--	
S-D0	STAIR D	CONC-1	RB-1	PT-1	--	
S-D1	STAIR D	CONC-1	RB-1	PT-1	--	
S-D2	STAIR D	CONC-1	RB-2	PT-1	--	
S-D3	STAIR D	RF-1	RB-2	PT-1	--	
S-E0	STAIR E	CONC-2	RB-1	PT-1	--	
S-E1	STAIR E	PCT-1	RB-2	PT-1	--	
S-E2	STAIR E	RF-1	RB-2	PT-1	--	
S-E3	STAIR E	RF-1	RB-2	PT-1	PT-4	

ROOM FINISH SCHEDULE NOTES

1. WALL TILE TO MEET FINISH FLOOR WITH SCHLUTER IN RESTROOMS
2. FILL IN GAPS IN ETR WOOD BASE ON SECOND AND THIRD FLOORS WITH WD-6 AS REQ'D
3. WT-1 ON STOREFRONT IN COWORKING 109, WORK CAFE 111, ALL SECOND FLOOR WINDOWS, AND ALL THIRD FLOOR WINDOWS
4. ALL AREAS WITH EXISITNG CHAIR RAIL, WOOD TRIM, AND WOOD DOOR FRAMES ON SECOND AND THIRD FLOORS ARE TO BE PAINTED PT-3 AND PT-6 PER ELEVATION 10 ON SHEET 9.6
5. PAINT ALL EXPOSED DUCTWORK ON THE SECOND FLOOR PT-4

SoL Harris/Day architecture
Designed for People. Designed for Life.
6677 Frank Avenue NW, North Canton, OH 44720 | 330.493.3722 | www.solharrisday.com

not published, all rights reserved

Project Description for:
Coshocton Port Authority - Coshocton Collaborative
538 Main St
Coshocton, OH, 43812

MARK	DATE	DESCIPTION
1	12/01/2023	ADDENDUM NO 1

PROJECT NO: 23-029
DATE: 11.15.2023

FINISH SCHEDULE & DETAILS

9.5

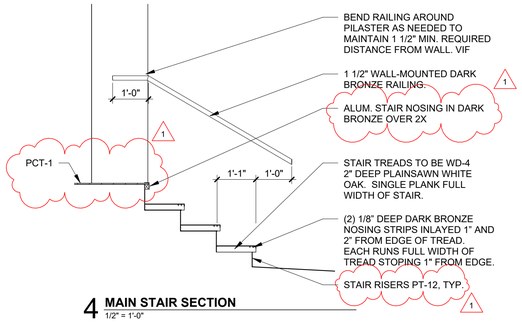

4 **MAIN STAIR SECTION**
1/2" = 1'-0"

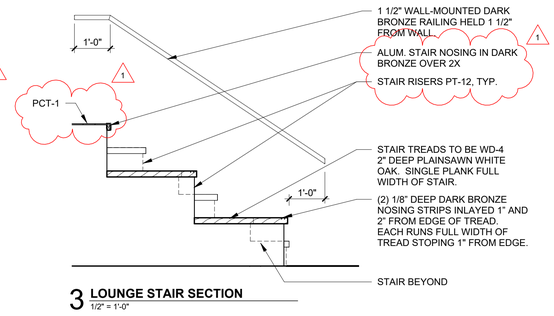

3 **LOUNGE STAIR SECTION**
1/2" = 1'-0"

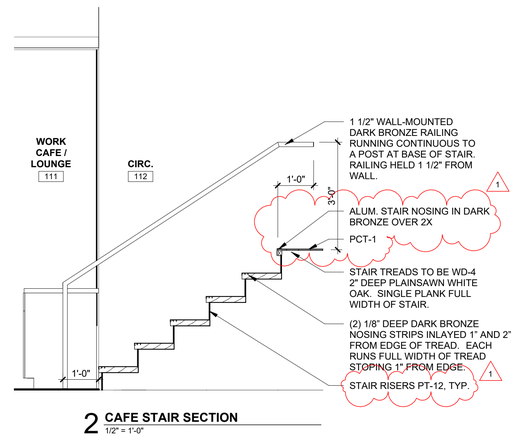

2 **CAFE STAIR SECTION**
1/2" = 1'-0"

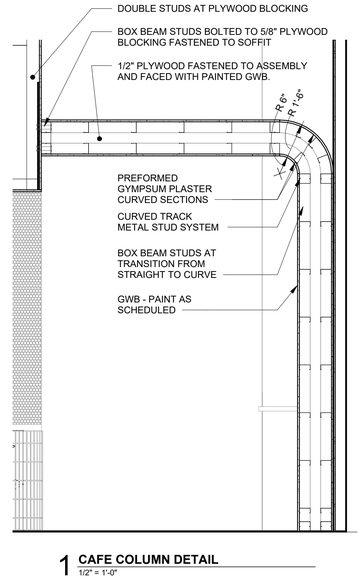

1 **CAFE COLUMN DETAIL**
1/2" = 1'-0"

SoL Harris/Day architecture
Designed for People. Designed for Life.
6677 Frank Avenue NW, North Canton, OH 44720 | 330.493.3722 | www.solharrisday.com

not published, all rights reserved

Project Description for:
Coshocton Port Authority - Coshocton Collaborative
538 Main St
Coshocton, OH, 43812

MARK	DATE	DESCIPTION
1	12/01/2023	ADDENDUM NO 1

PROJECT NO: 23-029
DATE: 11.15.2023

INTERIOR DETAILS

9.8

GENERAL FFE PLAN NOTES

A. SHADED FURNITURE AND EQUIPMENT ITEMS TO BE FURNISHED BY OWNER AND INSTALLED BY CONTRACTOR. CONTRACTOR MAY NEED TO COORDINATE SPECIFIC FIXTURE AND EQUIPMENT REQUIREMENTS IF NOTED.
B. PROVIDE REINFORCING/BLOCKING FOR ATTACHMENT OF ALL MILLWORK, CASEWORK, AND/OR ACCESSORIES AS REQUIRED IN EXISTING WALLS AND CONCEALED IN-WALL REINFORCING/BLOCKING IN NEW WALLS.

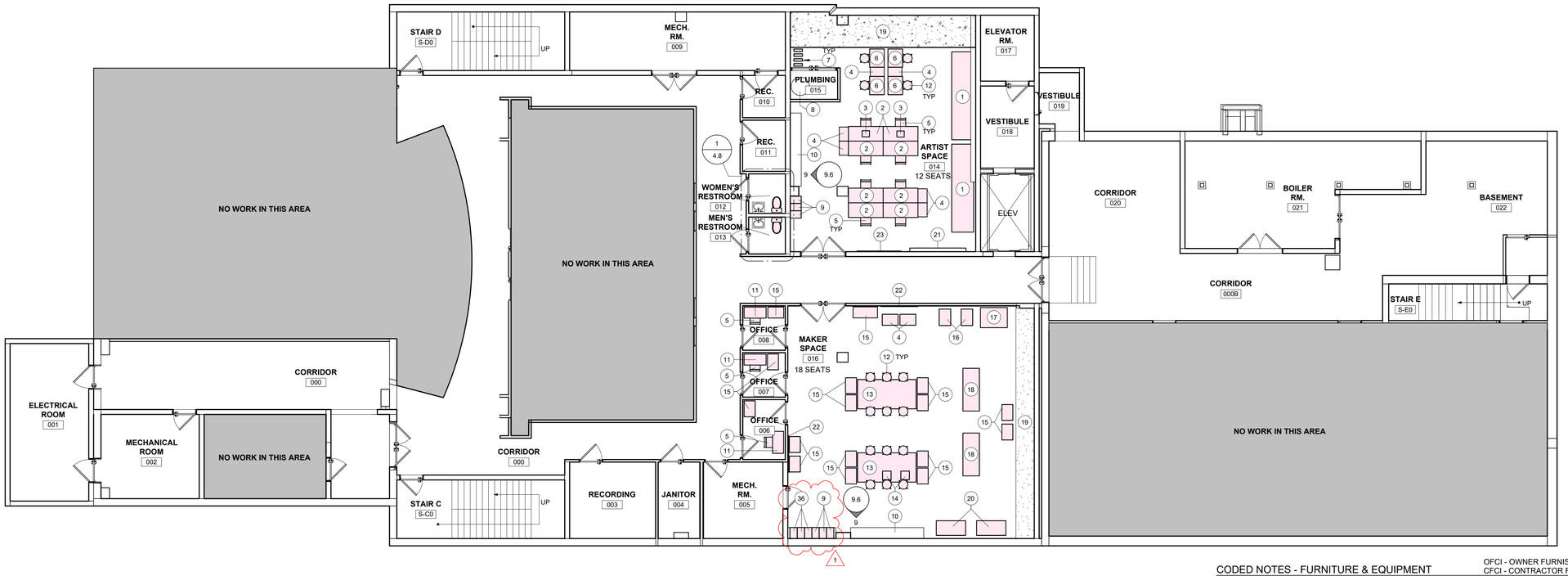

1 **BASEMENT FURNITURE PLAN**
1/8" = 1'-0"

CODED NOTES - FURNITURE & EQUIPMENT

OFCI - OWNER FURNISHED, CONTRACTOR INSTALLED
CFCI - CONTRACTOR FURNISHED, CONTRACTOR INSTALLED

1. QUILT MAKER, OFCI
2. SEWING TABLE, OFCI
3. SEWING MACHINE, OFCI
4. FILE CABINET, OFCI
5. CHAIR, OFCI
6. DRAFTING TABLE, OFCI
7. IRONING BOARD, OFCI
8. ETR SPRINKLER RISER
9. DOUBLE TIER METAL LOCKER, OFCI
10. WOOD CABINET, REF. INTERIOR ELEVATIONS & MILLWORK DETAILS
11. DESK, OFCI
12. STOOL, OFCI
13. FABRICATION TABLE, REF. MILLWORK DETAILS
14. 3D PRINTER, OFCI
15. TOOL CABINET, OFCI
16. SAW HORSES, OFCI
17. SHEET BRAKE, OFCI
18. TABLE SAW, OFCI
19. ETR FOUNDATION
20. CNC MACHINE, OFCI
21. ETR ELEC. PANELS
22. 4' x 5' x 1/4" PEG BOARD, HIGH-STRENGTH 5.5 MM HIGH DENSITY FIBERBOARD (HDF), WHITE FINISH, 9/32" HOLES, STANDARD SPACING. PROVIDE 20 HEAVY DUTY WOOD PEGS PER PEG BOARD, CFCI
23. BULLETIN BOARD, OFCI
24. UNDERCOUNTER REFRIGERATOR W/ GLASS DOOR, OFCI
25. UNDERCOUNTER ICE MACHINE, OFCI
26. DISHWASHER, OFCI
27. ARCHED COLUMN, REF. INTERIOR ELEVATIONS
28. 60" TELEVISION MOUNTED AT 5'-0" AFF, OFCI
29. SOAP DISPENSER MOUNTED ON COUNTER ADJACENT TO FACUET, CFCI
30. HAND DRYER, CFCI
31. BABY CHANGING STATION, CFCI
32. TOILET PAPER DISPENSER, CFCI
33. SANITARY NAPKIN DISPENSER, CFCI
34. MIRROR TO BE HUNG ON CENTER OF WALL, MIRROR TO BE CFCI
35. WALL MOUNTED SOAP DISPENSER, CFCI
36. SINGLE TIER METAL LOCKER, OFCI

SoL Harris/Day architecture
Designed for People. Designed for Life.
6677 Frank Avenue NW, North Canton, OH 44720 | 330.493.3722 | www.solharrisday.com

not published, all rights reserved

Project Description for:
Coshocton Port Authority - Coshocton Collaborative
538 Main St
Coshocton, OH, 43812

MARK	DATE	DESCIPTION
1	12/01/2023	ADDENDUM NO 1

PROJECT NO: 23-029
DATE: 11.15.2023

BASEMENT FURNITURE PLAN

12.1

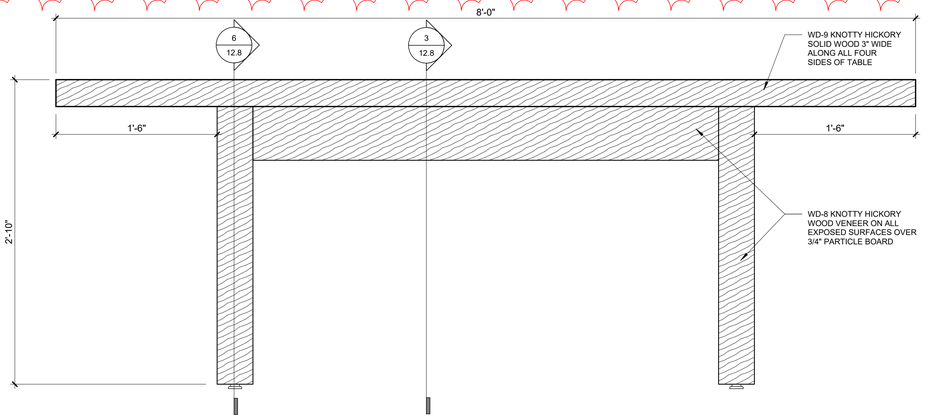

8 FABRICATION TABLE FRONT ELEVATION
1 1/2" = 1'-0"

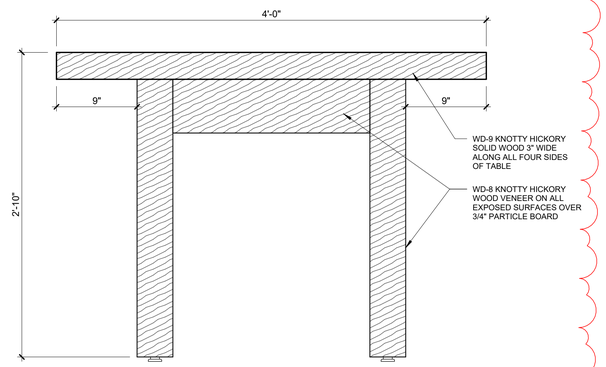

7 FABRICATION TABLE SIDE ELEVATION
1 1/2" = 1'-0"

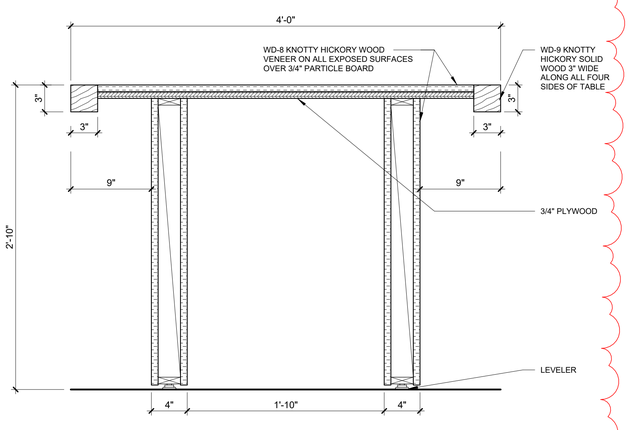

6 FABRICATION TABLE SECTION
1 1/2" = 1'-0"

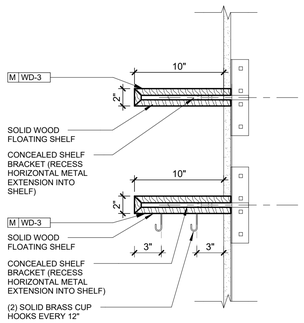

5 FLOATING SHELF
1 1/2" = 1'-0"

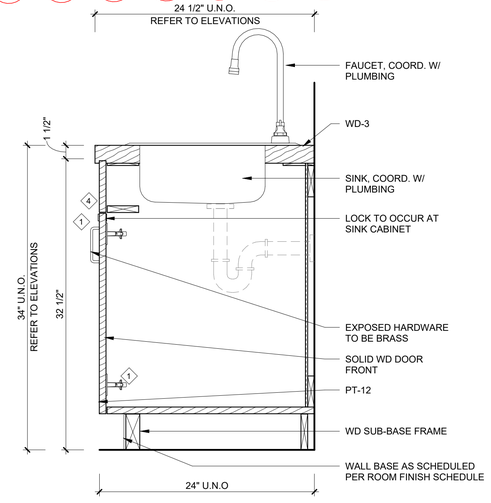

4 B6 WD SINK BASE CABINET - DOOR
1 1/2" = 1'-0"

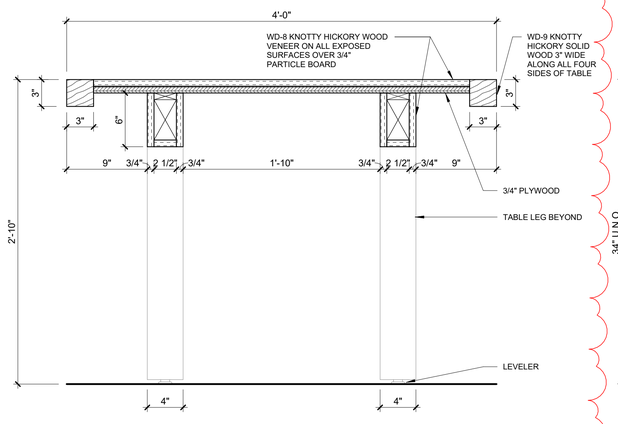

3 FABRICATION TABLE SECTION
1 1/2" = 1'-0"

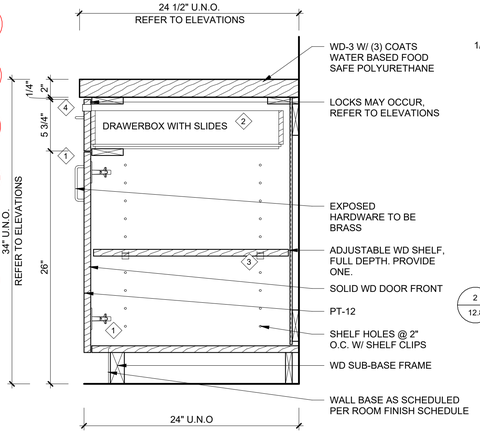

2 B4/B5 WD BASE CABINET - DOOR & DRAWER
1 1/2" = 1'-0"

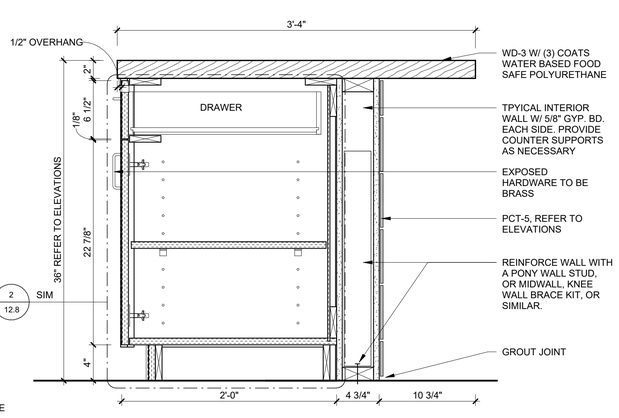

1 BAR COUNTER SECTION
1 1/2" = 1'-0"

GENERAL MILLWORK NOTES

A. GC SHALL BE RESPONSIBLE FOR PROVIDING ADEQUATE CONCEALED BLOCKING IN WALL FOR MOUNTING OF MILLWORK WHERE THE WALL IS NEW.
B. ALL COUNTERTOPS TO OVERHANG 1" U.N.O.
C. ALL SOLID SURFACE COUNTERTOPS TO HAVE 1" RADIUS OUTSIDE CORNER, U.N.O.
D. ALL CABINET DOORS/DRAWERS TO BE FULL OVERLAY.
E. ALL EXPOSED/ VISIBLE SURFACES TO RECIEVE PLASTIC LAMINATE FINISH. ALL INTERIOR SEMI-CONCEALED SURACES TO BE WHITE MELAMINE.
F. ALL PLASTIC LAMINATE DOORS AND DRAWERS TO RECEIVE 1-1/2MM PVC EDGE BANDING.
G. ALL FILLER STRIPS AND SOFFIT PANELS TO BE FLUSH WITH FRONT OF CABINET DOORS OR DRAWERS, REFER TO 'FILLER PANEL PLAN SECTION' DETAIL.
H. ALL DRAWERS TO RECEIVE SOFT CLOSE HARDWARE.
I. ALL DOORS AND DRAWERS TO RECEIVE LOCKS.

MILLWORK HARDWARE SCHEDULE

1. WIRE PULL
2. DRAWER SLIDE
3. CYLINDER CAM LOCK
4. PRESSURE FIT CLIP
5. SHELF PIN
6. HINGE
7. CONCEALED FLAT BRACKET
8. GROMMET
9. WIRE TRAY

CASEWORK LEGEND

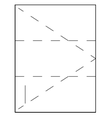
W1 / PLAM UPPER CABINET, SINGLE DOOR

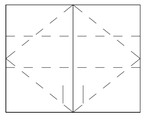
W2 / PLAM UPPER CABINET, DOUBLE DOOR

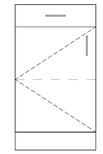
B1 / PLAM BASE CABINET WITH DRAWER, SINGLE DOOR

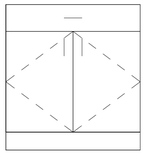
B2 / PLAM BASE CABINET WITH DRAWER, DOUBLE DOOR

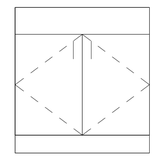
B3 / PLAM SINK BASE CABINET, NO DRAWER, DOUBLE DOOR

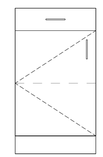
B4 / WD BASE CABINET WITH DRAWER, SINGLE DOOR

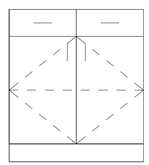
B5 / WD BASE CABINET WITH DOUBLE DRAWER, DOUBLE DOOR

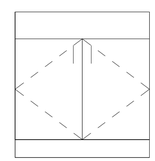
B6 / WD BASE CABINET, SINK, NO DRAWER, DOUBLE DOOR

SB-1 / SINK BASE ADA SKIRT

SoL Harris/Day architecture
Designed for People. Designed for Life.
6677 Frank Avenue NW, North Canton, OH 44720 | 330.493.3722 | www.solharrisday.com

not published, all rights reserved

Project Description for:
Coshocton Port Authority - Coshocton Collaborative
538 Main St
Coshocton, OH. 43812

MARK	DATE	DESCIPTION
1	12/01/2023	ADDENDUM NO 1

PROJECT NO: 23-029
DATE: 11.15.2023

CASEWORK & MILLWORK DETAILS

12.8

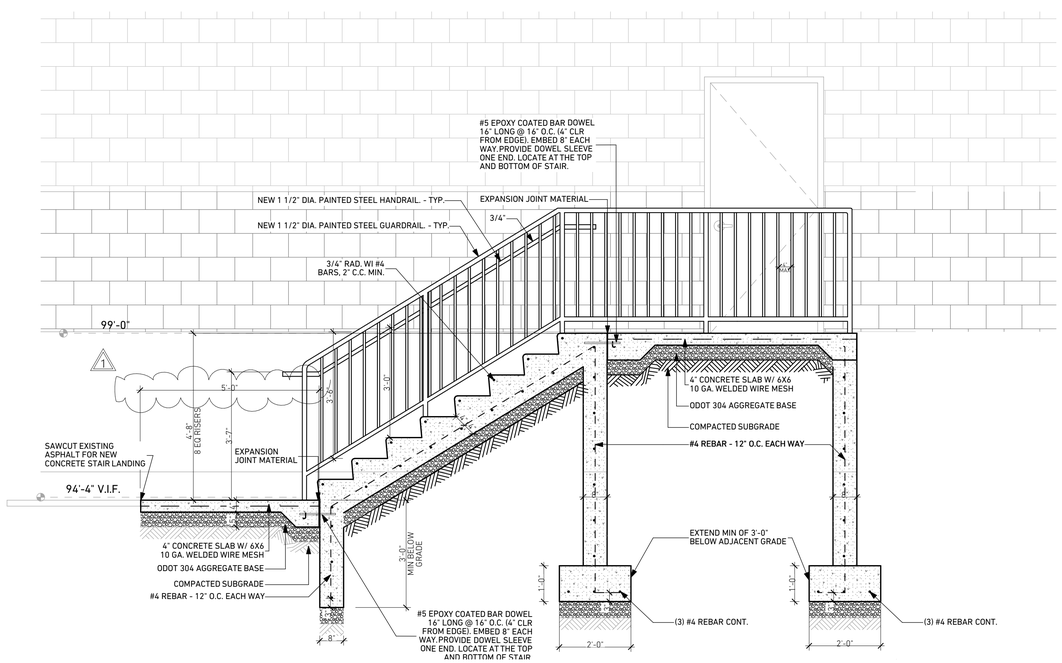

A3 S-D EXTERIOR STAIR DETAIL
SCALE: 1/2" = 1'-0"

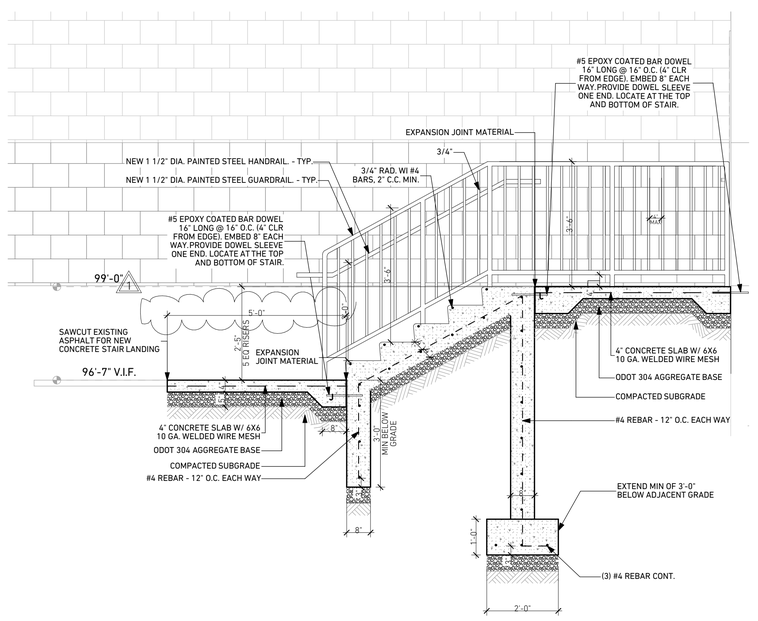

A1 S-C EXTERIOR STAIR DETAIL
SCALE: 1/2" = 1'-0"

SoL Harris/Day architecture
Designed for People. Designed for Life.
6677 Frank Avenue NW, North Canton, OH 44720 | 330.493.3722 | www.solharrisday.com

STATE OF OHIO
MATTHEW SUTTER
11554
REGISTERED ARCHITECT
MATTHEW SUTTER, ARCHITECT LICENSE #11554
MATTHEW@SOLHARRISDAY.COM

not published, all rights reserved

Renovation for:
Coshocton Port Authority - Coshocton Collaborative
538 Main St
Coshocton, OH, 43812

MARK	DATE	DESCRIPTION
1	12/01/2023	ADDENDUM NO 1

PROJECT NO: 19.137
DATE: 11/15/2023

STAIR SECTIONS

14.3

FIRE PROTECTION FIRESTOP SCHEDULE

NOTE:

1. FIRESTOP ASSEMBLY TYPE (REQUIRED FIRESTOPPING MATERIALS) SHALL BE DETERMINED BY THE WALL OR FLOOR/CEILING ASSEMBLY AND PENETRATION TYPE AND SHALL BE UL LISTED AND TESTED IN ACCORDANCE WITH ASTM E814. FIRE RATING OF THE ASSEMBLY SHALL BE EQUIVALENT TO THE WALL OR FLOOR/CEILING ASSEMBLY RATING.
2. ACCEPTABLE FIRE BARRIER PRODUCTS: HILTI "FS-ONE", NELSON "FLAMESEAL" OR APPROVED EQUAL AS MANUFACTURED BY 3M.
3. IF REQUESTED, THE CONTRACTOR SHALL SHOW PROOF OF COMPLIANCE BY PROVIDING THE APPROPRIATE UL FIRESTOPPING SYSTEM NUMBER TO THE INSPECTION AUTHORITY HAVING JURISDICTION OR THE ARCHITECT/ENGINEER.

PENETRATION	RATING	U.L. SYSTEM
INSULATED METAL PIPE THROUGH GYPSUM BOARD	**1 OR 2 HOUR**	HILTI UL #WL5029 OR APPROVED EQUAL
INSULATED METAL PIPE THROUGH MASONRY	**4 HOUR**	HILTI UL #WJ5028 OR APPROVED EQUAL
INSULATED METAL PIPE THROUGH MASONRY/CONCRETE	**2 HOUR**	HILTI UL #CAJ5091 OR APPROVED EQUAL
INSULATED METAL PIPE THROUGH POURED CONCRETE FLOOR SLAB	**2 HOUR**	HILTI UL #FA5017 OR APPROVED EQUAL
METAL DUCT WITHOUT FIRE DAMPER THROUGH MASONRY/CONCRETE	**1 OR 2 HOUR**	HILTI UL #WJ7021 OR #WJ7022 OR APPROVED EQUAL
METAL DUCT WITHOUT FIRE DAMPER THROUGH GYPSUM BOARD	**1 OR 2 HOUR**	HILTI UL #WL7040 OR #WL7042 OR APPROVED EQUAL
METAL DUCT WITHOUT FIRE DAMPER THROUGH MASONRY/CONCRETE	**3 HOUR**	HILTI UL #CAJ7046 OR APPROVED EQUAL
METAL PIPE THROUGH GYPSUM BOARD	**1 OR 2 HOUR**	HILTI UL #WL1054 OR APPROVED EQUAL
METAL PIPE THROUGH MASONRY/CONCRETE	**2 HOUR**	HILTI UL #CAJ1291 OR APPROVED EQUAL
METAL PIPE THROUGH MASONRY/CONCRETE	**3 HOUR**	HILTI UL #CAJ1155 OR #CAJ1226 OR APPROVED EQUAL
METAL PIPE THROUGH POURED CONCRETE FLOOR SLAB	**3 HOUR**	HILTI UL #FA1017 OR APPROVED EQUAL
PLASTIC PIPE THROUGH GYPSUM BOARD	**1 OR 2 HOUR**	HILTI UL #WL2078 OR APPROVED EQUAL
PLASTIC PIPE THROUGH MASONRY/CONCRETE	**2 HOUR**	HILTI UL #CAJ2271 OR APPROVED EQUAL
PLASTIC PIPE THROUGH MASONRY/CONCRETE	**3 HOUR**	HILTI UL #CAJ2109 OR #CAJ2110 OR APPROVED EQUAL
PLASTIC PIPE THROUGH POURED CONCRETE FLOOR SLAB	**3 HOUR**	HILTI UL #FA2054 OR APPROVED EQUAL

SPRINKLER HEAD LEGEND

SYMBOL	DESCRIPTION
	CONCEALED SPRINKLER HEAD
	PENDANT SPRINKLER HEAD
	RECESSED SPRINKLER HEAD
	SIDEWALL SPRINKLER HEAD
	UPRIGHT SPRINKLER HEAD
	UPRIGHT SPRINKLER HEAD WITH PROTECTIVE CASE

FIRE PROTECTION SYMBOLS LEGEND

SYMBOL	DESCRIPTION
	GATE VALVE
	BALL VALVE
	CHECK VALVE
	GATE VALVE
	BUTTERFLY VALVE
	GATE VALVE WITH TAMPER SWITCH
	FLOW SWITCH
	DOUBLE CHECK BACKFLOW PREVENTER WITH BYPASS METER
	POST MOUNTED SIAMESE FIRE DEPARTMENT CONNECTION
	SITE FIRE HYDRANT
FD	SANITARY FLOOR DRAIN (BY PC)
	WITHIN DARK OUTLINED AREA, THE FIRE PROTECTION CONTRACTOR SHALL REMOVE AND REWORK SPRINKLER BRANCH PIPING AND INSTALL NEW SPRINKLER HEADS AS COORDINATED WITH OTHER CONTRACTORS TO ACCOMMODATE NEW ARCHITECTURAL, MECHANICAL, PLUMBING AND ELECTRICAL WORK, AND NEW CEILING LAYOUTS.

FIRE PROTECTION PIPE FITTING LEGEND

SYMBOL	DESCRIPTION
	CONCENTRIC REDUCER
	ECCENTRIC REDUCER
	CAP
	90° PIPE RISE OR DROP
	90° PIPE CONNECTION OUT OF BOTTOM
	90° PIPE CONNECTION OUT OF TOP
	45° PIPE CONNECTION OUT OF SIDE
	PIPING RISER DOWN
	PIPING RISER UP
	TIE-IN POINT

ABBREVIATIONS LEGEND - FIRE PROTECTION

ABBREVIATION	DESCRIPTION
AD	ACCESS DOOR
ADA	AMERICANS WITH DISABILITIES ACT
AFF	ABOVE FINISHED FLOOR
AFF	ABOVE FINISHED FLOOR
AFG	ABOVE FINISHED FINISHED GRADE
ALT	ALTERNATE
ARCH	ARCHITECT, ARCHITECTURAL
D	DRAIN
DCDA	DOUBLE CHECK DETECTOR ASSEMBLY
DCVA	DOUBLE CHECK VALVE ASSEMBLY
DCW	DOMESTIC COLD WATER
DEMO	DEMOLITION
DIA	DIAMETER
DN	DOWN
DTF	DOWN THRU FLOOR
DTR	DOWN THRU ROOF
DWG	DRAWING
EC	ELECTRICAL CONTRACTOR
ETR	EXISTING TO REMAIN
F	FIRE LINE - ABOVE GROUND
FA	FIRE ALARM
FD	FLOOR DRAIN
FDC	FIRE DEPARTMENT CONNECTION
FDV	FIRE DEPARTMENT VALVE
FP	FIRE PROTECTION
FPC	FIRE PROTECTION CONTRACTOR
GC	GENERAL CONTRACTOR
GPM	GALLON PER MINUTE
MC	MECHANICAL CONTRACTOR
MFR	MANUFACTURER
NEC	NATIONAL ELECTRICAL CODE
NFPA	NATIONAL FIRE PROTECTION ASSOCIATION
PC	PLUMBING CONTRACTOR
PSI	POUNDS PER SQUARE INCH
RPBP	REDUCED PRESSURE BACKFLOW PREVENTER
SPR	AUTOMATIC SPRINKLER LINE
TEMP	TEMPORARY
TYP	TYPICAL
UDCW	UNDERGROUND DOMESTIC COLD WATER
UF	FIRE LINE - UNDERGROUND
UNO	UNLESS NOTED OTHERWISE
WPD	WATER PRESSURE DROP

FIRE PROTECTION DRAWING LIST

SHEET NUMBER	SHEET NAME
FP0.1	FIRE PROTECTION GENERAL INFORMATION
FP2.1	BASEMENT FIRE PROTECTION PLAN
FP2.2	FIRST FLOOR FIRE PROTECTION PLAN
FP2.3	SECOND FLOOR FIRE PROTECTION PLAN
FP2.4	THIRD FLOOR FIRE PROTECTION PLAN

FIRE PROTECTION NEW WORK NOTES:

1. SHUT-OFF VALVES SHALL BE INSTALLED IN ACCESSIBLE LOCATIONS. COORDINATE THE LOCATION OF ACCESS DOORS IN CEILINGS OR WALLS WITH THE GENERAL CONTRACTOR IF A VALVE IS REQUIRED TO BE LOCATED ABOVE AN INACCESSIBLE CEILING OR IN A WALL OR CHASE.
2. SPRINKLER HEADS SHALL BE LOCATED IN CENTER OF CEILING TILES. SEE ARCHITECTURAL REFLECTED CEILING PLANS FOR COORDINATION OF SPRINKLER HEAD LOCATIONS.
3. SPRINKLER PIPING ROUTED ABOVE LAY-IN CEILINGS SHALL BE INSTALLED WITH AT LEAST 6 INCHES OF CLEARANCE FROM THE BOTTOM OF THE PIPE TO THE TOP OF THE LAY-IN SUPPORT MEMBERS FOR CEILING TILE REMOVAL.
4. CONTROL VALVES SHALL BE LABELED SO AS TO INDICATE THE AREA/ZONE THAT IS SERVICED BY THE VALVE.
5. INSPECTORS TEST VALVES SHALL BE LOCATED IN CONVENIENT LOCATIONS WITHIN 7 FEET OF THE FLOOR AND SHALL DISCHARGE INTO AN APPROVED AREA WHERE FULL FLOW UNDER FULL WORKING PRESSURE WILL NOT CAUSE WATER DAMAGE OR SAFETY HAZARDS. PROVIDE HARD PLASTIC SIGNAGE WITH METAL CHAIN HANGER BELOW CEILING TO INDICATE LOCATION OF SPRINKLER TEST VALVES.
6. PIPE LENGTHS AND SIZES INDICATED ON THIS DRAWING SET ARE DIAGRAMMATIC IN NATURE AND ARE FOR DESIGN INTENT. DO NOT SCALE THE DRAWINGS. THE FIRE PROTECTION CONTRACTOR SHALL VERIFY (BY MEANS OF HYDRAULIC CALCULATIONS) ALL FINAL PIPE LENGTHS AND SIZES BEFORE INSTALLING.
7. SEE ARCHITECTURAL DRAWINGS FOR LIFE SAFETY DRAWINGS CONTAINING WALL RATINGS AND LOCATIONS.
8. DESIGN AND INSTALL SPRINKLER SYSTEM PER NFPA13 REQUIREMENTS FOR ROOM OR AREA HAZARD. COORDINATE ALL LAYOUTS WITH OTHER TRADES AND ARCHITECTURAL FINAL CEILING LAYOUTS.

GENERAL DRAWING NOTES:

1. MATERIALS ILLUSTRATED WITH LIGHT LINES ARE EXISTING TO REMAIN UNLESS NOTED OTHERWISE.
2. EXISTING CONDITIONS SHOWN ARE BASED ON REVIEW OF REFERENCE DRAWINGS AND GENERAL FIELD REVIEW. NOTIFY ENGINEER IF FIELD CONDITIONS DIFFER FROM WHAT IS SHOWN. CONTRACTOR IS RESPONSIBLE FOR FIELD MEASURING AND COORDINATING DIMENSIONS FOR TIE-IN AND INSTALLATION OF ALL NEW EQUIPMENT, DUCTWORK, PIPING AND OTHER MATERIALS PRIOR TO FABRICATION.
3. MATERIALS ILLUSTRATED WITH DARK DASHED LINES SHALL BE REMOVED. THE OWNER SHALL HAVE THE RIGHT TO RETAIN ANY MATERIALS ILLUSTRATED TO BE REMOVED. IF REQUESTED BY THE OWNER, THE CONTRACTOR SHALL REMOVE MATERIALS AND RELOCATE THEM TO THE OWNER'S SPECIFIED LOCATION OF STORAGE. ALL MATERIALS NOTED TO BE RELOCATED SHALL BE TEMPORARILY STORED AND PROTECTED DURING CONSTRUCTION BY THE CONTRACTOR UNLESS NOTED OTHERWISE. REMOVE ALL MATERIALS ASSOCIATED WITH EQUIPMENT AND DUCTWORK, INCLUDING PIPING, HANGERS, SUPPORTS, POWER, CONTROLS, INSULATION, ETC.
4. MATERIALS ILLUSTRATED WITH DARK LINES ARE NEW.
5. DO NOT INSTALL ANY MATERIALS IN A LOCATION THAT HINDERS MAINTENANCE ACCESS TO ANY MATERIAL THAT REQUIRES SERVICE OR MAINTENANCE.
6. THIS CONTRACTOR SHALL REMOVE AND RE-INSTALL EXISTING CEILING SYSTEMS WHERE NECESSARY TO ACCOMMODATE ABOVE CEILING WORK. PRIOR TO REMOVAL OF CEILINGS, CONTRACTOR SHALL PHOTOGRAPH CONDITION OF EXISTING CEILINGS AND SUBMIT PHOTO DOCUMENTATION TO OWNER AND ENGINEER. CEILING REMOVAL AND REINSTALLATION WORK SHALL BE CAREFULLY PERFORMED WITH CLEAN GLOVES TO MAINTAIN CEILING APPEARANCE. CONTRACTOR SHALL REPLACE ALL DAMAGED AND/OR DIRTY CEILING TILES TO MATCH EXISTING.
7. PATCH AND PAINT WALLS, CEILINGS AND FLOORS TO MATCH EXISTING AS REQUIRED TO ACCOMMODATE WORK.
8. AREAS OF THIS BUILDING UTILIZE A RETURN AIR PLENUM. ALL MATERIALS SHALL HAVE A MAXIMUM 25 FLAME SPREAD AND 50 SMOKE-DEVELOPED INDEX AS TESTED IN ACCORDANCE WITH ASTME 84 OR UL 723. WIRING SHALL BE PLENUM RATED PER NFPA 70.
9. UNLESS DETAILED OTHERWISE, SYSTEMS SHALL BE ORGANIZED SUCH THAT DUCTWORK MAINS ARE THE HIGHEST LEVEL AND ARE TIGHT TO BUILDING STRUCTURE. HVAC PIPING AND PLUMBING PIPING SHALL BE ROUTED BELOW THE DUCTWORK MAINS, AND FIRE PROTECTION PIPING SHALL BE BELOW ALL.

SOL Harris/Day architecture
Designed for People. Designed for Life.
6677 Frank Avenue NW, North Canton, OH 44720 | 330.493.3722 | www.solharrisday.com

STATE OF OHIO
ERIC
L
WRIGHT
78568
REGISTERED
PROFESSIONAL ENGINEER

not published, all rights reserved

Renovation for:
Coshocton Port Authority - Coshocton Collaborative
538 Main St
Coshocton, OH, 43812

MARK	DATE	DESCRIPTION

PROJECT NO: 19.137
DATE: 11/10/2023

FIRE PROTECTION GENERAL INFORMATION

FP0.1

NOTES:

1. EXISTING FIRE PROTECTION SYSTEM SUBSTANTIALLY COMPLETED. MAINS AND ALL ASSOCIATED FLOW AND TAMPER SWITCHES INSTALLED ALONG WITH BRANCHES TO SPRINKLER DROPS. SPRINKLER HEADS NOT INSTALLED.
2. ONLY MAINS AND GENERAL SYSTEM ROUTING SHOWN ON PLANS. FULL BRANCHES AND SPRINKLER SYSTEM NOT DETAILED AS INSTALLED.
3. EXISTING SYSTEM TO BE REVIEWED AND TESTED BY THE CERTIFIED SPRINKLER CONTRACTOR TO VERIFY THE EXISTING SYSTEM IS OPERATIONAL.

2 FP2.1 **WATER ENTRY**

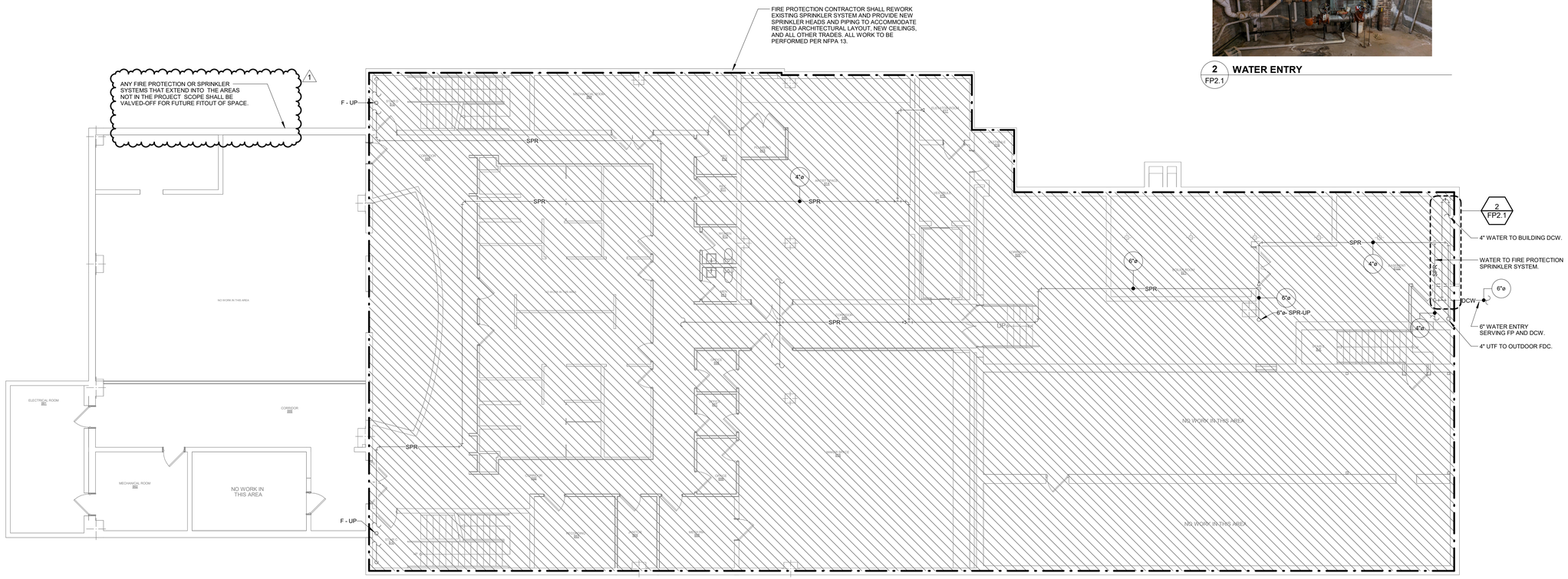

1 FP2.1 **BASEMENT FIRE PROTECTION PLAN**
1/8" = 1'-0"

SOL Harris/Day architecture
Designed for People. Designed for Life.
6677 Frank Avenue NW, North Canton, OH 44720 | 330.493.3722 | www.solharrisday.com

STATE OF OHIO
ERIC L WRIGHT
78568
REGISTERED PROFESSIONAL ENGINEER

not published, all rights reserved

Renovation for:
Coshocton Port Authority - Coshocton Collaborative
538 Main St
Coshocton, OH, 43812

MARK	DATE	DESCRIPTION
1	12/01/2023	ADDENDUM NO 1

PROJECT NO: 19.137
DATE: 11/10/2023

BASEMENT FIRE PROTECTION PLAN

FP2.1

NOTES:

1. EXISTING FIRE PROTECTION SYSTEM SUBSTANTIALLY COMPLETED. MAINS AND ALL ASSOCIATED FLOW AND TAMPER SWITCHES INSTALLED ALONG WITH BRANCHES TO SPRINKLER DROPS. SPRINKLER HEADS NOT INSTALLED.
2. ONLY MAINS AND GENERAL SYSTEM ROUTING SHOWN ON PLANS. FULL BRANCHES AND SPRINKLER SYSTEM NOT DETAILED AS INSTALLED.
3. EXISTING SYSTEM TO BE REVIEWED AND TESTED BY THE CERTIFIED SPRINKLER CONTRACTOR TO VERIFY THE EXISTING SYSTEM IS OPERATIONAL.

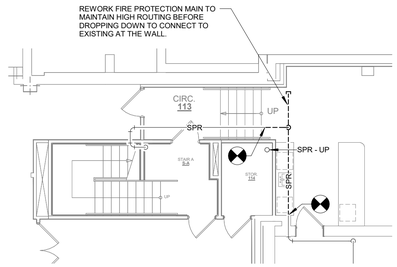

2 FP2.2 **PARTIAL FIRST FLOOR FIRE PROTECTION DEMOLITION PLAN**
1/8" = 1'-0"

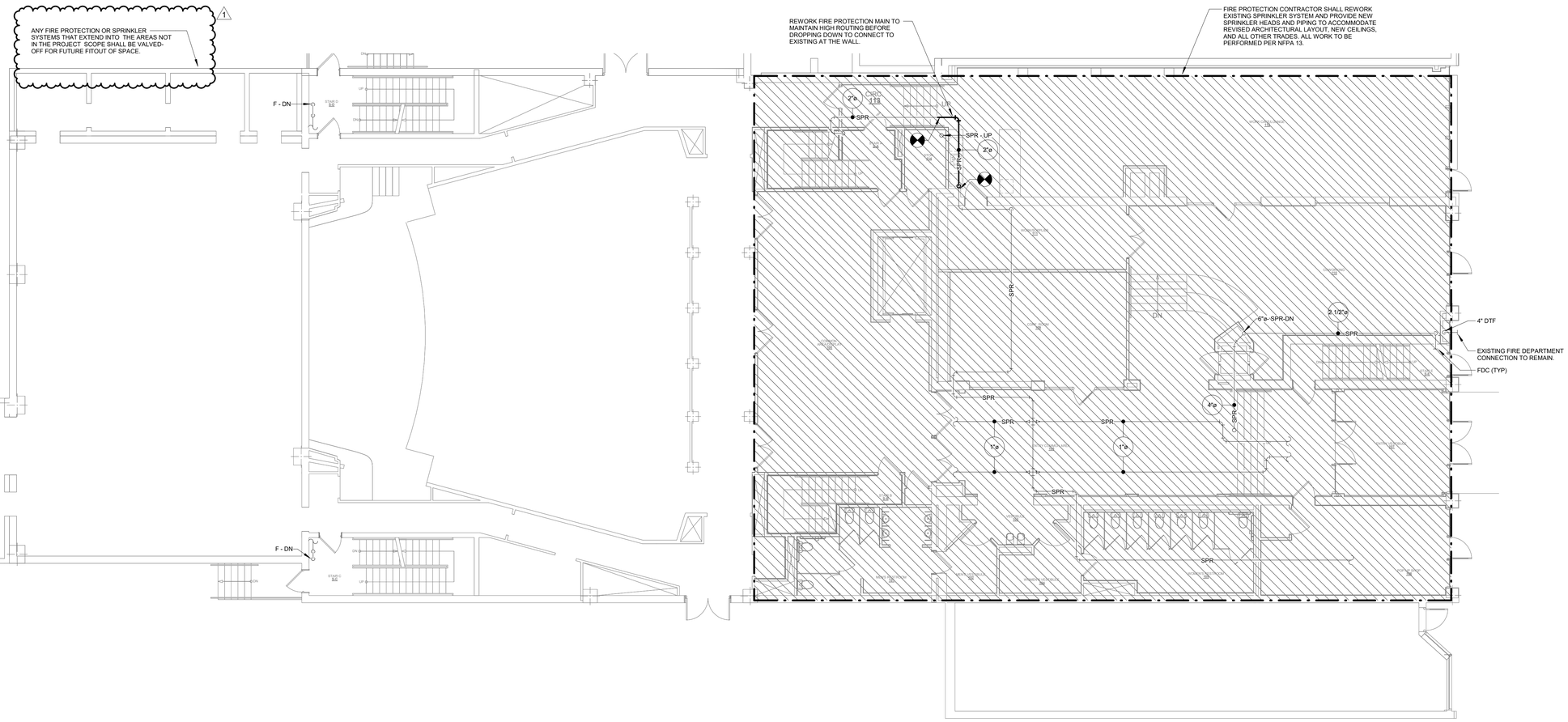

1 FP2.2 **FIRST FLOOR FIRE PROTECTION PLAN**
1/8" = 1'-0"

SOL Harris/Day architecture
Designed for People. Designed for Life.
6677 Frank Avenue NW, North Canton, OH 44720 | 330.493.3722 | www.solharrisday.com

STATE OF OHIO
ERIC
WRIGHT
78568
REGISTERED
PROFESSIONAL ENGINEER

not published, all rights reserved

Renovation for:
Coshocton Port Authority - Coshocton Collaborative
538 Main St
Coshocton, OH, 43812

MARK	DATE	DESCRIPTION
1	12/01/2023	ADDENDUM NO 1

PROJECT NO: 19.137
DATE: 11/10/2023

FIRST FLOOR FIRE PROTECTION PLAN

FP2.2

NOTES:

1. EXISTING FIRE PROTECTION SYSTEM SUBSTANTIALLY COMPLETED. MAINS AND ALL ASSOCIATED FLOW AND TAMPER SWITCHES INSTALLED ALONG WITH BRANCHES TO SPRINKLER DROPS. SPRINKLER HEADS NOT INSTALLED.
2. ONLY MAINS AND GENERAL SYSTEM ROUTING SHOWN ON PLANS. FULL BRANCHES AND SPRINKLER SYSTEM NOT DETAILED AS INSTALLED.
3. (1) EXISTING SYSTEM TO BE REVIEWED AND TESTED BY THE CERTIFIED SPRINKLER CONTRACTOR TO VERIFY THE EXISTING SYSTEM IS OPERATIONAL.

1 FP2.3 **SECOND FLOOR FIRE PROTECTION PLAN**
1/8" = 1'-0"

SōL Harris/Day architecture
Designed for People. Designed for Life.
6677 Frank Avenue NW, North Canton, OH 44720 | 330.493.3722 | www.solharrisday.com

STATE OF OHIO
ERIC L. WRIGHT 78568
REGISTERED PROFESSIONAL ENGINEER

not published; all rights reserved

Renovation for:
Coshocton Port Authority - Coshocton Collaborative
538 Main St
Coshocton, OH, 43812

MARK	DATE	DESCRIPTION
1	12/01/2023	ADDENDUM NO 1

PROJECT NO: 19.137
DATE: 11/10/2023

SECOND FLOOR FIRE PROTECTION PLAN

FP2.3

NOTES:

1. EXISTING FIRE PROTECTION SYSTEM SUBSTANTIALLY COMPLETED. MAINS AND ALL ASSOCIATED FLOW AND TAMPER SWITCHES INSTALLED ALONG WITH BRANCHES TO SPRINKLER DROPS. SPRINKLER HEADS NOT INSTALLED.
2. ONLY MAINS AND GENERAL SYSTEM ROUTING SHOWN ON PLANS. FULL BRANCHES AND SPRINKLER SYSTEM NOT DETAILED AS INSTALLED.
3. EXISTING SYSTEM TO BE REVIEWED AND TESTED BY THE CERTIFIED SPRINKLER CONTRACTOR TO VERIFY THE EXISTING SYSTEM IS OPERATIONAL.

1

ANY FIRE PROTECTION OR SPRINKLER SYSTEMS THAT EXTEND TO SERVE THE AREAS NOT IN THE PROJECT SCOPE SHALL BE VALVED-OFF FOR FUTURE FITOUT OF SPACE.

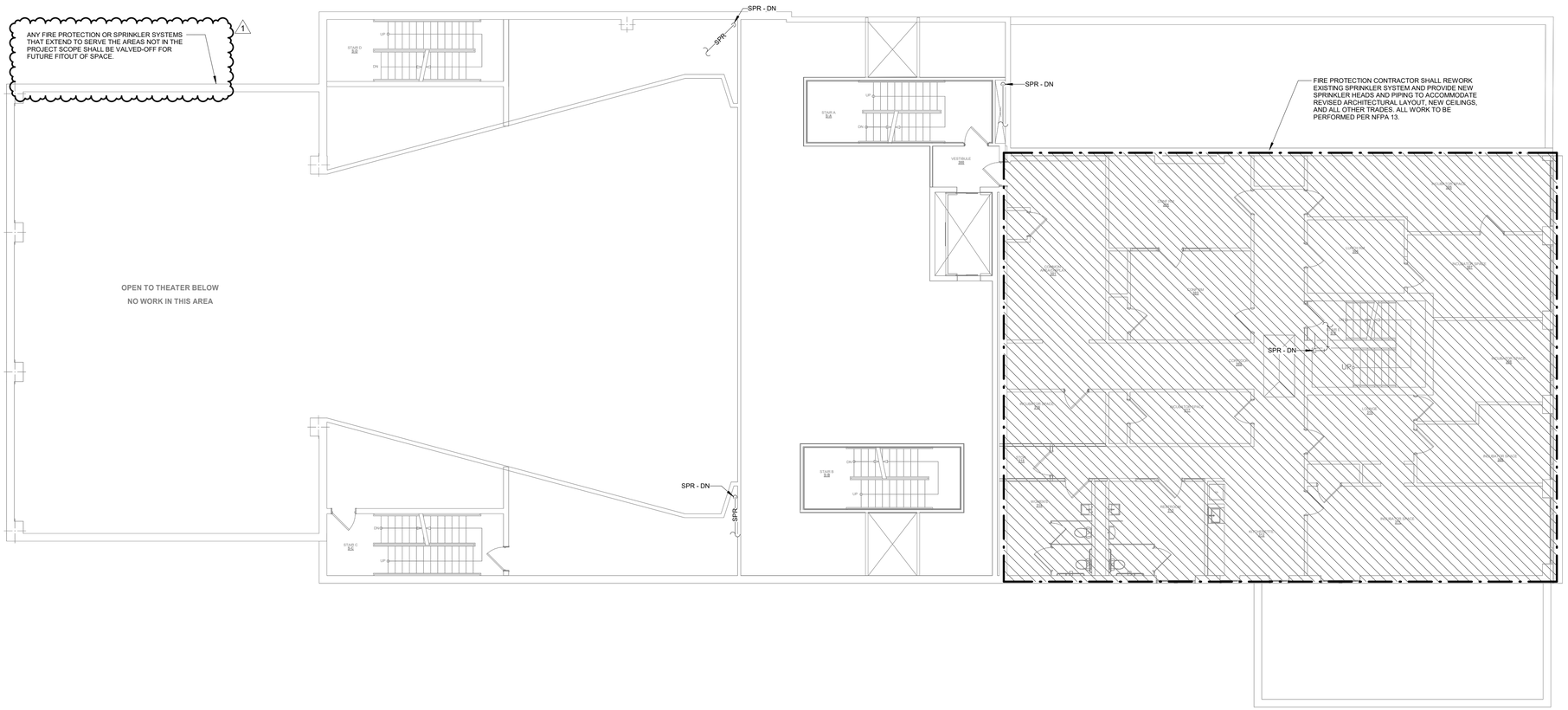

1 FP2.4 **THIRD FLOOR FIRE PROTECTION PLAN**
1/8" = 1'-0"

SOL Harris/Day architecture
Designed for People. Designed for Life.
6677 Frank Avenue NW, North Canton, OH 44720 | 330.493.3722 | www.solharrisday.com

STATE OF OHIO
ERIC L WRIGHT
78568
REGISTERED PROFESSIONAL ENGINEER

not published, all rights reserved

Renovation for:
Coshocton Port Authority - Coshocton Collaborative
538 Main St
Coshocton, OH, 43812

MARK	DATE	DESCRIPTION
1	12/01/2023	ADDENDUM NO 1

PROJECT NO: 19.137
DATE: 11/10/2023

THIRD FLOOR FIRE PROTECTION PLAN

FP2.4

SANITARY SEWER MINIMUM PIPE SLOPES	
PIPE SIZE	SLOPE (PER FOOT)
2-1/2" OR LESS	1/4" (2%)
3" TO 6"	1/8" (1%)

PIPE FITTING LEGEND

SYMBOL	DESCRIPTION
	CONCENTRIC REDUCER
	ECCENTRIC REDUCER
	CAP
	90° PIPE RISE OR DROP
	90° PIPE CONNECTION OUT OF BOTTOM
	90° PIPE CONNECTION OUT OF TOP
SANITARY STANDARD	90° PIPE CONNECTION OUT OF SIDE
	45° PIPE CONNECTION OUT OF SIDE
	PIPING RISER DOWN
	PIPING RISER UP

PIPING SYMBOLS LEGEND

SYMBOL	DESCRIPTION
	CHECK VALVE
	GATE VALVE
	MANUAL BALANCING VALVE
	BALL VALVE
	CHECK VALVE
	GATE VALVE
	BUTTERFLY VALVE
	GAS VALVE
	STRAINER WITH FULL SIZE VALVED BLOWDOWN WITH PLUGGED VALVE
	TIE-IN POINT
	PETE'S PLUG
	TEMPERATURE WELL
X-X PSI PI	PRESSURE GAUGE
X-X°F	THERMOMETER
	MANUAL AIR VALVE
	GATE VALVE WITH TAMPER SWITCH
	FLOW SWITCH
	REDUCED PRESSURE BACKFLOW PREVENTER
	PIPE GUIDE
	PIPE ANCHOR
CO	CLEANOUT
CO	CLEANOUT (AT BASE OF RISER)
FCO	CLEANOUT (FLUSH WITH FLOOR)
	EXPANSION JOINT
	MANUAL DRAIN VALVE WITH HOSE CONNECTION
	DOUBLE CHECK BACKFLOW PREVENTER
ERD	EMERGENCY (OVERFLOW) ROOF DRAIN
HB	HOSE BIBB
	MIXING VALVE
RD	ROOF DRAIN
FD	SANITARY FLOOR DRAIN
	TRAP PRIMER VALVE
	WATER HAMMER ARRESTOR
	WATER METER

PLUMBING ABBREVIATIONS LEGEND

ABBREVIATION	DESCRIPTION
A	AMP
ADA	AMERICANS WITH DISABILITIES ACT
AFF	ABOVE FINISHED FLOOR
ALT	ALTERNATE
ASJ	ALL SERVICE JACKET
B	BOILER
BAS	BUILDING AUTOMATION SYSTEM
CO	CLEANOUT
D	DRAIN
DCW	DOMESTIC COLD WATER
DEG	DEGREES
DHW	DOMESTIC HOT WATER
DIA	DIAMETER
DN	DOWN
DTF	DOWN THRU FLOOR
DTR	DOWN THRU ROOF
EC	ELECTRICAL CONTRACTOR
ETR	EXISTING TO REMAIN
EWC	ELECTRIC WATER COOLER
EWH	ELECTRIC WALL HEATER
EWT	ENTERING WATER TEMPERATURE
F	FIRE LINE
FCO	FLOOR CLEANOUT
FD	FLOOR DRAIN
FL	FLOOR
FPC	FIRE PROTECTION CONTRACTOR
GC	GENERAL CONTRACTOR
GEN	GENERATOR
GPH	GALLON PER HOUR
GPM	GALLON PER MINUTE
L	LAVATORY
LPG	LOW PRESSURE NATURAL GAS
LWT	LEAVING WATER TEMPERATURE
MAX	MAXIMUM
MBH	THOUSAND BRITISH THERMAL UNITS
MC	MECHANICAL CONTRACTOR
MFR	MANUFACTURER
MIN	MINIMUM
MU	MAKE UP WATER
NFPA	NATIONAL FIRE PROTECTION ASSOCIATION
P	PUMP
PC	PLUMBING CONTRACTOR
PRESS	PRESSURE
PVC	POLYVINYL CHLORIDE
QTY	QUANTITY
RHW	RECIRC HOT WATER
RPBP	REDUCED PRESSURE BACKFLOW PREVENTER
RR	RESTROOM
RV	RELIEF VALVE
S	SINK
SAN	SANITARY ABOVE FLOOR
SANB	SANITARY BELOW FLOOR
SPR	SPRINKLER
SS	STAINLESS STEEL
TYP	TYPICAL
UDCW	UNDERGROUND DOMESTIC COLD WATER
UTF	UP THRU FLOOR
UTR	UP THRU ROOF
V	VENT
W.C.	WATER COLUMN
WC	WATER CLOSET
WPD	WATER PRESSURE DROP

PLUMBING DRAWING LIST

SHEET NUMBER	SHEET NAME
P0.1	PLUMBING GENERAL INFORMATION
P2.1	BASEMENT PLUMBING PLAN
P2.2	FIRST FLOOR PLUMBING PLAN
P2.3	SECOND FLOOR PLUMBING PLAN
P2.4	THIRD FLOOR PLUMBING PLAN
P3.1	PLUMBING SCHEDULES AND DETAILS

GENERAL DRAWING NOTES:

1. MATERIALS ILLUSTRATED WITH LIGHT LINES ARE EXISTING TO REMAIN UNLESS NOTED OTHERWISE.
2. EXISTING CONDITIONS SHOWN ARE BASED ON REVIEW OF REFERENCE DRAWINGS AND GENERAL FIELD REVIEW. NOTIFY ENGINEER IF FIELD CONDITIONS DIFFER FROM WHAT IS SHOWN. CONTRACTOR IS RESPONSIBLE FOR FIELD MEASURING AND COORDINATING DIMENSIONS FOR TIE-IN AND INSTALLATION OF ALL NEW EQUIPMENT, DUCTWORK, PIPING AND OTHER MATERIALS PRIOR TO FABRICATION.
3. MATERIALS ILLUSTRATED WITH DARK DASHED LINES SHALL BE REMOVED. THE OWNER SHALL HAVE THE RIGHT TO RETAIN ANY MATERIALS ILLUSTRATED TO BE REMOVED. IF REQUESTED BY THE OWNER, THE CONTRACTOR SHALL REMOVE MATERIALS AND RELOCATE THEM TO THE OWNER'S SPECIFIED LOCATION OF STORAGE. ALL MATERIALS NOTED TO BE RELOCATED SHALL BE TEMPORARILY STORED AND PROTECTED DURING CONSTRUCTION BY THE CONTRACTOR UNLESS NOTED OTHERWISE. REMOVE ALL MATERIALS ASSOCIATED WITH EQUIPMENT AND DUCTWORK, INCLUDING PIPING, HANGERS, SUPPORTS, POWER, CONTROLS, INSULATION, ETC.
4. MATERIALS ILLUSTRATED WITH DARK LINES ARE NEW.
5. DO NOT INSTALL ANY MATERIALS IN A LOCATION THAT HINDERS MAINTENANCE ACCESS TO ANY MATERIAL THAT REQUIRES SERVICE OR MAINTENANCE.
6. THIS CONTRACTOR SHALL REMOVE AND RE-INSTALL EXISTING CEILING SYSTEMS WHERE NECESSARY TO ACCOMMODATE ABOVE CEILING WORK. PRIOR TO REMOVAL OF CEILINGS, CONTRACTOR SHALL PHOTOGRAPH CONDITION OF EXISTING CEILINGS AND SUBMIT PHOTO DOCUMENTATION TO OWNER AND ENGINEER. CEILING REMOVAL AND REINSTALLATION WORK SHALL BE CAREFULLY PERFORMED WITH CLEAN GLOVES TO MAINTAIN CEILING APPEARANCE. CONTRACTOR SHALL REPLACE ALL DAMAGED AND/OR DIRTY CEILING TILES TO MATCH EXISTING.
7. PATCH AND PAINT WALLS, CEILINGS AND FLOORS TO MATCH EXISTING AS REQUIRED TO ACCOMMODATE WORK.
8. AREAS OF THIS BUILDING UTILIZE A RETURN AIR PLENUM. ALL MATERIALS SHALL HAVE A MAXIMUM 25 FLAME SPREAD AND 50 SMOKE-DEVELOPED INDEX AS TESTED IN ACCORDANCE WITH ASTME 84 OR UL 723. WIRING SHALL BE PLENUM RATED PER NFPA 70.
9. SHUT-OFF VALVES SHALL BE INSTALLED IN ACCESSIBLE LOCATIONS. COORDINATE THE LOCATION OF ACCESS DOORS IN CEILINGS OR WALLS WITH THE GENERAL CONTRACTOR IF A VALVE IS REQUIRED TO BE LOCATED ABOVE AN INACCESSIBLE CEILING OR IN A WALL OR CHASE.
10. PROVIDE ESCUTCHEONS FOR ALL PIPING PENETRATIONS OF CEILINGS IN OCCUPIED AREAS.
11. FIRESTOP ALL PENETRATIONS OF RATED CEILINGS WITH APPROPRIATE FIRESTOPPING MATERIAL. REQUIRED MATERIAL ARE INDICATION IN THE SPECIFICATIONS.
12. UNLESS DETAILED OTHERWISE, SYSTEMS SHALL BE ORGANIZED SUCH THAT DUCTWORK MAINS ARE THE HIGHEST LEVEL AND ARE TIGHT TO BUILDING STRUCTURE. HVAC PIPING AND PLUMBING PIPING SHALL BE ROUTED BELOW THE DUCTWORK MAINS, AND FIRE PROTECTION PIPING SHALL BE BELOW ALL.

1

EQUIPMENT ALTERNATES

THE EXISTING PLUMBING SYSTEMS AND EQUIPMENT WERE INSTALLED IN 2000 DURING THE ORIGINAL RENOVATIONS OF THE FACILITY. CONSTRUCTION WAS HALTED WITHOUT THE SYSTEMS BEING FULLY COMPLETED OR EQUIPMENT STARTUP. THE EXISTING PLUMBING SYSTEMS SHALL BE FULLY TESTED AND VERIFIED THEY ARE OPERATIONAL. ALL EXISTING ROUGH-INS ARE BELIEVED TO BE COMPETED AND PREPPED FOR TESTING. ALL TESTING AND VERIFICATION SHALL BE COMPLETED BY THIS CONTRACTOR.

UNDER THE BASE BID WE ARE ASSUMING THE REUSE OF THE EXISTING EQUIPMENT AND ASSOCIATED SYSTEMS. THE ALTERNATES BELOW OUTLINE THE MAIN EQUIPMENT THAT MAY NEED REPLACEMENT UNDER THE PROJECT THAT WE WANT INCLUDED IN PRICING AS THE FULL REVIEW OF THE SYSTEMS IS STILL IN PROGRESS.

ALTERNATE #1
- PROVIDE NEW RTU TO REPLACE THE EXISTING CARRIER ROOFTOP UNIT EX-RTU-1 SERVING THE FRONT OFFICE SUPPLY AND RETURN AIR SYSTEMS. PROVIDE NEW ROOF CURB OR CURB ADAPTER FOR UNIT INSTALLATION AND REWORK EXISTING SUPPLY AND RETURN AIR DUCTWORK AS NECESSARY TO TIE-IN TO THE EXISTING SYSTEMS WITHIN THE BUILDING.

ALTERNATE #2
- PROVIDE NEW LIKE-FOR-LIKE NON-CONDENSING BOILER TO REPLACE THE EXISTING BRYAN BOILER EX-B-1. INSTALL UNIT ON EXISTING EQUIPMENT PAD AND RECONNECT TO EXISTING HEATING WATER PIPING, NATURAL GAS MAINS, AND FLUE DUCTWORK.

ALTERNATE #3
- PROVIDE NEW GAS FIRED DOMESTIC WATER HEATER TO REPLACE THE EXISTING A.O. SMITH WATER HEATER EX-DWH-1. RECONNECT TO EXISTING NATURAL GAS, EXHAUST FLUE, AND DOMESTIC WATER PIPING.

PLUMBING INSULATION SCHEDULE

NOTE:

1. FIBERGLASS INSULATION THICKNESSES ARE BASED ON A CONDUCTIVITY OF 0.23 BTU*IN/(HR * FT^2 *F) AT 75F MEAN TEMP.
2. ELASTOMERIC INSULATION THICKNESSES ARE BASED ON A CONDUCTIVITY OF 0.28 BTU*IN/(HR * FT^2 *F) AT 70F MEAN TEMP.
3. IN AREAS OF THE BUILDING THAT UTILIZE A RETURN AIR PLENUM. ALL MATERIALS SHALL HAVE A MAXIMUM 25 FLAME SPREAD AND 50 SMOKE-DEVELOPED INDEX AS TESTED IN ACCORDANCE WITH ASTME 84 OR UL 723. WIRING SHALL BE PLENUM RATED PER NFPA 70.

PVC PIPING NOT ALLOWED IN RETURN AIR CEILING PLENUMS.

SYSTEM	SIZES	TYPE	THICKNESS	JACKET
DOMESTIC COLD WATER ABOVE GROUND	**ALL SIZES**	FIBERGLASS	1"	VAPOR RETARDANT ASJ
DOMESTIC HOT AND RECIRC WATER ABOVE GROUND	**1.25" AND LESS**	FIBERGLASS	1"	ASJ
DOMESTIC HOT AND RECIRC WATER ABOVE GROUND	**1.5" AND LARGER**	FIBERGLASS	1-1/2"	ASJ
DOMESTIC WATER BELOW GROUND	**2" AND LARGER**	ELASTOMERIC	1/2"	NONE
DOMESTIC WATER BELOW GROUND	**2" AND SMALLER**	ELASTOMERIC	1/2"	NONE
FLOOR DRAIN BODIES WITH A/C CONDENSATE	**ALL SIZES**	ELASTOMERIC	1/2"	NONE
ROOF DRAIN BODIES	**ALL SIZES**	FIBERGLASS	1"	ASJ
STORM ABOVE GROUND HORIZONTAL PIPING	**ALL SIZES**	FIBERGLASS	1"	ASJ
TRAP PRIMER	**ALL SIZES**	ELASTOMERIC	1/2"	NONE
WATER COOLER TRAPS AND A/C DRAIN PIPING	**ALL SIZES**	ELASTOMERIC	1/2"	NONE

PLUMBING PIPING SYSTEM SCHEDULE

NOTE:

1: WHERE MULTIPLE MATERIALS ARE INDICATED, SELECTION IS INSTALLER'S CHOICE.

2: ALL OUTDOOR NATURAL GAS PIPING SHALL BE PRIMED AND PAINTED WITH TWO COATS MINIMUM OF WEATHERPROOF EPOXY PAINT; COLOR SHALL BE SELECTED BY ARCHITECT OR OWNER.

3. IN AREAS OF THE BUILDING THAT UTILIZE A RETURN AIR PLENUM. ALL MATERIALS SHALL HAVE A MAXIMUM 25 FLAME SPREAD AND 50 SMOKE-DEVELOPED INDEX AS TESTED IN ACCORDANCE WITH ASTME 84 OR UL 723. WIRING SHALL BE PLENUM RATED PER NFPA 70. PVC PIPING NOT ALLOWED IN RETURN AIR CEILING PLENUMS.

SYSTEM	SIZES	PIPE MATERIAL	FITTING MATERIAL	JOINT TYPE
DOMESTIC WATER ABOVE GROUND	**4" AND SMALLER**	TYPE L HARD COPPER	WROUGHT COPPER	SOLDERED
DOMESTIC WATER BELOW GROUND	**2" AND LARGER**	TYPE K COPPER	WROUGHT COPPER	SOLDERED
DOMESTIC WATER BELOW GROUND	**2" AND SMALLER**	TYPE K HARD COPPER	WROUGHT COPPER	SOLDERED
NATURAL GAS ABOVE GROUND	**2" AND SMALLER**	SCH 40 BLACK STEEL	MALLEABLE IRON	THREADED
NATURAL GAS ABOVE GROUND	**2.5" AND LARGER**	SCH 40 BLACK STEEL	FACTORY FORMED	WELDED
NATURAL GAS BELOW GROUND	**4" AND SMALLER**	PLASTIC, FLEXIBLE AS REQUIRED BY UTILITY	NONE	FUSION WELDED
STORM, SANITARY DRAIN, WASTE & VENT ABOVE AND BELOW GROUND	**ALL SIZES**	ASTM D2665 SCH 40 PVC	FACTORY FORMED PVC	PVC: SOLVENT WELDED WITH ASTM D2235 CEMENT
STORM, SANITARY DRAIN, WASTE & VENT ABOVE GROUND	**ALL SIZES**	CISPI 301 HUBLESS CAST IRON	CAST IRON NO HUB	CAST IRON: NO-HUB COMPRESSION GASKET WITH SS CLAMPS & SHIELD
STORM, SANITARY DRAIN, WASTE & VENT BELOW GROUND	**ALL SIZES**	ASTM A74 CAST IRON	CAST IRON WITH COMPRESSION GASKETS	HUB AND SPIGOT

PLUMBING FIRESTOP SCHEDULE

NOTE:

1. FIRESTOP ASSEMBLY TYPE (REQUIRED FIRESTOPPING MATERIALS) SHALL BE DETERMINED BY THE WALL OR FLOOR/CEILING ASSEMBLY AND PENETRATION TYPE AND SHALL BE UL LISTED AND TESTED IN ACCORDANCE WITH ASTM E814. FIRE RATING OF THE ASSEMBLY SHALL BE EQUIVALENT TO THE WALL OR FLOOR/CEILING ASSEMBLY RATING.
2. ACCEPTABLE FIRE BARRIER PRODUCTS: HILTI "FS-ONE", NELSON "FLAMESEAL" OR APPROVED EQUAL AS MANUFACTURED BY 3M.
3. IF REQUESTED, THE CONTRACTOR SHALL SHOW PROOF OF COMPLIANCE BY PROVIDING THE APPROPRIATE UL FIRESTOPPING SYSTEM NUMBER TO THE INSPECTION AUTHORITY HAVING JURISDICTION OR THE ARCHITECT/ENGINEER.

PENETRATION	RATING	U.L. SYSTEM
INSULATED METAL PIPE THROUGH GYPSUM BOARD	**1 OR 2 HOUR**	HILTI UL #WL5029 OR APPROVED EQUAL
INSULATED METAL PIPE THROUGH MASONRY	**4 HOUR**	HILTI UL #WJ5028 OR APPROVED EQUAL
INSULATED METAL PIPE THROUGH MASONRY/CONCRETE	**2 HOUR**	HILTI UL #CAJ5091 OR APPROVED EQUAL
INSULATED METAL PIPE THROUGH POURED CONCRETE FLOOR SLAB	**2 HOUR**	HILTI UL #FA5017 OR APPROVED EQUAL
METAL DUCT WITHOUT FIRE DAMPER THROUGH MASONRY/CONCRETE	**1 OR 2 HOUR**	HILTI UL #WJ7021 OR #WJ7022 OR APPROVED EQUAL
METAL DUCT WITHOUT FIRE DAMPER THROUGH GYPSUM BOARD	**1 OR 2 HOUR**	HILTI UL #WL7040 OR #WL7042 OR APPROVED EQUAL
METAL DUCT WITHOUT FIRE DAMPER THROUGH MASONRY/CONCRETE	**3 HOUR**	HILTI UL #CAJ7046 OR APPROVED EQUAL
METAL PIPE THROUGH GYPSUM BOARD	**1 OR 2 HOUR**	HILTI UL #WL1054 OR APPROVED EQUAL
METAL PIPE THROUGH MASONRY/CONCRETE	**2 HOUR**	HILTI UL #CAJ1291 OR APPROVED EQUAL
METAL PIPE THROUGH MASONRY/CONCRETE	**3 HOUR**	HILTI UL #CAJ1155 OR #CAJ1226 OR APPROVED EQUAL
METAL PIPE THROUGH POURED CONCRETE FLOOR SLAB	**3 HOUR**	HILTI UL #FA1017 OR APPROVED EQUAL
PLASTIC PIPE THROUGH GYPSUM BOARD	**1 OR 2 HOUR**	HILTI UL #WL2078 OR APPROVED EQUAL
PLASTIC PIPE THROUGH MASONRY/CONCRETE	**2 HOUR**	HILTI UL #CAJ2271 OR APPROVED EQUAL
PLASTIC PIPE THROUGH MASONRY/CONCRETE	**3 HOUR**	HILTI UL #CAJ2109 OR #CAJ2110 OR APPROVED EQUAL
PLASTIC PIPE THROUGH POURED CONCRETE FLOOR SLAB	**3 HOUR**	HILTI UL #FA2054 OR APPROVED EQUAL

SOL Harris/Day architecture
Designed for People. Designed for Life.
6677 Frank Avenue NW, North Canton, OH 44720 | 330.493.3722 | www.solharrisday.com

not published, all rights reserved

STATE OF OHIO
ERIC L WRIGHT
78568
REGISTERED PROFESSIONAL ENGINEER

Renovation for:
Coshocton Port Authority - Coshocton Collaborative
538 Main St
Coshocton, OH, 43812

MARK	DATE	DESCRIPTION
1	12/01/2023	ADDENDUM NO 1

PROJECT NO: 19.137
DATE: 11/10/2023

PLUMBING GENERAL INFORMATION

P0.1

PLUMBING NOTES:

1. REFER TO THE ATTACHED ORIGINAL DESIGN DOCUMENTS FOR ADDITIONAL REFERENCE INFORMATION ON PLUMBING SYSTEMS.
2. IT IS OUR UNDERSTANDING THE DOMESTIC WATER AND SANITARY SYSTEMS WERE SUBSTANTIALLY COMPLETED BEFORE ORIGINAL CONSTRUCTION CEASED IN 2000. THE EXISTING PLUMBING SYSTEMS SHALL BE FULLY TESTED AND VERIFIED THEY ARE OPERATIONAL. ALL EXISTING ROUGH-INS ARE BELIEVED TO BE COMPETED AND PREPPED FOR TESTING. ALL TESTING AND VERIFICATION SHALL BE COMPLETED BY THIS CONTRACTOR.
3. ALL EQUIPMENT AND SYSTEMS NOTED AS EXISTING TO REMAIN SHALL BE REVIEWED PRIOR TO REWORK. IF ANY LARGE DEFICIENCIES NOTED THE CONTRACTOR SHALL INFORM THE PROJECT MANAGER AND ENGINEER.
4. ALL PLUMBING FIXTURES REMAIN TO BE INSTALLED. ROUGH-INS COMPLETED FOR LOCATIONS BUT FINAL FIXTURE INSTALL NEVER COMPLETED. CONTRACTOR SHALL CONFIRM FIXTURE COMPLIANCE WITH EXISTING ROUGH-IN'S PRIOR TO FINAL PROCUREMENT.

2 P2.1 **SUMP PUMP (MECH ROOM)**

3 P2.1 **SUMP PUMP**

4 P2.1 **WATER HEATER**

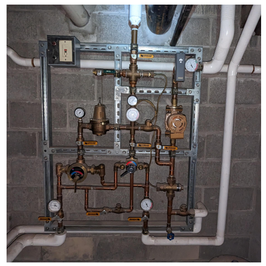

5 P2.1 **MIXING VALVES**

6 P2.1 **WATER ENTRY**

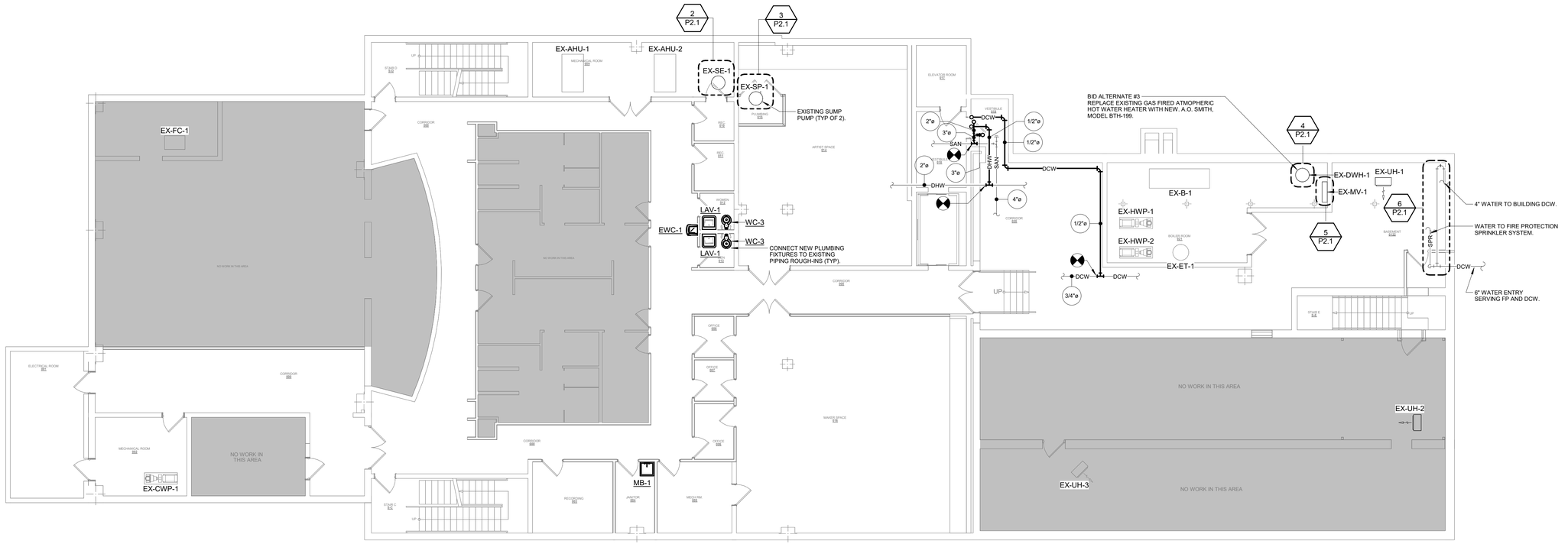

1 P2.1 **BASEMENT PLUMBING PLAN**
1/8" = 1'-0"

Sol Harris/Day architecture
Designed for People. Designed for Life.
6677 Frank Avenue NW, North Canton, OH 44720 | 330.493.3722 | www.solharrisday.com

STATE OF OHIO
ERIC L WRIGHT
78568
REGISTERED PROFESSIONAL ENGINEER

not published. all rights reserved

Renovation for:
Coshocton Port Authority - Coshocton Collaborative
538 Main St
Coshocton, OH, 43812

MARK	DATE	DESCRIPTION
1	12/01/2023	ADDENDUM NO 1

PROJECT NO: 19.137
DATE: 11/10/2023

BASEMENT PLUMBING PLAN

P2.1

PLUMBING NOTES:

1. REFER TO THE ATTACHED ORIGINAL DESIGN DOCUMENTS FOR ADDITIONAL REFERENCE INFORMATION ON PLUMBING SYSTEMS.
2. IT IS OUR UNDERSTANDING THE DOMESTIC WATER AND SANITARY SYSTEMS WERE SUBSTANTIALLY COMPLETED BEFORE ORIGINAL CONSTRUCTION CEASED IN 2000. THE EXISTING PLUMBING SYSTEMS SHALL BE FULLY TESTED AND VERIFIED THEY ARE OPERATIONAL. ALL EXISTING ROUGH-INS ARE BELIEVED TO BE COMPETED AND PREPPED FOR TESTING. ALL TESTING AND VERIFICATION SHALL BE COMPLETED BY THIS CONTRACTOR.
3. ALL EQUIPMENT AND SYSTEMS NOTED AS EXISTING TO REMAIN SHALL BE REVIEWED PRIOR TO REWORK. IF ANY LARGE DEFICIENCIES NOTED THE CONTRACTOR SHALL INFORM THE PROJECT MANAGER AND ENGINEER.
4. ALL PLUMBING FIXTURES REMAIN TO BE INSTALLED. ROUGH-INS COMPLETED FOR LOCATIONS BUT FINAL FIXTURE INSTALL NEVER COMPLETED. CONTRACTOR SHALL CONFIRM FIXTURE COMPLIANCE WITH EXISTING ROUGH-IN'S PRIOR TO FINAL PROCUREMENT.

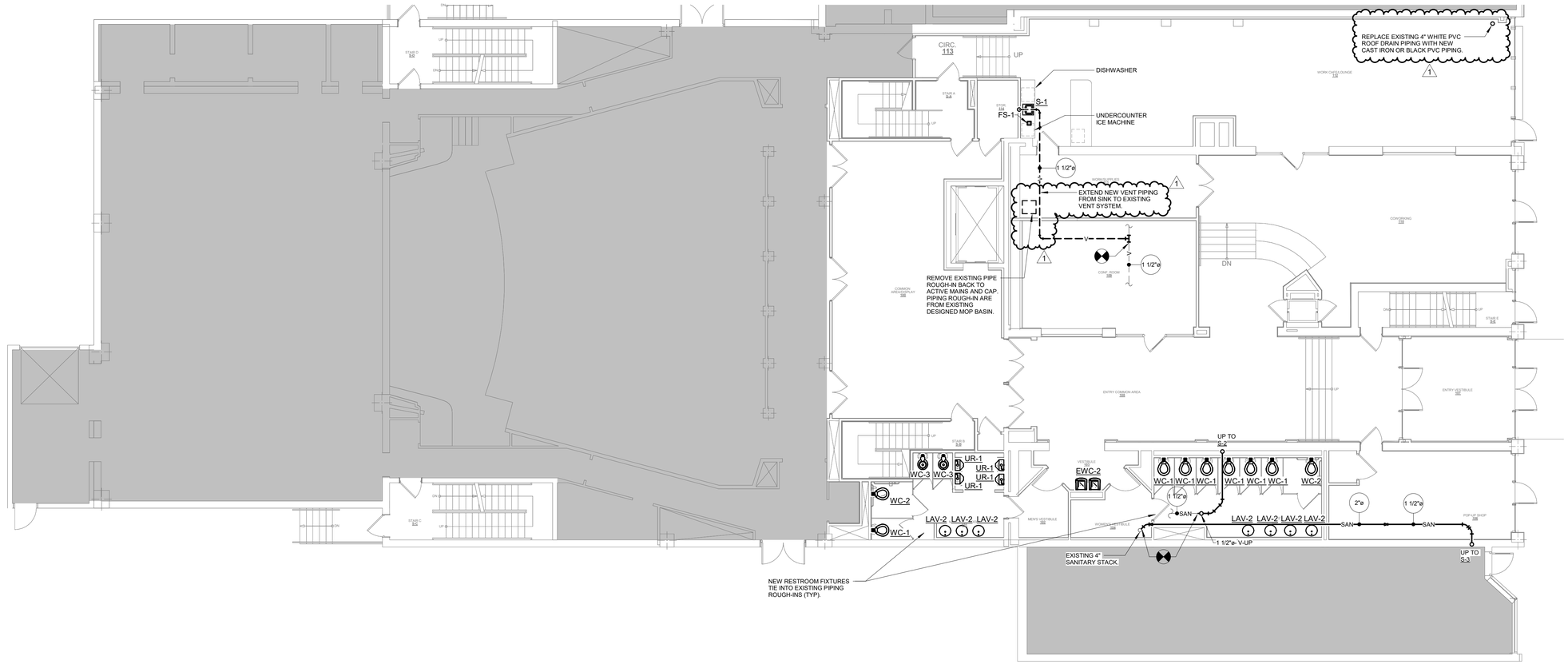

1 P2.2 **FIRST FLOOR PLUMBING PLAN**
1/8" = 1'-0"

SōL Harris/Day architecture

Designed for People. Designed for Life.

6677 Frank Avenue NW, North Canton, OH 44720 | 330.493.3722 | www.solharrisday.com

STATE OF OHIO
ERIC L. WRIGHT
78568
REGISTERED PROFESSIONAL ENGINEER

not published; all rights reserved

Renovation for:
Coshocton Port Authority - Coshocton Collaborative
538 Main St
Coshocton, OH, 43812

MARK	DATE	DESCRIPTION
1	12/01/2023	ADDENDUM NO 1

PROJECT NO: 19.137
DATE: 11/10/2023

FIRST FLOOR PLUMBING PLAN

P2.2

PLUMBING NOTES:

1. REFER TO THE ATTACHED ORIGINAL DESIGN DOCUMENTS FOR ADDITIONAL REFERENCE INFORMATION ON PLUMBING SYSTEMS.
2. IT IS OUR UNDERSTANDING THE DOMESTIC WATER AND SANITARY SYSTEMS WERE SUBSTANTIALLY COMPLETED BEFORE ORIGINAL CONSTRUCTION CEASED IN 2000. THE EXISTING PLUMBING SYSTEMS SHALL BE FULLY TESTED AND VERIFIED THEY ARE OPERATIONAL. ALL EXISTING ROUGH-INS ARE BELIEVED TO BE COMPETED AND PREPPED FOR TESTING. ALL TESTING AND VERIFICATION SHALL BE COMPLETED BY THIS CONTRACTOR.
3. ALL EQUIPMENT AND SYSTEMS NOTED AS EXISTING TO REMAIN SHALL BE REVIEWED PRIOR TO REWORK. IF ANY LARGE DEFICIENCIES NOTED THE CONTRACTOR SHALL INFORM THE PROJECT MANAGER AND ENGINEER.
4. ALL PLUMBING FIXTURES REMAIN TO BE INSTALLED. ROUGH-INS COMPLETED FOR LOCATIONS BUT FINAL FIXTURE INSTALL NEVER COMPLETED. CONTRACTOR SHALL CONFIRM FIXTURE COMPLIANCE WITH EXISTING ROUGH-IN'S PRIOR TO FINAL PROCUREMENT.

1

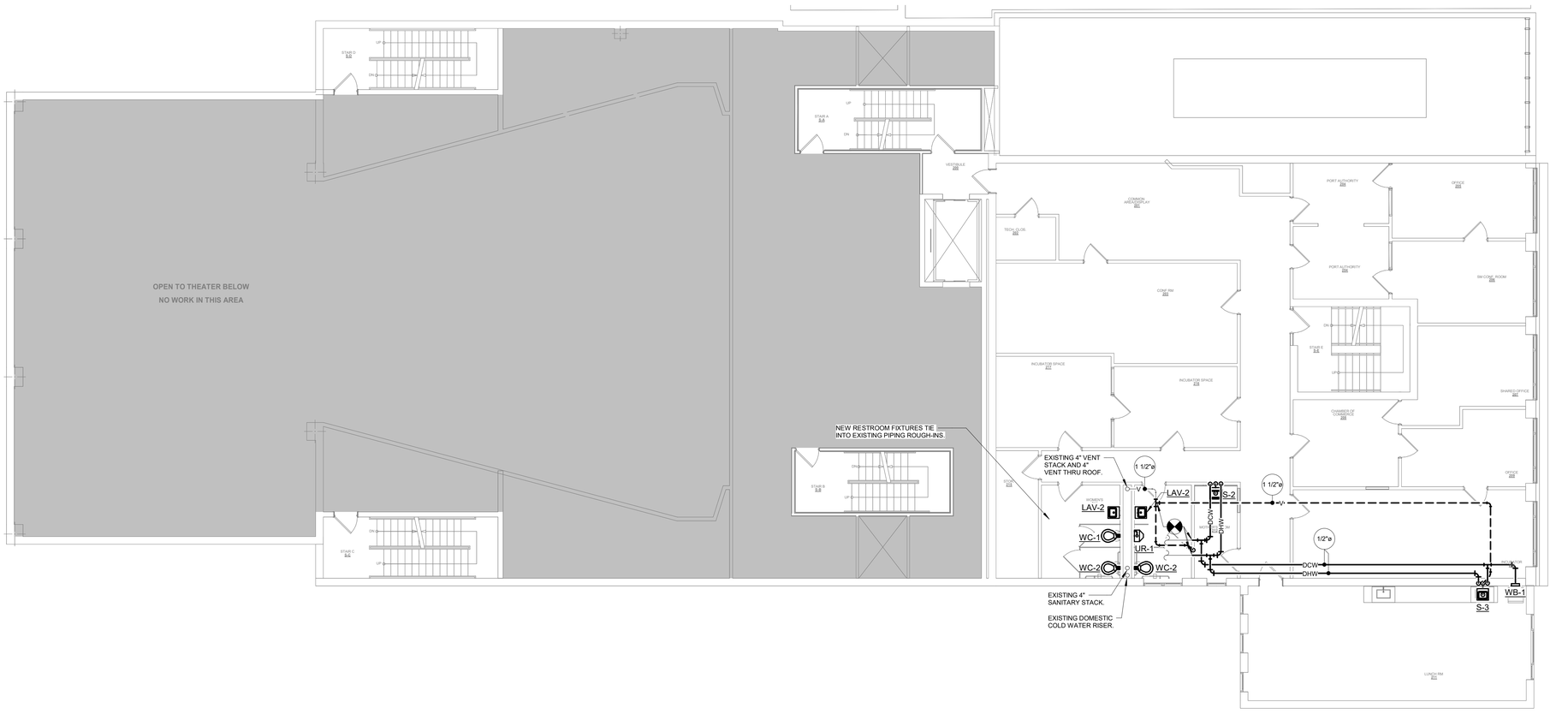

1 P2.3 **SECOND FLOOR PLUMBING PLAN**
1/8" = 1'-0"

SOL Harris/Day architecture
Designed for People. Designed for Life.
6677 Frank Avenue NW, North Canton, OH 44720 | 330.493.3722 | www.solharrisday.com

STATE OF OHIO
ERIC L. WRIGHT
78568
REGISTERED PROFESSIONAL ENGINEER

not published, all rights reserved

Renovation for:
Coshocton Port Authority - Coshocton Collaborative
538 Main St
Coshocton, OH, 43812

MARK	DATE	DESCRIPTION
1	12/01/2023	ADDENDUM NO 1

PROJECT NO: 19.137
DATE: 11/10/2023

SECOND FLOOR PLUMBING PLAN

P2.3

PLUMBING NOTES:

1. REFER TO THE ATTACHED ORIGINAL DESIGN DOCUMENTS FOR ADDITIONAL REFERENCE INFORMATION ON PLUMBING SYSTEMS.
2. IT IS OUR UNDERSTANDING THE DOMESTIC WATER AND SANITARY SYSTEMS WERE SUBSTANTIALLY COMPLETED BEFORE ORIGINAL CONSTRUCTION CEASED IN 2000. THE EXISTING PLUMBING SYSTEMS SHALL BE FULLY TESTED AND VERIFIED THEY ARE OPERATIONAL. ALL EXISTING ROUGH-INS ARE BELIEVED TO BE COMPETED AND PREPPED FOR TESTING. ALL TESTING AND VERIFICATION SHALL BE COMPLETED BY THIS CONTRACTOR.
3. ALL EQUIPMENT AND SYSTEMS NOTED AS EXISTING TO REMAIN SHALL BE REVIEWED PRIOR TO REWORK. IF ANY LARGE DEFICIENCIES NOTED THE CONTRACTOR SHALL INFORM THE PROJECT MANAGER AND ENGINEER.
4. ALL PLUMBING FIXTURES REMAIN TO BE INSTALLED. ROUGH-INS COMPLETED FOR LOCATIONS BUT FINAL FIXTURE INSTALL NEVER COMPLETED. CONTRACTOR SHALL CONFIRM FIXTURE COMPLIANCE WITH EXISTING ROUGH-IN'S PRIOR TO FINAL PROCUREMENT.

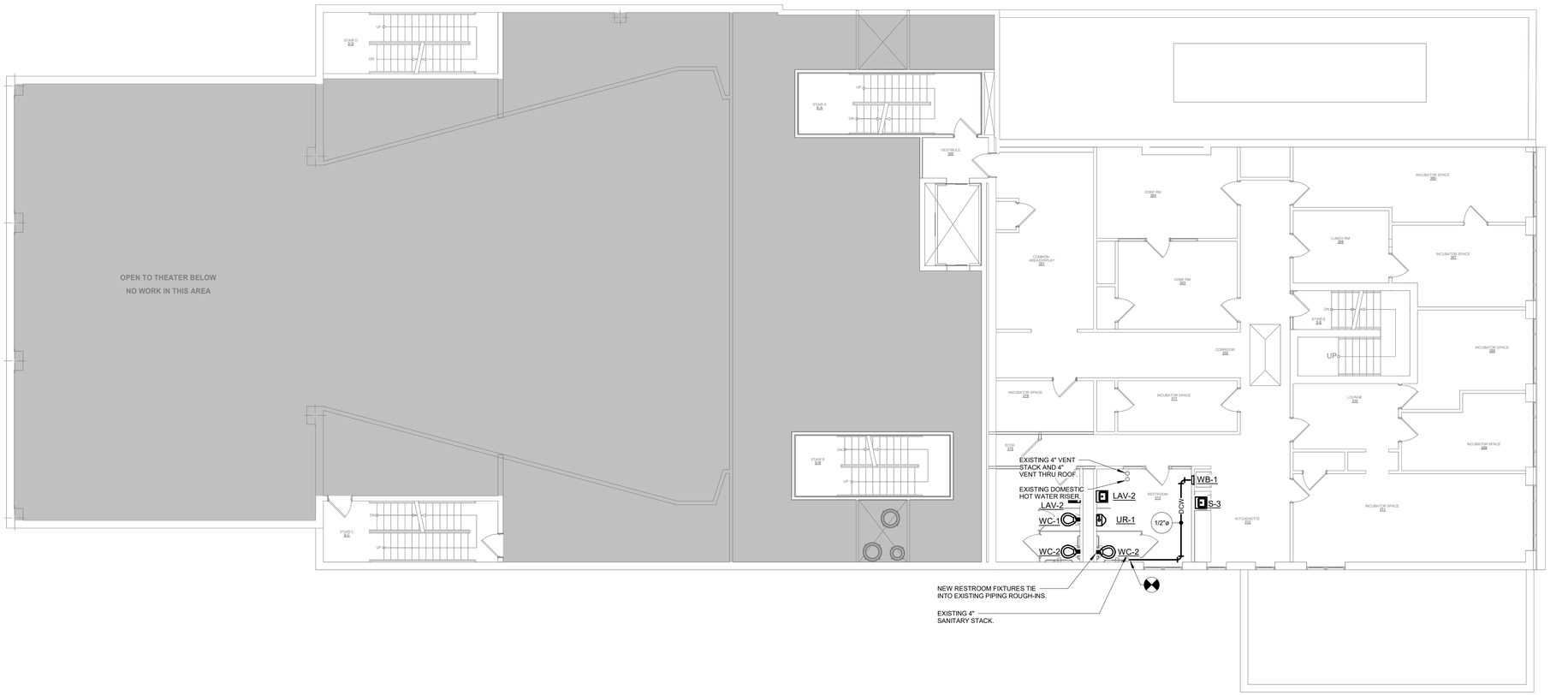

1 P2.4 **THIRD FLOOR PLUMBING PLAN**
1/8" = 1'-0"

SOL Harris/Day architecture
Designed for People. Designed for Life.
6677 Frank Avenue NW, North Canton, OH 44720 | 330.493.3722 | www.solharrisday.com

STATE OF OHIO
ERIC L. WRIGHT
78568
REGISTERED PROFESSIONAL ENGINEER

not published, all rights reserved

Renovation for:
Coshocton Port Authority - Coshocton Collaborative
538 Main St
Coshocton, OH, 43812

MARK	DATE	DESCRIPTION
1	12/01/2023	ADDENDUM NO 1

PROJECT NO: 19.137
DATE: 11/10/2023

THIRD FLOOR PLUMBING PLAN

P2.4

EXISTING WATER HEATER (TANK) SCHEDULE

MARK	MANUFACTURER	MODEL	TYPE	FUEL TYPE	INPUT CAPACITY (MBH)	WATER		VOLTS/PH
						STORAGE CAPACITY (GAL)	MAX GPH	
EX-DWH-1	A.O. SMITH	BTR 197	GAS FIRED	NATURAL GAS	199	100	193	120/1

ELECTRIC WATER COOLER WITH BOTTLE FILLER SCHEDULE

REMARKS:
1.

MARK	MANUFACTURER	MODEL	PERFORMANCE				CONNECTIONS			ELECTRICAL			REMARKS
			CAPACITY	EWT	LWT	DESIGN AMBIENT	DCW	SAN	VENT	VOLTS/PHASE	FLA	POWER SUPPLY	
EWC-1	ELKAY	LZSTL8WSLK	8 GPH	80	50	90	1/2"	1-1/2"	1-1/2"	115/1	6	PLUG-IN CORD	
EWC-2	ELKAY	LZSTL8WSLK	8 GPH	80	50	90	1/2"	1-1/2"	1-1/2"	115/1	6	PLUG-IN CORD	

WALL MOUNTED LAVATORY SCHEDULE

REMARKS:
1. PROVIDE ADA COMPLIANT MCGUIRE PRO-WRAP DHW AND DCW SUPPLIES AND TRAP.
2. PROVIDE THERMOSTATIC MIXING VALVE: LEONARD VALVE 170-LF OR APPOVED EQUAL.

MARK	FIXTURE		FAUCET				CONNECTIONS					REMARKS
	MANUFACTURER	MODEL	MFR	MODEL	HANDLES	OUTLET	DHW	DCW	110°F DHW	SAN	VENT	
LAV-1	AMERICAN STANDARD	MURRO 0958.008EC	CHICAGO FAUCETS	404-E70-317ABCP	4" WRISTBLADES	0.5GPM	1/2"	1/2"	-	1-1/2"	1-1/2"	1, 2

COUNTER MOUNTED LAVATORY SCHEDULE

REMARKS:
1. PROVIDE ADA COMPLIANT MCGUIRE PRO-WRAP DWH AND DCW SUPPLIES AND TRAP.
2. PROVIDE THERMOSTATIC MIXING VALVE: LEONARD VALVE 170-LF OR APPOVED EQUAL.

MARK	TYPE	FIXTURE		FAUCET				CONNECTIONS				REMARKS
		MANUFACTURER	MODEL	MFR	MODEL	HANDLES	OUTLET	DHW	DCW	SAN	VENT	
LAV-2	UNDERMOUNT OVAL	AMERICAN STANDARD	AQUALYN 0475.047	MOEN	8559BL	HANDS-FREE BATTERY	0.5 GPM	1/2"	1/2"	1-1/2"	1-1/2"	1, 2

MOP BASIN SCHEDULE

REMARKS:
1. FURNISH WITH HOSE HOLDER 65.700, MOP HANGER 65.600, AND WALL GUARDS.

MARK	FIXTURE			FAUCET				CONNECTIONS				REMARKS
	TYPE	MANUFACTURER	MODEL	MFR	MODEL	HANDLES	OUTLET	DHW	DCW	SAN	VENT	
MB-1	FIBERGLASS	MUSTEE	63M 24"x24"x10"	CHICAGO	897-CCP	2-3/8" LEVER	3/4" HOSE THREAD	1/2"	1/2"	3"	1-1/2"	1

WALL MOUNTED URINAL (FLUSH VALVE) SCHEDULE

REMARKS:
1. COORDINATE FLUSH VALVE HANDING WITH OWNER.

MARK	FIXTURE		VALVE			CONNECTIONS			ADA	REMARKS
	MANUFACTURER	MODEL	MFR	MODEL	FLOW RATE (GPF)	DCW	SAN	VENT	COMPLIANT	
UR-1	AMERICAN STANDARD	WASHBROOK 6590.001EC	AMERICAN STANDARD	6045.051.002 (MANUAL)	0.5	3/4"	2"	1-1/2"	YES	1

WALL MOUNTED WATER CLOSET (FLUSH VALVE) SCHEDULE

REMARKS:
1. COORDINATE FLUSH VALVE HANDING WITH OWNER.

MARK	FIXTURE		SEAT		VALVE			CONNECTIONS			ADA	REMARKS
	MANUFACTURER	MODEL	MFR	MODEL	MFR	MODEL	FLOW RATE (GPF)	DCW	SAN	VENT	COMPLIANT	
WC-1	AMERICAN STANDARD	AFWALL 2257.101	AMERICAN STANDARD	5901.1	AMERICAN STANDARD	6065.161.002 (BATTERY)	1.6	1"	4"	2"	NO	1
WC-2	AMERICAN STANDARD	AFWALL 2257.101	AMERICAN STANDARD	5901.1	AMERICAN STANDARD	6047.161.002 (MANUAL)	1.6	1"	4"	2"	YES	1

FLOOR MOUNTED WATER CLOSET (FLUSH VALVE) SCHEDULE

REMARKS:
1. COORDINATE FLUSH VALVE HANDING WITH OWNER.

MARK	FIXTURE		SEAT		VALVE			CONNECTIONS			ADA	REMARKS
	MANUFACTURER	MODEL	MFR	MODEL	MFR	MODEL	FLOW RATE (GPF)	DCW	SAN	VENT	COMPLIANT	
WC-3	AMERICAN STANDARD	MADERA FLOWISE 3461.001	AMERICAN STANDARD	5901.1	AMERICAN STANDARD	6047.161.002 (MANUAL)	1.6	1"	4"	2"	YES	1

STAINLESS STEEL SINK SCHEDULE

REMARKS:
1. GARBAGE DISPOSAL: INSINKERATOR, MODEL LC-50.

MARK	FIXTURE				FAUCET				CONNECTIONS				REMARKS
	TYPE	MANUFACTURER	MODEL	STRAINER	MANUFACTURER	MODEL	HANDLES	OUTLET	DHW	DCW	SAN	VENT	
S-1	DROP-IN	JUST MANUFACTURER	SL-ADA-17519-A-GR	J-35	CHICAGO FAUCETS	201-AE-35ABCP	2-3/8" LEVER	1.5 GPM	1/2"	1/2"	1-1/2"	1-1/2"	1
S-2	INTEGRAL TO COUNTER	BY GC	-	-	CHICAGO FAUCETS	201-AE-35ABCP	2-3/8" LEVER	1.5 GPM	1/2"	1/2"	1-1/2"	1-1/2"	
S-3	INTEGRAL TO COUNTER	BY GC	-	-	CHICAGO FAUCETS	201-AE-35ABCP	2-3/8" LEVER	1.5 GPM	1/2"	1/2"	1-1/2"	1-1/2"	1

WALL BOX SCHEDULE

REMARKS:
1. CONTRACTOR SHALL COORDINATE MODEL NUMBER WITH PIPE MATERIAL.

MARK	MANUFACTURER	MODEL	SERVICE	CONNECTIONS			REMARKS
				DHW	DCW	SAN	
WB-1	IPS CORPORATION (GUY GRAY)	MIB1AB	ICE MACHINE	-	1/2"	-	1

WATER HEATER (TANK) SCHEDULE (ALT #3)

REMARKS:
1. PROVIDE EQUIPMENT UNDER ALTERNATE #3.
2. FURNISH WITH CONDENSATE NEUTRALIZATION KIT.
3. FURNISH WITH CONCENTRIC VENT KIT.

MARK	MANUFACTURER	MODEL	TYPE	FUEL TYPE	INPUT CAPACITY (MBH)	WATER		VOLTS/PH	DISCONNECT BY	REMARKS
						STORAGE CAPACITY (GAL)	MAX GPH (@90 RISE)			
<varies>	<varies>	<varies>	<varies>	<varies>	<varies>	<varies>	<varies>	<varies>	<varies>	<varies>

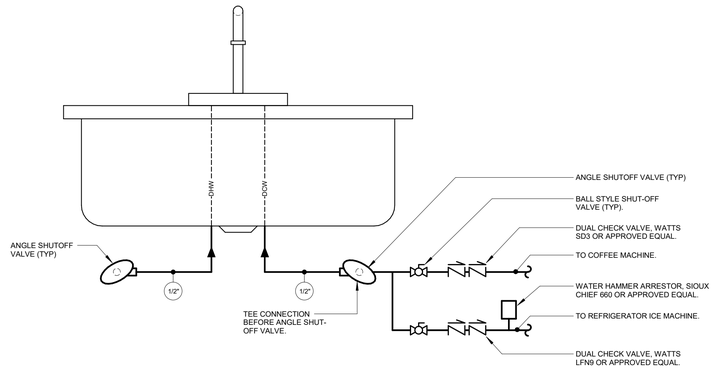

2 P3.1 SINK PIPING DETAIL - WITH APPLIANCE
NTS

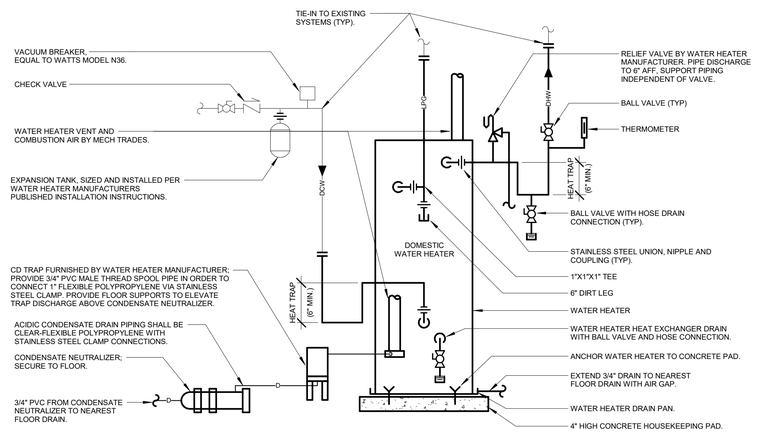

1 P3.1 DOMESTIC WATER HEATER - PIPING DETAIL
NTS

Sol Harris/Day architecture
Designed for People. Designed for Life.
6677 Frank Avenue NW, North Canton, OH 44720 | 330.493.3722 | www.solharrisday.com

STATE OF OHIO
ERIC L WRIGHT
78568
REGISTERED PROFESSIONAL ENGINEER
not published, all rights reserved

Renovation for:
Coshocton Port Authority - Coshocton Collaborative
538 Main St
Coshocton, OH, 43812

MARK	DATE	DESCRIPTION

PROJECT NO: 19.137
DATE: 11/10/2023

PLUMBING SCHEDULES AND DETAILS

P3.1

CONTROL SYMBOLS LEGEND

SYMBOL	DESCRIPTION
	WIRE TO SF, RF, AND/OR EF SHUTDOWN CONTACTS
STR	MOTOR STARTER WITH S/S CONTACTS
VFD	VARIABLE FREQUENCY DRIVE
SD	DUCT MOUNTED SMOKE DETECTOR
AFMS	AIRFLOW MEASURING STATION
	SINGLE POINT TEMPERATURE SENSOR (DUCT MOUNTED)
	MOTORIZED DAMPER
T	ADJUSTABLE DDC THERMOSTAT (WALL MOUNTED)
T	TEMP SENSOR (READ ONLY, WALL MOUNTED)
T A	TEMP SENSOR WITH LIMITED ADJUSTMENT RANGE (WALL MOUNTED)
O	DUAL CONTACT OCCUPANCY SENSOR.
DPT	DIFFERENTIAL PRESSURE TRANSMITTER
SPL	STATIC PRESSURE LOW-LIMIT SWITCH
SPH	STATIC PRESSURE HIGH-LIMIT SWITCH
CSR	CURRENT SENSING RELAY
SPT	STATIC PRESSURE TRANSMITTER
	DUCT AVERAGING TEMPERATURE SENSOR
	LOW-LIMIT TEMPERATURE SWITCH
	THREE-WAY TCV
	TWO-WAY TCV
AI - X	ANALOG INPUT TO BAS
AO - X	ANALOG OUTPUT TO BAS
DI - X	DIGITAL INPUT TO BAS
DO - X	DIGITAL OUTPUT TO BAS
INT - X	INTEGRATION TO BAS

DUCTWORK FITTING LEGEND

SYMBOL	DESCRIPTION
	45° ENTRY BOOT TAKE-OFF (RECTANGULAR TO RECTANGULAR)
	90° ENTRY BOOT TAKE-OFF (CONICAL/BELLMOUTH FITTING)
	CONVERGING/DIVERGING TRANSITION
	DUCT CAP
UP	DUCT RISE (IN THE DIRECTION OF AIRFLOW)
DN	DUCT DROP (IN THE DIRECTION OF AIRFLOW)
	MITERED DUCT ELBOW WITH TURNING VANES
	RETURN, EXHAUST OR RELIEF AIR DUCT DOWN
	RETURN, EXHAUST OR RELIEF AIR DUCT UP
	SUPPLY OR OUTSIDE AIR DUCT DOWN
	SUPPLY OR OUTSIDE AIR DUCT DOWN
	SQUARE TO ROUND TRANSITION
	DOUBLE WALL DUCT
	INTERNALLY LINED DUCTWORK

MECHANICAL PIPING SYMBOLS LEGEND

SYMBOL	DESCRIPTION
	AUTOMATIC PRESSURE INDEPENDENT BALANCING VALVE
	MANUAL BALANCING VALVE
	2-WAY TEMPERATURE CONTROL VALVE
	3-WAY TEMPERATURE CONTROL VALVE
	BALL VALVE
	CHECK VALVE
	GATE VALVE
	BUTTERFLY VALVE
	STRAINER WITH FULL SIZE VALVED BLOWDOWN WITH PLUGGED VALVE
	CONCENTRIC REDUCER
	ECCENTRIC REDUCER
	PETE'S PLUG
	TEMPERATURE WELL
	TIE-IN POINT
X-X PSI	PRESSURE GAUGE
X-X°F	THERMOMETER
	MANUAL AIR VALVE
	REDUCED PRESSURE BACKFLOW PREVENTER
	PRESSURE REDUCING VALVE
	SPHERICAL RUBBER TYPE FLEXIBLE CONNECTOR
	WOVEN MESH TYPE FLEXIBLE CONNECTOR
	UNION
	PRESSURE RELIEF VALVE
	CAPPED THREADED HOSE CONNECTION

VIEW SYMBOL LEGEND

X / X-X	SECTION CUT
X / X-X	ENLARGED PLAN
X / X-X	DETAIL CALLOUT

PIPE FITTING LEGEND

SYMBOL	DESCRIPTION
	CONCENTRIC REDUCER
	ECCENTRIC REDUCER
	CAP
	90° PIPE RISE OR DROP
	90° PIPE CONNECTION OUT OF BOTTOM
	90° PIPE CONNECTION OUT OF TOP
SANITARY STANDARD	90° PIPE CONNECTION OUT OF SIDE
	45° PIPE CONNECTION OUT OF SIDE
	PIPING RISER DOWN
	PIPING RISER UP

DUCTWORK ACCESSORIES LEGEND

SYMBOL	DESCRIPTION
("MARK"-"CFM") XX-XXX	4-WAY DIFFUSER
("MARK"-"CFM") XX-XXX	3-WAY DIFFUSER
("MARK"-"CFM") XX-XXX	2-WAY DIFFUSER
("MARK"-"CFM") XX-XXX	RETURN / EXHAUST GRILLE - CEILING MOUNTED
("MARK"-"CFM") XX-XXX	SUPPLY DIFFUSER - SIDEWALL MOUNTED
	TIE-IN POINT
FD	FIRE DAMPER
DD	DUCT DETECTOR
	MANUAL BALANCE DAMPER

HVAC PIPING SYSTEM SCHEDULE

NOTE:
1: WHERE MUTLIPLE MATERIALS ARE INDICATED, SELECTION IS INSTALLER'S CHOICE.

SYSTEM	SIZES	PIPE MATERIAL	FITTING MATERIAL	JOINT TYPE
A/C CONDENSATE DRAIN	**ALL SIZES**	TYPE L HARD COPPER OR PVC (NOT IN PLENUMS)	WROUGHT COPPER OR PVC	SOLDERED OR SOLVENT WELD
HEATING WATER	**2" AND SMALLER**	TYPE L HARD COPPER OR SCH 40 BLACK STEEL	WROUGHT COPPER OR 125LB CAST IRON	SOLDERED, PRESSED OR SCREWED
HEATING WATER	**2.5" TO 10"**	SCH 40 BLACK STEEL	SCH 40 FACTORY FORMED	WELDED OR GROOVED COUPLINGS
REFRIGERANT	**ALL SIZES**	TYPE L HARD COPPER	WROUGHT COPPER	SOLDERED OR PRESSED

MECHANICAL FIRESTOP SCHEDULE

NOTE:
1. FIRESTOP ASSEMBLY TYPE (REQUIRED FIRESTOPPING MATERIALS) SHALL BE DETERMINED BY THE WALL OR FLOOR/CEILING ASSEMBLY AND PENETRATION TYPE AND SHALL BE UL LISTED AND TESTED IN ACCORDANCE WITH ASTM E814. FIRE RATING OF THE ASSEMBLY SHALL...
2. ACCEPTABLE FIRE BARRIER PRODUCTS: HILTI "FS-ONE", NELSON "FLAMESEAL" OR APPORVED EQUAL AS MANUFACTURED BY 3M.
3. IF REQUESTED, THE CONTRACTOR SHALL SHOW PROOF OF COMPLIANCE BY PROVIDING THE APPROPRIATE UL FIRESTOPPING SYSTEM NUMBER TO THE INSPECTION AUTHORITY HAVING JURISDICTION OR THE ARCHITECT/ENGINEER.

PENETRATION	RATING	U.L. SYSTEM
INSULATED METAL PIPE THROUGH GYPSUM BOARD	**1 OR 2 HOUR**	HILTI UL #WL5029 OR APPROVED EQUAL
INSULATED METAL PIPE THROUGH MASONRY	**4 HOUR**	HILTI UL #WJ5028 OR APPROVED EQUAL
INSULATED METAL PIPE THROUGH MASONRY/CONCRETE	**2 HOUR**	HILTI UL #CAJ5091 OR APPROVED EQUAL
INSULATED METAL PIPE THROUGH POURED CONCRETE FLOOR SLAB	**2 HOUR**	HILTI UL #FA5017 OR APPROVED EQUAL
METAL DUCT WITHOUT FIRE DAMPER THROUGH MASONRY/CONCRETE	**1 OR 2 HOUR**	HILTI UL #WJ7021 OR #WJ7022 OR APPROVED EQUAL
METAL DUCT WITHOUT FIRE DAMPER THROUGH GYPSUM BOARD	**1 OR 2 HOUR**	HILTI UL #WL7040 OR #WL7042 OR APPROVED EQUAL
METAL DUCT WITHOUT FIRE DAMPER THROUGH MASONRY/CONCRETE	**3 HOUR**	HILTI UL #CAJ7046 OR APPROVED EQUAL
METAL PIPE THROUGH GYPSUM BOARD	**1 OR 2 HOUR**	HILTI UL #WL1054 OR APPROVED EQUAL
METAL PIPE THROUGH MASONRY/CONCRETE	**2 HOUR**	HILTI UL #CAJ1291 OR APPROVED EQUAL
METAL PIPE THROUGH MASONRY/CONCRETE	**3 HOUR**	HILTI UL #CAJ1155 OR #CAJ1226 OR APPROVED EQUAL
METAL PIPE THROUGH POURED CONCRETE FLOOR SLAB	**3 HOUR**	HILTI UL #FA1017 OR APPROVED EQUAL
PLASTIC PIPE THROUGH GYPSUM BOARD	**1 OR 2 HOUR**	HILTI UL #WL2078 OR APPROVED EQUAL
PLASTIC PIPE THROUGH MASONRY/CONCRETE	**2 HOUR**	HILTI UL #CAJ2271 OR APPROVED EQUAL
PLASTIC PIPE THROUGH MASONRY/CONCRETE	**3 HOUR**	HILTI UL #CAJ2109 OR #CAJ2110 OR APPROVED EQUAL
PLASTIC PIPE THROUGH POURED CONCRETE FLOOR SLAB	**3 HOUR**	HILTI UL #FA2054 OR APPROVED EQUAL

DUCT INSULATION SCHEDULE

NOTE:
1. FIBERGLASS INSULATION THICKNESSES ARE BASED ON A CONDUCTIVITY OF 0.23 BTU*IN/(HR * FT^2 *F) AT 75F MEAN TEMP.
2. CLOSED CELL POLYMERIC INSULATION THICKNESSES ARE BASED ON A CONDUCTIVITY OF 0.28 BTU*IN/(HR * FT^2 *F) AT 70F MEAN TEMP.

SYSTEM	LOCATION	TYPE	THICKNESS	JACKET
OUTSIDE AIR AND COMBUSTION AIR	**CONCEALED**	FIBERGLASS DUCT WRAP	2"	GLASS CLOTH JACKET
OUTSIDE AIR AND COMBUSTION AIR	**EXPOSED**	FIBERGLASS DUCT BOARD	2"	GLASS CLOTH JACKET
SUPPLY, MIXED AND RELIEF AIR	**CONCEALED IN AIR-CONDITIONED SPACE**	FIBERGLASS DUCT WRAP	2"	FOIL FACED VAPOR SEAL
SUPPLY, MIXED AND RELIEF AIR	**EXPOSED IN OCCUPIABLE AIR CONDITIONED AREAS**	NO INSULATION	-	COORDINATE FINISHES WITH ARCHITECT. PROVIDE WITH PAINT GRIP FINISH FOR ANY PAINTED DUCTWORK.

HVAC PIPING INSULATION SCHEDULE

NOTE:
1. FIBERGLASS INSULATION THICKNESSES ARE BASED ON A CONDUCTIVITY OF 0.23 BTU*IN/(HR * FT^2 *F) AT 75F MEAN TEMP.
2. ELASTOMERIC INSULATION THICKNESSES ARE BASED ON A CONDUCTIVITY OF 0.28 BTU*IN/(HR * FT^2 *F) AT 70F MEAN TEMP.

SYSTEM	SIZES	TYPE	THICKNESS	JACKET	OUTDOOR INSTALLATION
AC CONDENSATE PIPING	**ALL SIZES**	FIBERGLASS	1"	VAPOR RETARDANT JACKET	N/A
HEATING WATER PIPING	**1-1/4" AND SMALLER**	FIBERGLASS	1-1/2"	ASJ	3" THICK FIBERGLASS WITH ALUMINUM JACKET
HEATING WATER PIPING	**1-1/2" AND LARGER**	FIBERGLASS	2"	ASJ	3" THICK FIBERGLASS WITH ALUMINUM JACKET
REFRIGERANT PIPING - SUCTION, LIQUID AND HOT GAS	**ALL SIZES**	ELASTOMERIC	1"	NONE	PVC JACKET

MECHANICAL ABBREVIATIONS LEGEND

ABBREVIATION	DESCRIPTION
A	AMP
AC	AIR CONDITIONING UNIT
AD	ACCESS DOOR
AFF	ABOVE FINISHED FLOOR
AHU	AIR HANDLING UNIT
ALT	ALTERNATE
APD	AIR PRESSURE DROP
AS	AIR SEPARATOR
ASJ	ALL SERVICE JACKET
B	BOILER
BAS	BUILDING AUTOMATION SYSTEM
BHP	BRAKE HORSEPOWER
BTU	BRITISH THERMAL UNIT
BV	BOILER VENT
CA	COMBUSTION AIR
CC	COOLING COIL
CD	CONDENSATE DRAIN
CFM	CUBIC FEET PER MINUTE
CH	CHILLER
CHW	CHILLED WATER
COMP	COMPRESSOR
CU	CONDENSING UNIT
CWP	CHILLED WATER PUMP
CWR	CHILLED WATER RETURN
CWS	CHILLED WATER SUPPLY
DB	DRY BULB TEMPERATURE
DCW	DOMESTIC COLD WATER
DD	DUCT MOUNTED DUCT DETECTOR
DDC	DIRECT DIGITAL CONTROLS
DIA	DIAMETER
DPT	DIFFERENTIAL PRESSURE TRANSMITTER
DTF	DOWN THRU FLOOR
DTR	DOWN THRU ROOF
EA	EXHAUST AIR
EAT	ENTERING AIR TEMPERATURE
EC	ELECTRICAL CONTRACTOR
EDB	ENTERING DRY-BULB TEMP
EER	ENERGY EFFICIENCY RATIO
EF	EXHAUST FAN
ESP	EXTERNAL STATIC PRESSURE
ET	EXPANSION TANK
ETR	EXISTING TO REMAIN
EWB	ENTERING WET-BULB TEMPERATURE
EWH	ELECTRIC WALL HEATER
EWT	ENTERING WATER TEMPERATURE
FCU	FAN COIL UNIT
FD	FIRE DAMPER
FLA	FULL LOAD AMPS
GC	GENERAL CONTRACTOR
GPM	GALLON PER MINUTE
HC	HEATING COIL
HP	HORSEPOWER
HWP	HEATING WATER PUMP
HWR	HEATING WATER RETURN
HWS	HEATING WATER SUPPLY
IEER	INTEGRATED ENERGY EFFICIENCY RATIO
KW	KILOWATT
L	LOUVER
LAT	LEAVING AIR TEMPERATURE
LDB	LEAVING DRY-BULB TEMP
LWB	LEAVING WET-BULB TEMPERATURE
LWT	LEAVING WATER TEMPERATURE
MAX	MAXIMUM
MBH	THOUSAND BRITISH THERMAL UNITS
MC	MECHANICAL CONTRACTOR
MCA	MINIMUM CIRCUIT AMPACITY
MERV	MINIMUM EFFICIENCY REPORTING VALUE
MFR	MANUFACTURER
MOCP	MAXIMUM OVERCURRENT PROTECTION
MOD	MOTOR OPERATED DAMPER
NFPA	NATIONAL FIRE PROTECTION ASSOCIATION
OA	OUTSIDE AIR
OBD	OPPOSED BLADE DAMPER
P	PUMP
RA	RETURN AIR
RL	REFRIGERANT LIQUID
RS	REFRIGERANT SUCTION
RTU	ROOFTOP AIR HANDLING UNIT
SA	SUPPLY AIR
SMACNA	SHEET METAL AND AIR CONDITIONING CONTRACTORS' NATIONAL ASSOCIATION
SPECS	SPECIFICATIONS
TB	TERMINAL BOX
TYP	TYPICAL
UTF	UP THRU FLOOR
UTR	UP THRU ROOF
VAV	VARIABLE AIR VOLUME
VFD	VARIABLE FREQUENCY DRIVE

MECHANICAL DRAWING LIST

SHEET NUMBER	SHEET NAME
M0.1	MECHANICAL GENERAL INFORMATION
M1.1	BASEMENT MECHANICAL DEMOLITION PLAN
M1.2	FIRST FLOOR MECHANICAL DEMOLITION PLAN
M1.3	SECOND FLOOR MECHANICAL DEMOLITION PLAN
M1.4	THIRD FLOOR MECHANICAL DEMOLITION PLAN
M2.1	BASEMENT DUCTWORK PLAN
M2.2	FIRST FLOOR DUCTWORK PLAN
M2.3	SECOND FLOOR DUCTWORK PLAN
M2.4	THIRD FLOOR DUCTWORK PLAN
M3.1	BASEMENT MECHANICAL PIPING PLAN
M3.2	FIRST FLOOR MECHANICAL PIPING PLAN
M3.3	SECOND FLOOR MECHANIC PIPING PLAN
M3.4	THIRD FLOOR MECHANICAL PIPING PLAN
M4.1	MECHANICAL SCHEDULES AND DETAILS
M4.2	MECHANICAL SCHEDULES AND DETAILS
M4.3	MECHANICAL SCHEDULES AND DETAILS
M4.4	MECHANICAL SCHEDULES AND DETAILS
M5.1	HEATING WATER DIAGRAMS
M5.2	DUCTWORK DIAGRAMS

GENERAL DRAWING NOTES:

1. MATERIALS ILLUSTRATED WITH LIGHT LINES ARE EXISTING TO REMAIN UNLESS NOTED OTHERWISE.
2. EXISTING CONDITIONS SHOWN ARE BASED ON REVIEW OF REFERENCE DRAWINGS AND GENERAL FIELD REVIEW. NOTIFY ENGINEER IF FIELD CONDITIONS DIFFER FROM WHAT IS SHOWN. CONTRACTOR IS RESPONSIBLE FOR FIELD MEASURING AND COORDINATING DIMENSIONS FOR TIE-IN AND INSTALLATION OF ALL NEW EQUIPMENT, DUCTWORK, PIPING AND OTHER MATERIALS PRIOR TO FABRICATION.
3. MATERIALS ILLUSTRATED WITH DARK DASHED LINES SHALL BE REMOVED. THE OWNER SHALL HAVE THE RIGHT TO RETAIN ANY MATERIALS ILLUSTRATED TO BE REMOVED. IF REQUESTED BY THE OWNER, THE CONTRACTOR SHALL REMOVE MATERIALS AND RELOCATE THEM TO THE OWNER'S SPECIFIED LOCATION OF STORAGE. ALL MATERIALS NOTED TO BE RELOCATED SHALL BE TEMPORARILY STORED AND PROTECTED DURING CONSTRUCTION BY THE CONTRACTOR UNLESS NOTED OTHERWISE. REMOVE ALL MATERIALS ASSOCIATED WITH EQUIPMENT AND DUCTWORK, INCLUDING PIPING, HANGERS, SUPPORTS, POWER, CONTROLS, INSULATION, ETC.
4. MATERIALS ILLUSTRATED WITH DARK LINES ARE NEW.
5. DO NOT INSTALL ANY MATERIALS IN A LOCATION THAT HINDERS MAINTENANCE ACCESS TO ANY MATERIAL THAT REQUIRES SERVICE OR MAINTENANCE.
6. THIS CONTRACTOR SHALL REMOVE AND RE-INSTALL EXISTING CEILING SYSTEMS WHERE NECESSARY TO ACCOMMODATE ABOVE CEILING WORK. PRIOR TO REMOVAL OF CEILINGS, CONTRACTOR SHALL PHOTOGRAPH CONDITION OF EXISTING CEILINGS AND SUBMIT PHOTO DOCUMENTATION TO OWNER AND ENGINEER. CEILING REMOVAL AND REINSTALLATION WORK SHALL BE CAREFULLY PERFORMED WITH CLEAN GLOVES TO MAINTAIN CEILING APPEARANCE. CONTRACTOR SHALL REPLACE ALL DAMAGED AND/OR DIRTY CEILING TILES TO MATCH EXISTING.
7. PATCH AND PAINT WALLS, CEILINGS AND FLOORS TO MATCH EXISTING AS REQUIRED TO ACCOMMODATE WORK.
8. DUCT RUNOUT SIZES TO TERMINAL EQUIPMENT (VAV BOXES, DIFFUSERS, GRILLES, ETC.) SHALL MATCH THE EQUIPMENT CONNECTION SIZE UNLESS NOTED OTHERWISE.
9. PIPING RUNOUTS TO TERMINAL EQUIPMENT (RE-HEAT COILS, FINNED TUBE RADIATION, UNIT HEATERS, CABINET UNIT HEATERS, ETC.) SHALL BE ¾" UNLESS NOTED OTHERWISE.
10. AREAS OF THIS BUILDING UTILIZE A RETURN AIR PLENUM. ALL MATERIALS SHALL HAVE A MAXIMUM 25 FLAME SPREAD AND 50 SMOKE-DEVELOPED INDEX AS TESTED IN ACCORDANCE WITH ASTME 84 OR UL 723. WIRING SHALL BE PLENUM RATED PER NFPA 70.
11. DUCT SIZES NOTED REPRESENT THE ACTUAL SHEET METAL SIZE. WHERE INTERIOR DUCT LINING IS USED, DUCT SIZES HAVE ALREADY ACCOUNTED FOR THE LINING.
12. DOUBLE WALL DUCTWORK SIZES SHOWN ARE INSIDE DUCT DIMENSIONS.
13. REMOVE DUCTWORK AND PIPING BACK TO CAPPED LOCATIONS WHERE INDICATED. INSULATE CAPPED DUCTS AND PIPES THE SAME AS NEW.
14. SHUT-OFF VALVES SHALL BE INSTALLED IN ACCESSIBLE LOCATIONS. COORDINATE THE LOCATION OF ACCESS DOORS IN CEILINGS OR WALLS WITH THE GENERAL CONTRACTOR IF A VALVE IS REQUIRED TO BE LOCATED ABOVE AN INACCESSIBLE CEILING OR IN A WALL OR CHASE.
15. PROVIDE ESCUTCHEONS FOR ALL PIPING PENETRATIONS OF CEILINGS IN OCCUPIED AREAS.
16. FIRESTOP ALL PENETRATIONS OF RATED CEILINGS WITH APPROPRIATE FIRESTOPPING MATERIAL. REQUIRED MATERIAL ARE INDICATION IN THE SPECIFICATIONS.
17. UNLESS DETAILED OTHERWISE, SYSTEMS SHALL BE ORGANIZED SUCH THAT DUCTWORK MAINS ARE THE HIGHEST LEVEL AND ARE TIGHT TO BUILDING STRUCTURE. HVAC PIPING AND PLUMBING PIPING SHALL BE ROUTED BELOW THE DUCTWORK MAINS, AND FIRE PROTECTION PIPING SHALL BE BELOW ALL.

EQUIPMENT ALTERNATES

THE EXISTING MECHANICAL SYSTEMS AND EQUIPMENT WERE INSTALLED IN 2000 DURING THE ORIGINAL RENOVATIONS OF THE FACILITY. CONSTRUCTION WAS HALTED WITHOUT THE SYSTEMS BEING FULLY COMPLETED OR EQUIPMENT STARTUP. THE AWARDED CONTRACTOR SHALL REVIEW AND TEST ALL EXISTING EQUIPMENT IN THE FIRST PHASE OF CONSTRUCTION.
ANY EQUIPMENT TESTED AS DEFICIENT OR NON-OPERATIONAL SHALL BE REPAIRED OR REPLACED UNDER APPROVED CONSTRUCTION CHANGE ORDERS UNLESS COVERED IN THE ORIGINAL DESIGN OR ACCEPTED ALTERNATES

UNDER THE BASE BID WE ARE ASSUMING THE REUSE OF THE EXISTING EQUIPMENT AND ASSOCIATED SYSTEMS. THE ALTERNATES BELOW OUTLINE THE MAIN EQUIPMENT THAT MAY NEED REPLACEMENT UNDER THE PROJECT THAT WE WANT INCLUDED IN PRICING.

ALTERNATE #1
- PROVIDE NEW RTU TO REPLACE THE EXISTING CARRIER ROOFTOP UNIT EX-RTU-1 SERVING THE FRONT OFFICE SUPPLY AND RETURN AIR SYSTEMS. PROVIDE NEW ROOF CURB OR CURB ADAPTER FOR UNIT INSTALLATION AND REWORK EXISTING SUPPLY AND RETURN AIR DUCTWORK AS NECESSARY TO TIE-IN TO THE EXISTING SYSTEMS WITHIN THE BUILDING.

ALTERNATE #2
- PROVIDE NEW LIKE-FOR-LIKE NON-CONDENSING BOILER TO REPLACE THE EXISTING BRYAN BOILER EX-B-1. INSTALL UNIT ON EXISTING EQUIPMENT PAD AND RECONNECT TO EXISTING HEATING WATER PIPING, NATURAL GAS MAINS, AND FLUE DUCTWORK.

ALTERNATE #3
- PROVIDE NEW GAS FIRED DOMESTIC WATER HEATER TO REPLACE THE EXISTING A.O. SMITH WATER HEATER EX-DWH-1. RECONNECT TO EXISTING NATURAL GAS, EXHAUST FLUE, AND DOMESTIC WATER PIPING.

Sol Harris/Day architecture
Designed for People. Designed for Life.
6677 Frank Avenue NW, North Canton, OH 44720 | 330.493.3722 | www.solharrisday.com

STATE OF OHIO
ERIC L WRIGHT
78568
REGISTERED PROFESSIONAL ENGINEER

not published, all rights reserved

Renovation for:
Coshocton Port Authority - Coshocton Collaborative
538 Main St
Coshocton, OH, 43812

MARK	DATE	DESCRIPTION
1	12/01/2023	ADDENDUM NO 1

PROJECT NO: 19.137
DATE: 11/10/2023

MECHANICAL GENERAL INFORMATION

M0.1

MECHANICAL NOTES

1. EXISTING CONDITIONS SHOWN ARE BASED ON REVIEW OF REFERENCE DRAWINGS AND GENERAL FIELD REVIEW. REFER THE ATTACHED REFERENCE DOCUMENTS FOR THE ORIGINAL 2000 REFERENCE DESIGN DOCUMENTS. ANY EXISTING CONDITIONS THAT WERE DOCUMENTED AS ALTERED FROM THE ORIGINAL DESIGN ARE INCLUDED IN THE DESIGN DOCUMENTS OTHERWISE THE ASSUMPTION IS THAT THE EXISTING SYSTEM DESIGN PERFORMANCE IS THAT AS SHOWN ON THE 2000 REFERENCE DOCUMENTS.
2. ALL EQUIPMENT AND SYSTEMS NOTED AS EXISTING TO REMAIN SHALL BE REVIEWED PRIOR TO REWORK. IF ANY LARGE DEFICIENCIES NOTED THE CONTRACTOR SHALL INFORM THE PROJECT MANAGER AND ENGINEER.
3. EXISTING DUCTWORK UPSTREAM OF TERMINAL BOXES IS INTERNALLY LINED. EXISTING BRANCHES OFF TERMINAL BOX MAINS UTILIZE EXTERNAL INSULATION. CONTRACTOR SHALL PROVIDE DUCT CLEANING OF ALL EXISTING SYSTEMS.
4. EXISTING VAV UNITS AND ASSOCIATED HEATING WATER PIPING AND DUCTWORK MAINS INSTALLED THROUGHOUT. EXTENSIONS TO GRILLES AND DIFFUSERS ARE NOT INSTALLED.
5. VAV TERMINAL BOXES AND ASSOCIATED CONTROL VALVES HAVE ACTUATORS INSTALLED BUT NOT WIRED AS CONTROL SYSTEM WAS NOT COMPLETED. ASSUME ALL VAV CONTROL ACTUATORS (DAMPER AND VALVE) WILL REQUIRE REPLACEMENT.

2 M1.1 **EXISTING AHU-2**

4 M1.1 **HEATING WATER PUMPS**

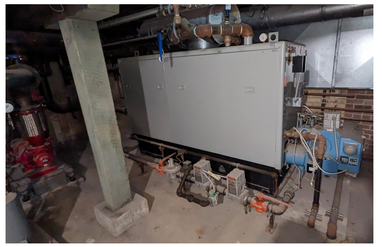

5 M1.1 **BOILER**
12" = 1'-0"

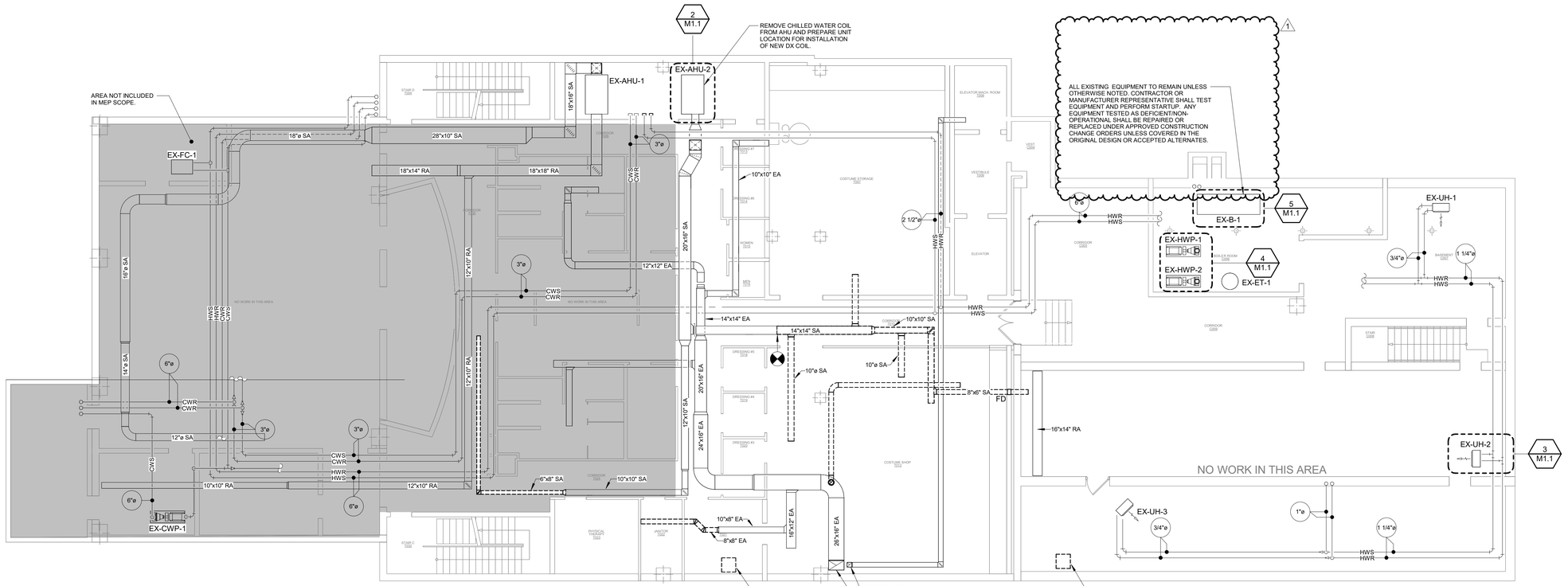

1 M1.1 **BASEMENT MECHANICAL DEMOLITION PLAN**
1/8" = 1'-0"

3 M1.1 **UNIT HEATER**

Sol Harris/Day architecture
Designed for People. Designed for Life.
6677 Frank Avenue NW, North Canton, OH 44720 | 330.493.3722 | www.solharrisday.com

STATE OF OHIO
ERIC L WRIGHT 78568
REGISTERED PROFESSIONAL ENGINEER

not published, all rights reserved

Renovation for:
Coshocton Port Authority - Coshocton Collaborative
538 Main St
Coshocton, OH, 43812

MARK	DATE	DESCRIPTION
1	12/01/2023	ADDENDUM NO 1

PROJECT NO: 19.137
DATE: 11/10/2023

BASEMENT MECHANICAL DEMOLITION PLAN

M1.1

MECHANICAL NOTES

1. EXISTING CONDITIONS SHOWN ARE BASED ON REVIEW OF REFERENCE DRAWINGS AND GENERAL FIELD REVIEW. REFER THE ATTACHED REFERENCE DOCUMENTS FOR THE ORIGINAL 2000 REFERENCE DESIGN DOCUMENTS. ANY EXISTING CONDITIONS THAT WERE DOCUMENTED AS ALTERED FROM THE ORIGINAL DESIGN ARE INCLUDED IN THE DESIGN DOCUMENTS OTHERWISE THE ASSUMPTION IS THAT THE EXISTING SYSTEM DESIGN PERFORMANCE IS THAT AS SHOWN ON THE 2000 REFERENCE DOCUMENTS.
2. ALL EQUIPMENT AND SYSTEMS NOTED AS EXISTING TO REMAIN SHALL BE REVIEWED PRIOR TO REWORK. IF ANY LARGE DEFICIENCIES NOTED THE CONTRACTOR SHALL INFORM THE PROJECT MANAGER AND ENGINEER.
3. EXISTING DUCTWORK UPSTREAM OF TERMINAL BOXES IS INTERNALLY LINED. EXISTING BRANCHES OFF TERMINAL BOX MAINS UTILIZE EXTERNAL INSULATION. CONTRACTOR SHALL PROVIDE DUCT CLEANING OF ALL EXISTING SYSTEMS.
4. EXISTING VAV UNITS AND ASSOCIATED HEATING WATER PIPING AND DUCTWORK MAINS INSTALLED THROUGHOUT. EXTENSIONS TO GRILLES AND DIFFUSERS ARE NOT INSTALLED.
5. VAV TERMINAL BOXES AND ASSOCIATED CONTROL VALVES HAVE ACTUATORS INSTALLED BUT NOT WIRED AS CONTROL SYSTEM WAS NOT COMPLETED. ASSUME ALL VAV CONTROL ACTUATORS (DAMPER AND VALVE) WILL REQUIRE REPLACEMENT.

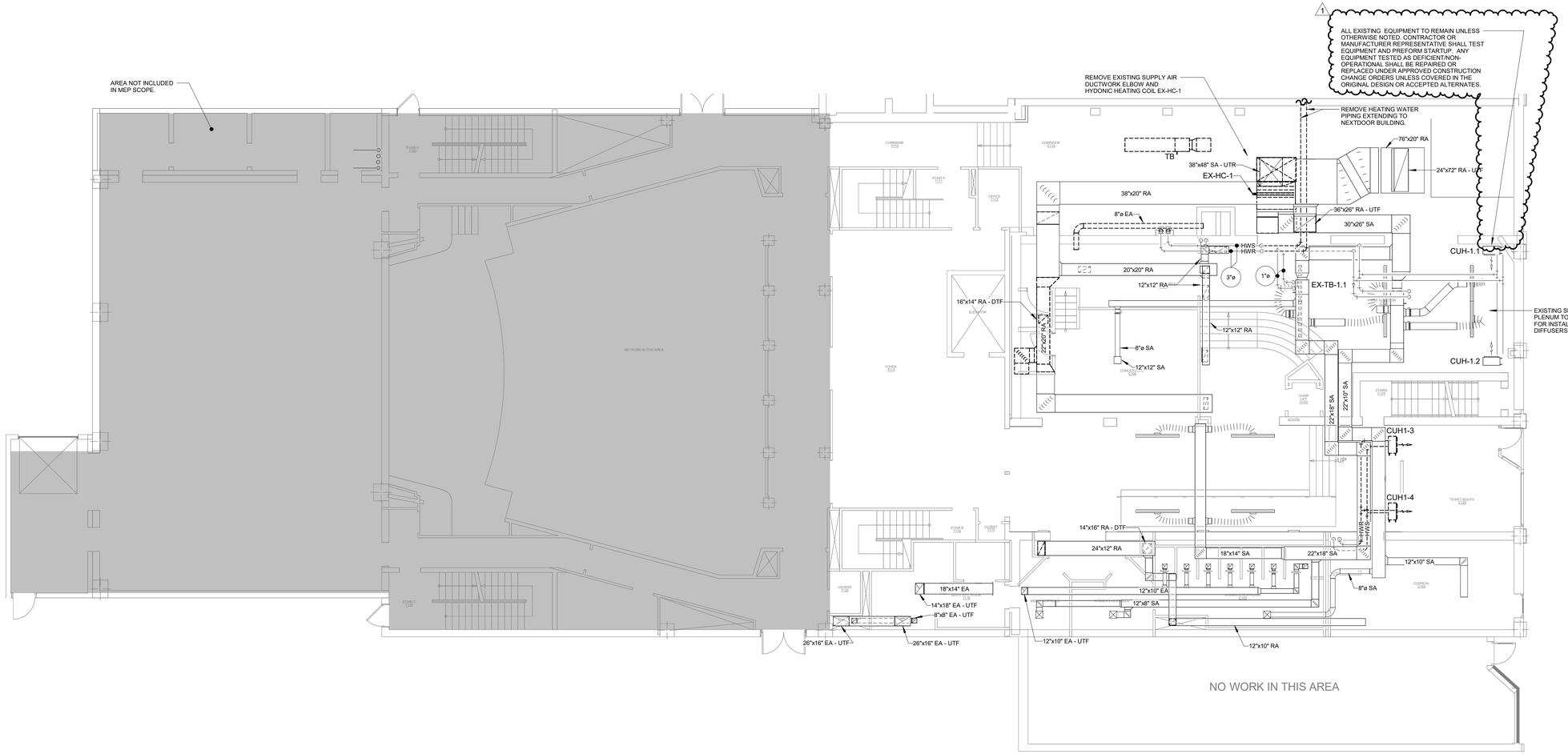

1 FIRST FLOOR MECHANICAL DEMOLITION PLAN
M1.2 **1/8" = 1'-0"**

SOL Harris/Day architecture
Designed for People. Designed for Life.
6677 Frank Avenue NW, North Canton, OH 44720 | 330.493.3722 | www.solharrisday.com

STATE OF OHIO
ERIC L WRIGHT
78568
REGISTERED PROFESSIONAL ENGINEER

not published; all rights reserved

Renovation for:
Coshocton Port Authority - Coshocton Collaborative
538 Main St
Coshocton, OH, 43812

MARK	DATE	DESCRIPTION
1	12/01/2023	ADDENDUM NO 1

PROJECT NO: 19.137
DATE: 11/10/2023

FIRST FLOOR MECHANICAL DEMOLITION PLAN

M1.2

MECHANICAL NOTES

1. EXISTING CONDITIONS SHOWN ARE BASED ON REVIEW OF REFERENCE DRAWINGS AND GENERAL FIELD REVIEW. REFER THE ATTACHED REFERENCE DOCUMENTS FOR THE ORIGINAL 2000 REFERENCE DESIGN DOCUMENTS. ANY EXISTING CONDITIONS THAT WERE DOCUMENTED AS ALTERED FROM THE ORIGINAL DESIGN ARE INCLUDED IN THE DESIGN DOCUMENTS OTHERWISE THE ASSUMPTION IS THAT THE EXISTING SYSTEM DESIGN PERFORMANCE IS THAT AS SHOWN ON THE 2000 REFERENCE DOCUMENTS.
2. ALL EQUIPMENT AND SYSTEMS NOTED AS EXISTING TO REMAIN SHALL BE REVIEWED PRIOR TO REWORK. IF ANY LARGE DEFICIENCIES NOTED THE CONTRACTOR SHALL INFORM THE PROJECT MANAGER AND ENGINEER.
3. EXISTING DUCTWORK UPSTREAM OF TERMINAL BOXES IS INTERNALLY LINED. EXISTING BRANCHES OFF TERMINAL BOX MAINS UTILIZE EXTERNAL INSULATION. CONTRACTOR SHALL PROVIDE DUCT CLEANING OF ALL EXISTING SYSTEMS.
4. EXISTING VAV UNITS AND ASSOCIATED HEATING WATER PIPING AND DUCTWORK MAINS INSTALLED THROUGHOUT. EXTENSIONS TO GRILLES AND DIFFUSERS ARE NOT INSTALLED.
5. VAV TERMINAL BOXES AND ASSOCIATED CONTROL VALVES HAVE ACTUATORS INSTALLED BUT NOT WIRED AS CONTROL SYSTEM WAS NOT COMPLETED. ASSUME ALL VAV CONTROL ACTUATORS (DAMPER AND VALVE) WILL REQUIRE REPLACEMENT.

2 M1.3 **ROOF TOP UNIT**

1 ALL EXISTING EQUIPMENT TO REMAIN UNLESS OTHERWISE NOTED. CONTRACTOR OR MANUFACTURER REPRESENTATIVE SHALL TEST EQUIPMENT AND PREFORM STARTUP. ANY EQUIPMENT TESTED AS DEFICIENT/NON-OPERATIONAL SHALL BE REPAIRED OR REPLACED UNDER APPROVED CONSTRUCTION CHANGE ORDERS UNLESS COVERED IN THE ORIGINAL DESIGN OR ACCEPTED ALTERNATES.

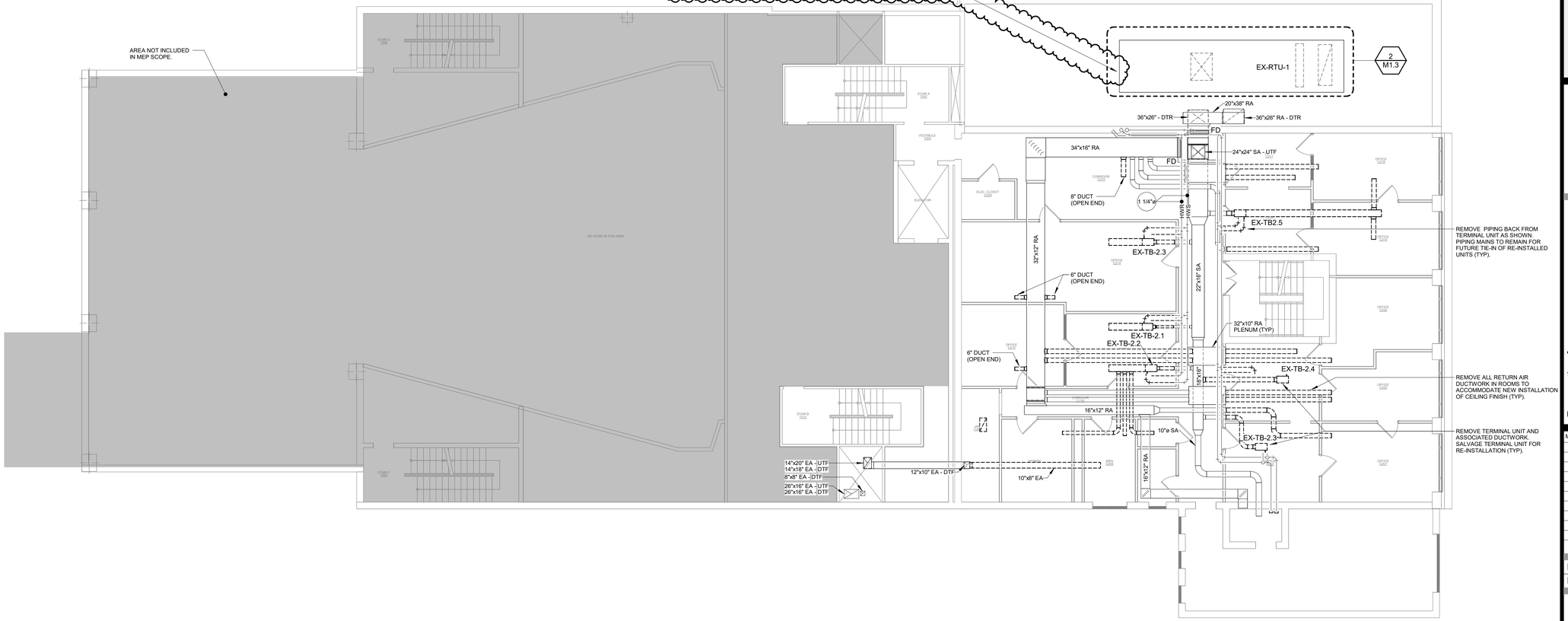

1 M1.3 **SECOND FLOOR MECHANICAL DEMOLITION PLAN**
1/8" = 1'-0"

Sol Harris/Day architecture
Designed for People. Designed for Life.
6677 Frank Avenue NW, North Canton, OH 44720 | 330.493.3722 | www.solharrisday.com

STATE OF OHIO
ERIC L WRIGHT
78568
REGISTERED PROFESSIONAL ENGINEER

not published; all rights reserved

Renovation for:
Coshocton Port Authority - Coshocton Collaborative
538 Main St
Coshocton, OH, 43812

MARK	DATE	DESCRIPTION
1	12/01/2023	ADDENDUM NO 1

PROJECT NO: 19.137
DATE: 11/10/2023

SECOND FLOOR MECHANICAL DEMOLITION PLAN

M1.3

MECHANICAL NOTES

1. EXISTING CONDITIONS SHOWN ARE BASED ON REVIEW OF REFERENCE DRAWINGS AND GENERAL FIELD REVIEW. REFER THE ATTACHED REFERENCE DOCUMENTS FOR THE ORIGINAL 2000 REFERENCE DESIGN DOCUMENTS. ANY EXISTING CONDITIONS THAT WERE DOCUMENTED AS ALTERED FROM THE ORIGINAL DESIGN ARE INCLUDED IN THE DESIGN DOCUMENTS OTHERWISE THE ASSUMPTION IS THAT THE EXISTING SYSTEM DESIGN PERFORMANCE IS THAT AS SHOWN ON THE 2000 REFERENCE DOCUMENTS.
2. ALL EQUIPMENT AND SYSTEMS NOTED AS EXISTING TO REMAIN SHALL BE REVIEWED PRIOR TO REWORK. IF ANY LARGE DEFICIENCIES NOTED THE CONTRACTOR SHALL INFORM THE PROJECT MANAGER AND ENGINEER.
3. EXISTING DUCTWORK UPSTREAM OF TERMINAL BOXES IS INTERNALLY LINED. EXISTING BRANCHES OFF TERMINAL BOX MAINS UTILIZE EXTERNAL INSULATION. CONTRACTOR SHALL PROVIDE DUCT CLEANING OF ALL EXISTING SYSTEMS.
4. EXISTING VAV UNITS AND ASSOCIATED HEATING WATER PIPING AND DUCTWORK MAINS INSTALLED THROUGHOUT. EXTENSIONS TO GRILLES AND DIFFUSERS ARE NOT INSTALLED.
5. VAV TERMINAL BOXES AND ASSOCIATED CONTROL VALVES HAVE ACTUATORS INSTALLED BUT NOT WIRED AS CONTROL SYSTEM WAS NOT COMPLETED. ASSUME ALL VAV CONTROL ACTUATORS (DAMPER AND VALVE) WILL REQUIRE REPLACEMENT.

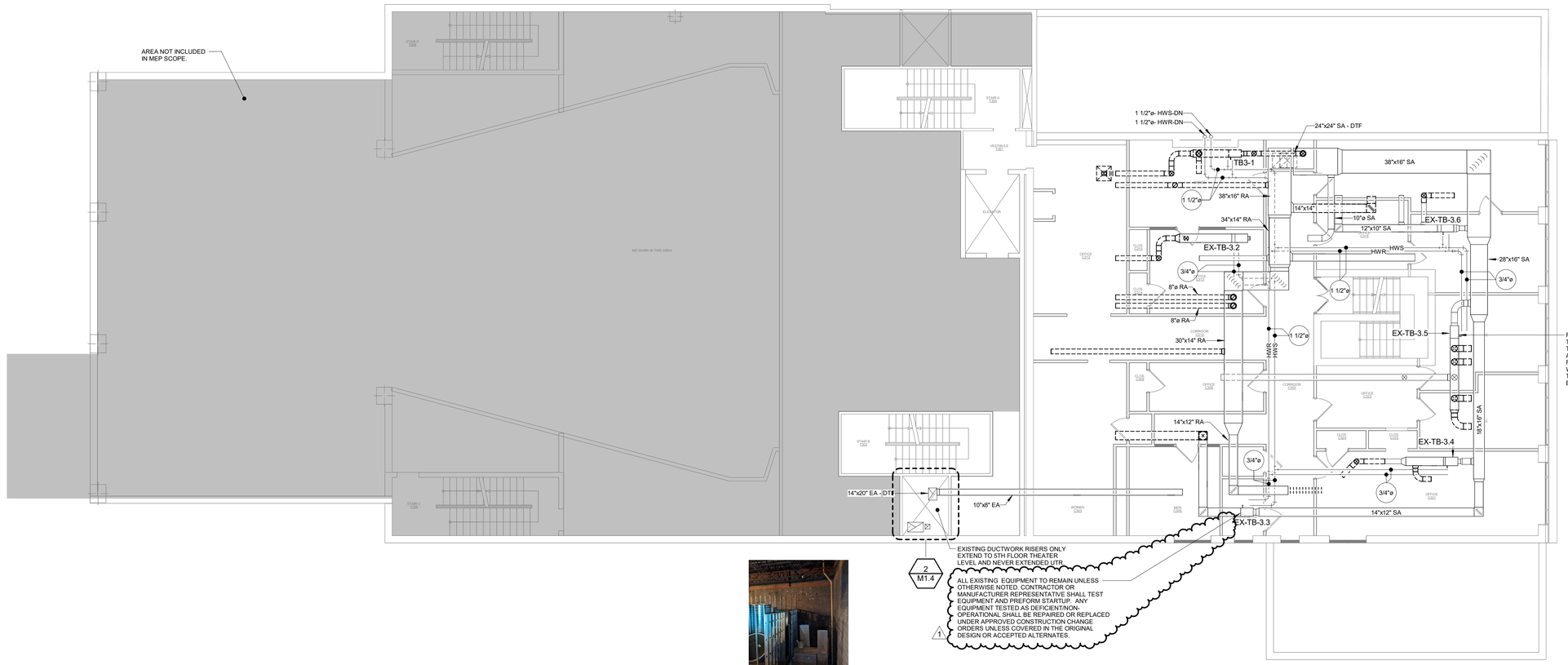

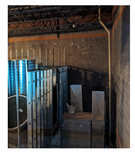

2 M1.4 **DUCT RISER**

1 M1.4 **THIRD FLOOR MECHANICAL DEMOLITION PLAN**
1/8" = 1'-0"

SōL Harris/Day architecture
Designed for People. Designed for Life.
6677 Frank Avenue NW, North Canton, OH 44720 | 330.493.3722 | www.solharrisday.com

STATE OF OHIO
ERIC L WRIGHT
78568
REGISTERED PROFESSIONAL ENGINEER

not published, all rights reserved

Renovation for:
Coshocton Port Authority - Coshocton Collaborative
538 Main St
Coshocton, OH, 43812

MARK	DATE	DESCRIPTION
1	12/01/2023	ADDENDUM NO 1

PROJECT NO: 19.137
DATE: 11/10/2023

THIRD FLOOR MECHANICAL DEMOLITION PLAN

M1.4

MECHANICAL NOTES

1. EXISTING CONDITIONS SHOWN ARE BASED ON REVIEW OF REFERENCE DRAWINGS AND GENERAL FIELD REVIEW. REFER THE ATTACHED REFERENCE DOCUMENTS FOR THE ORIGINAL 2000 REFERENCE DESIGN DOCUMENTS. ANY EXISTING CONDITIONS THAT WERE DOCUMENTED AS ALTERED FROM THE ORIGINAL DESIGN ARE INCLUDED IN THE DESIGN DOCUMENTS OTHERWISE THE ASSUMPTION IS THAT THE EXISTING SYSTEM DESIGN PERFORMANCE IS THAT AS SHOWN ON THE 2000 REFERENCE DOCUMENTS.
2. ALL EQUIPMENT AND SYSTEMS NOTED AS EXISTING TO REMAIN SHALL BE REVIEWED PRIOR TO REWORK. IF ANY LARGE DEFICIENCIES NOTED THE CONTRACTOR SHALL INFORM THE PROJECT MANAGER AND ENGINEER.
3. EXISTING DUCTWORK UPSTREAM OF TERMINAL BOXES IS INTERNALLY LINED. EXISTING BRANCHES OFF TERMINAL BOX MAINS UTILIZE EXTERNAL INSULATION. CONTRACTOR SHALL PROVIDE DUCT CLEANING OF ALL EXISTING SYSTEMS.
4. EXISTING VAV UNITS AND ASSOCIATED HEATING WATER PIPING AND DUCTWORK MAINS INSTALLED THROUGHOUT. EXTENSIONS TO GRILLES AND DIFFUSERS ARE NOT INSTALLED.
5. VAV TERMINAL BOXES AND ASSOCIATED CONTROL VALVES HAVE ACTUATORS INSTALLED BUT NOT WIRED AS CONTROL SYSTEM WAS NOT COMPLETED. ASSUME ALL VAV CONTROL ACTUATORS (DAMPER AND VALVE) WILL REQUIRE REPLACEMENT.
6. ALL DUCTWORK TO BE INSTALLED EXPOSED IN AREAS SHALL BE NON-INSULATED SPIRAL ROUND DUCTWORK PREPARED FOR FIELD PAINTING (UNLESS OTHERWISE NOTED).

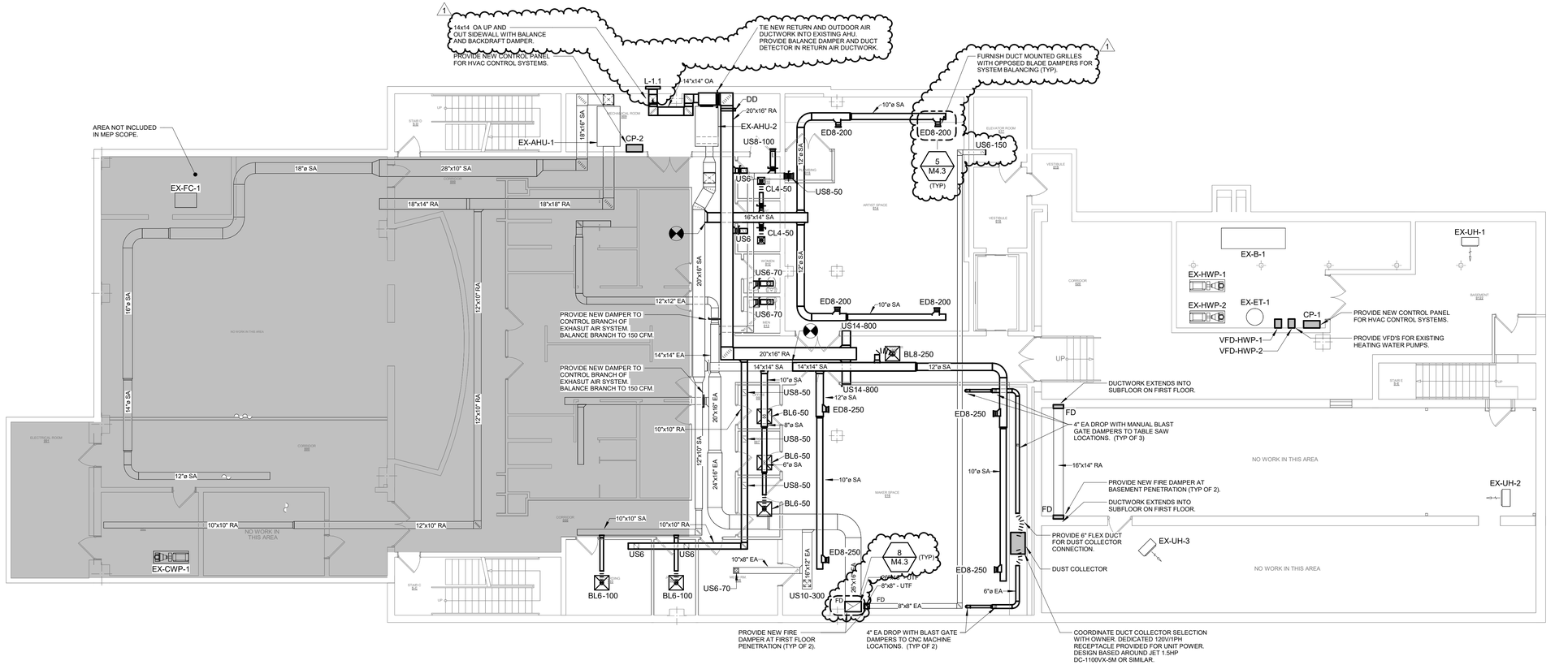

1 M2.1 **BASEMENT DUCTWORK PLAN**
1/8" = 1'-0"

SOL Harris/Day architecture
Designed for People. Designed for Life.
6677 Frank Avenue NW, North Canton, OH 44720 | 330.493.3722 | www.solharrisday.com

STATE OF OHIO
ERIC L WRIGHT 78568
REGISTERED PROFESSIONAL ENGINEER

not published, all rights reserved

Renovation for:
Coshocton Port Authority - Coshocton Collaborative
538 Main St
Coshocton, OH, 43812

MARK	DATE	DESCRIPTION
1	12/01/2023	ADDENDUM NO 1

PROJECT NO: 19.137
DATE: 11/10/2023

BASEMENT DUCTWORK PLAN

M2.1

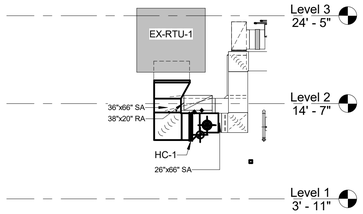

2 M2.2 **HEATING COIL ELEVATION**
1/8" = 1'-0"

MECHANICAL NOTES

1. EXISTING CONDITIONS SHOWN ARE BASED ON REVIEW OF REFERENCE DRAWINGS AND GENERAL FIELD REVIEW. REFER THE ATTACHED REFERENCE DOCUMENTS FOR THE ORIGINAL 2000 REFERENCE DESIGN DOCUMENTS. ANY EXISTING CONDITIONS THAT WERE DOCUMENTED AS ALTERED FROM THE ORIGINAL DESIGN ARE INCLUDED IN THE DESIGN DOCUMENTS OTHERWISE THE ASSUMPTION IS THAT THE EXISTING SYSTEM DESIGN PERFORMANCE IS THAT AS SHOWN ON THE 2000 REFERENCE DOCUMENTS.
2. ALL EQUIPMENT AND SYSTEMS NOTED AS EXISTING TO REMAIN SHALL BE REVIEWED PRIOR TO REWORK. IF ANY LARGE DEFICIENCIES NOTED THE CONTRACTOR SHALL INFORM THE PROJECT MANAGER AND ENGINEER.
3. EXISTING DUCTWORK UPSTREAM OF TERMINAL BOXES IS INTERNALLY LINED. EXISTING BRANCHES OFF TERMINAL BOX MAINS UTILIZE EXTERNAL INSULATION. CONTRACTOR SHALL PROVIDE DUCT CLEANING OF ALL EXISTING SYSTEMS.
4. EXISTING VAV UNITS AND ASSOCIATED HEATING WATER PIPING AND DUCTWORK MAINS INSTALLED THROUGHOUT. EXTENSIONS TO GRILLES AND DIFFUSERS ARE NOT INSTALLED.
5. VAV TERMINAL BOXES AND ASSOCIATED CONTROL VALVES HAVE ACTUATORS INSTALLED BUT NOT WIRED AS CONTROL SYSTEM WAS NOT COMPLETED. ASSUME ALL VAV CONTROL ACTUATORS (DAMPER AND VALVE) WILL REQUIRE REPLACEMENT.
6. ALL DUCTWORK TO BE INSTALLED EXPOSED IN AREAS SHALL BE NON-INSULATED SPIRAL ROUND DUCTWORK PREPARED FOR FIELD PAINTING (UNLESS OTHERWISE NOTED).

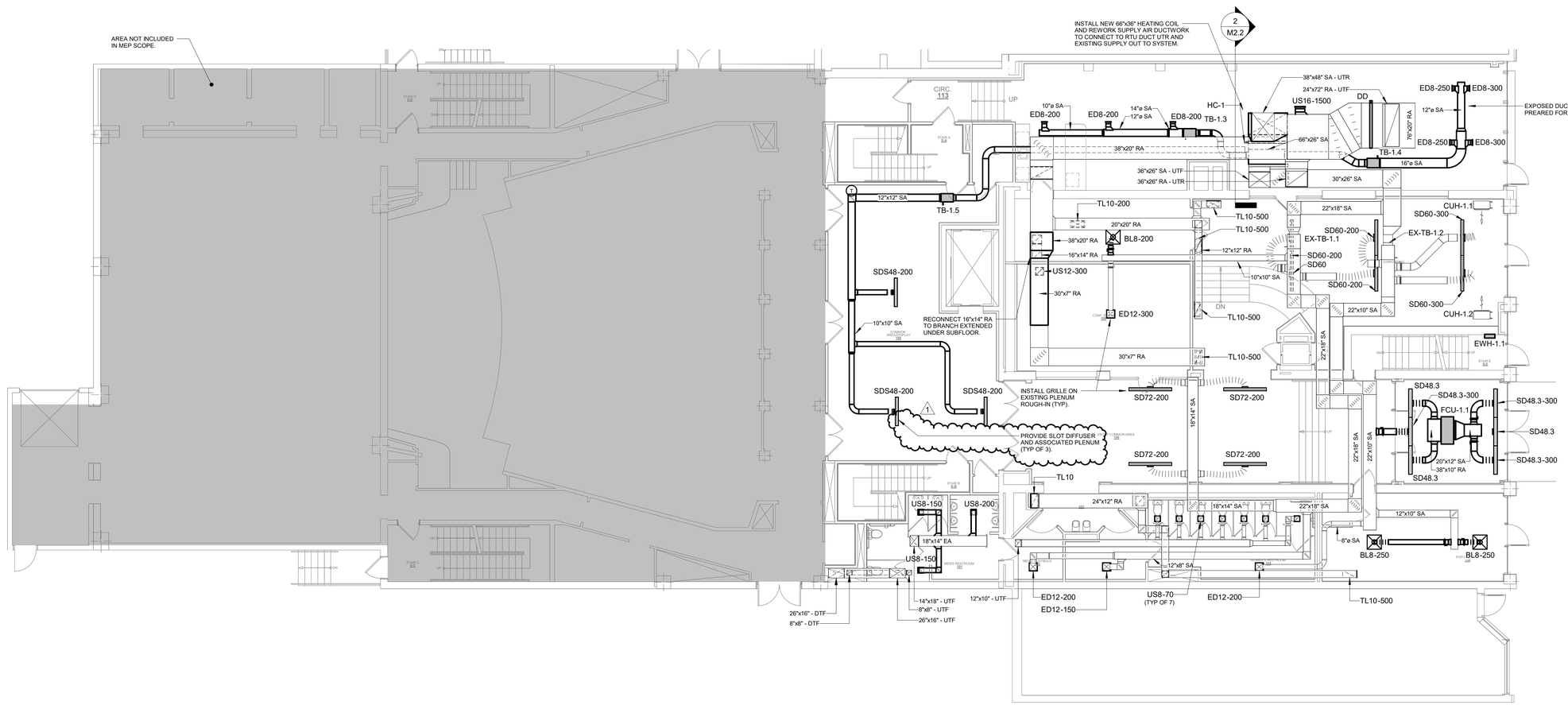

1 FIRST FLOOR DUCTWORK PLAN
1/8" = 1'-0"

SOL Harris/Day architecture
Designed for People. Designed for Life.
6677 Frank Avenue NW, North Canton, OH 44720 | 330.493.3722 | www.solharrisday.com

STATE OF OHIO
ERIC L. WRIGHT
78568
REGISTERED PROFESSIONAL ENGINEER

not published, all rights reserved

Renovation for:
Coshocton Port Authority - Coshocton Collaborative
538 Main St
Coshocton, OH, 43812

MARK	DATE	DESCRIPTION
1	12/01/2023	ADDENDUM NO 1

PROJECT NO: 19.137
DATE: 11/10/2023

FIRST FLOOR DUCTWORK PLAN

M2.2

MECHANICAL NOTES

1. EXISTING CONDITIONS SHOWN ARE BASED ON REVIEW OF REFERENCE DRAWINGS AND GENERAL FIELD REVIEW. REFER THE ATTACHED REFERENCE DOCUMENTS FOR THE ORIGINAL 2000 REFERENCE DESIGN DOCUMENTS. ANY EXISTING CONDITIONS THAT WERE DOCUMENTED AS ALTERED FROM THE ORIGINAL DESIGN ARE INCLUDED IN THE DESIGN DOCUMENTS OTHERWISE THE ASSUMPTION IS THAT THE EXISTING SYSTEM DESIGN PERFORMANCE IS THAT AS SHOWN ON THE 2000 REFERENCE DOCUMENTS.
2. ALL EQUIPMENT AND SYSTEMS NOTED AS EXISTING TO REMAIN SHALL BE REVIEWED PRIOR TO REWORK. IF ANY LARGE DEFICIENCIES NOTED THE CONTRACTOR SHALL INFORM THE PROJECT MANAGER AND ENGINEER.
3. EXISTING DUCTWORK UPSTREAM OF TERMINAL BOXES IS INTERNALLY LINED. EXISTING BRANCHES OFF TERMINAL BOX MAINS UTILIZE EXTERNAL INSULATION. CONTRACTOR SHALL PROVIDE DUCT CLEANING OF ALL EXISTING SYSTEMS.
4. EXISTING VAV UNITS AND ASSOCIATED HEATING WATER PIPING AND DUCTWORK MAINS INSTALLED THROUGHOUT. EXTENSIONS TO GRILLES AND DIFFUSERS ARE NOT INSTALLED.
5. VAV TERMINAL BOXES AND ASSOCIATED CONTROL VALVES HAVE ACTUATORS INSTALLED BUT NOT WIRED AS CONTROL SYSTEM WAS NOT COMPLETED. ASSUME ALL VAV CONTROL ACTUATORS (DAMPER AND VALVE) WILL REQUIRE REPLACEMENT.
6. ALL DUCTWORK TO BE INSTALLED EXPOSED IN AREAS SHALL BE NON-INSULATED SPIRAL ROUND DUCTWORK PREPARED FOR FIELD PAINTING (UNLESS OTHERWISE NOTED).
7. ALL HVAC SYSTEMS (DUCTWORK, PIPING, TERMINAL UNITS) ARE ACCEPTABLE INSTALLED EXPOSED WITHIN THE SPACE ON THE SECOND FLOOR. EQUIPMENT AND PIPING SHALL BE LOCATED HIGH IN THE SPACE AND COORDINATED WITH THE NEW DRYWALL CEILING BEING INSTALLED.

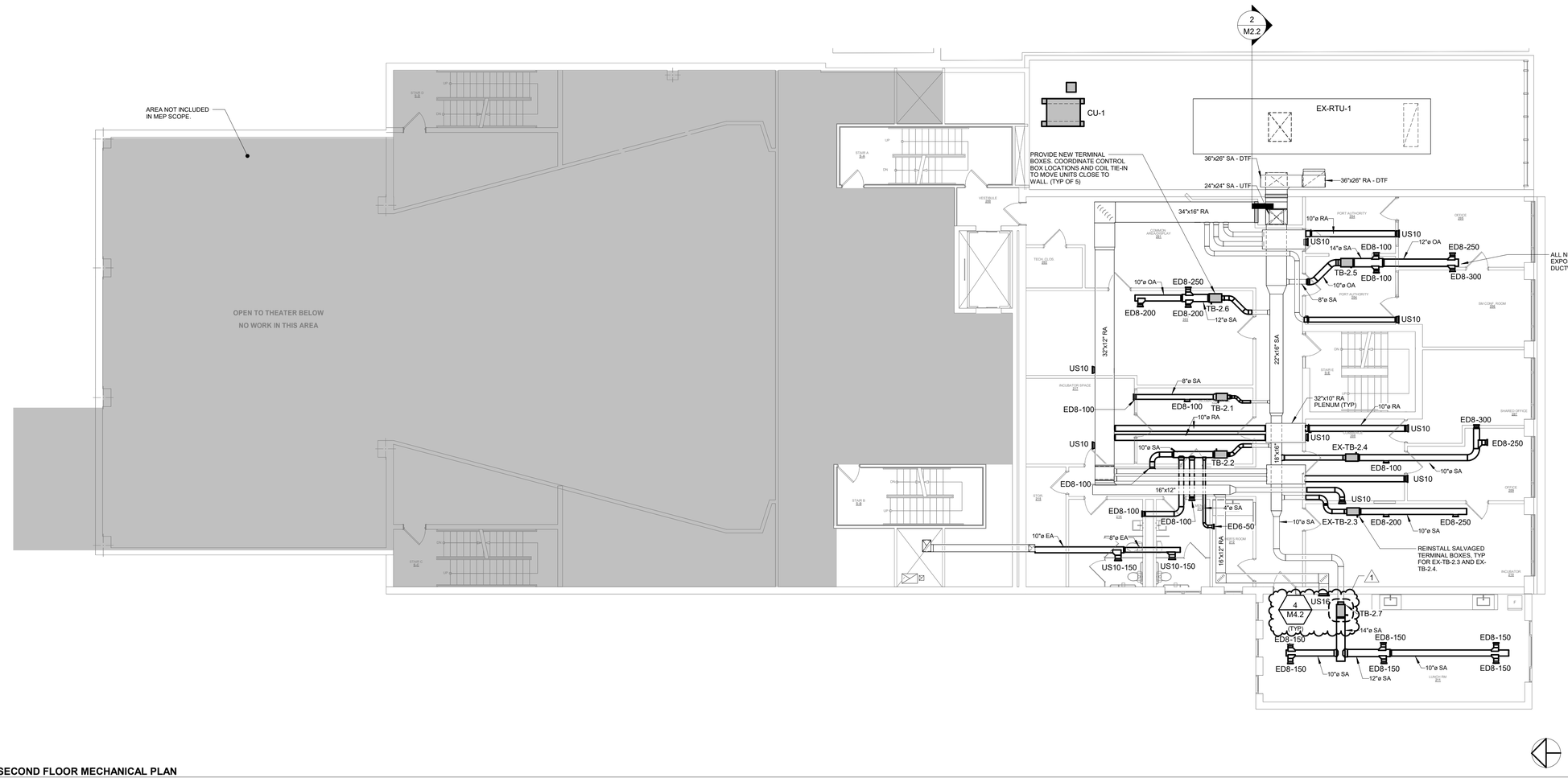

1 M2.3 **SECOND FLOOR MECHANICAL PLAN**
1/8" = 1'-0"

SoL Harris/Day architecture
Designed for People. Designed for Life.
6677 Frank Avenue NW, North Canton, OH 44720 | 330.493.3722 | www.solharrisday.com

STATE OF OHIO
ERIC L WRIGHT
78568
REGISTERED PROFESSIONAL ENGINEER

not published, all rights reserved

Renovation for:
Coshocton Port Authority - Coshocton Collaborative
538 Main St
Coshocton, OH, 43812

MARK	DATE	DESCRIPTION
1	12/01/2023	ADDENDUM NO 1

PROJECT NO: 19.137
DATE: 11/10/2023

SECOND FLOOR DUCTWORK PLAN

M2.3

MECHANICAL NOTES

1. EXISTING CONDITIONS SHOWN ARE BASED ON REVIEW OF REFERENCE DRAWINGS AND GENERAL FIELD REVIEW. REFER THE ATTACHED REFERENCE DOCUMENTS FOR THE ORIGINAL 2000 REFERENCE DESIGN DOCUMENTS. ANY EXISTING CONDITIONS THAT WERE DOCUMENTED AS ALTERED FROM THE ORIGINAL DESIGN ARE INCLUDED IN THE DESIGN DOCUMENTS OTHERWISE THE ASSUMPTION IS THAT THE EXISTING SYSTEM DESIGN PERFORMANCE IS THAT AS SHOWN ON THE 2000 REFERENCE DOCUMENTS.
2. ALL EQUIPMENT AND SYSTEMS NOTED AS EXISTING TO REMAIN SHALL BE REVIEWED PRIOR TO REWORK. IF ANY LARGE DEFICIENCIES NOTED THE CONTRACTOR SHALL INFORM THE PROJECT MANAGER AND ENGINEER.
3. EXISTING DUCTWORK UPSTREAM OF TERMINAL BOXES IS INTERNALLY LINED. EXISTING BRANCHES OFF TERMINAL BOX MAINS UTILIZE EXTERNAL INSULATION. CONTRACTOR SHALL PROVIDE DUCT CLEANING OF ALL EXISTING SYSTEMS.
4. EXISTING VAV UNITS AND ASSOCIATED HEATING WATER PIPING AND DUCTWORK MAINS INSTALLED THROUGHOUT. EXTENSIONS TO GRILLES AND DIFFUSERS ARE NOT INSTALLED.
5. VAV TERMINAL BOXES AND ASSOCIATED CONTROL VALVES HAVE ACTUATORS INSTALLED BUT NOT WIRED AS CONTROL SYSTEM WAS NOT COMPLETED. ASSUME ALL VAV CONTROL ACTUATORS (DAMPER AND VALVE) WILL REQUIRE REPLACEMENT.
6. ALL DUCTWORK TO BE INSTALLED EXPOSED IN AREAS SHALL BE NON-INSULATED SPIRAL ROUND DUCTWORK PREPARED FOR FIELD PAINTING (UNLESS OTHERWISE NOTED).

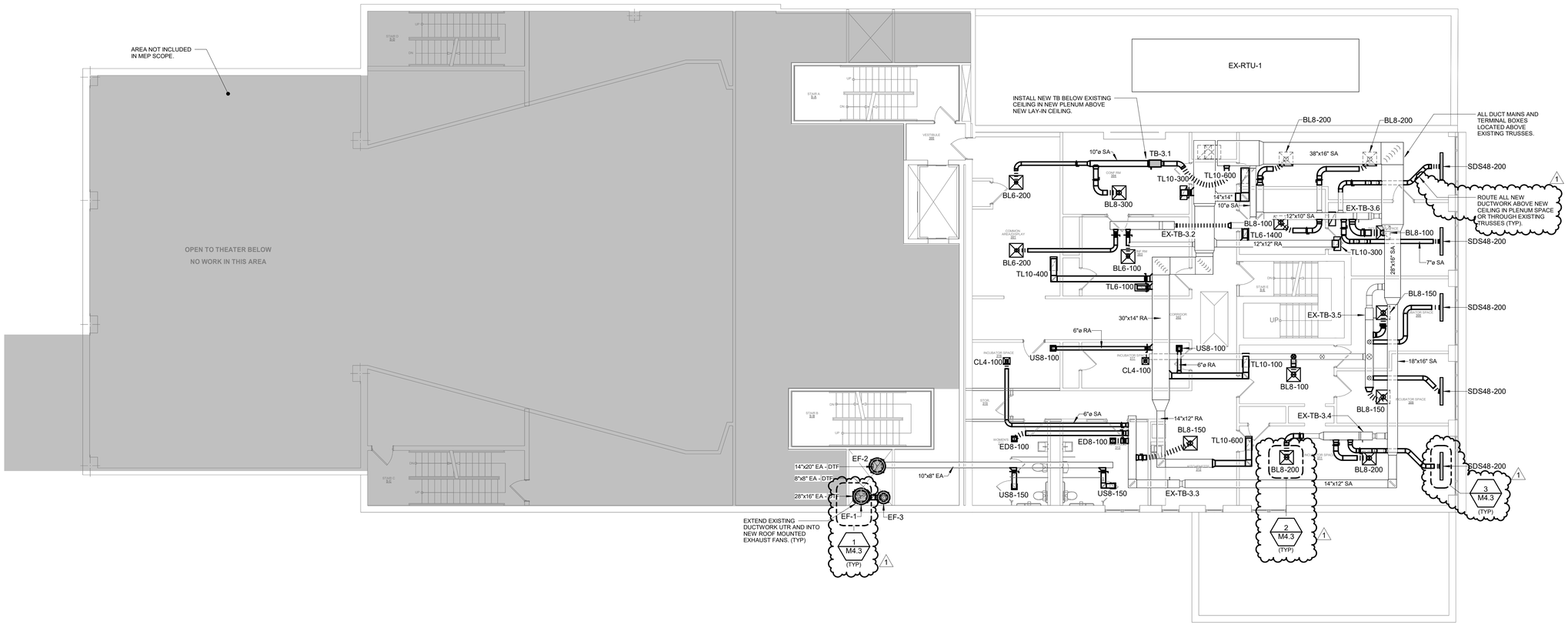

1 M2.4 **THIRD FLOOR DUCTWORK PLAN**
1/8" = 1'-0"

SoL Harris/Day architecture
Designed for People. Designed for Life.
6677 Frank Avenue NW, North Canton, OH 44720 | 330.493.3722 | www.solharrisday.com

STATE OF OHIO
ERIC L. WRIGHT
78568
REGISTERED PROFESSIONAL ENGINEER

not published, all rights reserved

Renovation for:
Coshocton Port Authority - Coshocton Collaborative
538 Main St
Coshocton, OH, 43812

MARK	DATE	DESCRIPTION
1	12/01/2023	ADDENDUM NO 1

PROJECT NO: 19.137
DATE: 11/10/2023

THIRD FLOOR DUCTWORK PLAN

M2.4

MECHANICAL NOTES

1. EXISTING CONDITIONS SHOWN ARE BASED ON REVIEW OF REFERENCE DRAWINGS AND GENERAL FIELD REVIEW. REFER THE ATTACHED REFERENCE DOCUMENTS FOR THE ORIGINAL 2000 REFERENCE DESIGN DOCUMENTS. ANY EXISTING CONDITIONS THAT WERE DOCUMENTED AS ALTERED FROM THE ORIGINAL DESIGN ARE INCLUDED IN THE DESIGN DOCUMENTS OTHERWISE THE ASSUMPTION IS THAT THE EXISTING SYSTEM DESIGN PERFORMANCE IS THAT AS SHOWN ON THE 2000 REFERENCE DOCUMENTS.
2. ALL EQUIPMENT AND SYSTEMS NOTED AS EXISTING TO REMAIN SHALL BE REVIEWED PRIOR TO REWORK. IF ANY LARGE DEFICIENCIES NOTED THE CONTRACTOR SHALL INFORM THE PROJECT MANAGER AND ENGINEER.
3. EXISTING DUCTWORK UPSTREAM OF TERMINAL BOXES IS INTERNALLY LINED. EXISTING BRANCHES OFF TERMINAL BOX MAINS UTILIZE EXTERNAL INSULATION. CONTRACTOR SHALL PROVIDE DUCT CLEANING OF ALL EXISTING SYSTEMS.
4. EXISTING VAV UNITS AND ASSOCIATED HEATING WATER PIPING AND DUCTWORK MAINS INSTALLED THROUGHOUT. EXTENSIONS TO GRILLES AND DIFFUSERS ARE NOT INSTALLED.
5. VAV TERMINAL BOXES AND ASSOCIATED CONTROL VALVES HAVE ACTUATORS INSTALLED BUT NOT WIRED AS CONTROL SYSTEM WAS NOT COMPLETED. ASSUME ALL VAV CONTROL ACTUATORS (DAMPER AND VALVE) WILL REQUIRE REPLACEMENT.
6. ALL DUCTWORK TO BE INSTALLED EXPOSED IN AREAS SHALL BE NON-INSULATED SPIRAL ROUND DUCTWORK PREPARED FOR FIELD PAINTING (UNLESS OTHERWISE NOTED).

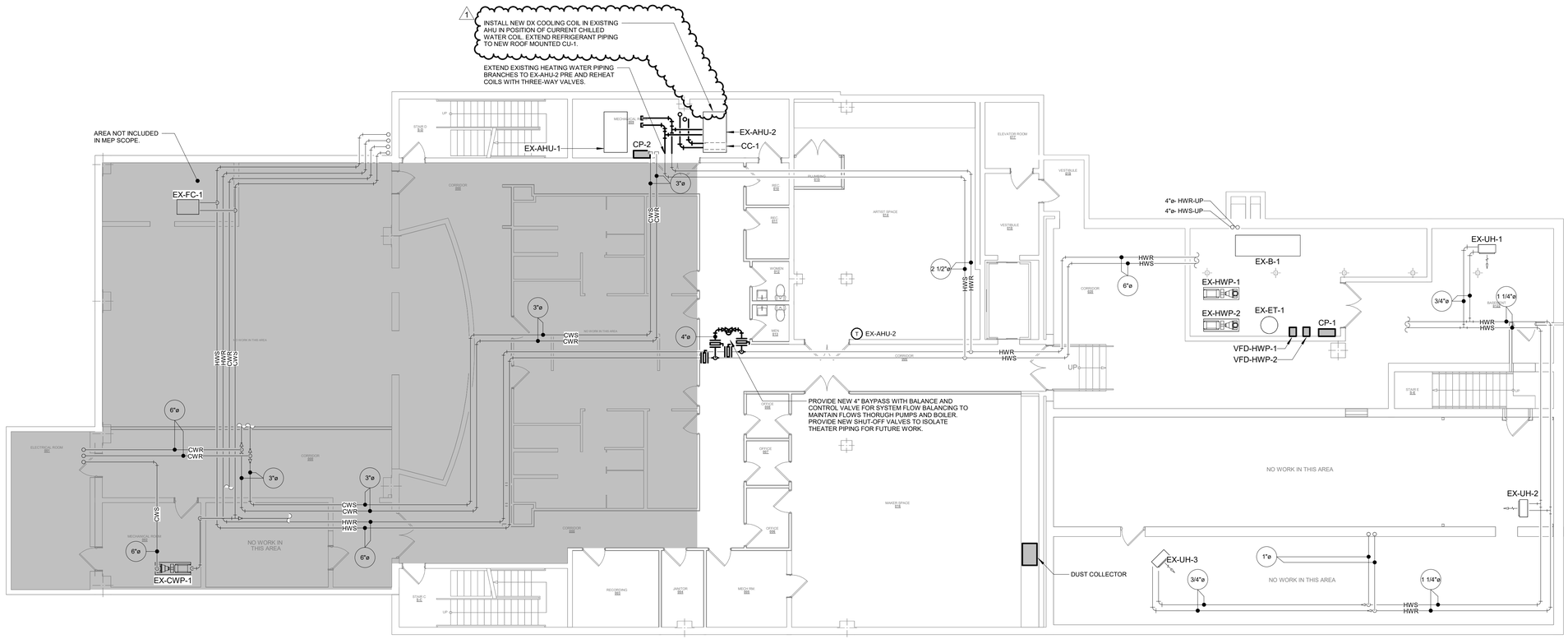

1 M3.1 **BASEMENT MECHANICAL PIPING PLAN**
1/8" = 1'-0"

SoL Harris/Day architecture
Designed for People. Designed for Life.
6677 Frank Avenue NW, North Canton, OH 44720 | 330.493.3722 | www.solharrisday.com

STATE OF OHIO
ERIC L WRIGHT 78568
REGISTERED PROFESSIONAL ENGINEER

not published, all rights reserved

Renovation for:
Coshocton Port Authority - Coshocton Collaborative
538 Main St
Coshocton, OH, 43812

MARK	DATE	DESCRIPTION
1	12/01/2023	ADDENDUM NO 1

PROJECT NO: 19.137
DATE: 11/10/2023

BASEMENT MECHANICAL PIPING PLAN

M3.1

MECHANICAL NOTES

1. EXISTING CONDITIONS SHOWN ARE BASED ON REVIEW OF REFERENCE DRAWINGS AND GENERAL FIELD REVIEW. REFER THE ATTACHED REFERENCE DOCUMENTS FOR THE ORIGINAL 2000 REFERENCE DESIGN DOCUMENTS. ANY EXISTING CONDITIONS THAT WERE DOCUMENTED AS ALTERED FROM THE ORIGINAL DESIGN ARE INCLUDED IN THE DESIGN DOCUMENTS OTHERWISE THE ASSUMPTION IS THAT THE EXISTING SYSTEM DESIGN PERFORMANCE IS THAT AS SHOWN ON THE 2000 REFERENCE DOCUMENTS.
2. ALL EQUIPMENT AND SYSTEMS NOTED AS EXISTING TO REMAIN SHALL BE REVIEWED PRIOR TO REWORK. IF ANY LARGE DEFICIENCIES NOTED THE CONTRACTOR SHALL INFORM THE PROJECT MANAGER AND ENGINEER.
3. EXISTING DUCTWORK UPSTREAM OF TERMINAL BOXES IS INTERNALLY LINED. EXISTING BRANCHES OFF TERMINAL BOX MAINS UTILIZE EXTERNAL INSULATION. CONTRACTOR SHALL PROVIDE DUCT CLEANING OF ALL EXISTING SYSTEMS.
4. EXISTING VAV UNITS AND ASSOCIATED HEATING WATER PIPING AND DUCTWORK MAINS INSTALLED THROUGHOUT. EXTENSIONS TO GRILLES AND DIFFUSERS ARE NOT INSTALLED.
5. VAV TERMINAL BOXES AND ASSOCIATED CONTROL VALVES HAVE ACTUATORS INSTALLED BUT NOT WIRED AS CONTROL SYSTEM WAS NOT COMPLETED. ASSUME ALL VAV CONTROL ACTUATORS (DAMPER AND VALVE) WILL REQUIRE REPLACEMENT.
6. ALL DUCTWORK TO BE INSTALLED EXPOSED IN AREAS SHALL BE NON-INSULATED SPIRAL ROUND DUCTWORK PREPARED FOR FIELD PAINTING (UNLESS OTHERWISE NOTED).

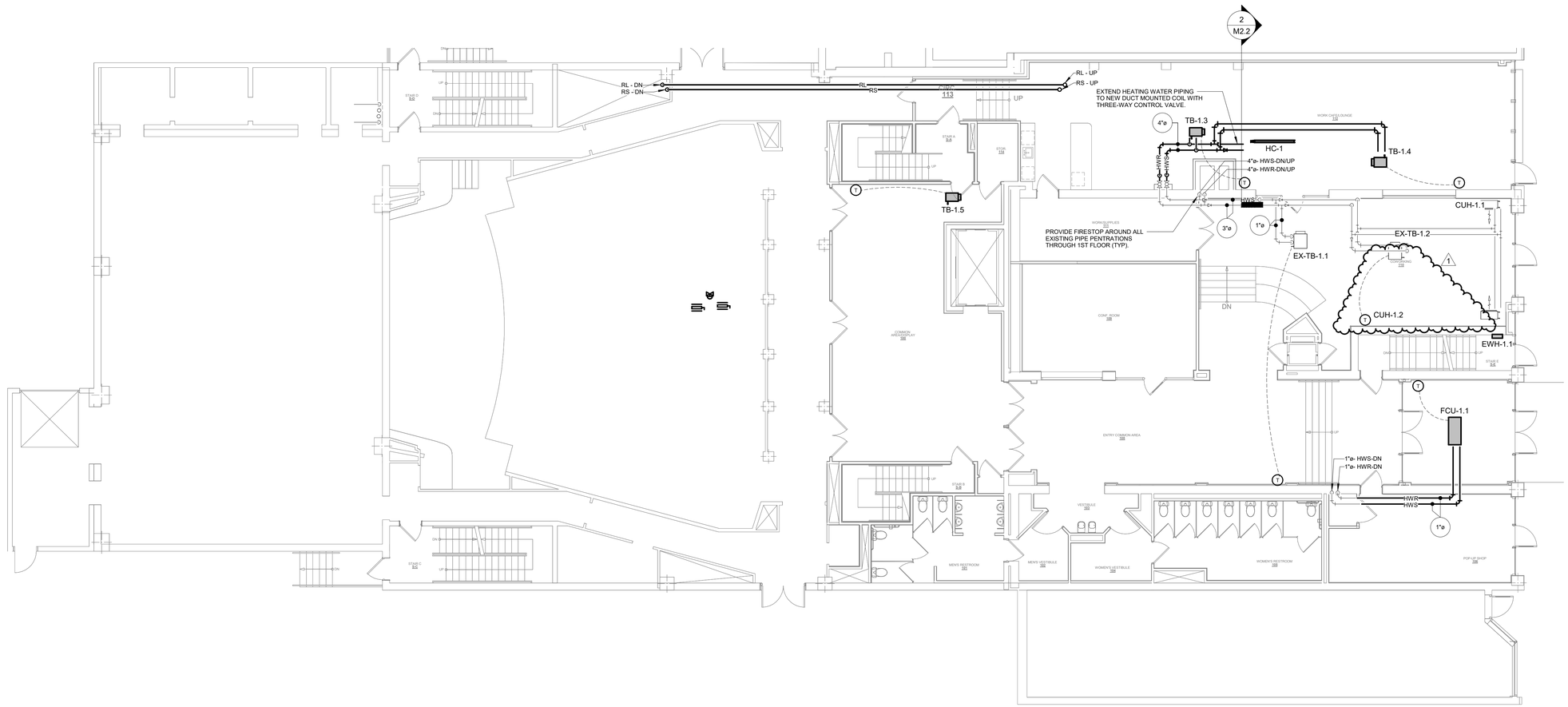

1 M3.2 **SECOND FLOOR DUCTWORK PLAN**
1/8" = 1'-0"

SoL Harris/Day architecture
Designed for People. Designed for Life.
6677 Frank Avenue NW, North Canton, OH 44720 | 330.493.3722 | www.solharrisday.com

STATE OF OHIO
ERIC
L
WRIGHT
78568
REGISTERED
PROFESSIONAL ENGINEER

not published, all rights reserved

Renovation for:
Coshocton Port Authority - Coshocton Collaborative
538 Main St
Coshocton, OH, 43812

MARK	DATE	DESCRIPTION
1	12/01/2023	ADDENDUM NO 1

PROJECT NO: 19.137
DATE: 11/10/2023

FIRST FLOOR MECHANICAL PIPING PLAN

M3.2

MECHANICAL NOTES

1. EXISTING CONDITIONS SHOWN ARE BASED ON REVIEW OF REFERENCE DRAWINGS AND GENERAL FIELD REVIEW. REFER THE ATTACHED REFERENCE DOCUMENTS FOR THE ORIGINAL 2000 REFERENCE DESIGN DOCUMENTS. ANY EXISTING CONDITIONS THAT WERE DOCUMENTED AS ALTERED FROM THE ORIGINAL DESIGN ARE INCLUDED IN THE DESIGN DOCUMENTS OTHERWISE THE ASSUMPTION IS THAT THE EXISTING SYSTEM DESIGN PERFORMANCE IS THAT AS SHOWN ON THE 2000 REFERENCE DOCUMENTS.
2. ALL EQUIPMENT AND SYSTEMS NOTED AS EXISTING TO REMAIN SHALL BE REVIEWED PRIOR TO REWORK. IF ANY LARGE DEFICIENCIES NOTED THE CONTRACTOR SHALL INFORM THE PROJECT MANAGER AND ENGINEER.
3. EXISTING DUCTWORK UPSTREAM OF TERMINAL BOXES IS INTERNALLY LINED. EXISTING BRANCHES OFF TERMINAL BOX MAINS UTILIZE EXTERNAL INSULATION. CONTRACTOR SHALL PROVIDE DUCT CLEANING OF ALL EXISTING SYSTEMS.
4. EXISTING VAV UNITS AND ASSOCIATED HEATING WATER PIPING AND DUCTWORK MAINS INSTALLED THROUGHOUT. EXTENSIONS TO GRILLES AND DIFFUSERS ARE NOT INSTALLED.
5. VAV TERMINAL BOXES AND ASSOCIATED CONTROL VALVES HAVE ACTUATORS INSTALLED BUT NOT WIRED AS CONTROL SYSTEM WAS NOT COMPLETED. ASSUME ALL VAV CONTROL ACTUATORS (DAMPER AND VALVE) WILL REQUIRE REPLACEMENT.
6. ALL DUCTWORK TO BE INSTALLED EXPOSED IN AREAS SHALL BE NON-INSULATED SPIRAL ROUND DUCTWORK PREPARED FOR FIELD PAINTING (UNLESS OTHERWISE NOTED).

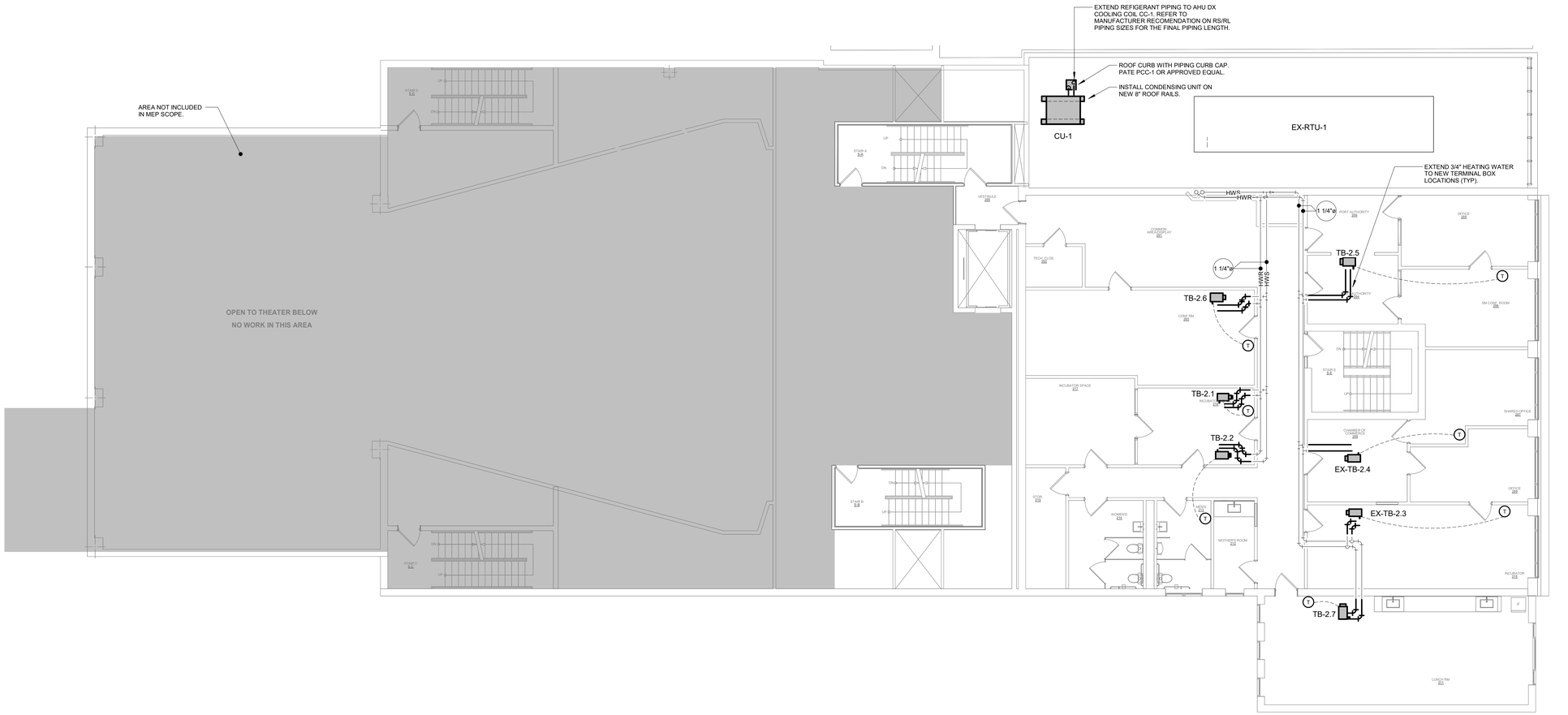

1 M3.3 **SECOND FLOOR MECHANIC PIPING PLAN**
1/8" = 1'-0"

SoL Harris/Day architecture
Designed for People. Designed for Life.
6677 Frank Avenue NW, North Canton, OH 44720 | 330.493.3722 | www.solharrisday.com

STATE OF OHIO
ERIC L. WRIGHT
78568
REGISTERED PROFESSIONAL ENGINEER

not published, all rights reserved

Renovation for:
Coshocton Port Authority - Coshocton Collaborative
538 Main St
Coshocton, OH, 43812

MARK	DATE	DESCRIPTION

PROJECT NO: 19.137
DATE: 11/10/2023

SECOND FLOOR MECHANIC PIPING PLAN

M3.3

MECHANICAL NOTES

1. EXISTING CONDITIONS SHOWN ARE BASED ON REVIEW OF REFERENCE DRAWINGS AND GENERAL FIELD REVIEW. REFER THE ATTACHED REFERENCE DOCUMENTS FOR THE ORIGINAL 2000 REFERENCE DESIGN DOCUMENTS. ANY EXISTING CONDITIONS THAT WERE DOCUMENTED AS ALTERED FROM THE ORIGINAL DESIGN ARE INCLUDED IN THE DESIGN DOCUMENTS OTHERWISE THE ASSUMPTION IS THAT THE EXISTING SYSTEM DESIGN PERFORMANCE IS THAT AS SHOWN ON THE 2000 REFERENCE DOCUMENTS.
2. ALL EQUIPMENT AND SYSTEMS NOTED AS EXISTING TO REMAIN SHALL BE REVIEWED PRIOR TO REWORK. IF ANY LARGE DEFICIENCIES NOTED THE CONTRACTOR SHALL INFORM THE PROJECT MANAGER AND ENGINEER.
3. EXISTING DUCTWORK UPSTREAM OF TERMINAL BOXES IS INTERNALLY LINED. EXISTING BRANCHES OFF TERMINAL BOX MAINS UTILIZE EXTERNAL INSULATION. CONTRACTOR SHALL PROVIDE DUCT CLEANING OF ALL EXISTING SYSTEMS.
4. EXISTING VAV UNITS AND ASSOCIATED HEATING WATER PIPING AND DUCTWORK MAINS INSTALLED THROUGHOUT. EXTENSIONS TO GRILLES AND DIFFUSERS ARE NOT INSTALLED.
5. VAV TERMINAL BOXES AND ASSOCIATED CONTROL VALVES HAVE ACTUATORS INSTALLED BUT NOT WIRED AS CONTROL SYSTEM WAS NOT COMPLETED. ASSUME ALL VAV CONTROL ACTUATORS (DAMPER AND VALVE) WILL REQUIRE REPLACEMENT.
6. ALL DUCTWORK TO BE INSTALLED EXPOSED IN AREAS SHALL BE NON-INSULATED SPIRAL ROUND DUCTWORK PREPARED FOR FIELD PAINTING (UNLESS OTHERWISE NOTED).

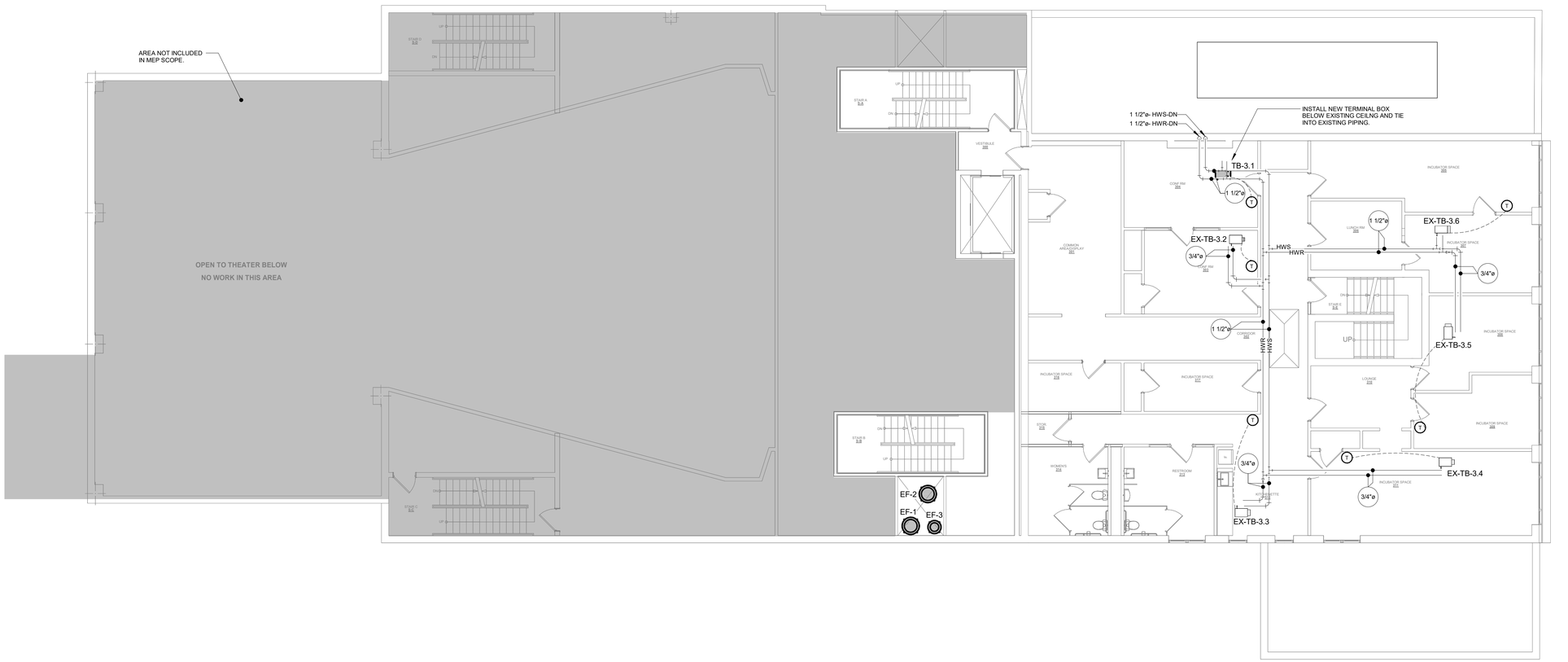

1 M3.4 **THIRD FLOOR MECHANICAL PIPING PLAN**
1/8" = 1'-0"

SoL Harris/Day architecture
Designed for People. Designed for Life.
6677 Frank Avenue NW, North Canton, OH 44720 | 330.493.3722 | www.solharrisday.com

STATE OF OHIO
ERIC L WRIGHT 78568
REGISTERED PROFESSIONAL ENGINEER

not published. all rights reserved

Renovation for:
Coshocton Port Authority - Coshocton Collaborative
538 Main St
Coshocton, OH, 43812

MARK	DATE	DESCRIPTION

PROJECT NO: 19.137
DATE: 11/10/2023

THIRD FLOOR MECHANICAL PIPING PLAN

M3.4

EXISTING EQUIPMENT SCHEUDLES SHOWN FOR REFERENCE.
REBALANCE ALL EQUIPMENT AS SCHEUDLED.

EXISTING ROOFTOP AIR HANDLING UNIT SCHEDULE

REMARKS:
1. REBALANCE EXISITNG UNIT TO SCHEDULED AIRFLOW VALUES.
2. PROVIDE NEW SET OF FILTERS TO BE INSTALLED IN THE UNIT AFTER PROJECT COMPLETION AND ADDITIONAL SET FOR ATTIC STORAGE.

				SUPPLY FAN			COOLING COILS - DX				CONDENSER		FILTERS	ELECTRICAL					
MARK	MANUFACTURER	MODEL	MIN OA	CFM	ESP (IN W.C.)	MHP / QTY	EDB / EWB (F)	LDB / LWB (F)	SENS MBH	TOTAL MBH	REFRIGERANT	COMP QTY	PRE-FILTER	VOLTS / PHASE	MCA	MOCP	DISCONNECT BY	OPERATING WEIGHT (LBS)	REMARKS
EX-RTU-1	CARRIER	50FP-064-F-600MJ	5,500	13000	1.5	15	88 / 71	55	54.0	682.0	R-22	2	MERV 8	460/3	163	200	EC	-	1, 2

EXISTING BOILER SCHEDULE

MARK	MANUFACTURER	MODEL	FUEL	BOILER TYPE	GAS PRESS RANGE	INPUT MBH	OUTPUT MBH	FLUID	EWT (°F)	LWT (°F)	DESIGN FLOW (GPM)	RELIEF VALVE SET PRESS (PSI)	ELECTRICAL VOLTS/PH	REMARKS
EX-B-1	BRYAN BOILERS	CL-300	NAT. GAS	NON-CONDENSING	7-14" W.C.	3000	2400	WATER	160	180	240	60	120/1	

EXISTING HYDRONIC PUMP SCHEDULE

1. PUMPS TO BE CONTROLLED BY NEW VFD'S. REBLANCE PUMPS AS SCHEUDLED.

MARK	MANUFACTURER	MODEL	TYPE	FLUID	SERVICE	GPM	HEAD (FT)	RPM	MHP	ELECTRICAL VOLTS/PH	REMARKS
EX-HWP-1	BELL & GOSSET	1510 2 1/2"BB	END SUCTION	WATER	HEATING WATER	240	50	1760	7.5	480/3	1
EX-HWP-2	BELL & GOSSET	1510 2 1/2"BB	END SUCTION	WATER	HEATING WATER	240	50	1760	7.5	480/3	1

EXISTING HYDRONIC UNIT HEATER SCHEDULE

REMARKS:
1. TAB CONTRACTOR SHALL ADJUST MANUAL BALNCE DAMPERS TO FLOW AS SCHEDULED.

					HEATING COIL						ELECTRICAL		
MARK	MANUFACTURER	MODEL	TYPE	AIRFLOW	MAX CAPACITY (MBH)	FLUID	GPM	EWT (F)	LWT (F)	MAX WPD (FT)	VOLTS/PHASE	HP	REMARKS
EX-UH-1	TRANE	18	S	280	6.8	WATER	1.0	200	180	0.1	120/1	0.05	1
EX-UH-2	TRANE	18	S	280	5.0	WATER	0.4	200	180	0.1	120/1	0.05	1
EX-UH-3	TRANE	18	S	280	6.8	WATER	1.0	200	180	0.1	120/1	0.05	1

EXISTING MODULAR AIR HANDLING UNIT SCHEDULE

NOTES:
1. EXISTING HYDRONIC COOLING COIL TO BE REMOVED AND REPLACED WITH DX COIL. COORDINATE REMOVAL WITH MANUFATUER. REFER TO COOLING COIL SCHEDUEL FOR REPLACEMENT COIL.
2. TIE EXISINTG PRE-HEAT AND RE-HEAT COILS INTO HEATING WATER SYSTEM WITH THREE-WAY VALVES.
3. REBALANCE AIR AND WATER FLOW VALUES AS INDICATED IN THE SCHEDULE.
4. PROIVDE NEW SET OF FILTERS AFTER CONSTRUCTION IS COMPLETE AND ONE (1) ADDITIONAL SET FOR ATTIC STOCK.

				SUPPLY FAN				PRE-HEAT COIL								RE-HEATING COIL									
MARK	MFR	SERVICE	MIN OA	CFM (TOTAL)	ESP (IN W.C.)	TSP	MHP (EA)	FLUID	GPM	EWT	LWT	MAX WPD (FT)	EAT	LAT	TOTAL CAPACITY (MBH)	FLUID	GPM	EWT	LWT	EAT	LAT	TOTAL CAPACITY (MBH)	PRE-FILTER	VOLTS/PHASE	REMARKS
EX-AHU-2	CARRIER	39LD06	850	2280	2	3.5	3	WATER	10	180	160	1.1	40	80	100	WATER	10	180	160	60	100	100	MERV 8	460/3	1, 2, 3, 4

CONDENSING UNIT SCHEDULE

1. CONDENSING UNIT SAHLL BE INSTALLED ON NEW ROOF RAILS.
1, 2

				AMBIENT TEMP (°F)		REFRIGERANT			ELECTRICAL				ASSOCIATED	
MARK	MANUFACTURER	MODEL	COOLING MBH	DESIGN	LOW	TYPE	CONTROL	EER	VOLTS/PH	MCA	MOCP	DISCONNECT BY	INDOOR UNIT	REMARKS
CU-1	CARRIER	38AUZ	115	95	40	R-410A	TWO STAGE	11.2	480/3	17	25	EC	AHU-2 / CC-1	1, 2

DX COOLING COIL (AHU-2)

REMARKS:
1. CONTRACTOR SHALL FIELD CONFIRM COIL HANDING AND SIZE PRIOR TO ORDERING.
2. COIL TO BE INSTALLED WITHIN AHU-2 IN THE POSITION OF TEH CURRENT CHILLED WATER COIL. CONFIRM REPLACEMENT PROCESS WITH CARRIER REPRESENTATIVE.
3. COIL SHALL BE COMPATIBLE WITH ASSOCAITED OUTDOOR CONDENSING UNIT CU-1 AND SIZED TO FIX WITHIN EXISTING CARRIER AHU-2.

MARK	MANUFACTURER	MODEL	SERVICE	AIRFLOW	MAX APD (IN. W.C.)	REFIGERANT	ROWS	FPI	FACE AREA (SF)	EAT (F)	LAT (F)	TOTAL CAPACITY (MBH)	SENSIBLE CAPCITY (MBH)	ASSOCIATED UNIT	REMARKS
CC-1	SFI COILS	39LF06	DX COOLING	2500	.82	R-410A	6	10	4.72	80/67	55/54	93	67	CU-1 / AHU-2	1, 2, 3

ELECTRIC WALL HEATER SCHEDULE

REMARKS:
1. FURNISH WITH INTEGRAL THERMOSTAT.
2. FURNISH WITH 24V RELAY AND TRANSFORMER.

					DIMENSIONS			ELECTRICAL				
MARK	MANUFACTURER	MODEL	TYPE	INSTALLATION	HEIGHT (IN)	DEPTH (IN)	LENGTH (IN)	VOLTS/PH	CAPACITY (KW)	FLA	DISCONNECT BY	REMARKS
EWH-1.1	IINDEECO	WAI	WALL	SURFACE	22.75	6"	16"	208/1	3	14.8	MFR	1, 2

VARIABLE FREQUENCY DRIVE SCHEDULE

REMARKS:
1. VFDS SHALL BE FURNISHED BY THE TCC AND INSTALLED BY THE EC UNLESS NOTED OTHERWISE.
2. ITEGRATE INTO EXISTING HEATING WATER PUMP EX-HWP-1 & 2 TO USE FOR SYSTEM BALACING.

MARK	MANUFACTURER	MODEL	VOLTS/PH	HP	BYPASS	PULSE	CIRCUIT BREAKER DISCONNECT
VFD-HWP-1	ABB	ACH580-PCR-012A-4	460/3	7.5	NO	6	YES
VFD-HWP-2	ABB	ACH580-PCR-012A-4	460/3	7.5	NO	6	YES

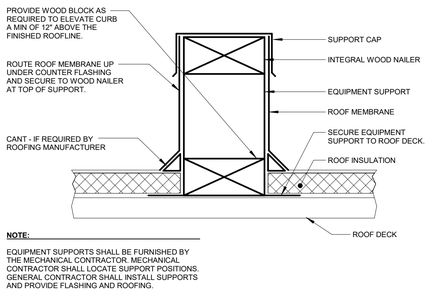

3 M4.1 ROOF MOUNTED EQUIPMENT INSTALLATION DETAIL
NTS

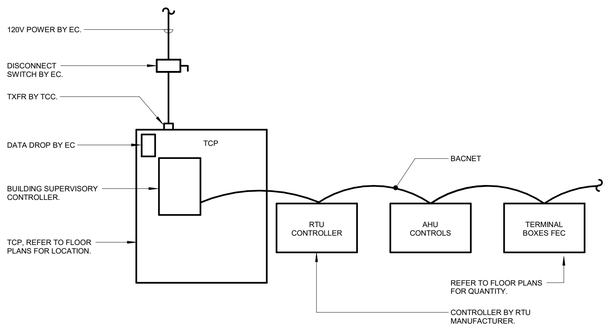

1 M4.1 SYSTEM ARCHITECTURE
NTS

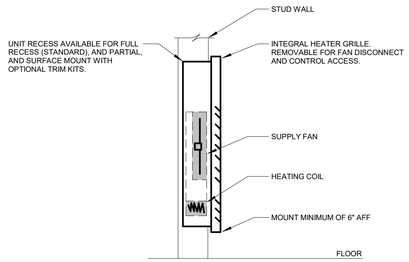

2 M4.1 ELECTRIC WALL HEATER
NTS

Sol Harris/Day architecture
Designed for People. Designed for Life.
6677 Frank Avenue NW, North Canton, OH 44720 | 330.493.3722 | www.solharrisday.com

STATE OF OHIO
ERIC L WRIGHT 78568
REGISTERED PROFESSIONAL ENGINEER
all rights reserved
not published, all rights reserved

Renovation for:
Coshocton Port Authority - Coshocton Collaborative
538 Main St
Coshocton, OH, 43812

MARK	DATE	DESCRIPTION

PROJECT NO: 19.137
DATE: 11/10/2023

MECHANICAL SCHEDULES AND DETAILS

M4.1

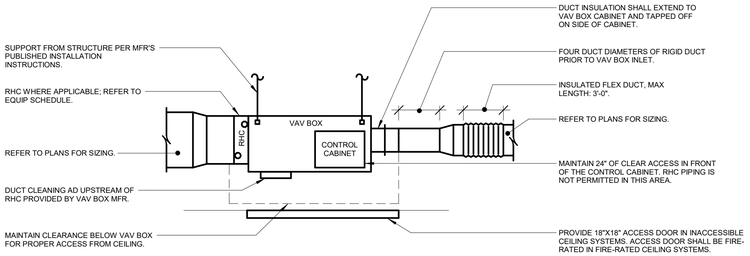

4 / M4.2 TERMINAL BOX INSTALLATION DETAIL
NTS

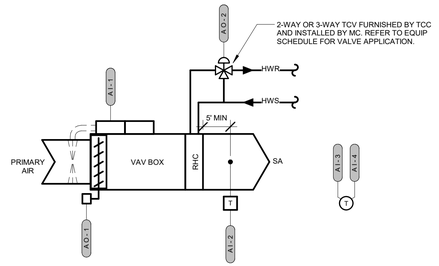

3 / M4.2 TERMINAL BOX CONTROLS DIAGRAM (HYDRONIC REHEAT)
NTS

TERMINAL BOX CONTROL POINTS LIST (HYDRONIC REHEAT)	
POINT	DESCRIPTION
AO-1	VAV BOX DAMPER MODULATION
AO-2	RHC TCV MODULATION
AI-1	AIRFLOW (CFM)
AI-2	VAV BOX DISCHARGE TEMP
AI-3	SPACE TEMP
AI-4	SPACE TEMP SETPOINT

TERMINAL BOX SCHEDULE (HYDRONIC REHEAT)

REMARKS:
1. RE-HEAT COIL PERFORMANCE SHALL BE BASED ON 180°F EWT AND 160°F LWT.
2. RE-HEAT COIL WPD SHALL NOT EXCEED 10FT W.C. HEAD PRESSURE.
3. RE-HEAT COIL CAPACITY SHALL BE BASED ON THE MINIMUM AIRFLOW.
4. ASSEMBLY PRESSURE DROP SHALL NOT EXCEED 0.25" W.C. AT MAX AIRFLOW (INCLUDING REHEAT COIL).
5. EXISTING UNITS SHALL BE REVIEWED BY CONTRACTOR AND OPERATION CONFIRMED BEFORE RENOVATIONS BEGIN.
6. PROVIDE NEW 3-WAY CONTROL VALVE. ON EXISTING UNITS REMOVE 2-WAY VALVES AND REWORK PIPING FOR NEW VALVE.
7. REBALANCE EXISTING UNITS TO CFM AND GPM FLOWS AS SCHEUDLED.

					HYDRONIC REHEAT COIL						
MARK	MANUFACTURER	MODEL	MAX AIRFLOW	INLET SIZE	MIN AIRFLOW	EWT	LWT	MBH	GPM	CONTROL VALVE TYPE	REMARKS
EX-TB-1.1	EXISTING	-	2050	16	1270	180	160	64	6.4	2-WAY	5, 7
EX-TB-1.2	EXISTING	-	1850	16	1210	180	160	61	6.1	2-WAY	5, 7
TB-1.3	TITUS	DESV	800	10	520	180	160	27	2.7	2-WAY	1,2,3,4
TB-1.4	TITUS	DESV	1100	12	650	180	160	33	3.3	3-WAY	1,2,3,4,6
TB-1.5	TITUS	DESV	600	10	400	180	160	20	2	2-WAY	1,2,3,4
TB-2.1	TITUS	DESV	200	4	130	180	160	7	0.7	2-WAY	1,2,3,4
TB-2.2	TITUS	DESV	350	6	210	180	160	11	1.1	3-WAY	1,2,3,4,6
EX-TB-2.3	EXISTING	-	500	7	260	180	160	14	1.4	2-WAY	5, 7
EX-TB-2.4	EXISTING	-	650	8	260	180	160	14	1.4	2-WAY	5, 7
TB-2.5	TITUS	DESV	750	10	560	180	160	28	2.8	3-WAY	1,2,3,4,6
TB-2.6	TITUS	DESV	650	7	520	180	160	27	2.7	2-WAY	1,2,3,4
TB-2.7	TITUS	DESV	900	10	520	180	160	27	2.7	3-WAY	1,2,3,4,6
TB-3.1	TITUS	DESV	500	8	330	180	160	17	1.7	3-WAY	1,2,3,4,6
EX-TB-3.2	EXISTING	-	300	6	200	180	160	10	1.0	2-WAY	5, 7
EX-TB-3.3	EXISTING	-	450	10	360	180	160	18	1.8	3-WAY	5, 6, 7
EX-TB-3.4	EXISTING	-	600	8	330	180	160	17	1.7	2-WAY	5, 7
EX-TB-3.5	EXISTING	-	900	10	560	180	160	28	2.8	2-WAY	5, 7
EX-TB-3.6	EXISTING	-	1050	12	690	180	160	35	3.5	2-WAY	5, 7

IN-DUCT HEATING COIL SCHEDULE

REMARKS:
1.CONTRACTOR SHALL FIELD CONFIRM COIL HANDING AND DUCT INSTALLATION TYPE PRIOR TO ORDERING.
2. TCC TO THREE-WAY CONTROL VALVE FOR COIL FLOW CONTROL.

MARK	MANUFACTURER	MODEL	SERVICE	AIRFLOW	MAX APD (IN. W.C.)	FLUID	GPM	EWT (F)	LWT (F)	EAT (F)	LAT (F)	TOTAL CAPACITY (MBH)	MAX WPD (FT)	REMARKS
HC-1	PRECISION COILS	HW58FF01H14-36X66	SA HEATING - RTU-1	13,000	.2	WATER	52	180	160	35	70	505	10	1, 2

FAN COIL UNIT SCHEDULE (HEATING ONLY)

REMARKS:
1. FURNISH EACH UNIT WITH ECM FAN.
2. FURNISH WITH RETUN AIR PLENUM FOR DUCTWORK CONNECTION.

						FAN			HEATING COIL								
MARK	SERVICE	MANUFACTURER	STYLE	MODEL	MIN OA (CFM)	CFM	ESP (IN W.C.)	MHP	FLUID	GPM	EWT	LWT	EAT	LAT	TOTAL CAPACITY (MBH)	PRE-FILTER	VOLTS/PH	REMARKS
FCU-1.1	ENTRY VESIBULE	DAIKIN	HORIZONTAL CONCEALED	FHHH-206A	0	600	.25	.25	WATER	3	180	160	40	95	35	2" MERV 8	120/1	

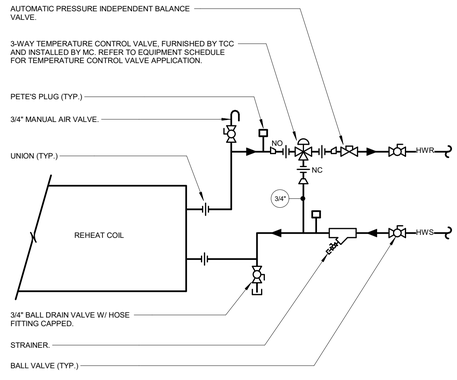

NOTES:
1. PROVIDE 8" OF CLEARANCE AT PETE'S PLUG FOR INSERTION OF TEST DEVICES.
2. SHUT-OFF VALVES, STRAINERS, BALANCING VALVES AND UNIONS OR FLANGES SHALL BE FULL PIPE SIZE. PIPING TO COIL CONNECTIONS SHALL NOT BE SMALLER THAN COIL CONNECTION SIZE.
3. SEE FLOOR PLAN DRAWINGS FOR SIZES OF BRANCH PIPING TO HEATING COILS.
4. THIS DETAIL APPLIES TO TERMINAL BOXES WITH HYDRONIC REHEAT, CABINET UNIT HEATERS AND UNIT HEATERS CONTROLLED VIA THREE-WAY VALVES.
5. HEATING WATER SUPPLY SHALL BE PIPED TO THE LEAVING AIR SIDE OF THE COIL.

1 / M4.2 HEATING COIL PIPING DIAGRAM (THREE-WAY)
NTS

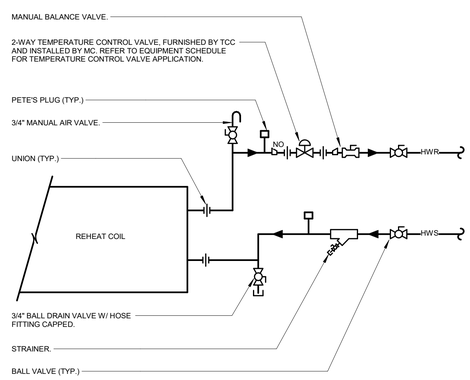

NOTE:
1. PROVIDE 8" OF CLEARANCE AT PETE'S PLUG FOR INSERTION OF TEST DEVICES.
2. SHUT-OFF VALVES, STRAINERS, BALANCING VALVES AND UNIONS OR FLANGES SHALL BE FULL PIPE SIZE. PIPING TO COIL CONNECTIONS SHALL NOT BE SMALLER THAN COIL CONNECTION SIZE.
3. SEE FLOOR PLAN DRAWINGS FOR SIZES OF BRANCH PIPING TO HEATING COILS.
4. THIS DETAIL APPLIES TO TERMINAL BOXES WITH HYDRONIC REHEAT, CABINET UNIT HEATERS AND UNIT HEATERS CONTROLLED VIA TWO-WAY VALVES.
5. HEATING WATER SUPPLY SHALL BE PIPED TO THE LEAVING AIR SIDE OF THE COIL.

2 / M4.2 HEATING COIL PIPING DIAGRAM (TWO-WAY)
NTS

TCC SHALL FIELD INSTALL CONTROLS IN EACH FCU.

FAN COIL UNIT (TWO-PIPE) CONTROL POINT SCHEDULE	
POINT	DESCRIPTION
AO-1	HEATING VALVE MODULATION
AO-2	SF SPEED MODULATION
AI-1	SUPPLY AIR TEMP
AI-2	FAN MOTOR AMPS
DO-2	SF START/STOP
INT-1	BACNET

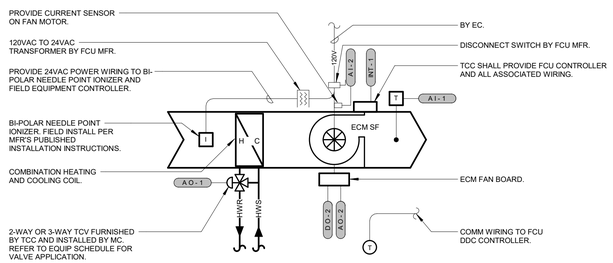

5 / M4.2 FAN COIL UNIT CONTROLS DIAGRAM (TWO-PIPE)
NTS

Sol Harris/Day architecture
Designed for People. Designed for Life.
6677 Frank Avenue NW, North Canton, OH 44720 | 330.493.3722 | www.solharrisday.com

STATE OF OHIO
ERIC L WRIGHT
78568
REGISTERED PROFESSIONAL ENGINEER

not published, all rights reserved

Renovation for:
Coshocton Port Authority - Coshocton Collaborative
538 Main St
Coshocton, OH, 43812

MARK	DATE	DESCRIPTION

PROJECT NO: 19.137
DATE: 11/10/2023

MECHANICAL SCHEDULES AND DETAILS

M4.2

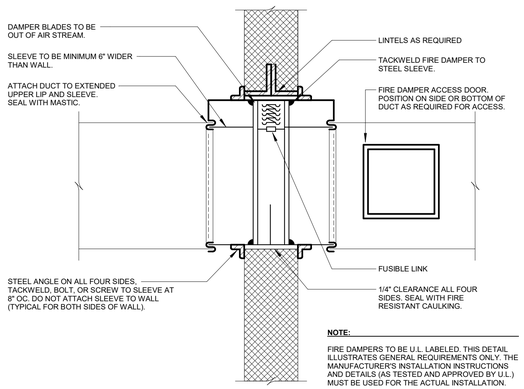

NOTE:

FIRE DAMPERS TO BE U.L. LABELED. THIS DETAIL ILLUSTRATES GENERAL REQUIREMENTS ONLY. THE MANUFACTURER'S INSTALLATION INSTRUCTIONS AND DETAILS (AS TESTED AND APPROVED BY U.L.) MUST BE USED FOR THE ACTUAL INSTALLATION.

7 / M4.3 VERTICAL FIRE DAMPER INSTALLATION DETAIL
NTS

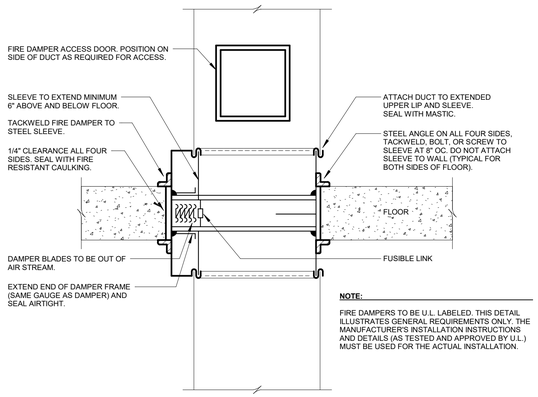

NOTE:

FIRE DAMPERS TO BE U.L. LABELED. THIS DETAIL ILLUSTRATES GENERAL REQUIREMENTS ONLY. THE MANUFACTURER'S INSTALLATION INSTRUCTIONS AND DETAILS (AS TESTED AND APPROVED BY U.L.) MUST BE USED FOR THE ACTUAL INSTALLATION.

8 / M4.3 HORIZONTAL FIRE DAMPER INSTALLATION DETAIL
NTS

EXHAUST FAN SCHEDULE

REMARKS:
1. FURNISH WITH BACKDRAFT DAMPER.
2. FURNISH WITH A GALVANIZED BIRD SCREEN ON EXHAUST FAN OUTLET.
3. FURNISH WITH EC MOTOR WITH MOTOR MOUNTED PONTENTIOMETER FOR FAN BALANCING AND 0-10V CONTROL WIRE INPUTS FOR BAS CONTROL.
4. PROVIDE WITH FACTORY FURNISHED NEMA-1 DISCONNECT SWITCH.
5. BALANCE FAN TO 1,000 CFM FOR CURRENT CONNECTED LOAD. FAN SIZED FOR FUTURE EXHAUST LOAD AFTER FITOUT.
6. UNITS SHALL BE SET TO OPERATE DURING ALL OCCUPIED HOURS (ADJ.) BY BAS CONTROL SYSTEM.
7. UNIT SHALL OPERATE 24/7.

										ELECTRICAL					DIMENSIONS			
MARK	MANUFACTURER	MODEL	TYPE	SERVICE	AIRFLOW (CFM)	ESP (IN W.C.)	FAN RPM	DRIVE TYPE	ROOF CURB	VOLTS/PH	BHP	MHP	DISCONNECT BY	STARTER BY	ROOF OPENING	CURB CAP	WEIGHT (LBS)	REMARKS
EF-1	GREENHECK	G-140-VG	ROOF MOUNTED DOWNBLAST	GENERAL EXHAUST	2,200	1	1,410	DIRECT (ECM)	YES	208/3	1.08	2	MFR	MFR	18.5"	22"	69	1, 2, 3, 4, 5, 6
EF-2	GREENHECK	G-140-VG	ROOF MOUNTED DOWNBLAST	GENERAL EXHAUST	1,600	1	1,497	DIRECT (ECM)	YES	115/1	0.68	1	MFR	MFR	18.5"	22"	69	1, 2, 3, 4, 6
EF-3	GREENHECK	G-140-VG	ROOF MOUNTED DOWNBLAST	GENERAL EXHAUST	150	0.5	1,457	DIRECT (ECM)	YES	115/1	0.05	0.1	MFR	MFR	12.5"	17"	28	1, 2, 3, 4, 7

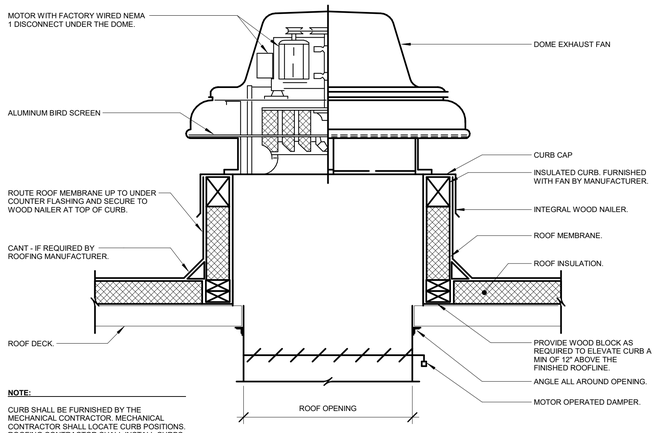

NOTE:

CURB SHALL BE FURNISHED BY THE MECHANICAL CONTRACTOR. MECHANICAL CONTRACTOR SHALL LOCATE CURB POSITIONS. ROOFING CONTRACTOR SHALL INSTALL CURBS AND PROVIDE FLASHING AND ROOFING.

1 / M4.3 CENTRIFUGAL EXHAUST FAN INSTALLATION DETAIL - FLAT ROOF

EXHAUST FAN CONTROL POINTS LIST	
POINT	DESCRIPTION
DO-1	EXHAUST FAN START/STOP
DI-1	EXHAUST FAN STATUS

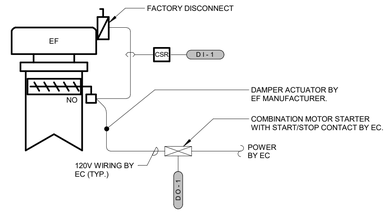

4 / M4.3 EXHAUST FAN CONTROL DIAGRAM
NTS

GRILLE AND DIFFUSER SCHEDULE

REMARKS:
1. FINISH SHALL BE WHITE, UNLESS NOTED OTHERWISE.
2. FURNISH ALL DIFFUSERS WITH FACTORY INSULATED R-6 FOIL-BACKED INSULATION.
3. BALANCE ALL EXISTING GRILLES AND DIFFUSERS TAGGED "EX" TO THE AIRFLOW INDICATED ON THE PLANS.
4. FURNISH WITH OPPOSED BLADE DAMPER.

MARK	MANUFACTURER	MODEL	SERVICE	MOUNTING	INLET SIZE	OVERALL SIZE	MAX AIRFLOW (CFM) EACH	THROW PATTERN	MAX NC	REMARKS
BL6	PRICE	SPD	SUPPLY	SURFACE	6" DIA	24"x24"	215	4-WAY	25	1, 2
BL8	PRICE	SPD	SUPPLY	SURFACE	8" DIA	24"x24"	330	4-WAY	25	1, 2
CL4	PRICE	SPD	SUPPLY	SURFACE	4" DIA	12"x12"	150	4-WAY	25	1, 2
ED6	PRICE	520	SUPPLY	SURFACE	6"x6"	8"x8"	250	ADJUSTABLE	25	1, 4
ED8	PRICE	520	SUPPLY	SURFACE	8"x8"	10"x10"	335	ADJUSTABLE	25	1, 4
ED12	PRICE	520	SUPPLY	SURFACE	12"x12"	14"x14"	400	ADJUSTABLE	25	1, 4
TL6	PRICE	80	RETURN/EXHAUST	LAY-IN	6"x10"	24"x12"	330	N/A	25	1
TL10	PRICE	80	RETURN/EXHAUST	LAY-IN	10"x10"	24"x12"	570	N/A	25	1
US6	PRICE	530	RETURN/EXHAUST	SURFACE	6"x6"	8"x8"	195	N/A	25	1
US8	PRICE	530	RETURN/EXHAUST	SURFACE	8"x8"	10"x10"	390	N/A	25	1, 4
US10	PRICE	530	RETURN/EXHAUST	SURFACE	10"x10"	12"x12"	350	N/A	25	1, 4
US12	PRICE	530	RETURN/EXHAUST	SURFACE	12"x12"	14"x14"	600	N/A	25	1, 4
US14	PRICE	530	RETURN/EXHAUST	SURFACE	14"x14"	16"x16"	1050	N/A	25	1, 4
US16	PRICE	530	RETURN/EXHAUST	SURFACE	16"x16"	18"x18"	1200	N/A	25	1, 4
SD48.3	PRICE	SDS100 (3 SLOT)	SUPPLY	SURFACE	8" DIA	48"x5"	300	ADJUSTABLE	25	1
SD60	PRICE	SDS100 (3 SLOT)	SUPPLY	SURFACE	EXISTING (10")	60"x6"	350	ADJUSTABLE	25	1
SD72	PRICE	SDS100 (2 SLOT)	SUPPLY	SURFACE	EXISTING (12")	72"x4"	400	ADJUSTABLE	25	1
SDS48	PRICE	SDS100 (2 SLOT)	SUPPLY	SURFACE	7" DIA	48"x5"	250	ADJUSTABLE	25	1

LOUVER SCHEDULE

REMARKS:
1. COORDINATE COLOR ITH ARCHITECT.

							OVERALL DIMENSIONS			PERFORMANCE			
MARK	MANUFACTURER	MODEL	DESCRIPTION	FREE AREA RATIO	FREE REA (SQFT)	ASSOCIATED EQUIPMENT	WIDTH	HEIGHT	DEPTH	CFM	FREE AREA VELOCITY (FPM)	MAX APD (IN. W.G.)	REMARKS
L-1.1	GREENHECK	ESD-635	INTAKE	.43	1.4	EX-AHU-2	22"	22"	6"	820	550	.05	1

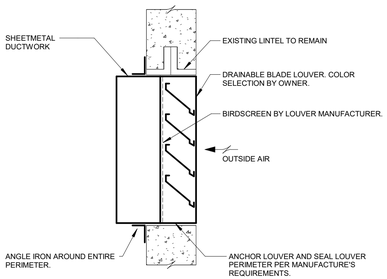

6 / M4.3 LOUVER INSTALLATION DETAIL
NTS

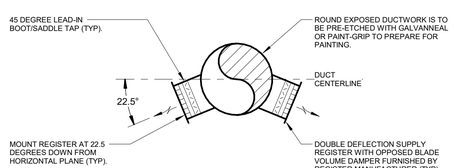

5 / M4.3 DUCT MOUNTED SUPPLY REGISTER DETAIL
NTS

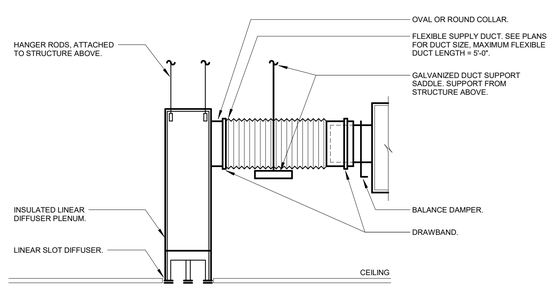

3 / M4.3 TYPICAL LINEAR DIFFUSER CONNECTION DETAIL

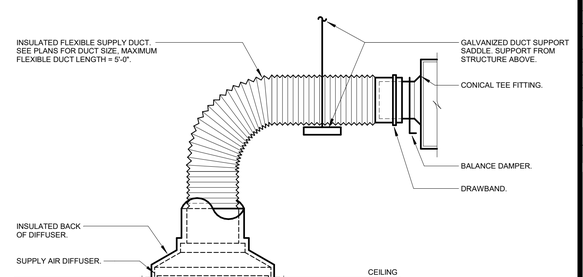

2 / M4.3 TYPICAL DUCT/DIFFUSER CONNECTION DETAIL

SoL Harris/Day architecture
Designed for People. Designed for Life.
6677 Frank Avenue NW, North Canton, OH 44720 | 330.493.3722 | www.solharrisday.com

STATE OF OHIO
ERIC L WRIGHT
78568
REGISTERED PROFESSIONAL ENGINEER

not published, all rights reserved

Renovation for:
Coshocton Port Authority - Coshocton Collaborative
538 Main St
Coshocton, OH, 43812

MARK	DATE	DESCRIPTION

PROJECT NO: 19.137
DATE: 11/10/2023

MECHANICAL SCHEDULES AND DETAILS

M4.3

ROOFTOP AIR HANDLING UNIT SCHEDULE (ALTERNATE #1)

UNIT NOTES:

1. UNIT TO BE PROVIDED UNDER ALTERNATE #1
2. FURNISH WITH FULL ECONOMIZER & EXHASUT FAN.
3. PROVIDE WITH MANUFACTURER FURNISHED CONTROLS WITH BAS INTEGRATION.
4. FURNISH WITH RETURN AIR SMOKE DETECTOR.
5. FURNISH WITH NEW ROOF CURB OR CURB ADAPTER TO INSTALL ON EXISTING RTU CURB.

				SUPPLY FAN			EXHAUST FANS			COOLING COILS - DX				CONDENSER		EFFICIENCIES		HOT WATER COIL						ELECTRICAL				
MARK	MANUFACTURER	MODEL	MIN OA	CFM	ESP (IN W.C.)	MHP / QTY	POWER EXHAUST	CFM (EA) (IN W.C.)	ESP (IN W.C.)	EDB / EWB (F)	LDB / LWB (F)	SENS MBH	TOTAL MBH	REFRIGERANT	COMP QTY	EER	IEER / SEER	GPM	EWT / LWT (°F)	OUTPUT MBH	EAT	LAT	FILTERS	VOLTS / PHASE	MCA	MOCP	DISCONNECT BY	OPERATING WEIGHT (LBS)
RTU-1	DAIKIN	DPSA052	5,000	14,000	1.7	10 / 2	5	14,000	.4	84/72	57.5 / 57	405	687	R-410A	4	10.4	16.2	69	180 / 160	681	45	90	MERV 13	480/3	130	150	MFR	6711

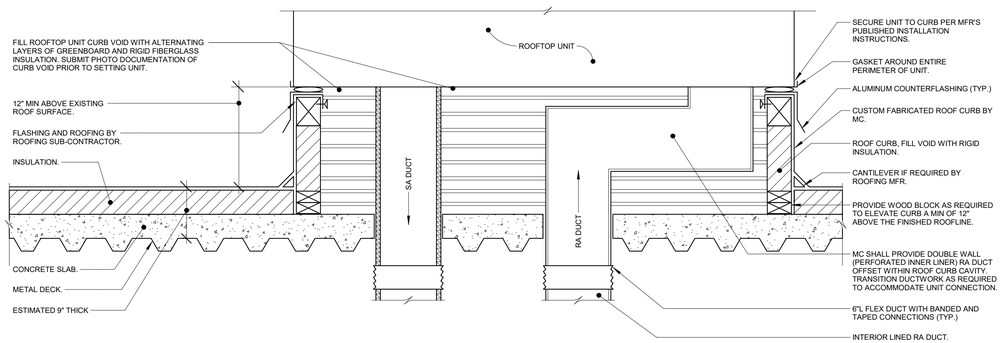

3 / M4.4 ROOFTOP UNIT CURB INSTALLATION DETAIL 1
NTS

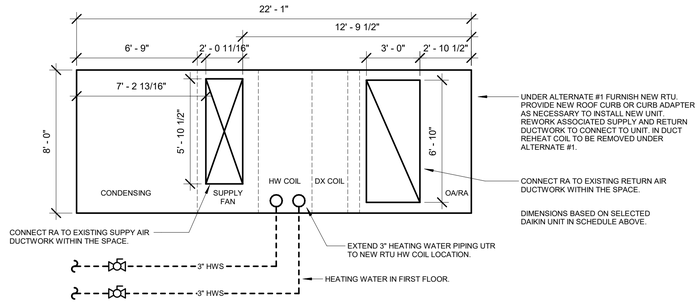

1 / M4.4 ALTERNATE #1 - RTU REVISION
1/4" = 1'-0"

BOILER SCHEDULE (ALTERNATE #2)

NOTES:

1. NEW BOILER TO BE PROVIDED UNDER ALTERNATE #2. INCLUDE ALL BOILLER CONNECTION COMPENENTS SUCH AS GAS TRAIN, TEMPERTURE LIMIT CONTROLS, AND RELIEF VALVES.
2.

MARK	MANUFACTURER	MODEL	FUEL	BOILER TYPE	GAS PRESS RANGE	INPUT MBH	OUTPUT MBH	FLUID	EWT (°F)	LWT (°F)	DESIGN FLOW (GPM)	RELIEF VALVE SET PRESS (PSI)	ELECTRICAL VOLTS/PH
B-1	BRYAN BOILERS	AB-300-W-FDG	NATURAL GAS	NON-CONDENSING 85%	7-14"	3,000	2,400	WATER	160	180	240	60	120/1

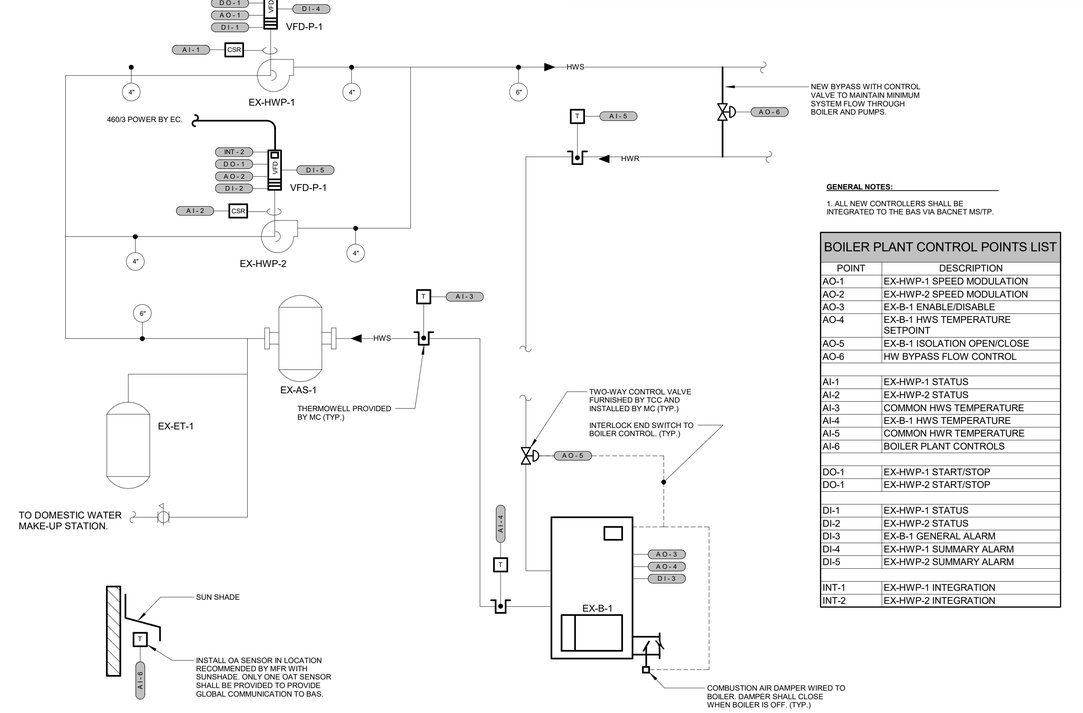

GENERAL NOTES:

1. ALL NEW CONTROLLERS SHALL BE INTEGRATED TO THE BAS V/A BACNET MS/TP.

BOILER PLANT CONTROL POINTS LIST	
POINT	DESCRIPTION
AO-1	EX-HWP-1 SPEED MODULATION
AO-2	EX-HWP-2 SPEED MODULATION
AO-3	EX-B-1 ENABLE/DISABLE
AO-4	EX-B-1 HWS TEMPERATURE SETPOINT
AO-5	EX-B-1 ISOLATION OPEN/CLOSE
AO-6	HW BYPASS FLOW CONTROL
AI-1	EX-HWP-1 STATUS
AI-2	EX-HWP-2 STATUS
AI-3	COMMON HWS TEMPERATURE
AI-4	EX-B-1 HWS TEMPERATURE
AI-5	COMMON HWR TEMPERATURE
AI-6	BOILER PLANT CONTROLS
DO-1	EX-HWP-1 START/STOP
DO-1	EX-HWP-2 START/STOP
DI-1	EX-HWP-1 STATUS
DI-2	EX-HWP-2 STATUS
DI-3	EX-B-1 GENERAL ALARM
DI-4	EX-HWP-1 SUMMARY ALARM
DI-5	EX-HWP-2 SUMMARY ALARM
INT-1	EX-HWP-1 INTEGRATION
INT-2	EX-HWP-2 INTEGRATION

4 / M4.4 BOILER PLANT CONTROLS
NTS

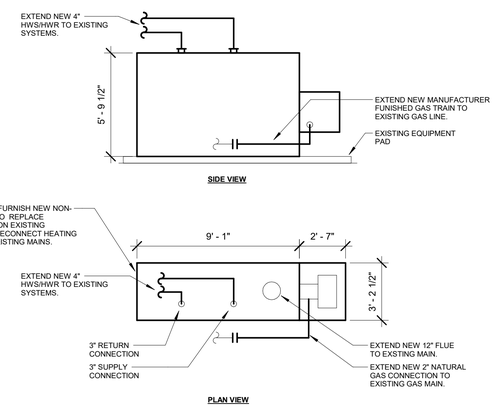

2 / M4.4 ALTERNATE #2 - BOILER REVISION
1/4" = 1'-0"

SōL Harris/Day architecture
Designed for People. Designed for Life.
6677 Frank Avenue NW, North Canton, OH 44720 | 330.493.3722 | www.solharrisday.com

STATE OF OHIO
ERIC L WRIGHT 78568
REGISTERED PROFESSIONAL ENGINEER

not published, all rights reserved

Renovation for:
Coshocton Port Authority - Coshocton Collaborative
538 Main St
Coshocton, OH, 43812

MARK	DATE	DESCRIPTION

PROJECT NO: 19.137
DATE: 11/10/2023

MECHANICAL SCHEDULES AND DETAILS

M4.4

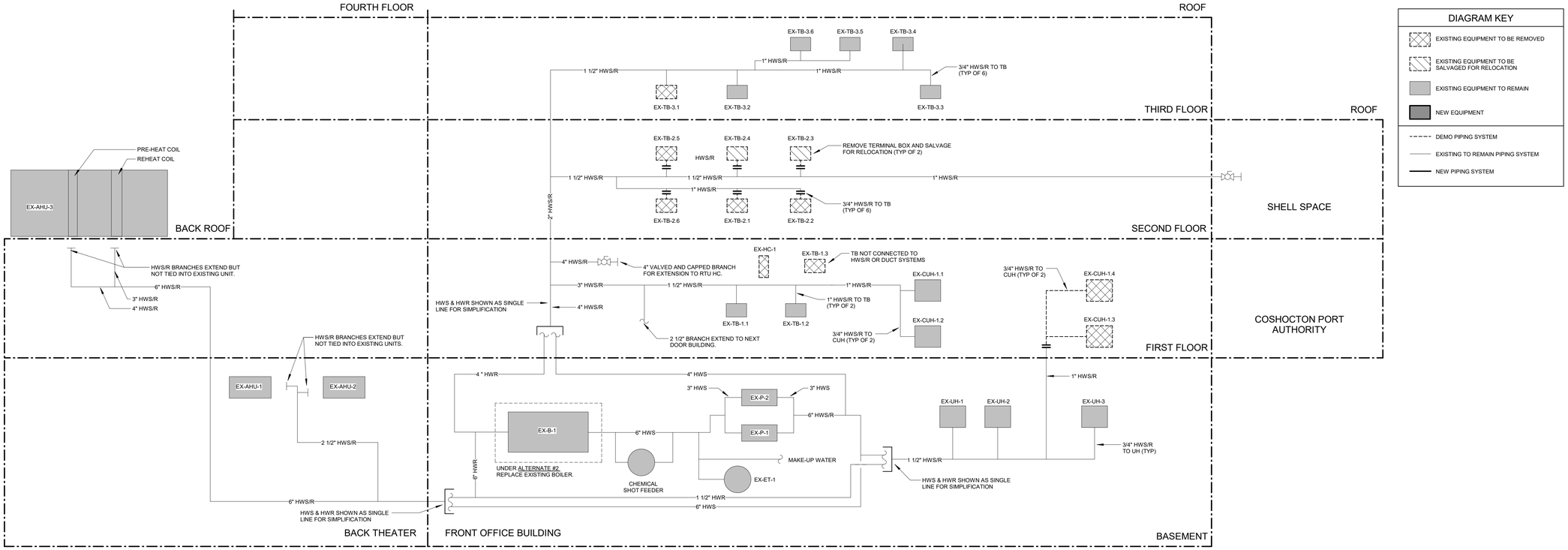

1 M5.1 **DEMOLITION HEATING WATER DIAGRAM**
12" = 1'-0"

DIAGRAM KEY

- EXISTING EQUIPMENT TO BE REMOVED
- EXISTING EQUIPMENT TO BE SALVAGED FOR RELOCATION
- EXISTING EQUIPMENT TO REMAIN
- NEW EQUIPMENT
- DEMO PIPING SYSTEM
- EXISTING TO REMAIN PIPING SYSTEM
- NEW PIPING SYSTEM

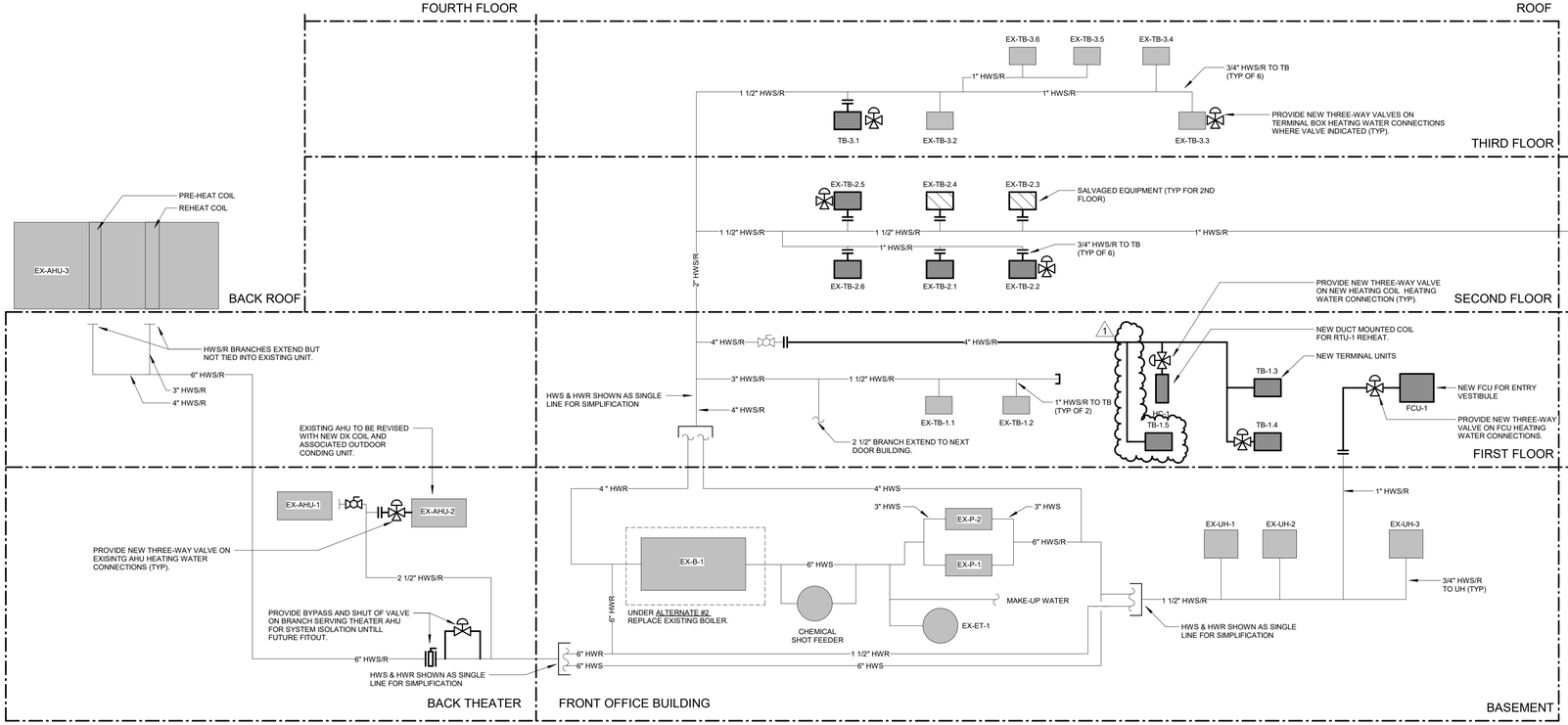

2 M5.1 **HEATING WATER DIAGRAM**
12" = 1'-0"

DIAGRAM KEY

- EXISTING EQUIPMENT TO BE REMOVED
- SALVAGED EQUIPMENT RELOCATED
- EXISTING EQUIPMENT TO REMAIN
- NEW EQUIPMENT
- DEMO PIPING SYSTEM
- EXISTING TO REMAIN PIPING SYSTEM
- NEW PIPING SYSTEM

SoL Harris/Day architecture
Designed for People. Designed for Life.
6677 Frank Avenue NW, North Canton, OH 44720 | 330.493.3722 | www.solharrisday.com

STATE OF OHIO
ERIC L WRIGHT 78568
REGISTERED PROFESSIONAL ENGINEER

not published, all rights reserved

Renovation for:
Coshocton Port Authority - Coshocton Collaborative
538 Main St
Coshocton, OH, 43812

MARK	DATE	DESCRIPTION
1	12/01/2023	ADDENDUM NO 1

PROJECT NO: 19.137
DATE: 11/10/2023

HEATING WATER DIAGRAMS

M5.1

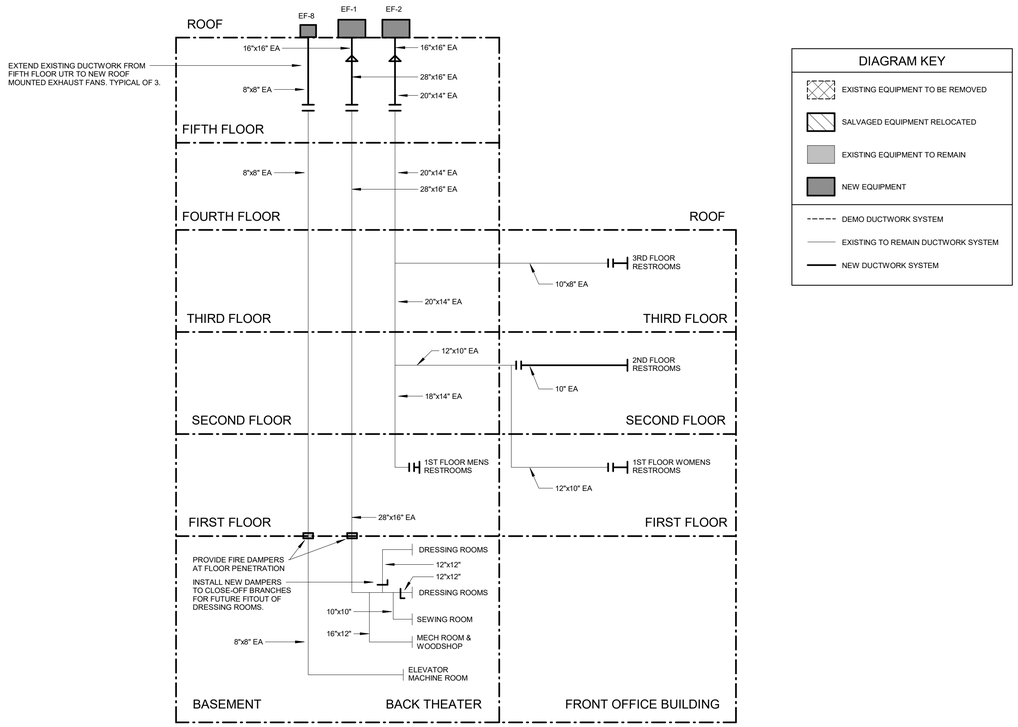

3 M5.2 **EXHAUST AIRFLOW DIAGRAM**

DIAGRAM KEY

- EXISTING EQUIPMENT TO BE REMOVED
- SALVAGED EQUIPMENT RELOCATED
- EXISTING EQUIPMENT TO REMAIN
- NEW EQUIPMENT
- DEMO DUCTWORK SYSTEM
- EXISTING TO REMAIN DUCTWORK SYSTEM
- NEW DUCTWORK SYSTEM

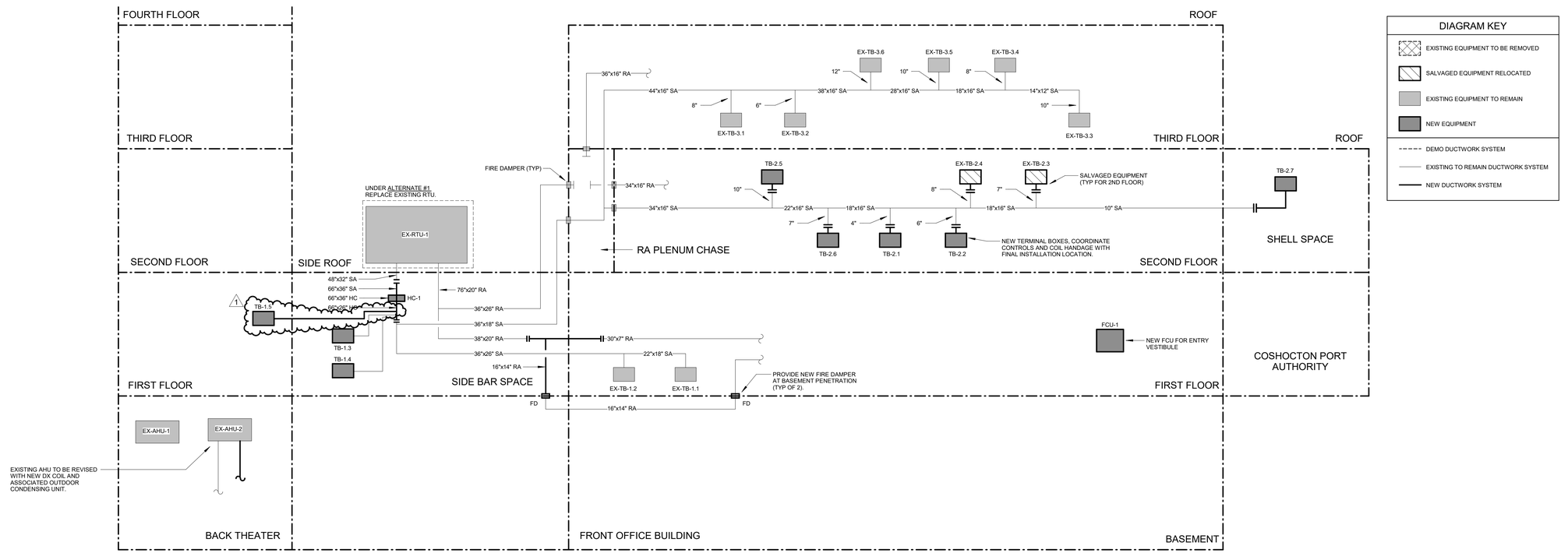

1 M5.2 **DUCTWORK DIAGRAM**
12" = 1'-0"

DIAGRAM KEY

- EXISTING EQUIPMENT TO BE REMOVED
- SALVAGED EQUIPMENT RELOCATED
- EXISTING EQUIPMENT TO REMAIN
- NEW EQUIPMENT
- DEMO DUCTWORK SYSTEM
- EXISTING TO REMAIN DUCTWORK SYSTEM
- NEW DUCTWORK SYSTEM

SOL Harris/Day architecture
Designed for People. Designed for Life.
6677 Frank Avenue NW, North Canton, OH 44720 | 330.493.3722 | www.solharrisday.com

STATE OF OHIO
ERIC L WRIGHT
78568
REGISTERED PROFESSIONAL ENGINEER

not published, all rights reserved

Renovation for:
Coshocton Port Authority - Coshocton Collaborative
538 Main St
Coshocton, OH, 43812

MARK	DATE	DESCRIPTION
1	12/01/2023	ADDENDUM NO 1

PROJECT NO: 19.137
DATE: 11/10/2023

DUCTWORK DIAGRAMS

M5.2

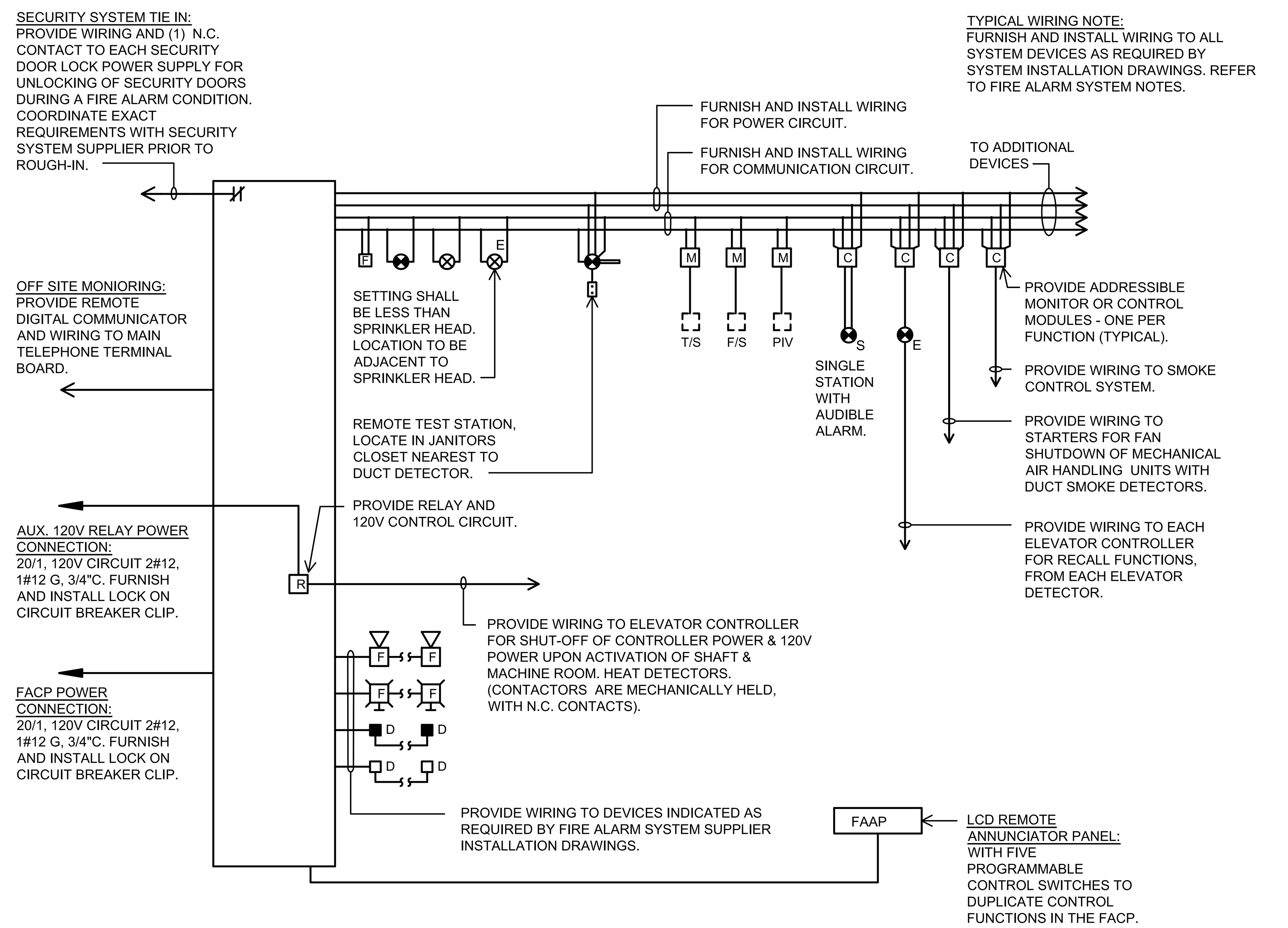

TYPICAL FIRE ALARM SYSTEM WIRING DIAGRAM

SCALE: NONE

FIRE ALARM WIRING NOTES:

1. THIS RISER REPRESENTS A TYPICAL SYSTEM AND IS NOT INTENDED FOR INSTALLATION. SYSTEM SUPPLIER SHALL PROVIDE INSTALLATION DRAWINGS AND WIRING DIAGRAMS. EXACT SYSTEM REQUIREMENTS SHALL BE COORDINATED WITH THE SYSTEM SUPPLIER.
2. SYSTEM SUPPLIER SHALL SUPERVISE INSTALLATION, PROGRAM AND TEST SYSTEM, AND INSTRUCT OWNER ON SYSTEM OPERATION.
3. ALL FIRE ALARM WIRING SHALL BE IN 3/4" CONDUIT, MINIMUM. ALL WIRING SHALL BE VERIFIED WITH THE SYSTEM SUPPLIER PRIOR TO BID.
4. PROVIDE ADDITIONAL ADDRESSABLE MONITOR AND CONTROL MODULES AS RECOMMENDED BY THE SYSTEM SUPPLIER.
5. ALL CONTROL CABINETS SHALL BE GROUNDED PER N.E.C. REQUIREMENTS AND PER SPECIFICATIONS.
6. COORDINATE CITY TIE-IN REQUIREMENTS WITH LOCAL AUTHORITY.
7. REFER TO DRAWINGS FOR DEVICE QUANTITY AND LOCATIONS.

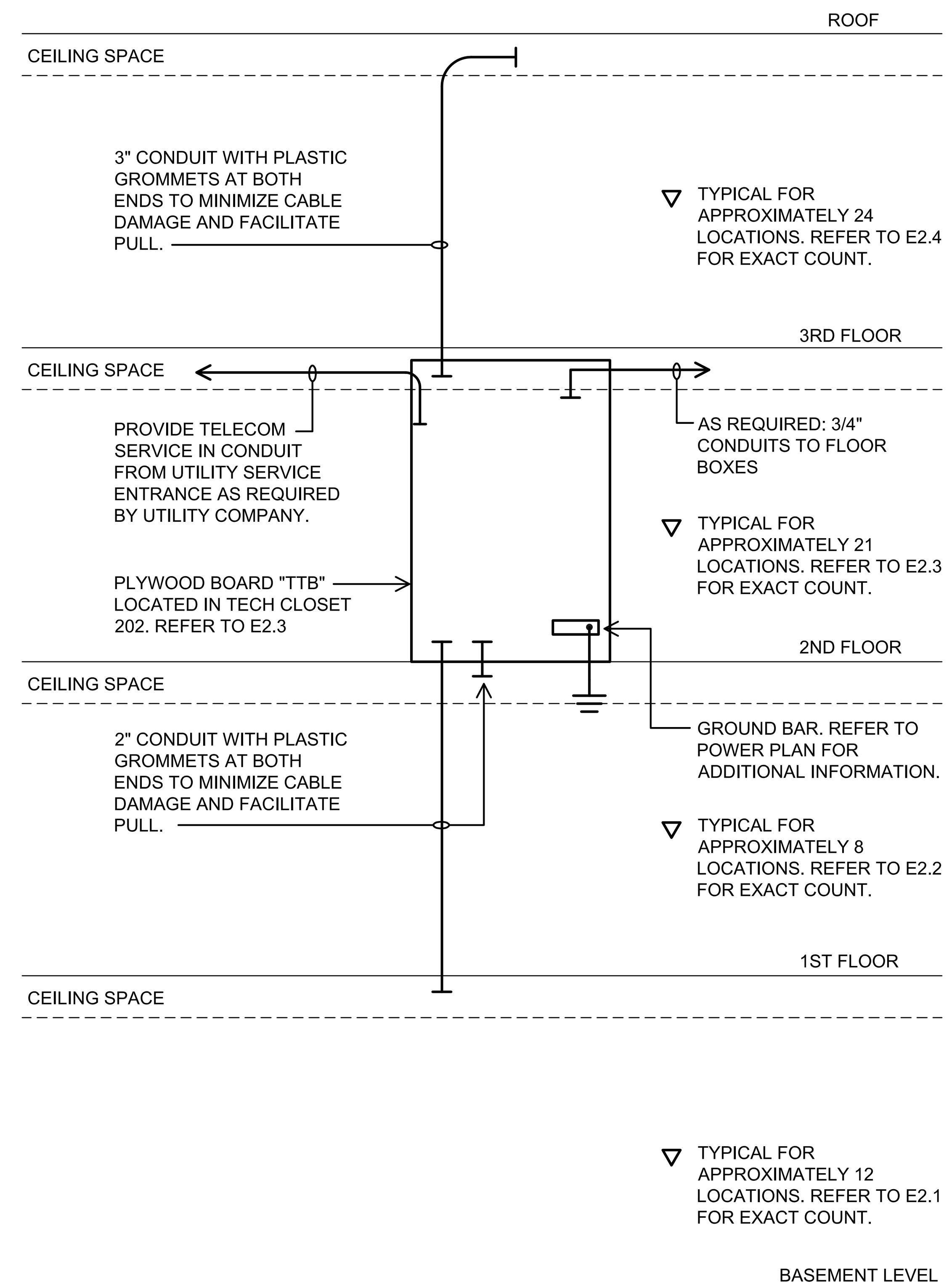

DATA SYSTEM CABLE ROUTING DETAIL

SCALE: NONE

NOTES:

1. ALL DATA WIRING SHALL BE FURNISHED AND INSTALLED BY EC, INCLUDING DATA PORTS, TERMINATIONS, FACEPLATES, ETC. REFER TO SYMBOL LEGEND AND POWER / COMMUNICATIONS PLANS FOR ADDITIONAL INFORMATION.
2. EC IS TO TEST EACH CABLE INSTALLED TO ENSURE LENGTH, WIREMAP, ATTENUATION, NEXT, DC LOOP RESISTANCE, AND RETURN LOSS.
3. PROVIDE AN EXCESS OF EACH CABLE (10 FEET) AT THE TTB FOR CONNECTION TO RACK SWITCH BY OTHERS.
4. EACH CABLE SHALL BE TAGGED WITH CORRESPONDING ROOM AND PORT NUMBER.
5. EACH ROOM WALL PLATE SHALL BE COMPREHENSIVELY LABELED WITH TYPE WRITTEN ID TAG.
6. VERTICAL CONDUIT PATHS DEPICTED IN THIS DETAIL, TO FACILITATE WIRING TO "TTB", ARE NOT LOCATED ON THE ELECTRICAL DRAWINGS. EC SHALL VERIFY DESIRED CONDUIT PATHS WITH GC ON SITE PRIOR TO ROUGH IN.

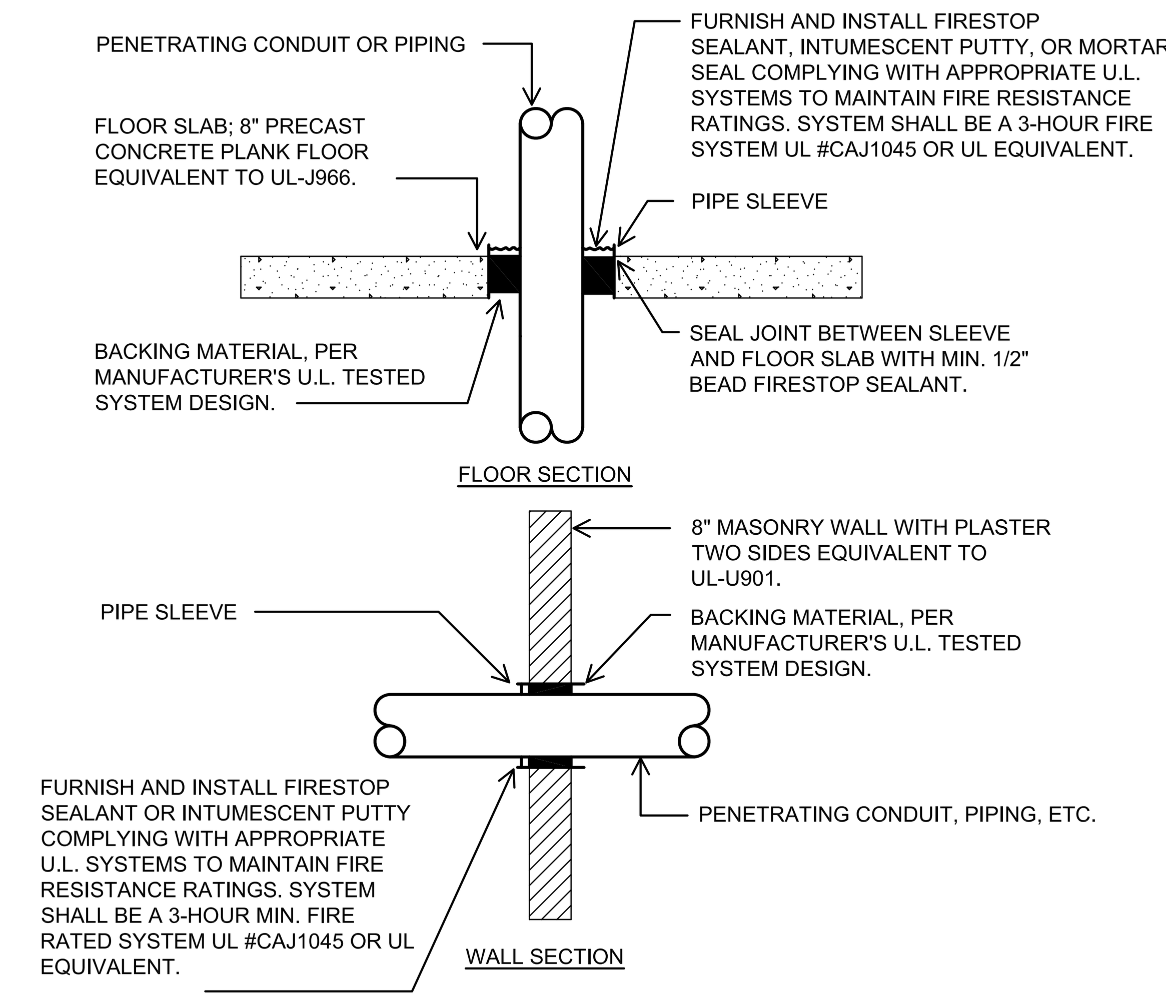

NOTES:

1. WHERE CONDUIT, PIPING, CABLES AND OTHER COMPONENTS PASS THROUGH FIRE OR SMOKE RATED WALLS OR FLOORS, PROVIDE U.L. CLASSIFIED FIRE-SEAL ASSEMBLIES WITH RATINGS EQUAL TO OR GREATER THAN THE TIME RATING OF THE CONSTRUCTION BEING PENETRATED, WITH APPROPRIATE MATERIALS AND SYSTEMS THAT COMPLY WITH APPLICABLE CODES AND THAT HAVE BEEN TESTED IN ACCORDANCE WITH U.L. 1479 AND ASTM E814.
2. GROUT, MORTAR OR GYPSUM BASED PRODUCTS SHALL NOT BE INSTALLED IN LIEU OF FIRESTOPPING MATERIALS MEETING U.L. FIRESTOP REQUIREMENTS.
3. FOR SLEEVED PENETRATIONS, FIRESTOP ANNULAR SPACE, IF ANY, BETWEEN SLEEVE AND ADJACENT CONSTRUCTION TO MEET U.L. SYSTEM REQUIREMENTS. SEE NOTE 2 ABOVE.
4. THIS CONTRACTOR SHALL FIRESTOP ALL MISCELLANEOUS OPENINGS IN FIRE-RATED CONSTRUCTION RESULTING FROM HIS WORK.
5. THE CONTRACTOR SHALL PROVIDE SUBMITTAL DRAWINGS TO ENGINEER, INCLUDING U.L. RATED SYSTEM NUMBER AND DETAIL FOR EACH TYPE OF PENETRATION AND CONFIGURATION. ALL FIRESTOPPING MATERIALS SHALL BE INSTALLED IN STRICT ACCORDANCE WITH MANUFACTURER'S SHOP DRAWINGS IN ORDER TO ACHIEVE PROPER U.L. RATING.
6. SLEEVES USED FOR CABLE RISERS THROUGH FLOORS OR WALLS SHALL BE INSTALLED PER THE ABOVE FLOOR OR WALL SECTIONS. IN ADDITION, FIRESTOP MATERIAL SHALL BE PROVIDED INSIDE SLEEVE AFTER CABLES ARE COMPLETELY INSTALLED.
7. OTHER TYPES OF FIRE-SEAL ASSEMBLIES SUCH AS FIRESTOP DEVICES AND INTUMESCENT SLEEVES MEETING U.L. FIRE RATINGS SHALL BE ACCEPTABLE CONTINGENT UPON SHOP DRAWING APPROVAL BY THE ENGINEER.
8. ELECTRICAL CONDUIT: NOMINAL 4" DIAMETER OR SMALLER EMT OR NOMINAL 6" DIAMETER OR SMALLER RGS. THE ANNULAR SPACE SHALL BE MIN. 5/8" TO MAX. 3-1/4".
9. STEEL PIPE: NOMINAL 10" DIAMETER (OR SMALLER) SCHEDULE 5 (OR HEAVIER) STEEL PIPE. THE ANNULAR SPACE SHALL BE MIN. 5/8" TO MAX. 2-3/4".
10. IRON PIPE: NOMINAL 2" DIAMETER (OR SMALLER) CAST OR DUCTILE IRON PIPE. THE ANNULAR SPACE SHALL BE MIN. 5/8" TO MAX. 2-3/4".

TYPICAL FIRESTOPPING INSTALLATION DETAIL

SCALE: NONE

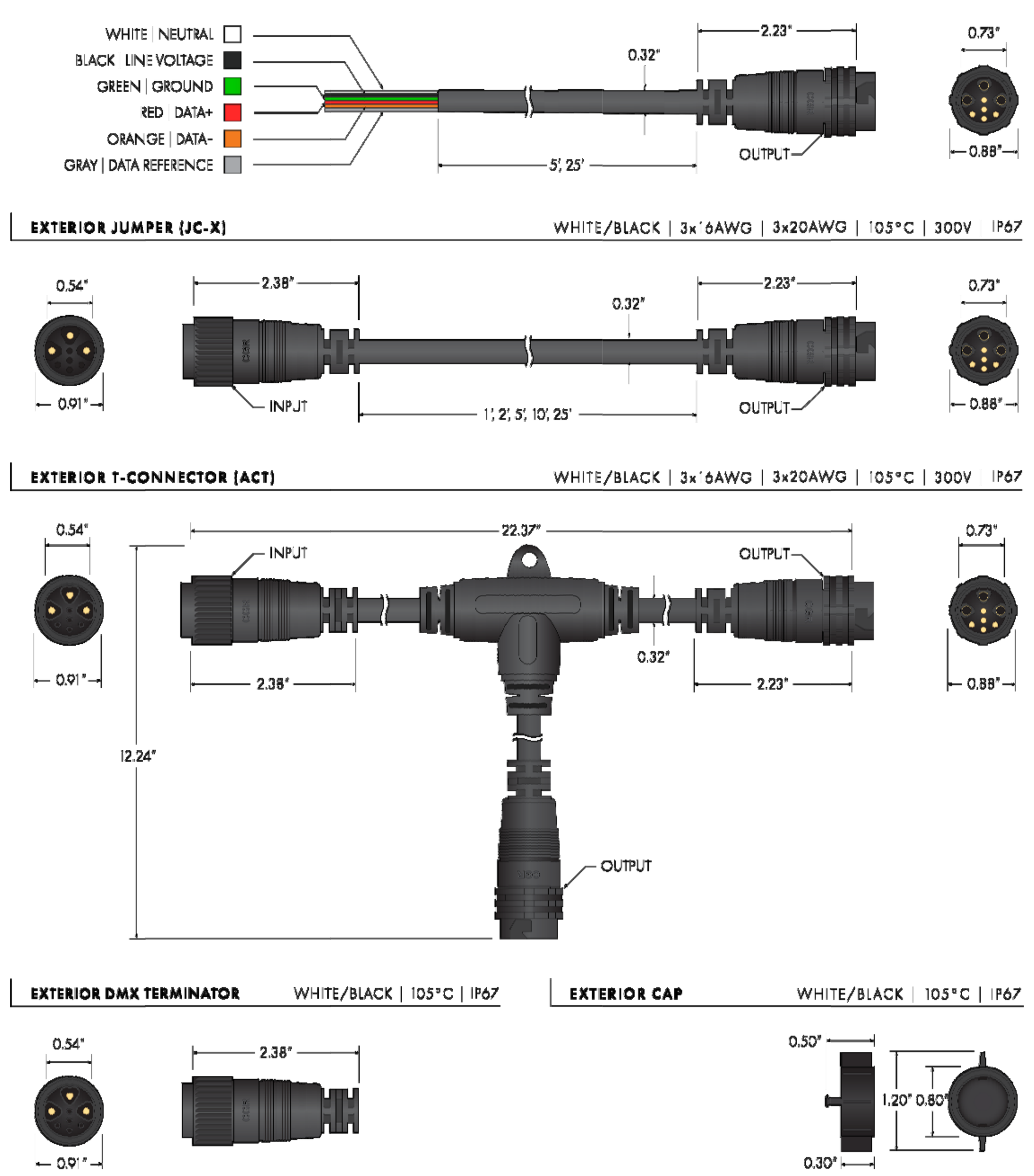

FIRE ALARM SYSTEM NOTE:
GC SHALL SUBMIT FIRE ALARM STAMPED FIRE ALARM DRAWINGS UNDER A SEPARATE PERMIT. THE SYSTEM MANUFACTURER SHALL SUBMIT DEVICES, WIRING, BATTERY CALCULATIONS, VOLTAGE DROP CALCULATIONS, ETC. THE FIRE ALARM SYSTEM DESIGNER SHALL BE THE DESIGNER OF RECORD FOR THE FIRE ALARM SYSTEM. ADDITIONAL DEVICES REQUIRED TO MEET CODE SHALL BE AT NO ADDITIONAL COST TO THE OWNER.

NOTE: THE DEVICE LOCATIONS SHOWN ON THE ELECTRICAL SYSTEM DRAWINGS ARE FOR REFERENCE ONLY AND IT IS THE CERTIFIED FIRE ALARM DESIGNER THAT SHALL SHOW EXACT LOCATIONS REQUIRED TO MEET ALL CODES.
NOTE: LOCATION OF ALL DEVICES MUST BE COORDINATED IN THE FIELD WITH MECHANICAL GRILLES AND DIFFUSERS, LIGHT FIXTURES, ETC. ANY CONFLICTS MUST BE BROUGHT TO THE ATTENTION OF THE OWNER TO REVIEW POSSIBLE ALTERNATE LOCATIONS.

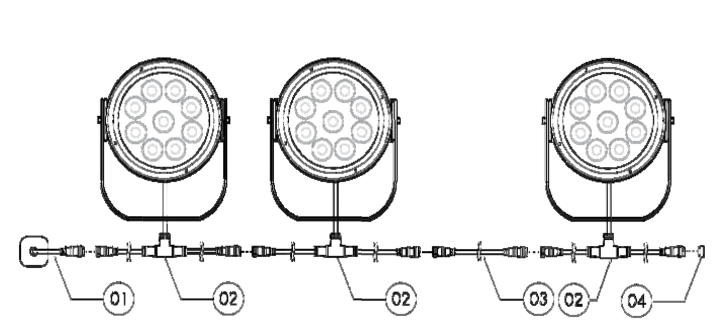

(01) LEADER CABLE (LC-5) MUST ORDER SEPARATELY, ONE REQUIRED FROM J-BOX TO FIRST FIXTURE RUN
(02) T-CONNECTOR (ACT): ONE SUPPLIED FOR EACH FIXTURE ORDERED WITH PLUG & PLAY OPTION (PNP). ALLOWS FOR PLUG & PLAY INSTALLATION.
(03) JUMPER CABLE (JC-X): OPTIONAL. ALLOWS FOR ADDITIONAL SPACING BETWEEN FIXTURES. AVAILABLE LENGTHS 1', 2', 5', 10', 25'.
(04) CAP/ATM: SUPPLIED. MUST BE INSTALLED AT THE END OF EACH FIXTURE RUN.

OUTDOOR FACADE DMX CABLING

SCALE: NONE

STADELMAN ASSOCIATES INC.
© COPYRIGHT 2023 - ALL RIGHTS RESERVED
8614 HARTMAN ROAD
WADSWORTH, OH 44281
PH: 330-926-2600 FAX: 330-926-4531

SōL Harris/Day architecture
Designed for People. Designed for Life.
6677 Frank Avenue NW, North Canton, OH 44720 | 330.493.3722 | www.solharrisday.com

BID / PERMIT SET

STATE OF OHIO · CHARLES S. PARSONS · E-72649 · REGISTERED · PROFESSIONAL ENGINEER · 11/15/23

not published; all rights reserved

Renovation for:
Coshocton Port Authority - Coshocton Collaborative
538 Main St
Coshocton, OH, 43812

MARK	DATE	DESCRIPTION
1	12/01/2023	ADDENDUM NO 1

PROJECT NO: 19.137
DATE: 11/15/2023

ELECTRICAL DETAILS

E1.3

S:\Shared\Active\23gv013-Coshocton Port Authority - Collaboration Renovation CD\23gv013 E1.3 ELECTRICAL DETAILS.dwg [24x36] December 03, 2023 - 8:47pm

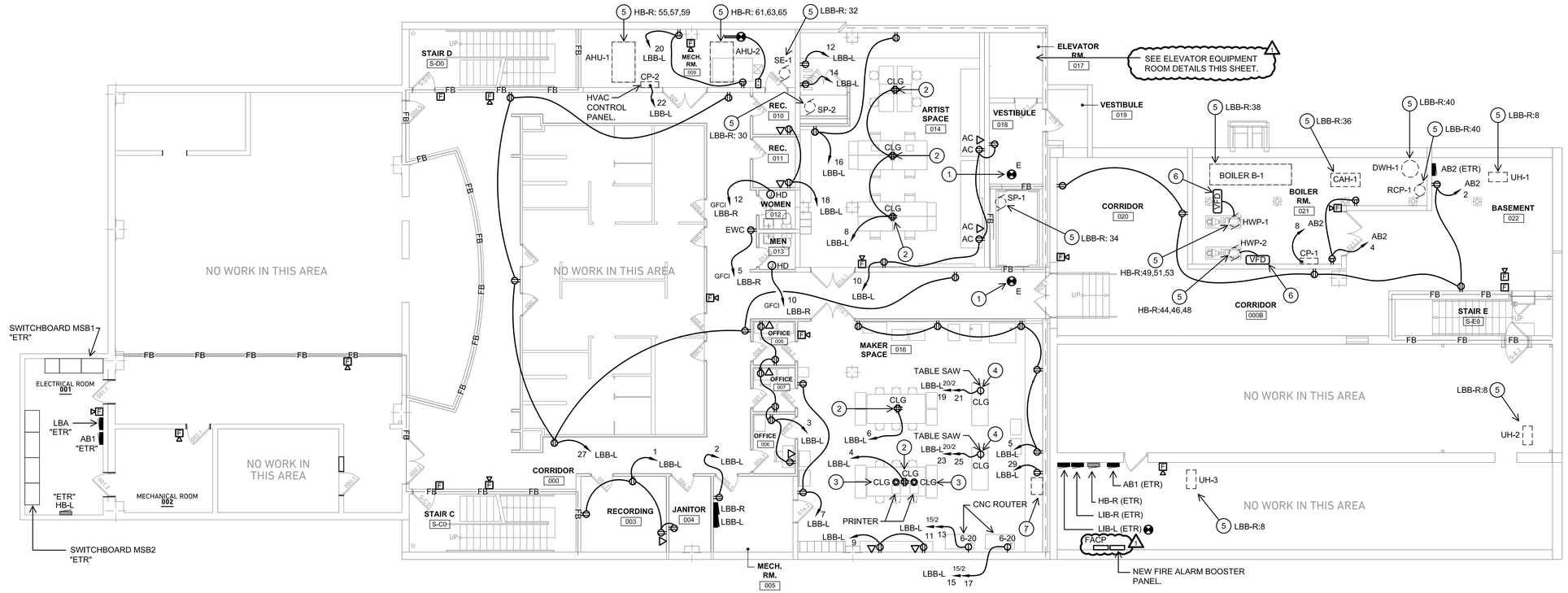

BASEMENT POWER AND COMMUNICATIONS FLOOR PLAN

SCALE: 1/8" = 1'-0"

NORTH

GRAPHIC SCALE: 1/8" = 1' - 0

2' 0 2' 4' 6' 8' 12' 16' 24' 32' 40'

FIRE WALL/ FIRE BARRIER GENERAL NOTES:

1. FIRE WALLS AND FIRE BARRIERS ARE INDICATED FOR REFERENCE ONLY. EC SHALL VERIFY WITH ARCHITECTURAL CODE PLANS PRIOR TO ROUGH IN. ARCHITECTURAL DRAWINGS SHALL TAKE PRECEDENCE IN CASES OF DISCREPANCIES.
2. REFER TO DRAWINGS E1.1 AND E1.3 FOR ADDITIONAL INFORMATION.

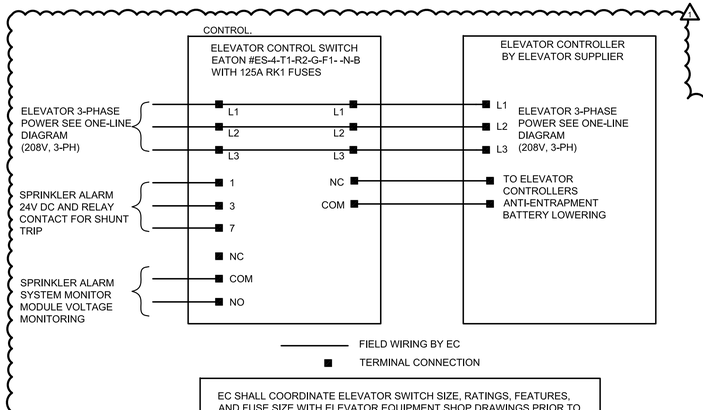

EC SHALL COORDINATE ELEVATOR SWITCH SIZE, RATINGS, FEATURES, AND FUSE SIZE WITH ELEVATOR EQUIPMENT SHOP DRAWINGS PRIOR TO ORDERING. EC SHALL COORDINATE ALL REQUIREMENTS WITH ELEVATOR SUPPLIER AND SPRINKLER ALARM SYSTEM VENDOR.

ELEVATOR SWITCH WIRING DIAGRAM

SCALE: NONE

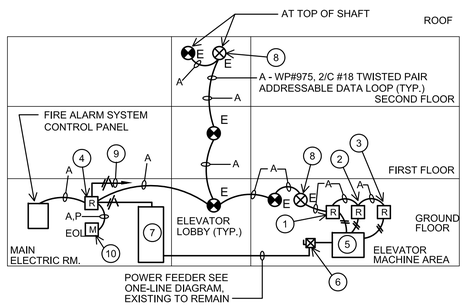

ELEVATOR RECALL/POWER SHUTDOWN OPERATION

SCALE: NONE

POWER AND COMMUNICATIONS KEY NOTES:

1. EC TO PROVIDE NEW SMOKE DETECTOR IN ELEVATOR LOBBY.
2. PROVIDE CEILING MOUNTED RETRACTABLE CORD REEL FOR 120 VOLT POWER. 20 FOOT CORD, (2) 20A DUPLEX RECEPTACLES, GFCI MODULE. HUBBELL #HBLI25123GF220M1 OR EQUIVALENT AS APPROVED BY EOR. PROVIDE RECEPTACLE CEILING MOUNTED NEAR CORD REEL AS REQUIRED TO PLUG CORD REEL IN.
3. PROVIDE CEILING MOUNTED RETRACTABLE CORD REEL FOR DATA CONNECTION. CAT6 WITH RJ45 CABLE END, 25 FOOT REACH. HUNTER SPRING AMETEK #301172-1 WITH CEILING MOUNT ACCESSORY OR EQUIVALENT AS APPROVED BY EOR. PROVIDE DATA OUTLET CEILING MOUNTED NEAR CORD REEL AS REQUIRED TO PLUG CORD REEL IN.
4. PROVIDE CEILING MOUNTED RETRACTABLE CORD REEL FOR 208 VOLT SINGLE PHASE POWER. 20 FOOT CORD, (1) NEMA 6-15 RECEPTACLE. HUBBELL #HBLI25123 WITH FIELD INSTALLED RECEPTACLE, OR EQUIVALENT AS APPROVED BY EOR. UNIT IS HARD WIRED IN CEILING SPACE.
5. EXISTING MECHANICAL OR PLUMBING EQUIPMENT TO REMAIN. VERIFY EXISTING CIRCUIT INTEGRITY AND REPORT ANY PROBLEMS TO THE ARCHITECT FOR RESOLUTION. HOMERUN PANEL AND CIRCUIT NUMBER ARE INDICATED. REFER TO PANEL SCHEDULE FOR ADDITIONAL INFORMATION.
6. NEW VARIABLE FREQUENCY DRIVE TO BE PROVIDED BY TEMP CONTROL CONTRACTOR, INSTALLED WIRED BY EC. REWORK EXISTING BRANCH CIRCUIT AS REQUIRED.
7. DUST COLLECTOR, 120V, 20 AMP

ELEVATOR WIRING NOTES:

1. PRIMARY ELEVATOR CAPTURE RELAY
2. ALTERNATE FLOOR ELEVATOR CAPTURE RELAY
3. SECOND STAGE ELEVATOR CAPTURE RELAY (FIREMAN'S HAT)
4. ELEVATOR POWER SHUTDOWN CONTROL RELAY (POWER SHUTDOWN PRIOR TO SPRINKLER ACTIVATION)
5. ELEVATOR CONTROLLER, EXISTING TO REMAIN
6. **ELEVATOR CONTROLLER POWER DISCONNECT SWITCH. SEE ONE-LINE DIAGRAM AND ELEVATOR POWER SHUTDOWN DETAIL FOR DETAILS.**
7. **MAIN DISTRIBUTION PANEL WITH 80/3 CIRCUIT BREAKER**
8. HEAT DETECTOR SET AT LOWER TEMPERATURE THAN SPRINKLER HEAD FOR ELEVATOR POWER SHUTDOWN OPERATION. LOCATE WITHIN 2' OF SPRINKLER HEAD.
9. 120V POWER FOR ELEVATOR POWER SHUTDOWN CONTACTOR CONTROL CIRCUIT ROUTED THROUGH ADDRESSABLE RELAY.
10. FIRE ALARM SYSTEM MONITOR MODULE FOR SUPERVISION OF ELEVATOR POWER SHUTDOWN CONTROL POWER.

GENERAL POWER PLAN NOTES:

1. COORDINATE LOCATIONS OF RECEPTACLES AND OTHER WALL MOUNTED DEVICES WITH THE ARCHITECTURAL WALL ELEVATIONS AND FINISHES.
2. COORDINATE LOCATIONS OF MECHANICAL EQUIPMENT WITH MC. ALL DISCONNECTS AND ELECTRICAL EQUIPMENT SHALL BE MOUNTED IN AN ACCESSIBLE LOCATION WITH PROPER WORKING SPACE CLEARANCES PER THE NEC.
3. ALL FEEDER RUNS SHOWN ARE DIAGRAMMATIC. EC SHALL FIELD DETERMINE ACTUAL FEEDER RUNS AND PROVIDE PULL AND SPLICE BOXES PER NEC REQUIREMENTS AS REQUIRED TO COMPLETE THE RUN.
4. IF REQUIRED BY NEW WALL RESURFACING, OR IF SPECIFICALLY INDICATED, EC SHALL SPLICE/EXTEND EXISTING FIRE ALARM WIRING TO NEW DEVICE LOCATIONS. EC SHALL COORDINATE ALL FIRE ALARM SYSTEM REVISIONS WITH SYSTEM BASE BUILDING VENDOR AND INCLUDE ALL REQUIREMENTS WITHIN BID SUBMITTAL.
5. VERIFY ANY EXTERIOR WALLS BEING FURRED OUT AND PROVIDE SHALLOW BOXES WHERE REQUIRED FOR FLUSH INSTALLATION OF OUTLETS AND RECEPTACLES. NO CONDUIT, RECEPTACLES, OUTLETS, ETC. SHALL BE SURFACE MOUNTED UNLESS APPROVED BY THE ARCHITECT AND OWNER.

DATA INSTALLATION SCHEDULE

NUMBER OF DATA OR PHONE OUTLETS / CABLES INDICATED AT EACH OUTLET LOCATION.	MINIMUM SIZE OF EMT CONDUIT REQUIRED. ROUTE CONDUIT/CABLE TO TTB LOCATED ON SECOND FLOOR IN IT TECH ROOM 202.
1-3	3/4" CONDUIT
3-6	1" CONDUIT
6-9	1-1/4" CONDUIT

STADELMAN ASSOCIATES INC.
© COPYRIGHT 2023 - ALL RIGHTS RESERVED
8614 HARTMAN ROAD
WADSWORTH, OH 44281
PH: 330-926-2600 FAX: 330-926-4531

SōL Harris/Day architecture
Designed for People Designed for Life.
6677 Frank Avenue NW, North Canton, OH 44720 | 330.493.3722 | www.solharrisday.com

BID / PERMIT SET

STATE OF OHIO · CHARLES S PARSONS E-72499 · PROFESSIONAL ENGINEER · 12/15/23

not published; all rights reserved

Renovation for:
Coshocton Port Authority - Coshocton Collaborative
538 Main St
Coshocton, OH, 43812

MARK	DATE	DESCRIPTION
1	12/01/2023	ADDENDUM NO 1

PROJECT NO: 19.137
DATE: 11/15/2023

BASEMENT POWER AND COMMUNICATIONS FLOOR PLAN

E2.1

S:\Shared\Active\23gy013-Coshocton Port Authority - Collaboration Renovation CD\23gy013 E2.1 Basement Pwr and Comm Plan.dwg [24x36] December 03, 2023 - 8:46pm

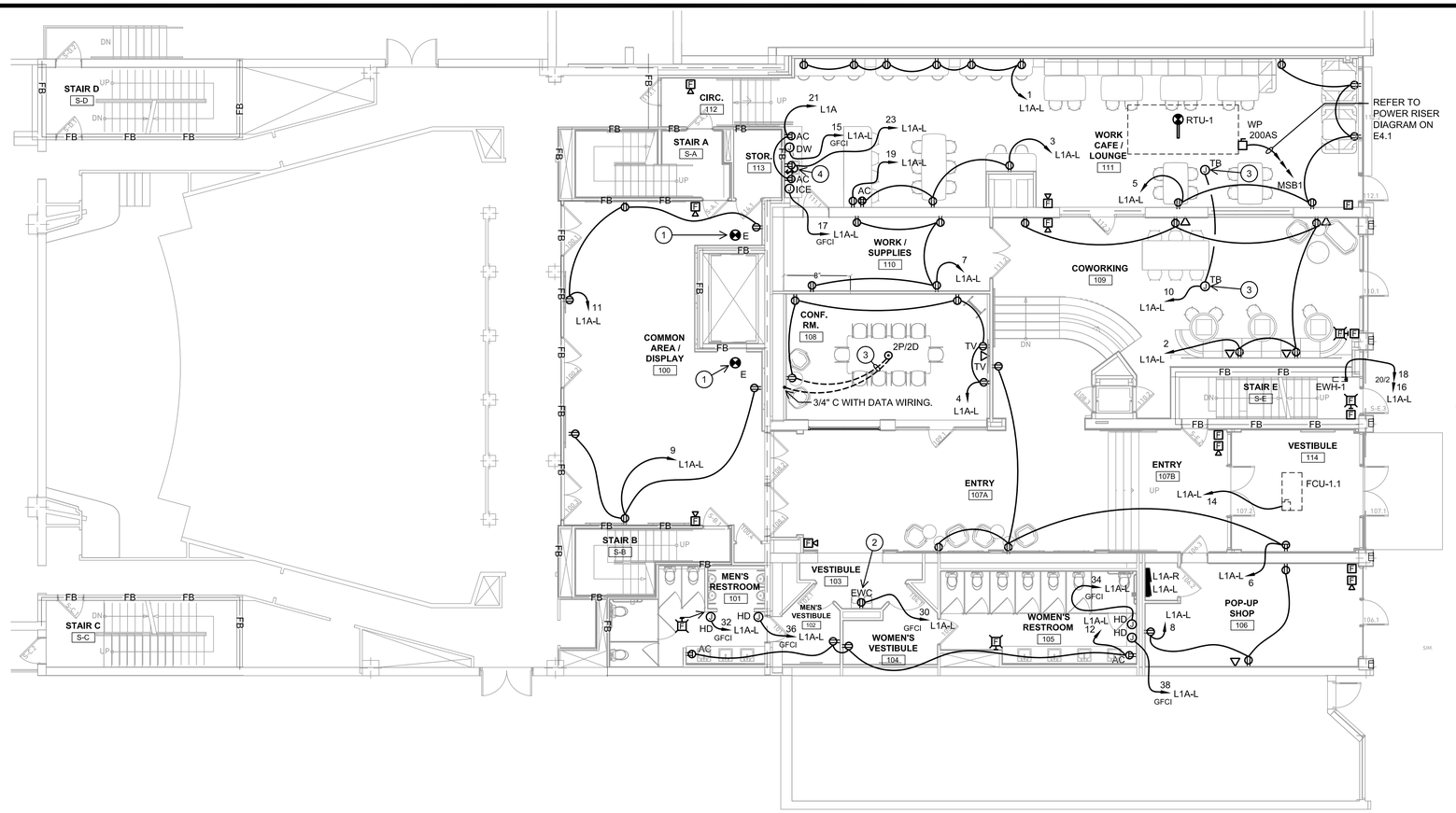

FIRST FLOOR POWER AND COMMUNICATIONS PLAN

SCALE: 1/8" = 1'-0"

NORTH

GRAPHIC SCALE: 1/8" = 1' - 0

2' 0 2' 4' 6' 8' 12' 16' 24' 32' 40'

FIRE WALL/ FIRE BARRIER GENERAL NOTES:

1. FIRE WALLS AND FIRE BARRIERS ARE INDICATED FOR REFERENCE ONLY. EC SHALL VERIFY WITH ARCHITECTURAL CODE PLANS PRIOR TO ROUGH IN. ARCHITECTURAL DRAWINGS SHALL TAKE PRECEDENCE IN CASES OF DISCREPANCIES.
2. REFER TO DRAWINGS E1.1 AND E1.3 FOR ADDITIONAL INFORMATION.

FLOOR BOX SYMBOL LEGEND

SYMBOL	DESCRIPTION
2P/2D ●	RECESSED FLUSH FLOOR POKE THROUGH REQUIRES 6" CORE HOLE. EC SHALL XRAY THE FLOOR AND VERIFY CEILING SPACE BELOW WITH OWNER PRIOR TO CORE DRILL. 2P/2D = PROVIDE (2) 20 AMP DUPLEX POWER OUTLET AND (2) DATA PORTS. HUBBELL SYSTEM ONE FIRE RATED POKE-THROUGH (FRPT) #S1R6PTFIT WITH DEVICE PLATES AS REQUIRED. PROVIDE BLACK POWDER COAT COVER.

POWER AND COMMUNICATIONS KEY NOTES:

1. EC TO PROVIDE NEW SMOKE DETECTOR IN ELEVATOR LOBBY.
2. PROVIDE POWER AS REQUIRED FOR ELECTRIC WATER COOLER. COORDINATE EXACT MOUNTING HEIGHT AND LOCATION WITH MFGR INSTALLATION INSTRUCTIONS PRIOR TO ROUGH IN.
3. PROVIDE 120 VOLT IN CEILING SPACE FOR HVAC "TB" BOX CONTROL POWER. LOCATE AS DIRECTED BY MC ON SITE.
4. PROVIDE GFCI RECEPTACLE UNDER COUNTER FOR GARBAGE DISPOSAL. PROVIDE SWITCH ABOVE COUNTER FOR CONTROL OF GARBAGE DISPOSAL. IF SWITCH IS NEAR A RECEPTACLE, BOTH SHALL BE IN A COMMON BACKBOX WITH COMMON FACEPLATE.

DATA INSTALLATION SCHEDULE

NUMBER OF DATA OR PHONE OUTLETS / CABLES INDICATED AT EACH OUTLET LOCATION.	MINIMUM SIZE OF EMT CONDUIT REQUIRED. ROUTE CONDUIT/CABLE TO TTB LOCATED ON SECOND FLOOR IN IT TECH ROOM 202.
1-3	3/4" CONDUIT
3-6	1" CONDUIT
6-9	1-1/4" CONDUIT

GENERAL POWER PLAN NOTES:

1. COORDINATE LOCATIONS OF RECEPTACLES AND OTHER WALL MOUNTED DEVICES WITH THE ARCHITECTURAL WALL ELEVATIONS AND FINISHES.
2. COORDINATE LOCATIONS OF MECHANICAL EQUIPMENT WITH MC. ALL DISCONNECTS AND ELECTRICAL EQUIPMENT SHALL BE MOUNTED IN AN ACCESSIBLE LOCATION WITH PROPER WORKING SPACE CLEARANCES PER THE NEC.
3. ALL FEEDER RUNS SHOWN ARE DIAGRAMMATIC. EC SHALL FIELD DETERMINE ACTUAL FEEDER RUNS AND PROVIDE PULL AND SPLICE BOXES PER NEC REQUIREMENTS AS REQUIRED TO COMPLETE THE RUN.
4. IF REQUIRED BY NEW WALL RESURFACING, OR IF SPECIFICALLY INDICATED, EC SHALL SPLICE/EXTEND EXISTING FIRE ALARM WIRING TO NEW DEVICE LOCATIONS. EC SHALL COORDINATE ALL FIRE ALARM SYSTEM REVISIONS WITH SYSTEM BASE BUILDING VENDOR AND INCLUDE ALL REQUIREMENTS WITHIN BID SUBMITTAL.
5. VERIFY ANY EXTERIOR WALLS BEING FURRED OUT AND PROVIDE SHALLOW BOXES WHERE REQUIRED FOR FLUSH INSTALLATION OF OUTLETS AND RECEPTACLES. NO CONDUIT, RECEPTACLES, OUTLETS, ETC. SHALL BE SURFACE MOUNTED UNLESS APPROVED BY THE ARCHITECT AND OWNER.

STADELMAN ASSOCIATES INC.

© COPYRIGHT 2023 - ALL RIGHTS RESERVED

8614 HARTMAN ROAD
WADSWORTH, OH 44281
PH: 330-926-2600 FAX: 330-926-4531

SōL Harris/Day architecture
Designed for People Designed for Life.
6677 Frank Avenue NW, North Canton, OH 44720 | 330.493.3722 | www.solharrisday.com

BID / PERMIT SET

STATE OF OHIO
CHARLES S PARSONS
E-72449
REGISTERED PROFESSIONAL ENGINEER
11/15/23

not published; all rights reserved

Renovation for:
Coshocton Port Authority - Coshocton Collaborative
538 Main St
Coshocton, OH, 43812

MARK	DATE	DESCRIPTION
1	12/01/2023	ADDENDUM NO 1

PROJECT NO: 19.137
DATE: 11/15/2023

FIRST FLOOR POWER AND COMMUNICATIONS PLAN

E2.2

S:\Shared\Active\23gy013-Coshocton Port Authority - Collaboration Renovation CD\23gy013 E2.2 First Floor Pwr and Comm Plan.dwg [24x36] December 03, 2023 - 8:46pm

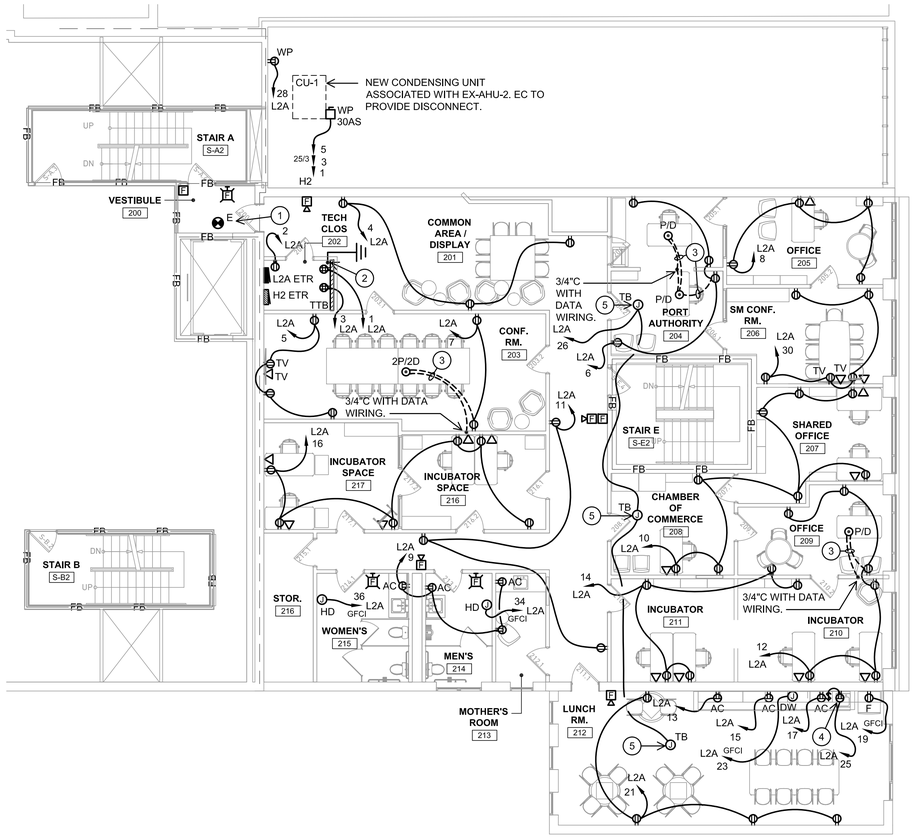

SECOND FLOOR POWER AND COMMUNICATIONS PLAN

SCALE: 1/8" = 1'-0"

NORTH

GRAPHIC SCALE: 1/8" = 1' - 0

2' 0 2' 4' 6' 8' 12' 16' 24' 32' 40'

FLOOR BOX SYMBOL LEGEND

SYMBOL	DESCRIPTION
P/D ●	RECESSED FLUSH FLOOR POKE THROUGH REQUIRES 6" CORE HOLE. EC SHALL XRAY THE FLOOR AND VERIFY CEILING SPACE BELOW WITH OWNER PRIOR TO CORE DRILL. P/D = PROVIDE (1) 20 AMP DUPLEX POWER OUTLET AND (1) DATA PORT. HUBBELL SYSTEM ONE FIRE RATED POKE-THROUGH (FRPT) #S1R6PTFIT WITH DEVICE PLATES AS REQUIRED. PROVIDE BLACK POWDER COAT COVER.
2P/2D ●	RECESSED FLUSH FLOOR POKE THROUGH REQUIRES 6" CORE HOLE. EC SHALL XRAY THE FLOOR AND VERIFY CEILING SPACE BELOW WITH OWNER PRIOR TO CORE DRILL. 2P/2D = PROVIDE (2) 20 AMP DUPLEX POWER OUTLET AND (2) DATA PORTS. HUBBELL SYSTEM ONE FIRE RATED POKE-THROUGH (FRPT) #S1R6PTFIT WITH DEVICE PLATES AS REQUIRED. PROVIDE BLACK POWDER COAT COVER.

DATA INSTALLATION SCHEDULE

NUMBER OF DATA OR PHONE OUTLETS / CABLES INDICATED AT EACH OUTLET LOCATION.	MINIMUM SIZE OF EMT CONDUIT REQUIRED. ROUTE CONDUIT/CABLE TO TTB LOCATED ON SECOND FLOOR IN IT TECH ROOM 202.
1-3	3/4" CONDUIT
3-6	1" CONDUIT
6-9	1-1/4" CONDUIT

GENERAL POWER PLAN NOTES:

1. COORDINATE LOCATIONS OF RECEPTACLES AND OTHER WALL MOUNTED DEVICES WITH THE ARCHITECTURAL WALL ELEVATIONS AND FINISHES.
2. COORDINATE LOCATIONS OF MECHANICAL EQUIPMENT WITH MC. ALL DISCONNECTS AND ELECTRICAL EQUIPMENT SHALL BE MOUNTED IN AN ACCESSIBLE LOCATION WITH PROPER WORKING SPACE CLEARANCES PER THE NEC.
3. ALL FEEDER RUNS SHOWN ARE DIAGRAMMATIC. EC SHALL FIELD DETERMINE ACTUAL FEEDER RUNS AND PROVIDE PULL AND SPLICE BOXES PER NEC REQUIREMENTS AS REQUIRED TO COMPLETE THE RUN.
4. IF REQUIRED BY NEW WALL RESURFACING, OR IF SPECIFICALLY INDICATED, EC SHALL SPLICE/EXTEND EXISTING FIRE ALARM WIRING TO NEW DEVICE LOCATIONS. EC SHALL COORDINATE ALL FIRE ALARM SYSTEM REVISIONS WITH SYSTEM BASE BUILDING VENDOR AND INCLUDE ALL REQUIREMENTS WITHIN BID SUBMITTAL.
5. VERIFY ANY EXTERIOR WALLS BEING FURRED OUT AND PROVIDE SHALLOW BOXES WHERE REQUIRED FOR FLUSH INSTALLATION OF OUTLETS AND RECEPTACLES. NO CONDUIT, RECEPTACLES, OUTLETS, ETC. SHALL BE SURFACE MOUNTED UNLESS APPROVED BY THE ARCHITECT AND OWNER.

POWER AND COMMUNICATIONS KEY NOTES:

1. PROVIDE NEW SMOKE DETECTOR IN ELEVATOR LOBBY.
2. EC SHALL PROVIDE A GROUND BUS: SIEMENS US2 EC2GB15 GROUND BAR KIT WITH 15 TERMINAL POSITIONS, AND #4 AWG GROUND CONDUCTOR TO POINT OF SERVICE GROUND OR BUILDING STEEL IF AVAILABLE AND IF EASIER TO ACCESS.
3. CONDUIT INDICATED SHALL BE ROUTED IN CEILING SPACE BELOW. DRILL UP INTO WALLS INDICATED.
4. PROVIDE GFCI RECEPTACLE UNDER COUNTER FOR GARBAGE DISPOSAL. PROVIDE SWITCH ABOVE COUNTER FOR CONTROL OF GARBAGE DISPOSAL. IF SWITCH IS NEAR A RECEPTACLE, BOTH SHALL BE IN A COMMON BACKBOX WITH COMMON FACEPLATE.
5. PROVIDE 120 VOLT IN CEILING SPACE FOR HVAC "TB" BOX CONTROL POWER. LOCATE AS DIRECTED BY MC ON SITE.

FIRE WALL/ FIRE BARRIER GENERAL NOTES:

1. FIRE WALLS AND FIRE BARRIERS ARE INDICATED FOR REFERENCE ONLY. EC SHALL VERIFY WITH ARCHITECTURAL CODE PLANS PRIOR TO ROUGH IN. ARCHITECTURAL DRAWINGS SHALL TAKE PRECEDENCE IN CASES OF DISCREPANCIES.
2. REFER TO DRAWINGS E1.1 AND E1.3 FOR ADDITIONAL INFORMATION.

STADELMAN ASSOCIATES INC.

© COPYRIGHT 2023 - ALL RIGHTS RESERVED

8614 HARTMAN ROAD
WADSWORTH, OH 44281
PH: 330-926-2600 FAX: 330-926-4531

SōL Harris/Day architecture
Designed for People Designed for Life.
6677 Frank Avenue NW, North Canton, OH 44720 | 330.493.3722 | www.solharrisday.com

BID / PERMIT SET

STATE OF OHIO
CHARLES S PARSONS
E-72449
REGISTERED PROFESSIONAL ENGINEER
11/15/23

not published; all rights reserved

Renovation for:
Coshocton Port Authority - Coshocton Collaborative
538 Main St
Coshocton, OH, 43812

MARK	DATE	DESCRIPTION
1	12/01/2023	ADDENDUM NO 1

PROJECT NO: 19.137
DATE: 11/15/2023

SECOND FLOOR POWER AND COMMUNICATIONS PLAN

E2.3

S:\Shared\Active\23gyo\13-Coshocton Port Authority - Collaboration Renovation CD\23gyo13 E2.3 Second Floor Pwr and Comm Plan.dwg [24x36] December 03, 2023 - 8:45pm

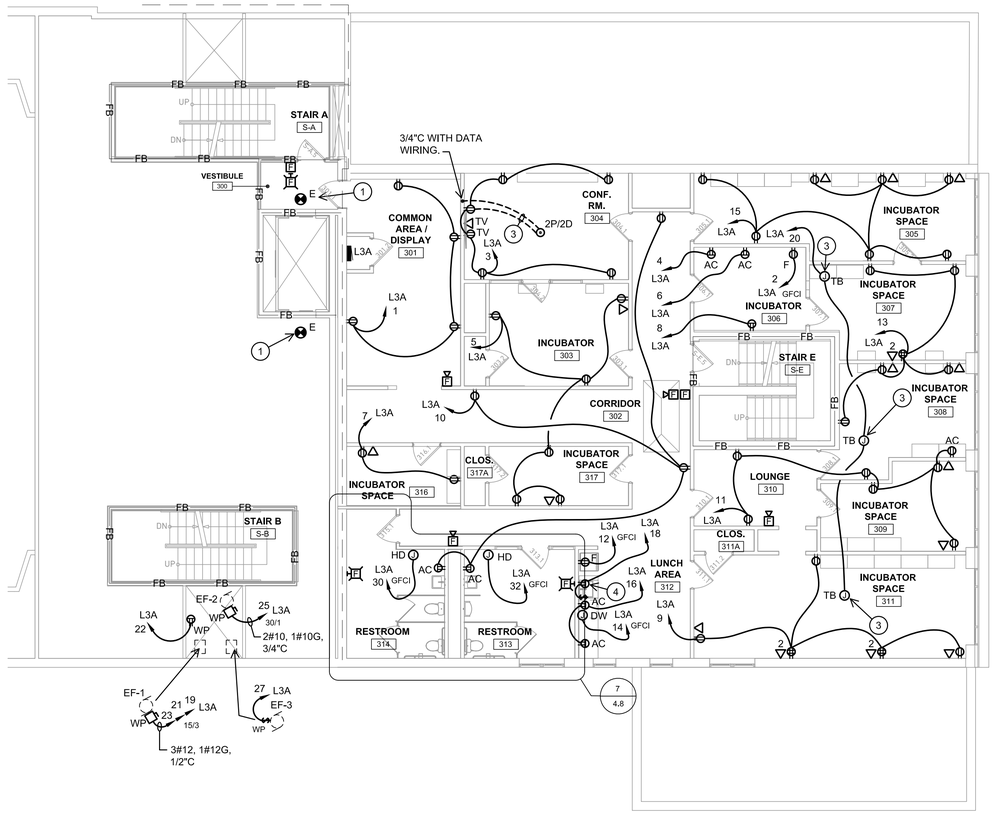

THIRD FLOOR POWER AND COMMUNICATIONS PLAN

SCALE: 1/8" = 1'-0"

NORTH

GRAPHIC SCALE: 1/8" = 1' - 0

2' 0 2' 4' 6' 8' 12' 16' 24' 32' 40'

FLOOR BOX SYMBOL LEGEND

SYMBOL	DESCRIPTION
2P/2D	RECESSED FLUSH FLOOR POKE THROUGH REQUIRES 6" CORE HOLE. EC SHALL XRAY THE FLOOR AND VERIFY CEILING SPACE BELOW WITH OWNER PRIOR TO CORE DRILL. 2P/2D = PROVIDE (2) 20 AMP DUPLEX POWER OUTLET AND (2) DATA PORTS. HUBBELL SYSTEM ONE FIRE RATED POKE-THROUGH (FRPT) #S1R6PTFIT WITH DEVICE PLATES AS REQUIRED. PROVIDE BLACK POWDER COAT COVER.

DATA INSTALLATION SCHEDULE

NUMBER OF DATA OR PHONE OUTLETS / CABLES INDICATED AT EACH OUTLET LOCATION.	MINIMUM SIZE OF EMT CONDUIT REQUIRED. ROUTE CONDUIT/CABLE TO TTB LOCATED ON SECOND FLOOR IN IT TECH ROOM 202.
1-3	3/4" CONDUIT
3-6	1" CONDUIT
6-9	1-1/4" CONDUIT

GENERAL POWER PLAN NOTES:

1. COORDINATE LOCATIONS OF RECEPTACLES AND OTHER WALL MOUNTED DEVICES WITH THE ARCHITECTURAL WALL ELEVATIONS AND FINISHES.
2. COORDINATE LOCATIONS OF MECHANICAL EQUIPMENT WITH MC. ALL DISCONNECTS AND ELECTRICAL EQUIPMENT SHALL BE MOUNTED IN AN ACCESSIBLE LOCATION WITH PROPER WORKING SPACE CLEARANCES PER THE NEC.
3. ALL FEEDER RUNS SHOWN ARE DIAGRAMMATIC. EC SHALL FIELD DETERMINE ACTUAL FEEDER RUNS AND PROVIDE PULL AND SPLICE BOXES PER NEC REQUIREMENTS AS REQUIRED TO COMPLETE THE RUN.
4. IF REQUIRED BY NEW WALL RESURFACING, OR IF SPECIFICALLY INDICATED, EC SHALL SPLICE/EXTEND EXISTING FIRE ALARM WIRING TO NEW DEVICE LOCATIONS. EC SHALL COORDINATE ALL FIRE ALARM SYSTEM REVISIONS WITH SYSTEM BASE BUILDING VENDOR AND INCLUDE ALL REQUIREMENTS WITHIN BID SUBMITTAL.
5. VERIFY ANY EXTERIOR WALLS BEING FURRED OUT AND PROVIDE SHALLOW BOXES WHERE REQUIRED FOR FLUSH INSTALLATION OF OUTLETS AND RECEPTACLES. NO CONDUIT, RECEPTACLES, OUTLETS, ETC. SHALL BE SURFACE MOUNTED UNLESS APPROVED BY THE ARCHITECT AND OWNER.

POWER AND COMMUNICATIONS KEY NOTES:

1. PROVIDE NEW SMOKE DETECTOR IN ELEVATOR LOBBY.
2. NOT USED.
3. PROVIDE 120 VOLT IN CEILING SPACE FOR HVAC "TB" BOX CONTROL POWER. LOCATE AS DIRECTED BY MC ON SITE.
4. PROVIDE GFCI RECEPTACLE UNDER COUNTER FOR GARBAGE DISPOSAL. PROVIDE SWITCH ABOVE COUNTER FOR CONTROL OF GARBAGE DISPOSAL. IF SWITCH IS NEAR A RECEPTACLE, BOTH SHALL BE IN A COMMON BACKBOX WITH COMMON FACEPLATE.

FIRE WALL/ FIRE BARRIER GENERAL NOTES:

1. FIRE WALLS AND FIRE BARRIERS ARE INDICATED FOR REFERENCE ONLY. EC SHALL VERIFY WITH ARCHITECTURAL CODE PLANS PRIOR TO ROUGH IN. ARCHITECTURAL DRAWINGS SHALL TAKE PRECEDENCE IN CASES OF DISCREPANCIES.
2. REFER TO DRAWINGS E1.1 AND E1.3 FOR ADDITIONAL INFORMATION.

STADELMAN ASSOCIATES INC.

© COPYRIGHT 2023 - ALL RIGHTS RESERVED

8614 HARTMAN ROAD
WADSWORTH, OH 44281
PH: 330-926-2600 FAX: 330-926-4531

SōL Harris/Day architecture
Designed for People Designed for Life.
6677 Frank Avenue NW, North Canton, OH 44720 | 330.493.3722 | www.solharrisday.com

BID / PERMIT SET

STATE OF OHIO
CHARLES S PARSONS
E-72449
REGISTERED ARCHITECT
11/15/23

not published; all rights reserved

Renovation for:
Coshocton Port Authority - Coshocton Collaborative
538 Main St
Coshocton, OH, 43812

MARK	DATE	DESCRIPTION
1	12/01/2023	ADDENDUM NO 1

PROJECT NO: 19.137
DATE: 11/15/2023

THIRD FLOOR POWER AND COMMUNICATIONS PLAN

E2.4

S:\Shared\Active\23gy013-Coshocton Port Authority - Collaboration Renovation CD\23gy013 E2.4 Third Floor Pwr and Comm Plan.dwg [24x36] December 08, 2023 - 8:45pm

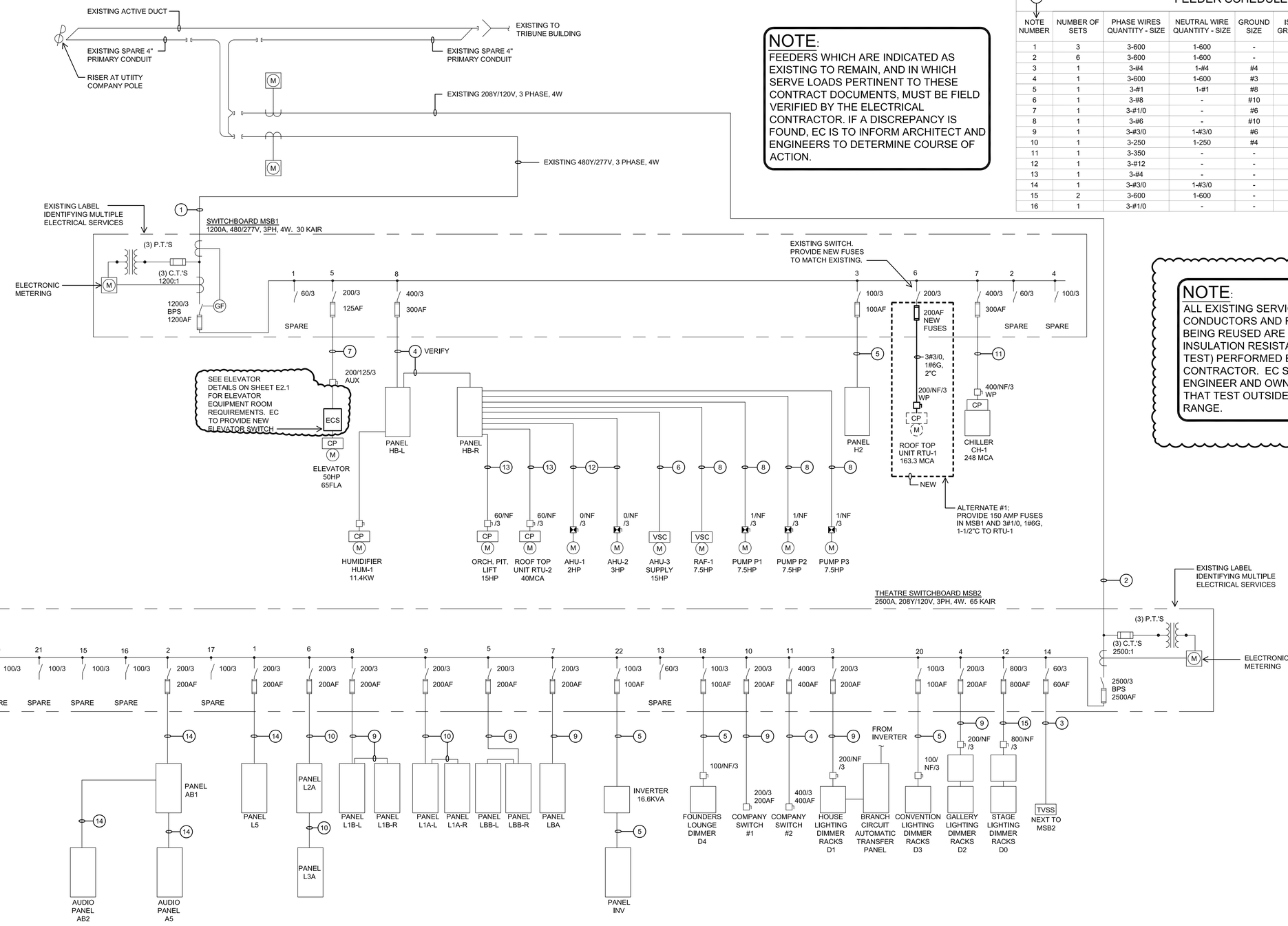

FEEDER SCHEDULE

NOTE NUMBER	NUMBER OF SETS	PHASE WIRES QUANTITY - SIZE	NEUTRAL WIRE QUANTITY - SIZE	GROUND SIZE	ISOLATED GROUND SIZE	CONDUIT SIZE PER SET	COMMENTS
1	3	3-600	1-600	-	-	4"	-
2	6	3-600	1-600	-	-	4"	-
3	1	3-#4	1-#4	#4	-	1.25"	-
4	1	3-600	1-600	#3	-	3.5"	-
5	1	3-#1	1-#1	#8	-	1.5"	-
6	1	3-#8	-	#10	-	.75"	-
7	1	3-#1/0	-	#6	-	2"	TYPE THW OR RH
8	1	3-#6	-	#10	-	1"	-
9	1	3-#3/0	1-#3/0	#6	#6	2"	-
10	1	3-250	1-250	#4	#4	3"	FEEDER DERATED
11	1	3-350	-	-	-	2.5"	-
12	1	3-#12	-	-	-	.75"	-
13	1	3-#4	-	-	-	1"	-
14	1	3-#3/0	1-#3/0	-	-	2"	-
15	2	3-600	1-600	-	-	4"	-
16	1	3-#1/0	-	-	-	2"	-

NOTE:
FEEDERS WHICH ARE INDICATED AS EXISTING TO REMAIN, AND IN WHICH SERVE LOADS PERTINENT TO THESE CONTRACT DOCUMENTS, MUST BE FIELD VERIFIED BY THE ELECTRICAL CONTRACTOR. IF A DISCREPANCY IS FOUND, EC IS TO INFORM ARCHITECT AND ENGINEERS TO DETERMINE COURSE OF ACTION.

NOTE:
ALL EXISTING SERVICE ENTRANCE CONDUCTORS AND FEEDERS THAT ARE BEING REUSED ARE TO HAVE AN INSULATION RESISTANCE TEST (MEGGER TEST) PERFORMED BY THE ELECTRICAL CONTRACTOR. EC SHALL NOTIFY ENGINEER AND OWNER OF ANY CABLES THAT TEST OUTSIDE OF THE ACCEPTED RANGE.

ONE-LINE POWER DISTRIBUTION DIAGRAM

SCALE: NONE

NOTE:
EVERYTHING SHOWN ON THIS ONE-LINE DIAGRAM IS EXISTING TO REMAIN UNLESS SPECIFICALLY NOTED OTHERWISE.

STADELMAN ASSOCIATES INC.

© COPYRIGHT 2023 - ALL RIGHTS RESERVED

8614 HARTMAN ROAD
WADSWORTH, OH 44281
PH: 330-926-2600 FAX: 330-926-4531

SōL Harris/Day architecture
Designed for People. Designed for Life.
6677 Frank Avenue NW, North Canton, OH 44720 | 330.493.3722 | www.solharrisday.com

BID / PERMIT SET

STATE OF OHIO — CHARLES S PARSONS — E-72449 — REGISTERED PROFESSIONAL ENGINEER — 11/15/23

not published; all rights reserved

Renovation for:
Coshocton Port Authority - Coshocton Collaborative
538 Main St
Coshocton, OH, 43812

MARK	DATE	DESCRIPTION
1	12/01/2023	ADDENDUM NO 1

PROJECT NO: 19.137
DATE: 11/15/2023

ONE LINE DIAGRAM

E4.1

S:\Shared\Active\23gy013-Coshocton Port Authority - Collaboration Renovation CD\23gy013 E4.1 One Line Diagram.dwg [24x36] December 03, 2023 - 8:44pm