KLAMATH COUNTY
LAND DEVELOPMENT CODE

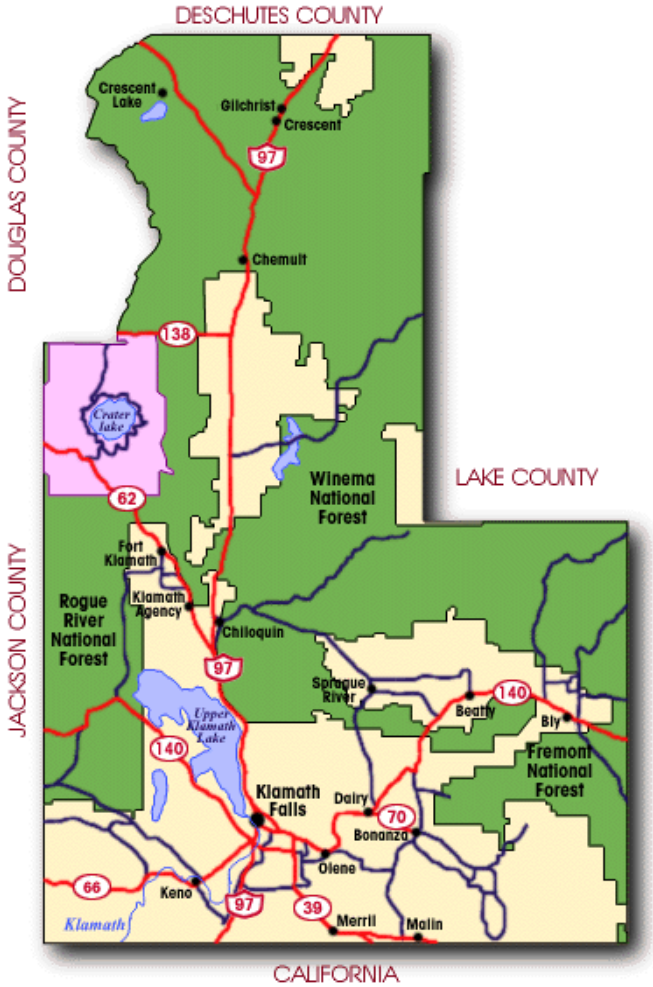

Klamath County, Oregon

TABLE OF CONTENTS

CHAPTER 10
GENERAL PROVISIONS

Article/Section **Page**

ARTICLE 10 – ENACTMENT

10.010 Title 10-1
10.020 Purpose 10-1
10.030 Authority 10-1
10.040 Relationship to Other Codes and Ordinances 10-1
10.050 Replacement of Other Ordinances 10-1
10.060 Repealer 10-2
10.070 Severability 10-2

ARTICLE 11 – DEFINITIONS

11.010 Purpose 11-1
11.020 Definitions Included by Reference 11-1
11.030 Terms Defined Accepted Farm Practice 11-1

ARTICLE 12 – ADMINISTRATION

12.010 Scope and Compliance 12-1
12.020 Consistency with Plans and Laws 12-1
12.030 Official Zoning Maps 12-2
12.040 Uncertainties of Zone Boundaries 12-2
12.050 Fees Required 12-3
12.060 Rules of Interpretation 12-3
12.070 Classification of Uses 12-4

Article/Section **Page**

ARTICLE 13 – NONCONFORMING LOTS, USES, AND STRUCTURES

13.010 Definitions 13-1
13.020 Nonconforming Lots and Parcels 13-1
13.030 Nonconforming Uses 13-2
13.040 Nonconforming Structures 13-3
13.050 Damaged or Destroyed Uses and Structures 13-3

ARTICLE 14 – ENFORCEMENT

14.010 Purpose 14-1
14.020 Prohibitions 14-1
14.030 Enforcement Responsibilities 14-1
14.040 Citations/Enforcement Orders 14-2
14.050 Revocation of Approval or Security 14-2
14.060 Procedures 14-2
14.070 Jurisdiction 14-3
14.080 Interference Prohibited 14-3
14.090 Penalties 14-4
14.100 Severability 14-4

ARTICLE 15 – IMPROVEMENT ASSURANCES

15.010 Purpose 15-1
15.020 Improvements 15-1
15.030 Performance Agreement 15-1
15.040 Execution of Performance Agreement 15-2

Article/Section **Page**

CHAPTER 20
REVIEW PROCEDURES

ARTICLE 20 – BASIC PROVISIONS

20.010 Purpose of Review Procedures 20-1
20.020 Types of Review Procedures 20-1
20.030 Statement Supporting Decision 20-1
20.040 Conditions of Approval 20-2

ARTICLE 21 – PRE-APPLICATION CONFERENCE PROCEDURE

21.010 Purpose 21-1
21.020 Scheduling 21-1
21.030 Content 21-1
21.040 Notice, Hearing and Appeal 21-1

ARTICLE 22 – ADMINISTRATIVE REVIEW PROCEDURE

22.010 Purpose 22-1
22.020 Rules of Procedures 22-1
22.030 Type I Review 22-1
22.040 Type II Review 22-2
22.050 Registry 22-2

ARTICLE 24 – HEARINGS OFFICER REVIEW PROCEDURE

24.010 Purpose 24-1
24.020 Appointment and Duties 24-1
24.030 Rules of Procedure 24-1
24.040 Public Hearing and Notice 24-2
24.050 Review and Decision 24-2
24.060 Appeal 24-3

ARTICLE 26 – PLANNING COMMISSION REVIEW PROCEDURE

26.010 Purpose 26-1
26.020 Rules of Procedure 26-1

Article/Section **Page**

26.030 Public Hearing and Notice 26-3
26.040 Review and Decision 26-3
26.050 Appeal 26-4

ARTICLE 28 – BOARD OF COUNTY COMMISSIONERS REVIEW PROCEDURE

28.010 Purpose 28-1
28.020 Rules of Procedure 28-1
28.030 Public Hearing and Notice 28-1
28.040 Review and Decision 28-2
28.050 Appeal 28-2

Article/Section **Page**

CHAPTER 30
PUBLIC HEARINGS, NOTICE AND APPEAL

ARTICLE 30 – BASIC PROVISIONS

30.010 Purpose 30-1
30.020 Applications and Staff Reports 30-1

ARTICLE 31 – PUBLIC HEARINGS

31.010 Responsibility of the Planning Director 31-1
31.020 Special Hearings 31-1
31.030 Challenges to Impartiality 31-1
31.040 Disqualification 31-2
31.050 Participation of Officers or Employees 31-2
31.060 Ex Parte Contacts 31-3
31.070 Abstention or Disqualification 31-3
31.080 Rights of Disqualified Member of the Review Body 31-3
31.090 Burden and Nature of Proof 31-4
31.100 Order of Proceedings 31-4
31.105 Conduct of Quasi-Judicial Hearings 31-6
31.110 Standing 31-7
31.115 Decision 31-7
31.120 Final Order 31-7
31.130 Record of Proceedings 31-8

ARTICLE 32 – PUBLIC NOTICE

32.010 Purpose 32-1
32.020 Notice Schedule 32-1
32.030 Type of Notice 32-1
32.040 Content of Mailed Notice 32-3
32.050 Cost of Notice 32-4
32.060 Receipt of Notice 32-5
32.070 Notice Schedule 32-5

Article/Section **Page**

ARTICLE 33 – APPEAL OF DECISIONS

33.010 Purpose 33-1

33.020 Appeal Authority 33-1

33.030 Notice of Appeal 33-1

33.040 Statement of Appeal 33-1

33.050 Effect of Appeal 33-1

33.060 Standing to Appeal 33-2

33.070 Action of the Board of County Commissioners 33-2

33.080 De Novo Appeal Hearings 33-3

Article/Section **Page**

CHAPTER 40
APPLICATION PROCEDURES

ARTICLE 40 – BASIC PROVISIONS

40.010 Purpose 40-1
40.020 Types of Applications 40-1

ARTICLE 41 – SITE PLAN REVIEW

41.010 Purpose 41-1
41.020 Application 41-1
41.030 Review Procedure 41-1
41.040 Review Criteria 41-1
41.050 Processing 41-2
41.060 Site Plan Requirements 41-2
41.070 Performance Agreement 41-3
4l .080 Time Limit on Site Plan Review 41-3

ARTICLE 42 – TEMPORARY USE PERMIT

42.010 Purpose 42-1
42.020 Review Procedure 42-1
42.030 Permitted Temporary Uses 42-1
42.040 Processing 42-1
42.050 Review Criteria and Standards 42-2
42.055 Outdoor Mass Gathering Review Criteria and Standards 42-3
42.060 Annual Review 42-5
42.070 Performance Agreement 42-5

ARTICLE 43 – VARIANCES

43.010 Purpose 43-1
43.020 Review Procedure 43-1
43.030 Review Criteria 43-1
43.040 Processing 43-2

Article/Section **Page**

43.050 Performance Agreement 43-3
43.060 Exceptions for Accessory Buildings 43-3

ARTICLE 44 – CONDITIONAL USE PERMIT

44.010 Purpose 44-1
44.020 Review Procedure 44-1
44.030 Review Criteria 44-1
44.040 Processing 44-2
44.050 Time Limit on Conditional Use Permit Approval 44-3
44.060 Performance Agreement 44-4

ARTICLE 45 – LAND PARTITION

45.010 Purpose 45-1
45.020 Review Procedure 45-1
45.030 Partition Restrictions 45-1
45.040 Review Criteria 45-1
45.050 Processing 45-2
45.060 Tentative Partition Plan Requirements 45-3
45.070 Tentative Partition Plan Review 45-5
45.080 Improvements 45-6
45.090 Time Extension 45-6
45.100 Final Plat Requirements 45-7
45.110 Final Plat Review 45-8
45.120 Creation of Parcels in Rural Residential Land less than the minimum lot size 45-9

ARTICLE 45.5 – PROPERTY LINE ADJUSTMENT

45.510 Purpose 45.5-1
45.520 Review Procedure 45.5-1
45.530 Review Criteria 45.5-1
45.540 Processing 45.5-2
45.550 Finalizing the Property Line Adjustment 45.5-2

Article/Section **Page**

ARTICLE 46 – LAND SUBDIVISION

46.010 Purpose 46-1
46.020 Review Procedure 46-1
46.030 Review Criteria 46-1
46.040 Processing 46-2
46.050 Preliminary Subdivision Plat Requirements 46-3
46.060 Preliminary Subdivision Plat Review 46-6
46.070 Improvements 46-7
46.080 Time Extension 46-7
46.090 Final Plat Requirements 46-8
46.100 Final Plat Review 46-11
46.110 Standards for the Conversion of Existing Manufactured/Mobile Home Parks (MHP) to Manufactured/Mobile Home Park Subdivisions (MHPS) 46-12

Exhibit I Surveyor's Certificate 46-15
Exhibit II Owner's Declaration 46-16
Exhibit III Corporate Owner's Declaration 46-17
Exhibit IV Approvals 46-18
Exhibit V Bonding Agreement 46-19
Exhibit VI County Assessor's Certificate 46-20
Exhibit VII County Tax Collector Certificate 46-20
Exhibit VIII Filing Statement 46-21
Exhibit IX Certification of the Copy 46-21
Exhibit X Sewage Disposal System Certificate 46-22
Exhibit XI Sewage Disposal System Certificate 46-22
Exhibit XII Water Supply Certificate 46-23
Exhibit XIII Water Supply Certificate 46-23

ARTICLE 47 – CHANGE OF ZONE DESIGNATION (QUASI-JUDICIAL)

47.010 Purpose 47-1
47.020 Review Procedure 47-1
47.030 Review Criteria 47-1

Article/Section **Page**

47.040 Processing 47-2

ARTICLE 48 – CHANGE OF COMPREHENSIVE PLAN DESIGNATION (QUASI-JUDICIAL)

48.010 Purpose 48-1

48.020 Review Procedure 48-1

48.030 Review Criteria 48-1

48.040 Processing 48-1

ARTICLE 49 – LEGISLATIVE AMENDMENT TO THE KLAMATH COUNTY COMPREHENSIVE PLAN, LAND DEVELOPMENT CODE OR ZONING MAP

49.010 Purpose 49-1

49.020 Review Procedure 49-1

49.030 Review Criteria 49-1

49.040 Processing 49-2

Article/Section **Page**

CHAPTER 50
LAND USE ZONES

ARTICLE 50 – BASIC PROVISIONS

50.010 Purpose 50-1
50.020 List of Basic Zones 50-1
50.030 List of Special Purpose Zones 50-2
50.040 Transportation-Related Uses 50-3

ARTICLE 51 – RURAL COMMUNITY RESIDENTIAL (RCR)

51.010 Purpose 51-1
51.020 Permitted Uses 51-1
51.030 Conditional Uses 51-1
51.040 Property Development Standards 51-2

ARTICLE 51.1 – RURAL RESIDENTIAL (R-10)

51.110 Purpose 51.1-1
51.120 Permitted Uses 51.1-1
51.130 Conditional Uses 51.1-1
51.140 Property Development Standards 51.1-2

ARTICLE 51.2 – RURAL RESIDENTIAL (R-5)

51.210 Purpose 51.2-1
51.220 Permitted Uses 51.2-1
51.230 Conditional Uses 51.2-1
51.240 Property Development Standards 51.2-2

ARTICLE 51.3 – RURAL RESIDENTIAL (R-2)

51.310 Purpose 51.3-1
51.320 Permitted Uses 51.3-1
51.330 Conditional Uses 51.3-1
51.340 Property Development Standards 51.3-2

Article/Section **Page**

ARTICLE 51.4 – RURAL RESIDENTIAL (R-1)

51.410 Purpose 51.4-1
51.420 Permitted Uses 51.4-1
51.430 Conditional Uses 51.4-1
51.440 Property Development Standards 51.4-2

ARTICLE 51.5 – SUBURBAN RESIDENTIAL (RS)

51.510 Purpose 51.5-1
51.520 Permitted Uses 51.5-1
51.530 Conditional Uses 51.5-1
51.540 Property Development Standards 51.5-2

ARTICLE 51.6 – LOW DENSITY RESIDENTIAL (RL)

51.610 Purpose 51.6-1
51.620 Permitted Uses 51.6-1
51.630 Conditional Uses 51.6-1
51.640 Property Development Standards 51.6-2

ARTICLE 51.7 – MEDIUM DENSITY RESIDENTIAL (RM)

51.710 Purpose 51.7-1
51.720 Permitted Uses 51.7-1
51.730 Conditional Uses 51.7-1
51.740 Property Development Standards 51.7-2

ARTICLE 51.8 – HIGH DENSITY RESIDENTIAL (RH)

51.810 Purpose 51.8-1
51.820 Permitted Uses 51.8-1
51.830 Conditional Uses 51.8-1
51.840 Property Development Standards 51.8-2

Article/Section **Page**

ARTICLE 52.2 – NEIGHBORHOOD COMMERCIAL (CN)

52.210 Purpose 52.2-1
52.220 Permitted Uses 52.2-1
52.230 Conditional Uses 52.2-1
52.240 Property Development Standards 52.2-2

ARTICLE 52.4 – GENERAL COMMERCIAL (CG)

52.410 Purpose 52.4-1
52.420 Permitted Uses 52.4-1
52.430 Conditional Uses 52.4-2
52.440 Property Development Standards 52.4-2

ARTICLE 52.6 – RECREATIONAL COMMERCIAL (CR)

52.610 Purpose 52.6-1
52.620 Permitted Uses 52.6-1
52.630 Conditional Uses 52.6-1
52.640 Property Development Standards 52.6-2

ARTICLE 52.8 – TRANSPORTATION COMMERCIAL (CT)

52.810 Purpose 52.8-1
52.820 Permitted Uses 52.8-1
52.830 Conditional Uses 52.8-2
52.840 Property Development Standards 52.8-2

ARTICLE 52.91 – RURAL COMMUNITY COMMERCIAL (RUC-C)

52.911 Purpose 52.91-1
52.912 Permitted Uses 52.91-1
52.913 Conditional Uses 52.91-2
52.914 Property Development Standards 52.91-2

Article/Section **Page**

ARTICLE 52.92 – RURAL SERVICE CENTER COMMERCIAL (RSC-C)

52.921 Purpose 52.92-1
52.922 Permitted Used 52.92-1
52.923 Conditional Uses 52.92-2
52.924 Property Development Standards 52.92-2

ARTICLE 52.93 – RURAL COMMUNITY RESORT COMMERCIAL (RCR-C)

52.931 Purpose 52.93-1
52.932 Permitted Uses 52.93-1
52.933 Conditional Uses 52.93-2
52.934 Property Development Standards 52.93-3

ARTICLE 53.2 – LIGHT INDUSTRIAL (IL)

53.210 Purpose 53.2-1
53.220 Permitted Uses 53.2-1
53.230 Conditional Uses 53.2-1
53.240 Property Development Standards 53.2-2

ARTICLE 53.4 – HEAVY INDUSTRIAL (IH)

53.410 Purpose 53.4-1
53.420 Permitted Uses 53.4-1
53.430 Conditional Uses 53.4-1
53.440 Property Development Standards 53.4-2

ARTICLE 53.5 – AIR/RAIL TRANSPORTATION

53.510 Purpose 53.5-1
53.520 Permitted Uses 53.5-1
53.530 Property Development Standards 53.5-1

ARTICLE 53.91 – RURAL COMMUNITY INDUSTRIAL (RUC-I)

53.911 Purpose 53.91-1
53.912 Permitted Uses 53.91-1

Article/Section **Page**

53.913 Conditional Uses 53.91-2
53.914 Use Limitations 53.91-2
53.915 Property Development Standards 53.91-3

ARTICLE 53.92 – RURAL SERVICE CENTER INDUSTRIAL (RSC-I)

53.921 Purpose 53.92-1
53.922 Permitted Uses 53.92-1
53.923 Conditional Uses 53.92-2
53.924 Use Limitations 53.92-2
53.925 Property Development Standards 53.92-3

ARTICLE 54 – EXCLUSIVE FARM USE (EFU)

54.010 Purpose 54-1
54.015 Definitions 54-1
54.020 Permitted Uses 54-2
54.030 Conditional Uses 54-4
54.035 Criteria for Guest Ranches 54-7
54.040 Conditional Use Criteria 54-8
54.050 General Review Criteria for EFU Zone Dwellings 54-8
54.060 Farm Dwellings 54-9
54.070 Non-Farm Dwellings 54-12
54.080 Lot of Record Dwellings in EFU Zones 54-14
54.090 Land Divisions in EFU Zones 54-16
54.100 Property Development Standards 54-17

ARTICLE 55 – FORESTRY (F)

55.010 Purpose 55-1
55.020 Outright Uses 55-1
55.030 Permitted Uses 55-2
55.040 Conditional Uses 55-3
55.050 Conditional Use Criteria 55-5
55.060 General Review Criteria for Forest Zone Dwellings 55-5

Article/Section **Page**

55.070 Lot of Record Dwellings in Forest Zones 55-8
55.080 160 Acre Template Dwellings 55-10
55.090 Large Ownership Dwellings 55-12
55.095 Youth Camps 55-12
55.100 Land Divisions in Forest Zones 55-16
55.110 Property Development Standards 55-17

ARTICLE 55.2 – FORESTRY/RANGE (FR)

55.210 Purpose 55.2-1
55.220 Application 55.2-1
55.230 Procedure 55.2-1
55.250 Land Divisions in Forestry/Range Zones 55.2-1
55.260 Property Development Standards 55.2-2

ARTICLE 56 – NON-RESOURCE (NR)

56.010 Purpose 56-1
56.020 Permitted Uses 56-1
56.030 Conditional Uses 56-1
56.040 Property Development Standards 56-1

ARTICLE 56.2 – OPEN SPACE AND CONSERVATION (OS&C)

56.210 Purpose 56.2-1
56.220 Permitted Uses 56.2-1
56.230 Property Development Standards 56.2-1
56.240 Buildings and Structures 56.2-1

ARTICLE 56.4 – TRAIN PARK (TRP)

56.410 Purpose 56.4-1
56.415 Miniature Railroad Support Area 56.4-1
56.420 Outright Uses 56.4-1
56.430 Permitted Uses 56.4-1
56.440 Conditional Uses 56.4-2

Article/Section **Page**

56.450 Property Development Standards 56.4-2

ARTICLE 57 – SIGNIFICANT RESOURCE OVERLAY (SRO)

57.010 Purpose 57-1
57.020 Definitions 57-1
57.030 Application 57-2
57.040 Conflicting Uses 57-2
57.050 General Review Procedure 57-4
57.060 General Review Criteria 57-6
57.070 Specific Development Criteria and Standards 57-6
57.080 Inventory Amendment Procedure 57-10
57.090 Resource Management Agencies 57-11

ARTICLE 58 – AIRPORT SAFETY OVERLAY - KINGSLEY FIELD (ASK)

58.010 Airport Safety Zones Defined 58-1
58.020 Use Restrictions 58-2
58.030 Height Limitations 58-3

ARTICLE 58.2 – AIRPORT NOISE OVERLAY - KINGSLEY FIELD (ANK)

58.210 Application 58.2-1
58.220 Permitted and Conditionally Permitted Uses 58.2-1
58.230 Mitigation of Noise Impacts 58.2-2

ARTICLE 58.4 – AIRSTRIP SAFETY OVERLAY
BEAVER MARSH, CHILOQUIN, CRESCENT LAKE AND MALIN (AS)

58.410 Airstrip Safety Zones Defined 58.4-1
58.420 Use Restrictions 58.4-1
58.430 Height Restrictions 58.4-2

ARTICLE 59 – FLOOD HAZARD OVERLAY (FHZ)

59.010 Purpose 59-1
59.020 Flood Hazard Area Defined 59-1
59.025 Flood Hazard Determination 59-1

Article/Section **Page**

59.030 Interpreting Flood Maps 59-1
59.040 Development Requirements 59-1
59.050 Permit Review 59-2
59.060 Record Keeping 59-2
59.070 Exemptions to Flood Hazard Area Standards 59-2
59.080 Site Design Standards 59-3
59.090 General Development Standards 59-3

59.100 Unavailable Elevation Data 59-4
59.110 Specific Standards 59-4
59.120 Floodways 59-6
59.130 Alteration of Water Courses 59-6

ARTICLE 59.4 – GEOTHERMAL OVERLAY (GEO)

59.410 Purpose 59.4-1
59.420 Application 59.4-1
59.430 Permitted Uses 59.4-1
59.440 Conditional Uses 59.4-1
59.450 Procedure 59.4-2
59.460 Concept Plan 59.4-3
59.470 Concept Plan Standards 59.4-4
59.480 Development Plan 59.4-6
59.490 Site Design and Development Standards 59.4-8
59.495 Amendment of the Concept Plan or Development Plan 59.4-8

ARTICLE 59.8 – LIMITED USE OVERLAY (LU)

59.810 Purpose 59.8-1
59.820 Application 59.8-1
59.830 Procedure 59.8-1
59.840 Official Plan/Zoning Map 59.8-2
59.850 Site Plan Requirement 59.8-2

Article/Section **Page**

ARTICLE 59.9 – OR 66 GREEN SPRINGS HWY

INTERCHANGE AREA MANAGEMENT PLAN (IAMP)

59.910 Purpose 59.9-1

59.920 Zone Boundary 59.9-1

59.930 Applicability 59.9-1

59.940 Uses Permitted 59.9-1

59.950 Access Management 59.9-1

59.960 Administration 59.9-2

59.970 Interchange Area Management Plan Review and Update 59.9-3

Article/Section **Page**

CHAPTER 60
PLANNING DEPARTMENT DEVELOPMENT STANDARDS

ARTICLE 60 – BASIC PROVISIONS

60.010 Purpose 60-1
60.020 Application 60-1
60.030 Distinction between Urban and Rural Areas 60-1

ARTICLE 61 – LOT SIZE AND SHAPE

61.010 Lot Size and Shape 61-1
61.020 Flag Lots 61-2

ARTICLE 62 – HEIGHTS AND SETBACKS

62.010 Purpose 62-1
62.020 Height Requirements 62-1
62.030 Setback Requirements 62-1
62.040 Minimum Structure Height and Setback Requirements 62-2
62.050 Special Setback Requirements 62-3
62.060 Vision Clearance 62-4

ARTICLE 63 – WIRELESS TELECOMMUNICATIONS FACILITIES

63.010 Purpose 63-1
63.020 Review Procedure 63-1
63.030 Submittal Requirements 63-1
63.040 Conditions of Approval 63-2
63.050 Appeal Process 63-2

ARTICLE 64 – FENCES, WALLS AND SCREENING

64.010 Purpose 64-1
64.020 Vision Clearance 64-1
64.030 Permitted Fences, Walls and Hedges 64-1
64.040 Special Height Allowances 64-1
64.050 Swimming Pool Fencing 64-2

Article/Section **Page**

64.060 Required Screening 64-2

ARTICLE 65 – LANDSCAPING

65.010 Purpose 65-1
65.020 Required Landscaping 65-1
65.025 Landscape Plan 65-1
65.030 Landscaping Standards 65-1
65.040 Restrictions 65-2

ARTICLE 66 – SIGNS

66.010 Purpose 66-1
66.020 Exempt Signs 66-1
66.030 Sign Standards 66-1
66.040 Special Signs 66-4
66.050 Nonconforming Signs 66-5
66.060 Signs Not Addressed 66-5

ARTICLE 68 – OFF-STREET PARKING AND LOADING

68.010 Purpose 68-1
68.020 General Provisions 68-1
68.030 Off-street Parking Requirements 68-1
68.040 Disabled Person Parking 68-3
68.050 Off-street Parking Facility Location 68-5
68.060 Drop-off Points 68-6
68.070 Off-street Parking Design Standards 68-6
68.080 Off-street Loading Requirements 68-8

ARTICLE 69 – RURAL/WILDLAND FIRE SAFETY STANDARDS

69.010 Purpose 69-1
69.020 Application 69-1
69.030 Road Standards 69-1
69.040 Building Construction Standards 69-2

Article/Section **Page**

69.050 Water Supply Systems 69-2

69.060 Power Supply Systems 69-3

69.070 Fuel Break/Property Development Standards 69-3

69.080 Identification Signs 69-4

Article/Section **Page**

CHAPTER 70
PUBLIC WORKS DEPARTMENT DEVELOPMENT STANDARDS

ARTICLE 70 – BASIC PROVISIONS

70.010 Purpose 70-1
70.020 Distinction between Urban and Rural Areas 70-1
70.030 Improvement Procedures 70-1
Appendix A 70-3

ARTICLE 71 – VEHICULAR ACCESS AND CIRCULATION

71.010 Purpose 71-1
71.020 Access Standards 71-1
71.030 General Roadway Design Criteria and Standards 71-2
71.040 Minimum Right-of-way Widths 71-3
71.050 Improvements in the Klamath Falls Urban Area 71-5
71.060 Improvements Outside the Klamath Falls Urban Area 71-5
71.070 Roadway Alignment 71-6
71.080 Roadway Intersection Angles 71-6
71.090 Roadway Grades and Curves 71-6
71.100 Cul-de-sacs 71-7
71.110 Existing Streets 71-7
71.120 Reserve Strips and Street Plugs 71-7
71.130 Future Street Extensions 71-7
71.140 Half Streets 71-7
71.150 Blocks 71-8
71.160 Access Permits 71-8
71.170 Utility Placement in Rights-of-way 71-8
71.180 Manufactured/Mobile Home Park Streets 71-8

ARTICLE 72 – STREET NAMES, NUMBERS AND SIGNS

72.010 Street Names 72-1
72.020 Street Numbers 72-1

Article/Section **Page**

72.030 Street Signs 72-1

ARTICLE 73 – SITE DRAINAGE

73.010 Purpose 73-1
73.020 Drainage Plan Requirements 73-1
73.030 Drainage Plan Preparation 73-1
73.040 Drainage Plan Review 73-2
73.050 Drainage System Standards 73-2

ARTICLE 74 – URBAN AREA AND RURAL SERVICE CENTER WATER, SEWER AND FIRE PROTECTION SERVICE

74.010 Water Service 74-1
74.020 Sewer Service 74-1
74.030 Service within Water of Sewer District 74-1

ARTICLE 75 – RURAL AREA WATER AND SEWER SERVICE

75.010 Water Service 75-1
75.020 Sewer Service 75-1
75.030 Service within Water or Sewer District 75-2

ARTICLE 76 – UTILITIES

76.010 Utilities in Urban Areas 76-1
76.020 Utilities in Rural Area 76-1
76.030 Utility Easements 76-1

ARTICLE 77 – SOLID WASTE

77.010 Application 77-1
77.020 Collection Standards 77-1

Article/Section **Page**

CHAPTER 80
SPECIAL USE STANDARDS

ARTICLE 80 – BASIC PROVISIONS

80.010 Purpose 80-1
80.020 Application 80-1

ARTICLE 81 – MINERAL AND AGGREGATE EXTRACTION STANDARDS

81.005 Purpose 81-1
81.010 Goal 5 Standards 81-1
81.020 Application 81-3
81.030 Procedure 81-4
81.040 Review Procedure and Criteria for Conditional Use Permits 81-5
81.050 Development and Siting Standards 81-6
81.060 Conditions 81-9
81.070 Lifting the Overlay Zone 81-9

ARTICLE 82 – CAMPING

82.010 Purpose 82-1
82.020 Standards 82-1

ARTICLE 83 – PLANNED UNIT DEVELOPMENT

83.010 Purpose 83-1
83.020 Effect on Previously Approved PUD Zones 83-1
83.030 Review Authority 83-1
83.040 Application Procedures and Contents 83-2
83.050 Permitted Uses 83-3
83.060 Minimum Parcel Size 83-4
83.070 Density 83-4
83.080 Design Standards 83-4
83.090 Planned Unit Development Review Criteria 83-5
83.100 Preliminary Development Plan Review Procedure 83-5

Article/Section **Page**

83.110 Final Development Plan Review Procedure 83-6
83.120 Changes to a Final Development Plan 83-6

ARTICLE 84 – MANUFACTURED HOMES, RECREATIONAL VEHICLES, AND PARKS

84.010 Standards for Manufactured Homes 84-1
84.020 Criteria and Standards for Manufactured/Mobile Home Parks . 84-2
84.030 Manufactured Dwelling Storage 84-3
84.040 Siting Recreational Vehicles 84-3
84.050 Standards for Recreational Vehicle Parks 84-3
84.060 Replacement of single wide mobile/manufactured homes within the UGB 84-3

ARTICLE 85 – HOME OCCUPATIONS

85.010 Purpose 85-1
85.015 Definition 85-1
85.020 Permitted Use 85-1
85.030 Conditional Use 85-2
85.040 Annual Review 85-2
85.050 Bed and Breakfast Standards 85-2

ARTICLE 86 – ARCHEOLOGICAL RESOURCES

86.010 Purpose 86-1
86.020 Application 86-1
86.030 Exemptions 86-1
86.040 Probability Areas 86-1
86.050 Survey Requirements 86-2
86.060 Effect of Survey and Determination 86-3
86.070 Post-Development Discovery 86-3

ARTICLE 87 – HISTORIC BUILDINGS AND SITES

87.010 Purpose 87-1
87.020 Application 87-1
87.030 Review Procedure 87-1

Article/Section **Page**

87.040 Review Criteria 87-2
87.050 Review Body Action for Demolitions 87-3

ARTICLE 88 – DESTINATION RESORT OVERLAY (DRO)

88.010 Purpose 88-1
88.015 Applicability 88-1
88.020 Definitions 88-1
88.030 Standards 88-2
88.035 Standards for Small Destination Resorts 88-6
88.040 Permitted Uses 88-9
88.045 Accessory Uses 88-10
88.050 Application Procedures and Contents 88-11
88.055 Preliminary Development Plan Review Procedure 88-13
88.060 Approval Criteria 88-14
88.070 Final Development Plan Review Procedure 88-14
88.075 Duration of Final Development Plan Approval 88-15

Article/Section **Page**

CHAPTER 90
MISCELLANEOUS

ARTICLE 99 – SENSITIVE BIRD SPECIES HABITAT OVERLAY

99.005 Purpose 99-1
99.010 Definition of Sensitive Habitat Area 99-1
99.015 Limitations and Uses Permitted 99-1
99.020 Applicability 99-2
99.030 Site Plan 99-2
99.040 Site Plan Review 99-3
99.050 On-Site Validation 99-3
99.055 Protection Period 99-4
99.060 Removal and Expansion of Uses 99-4

CHAPTER 10
GENERAL PROVISIONS

ARTICLE 10
ENACTMENT

10.010 - TITLE
This code shall be known as the Klamath County Land Development Code.

10.020 - PURPOSE
The purpose of the Land Development Code is to coordinate Klamath County regulations governing the use and development of land, and more specifically:

A. To implement the Klamath County Comprehensive Plan and to guide and manage the future growth of the County in accordance with that plan;

B. To promote and protect the public health, safety, and general welfare of the citizens of Klamath County;

C. To regulate land use in a manner that will encourage and support the orderly development and beneficial use of lands within the County; and

D. To assist the public in identifying and understanding regulations affecting the development and use of specific parcels of land.

10.030 - AUTHORITY
The Land Development Code is enacted pursuant to Oregon Revised Statutes, Chapter 215.

10.040 - RELATIONSHIP TO OTHER CODES AND ORDINANCES
The Land Development Code, as codified herein, also shall be referenced as Division 3 of the Klamath County code and may be cited as such. Unless otherwise specified, references and citations as used in this code shall refer to the Klamath County Land Development Code.

10.050 - REPLACEMENT OF OTHER ORDINANCES
The Klamath County Land Development Code replaces all previously enacted zoning ordinances and subdivision ordinances of Klamath County.

10.060 – REPEALER

Klamath County Ordinances Numbers 45.2 through 45.16 are repealed in their entirety. All actions taken under any previously enacted Klamath County zoning ordinance or subdivision ordinance shall remain in effect subject to the original conditions of approval.

10.070 - SEVERABILITY

If any provisions or portions of this code, or the application thereof to any property or person is held invalid, the remainder of the code and the application of such provisions to other persons or lands shall not be affected.

ARTICLE 11
DEFINITIONS

11.010 - PURPOSE

The purpose of this article is to define the terms and phrases of this code that are technical, specialized, or may not reflect common usage.

11.020 - DEFINITIONS INCLUDED BY REFERENCE

In addition to the definitions in this article, the following are incorporated by reference. If any definition in this code conflicts with a definition included by reference, the definition of state statute shall prevail except where this code is more restrictive. Where inconsistencies are found between definitions in this section and definitions in other sections, definitions in this section shall prevail.

A. Oregon Revised Statutes Chapter 197
   - Comprehensive Plan Coordination; Planning Districts

B. Oregon Revised Statutes Chapter 215
   - County Planning; Zoning; Housing Codes

C. Oregon Revised Statutes Chapter 92
   - Subdivisions and Partitions

11.030 - TERMS DEFINED ACCEPTED FARM PRACTICE:

A mode of operation that is common to farms of a similar nature, necessary for the operation of such farms to obtain a profit in money, and customarily utilized in conjunction with farm use.

ORD. 45.2		Adopted February 16, 1984	Repealed April 3, 1986
ORD. 45.6	Art. 11.002	Amend April 3, 1986	Repealed March 26, 1987
ORD. 45.9	Art. 11.002	Amend March 26, 1987	Repealed August 15, 1990
ORD. 45.17 Updated Full KCLDC		**Adopt August 15, 1990**	
ORD. 45.20	Art. 446.003(20)(a) to Art. 11	Amend June 5, 1991	
ORD. 45.23		Amend June 5, 1991	
ORD. 45.24		Amend October 9, 1991	
ORD. 45.27		Amend April 8, 1992	Repealed February 15, 1995
ORD. 45.31		Adopt February 15, 1995	
ORD. 45.34		Amend May 24, 1996	
ORD. 45.35		Amend September 22, 1997	
ORD. 45.36		Amend November 10, 1998	
ORD. 45.36(B)		Amend December 8, 1998	
ORD. 45.36(C)		Amend February 11, 1999	
ORD. 45.38		Amend January 31, 2002	
ORD. 45.41		Amend January 31, 2002	
ORD. 45.44		Amend January 31, 2002	
ORD. 45.68 Art. 11		Amend April 18, 2008	Acknowledged May 12, 2008
ORD. 45.92		Adopt January 30, 2012	
ORD. 44.99		Adopt May 27, 2014	
ORD. 45.84		Adopt March 31, 2015	

ACCESSORY BUILDING OR STRUCTURE:
Any portable, demountable or permanent structure or building, the use of which is incidental and subordinate to that of the main building, but which is located on the same lot or parcel as the principal use or building. A manufactured dwelling may not be converted to an accessory building or use within the Urban Growth Boundary.

(a) "Accessory Building" means an accessory building as defined in ORS 446.003(1) and specifically includes, but is not limited to; cabanas, ramadas, storage sheds and garages.

(b) "Accessory Structure" means an accessory structure as defined in ORS 446.003(1) and specifically includes, but is not limited to; awnings, carports, decks, steps and ramps.

ACCESSWAY:
The place or way by which pedestrians or vehicles shall have adequate, safe and practical ingress and egress to or from a property, use or parking space. See **PROOF OF LEGAL ACCESS.**

ACCESS:
The right to cross between public and private property allowing pedestrians and vehicles to enter and leave property.

ADMINISTRATIVE SERVICES:
Consulting, record keeping, clerical or other similar services that deal directly with the public, together with incidental storage and the maintenance of necessary equipment and vehicles. Typical uses include government administrative buildings and post offices and substations.

ORD. 45.2		Adopted February 16, 1984	Repealed April 3, 1986
ORD. 45.6	Art. 11.002	Amend April 3, 1986	Repealed March 26, 1987
ORD. 45.9	Art. 11.002	Amend March 26, 1987	Repealed August 15, 1990
ORD. 45.17 Updated Full KCLDC		**Adopt August 15, 1990**	
ORD. 45.20	Art. 446.003(20)(a) to Art. 11	Amend June 5, 1991	
ORD. 45.23		Amend June 5, 1991	
ORD. 45.24		Amend October 9, 1991	
ORD. 45.27		Amend April 8, 1992	Repealed February 15, 1995
ORD. 45.31		Adopt February 15, 1995	
ORD. 45.34		Amend May 24, 1996	
ORD. 45.35		Amend September 22, 1997	
ORD. 45.36		Amend November 10, 1998	
ORD. 45.36(B)		Amend December 8, 1998	
ORD. 45.36(C)		Amend February 11, 1999	
ORD. 45.38		Amend January 31, 2002	
ORD. 45.41		Amend January 31, 2002	
ORD. 45.44		Amend January 31, 2002	
ORD. 45.68 Art. 11		Amend April 18, 2008	Acknowledged May 12, 2008
ORD. 45.92		Adopt January 30, 2012	
ORD. 44.99		Adopt May 27, 2014	
ORD. 45.84		Adopt March 31, 2015	

AGRICULTURE LAND:
Lands classified by the U.S. Soil Conservation Service as predominantly (51% or more) Class I-IV soils, lands in other soil classifications that are suitable for farm use as defined in ORS 215.203(2)(a), taking into account soil fertility, suitability for grazing, climatic conditions, existing and future availability of water for farm irrigation purposes, existing land use patterns, technological and energy inputs required, and accepted farming practices; and land that is necessary to permit farm practices to be undertaken on adjacent or nearby agricultural lands. Agricultural land does not include land within acknowledged exception areas for goals 3 and 4.

AGRICULTURAL PACKING AND PROCESSING:
The commercial packaging and processing of agricultural crops, animals, and their byproducts. Packing and procession operations are not limited to agricultural commodities grown on premises or in the immediate area. Typical uses include grain and fruit processing facilities, potato processing plants, canneries, slaughter and packinghouses.

AGRICULTURAL SUPPLIES AND SERVICES:
Establishments where more than fifty percent of business is directed to wholesale and retail trade and incidental storage of agricultural products and services such as feed, fertilizers, seed, irrigation and small equipment. Typical uses include feed and grain stores.

AGRICULTURAL WASTE PROCESSING:
Facilities and operations primarily engaged in the collection, processing, reuse, and/or disposal of agricultural animal waste or similar by-products of agricultural operations such as animal parts, tallow, manure, or crop residue.

AIRPORT ELEVATION:
The highest point of an airport's usable landing area measured in feet above mean sea level.

ORD. 45.2		Adopted February 16, 1984	Repealed April 3, 1986
ORD. 45.6	Art. 11.002	Amend April 3, 1986	Repealed March 26, 1987
ORD. 45.9	Art. 11.002	Amend March 26, 1987	Repealed August 15, 1990
ORD. 45.17	**Updated Full KCLDC**	**Adopt August 15, 1990**	
ORD. 45.20	Art. 446.003(20)(a) to Art. 11	Amend June 5, 1991	
ORD. 45.23		Amend June 5, 1991	
ORD. 45.24		Amend October 9, 1991	
ORD. 45.27		Amend April 8, 1992	Repealed February 15, 1995
ORD. 45.31		Adopt February 15, 1995	
ORD. 45.34		Amend May 24, 1996	
ORD. 45.35		Amend September 22, 1997	
ORD. 45.36		Amend November 10, 1998	
ORD. 45.36(B)		Amend December 8, 1998	
ORD. 45.36(C)		Amend February 11, 1999	
ORD. 45.38		Amend January 31, 2002	
ORD. 45.41		Amend January 31, 2002	
ORD. 45.44		Amend January 31, 2002	
ORD. 45.68	Art. 11	Amend April 18, 2008	Acknowledged May 12, 2008
ORD. 45.92		Adopt January 30, 2012	
ORD. 44.99		Adopt May 27, 2014	
ORD. 45.84		Adopt March 31, 2015	

AIRPORT HAZARD:
Any structure or object of natural growth located on or in the vicinity of a public airport, or any use of land near such airport, which obstructs the airspace required for the flight of aircraft in landing or takeoff at such airport or is otherwise hazardous to such landing or takeoff of aircraft.

AISLE:
An access way to required vehicular parking spaces within a parking lot.

ANIMAL COMPANION:
Animals that are typically kept for non-consumptive and non-commercial purposes. Examples include dogs, cats, pygmy goats, potbelly pigs and small birds such as parrots. For such animals only a total of four may be kept at one time per property except for cats and birds where a total of eight are allowed.

ANIMAL, LARGE:
Cattle, horses, sheep, goats, pigs, emus, ostrich, llamas and bison of any age, raised and kept for primarily personal purposes.

ANIMAL, SMALL:
Rabbits, chickens, ducks, geese or other fowl and similar animals raised and kept for personal consumptive purposes. "Small animal" does not include dogs or cats kept for personal companion purposes.

ANIMAL, SPECIALTY:
Any game mammal, fur-bearing mammal or game bird as defined by ORS 496.004, or any exotic, non-native, or potentially dangerous animal raised and kept for primarily personal purposes.

ARCHAEOLOGICAL RESOURCES:
Those districts, sites, buildings, structures and artifacts which possess material evidence of human life and culture of the prehistoric and historic past.

ORD. 45.2		Adopted February 16, 1984	Repealed April 3, 1986
ORD. 45.6	Art. 11.002	Amend April 3, 1986	Repealed March 26, 1987
ORD. 45.9	Art. 11.002	Amend March 26, 1987	Repealed August 15, 1990
ORD. 45.17	**Updated Full KCLDC**	**Adopt August 15, 1990**	
ORD. 45.20	Art. 446.003(20)(a) to Art. 11	Amend June 5, 1991	
ORD. 45.23		Amend June 5, 1991	
ORD. 45.24		Amend October 9, 1991	
ORD. 45.27		Amend April 8, 1992	Repealed February 15, 1995
ORD. 45.31		Adopt February 15, 1995	
ORD. 45.34		Amend May 24, 1996	
ORD. 45.35		Amend September 22, 1997	
ORD. 45.36		Amend November 10, 1998	
ORD. 45.36(B)		Amend December 8, 1998	
ORD. 45.36(C)		Amend February 11, 1999	
ORD. 45.38		Amend January 31, 2002	
ORD. 45.41		Amend January 31, 2002	
ORD. 45.44		Amend January 31, 2002	
ORD. 45.68	Art. 11	Amend April 18, 2008	Acknowledged May 12, 2008
ORD. 45.92		Adopt January 30, 2012	
ORD. 44.99		Adopt May 27, 2014	
ORD. 45.84		Adopt March 31, 2015	

ARCHITECTURAL FEATURE:
Openwork fences, open-air grills, decorative façade, which may or may not be attached to the main building, and may project therefrom. This does not include patios.

AREA:
That area of a lot, parcel, unit of land or tract, exclusive of:

(a) Public alleys, highways or roads, or

(b) Proposed public facilities such as alleys, highways, roads or other necessary public sites when included within a proposed development project.

AREA OF SHALLOW FLOODING:
A designated AO, AH, or VO zone on a community's Flood Insurance Rate Map (FIRM) with a one percent or greater annual chance of flooding to an average depth of one to three feet, where a clearly defined channel does not exist, where the path of flooding is unpredictable and where velocity flow may be evident. Such flooding is characterized by ponding or sheet flow.

AREA OF SPECIAL FLOOD HAZARD:
The land in the Flood Plain within a community subject to a one percent or greater chance of flooding in any given year. Designation on FIRM maps always include the letters A or V.

ARTERIAL STREET:
Streets, which bring traffic to and from freeways, serve major movements of traffic within or through urban areas, and which serve important rural routes.

ORD. 45.2		Adopted February 16, 1984	Repealed April 3, 1986
ORD. 45.6	Art. 11.002	Amend April 3, 1986	Repealed March 26, 1987
ORD. 45.9	Art. 11.002	Amend March 26, 1987	Repealed August 15, 1990
ORD. 45.17	**Updated Full KCLDC**	**Adopt August 15, 1990**	
ORD. 45.20	Art. 446.003(20)(a) to Art. 11	Amend June 5, 1991	
ORD. 45.23		Amend June 5, 1991	
ORD. 45.24		Amend October 9, 1991	
ORD. 45.27		Amend April 8, 1992	Repealed February 15, 1995
ORD. 45.31		Adopt February 15, 1995	
ORD. 45.34		Amend May 24, 1996	
ORD. 45.35		Amend September 22, 1997	
ORD. 45.36		Amend November 10, 1998	
ORD. 45.36(B)		Amend December 8, 1998	
ORD. 45.36(C)		Amend February 11, 1999	
ORD. 45.38		Amend January 31, 2002	
ORD. 45.41		Amend January 31, 2002	
ORD. 45.44		Amend January 31, 2002	
ORD. 45.68	Art. 11	Amend April 18, 2008	Acknowledged May 12, 2008
ORD. 45.92		Adopt January 30, 2012	
ORD. 44.99		Adopt May 27, 2014	
ORD. 45.84		Adopt March 31, 2015	

AUTO AND LIGHT EQUIPMENT SALES/RENTALS/SERVICE:
Establishments for the wholesale and retail sale, lease, rental, service, and incidental storage of automobiles, light-duty noncommercial trucks, motorcycle, boats, recreational vehicles, and noncommercial trailers. Typical uses include car dealerships, car rental agencies, and recreation vehicle sales and service.

AUTO REPAIRS:
Repair of automobiles, light-duty noncommercial trucks, motorcycles, recreational vehicles, and the sale, installation and servicing of automobile equipment and parts. Typical uses include auto body repairs and painting, service garages, muffler shops, auto glass shops, and tire, battery and accessory stores.

AUTO SERVICE STATION:
Establishments or places of business primarily engaged in the retail sale of petroleum products along with the incidental sale of tires, batteries, replacement items, grocery/convenience items, and the provision of minor repair services. Typical uses include automobile filling or service stations.

AUTO WRECKING YARD:
Property where motor vehicles or parts thereof, are maintained outdoors in an unlicensed, uninsured, wrecked, dismantled, and/or disassembled condition. Auto wrecking yard shall not include the incidental storage of inoperable or disabled vehicles in conjunction with the operation of an auto or equipment repair service or fleet storage yard. Auto wrecking yards must be licensed by the State Department of Motor Vehicles.

AUXILIARY:
A use or alteration of a structure or land which provides help or is directly associated with the conduct of the primary use of the property. An auxiliary use or structure is located on-site, is temporary in nature, and is to be removed when a particular practice or function has been completed.

ORD. 45.2		Adopted February 16, 1984	Repealed April 3, 1986
ORD. 45.6	Art. 11.002	Amend April 3, 1986	Repealed March 26, 1987
ORD. 45.9	Art. 11.002	Amend March 26, 1987	Repealed August 15, 1990
ORD. 45.17	**Updated Full KCLDC**	**Adopt August 15, 1990**	
ORD. 45.20	Art. 446.003(20)(a) to Art. 11	Amend June 5, 1991	
ORD. 45.23		Amend June 5, 1991	
ORD. 45.24		Amend October 9, 1991	
ORD. 45.27		Amend April 8, 1992	Repealed February 15, 1995
ORD. 45.31		Adopt February 15, 1995	
ORD. 45.34		Amend May 24, 1996	
ORD. 45.35		Amend September 22, 1997	
ORD. 45.36		Amend November 10, 1998	
ORD. 45.36(B)		Amend December 8, 1998	
ORD. 45.36(C)		Amend February 11, 1999	
ORD. 45.38		Amend January 31, 2002	
ORD. 45.41		Amend January 31, 2002	
ORD. 45.44		Amend January 31, 2002	
ORD. 45.68	Art. 11	Amend April 18, 2008	Acknowledged May 12, 2008
ORD. 45.92		Adopt January 30, 2012	
ORD. 44.99		Adopt May 27, 2014	
ORD. 45.84		Adopt March 31, 2015	

BASE FLOOD:
The flood having a one percent chance of being equaled or exceeded in any given year. Designation on FIRM maps always includes the letters A or V.

BASEMENT:
That portion of a building between floor and ceiling which is partly below and partly above grade, but so located that the vertical distance from grade to the floor below is less than the vertical distance from grade to ceiling. For floodplain management purposes, means an area of the building having its floor sub-grade (below ground level) on all sides.

BED AND BREAKFAST:
Uses and facilities accessory and subordinate to residential dwellings that provide traveler room and board for a fee on a daily or weekly room rental basis. Each such facility shall not accommodate more than ten travelers at any one time, nor shall a party's length of stay exceed fourteen consecutive days.

BUILDING AND GARDEN SALES:
Retail sales directed to contractors and home owners offering materials and supplies for construction and home improvement such as lumber and hardware supplies, fixtures, garden supplies and nursery stock. Typical uses include lumberyards, plumbing and electrical stores, paint and hardware stores, and plant nurseries.

BUILDING HEIGHT:
The vertical distance from the grade plane to the average height of the highest roof surface. For the purpose of determining the height limits of all airport hazard zones set forth in the Land Development Code and shown on the Airport Hazard Zoning Map, the datum shall be mean sea level elevation unless otherwise specified.

ORD. 45.2		Adopted February 16, 1984	Repealed April 3, 1986
ORD. 45.6	Art. 11.002	Amend April 3, 1986	Repealed March 26, 1987
ORD. 45.9	Art. 11.002	Amend March 26, 1987	Repealed August 15, 1990
ORD. 45.17	**Updated Full KCLDC**	**Adopt August 15, 1990**	
ORD. 45.20	Art. 446.003(20)(a) to Art. 11	Amend June 5, 1991	
ORD. 45.23		Amend June 5, 1991	
ORD. 45.24		Amend October 9, 1991	
ORD. 45.27		Amend April 8, 1992	Repealed February 15, 1995
ORD. 45.31		Adopt February 15, 1995	
ORD. 45.34		Amend May 24, 1996	
ORD. 45.35		Amend September 22, 1997	
ORD. 45.36		Amend November 10, 1998	
ORD. 45.36(B)		Amend December 8, 1998	
ORD. 45.36(C)		Amend February 11, 1999	
ORD. 45.38		Amend January 31, 2002	
ORD. 45.41		Amend January 31, 2002	
ORD. 45.44		Amend January 31, 2002	
ORD. 45.68	Art. 11	Amend April 18, 2008	Acknowledged May 12, 2008
ORD. 45.92		Adopt January 30, 2012	
ORD. 44.99		Adopt May 27, 2014	
ORD. 45.84		Adopt March 31, 2015	

BUILDING SETBACK LINE:
The minimum distance required between the property line of a lot or parcel of land and any point of the vertical wall of a building or structure, exclusive of those architectural features permitted to extend into yards or open spaces.

CAMPGROUND:
Generally, an area of land or water maintained, intended, or used for the purpose of supplying temporary or overnight living accommodations for public or private use, by providing designated areas for the placement of trailers, tents, yurts, buses, automobiles or sleeping bags, recreational vehicles, or other types of shelter and may include buildings to provide services to the patrons, such as, restrooms, bathing, laundry, and commissary facilities. Campgrounds may be either public or private.

CAMPGROUND ACCESSORIES:
Any portable, demountable or permanent structure or building, located within a public or private campground, intended for use by visitors and employees. Campground accessories include, but are not limited to, restrooms, laundry, bathing and sanitation facilities, picnic shelters, play areas and structures, and other amenities or support facilities.

CAMPING:
The occupancy of private property within a tent, tent-trailer, shelter, vehicle, or recreation vehicle not within an authorized/designated camping facility.

CARPORT:
A stationary structure consisting of a roof with its supports and not more than one wall or storage cabinet substituting for a wall, used for sheltering a motor vehicle.

ORD. 45.2		Adopted February 16, 1984	Repealed April 3, 1986
ORD. 45.6	Art. 11.002	Amend April 3, 1986	Repealed March 26, 1987
ORD. 45.9	Art. 11.002	Amend March 26, 1987	Repealed August 15, 1990
ORD. 45.17	**Updated Full KCLDC**	**Adopt August 15, 1990**	
ORD. 45.20	Art. 446.003(20)(a) to Art. 11	Amend June 5, 1991	
ORD. 45.23		Amend June 5, 1991	
ORD. 45.24		Amend October 9, 1991	
ORD. 45.27		Amend April 8, 1992	Repealed February 15, 1995
ORD. 45.31		Adopt February 15, 1995	
ORD. 45.34		Amend May 24, 1996	
ORD. 45.35		Amend September 22, 1997	
ORD. 45.36		Amend November 10, 1998	
ORD. 45.36(B)		Amend December 8, 1998	
ORD. 45.36(C)		Amend February 11, 1999	
ORD. 45.38		Amend January 31, 2002	
ORD. 45.41		Amend January 31, 2002	
ORD. 45.44		Amend January 31, 2002	
ORD. 45.68	Art. 11	Amend April 18, 2008	Acknowledged May 12, 2008
ORD. 45.92		Adopt January 30, 2012	
ORD. 44.99		Adopt May 27, 2014	
ORD. 45.84		Adopt March 31, 2015	

CEMETERY:
Land used or intended to be used for the burial or internment of the dead and dedicated for cemetery purposes. Cemetery includes columbarium, crematories and mausoleums and may include mortuaries and chapels when operated in conjunction with and within the boundary of such cemetery.

CHURCH:
Facilities for public religious assembly such as customarily occurs in churches, synagogues and temples, but does not include parochial schools.

CLASS I STREAMS:
Waters which, are significant for domestic use, angling, water dependent recreation or the spawning, rearing or migration of game fish, and includes the water itself, any vegetation, aquatic life, habitats, and the beds and banks below the normal high water level which may contain water, whether or not water is actually present.

COLLECTOR STREET:
Streets which serve internal traffic movement within an area such as a subdivision, and connect to arterial streets.

COMMERCIAL AGRICULTURAL ENTERPRISE:
Consists of farm operations which will contribute in a substantial way to the area's existing agricultural economy, help maintain agricultural processors and established farm markets, not only what is produced, but how much and how it is marketed shall be considered.

COMMERCIAL STABLE:
Commercial operations for the boarding, breeding, raising and training of horses or llamas, but does not include an animal defined or classified as a specialty animal.

ORD. 45.2		Adopted February 16, 1984	Repealed April 3, 1986
ORD. 45.6	Art. 11.002	Amend April 3, 1986	Repealed March 26, 1987
ORD. 45.9	Art. 11.002	Amend March 26, 1987	Repealed August 15, 1990
ORD. 45.17	**Updated Full KCLDC**	**Adopt August 15, 1990**	
ORD. 45.20	Art. 446.003(20)(a) to Art. 11	Amend June 5, 1991	
ORD. 45.23		Amend June 5, 1991	
ORD. 45.24		Amend October 9, 1991	
ORD. 45.27		Amend April 8, 1992	Repealed February 15, 1995
ORD. 45.31		Adopt February 15, 1995	
ORD. 45.34		Amend May 24, 1996	
ORD. 45.35		Amend September 22, 1997	
ORD. 45.36		Amend November 10, 1998	
ORD. 45.36(B)		Amend December 8, 1998	
ORD. 45.36(C)		Amend February 11, 1999	
ORD. 45.38		Amend January 31, 2002	
ORD. 45.41		Amend January 31, 2002	
ORD. 45.44		Amend January 31, 2002	
ORD. 45.68	Art. 11	Amend April 18, 2008	Acknowledged May 12, 2008
ORD. 45.92		Adopt January 30, 2012	
ORD. 44.99		Adopt May 27, 2014	
ORD. 45.84		Adopt March 31, 2015	

COMMON AREA:
An area (which may or may not meet the minimum lot/parcel size) that is created on a subdivision, partition or condominium plat for the sole purpose as stated in the declaration.

COMMUNITY ASSEMBLY:
Recreational, social, fraternal multipurpose facilities or buildings owned and operated by a governmental agency or nonprofit community organization.

COMMUNITY PARK:
Uses and facilities for public recreation within a neighborhood or community setting.

COMPATIBLE:
Capable of existing harmoniously, in agreement, or that which can be mixed without seriously interfering with another activity or use.

CONDOMINIUM:
An estate in real estate property consisting of an individual interest in common in a portion of real property together with a separate interest in space for residential, commercial, industrial or other purposes. A condominium may include, in addition, a separate interest in other portions of such real property.

CREATION DATE:
The recordation date of a document that creates a lot(s) or parcel(s), or the date of execution of an unrecorded land sale contract, deed, or other instrument intended to create new lots or parcels. In resource zones, when a lot, parcel, unit of land or tract is reconfigured pursuant to applicable law after November 4, 1993, the effect being to qualify a lot, parcel or tract for the dwelling site, the date of reconfiguration is the date of creation.

ORD. 45.2		Adopted February 16, 1984	Repealed April 3, 1986
ORD. 45.6	Art. 11.002	Amend April 3, 1986	Repealed March 26, 1987
ORD. 45.9	Art. 11.002	Amend March 26, 1987	Repealed August 15, 1990
ORD. 45.17	**Updated Full KCLDC**	**Adopt August 15, 1990**	
ORD. 45.20	Art. 446.003(20)(a) to Art. 11	Amend June 5, 1991	
ORD. 45.23		Amend June 5, 1991	
ORD. 45.24		Amend October 9, 1991	
ORD. 45.27		Amend April 8, 1992	Repealed February 15, 1995
ORD. 45.31		Adopt February 15, 1995	
ORD. 45.34		Amend May 24, 1996	
ORD. 45.35		Amend September 22, 1997	
ORD. 45.36		Amend November 10, 1998	
ORD. 45.36(B)		Amend December 8, 1998	
ORD. 45.36(C)		Amend February 11, 1999	
ORD. 45.38		Amend January 31, 2002	
ORD. 45.41		Amend January 31, 2002	
ORD. 45.44		Amend January 31, 2002	
ORD. 45.68	Art. 11	Amend April 18, 2008	Acknowledged May 12, 2008
ORD. 45.92		Adopt January 30, 2012	
ORD. 44.99		Adopt May 27, 2014	
ORD. 45.84		Adopt March 31, 2015	

CUL-DE-SAC:
A short street with one end open to traffic and terminated at the other end by a vehicle turnaround.

CULTURAL SERVICES:
Governmental or nonprofit facilities for the preservation and exhibition of objects of permanent interest in one or more of the arts, sciences or humanities. Typical uses include exhibition halls, galleries, museums, and libraries.

CULTURED CHRISTMAS TREE:
Means trees: (a) Grown on lands used exclusively for that purpose, capable of preparation by intensive cultivation methods such as plowing or turning over the soil; (b) Of a species for which the Department of Revenue requires a "Report of Christmas Trees Harvested" for purposes of ad valorem taxation; (c) Managed to produce trees meeting U.S. No. 2 or better standards for Christmas trees as specified by the Agriculture Marketing Services of the United States Department of Agriculture; and (d) Evidencing of periodic maintenance of practices of sheering for Douglas fir and pine species, weed and brush control and one or more of the following practices: Basal pruning, fertilizing, insect and disease control, stump culture, soil cultivation, irrigation.

CURRENT EMPLOYMENT FOR FARM USE:
(A) Farmland, the operation or use of which is subject to any farm-related government program; (B) Land lying fallow for one year as a normal and regular requirement of good agricultural husbandry; (C) Land planted in orchards or other perennial, other than land specified in subparagraph (D) of this paragraph, prior to maturity; (D) Land not in an exclusive farm use zone which has not been eligible for assessment at special farm use value in the year prior to planting the current crop and has been planted in orchards, cultured Christmas trees or vineyards for at least three years; (E) Wasteland in an exclusive farm use zone, dry or covered with water, neither economically tillable nor grazeable, lying in or adjacent to and in common ownership with a farm use land and which is not currently being used for any economic farm use; (F) Land under buildings supporting accepted farm practices; (G) Water impoundment's lying in or

ORD. 45.2		Adopted February 16, 1984	Repealed April 3, 1986
ORD. 45.6	Art. 11.002	Amend April 3, 1986	Repealed March 26, 1987
ORD. 45.9	Art. 11.002	Amend March 26, 1987	Repealed August 15, 1990
ORD. 45.17	**Updated Full KCLDC**	**Adopt August 15, 1990**	
ORD. 45.20	Art. 446.003(20)(a) to Art. 11	Amend June 5, 1991	
ORD. 45.23		Amend June 5, 1991	
ORD. 45.24		Amend October 9, 1991	
ORD. 45.27		Amend April 8, 1992	Repealed February 15, 1995
ORD. 45.31		Adopt February 15, 1995	
ORD. 45.34		Amend May 24, 1996	
ORD. 45.35		Amend September 22, 1997	
ORD. 45.36		Amend November 10, 1998	
ORD. 45.36(B)		Amend December 8, 1998	
ORD. 45.36(C)		Amend February 11, 1999	
ORD. 45.38		Amend January 31, 2002	
ORD. 45.41		Amend January 31, 2002	
ORD. 45.44		Amend January 31, 2002	
ORD. 45.68	Art. 11	Amend April 18, 2008	Acknowledged May 12, 2008
ORD. 45.92		Adopt January 30, 2012	
ORD. 44.99		Adopt May 27, 2014	
ORD. 45.84		Adopt March 31, 2015	

adjacent to and in common ownership with farm use land; (H) Any land constituting a wood-lot, not to exceed 20 acres, contiguous to and owned by the owner of land specifically valued at true cash value for farm use even if the land constituting the wood-lot is not utilized in conjunction with farm use; (I) Land lying idle for no more than one year where the absence of farming activity is due to the illness of the farmer or member of the farmers immediate family. For purposes of this paragraph, illness includes injury or infirmity whether or not such injury results in death; and (J) Any land described under ORS 32.267(I)(3).

CUSTOM MANUFACTURING:
Establishments and uses primarily engaged in on-site production of goods involving hand tools and minor mechanical means, with incidental direct sales of products produced on-site to members of the general public.

DATE OF CREATION AND EXISTENCE:
When a lot, parcel or tract is reconfigured pursuant to applicable law after November 4, 1993, the effect of which is to qualify a lot, parcel or tract for the siting of a dwelling, the date of the reconfiguration is the date of creation or existence. Reconfiguration means any change in the boundary of the lot, parcel or tract.

DESTINATION RESORT:
A self-contained development that provides for visitor-oriented accommodations and developed recreational facilities in a setting with high natural amenities. Destination Resorts must meet the minimum statutory standards of development, as provided in ORS 197.435-467.

ORD. 45.2		Adopted February 16, 1984	Repealed April 3, 1986
ORD. 45.6	Art. 11.002	Amend April 3, 1986	Repealed March 26, 1987
ORD. 45.9	Art. 11.002	Amend March 26, 1987	Repealed August 15, 1990
ORD. 45.17 Updated Full KCLDC		**Adopt August 15, 1990**	
ORD. 45.20	Art. 446.003(20)(a) to Art. 11	Amend June 5, 1991	
ORD. 45.23		Amend June 5, 1991	
ORD. 45.24		Amend October 9, 1991	
ORD. 45.27		Amend April 8, 1992	Repealed February 15, 1995
ORD. 45.31		Adopt February 15, 1995	
ORD. 45.34		Amend May 24, 1996	
ORD. 45.35		Amend September 22, 1997	
ORD. 45.36		Amend November 10, 1998	
ORD. 45.36(B)		Amend December 8, 1998	
ORD. 45.36(C)		Amend February 11, 1999	
ORD. 45.38		Amend January 31, 2002	
ORD. 45.41		Amend January 31, 2002	
ORD. 45.44		Amend January 31, 2002	
ORD. 45.68 Art. 11		Amend April 18, 2008	Acknowledged May 12, 2008
ORD. 45.92		Adopt January 30, 2012	
ORD. 44.99		Adopt May 27, 2014	
ORD. 45.84		Adopt March 31, 2015	

DEVELOP:
To bring about growth or availability, to construct or alter a structure, to conduct a mining operation, to make a physical change in the use or appearance of land, to divide land into parcels, or to create or terminate rights to access.

DEVELOPMENT:
Any man-made change to improved or unimproved real estate, including wetlands, riparian areas and open waters, including but not limited to buildings or other structures mining, dredging, filling, grading, paving excavation or drilling operations or storage of equipment or materials.

DEVELOPMENT PERMIT:
Any approval required under this code for the purpose of developing property, including but not limited to site plan approval, temporary use permit, conditional use permit, partition or subdivision approval, planned unit development, final development permit for a destination resort, or mobile home park approval.

DISCRETE LOT OR PARCEL:
A unit of land lawfully created by a subdivision or partition plat which established the lot or parcel as a separate or individual unit of land from other contiguous units of land in the same ownership.

DISPOSAL SITE:
Land and facilities used for the disposal, handling, or transfer of, or resource recovery from solid waste, including but not limited to dumps, landfills, sludge lagoons, sludge treatment facilities, disposal sites for septic tank pumping or cesspool cleaning service, transfer stations, resource recovery facilities, incinerators for solid waste delivered by public or by a solid waste collection service and composting plants; the term does not include a facility subject to the permit requirements of ORS 468.740; a landfill site which is used by the owner or person in control of the premises to dispose of soil, rock, concrete, or other similar non-decomposable material unless the site is used by the public either directly or through a solid waste collection service; or a site licensed pursuant to ORS 481.345.

ORD. 45.2		Adopted February 16, 1984	Repealed April 3, 1986
ORD. 45.6	Art. 11.002	Amend April 3, 1986	Repealed March 26, 1987
ORD. 45.9	Art. 11.002	Amend March 26, 1987	Repealed August 15, 1990
ORD. 45.17 Updated Full KCLDC		**Adopt August 15, 1990**	
ORD. 45.20	Art. 446.003(20)(a) to Art. 11	Amend June 5, 1991	
ORD. 45.23		Amend June 5, 1991	
ORD. 45.24		Amend October 9, 1991	
ORD. 45.27		Amend April 8, 1992	Repealed February 15, 1995
ORD. 45.31		Adopt February 15, 1995	
ORD. 45.34		Amend May 24, 1996	
ORD. 45.35		Amend September 22, 1997	
ORD. 45.36		Amend November 10, 1998	
ORD. 45.36(B)		Amend December 8, 1998	
ORD. 45.36(C)		Amend February 11, 1999	
ORD. 45.38		Amend January 31, 2002	
ORD. 45.41		Amend January 31, 2002	
ORD. 45.44		Amend January 31, 2002	
ORD. 45.68 Art. 11		Amend April 18, 2008	Acknowledged May 12, 2008
ORD. 45.92		Adopt January 30, 2012	
ORD. 44.99		Adopt May 27, 2014	
ORD. 45.84		Adopt March 31, 2015	

DUST SENSITIVE USE:
Real property normally used as a residence, school, church, hospital or similar use. Property used in industrial or agricultural activities is not "dust sensitive" unless it meets the above criteria in more than an incidental manner.

DUPLEX:
Residential uses involving two attached, common wall dwelling units for ownership, lease or rental on the same lot or parcel.

DWELLING:
A building, combination of buildings, or portions thereof, designed or used for human occupancy for residential purposes.

DWELLING UNIT:
A single unit providing complete, independent living facilities for one or more persons, including permanent provisions for living, sleeping, eating, cooking and sanitation purposes.

EASEMENT:
A grant of the right to use a portion of land for specific purposes.

EASTERN OREGON:
That portion of the state lying east of a line beginning at the intersection of the northern boundary of the State of Oregon and the western boundary of Wasco County, thence south along the western boundaries of the counties of Wasco, Jefferson, Deschutes and Klamath to the southern boundary of the State of Oregon.

ORD. 45.2		Adopted February 16, 1984	Repealed April 3, 1986
ORD. 45.6	Art. 11.002	Amend April 3, 1986	Repealed March 26, 1987
ORD. 45.9	Art. 11.002	Amend March 26, 1987	Repealed August 15, 1990
ORD. 45.17	**Updated Full KCLDC**	**Adopt August 15, 1990**	
ORD. 45.20	Art. 446.003(20)(a) to Art. 11	Amend June 5, 1991	
ORD. 45.23		Amend June 5, 1991	
ORD. 45.24		Amend October 9, 1991	
ORD. 45.27		Amend April 8, 1992	Repealed February 15, 1995
ORD. 45.31		Adopt February 15, 1995	
ORD. 45.34		Amend May 24, 1996	
ORD. 45.35		Amend September 22, 1997	
ORD. 45.36		Amend November 10, 1998	
ORD. 45.36(B)		Amend December 8, 1998	
ORD. 45.36(C)		Amend February 11, 1999	
ORD. 45.38		Amend January 31, 2002	
ORD. 45.41		Amend January 31, 2002	
ORD. 45.44		Amend January 31, 2002	
ORD. 45.68	Art. 11	Amend April 18, 2008	Acknowledged May 12, 2008
ORD. 45.92		Adopt January 30, 2012	
ORD. 44.99		Adopt May 27, 2014	
ORD. 45.84		Adopt March 31, 2015	

EMERGENCY SERVICES:
Facilities and services, which are devoted to public health and safety, including but not limited to fire houses and police stations.

ENHANCEMENT:
An action which, results in a long-term improvement of existing functional characteristics and processes that are not the result of a creation or restoration action.

ENTERTAINMENT FACILITIES:
Establishments or places primarily engaged in the indoor provision of cultural, entertainment or other events to spectators such as theaters or concert halls, and excluding those types of entertainment related facilities classified as extensive impact use types.

EQUINE FACILITY:
A building located on a farm which is used by the farm owner or the public for stabling or training equines, for riding lessons, or for training clinics. "Equine facility" does not mean a dwelling, or a structure in which more than 10 persons are present at any one time.

ESEE:
This acronym means the "economic, social, environmental and energy consequences" as defined in OAR 660-l6-005, that might result from prohibiting, restricting, or fully allowing a "conflicting" use. A conflicting use is one which, negatively impact or be negatively impacted by the Goal 5 resource.

ESSENTIAL SERVICES:
Facilities and services which are necessary and accessory to the principle land use or development, and involve infrastructure such as pipelines, power lines and poles, distribution feeders, meter boxes and pump-houses. Essential services may include, but are not limited to water, sewer, natural gas, cable and electric power service, and certain transportation improvements, as specified in Section 50.040.A.

ORD. 45.2		Adopted February 16, 1984	Repealed April 3, 1986
ORD. 45.6	Art. 11.002	Amend April 3, 1986	Repealed March 26, 1987
ORD. 45.9	Art. 11.002	Amend March 26, 1987	Repealed August 15, 1990
ORD. 45.17	**Updated Full KCLDC**	**Adopt August 15, 1990**	
ORD. 45.20	Art. 446.003(20)(a) to Art. 11	Amend June 5, 1991	
ORD. 45.23		Amend June 5, 1991	
ORD. 45.24		Amend October 9, 1991	
ORD. 45.27		Amend April 8, 1992	Repealed February 15, 1995
ORD. 45.31		Adopt February 15, 1995	
ORD. 45.34		Amend May 24, 1996	
ORD. 45.35		Amend September 22, 1997	
ORD. 45.36		Amend November 10, 1998	
ORD. 45.36(B)		Amend December 8, 1998	
ORD. 45.36(C)		Amend February 11, 1999	
ORD. 45.38		Amend January 31, 2002	
ORD. 45.41		Amend January 31, 2002	
ORD. 45.44		Amend January 31, 2002	
ORD. 45.68	Art. 11	Amend April 18, 2008	Acknowledged May 12, 2008
ORD. 45.92		Adopt January 30, 2012	
ORD. 44.99		Adopt May 27, 2014	
ORD. 45.84		Adopt March 31, 2015	

EXPLORATION:
For mining purposes, includes all activities conducted on or beneath the surface of the earth for the purpose of determining the presence, location, extent, grade or economic viability of a deposit. "Exploration" does not include prospecting or chemical processing of minerals.

EXPLOSIVE AND HAZARDOUS MATERIAL STORAGE:
Storage of any quantity of materials possessing an explosive, corrosive, noxious, toxic nature that represents potential danger to the public unless dealt with in a qualified, professional manner.

EXTENSIVE IMPACT SERVICES AND UTILITIES:
Any public or private facilities, services and utilities which may have a substantial impact on surrounding land uses. Typical uses include, but are not limited to: airports, detention and correction institutions, fairgrounds, disposal sites, incinerators, commercial power generating facilities, sports arenas and stadiums, outdoor theaters and amphitheaters, vehicular raceways, electrical transmission towers over 200 feet in height, commercial communication towers, recycle centers, natural gas or petroleum transmission pipelines, and certain transportation improvements, as specified in Section 50.040.B.

FAMILY:
An individual or two or more persons related by blood, marriage or law; or a group of not more than five persons (excluding servants) who need not be related by blood or marriage living together in a dwelling unit.

FARM:
As used in this code, "farm" is defined as land used for the primary purpose of raising, harvesting and selling of crops or by the feeding, breeding, management and sale of, or produce of, livestock, poultry, fur-bearing animals or honeybees or for dairying and the sale of dairy products or any other agricultural or horticultural use of animal husbandry or any combination thereof.

ORD. 45.2		Adopted February 16, 1984	Repealed April 3, 1986
ORD. 45.6	Art. 11.002	Amend April 3, 1986	Repealed March 26, 1987
ORD. 45.9	Art. 11.002	Amend March 26, 1987	Repealed August 15, 1990
ORD. 45.17	**Updated Full KCLDC**	**Adopt August 15, 1990**	
ORD. 45.20	Art. 446.003(20)(a) to Art. 11	Amend June 5, 1991	
ORD. 45.23		Amend June 5, 1991	
ORD. 45.24		Amend October 9, 1991	
ORD. 45.27		Amend April 8, 1992	Repealed February 15, 1995
ORD. 45.31		Adopt February 15, 1995	
ORD. 45.34		Amend May 24, 1996	
ORD. 45.35		Amend September 22, 1997	
ORD. 45.36		Amend November 10, 1998	
ORD. 45.36(B)		Amend December 8, 1998	
ORD. 45.36(C)		Amend February 11, 1999	
ORD. 45.38		Amend January 31, 2002	
ORD. 45.41		Amend January 31, 2002	
ORD. 45.44		Amend January 31, 2002	
ORD. 45.68	Art. 11	Amend April 18, 2008	Acknowledged May 12, 2008
ORD. 45.92		Adopt January 30, 2012	
ORD. 44.99		Adopt May 27, 2014	
ORD. 45.84		Adopt March 31, 2015	

FARM EQUIPMENT SALES/RENTAL/SERVICES:
Establishments for the wholesale and retail sale, lease, rental, service, and incidental storage of farm and agricultural equipment. Typical uses include farm implement and equipment dealers.

FARM UNIT:
A single farm unit may consist of any number of contiguous parcels or tax lots, including parcels or tax lots separated only by a road or highway, which are managed jointly as a single farm unit in a given area.

FARM USE:
The current employment of land for the primary purpose of obtaining a profit in money by raising, harvesting and selling crops or the feeding, breeding, management and sale of, or the produce of, livestock, poultry, fur-bearing animals or honeybees or for dairying and the sale of dairy products or any other agricultural or horticultural use or animal husbandry or any combination thereof. "Farm use" includes, but is not limited to; (a) the preparation, storage and disposal by marketing or otherwise of the products or by-products raised on such land for human or animal use; (b) the current employment of land for the primary purpose of obtaining a profit in money by stabling or training equines, including providing riding lessons, training clinics and schooling shows; (c) the propagation, cultivation, maintenance and harvesting of aquatic, bird and animal species that are under the jurisdiction of the State Fish and Wildlife Commission, to the extent allowed by the rules adopted by the commission, (d) other uses as set forth in ORS 215.203(2)(a).

FINAL DECISION: The date when the final written order for a decision reached under procedures prescribed by this code is mailed to affected or interested persons.

ORD. 45.2		Adopted February 16, 1984	Repealed April 3, 1986
ORD. 45.6	Art. 11.002	Amend April 3, 1986	Repealed March 26, 1987
ORD. 45.9	Art. 11.002	Amend March 26, 1987	Repealed August 15, 1990
ORD. 45.17	**Updated Full KCLDC**	**Adopt August 15, 1990**	
ORD. 45.20	Art. 446.003(20)(a) to Art. 11	Amend June 5, 1991	
ORD. 45.23		Amend June 5, 1991	
ORD. 45.24		Amend October 9, 1991	
ORD. 45.27		Amend April 8, 1992	Repealed February 15, 1995
ORD. 45.31		Adopt February 15, 1995	
ORD. 45.34		Amend May 24, 1996	
ORD. 45.35		Amend September 22, 1997	
ORD. 45.36		Amend November 10, 1998	
ORD. 45.36(B)		Amend December 8, 1998	
ORD. 45.36(C)		Amend February 11, 1999	
ORD. 45.38		Amend January 31, 2002	
ORD. 45.41		Amend January 31, 2002	
ORD. 45.44		Amend January 31, 2002	
ORD. 45.68	Art. 11	Amend April 18, 2008	Acknowledged May 12, 2008
ORD. 45.92		Adopt January 30, 2012	
ORD. 44.99		Adopt May 27, 2014	
ORD. 45.84		Adopt March 31, 2015	

FLEET STORAGE:
The temporary storage of operable motor vehicles for the purpose of regular business operations such as bus or delivery truck parking, heavy equipment storage yards, or for operations such as private tow-away and impound lots.

FLOOD OR FLOODING:
A general and temporary condition of partial or complete inundation of normally dry land areas from: (l) The overflow of inland or tidal waters; (2) The unusual and rapid accumulation of runoff of surface waters from any source; (3) Mud-slides (i.e. mudflows) which are proximately caused by flooding as defined above and are akin to a river of liquid and flowing mud on the surfaces of normally dry land areas, as when earth is carried by a current of water and deposited along the path of the current.

FLOOD FRINGE:
The area of the floodplain lying outside of the floodway, but subject to periodic inundation from flooding.

FLOOD INSURANCE RATE MAP (FIRM):
The official map on which the Federal Insurance Administration has delineated both the areas of special flood hazards and the risk premium zones applicable to the community.

FLOOD INSURANCE STUDY:
The official report provided by the Federal Insurance Administration that includes flood profiles, the Flood Boundary-Floodway Map, and the water surface elevation of the base flood.

FLOOD PLAIN OR FLOOD-PRONE AREA:
Means any land area susceptible to being inundated by water from any source.

ORD. 45.2		Adopted February 16, 1984	Repealed April 3, 1986
ORD. 45.6	Art. 11.002	Amend April 3, 1986	Repealed March 26, 1987
ORD. 45.9	Art. 11.002	Amend March 26, 1987	Repealed August 15, 1990
ORD. 45.17	**Updated Full KCLDC**	**Adopt August 15, 1990**	
ORD. 45.20	Art. 446.003(20)(a) to Art. 11	Amend June 5, 1991	
ORD. 45.23		Amend June 5, 1991	
ORD. 45.24		Amend October 9, 1991	
ORD. 45.27		Amend April 8, 1992	Repealed February 15, 1995
ORD. 45.31		Adopt February 15, 1995	
ORD. 45.34		Amend May 24, 1996	
ORD. 45.35		Amend September 22, 1997	
ORD. 45.36		Amend November 10, 1998	
ORD. 45.36(B)		Amend December 8, 1998	
ORD. 45.36(C)		Amend February 11, 1999	
ORD. 45.38		Amend January 31, 2002	
ORD. 45.41		Amend January 31, 2002	
ORD. 45.44		Amend January 31, 2002	
ORD. 45.68	Art. 11	Amend April 18, 2008	Acknowledged May 12, 2008
ORD. 45.92		Adopt January 30, 2012	
ORD. 44.99		Adopt May 27, 2014	
ORD. 45.84		Adopt March 31, 2015	

FLOOD PLAIN MANAGEMENT:
Means the operation of an overall program of corrective and preventative measures for reducing flood damage, including but not limited to emergency preparedness plans, flood control works and land development codes.

FLOOD PROOFING:
Means any combination of structural and non-structural additions, changes or adjustments to structures which reduce or eliminate flood damage to real estate or improved real property, water and sanitary facilities, structures and their contents.

FLOODWAY:
The channel of a river or other watercourse and the adjacent land areas that must be reserved in order to discharge the base flood without cumulatively increasing the water surface elevation more than one foot.

FLOOR AREA:
The total horizontal area of all floors of a building measured from the exterior surface of the outside walls including all floors below ground level.

FOOD AND BEVERAGE SALES:
Retail sales of groceries, beverages and household items. Typical uses include grocery stores, convenience stores, and bakeries.

FOOD AND BEVERAGE SERVICE:
Establishments or places of business primarily engaged in the sale of prepared food and beverages for on-premise consumption. Typical uses include restaurants, cafes, fast food outlets including drive-through or drive-in establishments, and taverns.

ORD. 45.2		Adopted February 16, 1984	Repealed April 3, 1986
ORD. 45.6	Art. 11.002	Amend April 3, 1986	Repealed March 26, 1987
ORD. 45.9	Art. 11.002	Amend March 26, 1987	Repealed August 15, 1990
ORD. 45.17	**Updated Full KCLDC**	**Adopt August 15, 1990**	
ORD. 45.20	Art. 446.003(20)(a) to Art. 11	Amend June 5, 1991	
ORD. 45.23		Amend June 5, 1991	
ORD. 45.24		Amend October 9, 1991	
ORD. 45.27		Amend April 8, 1992	Repealed February 15, 1995
ORD. 45.31		Adopt February 15, 1995	
ORD. 45.34		Amend May 24, 1996	
ORD. 45.35		Amend September 22, 1997	
ORD. 45.36		Amend November 10, 1998	
ORD. 45.36(B)		Amend December 8, 1998	
ORD. 45.36(C)		Amend February 11, 1999	
ORD. 45.38		Amend January 31, 2002	
ORD. 45.41		Amend January 31, 2002	
ORD. 45.44		Amend January 31, 2002	
ORD. 45.68	Art. 11	Amend April 18, 2008	Acknowledged May 12, 2008
ORD. 45.92		Adopt January 30, 2012	
ORD. 44.99		Adopt May 27, 2014	
ORD. 45.84		Adopt March 31, 2015	

FOREST OPERATION:
Any commercial activity relating to the growing or harvesting of any forest tree species.

FOREST PRACTICE:
Any operation conducted on or pertaining to forest land, including but not limited to reforestation of forest land, road construction and maintenance, harvesting of forest tree species, application of chemicals, and the disposal of slash.

FOREST USE:
The employment of land for the production of trees and the processing of forest products; for open space, buffers from noise, and visual separation of conflicting uses; watershed protection and wildlife and fisheries habitat; soil protection from wind and water; maintenance of clean air and water; outdoor recreational activities and related support services and wilderness values compatible with these uses; and grazing land for livestock.

FREEWAY:
A highway devoted to traffic movement with little or no land service function. Freeways are characterized by some degree of access control with few, if any, intersections at grade.

GARAGE:
Any building, with not less than 3 enclosed sides, which is used or intended to be used for automobile shelter or storage. When fronting on a dedicated street or alley, such building shall have a door or doors.

GENERAL MANUFACTURING:
Establishments, operations and uses engaged in the manufacturing, compounding, processing, assembling, packaging, treatment or fabrication of materials.

ORD. 45.2		Adopted February 16, 1984	Repealed April 3, 1986
ORD. 45.6	Art. 11.002	Amend April 3, 1986	Repealed March 26, 1987
ORD. 45.9	Art. 11.002	Amend March 26, 1987	Repealed August 15, 1990
ORD. 45.17	**Updated Full KCLDC**	**Adopt August 15, 1990**	
ORD. 45.20	Art. 446.003(20)(a) to Art. 11	Amend June 5, 1991	
ORD. 45.23		Amend June 5, 1991	
ORD. 45.24		Amend October 9, 1991	
ORD. 45.27		Amend April 8, 1992	Repealed February 15, 1995
ORD. 45.31		Adopt February 15, 1995	
ORD. 45.34		Amend May 24, 1996	
ORD. 45.35		Amend September 22, 1997	
ORD. 45.36		Amend November 10, 1998	
ORD. 45.36(B)		Amend December 8, 1998	
ORD. 45.36(C)		Amend February 11, 1999	
ORD. 45.38		Amend January 31, 2002	
ORD. 45.41		Amend January 31, 2002	
ORD. 45.44		Amend January 31, 2002	
ORD. 45.68	Art. 11	Amend April 18, 2008	Acknowledged May 12, 2008
ORD. 45.92		Adopt January 30, 2012	
ORD. 44.99		Adopt May 27, 2014	
ORD. 45.84		Adopt March 31, 2015	

GENERAL MERCHANDISE SALES:
Large-scale establishments engaged in retail sales of a variety of home and personal items. Typical uses include department stores, variety stores, discount department stores, and showroom/catalog stores.

GEOTHERMAL RESOURCE:
The natural heat of the earth, the energy, in whatever form, below the surface of the earth present in, resulting from, or created by, or which may be extracted from, the natural heat, and all minerals in solution or other products obtained from naturally heated fluids, brines, associated gasses, and steam, in whatever form, found below the surface of the earth, exclusive of helium or of oil, hydrocarbon gas or other hydrocarbon substances.

GROUND LEVEL:
The average level of the finished ground surface surrounding a building, measured at the center of all walls of the building.

GUEST RANCH:
A facility for overnight lodging incidental and accessory to an existing livestock operation that qualifies as a farm use under ORS 215.203. Guest ranch facilities may include a lodge, bunkhouse or cottage accommodations as well as passive recreational activities and food services.

HEAVY EQUIPMENT REPAIRS:
Repair of motor vehicles such as aircraft, heavy-duty and commercial trucks, and construction equipment, as well as the sale, installation, and servicing of equipment and parts together with body repairs. Typical uses include truck repair shops or motor freight maintenance operations.

ORD. 45.2		Adopted February 16, 1984	Repealed April 3, 1986
ORD. 45.6	Art. 11.002	Amend April 3, 1986	Repealed March 26, 1987
ORD. 45.9	Art. 11.002	Amend March 26, 1987	Repealed August 15, 1990
ORD. 45.17	**Updated Full KCLDC**	**Adopt August 15, 1990**	
ORD. 45.20	Art. 446.003(20)(a) to Art. 11	Amend June 5, 1991	
ORD. 45.23		Amend June 5, 1991	
ORD. 45.24		Amend October 9, 1991	
ORD. 45.27		Amend April 8, 1992	Repealed February 15, 1995
ORD. 45.31		Adopt February 15, 1995	
ORD. 45.34		Amend May 24, 1996	
ORD. 45.35		Amend September 22, 1997	
ORD. 45.36		Amend November 10, 1998	
ORD. 45.36(B)		Amend December 8, 1998	
ORD. 45.36(C)		Amend February 11, 1999	
ORD. 45.38		Amend January 31, 2002	
ORD. 45.41		Amend January 31, 2002	
ORD. 45.44		Amend January 31, 2002	
ORD. 45.68	Art. 11	Amend April 18, 2008	Acknowledged May 12, 2008
ORD. 45.92		Adopt January 30, 2012	
ORD. 44.99		Adopt May 27, 2014	
ORD. 45.84		Adopt March 31, 2015	

HEAVY EQUIPMENT SALES/RENTALS/SERVICE:
Establishments for the wholesale and retail sale, lease, rental, service, and incidental storage of heavy and commercial trucks, heavy construction equipment and aircraft. Typical uses include truck sales dealers or heavy construction equipment dealers.

HEAVY INDUSTRIAL:
Establishments, operations and uses engaged in the primary manufacturing and processing of raw materials and which may produce and omit objectionable odors or noises. Typical uses include sawmills, pulp and paper mills, concrete or asphalt batch plants, or steel and metal fabrication.

HIGH-VALUE FARMLAND:
Land in a tract composed predominantly (51% or more) of soils that, at the time the dwelling is approved for the tract are:

(a) Irrigated and classified prime, unique, Class I or Class II; or

(b) Not irrigated and classified prime, unique, Class I or Class II; or

(c) Shown to have grown specific perennials as demonstrated by the most recent aerial photography of the Agricultural Stabilization and Conservation Service of the United States Department of Agriculture taken prior to November 4, 1994. For the purposes of this section, "specified perennials" means perennials grown for market or research purposes including, but not limited to, nursery stock, berries, fruits, nuts, and Christmas trees or vineyards, but not including seed crops, hay, pasture or alfalfa.

HISTORICAL RESOURCES:
Those districts, sites, buildings, structures and artifacts, which have a relationship to events or conditions of the human past.

ORD. 45.2		Adopted February 16, 1984	Repealed April 3, 1986
ORD. 45.6	Art. 11.002	Amend April 3, 1986	Repealed March 26, 1987
ORD. 45.9	Art. 11.002	Amend March 26, 1987	Repealed August 15, 1990
ORD. 45.17	**Updated Full KCLDC**	**Adopt August 15, 1990**	
ORD. 45.20	Art. 446.003(20)(a) to Art. 11	Amend June 5, 1991	
ORD. 45.23		Amend June 5, 1991	
ORD. 45.24		Amend October 9, 1991	
ORD. 45.27		Amend April 8, 1992	Repealed February 15, 1995
ORD. 45.31		Adopt February 15, 1995	
ORD. 45.34		Amend May 24, 1996	
ORD. 45.35		Amend September 22, 1997	
ORD. 45.36		Amend November 10, 1998	
ORD. 45.36(B)		Amend December 8, 1998	
ORD. 45.36(C)		Amend February 11, 1999	
ORD. 45.38		Amend January 31, 2002	
ORD. 45.41		Amend January 31, 2002	
ORD. 45.44		Amend January 31, 2002	
ORD. 45.68	Art. 11	Amend April 18, 2008	Acknowledged May 12, 2008
ORD. 45.92		Adopt January 30, 2012	
ORD. 44.99		Adopt May 27, 2014	
ORD. 45.84		Adopt March 31, 2015	

HISTORIC SITE:
A location, structure or object having local, regional, statewide or national historic significance as indicated in the Klamath County Comprehensive Plan.

HOME DAY CARE:
A State-licensed facility that provides care to more than twelve children in the home of the day care provider, including a day nursery, nursery school, or similar operation, but not including facilities primarily for education or training in a specific subject such as athletics, dance, drama, music or religion; or a facility that is operated by a school district or governmental agency.

HOME FURNISHINGS AND APPLIANCES:
Retail establishments engaged in the sale of home furnishings such as furniture and appliances, floor coverings, fireplaces, and spas.

HOME OCCUPATION:
Home occupation refers to an occupation or enterprise carried on within a dwelling or accessory building for the financial gain by a member of the immediate family residing within the dwelling. The occupation must be ACCESSORY to the primary use of the home as a residence. Typical home occupations are professional services or crafts such as dressmaking, tutoring, music lessons, etc. Accessory uses shall not require internal or external modifications to the dwelling or accessory building or require the use of machinery, tools or equipment not associated with residential use.

HOSPITAL:
An institution providing physical or mental health services, inpatient or overnight accommodations, and medical or surgical care of the sick or injured.

HOTEL/MOTEL:
Lodging services involving the provision of room and/or board on the premises.

ORD. 45.2		Adopted February 16, 1984	Repealed April 3, 1986
ORD. 45.6	Art. 11.002	Amend April 3, 1986	Repealed March 26, 1987
ORD. 45.9	Art. 11.002	Amend March 26, 1987	Repealed August 15, 1990
ORD. 45.17	**Updated Full KCLDC**	**Adopt August 15, 1990**	
ORD. 45.20	Art. 446.003(20)(a) to Art. 11	Amend June 5, 1991	
ORD. 45.23		Amend June 5, 1991	
ORD. 45.24		Amend October 9, 1991	
ORD. 45.27		Amend April 8, 1992	Repealed February 15, 1995
ORD. 45.31		Adopt February 15, 1995	
ORD. 45.34		Amend May 24, 1996	
ORD. 45.35		Amend September 22, 1997	
ORD. 45.36		Amend November 10, 1998	
ORD. 45.36(B)		Amend December 8, 1998	
ORD. 45.36(C)		Amend February 11, 1999	
ORD. 45.38		Amend January 31, 2002	
ORD. 45.41		Amend January 31, 2002	
ORD. 45.44		Amend January 31, 2002	
ORD. 45.68	Art. 11	Amend April 18, 2008	Acknowledged May 12, 2008
ORD. 45.92		Adopt January 30, 2012	
ORD. 44.99		Adopt May 27, 2014	
ORD. 45.84		Adopt March 31, 2015	

IMPROVEMENTS:
Physical facilities and infrastructure, including but not limited to curbs, gutters, sidewalks, street lights, street signs, roadbed, road surface, storm drains and appurtenances, fire hydrants, sanitary sewers and appurtenances, and underground utilities.

INDOOR SPORTS AND RECREATION:
Establishments or places primarily engaged in the provision of sports or recreation by and for participants; spectators are typically incidental and on a nonrecurring basis. Typical uses include bowling alleys, skating rinks, firearm and archery ranges, sports and racket clubs.

IRRIGATED:
Watered by artificial or controlled means such as sprinklers, furrows, ditches or spreader dikes. An area or tract is "irrigated" if it is currently watered, or has established rights to use water for irrigation, including such tracts that receive water for irrigation from a water or irrigation district or other provider.

KENNEL:
A lot or building in which four or more dogs, cats, pot-bellied pigs or other small animals (excluding livestock) at least four months of age are kept commercially for board, breeding, training or sale.

LANDSCAPING:
The planning and maintenance of some combination of trees, shrubs, vines, ground covers, flowers or lawns. In addition, the combination or design may include natural features such as rock and stone and structural features, including but not limited to fountains, reflecting-pools, artworks, screens, walls, fences and benches.

ORD. 45.2		Adopted February 16, 1984	Repealed April 3, 1986
ORD. 45.6	Art. 11.002	Amend April 3, 1986	Repealed March 26, 1987
ORD. 45.9	Art. 11.002	Amend March 26, 1987	Repealed August 15, 1990
ORD. 45.17	**Updated Full KCLDC**	**Adopt August 15, 1990**	
ORD. 45.20	Art. 446.003(20)(a) to Art. 11	Amend June 5, 1991	
ORD. 45.23		Amend June 5, 1991	
ORD. 45.24		Amend October 9, 1991	
ORD. 45.27		Amend April 8, 1992	Repealed February 15, 1995
ORD. 45.31		Adopt February 15, 1995	
ORD. 45.34		Amend May 24, 1996	
ORD. 45.35		Amend September 22, 1997	
ORD. 45.36		Amend November 10, 1998	
ORD. 45.36(B)		Amend December 8, 1998	
ORD. 45.36(C)		Amend February 11, 1999	
ORD. 45.38		Amend January 31, 2002	
ORD. 45.41		Amend January 31, 2002	
ORD. 45.44		Amend January 31, 2002	
ORD. 45.68	Art. 11	Amend April 18, 2008	Acknowledged May 12, 2008
ORD. 45.92		Adopt January 30, 2012	
ORD. 44.99		Adopt May 27, 2014	
ORD. 45.84		Adopt March 31, 2015	

LAND USE DECISION:
A decision or determination that concerns the adoption, amendment or application of the Statewide Planning Goals, a Comprehensive Plan provision or a Land Development Code provision. "Land Use Decision" does not include a decision or determination made under land use standards that do not require judgment, or a decision or determination on a subdivision or land partition located within an urban growth boundary where the decision is consistent with clear and object standards, or a decision on a building permit which does not require interpretation or the exercise of factual, policy or legal judgment.

LARGE ANIMAL VETERINARY SERVICES:
Professional services primarily engaged in treating large animals such as cattle, horses, sheep, goats, pigs and llamas in connection with farm operations.

LAWFUL CREATION:
Any building, structure, use, lot, parcel, tract, or unit of land that complied with land use laws or regulations in effect at the time of its creation or establishment.

LAWFULLY ESTABLISHED UNIT OF LAND:
A lot or parcel created pursuant to ORS 92.010; or another unit of land created in compliance with all applicable planning, zoning and subdivision or partition ordinances or regulations in effect at the time of creation; or by deed or land sales contract, if there were no applicable planning, zoning or subdivision or partition ordinances in effect at the time of creation. "Lawfully established unit of land" does not include a unit of land created solely to establish a separate tax account for assessment purposes.

LOCAL STREET:
Streets which, provide access to individual adjacent lots, and connect to a collector street.

ORD. 45.2		Adopted February 16, 1984	Repealed April 3, 1986
ORD. 45.6	Art. 11.002	Amend April 3, 1986	Repealed March 26, 1987
ORD. 45.9	Art. 11.002	Amend March 26, 1987	Repealed August 15, 1990
ORD. 45.17	**Updated Full KCLDC**	**Adopt August 15, 1990**	
ORD. 45.20	Art. 446.003(20)(a) to Art. 11	Amend June 5, 1991	
ORD. 45.23		Amend June 5, 1991	
ORD. 45.24		Amend October 9, 1991	
ORD. 45.27		Amend April 8, 1992	Repealed February 15, 1995
ORD. 45.31		Adopt February 15, 1995	
ORD. 45.34		Amend May 24, 1996	
ORD. 45.35		Amend September 22, 1997	
ORD. 45.36		Amend November 10, 1998	
ORD. 45.36(B)		Amend December 8, 1998	
ORD. 45.36(C)		Amend February 11, 1999	
ORD. 45.38		Amend January 31, 2002	
ORD. 45.41		Amend January 31, 2002	
ORD. 45.44		Amend January 31, 2002	
ORD. 45.68	Art. 11	Amend April 18, 2008	Acknowledged May 12, 2008
ORD. 45.92		Adopt January 30, 2012	
ORD. 44.99		Adopt May 27, 2014	
ORD. 45.84		Adopt March 31, 2015	

LOT:
A single unit of land that is created by a subdivision of land.

LOT AREA:
The total area included within the lot lines of a lot or parcel of land.

LOT, CORNER:
A lot or parcel of land situated at the intersection of 2 or more streets and/or highways, which streets or highways have an angle of intersection, measured within said lot or parcel of land, of not more than 135 degrees.

LOT DEPTH:
The distance between the midpoints of the front and rear lot lines.

LOT, FLAG:
A unit of land whose main body is connected to a street, road, or easement with access to a street or road by a narrow strip of land.

LOT LINE, FRONT:
The lot line separating the lot from the street or in the case of a corner lot, a line separating the lot from the street on which the development or contemplated development will face.

LOT LINE, REAR:
A lot line which is opposite and most distant from the front lot line. For a triangular shaped lot, the rear lot line shall mean a line having a length of not less than l0 feet within the lot which is parallel to the front lot line, or parallel to the chord of a curved front lot line, and at the maximum distance from the front lot line.

LOT LINE, SIDE:
Any lot boundary line which, is not a front lot line or a rear lot line.

ORD. 45.2		Adopted February 16, 1984	Repealed April 3, 1986
ORD. 45.6	Art. 11.002	Amend April 3, 1986	Repealed March 26, 1987
ORD. 45.9	Art. 11.002	Amend March 26, 1987	Repealed August 15, 1990
ORD. 45.17	**Updated Full KCLDC**	**Adopt August 15, 1990**	
ORD. 45.20	Art. 446.003(20)(a) to Art. 11	Amend June 5, 1991	
ORD. 45.23		Amend June 5, 1991	
ORD. 45.24		Amend October 9, 1991	
ORD. 45.27		Amend April 8, 1992	Repealed February 15, 1995
ORD. 45.31		Adopt February 15, 1995	
ORD. 45.34		Amend May 24, 1996	
ORD. 45.35		Amend September 22, 1997	
ORD. 45.36		Amend November 10, 1998	
ORD. 45.36(B)		Amend December 8, 1998	
ORD. 45.36(C)		Amend February 11, 1999	
ORD. 45.38		Amend January 31, 2002	
ORD. 45.41		Amend January 31, 2002	
ORD. 45.44		Amend January 31, 2002	
ORD. 45.68	Art. 11	Amend April 18, 2008	Acknowledged May 12, 2008
ORD. 45.92		Adopt January 30, 2012	
ORD. 44.99		Adopt May 27, 2014	
ORD. 45.84		Adopt March 31, 2015	

LOT, SUBSTANDARD:
A lot whose area, width or depth is less than that required by the zone in which it is located.

LOT, DOUBLE FRONTAGE:
An interior lot having a frontage on 2 streets, roads or highways.

LOT WIDTH:
The distance between the side lot lines measured at right angles to the side lot lines measured at the front lot line.

LOWEST FLOOR:
The lowest floor of the lowest enclosed area (including basement). An unfinished or flood resistant enclosure, usable solely for parking of vehicles, building access or storage, in an area other than a basement area, is not considered a building's lowest floor, provided that such enclosure is not built so as to render the structure in violation of the applicable non-elevation design requirements of this code.

MAJOR HIGHWAY:
A principal travel route around or between cities or communities with controlled at-grade intersections.

MANUFACTURED DWELLING:
Defined under ORS 446.003(25)(a):

(a) Residential Trailer, a structure constructed for movement on the public highways that has sleeping, cooking and plumbing facilities, that is intended for human occupancy, that is being used for residential purposes and that was constructed before January 1, 1962.

(b) Mobile Home, a structure constructed for movement on the public highways that has sleeping, cooking and plumbing facilities, that is intended for human occupancy, that is being used for residential purposes and that was constructed between January 1, 1962 and June 15, 1976,

ORD. 45.2		Adopted February 16, 1984	Repealed April 3, 1986
ORD. 45.6	Art. 11.002	Amend April 3, 1986	Repealed March 26, 1987
ORD. 45.9	Art. 11.002	Amend March 26, 1987	Repealed August 15, 1990
ORD. 45.17	**Updated Full KCLDC**	**Adopt August 15, 1990**	
ORD. 45.20	Art. 446.003(20)(a) to Art. 11	Amend June 5, 1991	
ORD. 45.23		Amend June 5, 1991	
ORD. 45.24		Amend October 9, 1991	
ORD. 45.27		Amend April 8, 1992	Repealed February 15, 1995
ORD. 45.31		Adopt February 15, 1995	
ORD. 45.34		Amend May 24, 1996	
ORD. 45.35		Amend September 22, 1997	
ORD. 45.36		Amend November 10, 1998	
ORD. 45.36(B)		Amend December 8, 1998	
ORD. 45.36(C)		Amend February 11, 1999	
ORD. 45.38		Amend January 31, 2002	
ORD. 45.41		Amend January 31, 2002	
ORD. 45.44		Amend January 31, 2002	
ORD. 45.68	Art. 11	Amend April 18, 2008	Acknowledged May 12, 2008
ORD. 45.92		Adopt January 30, 2012	
ORD. 44.99		Adopt May 27, 2014	
ORD. 45.84		Adopt March 31, 2015	

and met the construction requirements of Oregon mobile home law in affect at the time of construction.

(c) Manufactured Home, a structure constructed for movement on the public highways that has sleeping, cooking and plumbing facilities, that is intended for human occupancy, that is being used for residential purposes and that was constructed in accordance with federal manufactured housing construction and safety standards regulations in effect at the time of construction.

MANUFACTURED/MOBILE HOME PARK:
Any place where four or more manufactured dwellings as defined in ORS 446.003 and Article 11 of the Klamath County Land Development Code are located within 500 feet of one another on a lot, tract, or parcel of land under the same ownership, the primary purpose of which is to rent space or keep space for rent to any person for a charge or fee paid or to be paid for the rental or use of the facilities or to offer space free in connection with securing the trade or patronage of such person. "Manufactured Home Park" does not include a lot or lots located within a subdivision being rented or leased for occupancy by no more than one manufactured dwelling per lot if the subdivision was approved by the local government unit having jurisdiction by ordinance.

MEDICAL SERVICES:
Private or public facilities for the provision of health care, treatment or rehabilitation of patients, either on and outpatient or residential basis. Uses may include necessary and accessory administrative, professional, maintenance, and transportation services. Typical uses include hospitals, clinics, and residential care facilities for more than 15 individuals.

ORD. 45.2		Adopted February 16, 1984	Repealed April 3, 1986
ORD. 45.6	Art. 11.002	Amend April 3, 1986	Repealed March 26, 1987
ORD. 45.9	Art. 11.002	Amend March 26, 1987	Repealed August 15, 1990
ORD. 45.17	**Updated Full KCLDC**	**Adopt August 15, 1990**	
ORD. 45.20	Art. 446.003(20)(a) to Art. 11	Amend June 5, 1991	
ORD. 45.23		Amend June 5, 1991	
ORD. 45.24		Amend October 9, 1991	
ORD. 45.27		Amend April 8, 1992	Repealed February 15, 1995
ORD. 45.31		Adopt February 15, 1995	
ORD. 45.34		Amend May 24, 1996	
ORD. 45.35		Amend September 22, 1997	
ORD. 45.36		Amend November 10, 1998	
ORD. 45.36(B)		Amend December 8, 1998	
ORD. 45.36(C)		Amend February 11, 1999	
ORD. 45.38		Amend January 31, 2002	
ORD. 45.41		Amend January 31, 2002	
ORD. 45.44		Amend January 31, 2002	
ORD. 45.68	Art. 11	Amend April 18, 2008	Acknowledged May 12, 2008
ORD. 45.92		Adopt January 30, 2012	
ORD. 44.99		Adopt May 27, 2014	
ORD. 45.84		Adopt March 31, 2015	

MINERALS:
Soil, coal, clay, stone, sand, gravel, metallic ore and any other solid material or substance excavated for commercial, industrial or construction use from natural deposits.

MINI-STORAGE FACILITY - OUTDOORS:
A business consisting of one or more structures which are divided into separate, enclosed units with individual accesses which are then rented, leased or sold to other entities for the primary purpose of storing goods or materials.

MINING:
All or any part of the process of mining by the removal of overburden and the extraction of natural mineral deposits thereby exposed by any method including open-pit mining operations, auger mining operations, processing surface impacts of underground mining, production of surface mining refuse and the construction of adjacent or off-site borrow pits except those constructed for use as access roads. "Mining" does not include excavations of sand, gravel, clay, rock or other similar materials conducted by a landowner or tenant on the property for the primary purpose of reconstruction or maintenance of access roads and excavation or grading operations conducted in the process of farming or cemetery operations, unswayed road construction or other unswayed construction, or non-surface impacts of underground mines.

MITIGATION:
The minimizing or offsetting of impacts by the provision of on or off-site improvement or compensation which benefits impacted property owners, resources, and the public interest. Mitigation measures include, but are not limited to, the provision of additional fish and wildlife habitat, conservation easements, on- or off-site screening and buffering, compensation for the maintenance of existing off-site screening, fees in lieu of improvements, and similar arrangements which are agreed to in writing by the affected parties, and which relate to and are necessitated by a surface mining development or operation.

ORD. 45.2		Adopted February 16, 1984	Repealed April 3, 1986
ORD. 45.6	Art. 11.002	Amend April 3, 1986	Repealed March 26, 1987
ORD. 45.9	Art. 11.002	Amend March 26, 1987	Repealed August 15, 1990
ORD. 45.17	**Updated Full KCLDC**	**Adopt August 15, 1990**	
ORD. 45.20	Art. 446.003(20)(a) to Art. 11	Amend June 5, 1991	
ORD. 45.23		Amend June 5, 1991	
ORD. 45.24		Amend October 9, 1991	
ORD. 45.27		Amend April 8, 1992	Repealed February 15, 1995
ORD. 45.31		Adopt February 15, 1995	
ORD. 45.34		Amend May 24, 1996	
ORD. 45.35		Amend September 22, 1997	
ORD. 45.36		Amend November 10, 1998	
ORD. 45.36(B)		Amend December 8, 1998	
ORD. 45.36(C)		Amend February 11, 1999	
ORD. 45.38		Amend January 31, 2002	
ORD. 45.41		Amend January 31, 2002	
ORD. 45.44		Amend January 31, 2002	
ORD. 45.68	Art. 11	Amend April 18, 2008	Acknowledged May 12, 2008
ORD. 45.92		Adopt January 30, 2012	
ORD. 44.99		Adopt May 27, 2014	
ORD. 45.84		Adopt March 31, 2015	

MULTIPLE FAMILY DWELLING:
Residential uses involving three or more attached, common wall dwelling units for individual ownership, lease or rental on the same lot or parcel. Typical uses include apartments, townhouses and condominiums.

NECESSARY:
A use or structure that will contribute substantially to the effective and efficient primary use of the property.

NEW CONSTRUCTION:
Means structures for which the start of construction commenced on or after the effective date of a flood plain management (land development code) adopted by a community and includes any subsequent improvements to such structures.

NONPRECISION INSTRUMENT RUNWAY:
A runway having an existing instrument approach procedure utilizing air navigation facilities with only horizontal guidance. It also means a runway for which a non-precision approach is planned and is so indicated on an FAA approved airport layout plan; a military service's approved military airport layout plan; any other FAA planning document, or military service's military airport planning document.

NUISANCE:
Anything that interferes with the use or enjoyment of property, endangers personal or public health or safety, or is offensive to the senses.

ORD. 45.2		Adopted February 16, 1984	Repealed April 3, 1986
ORD. 45.6	Art. 11.002	Amend April 3, 1986	Repealed March 26, 1987
ORD. 45.9	Art. 11.002	Amend March 26, 1987	Repealed August 15, 1990
ORD. 45.17 Updated Full KCLDC		**Adopt August 15, 1990**	
ORD. 45.20	Art. 446.003(20)(a) to Art. 11	Amend June 5, 1991	
ORD. 45.23		Amend June 5, 1991	
ORD. 45.24		Amend October 9, 1991	
ORD. 45.27		Amend April 8, 1992	Repealed February 15, 1995
ORD. 45.31		Adopt February 15, 1995	
ORD. 45.34		Amend May 24, 1996	
ORD. 45.35		Amend September 22, 1997	
ORD. 45.36		Amend November 10, 1998	
ORD. 45.36(B)		Amend December 8, 1998	
ORD. 45.36(C)		Amend February 11, 1999	
ORD. 45.38		Amend January 31, 2002	
ORD. 45.41		Amend January 31, 2002	
ORD. 45.44		Amend January 31, 2002	
ORD. 45.68 Art. 11		Amend April 18, 2008	Acknowledged May 12, 2008
ORD. 45.92		Adopt January 30, 2012	
ORD. 44.99		Adopt May 27, 2014	
ORD. 45.84		Adopt March 31, 2015	

OIL AND GAS:
Crude petroleum oil and all other hydrocarbons which are produced in liquid or by ordinary production methods, and all other natural gas and hydrocarbons that were originally in a gaseous phase in the reservoir.

OREGON FOREST PRACTICES ACT:
Oregon Revised Statutes 527.610 to 527.730 and 527.990

ORGANIZER:
Includes any individual who holds, stages or sponsors an Outdoor Mass Gathering, and the owner, lessee or possessor of the real property upon which the Outdoor Mass Gathering is to take place.

OUTDOOR ADVERTISING SIGN:
A sign which advertises goods, products or services which are not sold, manufactured or distributed on or from the premises on which the sign is located, or facilities not located on the premises on which the sign is located.

OUTDOOR MASS GATHERING:
A temporary and intermittent event whose actual or anticipated attendance will be 1,000 or more people at any one time during the duration of the event, is reasonably expected to last for at least twelve hours (including set-up and break down periods) but not more than 120 hours within any three month period, and will take place in a rural or resource zone not intended for public gatherings. Such an event would occur primarily in open space using temporary and/or permanent structures. Examples include outdoor concerts and similar special events that will attract large numbers of people.

OVERBURDEN:
Earth or rock that lies above a natural deposit of a mineral as defined in Article 11 of the Klamath County Land Development Code.

ORD. 45.2		Adopted February 16, 1984	Repealed April 3, 1986
ORD. 45.6	Art. 11.002	Amend April 3, 1986	Repealed March 26, 1987
ORD. 45.9	Art. 11.002	Amend March 26, 1987	Repealed August 15, 1990
ORD. 45.17 Updated Full KCLDC		**Adopt August 15, 1990**	
ORD. 45.20	Art. 446.003(20)(a) to Art. 11	Amend June 5, 1991	
ORD. 45.23		Amend June 5, 1991	
ORD. 45.24		Amend October 9, 1991	
ORD. 45.27		Amend April 8, 1992	Repealed February 15, 1995
ORD. 45.31		Adopt February 15, 1995	
ORD. 45.34		Amend May 24, 1996	
ORD. 45.35		Amend September 22, 1997	
ORD. 45.36		Amend November 10, 1998	
ORD. 45.36(B)		Amend December 8, 1998	
ORD. 45.36(C)		Amend February 11, 1999	
ORD. 45.38		Amend January 31, 2002	
ORD. 45.41		Amend January 31, 2002	
ORD. 45.44		Amend January 31, 2002	
ORD. 45.68 Art. 11		Amend April 18, 2008	Acknowledged May 12, 2008
ORD. 45.92		Adopt January 30, 2012	
ORD. 44.99		Adopt May 27, 2014	
ORD. 45.84		Adopt March 31, 2015	

OWNER:
The individual, firm, association, syndicate, partnership or corporation having proprietary interest in real property.

PARCEL:
A single unit of land created by: (1) a partition of land as defined in ORS 92.010 in compliance with all land use standards then applicable; or (2) deed or land sales contract, if there were no applicable land use or partitioning regulations then in effect. The term "parcel" does not include a unit of land created solely to establish a separate tax account for assessment purposes.

PARKING SERVICES:
Private or public facilities for temporary parking of automobiles in parking garages or lots and may involve a fee.

PARKING SPACE:
A readily accessible area, not including driveways, ramps, loading or work areas, maintained exclusively for the parking of l motor vehicle.

PARTITION:
To divide land into 2 or 3 parcels of land within a calendar year, but does not include: a division of land resulting from a lien foreclosure, foreclosure of a recorded contract for sale of real property or the creation of cemetery lots; or an adjustment of a property line by the relocation of a common boundary where an additional unit of land is not created and where the existing unit of land reduced in size by the adjustment complies with any applicable land development ordinance; or a sale or grant by a person to a public agency or public body for state highway, county road or other right-of-way purposes provide that such road or right-of-way complies with the Comprehensive Plan and ORS 215.283(2)(q) to (s). However, any property divided by the sale or grant of property for state highway, county road, city street or other right of way purposes shall continue to be considered a single unit of land until such time as the property is further subdivided or partitioned.

ORD. 45.2		Adopted February 16, 1984	Repealed April 3, 1986
ORD. 45.6	Art. 11.002	Amend April 3, 1986	Repealed March 26, 1987
ORD. 45.9	Art. 11.002	Amend March 26, 1987	Repealed August 15, 1990
ORD. 45.17	**Updated Full KCLDC**	**Adopt August 15, 1990**	
ORD. 45.20	Art. 446.003(20)(a) to Art. 11	Amend June 5, 1991	
ORD. 45.23		Amend June 5, 1991	
ORD. 45.24		Amend October 9, 1991	
ORD. 45.27		Amend April 8, 1992	Repealed February 15, 1995
ORD. 45.31		Adopt February 15, 1995	
ORD. 45.34		Amend May 24, 1996	
ORD. 45.35		Amend September 22, 1997	
ORD. 45.36		Amend November 10, 1998	
ORD. 45.36(B)		Amend December 8, 1998	
ORD. 45.36(C)		Amend February 11, 1999	
ORD. 45.38		Amend January 31, 2002	
ORD. 45.41		Amend January 31, 2002	
ORD. 45.44		Amend January 31, 2002	
ORD. 45.68	Art. 11	Amend April 18, 2008	Acknowledged May 12, 2008
ORD. 45.92		Adopt January 30, 2012	
ORD. 44.99		Adopt May 27, 2014	
ORD. 45.84		Adopt March 31, 2015	

PARTITION PLAT:
A final map, prepared pursuant to ORS 92, containing all the descriptions, locations, specifications, provisions and necessary information concerning a land partition, that is consistent with an approved tentative plat.

PATIO:
A roofed area permanently open on not less than 3 sides and used solely for outdoor living.

PERMIT:
Discretionary approval of a proposed development of land.

PERSON:
Any individual, firm, co-partnership, joint venture, association, social club, fraternal organization, corporation, estate, trust, business trust, receiver, syndicate, district, political subdivision, foreign country, or any other group or combination acting as a unit.

PERSONAL SERVICES:
Commercial establishments primarily engaged in the provision of support services to other business, or services of a personal or nonprofessional nature. Business activity may be conducted on the premises or off-premise. Typical uses include barber and beauty shops, shoe repair, office maintenance services, health fitness studios, photographers, film processing shops, funeral and mortuary services, travel agencies, laundry and dry cleaning establishments, secretarial services.

ORD. 45.2		Adopted February 16, 1984	Repealed April 3, 1986
ORD. 45.6	Art. 11.002	Amend April 3, 1986	Repealed March 26, 1987
ORD. 45.9	Art. 11.002	Amend March 26, 1987	Repealed August 15, 1990
ORD. 45.17 Updated Full KCLDC		**Adopt August 15, 1990**	
ORD. 45.20	Art. 446.003(20)(a) to Art. 11	Amend June 5, 1991	
ORD. 45.23		Amend June 5, 1991	
ORD. 45.24		Amend October 9, 1991	
ORD. 45.27		Amend April 8, 1992	Repealed February 15, 1995
ORD. 45.31		Adopt February 15, 1995	
ORD. 45.34		Amend May 24, 1996	
ORD. 45.35		Amend September 22, 1997	
ORD. 45.36		Amend November 10, 1998	
ORD. 45.36(B)		Amend December 8, 1998	
ORD. 45.36(C)		Amend February 11, 1999	
ORD. 45.38		Amend January 31, 2002	
ORD. 45.41		Amend January 31, 2002	
ORD. 45.44		Amend January 31, 2002	
ORD. 45.68 Art. 11		Amend April 18, 2008	Acknowledged May 12, 2008
ORD. 45.92		Adopt January 30, 2012	
ORD. 44.99		Adopt May 27, 2014	
ORD. 45.84		Adopt March 31, 2015	

PERSONAL USE AIRPORT:
An airstrip or helicopter pad including associated hangar, maintenance and service facilities restricted, except for aircraft emergencies, to use by the owner, and on an infrequent and occasional basis, by invited guests, and by commercial aviation activities in connection with agricultural operations. No aircraft may be based on a personal use airport other than those owned or controlled by the owner of the airstrip.

PLANNED UNIT DEVELOPMENT:
A development based on a comprehensive and complete design or plan identifying all uses of the land for the development.

POLLUTION:
A violation of applicable county, state, or federal environmental quality statutes, rules or standards.

PRACTICABLE:
That which may be done, practiced or accomplished, or that which is performable, feasible or possible.

PRECISION INSTRUMENT RUNWAY:
A runway having an existing instrument approach procedure utilizing an Instrument Landing System (ILS) or a Precision Approach Radar (PAR). It also means a runway for which a precision approach system is planned and is so indicated on an FAA-approved airport layout plan; any other FAA planning document, or military service's military airport planning document.

PREEXISTING:
Something that was lawfully established prior to the adoption of current zoning regulations. A building, structure, lot, parcel, unit of land preexisting.

ORD. 45.2		Adopted February 16, 1984	Repealed April 3, 1986
ORD. 45.6	Art. 11.002	Amend April 3, 1986	Repealed March 26, 1987
ORD. 45.9	Art. 11.002	Amend March 26, 1987	Repealed August 15, 1990
ORD. 45.17	**Updated Full KCLDC**	**Adopt August 15, 1990**	
ORD. 45.20	Art. 446.003(20)(a) to Art. 11	Amend June 5, 1991	
ORD. 45.23		Amend June 5, 1991	
ORD. 45.24		Amend October 9, 1991	
ORD. 45.27		Amend April 8, 1992	Repealed February 15, 1995
ORD. 45.31		Adopt February 15, 1995	
ORD. 45.34		Amend May 24, 1996	
ORD. 45.35		Amend September 22, 1997	
ORD. 45.36		Amend November 10, 1998	
ORD. 45.36(B)		Amend December 8, 1998	
ORD. 45.36(C)		Amend February 11, 1999	
ORD. 45.38		Amend January 31, 2002	
ORD. 45.41		Amend January 31, 2002	
ORD. 45.44		Amend January 31, 2002	
ORD. 45.68	Art. 11	Amend April 18, 2008	Acknowledged May 12, 2008
ORD. 45.92		Adopt January 30, 2012	
ORD. 44.99		Adopt May 27, 2014	
ORD. 45.84		Adopt March 31, 2015	

PRIMARY OR PRINCIPLE USE:
The first use to which property is or may be devoted, and to which all other uses on the premises are accessory or secondary uses. As used relative to dwelling units, the primary dwelling would be the first dwelling unit to be located on a specific parcel or lot.

PRIMARY PROCESSING OF FOREST PRODUCTS:
The use of a portable chipper or stud mill or other similar method of initial treatment of a forest product in order to enable its shipment to market.

PRIMARY SURFACE:
A surface longitudinally centered on a runway. When the runway has a specially prepared hard surface, the primary surface extends 200 feet beyond each end of that runway; but when the runway has no specially prepared hard surface, or planned hard surface, the primary surface of a runway will be that width prescribed in Part 77 of the Federal Aviation Regulations (FAR) for the most precise approach existing or planned for either end of that runway. The elevations of any point on the primary surface is the same as the elevation of the nearest point on the runway centerline.

PROCESSING:
For mining purposes includes, but is not limited to crushing, washing, milling and screening as well as the batching and blending of mineral aggregate into asphalt and Portland cement concrete.

PROFESSIONAL OFFICES:
Commercial office related activities primarily related to professional, executive, management, or administrative services typically directed to the public and conducted on the premises. Typical uses include doctor and dentist offices, small animal veterinary services, legal offices, real estate and related services, financial services, banks, research laboratories and development firms.

ORD. 45.2		Adopted February 16, 1984	Repealed April 3, 1986
ORD. 45.6	Art. 11.002	Amend April 3, 1986	Repealed March 26, 1987
ORD. 45.9	Art. 11.002	Amend March 26, 1987	Repealed August 15, 1990
ORD. 45.17 Updated Full KCLDC		**Adopt August 15, 1990**	
ORD. 45.20	Art. 446.003(20)(a) to Art. 11	Amend June 5, 1991	
ORD. 45.23		Amend June 5, 1991	
ORD. 45.24		Amend October 9, 1991	
ORD. 45.27		Amend April 8, 1992	Repealed February 15, 1995
ORD. 45.31		Adopt February 15, 1995	
ORD. 45.34		Amend May 24, 1996	
ORD. 45.35		Amend September 22, 1997	
ORD. 45.36		Amend November 10, 1998	
ORD. 45.36(B)		Amend December 8, 1998	
ORD. 45.36(C)		Amend February 11, 1999	
ORD. 45.38		Amend January 31, 2002	
ORD. 45.41		Amend January 31, 2002	
ORD. 45.44		Amend January 31, 2002	
ORD. 45.68 Art. 11		Amend April 18, 2008	Acknowledged May 12, 2008
ORD. 45.92		Adopt January 30, 2012	
ORD. 44.99		Adopt May 27, 2014	
ORD. 45.84		Adopt March 31, 2015	

PROOF OF LEGAL ACCESS:
Legally recorded documentation or public permit establishing the right of ingress and egress to a lot, parcel, unit of land, or tract.

PROPERTY LINE:
A property line shall be a division line between two abutting properties which are in separate ownership.

PROPERTY LINE ADJUSTMENT:
A relocation of the division line between two abutting properties which are in separate ownership.

PUBLIC IMPROVEMENTS:
Physical facilities and infrastructure, including but not limited to curbs, gutters, sidewalks, street lights, street signs, roadbeds, road surfaces, storm drains and appurtenances, fire hydrants, sanitary sewers and appurtenances, and utilities.

PUBLIC ROAD:
A road over which the public has a right of use that is a matter of public record.

PUBLIC UTILITY:
Any corporation, including municipal or quasi-municipal corporation, service district, company, individual, or association that owns or operates any plant or equipment.

(a) For the conveyance of telegraph or telephone messages, with or without wires;

(b) For the transportation of water, gas, or petroleum products by pipeline;

(c) For the production, transmission, delivery of furnishing of heat, light, water, or electricity;

(d) For the transmission and delivery of television pictures and sound by cables;

ORD. 45.2		Adopted February 16, 1984	Repealed April 3, 1986
ORD. 45.6	Art. 11.002	Amend April 3, 1986	Repealed March 26, 1987
ORD. 45.9	Art. 11.002	Amend March 26, 1987	Repealed August 15, 1990
ORD. 45.17	**Updated Full KCLDC**	**Adopt August 15, 1990**	
ORD. 45.20	Art. 446.003(20)(a) to Art. 11	Amend June 5, 1991	
ORD. 45.23		Amend June 5, 1991	
ORD. 45.24		Amend October 9, 1991	
ORD. 45.27		Amend April 8, 1992	Repealed February 15, 1995
ORD. 45.31		Adopt February 15, 1995	
ORD. 45.34		Amend May 24, 1996	
ORD. 45.35		Amend September 22, 1997	
ORD. 45.36		Amend November 10, 1998	
ORD. 45.36(B)		Amend December 8, 1998	
ORD. 45.36(C)		Amend February 11, 1999	
ORD. 45.38		Amend January 31, 2002	
ORD. 45.41		Amend January 31, 2002	
ORD. 45.44		Amend January 31, 2002	
ORD. 45.68	Art. 11	Amend April 18, 2008	Acknowledged May 12, 2008
ORD. 45.92		Adopt January 30, 2012	
ORD. 44.99		Adopt May 27, 2014	
ORD. 45.84		Adopt March 31, 2015	

(e) For the transportation of persons or property by street railroads or other street transportation or common carriers;

(f) For the treatment and disposal of sewage waste; or

(g) For the disposal of storm water runoff.

QUARRY:
Any place on a lot or parcel of land where dirt, soil, sand, gravel, rock, clay, decomposed granite, or other similar material is removed by excavation or otherwise. Quarry shall include mining operations, including washing, crushing, screening, and temporary storage, for the removal of ores, precious stones, or other solid minerals.

QUASI-JUDICIAL:
A decision made by a review body by applying existing law and policy to specific situations and evidence (although not necessarily just facts that can be objectively measured) in order to reach decisions that involve discretionary judgment.

RAMADA:
A stationary structure having a roof extending over a manufactured structure, which may also extend over a patio or parking space for motor vehicles, and is used principally for protection from snow, sun or rain.

RECLAMATION:
The employment in a surface mining operation of procedures designed to minimize, as much as practical, the disruption of the surface mining operation and to provide for the rehabilitation of any such surface resources adversely affected by such mining operations through the rehabilitation of plant cover, soil stability, water resource and other measures appropriate to the subsequent beneficial use of mined and reclaimed land.

ORD. 45.2		Adopted February 16, 1984	Repealed April 3, 1986
ORD. 45.6	Art. 11.002	Amend April 3, 1986	Repealed March 26, 1987
ORD. 45.9	Art. 11.002	Amend March 26, 1987	Repealed August 15, 1990
ORD. 45.17	**Updated Full KCLDC**	**Adopt August 15, 1990**	
ORD. 45.20	Art. 446.003(20)(a) to Art. 11	Amend June 5, 1991	
ORD. 45.23		Amend June 5, 1991	
ORD. 45.24		Amend October 9, 1991	
ORD. 45.27		Amend April 8, 1992	Repealed February 15, 1995
ORD. 45.31		Adopt February 15, 1995	
ORD. 45.34		Amend May 24, 1996	
ORD. 45.35		Amend September 22, 1997	
ORD. 45.36		Amend November 10, 1998	
ORD. 45.36(B)		Amend December 8, 1998	
ORD. 45.36(C)		Amend February 11, 1999	
ORD. 45.38		Amend January 31, 2002	
ORD. 45.41		Amend January 31, 2002	
ORD. 45.44		Amend January 31, 2002	
ORD. 45.68	Art. 11	Amend April 18, 2008	Acknowledged May 12, 2008
ORD. 45.92		Adopt January 30, 2012	
ORD. 44.99		Adopt May 27, 2014	
ORD. 45.84		Adopt March 31, 2015	

RECONFIGURATION, BOUNDARY:
Any change made to the boundary of a lot, parcel, tract, or unit of land.

RECREATIONAL VEHICLE (RV):
A vacation trailer or other unit with or without motive power which was designed for human occupancy, has sleeping, cooking and plumbing facilities, and has a gross floor space of less than 400 square feet. Typical uses include camping-trailers, motor homes, bus conversions, travel trailers, or any vehicle converted for use or partial use as a recreational vehicle. The unit is identified as a recreational vehicle by the manufacturer or converter.

RECREATIONAL VEHICLE PARK.
A lot, parcel, tract, or unit of land upon which two (2) or more recreational vehicle (RV) sites are located, established or maintained for the general public as temporary living quarters for recreational or vacation purposes.

REPAIR SERVICE:
Establishments primarily engaged in the provision of repair services for durable and non-durable goods, exclusive of automotive and related equipment repairs. Typical uses include appliance repair shops, alteration and tailor shops, and instrument repair shops.

REPLAT:
The act of platting the lots, parcels and easements in a recorded subdivision or partition plat to achieve a reconfiguration of the existing plat or to increase or decrease the number of lots in the subdivision.

ORD. 45.2		Adopted February 16, 1984	Repealed April 3, 1986
ORD. 45.6	Art. 11.002	Amend April 3, 1986	Repealed March 26, 1987
ORD. 45.9	Art. 11.002	Amend March 26, 1987	Repealed August 15, 1990
ORD. 45.17 Updated Full KCLDC		**Adopt August 15, 1990**	
ORD. 45.20	Art. 446.003(20)(a) to Art. 11	Amend June 5, 1991	
ORD. 45.23		Amend June 5, 1991	
ORD. 45.24		Amend October 9, 1991	
ORD. 45.27		Amend April 8, 1992	Repealed February 15, 1995
ORD. 45.31		Adopt February 15, 1995	
ORD. 45.34		Amend May 24, 1996	
ORD. 45.35		Amend September 22, 1997	
ORD. 45.36		Amend November 10, 1998	
ORD. 45.36(B)		Amend December 8, 1998	
ORD. 45.36(C)		Amend February 11, 1999	
ORD. 45.38		Amend January 31, 2002	
ORD. 45.41		Amend January 31, 2002	
ORD. 45.44		Amend January 31, 2002	
ORD. 45.68 Art. 11		Amend April 18, 2008	Acknowledged May 12, 2008
ORD. 45.92		Adopt January 30, 2012	
ORD. 44.99		Adopt May 27, 2014	
ORD. 45.84		Adopt March 31, 2015	

RESIDENTIAL CARE FACILITY:
A facility licensed by or under the authority of the Oregon Department of Human Resources which provides residential care alone or in conjunction with treatment or training or combination thereof for 6 to 15 individuals who need not be related. Staff persons required to meet Department of Human Resources licensing requirements shall not be counted in the number of facility residents, and need not be related to each other or to any resident of the facility.

RESIDENTIAL CARE HOME:
A home licensed by or under the authority of the Oregon Department of Human Resources which provides residential care along or in conjunction with treatment or training for 5 or fewer residents who need not be related. Staff persons required to meet Department of Human Resources licensing requirements shall not be counted in the number of facility residents, and need not be related to each other or to any resident of the facility.

RESORT:
Lodging and food services provided for the traveling public, with particular emphasis on outdoor amenities and recreation opportunities.

RESORT COMMUNITY:
A "Resort Community" is an unincorporated community that was established primarily for the continues to be used primarily for recreation or resort purposes; and (a) includes residential and commercial uses, and (b) provides for both temporary and permanent residential occupancy, including overnight lodging and accommodations.

RESTORATION:
The revitalization, returning or replacing of original attributes and amenities, such as natural biological productivity, aesthetic and cultural resources, which have been diminished or lost by past alterations, activities or catastrophic events.

ORD. 45.2		Adopted February 16, 1984	Repealed April 3, 1986
ORD. 45.6	Art. 11.002	Amend April 3, 1986	Repealed March 26, 1987
ORD. 45.9	Art. 11.002	Amend March 26, 1987	Repealed August 15, 1990
ORD. 45.17	**Updated Full KCLDC**	**Adopt August 15, 1990**	
ORD. 45.20	Art. 446.003(20)(a) to Art. 11	Amend June 5, 1991	
ORD. 45.23		Amend June 5, 1991	
ORD. 45.24		Amend October 9, 1991	
ORD. 45.27		Amend April 8, 1992	Repealed February 15, 1995
ORD. 45.31		Adopt February 15, 1995	
ORD. 45.34		Amend May 24, 1996	
ORD. 45.35		Amend September 22, 1997	
ORD. 45.36		Amend November 10, 1998	
ORD. 45.36(B)		Amend December 8, 1998	
ORD. 45.36(C)		Amend February 11, 1999	
ORD. 45.38		Amend January 31, 2002	
ORD. 45.41		Amend January 31, 2002	
ORD. 45.44		Amend January 31, 2002	
ORD. 45.68	Art. 11	Amend April 18, 2008	Acknowledged May 12, 2008
ORD. 45.92		Adopt January 30, 2012	
ORD. 44.99		Adopt May 27, 2014	
ORD. 45.84		Adopt March 31, 2015	

RETAIL SALES:
Commercial businesses primarily engaged in the sale of commonly used goods and general merchandise directly to the public. Typical uses include bicycle shops, bookstores, camera shops, clothing and shoes stores, florists, stereo and record stores, toy stores, video rentals.

REVIEW BODY:
The Klamath County Planning Director or designee, the Klamath County Hearings Officer, the Klamath County Planning Commission or the Klamath County Board of Commissioners.

RIGHT-OF-WAY:
The area between boundary lines of a street, road or other easement.

RIPARIAN AREA:
The area adjacent to a river, lake, or stream consisting of the area of transition from an aquatic ecosystem to a terrestrial ecosystem.

ROAD:
A public or private way which is created to provide ingress and egress for persons to one or more lots parcels, areas or tracts of land, excluding a private way that is created to provide ingress or egress in conjunction with the use of such land for a forestry, mining, or agricultural purpose means the primary, but not the casual or incidental use of land for this purpose.

RUNWAY 7-25:
A Visual Utility Runway located at the City of Klamath Falls Airport/Kingsley Field, aligned in an east-west direction and designated as a primary runway.

ORD. 45.2		Adopted February 16, 1984	Repealed April 3, 1986
ORD. 45.6	Art. 11.002	Amend April 3, 1986	Repealed March 26, 1987
ORD. 45.9	Art. 11.002	Amend March 26, 1987	Repealed August 15, 1990
ORD. 45.17	**Updated Full KCLDC**	**Adopt August 15, 1990**	
ORD. 45.20	Art. 446.003(20)(a) to Art. 11	Amend June 5, 1991	
ORD. 45.23		Amend June 5, 1991	
ORD. 45.24		Amend October 9, 1991	
ORD. 45.27		Amend April 8, 1992	Repealed February 15, 1995
ORD. 45.31		Adopt February 15, 1995	
ORD. 45.34		Amend May 24, 1996	
ORD. 45.35		Amend September 22, 1997	
ORD. 45.36		Amend November 10, 1998	
ORD. 45.36(B)		Amend December 8, 1998	
ORD. 45.36(C)		Amend February 11, 1999	
ORD. 45.38		Amend January 31, 2002	
ORD. 45.41		Amend January 31, 2002	
ORD. 45.44		Amend January 31, 2002	
ORD. 45.68	Art. 11	Amend April 18, 2008	Acknowledged May 12, 2008
ORD. 45.92		Adopt January 30, 2012	
ORD. 44.99		Adopt May 27, 2014	
ORD. 45.84		Adopt March 31, 2015	

RUNWAY 14:
A Non-precision Instrument Runway located at the City of Klamath Falls Airport/Kingsley Field, aligned in a southeasterly direction and designated as a crosswind runway.

RUNWAY 32:
A Precision Instrument Runway located at the City of Klamath Falls Airport/Kingsley Field, aligned in a northwest direction and designated as a primary runway.

RURAL COMMUNITY:
An unincorporated community primarily composed of permanent residential dwellings, which includes at least two (2) other uses that provide commercial, industrial, or public services (e.g., schools, churches, grange halls, post offices) to the community, the surrounding rural area, or to persons traveling through the area.

RURAL SERVICE CENTER:
An unincorporated community consisting primarily of commercial or industrial uses providing goods and services to the surrounding rural area or to persons traveling through the area, but which also includes some permanent residential dwellings.

RURAL LAND:
Rural lands are those which are outside the urban growth boundary and are: (a) Nonurban agricultural, forest or open space lands, or (b) Other lands suitable for sparse settlement, small farms or acreage home-sites with no or hardly any public services, and which are not suitable, necessary or intended for urban use.

ORD. 45.2		Adopted February 16, 1984	Repealed April 3, 1986
ORD. 45.6	Art. 11.002	Amend April 3, 1986	Repealed March 26, 1987
ORD. 45.9	Art. 11.002	Amend March 26, 1987	Repealed August 15, 1990
ORD. 45.17 Updated Full KCLDC		**Adopt August 15, 1990**	
ORD. 45.20	Art. 446.003(20)(a) to Art. 11	Amend June 5, 1991	
ORD. 45.23		Amend June 5, 1991	
ORD. 45.24		Amend October 9, 1991	
ORD. 45.27		Amend April 8, 1992	Repealed February 15, 1995
ORD. 45.31		Adopt February 15, 1995	
ORD. 45.34		Amend May 24, 1996	
ORD. 45.35		Amend September 22, 1997	
ORD. 45.36		Amend November 10, 1998	
ORD. 45.36(B)		Amend December 8, 1998	
ORD. 45.36(C)		Amend February 11, 1999	
ORD. 45.38		Amend January 31, 2002	
ORD. 45.41		Amend January 31, 2002	
ORD. 45.44		Amend January 31, 2002	
ORD. 45.68 Art. 11		Amend April 18, 2008	Acknowledged May 12, 2008
ORD. 45.92		Adopt January 30, 2012	
ORD. 44.99		Adopt May 27, 2014	
ORD. 45.84		Adopt March 31, 2015	

RURAL COMMUNITY:
Rural communities are nearly identical in function as rural service centers. Rural communities, however, have both community sewer and water systems which allow for greater development densities (one dwelling unit per 5,000 square feet).

RURAL SERVICE CENTER:
An unincorporated industrial and/or convenience-commercial and residential center of a nature and size only as required to serve the needs of the surrounding rural lands. Typically, rural service centers are isolated, rather compact and located at junctions of principal rural roads or at other strategic locations. The absence of key public facilities (community sewer and water systems) limit development densities to a maximum of one dwelling unit per acre.

SCHOOL:
Public, private and parochial preschool, elementary, junior and senior high schools, colleges and trade schools together with incidental administrative, maintenance and recreational facilities.

SCRAP OPERATIONS:
Operations primarily engaged in dismantling, storage, processing or reprocessing of used or waste materials with the intent of reuse. Typical uses include junk yards or salvage yards.

SEASONAL OR TRANSIENT BUSINESSES:
Any trade, profession, occupation or pursuit conducted for gain, including those pursuits by fraternal organizations, clubs, lodges and similar places or establishments other than those that have IRS tax exempt [IRC 501(c)] status which operates an enterprise located in the unincorporated area of Klamath County for a period of more than two days and less than ninety days. The hours of operation of permitted businesses are limited to the hours of 6:00 a.m. to 10:00 p.m.

ORD. 45.2		Adopted February 16, 1984	Repealed April 3, 1986
ORD. 45.6	Art. 11.002	Amend April 3, 1986	Repealed March 26, 1987
ORD. 45.9	Art. 11.002	Amend March 26, 1987	Repealed August 15, 1990
ORD. 45.17	**Updated Full KCLDC**	**Adopt August 15, 1990**	
ORD. 45.20	Art. 446.003(20)(a) to Art. 11	Amend June 5, 1991	
ORD. 45.23		Amend June 5, 1991	
ORD. 45.24		Amend October 9, 1991	
ORD. 45.27		Amend April 8, 1992	Repealed February 15, 1995
ORD. 45.31		Adopt February 15, 1995	
ORD. 45.34		Amend May 24, 1996	
ORD. 45.35		Amend September 22, 1997	
ORD. 45.36		Amend November 10, 1998	
ORD. 45.36(B)		Amend December 8, 1998	
ORD. 45.36(C)		Amend February 11, 1999	
ORD. 45.38		Amend January 31, 2002	
ORD. 45.41		Amend January 31, 2002	
ORD. 45.44		Amend January 31, 2002	
ORD. 45.68	Art. 11	Amend April 18, 2008	Acknowledged May 12, 2008
ORD. 45.92		Adopt January 30, 2012	
ORD. 44.99		Adopt May 27, 2014	
ORD. 45.84		Adopt March 31, 2015	

SERIES PARTITIONED LAND AND SERIES PARTITION:
A series of partitions of land located within this state resulting in the creation of four or more parcels over a period of more than one calendar year.

SIGN:
Any method of display or part thereof, for visual communication that includes any announcement, declaration, demonstration, display, illustration or insignia which is used to advertise or promote the interest of any person, business, group or enterprise and includes accessory signs and outdoor advertising. "Sign" does not include official notices issued by any court or public body or officer, notices posted by any public officer in performance of a public duty, or by any person giving legal notice, directional warning or information structure required or authorized by law or by federal, state or county authority or permanent memorial or historical signs, plaques or markers.

SINGLE FAMILY DWELLING:
Residential uses involving site built dwelling units for individual ownership, lease or rental on an individual lot or parcel. Single-family dwelling placed inside of the Urban Growth Boundary are required to have a garage or carport at least 180 square feet in size and placed in the same lot or parcel as the dwelling.

SITE PLAN:
A plan other than a building plan showing the physical arrangement, design or use of a lot or parcel of land, buildings or structures indicating uses, form, dimensions and other pertinent data.

STOCKYARDS AND ANIMAL SALES:
Temporary keeping of transient livestock for auction, market, sale, shipping or slaughter.

STREET:
Deleted per Ordinance 45.67

ORD. 45.2		Adopted February 16, 1984	Repealed April 3, 1986
ORD. 45.6	Art. 11.002	Amend April 3, 1986	Repealed March 26, 1987
ORD. 45.9	Art. 11.002	Amend March 26, 1987	Repealed August 15, 1990
ORD. 45.17	**Updated Full KCLDC**	**Adopt August 15, 1990**	
ORD. 45.20	Art. 446.003(20)(a) to Art. 11	Amend June 5, 1991	
ORD. 45.23		Amend June 5, 1991	
ORD. 45.24		Amend October 9, 1991	
ORD. 45.27		Amend April 8, 1992	Repealed February 15, 1995
ORD. 45.31		Adopt February 15, 1995	
ORD. 45.34		Amend May 24, 1996	
ORD. 45.35		Amend September 22, 1997	
ORD. 45.36		Amend November 10, 1998	
ORD. 45.36(B)		Amend December 8, 1998	
ORD. 45.36(C)		Amend February 11, 1999	
ORD. 45.38		Amend January 31, 2002	
ORD. 45.41		Amend January 31, 2002	
ORD. 45.44		Amend January 31, 2002	
ORD. 45.68	Art. 11	Amend April 18, 2008	Acknowledged May 12, 2008
ORD. 45.92		Adopt January 30, 2012	
ORD. 44.99		Adopt May 27, 2014	
ORD. 45.84		Adopt March 31, 2015	

STREET PLUG OR RESERVE STRIP:
A narrow strip of land controlling access to a street or half street, title to which is dedicated to the County and the disposal of which lands shall be placed within the jurisdiction of the Board of County Commissioners for disposal under conditions approved by the appropriate review body.

STRUCTURAL ALTERATIONS:
Any change in the supporting members of a building, such as bearing walls, column, beam or guides, floor or ceiling joists, roof rafters, roof diagrams, roof trusses foundations, piles, retaining walls or similar.

STRUCTURE:
Anything constructed or installed or portable, which requires a fixed location on the ground, or is attached to something having a fixed location on the ground. For Floodplain management purposes, it means a walled and roofed building, including a gas or liquid storage tank, that is principally above ground, as well as a manufactured dwelling.

SUBDIVISION:
Either an act of subdividing land or an area or a tract of land subdivided.

SUBDIVISION PLAT:
A final map and other writing containing all the description, locations, specifications, dedications, provisions and information concerning a subdivision.

SUBSTANTIAL DAMAGE:
For floodplain management purposes, means damage of any origin sustained by a structure whereby the cost of restoring the structure to its before damaged condition would equal or exceed 50 percent of the market value of the structure before the damage occurred.

ORD. 45.2		Adopted February 16, 1984	Repealed April 3, 1986
ORD. 45.6	Art. 11.002	Amend April 3, 1986	Repealed March 26, 1987
ORD. 45.9	Art. 11.002	Amend March 26, 1987	Repealed August 15, 1990
ORD. 45.17	**Updated Full KCLDC**	**Adopt August 15, 1990**	
ORD. 45.20	Art. 446.003(20)(a) to Art. 11	Amend June 5, 1991	
ORD. 45.23		Amend June 5, 1991	
ORD. 45.24		Amend October 9, 1991	
ORD. 45.27		Amend April 8, 1992	Repealed February 15, 1995
ORD. 45.31		Adopt February 15, 1995	
ORD. 45.34		Amend May 24, 1996	
ORD. 45.35		Amend September 22, 1997	
ORD. 45.36		Amend November 10, 1998	
ORD. 45.36(B)		Amend December 8, 1998	
ORD. 45.36(C)		Amend February 11, 1999	
ORD. 45.38		Amend January 31, 2002	
ORD. 45.41		Amend January 31, 2002	
ORD. 45.44		Amend January 31, 2002	
ORD. 45.68	Art. 11	Amend April 18, 2008	Acknowledged May 12, 2008
ORD. 45.92		Adopt January 30, 2012	
ORD. 44.99		Adopt May 27, 2014	
ORD. 45.84		Adopt March 31, 2015	

SUBSTANTIAL IMPROVEMENT:
For floodplain management purposes, means any reconstruction, rehabilitation, addition or other improvement of a structure, the cost of which equals or exceeds 50 percent of the market value of the structure before the "start of construction" of the improvement. The term includes structures which have incurred "substantial damage" regardless of the actual repair work being performed. The term does not include: (l) Any project for the improvement of a structure to correct existing violations of state or local health, sanitary, or safety code specifications which have been identified by the local code enforcement official and which are the minimum necessary to assure safe living conditions; or (2) Any alteration of an "historic structure" provided that the alteration will not preclude the structure's continued designation as an "historic structure."

TRACT:
One or more contiguous lots or parcels in the same ownership. Contiguous means connected in such a manner as to form a single block of land.

TRUCK STOP:
Highway related service establishments providing motor fuel, service, towing and food service.

URBAN AREA:
All lands located within an acknowledged Urban Growth Boundary for the town and cities of Bonanza, Chiloquin, Klamath Falls, Malin and Merrill.

URBAN LAND:
Areas which include an incorporated city and may also include lands adjacent to and outside the incorporated city limits, and may also have concentrations of people who generally reside and work in the area and have supporting public facilities and services.

ORD. 45.2		Adopted February 16, 1984	Repealed April 3, 1986
ORD. 45.6	Art. 11.002	Amend April 3, 1986	Repealed March 26, 1987
ORD. 45.9	Art. 11.002	Amend March 26, 1987	Repealed August 15, 1990
ORD. 45.17	**Updated Full KCLDC**	**Adopt August 15, 1990**	
ORD. 45.20	Art. 446.003(20)(a) to Art. 11	Amend June 5, 1991	
ORD. 45.23		Amend June 5, 1991	
ORD. 45.24		Amend October 9, 1991	
ORD. 45.27		Amend April 8, 1992	Repealed February 15, 1995
ORD. 45.31		Adopt February 15, 1995	
ORD. 45.34		Amend May 24, 1996	
ORD. 45.35		Amend September 22, 1997	
ORD. 45.36		Amend November 10, 1998	
ORD. 45.36(B)		Amend December 8, 1998	
ORD. 45.36(C)		Amend February 11, 1999	
ORD. 45.38		Amend January 31, 2002	
ORD. 45.41		Amend January 31, 2002	
ORD. 45.44		Amend January 31, 2002	
ORD. 45.68	Art. 11	Amend April 18, 2008	Acknowledged May 12, 2008
ORD. 45.92		Adopt January 30, 2012	
ORD. 44.99		Adopt May 27, 2014	
ORD. 45.84		Adopt March 31, 2015	

USE:
The primary or principal activity, structure, or facility occurring upon land.

VETERINARY CLINIC:
A place where large and small animals or pets are given medical attention and cared for during the time of such treatment.

WETLANDS:
Naturally occurring land areas where excess water is the dominant factor determining the nature of soil development and the types of plant and animal communities living at the soil surface. Wetland soils retain sufficient moisture to support aquatic or semiaquatic plant life, and include those areas that are inundated or saturated by surface or ground water at least fourteen consecutive days during the growing season.

WAREHOUSING, STORAGE AND DISTRIBUTION: HEAVY:
Open-air storage, distribution and handling of materials and equipment. Excludes ministorage facilities. Typical uses include monument or stone yards, open storage yards, petroleum storage facilities.

WAREHOUSING, STORAGE AND DISTRIBUTION: LIGHT:
Wholesaling, storage, distribution, and warehouse services of materials and equipment within enclosed structures. Excludes mini-storage facilities. Typical uses include distributors, storage warehouses, moving and storage firms.

WORKER RESIDENTIAL:
Residential uses necessary and accessory to, in conjunction with, and subordinate to the primary agricultural, forestry, commercial or industrial use of property.

ORD. 45.2		Adopted February 16, 1984	Repealed April 3, 1986
ORD. 45.6	Art. 11.002	Amend April 3, 1986	Repealed March 26, 1987
ORD. 45.9	Art. 11.002	Amend March 26, 1987	Repealed August 15, 1990
ORD. 45.17	**Updated Full KCLDC**	**Adopt August 15, 1990**	
ORD. 45.20	Art. 446.003(20)(a) to Art. 11	Amend June 5, 1991	
ORD. 45.23		Amend June 5, 1991	
ORD. 45.24		Amend October 9, 1991	
ORD. 45.27		Amend April 8, 1992	Repealed February 15, 1995
ORD. 45.31		Adopt February 15, 1995	
ORD. 45.34		Amend May 24, 1996	
ORD. 45.35		Amend September 22, 1997	
ORD. 45.36		Amend November 10, 1998	
ORD. 45.36(B)		Amend December 8, 1998	
ORD. 45.36(C)		Amend February 11, 1999	
ORD. 45.38		Amend January 31, 2002	
ORD. 45.41		Amend January 31, 2002	
ORD. 45.44		Amend January 31, 2002	
ORD. 45.68	Art. 11	Amend April 18, 2008	Acknowledged May 12, 2008
ORD. 45.92		Adopt January 30, 2012	
ORD. 44.99		Adopt May 27, 2014	
ORD. 45.84		Adopt March 31, 2015	

YARD:
An open space on a lot or parcel of land, other than a court, unoccupied and unobstructed by a building from the ground upward.

YARD, FRONT:
A yard extending across the full width of the lot or parcel of land on which a building or structure is located and situated between the front lot line and the nearest point of the building or structure.

YARD, REAR:
A yard extending across the full width of the lot or parcel of land on which a building or structure is located and situated between the rear lot line and the nearest point of a building or structure.

YARD, SIDE:
A yard extending from the front yard, or the front lot line where no front yard is required to the rear yard or to the rear lot line where no rear yard is required. The width of a side yard is the distance between each side lot line and the nearest point of a building or structure.

ZONE, APPROACH, TRANSITIONAL, HORIZONTAL, AND CONICAL:
The area under the approach, transitional, horizontal, and conical surfaces defined in Part 77, Objects Affecting Navigable Air Space, Federal Aviation Regulations, published by the Federal Aviation Administration (FAA) of the U.S. Department of Transportation.

ORD. 45.2		Adopted February 16, 1984	Repealed April 3, 1986
ORD. 45.6	Art. 11.002	Amend April 3, 1986	Repealed March 26, 1987
ORD. 45.9	Art. 11.002	Amend March 26, 1987	Repealed August 15, 1990
ORD. 45.17	**Updated Full KCLDC**	**Adopt August 15, 1990**	
ORD. 45.20	Art. 446.003(20)(a) to Art. 11	Amend June 5, 1991	
ORD. 45.23		Amend June 5, 1991	
ORD. 45.24		Amend October 9, 1991	
ORD. 45.27		Amend April 8, 1992	Repealed February 15, 1995
ORD. 45.31		Adopt February 15, 1995	
ORD. 45.34		Amend May 24, 1996	
ORD. 45.35		Amend September 22, 1997	
ORD. 45.36		Amend November 10, 1998	
ORD. 45.36(B)		Amend December 8, 1998	
ORD. 45.36(C)		Amend February 11, 1999	
ORD. 45.38		Amend January 31, 2002	
ORD. 45.41		Amend January 31, 2002	
ORD. 45.44		Amend January 31, 2002	
ORD. 45.68	Art. 11	Amend April 18, 2008	Acknowledged May 12, 2008
ORD. 45.92		Adopt January 30, 2012	
ORD. 44.99		Adopt May 27, 2014	
ORD. 45.84		Adopt March 31, 2015	

ARTICLE 12
ADMINISTRATION

12.010 - SCOPE AND COMPLIANCE

A. Proposed Uses. The provisions of this code are applicable to all lots, parcels, buildings, structures and uses of land created, established, constructed or altered subsequent to the adoption of this code unless specifically exempted.

B. Existing Uses. The provisions of this code are not retroactive in their effect on a use of land lawfully established on the date of adoption of this code, unless review of an application for the alteration, intensification, expansion or modification of an existing use requires a discretionary decision to determine if the proposal is consistent with this code. All development permits granted pursuant to the provisions of duly enacted ordinances shall remain in effect and shall be subject to all the conditions and provisions of the original approval, unless otherwise revoked pursuant to provisions of this code.

12.020 - CONSISTENCY WITH PLANS AND LAWS

A. Actions initiated under this code shall be consistent with the Klamath County Comprehensive Plan and with applicable county, state and federal laws and regulations.

B. The rights granted by any development permit or building permit pursuant to any ordinances repealed by this code shall not be affected by such repeal, however, such permit or approval shall be maintained in accordance with the provisions of this code.

C. Any use established or conducted, or any building or structure existing in violation of any duly enacted ordinance upon the effective date of this code, shall not be deemed to have acquired status of rights of a nonconforming classification by reason of the adoption of this code or any provisions thereof. To the extent that such use, building or structure was in violation of such ordinance, statute or law, or in violation of this code, such shall be deemed a continuing violation.

D. Any use, activity, building or structure found to be non-compliant, incompatible, or inconsistent with the Klamath County Comprehensive Plan or this code shall be considered a nuisance.

12.030 - OFFICIAL ZONING MAPS

Land use zones defined in this code are denoted on the Official Zoning Map (or maps) of Klamath County and are adopted as a part of this code and any other zoning map or maps devoting any type of zoning are declared null and void and are superseded by the Official Zoning Map (or maps) of Klamath County.

12.040 - UNCERTAINTIES OF ZONE BOUNDARIES

Where uncertainties exist as to boundaries of any zone shown upon the Official Zoning Map (or maps) of Klamath County, the following provisions shall apply:

A. Where boundaries are indicated as approximately following lot lines, rights-of-way of highways, streets, alleys, roads, canals, railroads, or contours and the like, such lines shall be construed to be boundaries.

B. In the case of unsubdivided property where a zone boundary divides a lot or parcel of land, the location of such boundary which is not indicated by dimension or legal description shall be determined by the Planning Director in accordance with the Type II Administrative Review Procedure.

C. Where a public highway, street, or alley or any portion thereof is officially vacated or abandoned, the area comprising such vacated highway, street, or alley shall have applied thereto the same zone as that of the property to which it reverts. Existing or functioning highway and road right-of-ways and areas used primarily for automobile and truck transportation shall be deemed to permit the continued use as such, as well as other uses supportive of the primary use.

D. Railroad rights-or-way and areas used solely for the purpose of accommodating track, signals and other operative devices and the movement or rolling stock shall be deemed to be zoned to permit the continued use as such, as well as other uses supportive of the primary use.

E. Easements or land areas used solely for electric power line and poles, telephone lines and poles and gas transmission lines shall be deemed to be zoned to permit the continued use of such.

F. Upon application, all contiguous lands under one ownership and used as of the effective date of the code in conjunction with a higher use shall be zoned with the higher use. The application shall be reviewed as a zone correction pursuant to Article 49.

12.050 - FEES REQUIRED

Any application for a land use or development decision shall be accompanied by a fee when prescribed by this code, the amount of which fee shall be adopted by resolution of the Board of Commissioners.

12.060 - RULES OF INTERPRETATION

A. Effect of Provisions

1. Minimum Requirements - The regulations and standards set forth in the code are to be considered minimum requirements, which are binding upon all persons and bodies charged with administering or enforcing this code.
2. Effect Upon Private Agreements - It is not intended that these regulations are to interfere with or abrogate or annul any easements, convents or other agreement between parties. When those regulations impose a greater restriction upon the use of land that are imposed or required by other ordinances, rules, or regulations, these regulation shall control.

B. Language

1. Construction - When used in this code, the words "shall," or "will" are always mandatory and not discretionary. The words "should" or "may" are permissive. The present tense includes the past and future tenses; and the future tense includes the present. The singular number includes the plural, and the plural the singular.
2. Time of Day - Whenever a certain hour or time of day is specified in this code, or any permit, condition of approval or notice issued or given as set forth in this code, such hour shall be standard time or daylight savings time, whichever is in current use in the County.
3. Computation of Time - Time deadlines in this code shall be computed by excluding the first day and including the last day. If the last day is Saturday, Sunday or other legal holiday, the act must be performed on the next working day. "Day" shall mean calendar day unless otherwise specified.

4. Rounding of Quantities - Whenever this code requires consideration of distances, numbers of dwelling units, parking spaces or other aspects of development or the physical environment expressed in numerical quantities which are fractions of whole numbers, such numbers are to be rounded to the next highest whole number when the fraction is .5 or more, and to the next lowest whole number when the faction is less than .5.

5. "Filing" or "submitted" for the purposes of this code shall mean that any required documents have been received by the Planning Department by any deadline required by this code, order or condition of approval.

12.070 - CLASSIFICATION OF USES

A. Intent - A land use, activity, building or structure that is not enumerated or otherwise defined by this code may be classified, interpreted, or defined without amendment to the language of this code.

B. Procedure

1. The Planning Director or any other person may initiate an action to have a use classified consistent with this code.

2. Persons seeking a classification shall submit a statement to the Planning Director setting forth the need for the determination along with factual information relative to the functional, land use requirements, similarity to other uses. A site plan consistent with Section 41.060 shall be submitted.

3. A request for a classification shall be accompanied by the fee set by resolution by the Board of County Commissioners.

4. A request for a classification shall be reviewed according to the Type II Administrative Review procedure. The Planning Director or his/her designee may refer the action to the Hearings Officer for a determination or may require that the determination be addressed as a legislative amendment to this code.

C. Criteria - A request for a classification shall be reviewed against the following criteria:

1. The use, activity, building or structure has characteristics most like another use presently enumerated or defined by this code;

2. The use, activity, building or structure has functional characteristics similar to another use presently enumerated or defined by this code;
3. The use, activity, building or structure has land use requirements similar to another use presently enumerated or defined by this code; and
4. The use, activity, building or structure will not be incompatible with other uses, activities, buildings or structures already enumerated or defined by this code.

D. Effect of Classification

1. No classification, interpretation or definition made under this section shall be inconsistent with Oregon law, either by statute, rule or legal interpretation.
2. Any use, activity, building or structure may be allowed on the property in question in the same manner as a use enumerated in this code which was determined to approximate the proposal.
3. No classification, interpretation or definition shall apply to any other property than to that specifically requested.

ARTICLE 13
NONCONFORMING LOTS, USES, AND STRUCTURES

13.010 - DEFINITIONS

As used in this article, the following definitions shall be used:

A. Nonconforming Lot or Parcel: Lots or parcels lawfully created prior to February 1, 1999 and not meeting the minimum lot area, width, or access requirements of this Code.

B. Nonconforming Use: A use lawfully established prior to February 1, 1999 and which does not conform to the use requirements of this Code.

C. Nonconforming structures: A building, structure, or portion thereof which existed prior to February 1, 1999 and which does not conform to the requirements of this Code. Such structures may be nonconforming as to height, setback or similar requirements of the zone.

D. Repair: To restore a structure to its original condition after damage of less than 80% of the latest assessed value of the structure.

E. Maintenance: Normal activities such as painting, re-roofing, re-siding, required to maintain a usable structure.

F. Alteration: Alteration includes any modification or addition to a structure or its use.

13.020 - NONCONFORMING LOTS AND PARCELS

A. A lawfully created nonconforming lot or parcel, as defined by this Code, shall be entitled to the same rights such a lot or parcel would otherwise have subject to the development requirements of this code.

B. Lots or parcels may become nonconforming as a result of changes in zoning, but nonconforming lots or parcels shall not be created through the granting of a variance, conditional use permit, or other development permit.

C. Any lot or parcel which contains more than one lawfully established single family dwelling may be divided into separate lots or parcels if the criteria enumerated in this subsection are satisfied. Nonconforming lots or parcels created pursuant to this subsection shall meet access requirements of this Code, and shall maintain the maximum feasible setback and area requirements of the zone in which the property is located.

1. The lot or parcel was lawfully created and contained more than one lawfully established singlefamily dwelling prior to February 1, 1999; and
2. The dwellings do not constitute a manufactured home park as defined in this Code; and
3. The subject property is not planned/zoned for farm or forestry use.

13.030 - NONCONFORMING USES

Nonconforming uses are those out of compliance with the land use zones set forth in Chapter 50 of the Land Development Code. Nonconforming uses lawfully in existence as of February 1, 1999, may continue (including a change of zone or occupancy) subject to the following provisions:

A. When a nonconforming use is interrupted or abandoned for a period of one year, the nonconforming use shall not be resumed. After any such interruption or abandonment, the use of the site must conform to all applicable requirements of this Code. "Abandonment", as used in this section, refers to the cessation of occupancy or use;

B. If the level of activity of a nonconforming use is decreased it shall not be permitted to increase to its original level;

C. No change of a nonconforming use or a structure associated with a nonconforming use shall be permitted which would result in utilization of greater land area, physical enlargement of a structure, additional traffic or employees, or any other increase or change that would result in increased noncompliance with this Code or greater impact on adjacent and surrounding land uses.

D. Continued use is not defined as a “Nuisance” per the Code.

13.040 - NONCONFORMING STRUCTURES

Nonconforming structures are those that are out of compliance with the development standards set forth in the Land Development Code, Health Codes and Building Codes. Nonconforming structures in existence as of February 1, 1999, may continue (including a change of ownership or occupancy) subject to the following provisions:

A. Repairs and or alterations to a nonconforming structure must not materially change the use or cause the structure to be in greater nonconformance with this Code. Repairs shall be reviewed under a Type II Administrative Review Procedure.

B. Once structures are brought into conformance with this Code, repairs and alterations may not be undertaken that would cause the structure to once again be nonconforming.

C. The continued use or occupancy of the structure is not defined as “Camping” or a “Nuisance” per the Code.

13.050 - DAMAGED OR DESTROYED USES AND STRUCTURES

A. Repair or replacement of a nonconforming use or structure damaged by fire or other natural disaster shall be permitted in the same location and manner provided the work commences within 1 year and is completed within two years.

B. Repair or replacement of a damaged nonconforming use or structure not commenced within 1 year shall comply with this Code.

ARTICLE 14
ENFORCEMENT

14.010 – PURPOSE

This article establishes procedures for enforcement of this Code. The enforcement procedures set forth are intended to ensure due process of law.

14.020 – PROHIBITIONS

No person, firm, corporation or other entity shall locate, construct, maintain, repair, alter, or use a building or other structure or use or transfer land in violation of this Code and other applicable ordinances.

14.030 – ENFORCEMENT RESPONSIBILITIES

The responsibility for the enforcement of the provisions of the Land Development Code area assigned as follows:

A. County Sheriff – It is the duty of the County Sheriff and of all officers of the County otherwise charged by law to enforce this Code and all its provisions.

B. Code Enforcement Officer – The Planning Director or his/her designee shall act as the Code Enforcement Officer. The Code Enforcement Officer has the following responsibilities and powers in the enforcement of this code.

   1. To review with affected individuals the provisions of this code in order to obtain voluntary compliance with its provisions.
   2. To issue citations to appear before the Klamath County Circuit Court or the Wood River Justice Court for violations of applicable ordinances.
   3. To initiate all necessary proceedings to forfeit bond or cash deposits.
   4. To initiate enforcement hearings in front of the Hearings Officer to revoke approvals granted under this code.

14.040 – CITATIONS/ENFORCEMENT ORDERS

The Code Enforcement Officer may issue notice of enforcement to appear before the Hearings Officer, or citation to the Klamath County Circuit Court or the Wood River Justice Court pursuant to Klamath County Code Chapter 800 to any person who is alleged to have violated any of the provisions of this Code or an Order of a Hearings Officer or Board of County Commissioners. Penalties for violations shall be in accordance with Section 14.090 and/or Klamath County Code Chapter 800.

14.050 – REVOCATION OF APPROVAL OR SECURITY

A. The Code Enforcement Officer may initiate proceedings by notice to revoke the approval of any permit or land use approval issued pursuant to this Code in any case where a use of land has been established or conducted in a manner which violates or fails to observe the provisions of this code or a condition of approval.

B. The Code Enforcement Officer may initiate procedures to forfeit all or a portion of a bond, cash deposit, or other performance security.

14.060 – PROCEDURES

A. The Code Enforcement Officer shall attempt to rectify alleged violations by contacting the property owner and negotiating a stipulated written agreement to resolve the violation. Should negotiation fail, or the agreement not followed, then procedures per Section 14.040 or B. below shall be initiated.

B. The Code Enforcement Officer shall notify the violator by notice of intention to enforce or revoke at least 10 days prior to an Enforcement Hearing. Such notice shall contain the following:

1. A heading which reads, "Notice of Enforcement Hearing."
2. A list of the provisions of this code and/or conditions violated and the means to correct such violation(s), if any.
3. The date, time and place of the enforcement hearing.

4. The possible penalties for noncompliance.
5. A requirement that the individual appear and show cause why the provisions of the ordinance should not be enforced.

C. The Code Enforcement Officer shall notify the person posting the bond or cash deposit of the intention to cause forfeiture of the bond or deposit at least 20 days prior to a forfeiture hearing.

Such notice shall contain the following:

1. A heading which reads, "Notice of Forfeiture Hearing."
2. The reasons for seeking forfeiture and the remedial action required and the remedial action required.
3. The date, time and place of the forfeiture hearing.
4. The possible penalties for noncompliance.

14.070 – JURISDICTION

Court appearances and hearings before a Hearings Officer conducted for the purpose of Code Enforcement, revocation of approvals granted under this Code or the forfeiture of bonds are to be conducted as follows:

A. Before the Circuit Court or Wood River Justice Court – Citation to appear can be issued if the alleged violation is a code violation or may pose a threat to the public health, safety and welfare or; if the violation is a repeat of an earlier offense or failure to obey the Order of a Hearings Officer or the Board of County Commissioners. Procedure is that set by law.

B. Enforcement Hearings before the Hearings Officer - Hearings can be held before the Klamath County Hearings Officer in accordance with the procedures of Article 24 subject to appeal per Article 33.

14.080 – INTERFERENCE PROHIBITED

No person shall hinder, interfere with, or impede the Code Enforcement Officer in the performance of duties assigned by this code.

14.090 – PENALTIES

Any person, firm, corporation or other entity who has been found to have violated any of the provisions of this code shall be punished by a fine not exceeding $500 per occurrence, to a maximum of $1,000, if the violation is found to be a continuing or repeat circumstance. Circuit Court and Justice Court shall have concurrent jurisdiction over prosecutions for violations of this Code.

14.100 – SEVERABILITY

The provisions of the Code are severable, and any invalid section, subsection, sentence, clause, phrase or portion of this Code if for any reason is held invalid or unconstitutional in a court of competent jurisdiction, such portion shall be deemed a separate, distinct and independent provision and shall not effect the validity of the remaining portions of the Code.

ARTICLE 15
IMPROVEMENT ASSURANCES

15.010 - PURPOSE

The purpose of performance agreements is to ensure that improvements or actions required by this code are made, and that neither the County nor other affected property owners will incur such costs.

15.020 - IMPROVEMENTS

A. The Director of Public Works may specify and require road improvements or repairs, infrastructure improvements or repairs, or other site improvements or repairs to be installed prior to final approval of any development, and may require that applicants or developers enter into a performance agreement with the County for completion of required improvements or repairs.

B. The Planning Director or review body may specify site improvements to be installed or other actions required by this code, order or condition of approval to be completed, and may require that applicants or developers enter into a performance agreement with the County for completion of improvements or performance of a required action.

15.030 - PERFORMANCE AGREEMENT

A. The Planning Director or Director of Public Works may enter into an agreement, with security, allowing the applicant to install improvements or repairs over a period of time not to exceed 2 years from the time of filing a final plat, and may attach specific performance conditions to such agreement;

B. The Planning Director or Director of Public Works may enter into an agreement, with security, allowing the applicant to install required improvements or perform an action required by this code within a specified time period, and may attach specific performance conditions to such agreement;

C. A bond, or other security acceptable to the Planning Director or Director of Public Works, shall accompany any performance agreement. The bond or other security shall be one of the following:

1. A bond, or other security acceptable to the Planning Director or Director of Public Works, shall accompany any performance agreement. The bond or other security shall be one of the following:
2. Cash or certified check;
3. Time deposit certificate payable to Klamath County;
4. Savings account assignment to Klamath County;
5. An irrevocable letter of credit in favor of Klamath County from a financial institution authorized to do business in the State of Oregon, and in a form acceptable to Klamath County.

D. The Planning Director or Director of Public Works may grant special time extensions to a performance agreement, and attach conditions to any special time extension.

15.040 - EXECUTION OF PERFORMANCE AGREEMENT

A. Assurance of full and faithful performance of an improvement agreement shall be for a sum determined by the Planning Director or Director of Public Works as sufficient to cover the cost of the improvements or repairs, including related engineering, legal, and incidental expenses.

B. In the event the applicant fails to carry out all provisions of the agreement, the County shall:
   1. Call on the surety company for full and faithful performance; or
   2. Use the deposit or letter of credit to complete the work.

C. If the amount of the bond, deposit, or letter of credit exceeds the cost of completing the work, the County shall release the remainder to the rightful claimant.

D. If the amount of the bond, deposit, or letter of credit is less than the cost of completing the work, the applicant shall be liable for the difference and, upon demand, shall pay such liability to the County.

E. If the County completes the work necessary to satisfy any requirement of this code or condition of approval and assesses the cost to other parties, those parties may enforce the performance agreement as third party beneficiaries.

CHAPTER 20
REVIEW PROCEDURES

ARTICLE 20
BASIC PROVISIONS

20.010 - PURPOSE OF REVIEW PROCEDURES

The purpose of this chapter is to establish uniform procedures for reviewing permit applications and for making decisions on matters pertaining to the use and development of lands within Klamath County. It is the intent of this chapter to provide Review Procedures ensuring that the amount of private and public resources devoted to reaching a particular decision is commensurate with its complexity and potential impact. These procedures are designed to encourage public familiarity with and understanding of how land use decisions are reached, and increase the overall speed by which land use decisions are made.

20.020 - TYPES OF REVIEW PROCEDURES

All reviewing bodies shall be governed by the Comprehensive Plan policies, in order to achieve the purposes set forth above, the following procedures are established:

A. Pre-application Conference Procedure

B Administrative Review Procedure

C. Hearings Officer Review Procedure

D. Planning Commission Review Procedure

E. Board of County Commissioners Review Procedure

20.030 STATEMENT SUPPORTING DECISION (ORS 215.416(9)-(10))

Written notice of the approval or denial will be given to all parties to the proceeding. Approval or denial of any quasi-judicial permit application under this code will be based on and accompanied by a brief statement that:

A. Explains the criteria and standards considered relevant to the decision;

B. States the facts relied on in rendering the decision; and

C. Explains the justification for the decision based on the criteria, standards and facts set forth.

20.040 - CONDITIONS OF APPROVAL

A. General Authorization to Impose Conditions of Approval

In approving any type of development application, the Review Body is authorized to impose such conditions as may be necessary to assure compliance with the applicable provisions of this code, the Comprehensive Plan, the Urban Area Transportation System Plan, the state Transportation Planning Rule, or other requirements of law. Any conditions attached to approvals will be directly related to the impacts of the proposed use or development and will be roughly proportional in both extent and amount to the anticipated impacts of the proposed use or development.

1. In the case of transportation impacts, conditions needed to meet operations and safety standards and provide the necessary right-of-way and improvements to develop the future planned transportation system may be imposed. Conditions of approval that may apply include but are not limited to:

    a. Crossover and/or reciprocal easement agreements for all adjoining parcels to facilitate future access between parcels.

    b. Access for new developments that have proposed access points that do not meet the designated access spacing policy and/or have the ability to align with opposing access driveways.

    c. Right-of-way dedications for future planned roadway improvements.

    d. Half-street improvements along site frontages that do not have full-buildout improvements in place at the time of development.

B. Compliance with Conditions Required

An applicant who has received development approval will comply with all conditions of approval in a timely manner. The County may modify, alter, suspend, or revoke an approved application for noncompliance with conditions of approval.

C. Enforcement and Penalties for Noncompliance with Conditions

If the County modifies, alters, suspends, or revokes an approved application for noncompliance with conditions of approval, it may proceed under the penalty provisions of Article 14 and/or schedule a public hearing before the Board of Commissioners. At the conclusion of any such hearing, and based on findings of fact and conclusions of law, the Review Body shall take such action on the application as it deems appropriate under the provisions of this

code. Notice of any hearing scheduled under this Section will be served on the owner of record of the subject property and, if different from the owner, the applicant or operator under the application in the same manner as summons is served under Oregon Rules of Civil Procedure. Notice to all others will be accomplished pursuant to KCLDC.

D. Modification of Conditions Previously Approved

At an applicant's request, the County may modify or amend one or more conditions of approval for an application previously approved and final. Decisions to modify or amend final conditions of approval that do not qualify as ministerial decisions under KCLDC Section 22.040 will be made by the Review Body with initial jurisdiction over the original application using the same type of review procedure as the original review.

ARTICLE 21
PRE-APPLICATION CONFERENCE PROCEDURE

21.010 - PURPOSE

The purpose of the pre-application conference is to acquaint potential applicants with the procedures and requirements for filing, processing, and reviewing a development permit governed by this code prior to submission of an application. Pre-application conferences shall take place prior to filing an application and may be subject to a fee as established by the Board of Commissioners.

21.020 - SCHEDULING

At the time an inquiry into a development permit is directed to the Planning Department, a meeting may be scheduled at the discretion of the Planning Director or his/her designee for a time mutually acceptable to the applicant and planning staff. Failure to conduct a pre-application conference shall not prohibit the applicant from submitting an application.

21.030 - CONTENT

During the pre-application conference, the following issues may be discussed, as appropriate.

A. Requirements for filing an application including application forms, fees, and the submission of factual documentation about the proposal;

B. Procedural requirements for review and/or a public hearing on the proposal;

C. Substantive review criteria contained in the Comprehensive Plan and Land Development Code; and

D. Opportunities and constraints relating to the proposal resulting from policies and regulations contained in the Comprehensive Plan and Land Development Code.

21.040 - NOTICE, HEARING AND APPEAL

Because a pre-application conference is not a land use decision, no notice, hearing or appeals shall be provided. The discussions of a pre-application conference shall not be binding on any party. For application sites located adjacent to a state roadway or where proposals are expected to have an impact on a state transportation facility, ODOT shall be invited to participate in the conference.

ARTICLE 22
ADMINISTRATIVE REVIEW PROCEDURE

22.010 - PURPOSE

The purpose of the Administrative Review Procedure is to provide for ministerial review of certain change of land use and development proposals, and to provide for the expeditious review of actions involving limited discretionary judgment for which notice may be required by Oregon law. The changes of land use or development permits reviewed under this procedure generally have minimal impact on adjacent lands or persons and may be subject to a fee as established by the Board of Commissioners. (ORS 215.042; ORS 215.416(1))

22.020 - RULES OF PROCEDURE

A. The Planning Department shall be governed by Chapter 30 of this Code for the conduct of administrative reviews. Chapter 30 shall be available upon request to all individuals.

B. Submitted applications will be reviewed by the Planning Department as specified in this Article. Applicants whose applications are found to be incomplete will be notified in writing of identified deficiencies and processed in accordance with ORS 215.427

C The Planning Department relies on the integrity of the applicant and the veracity of the application. If the applicant, the applicants representative, or apparent representative, makes a misstatement of fact on the application regarding factual material that is relied upon by the Planning Director, his/her designee or a Review Body in making a decision to approve the application, the Planning Director may, upon notice to the applicant and subject to hearing rights, declare the application denied.

D. A consolidated permit review procedure shall be available for use at the option of the applicant. Under the consolidated procedure an applicant may apply at one time for all permits or zone changes needed for a development project. The consolidated procedure shall be subject to the time limitations set out in ORS 215.427, except when such applications are filed concurrently and considered jointly with a comprehensive plan amendment. (ORS 215.416(2))

22.030 - TYPE I REVIEW

A. Unless referred to hearing by the Planning Director in accordance with this Section, Type I Review, which is limited to review for compliance with clear and objective standards of this code, shall be conducted without notice or a public hearing.

B. Review and Decision

1. The Planning Director or his/her designee shall review the Type I application within 15 days of receipt of a complete application and determine its

compliance with applicable standards and other relevant provisions of this code.

2. An authorized signature showing compliance or non-compliance shall constitute the final decision.
3. The Planning Director, at his/her discretion, may refer review of the application to a Type II Review procedure in accordance with ORS 215.416 and ORS 215.427, or to an appropriate Review Body for a full quasi-judicial hearing in accordance with ORS 197.763.
4. A tentative decision reached under a referred Type II Review procedure may be appealed to the Board of County Commissioners within 12 days of mailed notice of the tentative decision in accordance with procedures set forth in Article 33.

22.040 - TYPE II REVIEW (ORS 215.416 and ORS 215.427)

A. Public Hearing and Notice.

1. Unless referred to public hearing by the Planning Director in accordance with this Section, Type II Review shall be conducted without a public hearing.
2. Notice shall be provided prior to the review in accordance with Article 32 and ORS 215.416.

B. Review and Decision.

1. The Planning Director or his/her designee shall review the application within 30 days of receipt of a land use permit application and determine whether the application is complete as submitted. Noncompliance with applicable provisions of this Code shall be identified in writing and incorporated into the official application file (ORS 215.427(2)).
2. In accordance with Section 31.120, the Planning Director shall reduce a tentative decision to writing within 90 days of the application being deemed complete.
3. The Planning Director, at his/her discretion, or if requested by a person receiving a request for comment notice or otherwise demonstrably affected by the proposed action, may refer review of the application to an appropriate Review Body for a quasi-judicial hearing.

C. Appeal.

A decision reached under the Type II Review procedure may be appealed to the Board of County Commissioners within 12 days of the mailing of notification of the tentative decision as set forth in Article 33.

22.050 - REGISTRY

The Planning Director shall maintain a data base of land use decisions made within the previous 12 months without providing advance notice of the review and an opportunity for a hearing. (ORS 215.416(12))

ARTICLE 24
HEARINGS OFFICER REVIEW PROCEDURE

24.010 - PURPOSE

The purpose of the Hearings Officer Review Procedure is to provide for the conduct of evidentiary, quasi-judicial hearings involving discretionary judgment in the application of standards and review criteria to specific factual situations. The Hearings Officer Review Procedure allows for an impartial tribunal, the opportunity to present evidence, assurance against ex parte contacts, and the means to create a record of hearings providing findings of fact and conclusions of law.

24.020 - APPOINTMENT AND DUTIES

A. The Board of County Commissioners may appoint the Hearings Officer to serve at the pleasure of the Board (ORS 215.406). The Hearings Officer may appoint a Deputy as is necessary, subject to confirmation by the Board of County Commissioners.

B. The Hearings Officer and the Deputy Hearings Officer shall be appointed solely with regard to their qualifications for the duties of their position and shall have such training and experience as will qualify them to conduct hearings on land use matters and other duties conferred upon them.

C. The Hearings Officer may act on behalf of the Board of County Commissioners in hearing and deciding land use matters governed by this code. The Deputy Hearings Officer shall assist the Hearings Officer in the performance of appointed duties, and shall have all the duties and powers of the Hearings Officer in the event of the absence or the inability of the Hearings Officer to act.

D. The Hearings Officer shall consider land use issues pursuant to Article 14 (Enforcement), and Article 44 (Conditional Use Permit) of the Klamath County Land Development Code. Issues referred by the Planning Director in accordance with Section 22.040 may also be heard by the Hearings Officer.

E. In the absence of a hearings officer a planning commission or the governing body may serve as hearings officer with all the powers and duties of a hearings officer. (ORS 215.406(2))

24.030 - RULES OF PROCEDURE

A. The Hearings Officer shall follow Chapter 30 and 31 of this Code for the conduct of hearings.

B. The Hearings Officer relies on the integrity of the applicant and the veracity of the application.

C. If the applicant, the applicants representative, or apparent representative, makes a misstatement of fact on an application regarding factual material that is relied upon in making a decision, the decision maker may, upon notice to the applicant and subject to hearing rights, declare the application void.

D. In the event of emergencies, public disorder in any hearing or meeting, or public speakers who refuse to recognize the chair or yield the floor at the Hearings Officer's request, the Hearings Officer may, at his/her discretion, exercise any of the following measures:

1. Immediately declare a recess.
2. Adjourn or continue the hearing to a place and time certain.
3. Request appropriate assistance in securing removal of uncooperative persons from the hearing or public meeting.

24.040 - PUBLIC HEARING AND NOTICE

A. The Planning Department shall schedule public hearings and provide notice of Hearings Officer Review as provided by Articles 31 and 32. (ORS 197.763 & ORS 215.416)

B. At a scheduled hearing, the Hearings Officer may, upon request by the applicant, continue or reschedule a public hearing to a date and time certain. The applicant or a representative for the applicant must be present at the hearing. If no person is present to represent the applicant, the application may be denied at the discretion of the Hearings Officer. A new application would then have to be made.

24.050 - REVIEW AND DECISION (ORS 197.763)

A. Public hearings conducted by the Hearings Officer shall be called to order at the date and time specified in the public notice and shall proceed in accordance with Section 31 100.

B. The Hearings Officer may impose a 15 minute time limit upon witnesses.

C. The Hearings Officer will officially open the hearing by stating the name of the applicant, the case number, then ask for the staff report from the Planning Department staff.

D. The Hearings Officer will ask the applicant and supporting proponents to come forward, be sworn in, and then testify.

E. The Hearings Officer will then call for opponents to come forward, be sworn in and then testify.

F. The Hearings Officer will then provide an opportunity for proponent rebuttal. Generally, surrebuttal to the proponent or opponent's rebuttal is allowed, at the discretion of the Hearings Officer, provided a final rebuttal opportunity is provided the proponent in accordance with ORS 197 763.

G. After all testimony is taken, the Hearings Officer shall close or continue the hearing.

H. The Hearings Officer may, upon good cause, continue the hearing to a date and time certain without further notice in accordance with ORS 197.763(6).

I. If the Hearings Officer is not present, the Planning Director or his/her designee shall open the hearing on the agenda items and continue the hearing to a date and time certain, to be posted on location at the time of the hearing by Planning Department staff.

J. At the conclusion of the final evidentiary hearing, the Hearings Officer may make a decision to approve, conditionally approve, or deny the request based on review standards and criteria set forth in this code, or shall continue the matter to a date and time certain for a decision.

K. A decision of the Hearings Officer shall incorporate findings of fact and conclusions of law based on substantial evidence in the whole record. The application shall not be approved if the proposed use of land is found to be in conflict with the comprehensive plan and other applicable land use regulation or ordinance provisions. The approval may include such conditions as are authorized by statute or county legislation. (ORS 215.416(4))

L. A decision of the Hearings Officer shall not be final, subject to 24.050 below, until it is reduced to writing in the form of a final order in accordance with Section 31.120. The Hearings Officer will render a final order within 15 days of the hearing.

M. An application before the Hearings Officer may be reopened to consider new information which was unavailable to the applicant at the time of the original hearing. Any request to reopen the hearing must be made in writing and received by the Planning Department within 5 days of the date the order was mailed In the request to re-open the hearing the applicant must state the grounds for re-opening. In addition, the applicant must also provide the nature of the new information, how it affects the application, and why this information was unavailable at the time of the original hearing.

24.060 - APPEAL

An order of the Hearings Officer may be appealed to the Board of County Commissioners within 7 days of its mailing as set forth in Article 33. (ORS 215.422)

ARTICLE 26
PLANNING COMMISSION REVIEW PROCEDURE

26.010 - PURPOSE

The purpose of the Planning Commission Review Procedure is to provide for the conduct of public hearings necessary to reach quasi-judicial decisions involving discretionary judgment in the application of standards and review criteria to factual situations, or to make legislative recommendations involving the balancing of divergent positions. The change of land use associated with development proposals reviewed under this procedure may have significant impacts on adjacent lands or persons, or involve policy decisions affecting a broad range of lands or persons. (ORS 215.020; ORS 215.110)

26.020 - RULES OF PROCEDURE

A. Organization of the Planning Commission.

1. The Planning Commission shall, at its regular meeting in July each year, elect and install one of its members to serve as Chairman and another to serve as Vice Chairman, provided, however, a member shall not be eligible for election as Chairman for two consecutive terms, except as approved by unanimous consent of the Planning Commission members voting on the question.
2. Nominations for officers shall be by oral motion duly made and seconded, placing a name for Planning Commission consideration. At the close of nominations, the Planning Commission shall vote orally upon the names, which were nominated for the relevant office.
3. When a matter is called for a vote, the Presiding Officer shall, before a vote is taken, state the question before the Planning Commission in general terms and shall announce the decision of the Planning Commission after such vote.

B. Meetings.

1. The Planning Commission shall meet regularly on the fourth Tuesday of each month beginning at 6:00 p.m. Planning Commission meetings will conclude at 10:00 P.M, unless the Commission by unanimous vote agrees to extend the time. Unconcluded agenda items will be continued by vote to a date and time certain prior to adjournment of the Planning Commission.
2. The Planning Commission may cancel or reschedule any of its regular meetings and provide for special meetings by action at its regular meeting.
3. Any matters not covered herein shall be in accordance with Klamath County standards as determined by legal counsel.

C. Conduct of Hearing before the Planning Commission.

1. Insofar as possible, the Planning Commission members should remain free from personal interest or pre-hearing contacts on matters heard by them.

Planning Commission members shall reveal any substantial interest or pre-hearing contact made to them with regard to the proceeding at the commencement of such proceeding. If such interest or contact impairs the ability to vote on the matter, he/she shall so state and shall abstain there from. Any Planning Commissioner abstaining from a hearing will also remove him/her self from the table/dais.

2. After opening the public hearing in accordance with Article 31, the Chairman will request a Planning Staff report on the matter before the commission. 15 minutes will be allocated for the report from staff and additional time may be allowed for questions and answers posed by the commission. Following the staff report, the chairman will call for testimony in the following order:

    a) The applicant, who will be allowed 15 minutes to present testimony;

    b) Others in favor of the application, who will be allowed five minutes each;

    c) Those opposed to the application, who will be allowed five minutes each,

    d) Those neutral to the application, agencies and special districts, who will be allowed five minutes each; and

    e) Rebuttal by the applicant or the applicant's representative, who will be allowed 10 minutes to orally rebut testimony provided at the hearing.

D. Agenda

1. The order of business at all meetings shall be determined by the agenda, which shall be delivered in advance of the meeting to the Planning Commission members in accordance with ORS 197.763.

2. Any item may be taken out of order by a majority vote of the Planning Commission.

3. Actions of the Planning Commission are limited to the prepared agenda. Non-action informational items may be included on the night of the meeting at the oral request of the Planning Director or a Planning Commissioner in attendance.

E. Attendance, Quorum, and Voting.

1. Attendance of at least five (5) of the (9) Planning Commission members shall be necessary for a quorum. (ORS 215.030)

2. Voting on any action shall be by majority vote of the total Planning Commission Members present and with a minimum of 3 votes necessary to carry any decision.

3. Voting shall be expressed by the raising of the right hand when called for by the Presiding Officer. Planning Commission members not voting negatively or specifically abstaining shall be counted as voting affirmatively. All votes shall be recorded by the Secretary.
4. If a tie vote results that item shall be continued for decision to the next regular meeting of the Planning Commission or to a special meeting determined by the Planning Commission to which notice of such item can be duly given.

26.030 - PUBLIC HEARING AND NOTICE

A. The Planning Director shall schedule public hearings and provide notice of Planning Commission Review in accordance with state law, as provided by Article 31 and Article 32.

B. At the scheduled hearing, the Planning Commission may, upon request by the applicant, continue or reschedule a public hearing to a date and time certain. The applicant or a representative for the applicant must be present at the hearing. If no person is present to represent the applicant, the application may be denied at the discretion of the Planning Commission.

26.040 - REVIEW AND DECISION

Public hearings conducted by the Planning Commission shall be called to order by the Chairperson at the date and time specified in the public notice. The order of proceedings shall conform to Section 31.100.

A. The Planning Commission may continue an evidentiary hearing to a date and time certain on a matter before it, if in its judgment, additional time is necessary to review the proposal or to receive additional information regarding the proposal. Before continuing or rescheduling an application the Planning Commission will determine a decision will be made within the required time period as stipulated by Article 30, Section 30.020 of the Klamath County Land Development Code and ORS 215.427. In the alternative, the applicant may voluntarily waive time period requirements to allow for a continued hearing. (ORS 215.427(4))

B. If a quorum of the Planning Commission is not present, the hearing is automatically continued to a date and time certain, to be posted on location at the time of the hearing by the Planning Department staff.

C. Quasi-judicial hearings

1. At the conclusion of the final evidentiary hearing, the Planning Commission may make its decision to approve, conditionally approve, or deny the request based on review standards and criteria set forth in this code, or shall continue the matter to a date and time certain for a decision.

2. A decision of the Planning Commission shall incorporate findings of fact and conclusions of law based on substantial evidence in the whole record.
3. A decision of the Planning Commission shall not be final until it is reduced to writing in the form of a final order in accordance with Section 31.120.

D. Subdivision and Planned Unit Development Review.

1. At the conclusion of the final evidentiary hearing, the Planning Commission shall make its decision based on review standards and criteria set forth in the code.
2. A decision of the Planning Commission shall incorporate findings of fact and conclusions of law based on substantial evidence of the whole record.
3. A decision of the Planning Commission shall not be final until it is reduced to writing in the form of a final order in accordance with Section 31.120.

E. Hearings for legislative changes to the Comprehensive Plan, Comprehensive Plan Maps, Land Development Code or Zoning Map.

1. At the close of the public hearing, the Planning Commission shall make a recommendation to the Board of County Commissioners on the action before it. (ORS 215.110)

26.050 - APPEAL

An order of the Planning Commission may be appealed to the Board of County Commissioners within 7 days of its mailing as set forth in Article 33. (ORS 215.422)

ARTICLE 28
BOARD OF COUNTY COMMISSIONERS REVIEW PROCEDURE

28.010 - PURPOSE

The purpose of the Board of County Commissioners Review Procedure is to provide for the conduct of hearings to reach quasi-judicial decisions involving discretionary judgment in the application of standards and review criteria to factual situations, to adjudicate decisions of other review bodies, or to make legislative decisions involving the balancing of divergent positions. Changes of land use resulting from proposals reviewed under this procedure may have significant impacts on adjacent lands or persons, or involve policy decisions affecting a broad range of lands or persons.

28.020 - RULES OF PROCEDURE

A. The Board of County Commissioners shall be governed by Chapter 30 of this Code for the conduct of land use hearings. Chapter 30 shall be available upon request to all individuals at any hearing.

B. Chapter 30 shall guarantee to all parties the opportunity to be heard, to present evidence, to have a record developed, and to have a decision rendered incorporating findings of fact and based on conclusions of law supported by substantial evidence in the whole record.

C. The Board of County Commissioners relies on the integrity of the applicant and the veracity of the application. If the applicant, the applicants representative, or apparent representative, makes a misstatement of fact on the application regarding factual material that is relied upon by the Review Body in making a decision whether to approve the application, the Review Body may, upon notice to the applicant and subject to hearing rights, declare the application denied.

28.030 PUBLIC HEARING AND NOTICE

A. The Planning Director shall schedule public hearings and provide notice of Board of County Commissioners Review in accordance with state law and as provided by Article 31 and Article 32.

B. At the scheduled hearing, the Board of County Commissioners may, upon request by the applicant, continue or reschedule a public hearing to a date and time certain. The applicant or a representative for the applicant must be present at the hearing. If no person is present to represent the applicant, the application may be denied at the discretion of the Board of County Commissioners.

28.040 - REVIEW AND DECISION

A. Public hearings conducted by the Board of County Commissioners shall be called to order by the Chairperson at the time and date specified in the public notice. The order of proceedings shall conform to Section 31.100.

B. The Board of County Commissioners may continue an evidentiary hearing to a date and time certain on a matter before it if, in its judgment, additional time is necessary to review the proposal or to receive additional information regarding the proposal.

C. If a quorum of the Board of Commissioners is not present, the hearing agenda is automatically continued to a date and time certain, to be posted on location at the time of the hearing by Planning Department staff.

D. Quasi-judicial and appeal hearings.

   1. At the conclusion of the final evidentiary hearing, the Board of County Commissioners may make its decision to approve conditionally approve, or deny an application based on review standards and criteria set forth in this code; affirm, reverse or remand an appeal; or shall continue the matter to a date and time certain for a decision.
   2. A decision of the Board of County Commissioners shall incorporate findings of fact and conclusions of law based on substantial evidence in the whole record.
   3. A decision of the Board of County Commissioners shall not be final until it is reduced to writing in the form of a final order in accordance with Section 31.120.

28.050 - APPEAL

A land use decision of the Board of County Commissioners shall be final unless appealed to the Oregon Land Use Board of Appeals (LUBA) as set forth in ORS 197.805 through 197.860. An appeal to the Oregon Land Use Board of Appeals does not stay the Board of County Commissioner decision unless LUBA grants a stay in accordance with ORS 197.845.

CHAPTER 30
PUBLIC HEARINGS, NOTICE AND APPEAL

ARTICLE 30
BASIC PROVISIONS

30.010 – PURPOSE

The purpose of this chapter is to prescribe procedures for public hearings, public notice and appeal of decisions reached as a result of the review procedures described in Chapter 20. The intent of this Chapter is to guarantee to all parties the opportunity to be heard, to present evidence, to have a record developed, and to have a decision rendered incorporating findings of fact and based on conclusions of law supported by substantial evidence in the whole record.

30.020 - APPLICATIONS AND STAFF REPORTS

A. All documentation relied upon by an applicant in support of a development permit or other action governed by this code must be submitted in writing to the Planning Department by the date of notice established by the Planning Director in advance of reviews or quasi-judicial hearings. Administrative review or a public hearing shall not be scheduled or noticed until the permit application is deemed complete by the Planning Director or his/her designee (*ORS 215.427*).

B. Klamath County will take final action on an application for a permit, limited land use decision, or zone change for land within an urban growth boundary, and on application for mineral aggregate extraction, within 120 days after the application is deemed complete. The County will take final action on all other applications for a permit, limited land use decision or zone change within 150 days after the application is deemed complete. The time periods established in this subsection may be extended at the written request of the applicant. *(ORS 215.427(4))*

C. Staff reports that include proposed findings addressing applicable review criteria shall be available for public inspection at least seven days prior to the first public hearing on the matter (*ORS 197.763(4)*). When a discretionary land use permit decision is made without a public hearing, a staff report that describes the relevant standards and criteria of this code shall be available at the time of Notice of Tentative Staff Decision (*ORS 216.416(8) & (11)*).

ARTICLE 31
PUBLIC HEARINGS

31.010 - RESPONSIBILITY OF THE PLANNING DIRECTOR *(ORS 215.042)*

The Planning Director or his/her designee shall perform the following duties pertaining to administrative and/or land use permit reviews and public hearings:

A. Establish and maintain a schedule of land use permit review and public hearing dates;

B. Refer and schedule land use permit applications to the appropriate Review Body following applications being deemed complete (*ORS 215.427(2*));

C. Conduct the correspondence of the Review Body;

D. Give notice in accordance with Article 32 and State law. Mail written notice of tentative decisions on Type II permits made without a hearing to applicants, their representatives and the owners of record of adjoining property. (*ORS 197.763, ORS 215.223, ORS 215.416 and ORS 215.503*);

E. Maintain a record and enter into the record relevant dates such as those of giving notice, hearings, postponement and continuances, and a summary of action taken by the applicable Review Body;

F. Prepare and maintain minutes of public meetings conducted under this code; and

G. Mail a copy of the final order to applicants, their representatives and any parties who participated in a public hearing on the matter. Mail written notice of the approval or denial to all other parties to the proceeding. *(ORS 215.416(10))*

31.020 - SPECIAL HEARINGS

The Planning Director may schedule special hearings after consulting with the presiding officer of the Review Body in order to accommodate and promote efficient hearing agendas.

31.030 - CHALLENGES TO IMPARTIALITY

Except for hearings by the Board of County Commissioners concerning legislative amendments to the Comprehensive Plan or Land Development Code involving broad public policy, a party to a hearing or a member of a Review Body may challenge the impartiality of an individual to participate in the hearing and decision of the matter.

A. A challenge shall state, by affidavit, the factual situation relating to the challenge including, but not limited to: an alleged personal bias, prejudgment, ex parte contact, or personal interest in the matter.

B. The challenge shall be delivered to the Planning Director at least 48 hours prior to the time set for a public hearing on the matter.

C. The Planning Director shall inform the Review Body's chairperson of the challenge and the person(s) at whom the challenge is directed.

D. The Review Body shall deal with the challenge before proceeding with a hearing.

E. The challenge shall be incorporated into the record of the hearing.

31.040 – DISQUALIFICATION

Except for hearings by the Board of County Commissioners concerning legislative amendments to the Comprehensive Plan or Land Development Code involving a substantial area and number of property owners or issues of broad public policy, no member of a hearing body shall participate in a discussion of the proposal or vote on the proposal when any of the following conditions exist:

A. Any of the following have a direct or substantial financial interest in the proposal: the Review Body member or the member's spouse, brother, sister, child, parent, father-in-law, mother-in-law, any business in which the member is serving or has served within the previous two years, or any business which the member is negotiating for or has an arrangement or understanding concerning prospective partnership or employment;

B. The member owns property within the area entitled to receive notice of the public hearing;

C. The member has a direct private interest in the proposal; or

D. For any other reason, the member has determined that participation in the hearing and decision cannot be in an impartial manner.

31.050 - PARTICIPATION OF OFFICERS OR EMPLOYEES

No officer or employee of Klamath County who has a financial or other private interest in a proposal shall participate in discussion with or give an official opinion to the hearing body on the proposal without first declaring for the record the nature and extent of such interest.

31.060 - EX PARTE CONTACTS

Except for hearings by the Board of County Commissioners concerning a Comprehensive Plan or Land Development Code Amendment which involves a substantial area and number of property owners, or an issue of broad public policy, the general public has a right to have hearing body members free from pre-hearing or ex parte contacts on matters heard by them. It is recognized that a countervailing public right is free access to public officials on any matter.

A. Hearing body members shall reveal any pre-hearing or ex parte contacts with regard to any matter before the commencement of the public hearing on the matter. If such contacts have impaired the member's impartiality or ability to vote on the matter, the member shall so state and not participate in the hearing.

B. Contacts between County staff and the Review Body shall not constitute an ex parte contact (*ORS 215.422(4*)).

C. No member of the Board of County Commissioners shall be barred from participating in a hearing concerning a Comprehensive Plan or Land Development Code amendment involving a substantial area and large number of people, or any other issue of broad public policy because of an ex parte contact.

31.070 - ABSTENTION OR DISQUALIFICATION

Except for hearings by the Board of Commissioners concerning either a code amendment or a Plan revision which involves a substantial area and number of property owners, or an issue of broad public policy, disqualification for reasons other than the member's own judgment may be ordered by a majority of the members of a hearing body present and voting. The member who is the subject of the motion for disqualification may not vote on the motion.

31.080 - RIGHTS OF DISQUALIFIED MEMBER OF THE REVIEW BODY

A. An abstaining or disqualified member of the Review Body may be counted for purposes of forming a quorum. A member who represents personal interest at a hearing may do so only by abstaining from voting on the proposal, physically vacating the seat on the Review Body, and making full disclosure of his or her status and position at the time of addressing the Review Body.

B. If all members of a Review Body abstain or are disqualified, all members present after stating their reasons for abstention or disqualification shall by so doing be re-qualified and proceed to resolve the issues.

C. Except for hearings by the Board of Commissioners concerning either a change of zone or comprehensive plan designation which involves a substantial area and number of property owners, or an issue of broad public policy, a member absent during the presentation of evidence in a hearing may not participate in the deliberations or final decision regarding the matter of the hearing unless the member has reviewed the evidence received.

31.090 - BURDEN AND NATURE OF PROOF

A. Except for hearings by the Board of Commissioners concerning a legislative amendment to the Comprehensive Plan and/or Land Development Code involving a substantial area and number of persons, the burden of proof is upon the proponent to show that the proposal complies with or is consistent with the Comprehensive Plan and/or Land Development Code.

B. Proposals must be supported by substantial evidence in the whole record showing compliance with all applicable elements of the Comprehensive Plan and Land Development Code.

C. Approval or denial of a permit application shall be based on standards and criteria set forth in this code or other appropriate ordinance or regulation of the county and which shall relate approval or denial of a permit application to this code and any Comprehensive Plan for the area in which the proposed use of land would occur and to the Land Development Code and Comprehensive Plan for the county as a whole. *(ORS 215.412)*

D. The more drastic the proposed change, or the greater the impact of the proposal on other land uses or properties, the greater the burden of proof upon the proponent to show how the proposal complies with or is consistent with the Comprehensive Plan and Land Development Code.

31.100 - ORDER OF PROCEEDINGS

An order of proceedings for the conduct of a hearing will depend, in part, on the nature of the hearing. The following may be supplemented by rules of procedure.

A. Before receiving information on the matter, the presiding officer of the hearing shall note for the record, or act on the following issues:

1. Challenges to the impartiality of any member of the Review Body;

2. Conflict of interest or ex parte contacts by members of the Review Body;

3. Abstentions or disqualifications of the Review Body;

4. The nature of any site visit to the land or property in question by any member of the Review Body; and

5. Objections to the proceedings based on jurisdictional grounds.

B. Before receiving information on the matter, the presiding officer of the hearing shall make a statement to those in attendance that: *(ORS 197.763(5))*

1. Lists the applicable review criteria of the Comprehensive Plan and Land Development Code pertinent to the hearing;

2. States that testimony, arguments and evidence must be directed to the applicable review criteria of the Comprehensive Plan or Land Development Code pertinent to the hearing or other criteria in the Comprehensive Plan or Land Development Code the person believes to apply to the decision; and

3. States that failure to raise an issue with sufficient specificity to afford the Review Body or other parties an opportunity to respond to the issue may preclude future appeal based on that issue.

C. The Review Body shall hear the staff report and recommendation.

D. The Review Body shall open the evidentiary hearing for public testimony and submittal of evidence and arguments on the matter.

1. Testimony shall be received in a manner prescribed by the presiding officer.

2. Unless otherwise specified all questions will be directed to the presiding officer or chairperson of the Review Body.

3. Before any person testifies at a quasi-judicial hearing, that person shall establish standing in the matter as per Section 31.110.

E. The chairperson of the Review Body may take official notice of information relating to the issue.

1. Provisions of state law, a Klamath County ordinance, resolution, rule or officially promulgated policy, or other public records and facts judicially noticeable by ORS Chapter 41 may be noticed by the presiding officer.

2. A matter officially noticed need not be established by evidence and may be considered by the Review Body in deciding the matter.

3. Parties requesting official notice shall do so on the record.

4. Any matter given official notice may be rebutted.

F. At the close of public testimony, the record shall be closed to public testimony and the submittal of evidence and the Review Body may discuss the issue.

G. All evidence, testimony, deliberations, and decisions shall be made before the public, shall be recorded, and shall be made a part of the record.

31.105 – CONDUCT OF QUASI-JUDICIAL HEARING (*ORS 197.763*).

A. An issue that may be the basis for an appeal to the Land Use Board of appeals shall be raised not later than the close of the record at or following the final evidentiary hearing on the proposal. Such issues shall be raised and accompanied by statements or evidence sufficient to afford the Review Body and parties an opportunity to respond to each issue.

B. If new evidence is submitted less than seven days before or during a public hearing, any party shall be entitled to a continuance or to have the record left open if the party has not had the opportunity to review the evidence. Such hearing continuance or extension of the record shall be for a minimum of seven days and be continued to a date, time and place certain. When the continuance or extension of the record is requested by the applicant, any applicable 120/150 day time limitation for final local action shall be extended by the corresponding amount of time.

C. An opportunity shall be provided at a continued hearing for parties to present and rebut new evidence, arguments or testimony. If new written evidence is submitted at the continued hearing, any party may request, prior to the conclusion of the continued hearing, that the record be left open for at least seven days to submit additional written evidence, arguments or testimony for the purpose of responding to the new written evidence.

D. When the Review Body leaves the record open for additional evidence, arguments or testimony, any party may file a written request for an opportunity to respond to the new evidence submitted during the period the record is left open. If such a request is filed, the Review Body shall reopen the record to admit new evidence, arguments or testimony.

31.110 – STANDING

Before any person testifies at a quasi-judicial hearing, that person shall establish standing in the matter before the Review Body. Persons must show that their interests would be adversely affected by a decision or that they are entitled to notice under the provisions of this code. The Review Body may take testimony from a person whose standing is taken under consideration and may make its ruling regarding standing at the time of entry of its decision.

31.115 – DECISION

A. Following the close of the final evidentiary hearing on a matter before it, the Review Body may approve, conditionally approve or deny an application for a change of land use or development proposal, affirm, reverse or remand an issue on appeal, or shall continue the matter to a time and date certain for a decision. Hearings continued for a decision shall not be evidentiary hearings.

B. A matter continued to a date and time certain for a decision shall be held within 45 days of the date the evidentiary hearing record is closed.

C. A decision shall not become final until the Review Body adopts findings of fact and conclusion of law, and the decision is reduced to writing.

D. A final decision, including local appeal, shall be made on all applications within 120 days of the date an application is deemed complete for the purposes of scheduling a public hearing pursuant to Article 32, except as provided for in ORS 215.427.

31.120 - FINAL ORDER

A. A decision of a Review Body on a land use decision shall be based on findings of fact and conclusions of law supported by substantial evidence in the whole record. The Planning Director, County Counsel, or the prevailing party (if designated by the Review Body), shall reduce the decision to writing and prepare the final order. The final order shall include, but not be limited to:

1. Nature of the application or action;

2. Name of the applicant or proponent of the action;

3. Legal description of the affected land;

4. Applicable standards and review criteria from the Comprehensive Plan and Land Development Code upon which the decision is to be based;

5. Statements of facts relevant to the situation and used by the Review Body in making its decision, including but not limited to:

    a. General Background: nature of the request and description of the proposed use, location of the property, plan and zone designations, history of prior actions affecting the property;

    b. Nature of the Site: size, shape, land use, topography, soils, physical characteristics of the property, available utilities and public facilities; and

    c. Nature of the Surrounding Area: land uses of surrounding land, physical characteristics, utilities and public facilities, other environmental and infrastructure characteristics.

6. Reasons supported by substantial evidence in the whole record showing how the factual situation presented addresses the standards and review criteria contained in the Comprehensive Plan and Land Development Code;

7. Conclusions of law, and a decision stating the approval, conditioned approval, or denial of the matter;

8. Order; and

9. Conditions, if applicable

B. A final order shall be prepared within 15 days of the decision.

C. Notice of the decision and a copy of the final order shall be provided via first class mail to the applicant and other persons participating in the decision or requesting notice in writing, and shall enumerate appeal rights.

D. A final order shall be filed with the Board of County Commissioners, the County Clerk's Office, and the Planning Department.

31.130 - RECORD OF PROCEEDINGS

The secretary to the Review Body or his/her authorized representative shall be present at each hearing and shall cause the proceedings to be recorded.

A. Testimony shall be transcribed if required for an appeal, if requested by the Review Body, or if requested and paid for by any other party.

B. The Review Body shall, where practicable, retain as part of the hearing record each item of physical or documentary evidence presented and shall have the items marked to show the identity of the person offering the same and whether presented on behalf of a proponent or opponent.

Exhibits received into evidence shall be retained in the hearing file until after the applicable appeal period has expired, at which time the exhibits may be released to the person identified thereon, or otherwise disposed of.

C. The final order shall be included in the record.

D. Any person shall have access to the record of the proceedings at reasonable times, places and circumstances. A person shall be entitled to obtain copies of the record for a reasonable cost.

ARTICLE 32
PUBLIC NOTICE

32.010 – PURPOSE

The purpose of public notice is to provide an opportunity for affected or interested persons to participate in the local land use review and decision process.

32.020 - NOTICE SCHEDULE

A. The Planning Director shall determine the type of notice for each land use decision, and may provide additional notice, in such a way that all persons reasonably determined to be potentially affected or interested in a local land use decision receive actual notice.

B. The notice requirements for the various types of land use and development decisions are set forth in Section 32.070.

32.030 - TYPES OF NOTICE

A. Published Notice - Notice of a land use review or hearing requiring advance notice by state law and this code shall be published in a newspaper of general circulation in Klamath County on 2 consecutive days not less than 20 days prior to the date of the scheduled review or hearing. *(ORS 215.060; ORS 215.223)*

B. Posted Notice - Notice of a land use review or hearing requiring advance notice by this code shall be posted not less than 20 days prior to the date of the scheduled review or hearing at designated locations in the Federal Post Office in Klamath Falls, the Klamath County Courthouse, the Klamath County Courthouse Annex, the Klamath Falls City Hall, and at other locations as determined by the Planning Director.

C. Mailed Public Hearing Notice - Notice of a quasi-judicial land use hearing shall be mailed by first class mail in the following manner: *(ORS 197.763(3))*

1. No later than 20 days prior to the date of the scheduled review or hearing:

   a. To all owners of real property within 500 feet, including rights-of-way and water bodies, of the subject property for actions involving land planned and zoned for farm or forestry use;

b. To all owners of real property within 250 feet, including rights-of-way and water bodies, of the subject property for actions involving property outside an urban growth boundary that is not zoned for farm or forest use;

c. To all owners of real property within 100 feet, including rights-of-way and water bodies, of the subject property for actions wholly or partially within an Urban Growth Boundary;

d. To a public use airport owner if: *(ORS 215.416(7))*

1) The land use decision could permit development of a structure greater than 35 feet in height, and the property is inside the runway "approach surface" as defined by the Oregon Department of Aviation; and

2) The subject property is within 5,000 feet of the side or end of a runway at the Beaver Marsh airstrip, the Chiloquin airstrip, Crescent Lake airstrip or the Malin airstrip; or

3) The subject property is within 10,000 feet of the side or end of a runway at Kingsley Field.

e. To each mailing address for tenants of a mobile home park for a zone change involving property encompassing all or part of a mobile home park as identified in ORS 446.003. Such notice may not be mailed more than 40 days before the date of the first hearing on a zone change. *(ORS 215.223(7))*

f. To all property owners affected by a legislative zone change involving a substantial area and number of property owners in accordance with ORS 215.503, if applicable.

g. Notice shall also be provided to any neighborhood or community organization formally recognized by the Board of Commissioners and whose boundaries include the site. *(ORS 197.763(2)(b)).*

h. Any governmental agency that is entitled to notice under an intergovernmental agreement entered into with the County or is otherwise potentially affected by the proposal. For application sites located adjacent to a state roadway or where proposals may have an impact on a state transportation facility, notice of the decision shall be sent to ODOT.

D. Mailed Tentative Decision Notice - Notice of a quasi-judicial land use decision made without a hearing shall be mailed by first class mail in the following manner: *(ORS 215.416(11)(a))*

1. No later than 5 days following a written decision rendered pursuant to a Type II Administrative Review Procedure, provided the notice states the 12-day period for appeal of the tentative decision starts on the date the tentative decision is mailed:

    a. To all owners of real property within 750 feet, including rights-of-way and water bodies, of the subject property for actions involving land planned and zoned for farm or forestry use;

    b. To all owners of real property within 250 feet, including rights-of-way and water bodies, of the subject property for actions involving property outside an urban growth boundary that is not zoned for farm or forest use;

    c. To all owners of real property within 100 feet, including rights-of-way and water bodies, of the subject property for actions wholly or partially within an Urban Growth Boundary;

    d. To any governmental agency that is entitled to notice under an intergovernmental agreement entered into with the County or is otherwise potentially affected by the proposal. For application sites located adjacent to a state roadway or where proposals are expected to have an impact on a state transportation facility, notice shall be sent to ODOT.

2. Notice shall also be provided to any neighborhood or community organization formally recognized by the Board of Commissioners and whose boundaries include the site. *(ORS 215.416(11)(c))*

E. Persons who wish to receive mailed notice of hearing continuances must file a request with the Planning Department. Mailed notice of hearing continuances shall be limited to those persons who request such notification in writing; all others shall rely on posted or published notices as appropriate.

F. Ownership List - For purposes of mailed property owner notification, owners of record shall be those listed on the most recent property tax assessment role of the Klamath County Assessor.

32.040 - CONTENT OF MAILED NOTICE *(ORS 197.763; ORS 215.416)*

A. Mailed notice of a public hearing shall:

1. Explain the nature of the application and the proposed use or uses which could be authorized;

2. List the applicable criteria from the Comprehensive Plan and Land Development Code that apply to the application being considered;

3. Set forth the street address or other easily understood geographical reference to the subject property;

4. State the date, time and location of the hearing;

5. State that a failure to raise an issue in the course of the hearing, either in person or by letter, or failure to provide statements or evidence sufficient to afford the Review Body an opportunity to respond to the issue precludes appeal based on that issue;

6. Include the name of the Planning Department staff person to contact and the telephone number where additional information may be obtained;

7. State that a copy of the application, all documents and evidence relied upon by the applicant, and applicable criteria are available for inspection at no cost, and will be provided at reasonable cost;

8. State that a copy of the staff report will be available for inspection at no cost at least seven days prior to the hearing, and will be provided at reasonable cost; and

9. Include an explanation of the requirements for submission of testimony and the procedure for conduct of the hearing.

B. Mailed notice of an administrative Type II decision shall:

1. Explain the nature of the application, the proposed use or uses which could be authorized, and the nature of the decision;

2. Set forth the street address or other easily understood geographical reference to the subject property;

3. Include the name of the Planning Department staff person to contact and the telephone number where additional information may be obtained;

4. State that a copy of the application, all documents and evidence relied upon by the applicant, and applicable criteria are available for inspection at no cost, and will be provided at reasonable cost;

5. State that any person who is adversely affected or aggrieved or who is entitled to written notice under this Section may appeal the decision by

filing a written appeal in the manner and within the time period provided for by this code;

6. State that the decision will not become final until the period for filing a local appeal has expired; and

7. State that a person who is mailed a written notice of the tentative decision cannot appeal the decision directly to the Land Use Board of Appeals under ORS 197.830.

32.050 - COST OF NOTICE

The cost of notice required by this code shall be included in the application fee.

32.060 - RECEIPT OF NOTICE

Failure of any party to receive notice shall not automatically nullify a land use decision.

32.070 - NOTICE SCHEDULE

Type of Application	***Requirement***
Type I Permit	Mailed
Type II Permit without Hearing	
Variance, Land Partition, etc.	Mailed
Quasi-judicial Hearing Decision	
Conditional Use Permit	Published, Mailed & Posted
Subdivision, PUD, DRO, etc.	
Change of Zone Designation or Comprehensive Plan Designation	
Legislative Amendments	
Comprehensive Plan, Plan Map,	Published & Posted;
Land Development Code & Zoning Map	Mailed Notice if Required by ORS 215.503

ARTICLE 33
APPEAL OF DECISIONS

33.010 – PURPOSE

The purpose of this article is to establish uniform procedures for the appeal of decisions rendered pursuant to this code. *(ORS 215.422)*

33.020 - APPEAL AUTHORITY

A. Decisions reached under the following review procedures may be appealed to the Board of County Commissioners:

   1. Administrative Review - Article 22

   2. Hearings Officer - Article 24

   3. Planning Commission - Article 26

33.030 - NOTICE OF APPEAL

Notice of intent to appeal a decision rendered under the procedures of this code shall be filed no later than seven days following mailing of the final order. Notice shall be in the form of a signed letter, shall state the name(s) of the party or parties appealing the decision, and shall be received by Planning Department before the close of business on the seventh day or next business day if the seventh day falls on a weekend or county holiday. The fee established by the Board of County Commissioners shall accompany the notice of appeal.

33.040 - STATEMENT OF APPEAL

No later than 7 days following the filing of a notice of appeal pursuant to Section 33.030, the appellant shall file with the Planning Department a written statement of grounds for the appeal explaining:

A. How the Comprehensive Plan, Klamath County Land Development Code, or applicable State law was incorrectly interpreted or applied in the decision; or

B. What information in the record of decision was pertinent to the decision, but was not considered by the Review Body.

33.050 - EFFECT OF APPEAL

A. Failure to file an appeal within the specified time or in the manner prescribed in Sections 33.030 and 33.040 shall nullify the appeal and the decision shall be final.

B. The proper filing of an appeal shall stay the effective date of the decision until a final decision is rendered through the local appeal process.

33.060 - STANDING TO APPEAL

To have standing to appeal a decision rendered under the procedures of this code, persons or parties must have participated, either orally or in writing, in the local review process, and must show that their interests would be adversely affected by the decision.

33.070 - ACTION OF THE BOARD OF COUNTY COMMISSIONERS

A. Appeal hearings shall be conducted in accordance with Article 31.

B. If the Board of County Commissioners elects to overturn or modify the previous decision it shall make a finding declaring one or more of the following conditions exist:

1. The Planning Director, Hearings Officer or Planning Commission did not correctly interpret the requirements of the Land Development Code, Comprehensive Plan, or applicable State law; or

2. The Planning Director, Hearings Officer or Planning Commission did not consider all of the information in the record that was pertinent to the case.

C. The Board of County Commissioners may impose any necessary conditions if overturning or modifying the previous decision results in approval of an application.

D. If time permits pursuant to ORS 215.427, the Board of County Commissioners may remand an appeal to staff or the appropriate Review Body for recommendations.

F. The Board of County Commissioners may adopt by reference the findings and conclusions previously made, or make additional findings, and may amend or add to any conditions imposed.

G. The Board of County Commissioners action on an appeal shall be governed by the same regulations of this code that applied to the original Review Body.

H. Notice of an appeal hearing shall be given in the same manner as the prior review proceeding unless there was no prior evidentiary hearing. When the appeal hearing is the first evidentiary hearing on the matter, notice shall be provided in accordance with Section 32.030.

I. In the case of a tie vote of the Board of County Commissioners, the decision of the original Review Body shall be final.

33.080 - DE NOVO APPEAL HEARINGS

A. In any appeal to the Board of County Commissioners of a decision for which a first evidentiary hearing was not conducted but for which public notice was required by Oregon law, the Board's review shall be de novo or "completely new from the start."

B. Notice of a *de novo* appeal hearing shall be in accordance with the requirements of Article 32. All other appeal hearings shall be limited to the record.

CHAPTER 40
APPLICATION PROCEDURES

ARTICLE 40
BASIC PROVISIONS

40.010 - PURPOSE

The purpose of this chapter is to provide standards and criteria for development permit and change of land use applications.

40.020 - TYPES OF APPLICATIONS

The types of development permit and change of land use procedures provided by this code are as follows:

A. Site Plan Review

B. Temporary Use Permit

C. Variances

D. Conditional Use Permit

E. Land Partition

F. Subdivision of Land

G. Change of Zone Designation (Quasi-judicial)

H. Change of Comprehensive Plan/Zone Designation (Quasi-judicial)

I. Legislative Amendment to the Klamath County Comprehensive Plan, Land Development Code or Zoning Map

ARTICLE 41
SITE PLAN REVIEW

41.010 - PURPOSE

The purpose of Site Plan Review is to ensure compliance with the provisions this code for uses and activities governed by this code.

41.020 - APPLICATION

Unless otherwise specified by this code, review of a site plan is required for:

A. Issuance of a building permit for new construction exclusive of interior remodeling;

B. Land use decisions involved in making a determination of land use compatibility for any state or federal agency;

C. The construction, relocation, addition, extension, occupancy or use change of structure;

D. Any development, or change of land use; or

E. Time extension requests.

41.030 - REVIEW PROCEDURE

A. Site Plan Review for all actions involving the application of clear and objective standards or review criteria shall be conducted according to the Type I Administrative Review Procedure.

B. Site Plan Review for all land use decisions involving interpretation or the exercise of factual, policy or legal judgment shall be conducted according to the Type II Administrative Review Procedure.

41.040 - REVIEW CRITERIA

A. A site plan may only be approved if it meets all applicable review standards and criteria of this code.

B. A site plan shall be reviewed against all applicable requirements of this code.

41.050 - PROCESSING

A. Initiation - An application for Site Plan Review shall be initiated by the owner, or agent of the owner, of the property for which review is sought. An agent's application shall be authorized in writing by the owner.

B. Filing - An application for Site Plan Review shall be filed on forms provided by the Planning Department, and shall set forth in detail all necessary information. If the development does not have direct permitted access for the intended use to an established public right-of-way, the applicant shall provide documentation demonstrating proof of legal access. The documentation must be complete, legible, presented in a graphic form and orderly manner, and include source documents such as deeds or grants of easements, neither a preliminary title report nor a title policy shall be considered proof of legal access.

C. Filing Fee - An application for Site Plan Review shall be accompanied by a filing fee set by the Board of County Commissioners to defray costs incidental to the review process.

D. Incomplete Applications - Applications which are found to be incomplete or inaccurate by the Planning Director or his/her designee shall be returned to the applicant within 5 days of submittal along with a statement of specific deficiencies to be corrected. The applicant shall have 30 days from the postmark date of the notice in which to submit an amended application. If the applicant fails to complete or correct the application within the time provided, the application shall be deemed complete and transmitted to the appropriate review body with a recommendation for denial.

41.060 - SITE PLAN REQUIREMENTS

Site plans shall include the following information:

A. Tax lot number and street address;

B. Dimensions of property, scale, and north arrow;

C. Location, name, width and surface type of adjacent streets;

D. Location, dimensions and surface type of existing or proposed driveways or parking areas;

E. Location, dimensions (including height), and use or occupancy of all existing and proposed structures on the property, including accessory structures, decks, balconies, and other structural elements;

F. Distance from property lines to existing and proposed structures, septic tanks, drain lines, and wells;

G. Location of water and drainage features and the flow direction of any ponds, channels, creeks, swales or other drainage facilities effecting the proposed use;

H. Location, type, and dimensions of proposed on-site sewage disposal and water supply, if any;

I. Location and descriptions of any topographic or developed features on the site, such as rock outcrops, excavations, etc.;

J. Location and dimensions of all easements;

K. Landscaping as required by Article 65;

L. Signs as required by Article 66;

M. Parking as required in Article 68;

N. Vehicular, pedestrian, and bicycle access and circulation as required by Article 71;

O. Other appropriate information that otherwise may be required by this code, including a Traffic Impact Study pursuant to Section 71.200;

P. Signature of applicant.

41.070 - PERFORMANCE AGREEMENT

The review body may require a performance agreement pursuant to Article 15 in order to ensure compliance with any requirements of this code or conditions of the review body.

41.080 - TIME LIMIT ON SITE PLAN REVIEW

An approved site plan shall be void after 180 days if no building permit has been issued.

ARTICLE 42
TEMPORARY USE PERMIT

42.010 - PURPOSE

The purpose of the Temporary Use Permit is to provide for the establishment of uses on a short-term basis.

42.020 - REVIEW PROCEDURE

An application for a Temporary Use Permit shall be subject to the Type II Administrative Review Procedure.

42.030 - PERMITTED TEMPORARY USES

A. One manufactured dwelling in conjunction with an existing dwelling for the term of a medical hardship suffered by the resident or an immediate relative requiring care.

B. One recreational vehicle in conjunction with an existing dwelling for the term of a medical hardship suffered by the resident or an immediate relative requiring care.

C. A manufactured dwelling or recreational vehicle occupied during construction or development of a site.

D. A temporary construction office.

E. Temporary or seasonal labor camps.

F. Temporary or seasonal fairs or Outdoor Mass Gatherings.

G. Other uses as determined by the Planning Director in accordance with the Type II Administrative Review Procedure.

H. Seasonal or Transient Businesses.

42.040 - PROCESSING

A. Initiation - An application for Site Plan Review shall be initiated by the owner, or agent of the owner, of the property for which review is sought. An agent's application shall be authorized in writing by the owner.

B. Filing - An application for Site Plan Review shall be filed on forms provided by the Planning Department, and shall set forth in detail all necessary information, and shall be accompanied by a site plan drawn to the requirements of Section 41.060. If the development does not have direct permitted access for the intended use to an established public right-of-way, the applicant shall provide documentation demonstrating proof of legal access. The documentation must be complete, legible, presented in a graphic form and orderly manner, and include source documents such as deeds or grants of easements, neither a preliminary title report nor a title policy shall be considered proof of legal access.

C. Filing Fee - An application for a Temporary Use Permit or Annual Review shall be accompanied by an application fee.

D. Incomplete Applications - Applications which are found to be incomplete or inaccurate by the Planning Director or his/her designee shall be returned to the applicant within 5 days of submittal along with a statement of specific deficiencies to be corrected. The applicant shall have 30 days from the postmark date of the notice to which to submit an amended application. If the applicant fails to complete or correct the application within the time provided, the application shall be deemed complete and transmitted to the appropriate review body with a recommendation for denial.

E. Within 5 days of receiving an application, the Planning Director or his/her designee shall check the National Wetlands Inventory maps, located in the Planning Department, to determine if the site proposed for development may have a wetland located on it. If it is determined that a wetland may be located on a site proposed for development, the Planning Director or his/her designee shall notify the Division of State Lands on a form provided. A copy of the letter shall be sent to the applicant. A final decision on the application cannot be rendered until the 30 day comment period, which begins on the day the notification letter is sent, has expired.

F. Time Limitation - No request for a Temporary Use Permit shall be considered by a review body within a one-year period immediately following a previous denial of such request.

42.050 - REVIEW CRITERIA AND STANDARDS

A. A Temporary Use Permit may only be approved if it meets all applicable criteria and standards of this code.

B. A Temporary Use, its location, size design and operating characteristics will not have a significant adverse impact on the livability, value or appropriate development of abutting properties and the surrounding area.

C. Hardship dwellings shall meet the following criteria:

1. The medical hardship is certified by a licensed physician;

2. The manufactured dwelling or recreational vehicle is connected to the existing sewage disposal system except when the County Environmental Health Division determines that an existing system is inadequate and cannot be made adequate;

3. The manufactured dwelling or recreational vehicle is located as close as practical to the existing primary residence; and

4. The manufactured dwelling or recreational vehicle shall be removed from the property when the hardship condition ceases.

D. Manufactured dwellings or recreational vehicles used temporarily during development of a site or as a temporary construction office may only be approved if a building permit for the primary development has been issued. The review body shall determine if the temporary residence or office is required for development of the primary use.

E. The review body may grant a Temporary Use Permit subject to such reasonable conditions based on finding of fact that it deems necessary to ensure compliance with the Klamath County Comprehensive Plan, Land Development Code, and sound land use planning principles.

42.055 – OUTDOOR MASS GATHERING REVIEW CRITERIA & STANDARDS

A. Organizers will be required to apply for a temporary use permit if the event falls within the definition of an Outdoor Mass Gathering at least 35 days in advance. Applications are subject to Type II Administrative Review and must include the following to 1-ensure the health, safety and welfare of those attending the event, 2-protect the owners of neighboring properties, and 3-protect the legal interests and rights of the organizer(s) themselves:

1. Name, address and telephone number(s) of applicant(s).

2. Legal description of the place of the proposed event.

3. Date of the proposed event.

4. Estimated attendance at the proposed event.

5. Nature/purpose of the proposed event.

6. Site plan showing all applicable attributes as required by the Klamath County Planning Department.

7. The organizer(s) shall address food-handling requirements, water, waste disposal, portable sanitation and other applicable health standards to be approved by the Klamath County Department of Environmental Health as shown by the sign-off on the Land Use Compatibility Statement (LUCS) issued by the Klamath County Planning Department.

8. An off street parking plan that includes one parking space per four people expected to attend the event. In addition, spaces shall be provided for vehicles associated with the event (e.g. busses, trucks, limousines and staff vehicles).

9. A plan for safe and adequate access to the event site to be approved by the Klamath County Department of Public Works as shown by the sign off on the Land Use Compatibility Statement (LUCS) issued by the Klamath County Planning Department.

10. Fire protection and prevention shall be provided by a public entity or on-site fire protection equipment will be available that has been approved by the appropriate fire district. The organizer(s) shall submit a signed statement from the appropriate agency.

11. Emergency medical facilities and communication systems will be available and an ambulance shall be required on site. The organizer(s) shall submit a signed statement from the appropriate agency.

12. Security personnel and/or measures will be available and the Klamath County Sheriff shall be notified of the event.

13. Organizer(s) shall sign a statement holding themselves responsible for any incidents of trespass or vandalism on adjacent or nearby property.

14. Organizer(s) shall sign an statement explaining that after the event, the site will be restored to its original condition in a timely manner (72 hours for debris, residue and trash removal; and 3 weeks for temporary structure removal).

15. A signed statement from the organizer(s) that the event is compatible with existing land uses and will not materially alter the stability of the overall land use pattern of the area.

16. Application fee.

42.060 - ANNUAL REVIEW

A. Temporary Use Permits shall be subject to annual review in accordance with the Type II Administrative Review Procedure.

B. The Planning Director or appropriate review body shall review the temporary use against any original conditions of approval to determine continued compliance with this code or conditions of approval.

C. The review body may revoke a Temporary Use Permit upon a finding that the temporary nature of the use has expired or that the applicant has not complied with this code or conditions of approval.

42.070 - PERFORMANCE AGREEMENT

The review body may require a performance agreement pursuant to Article 15 in order to ensure compliance with any requirements of this code or conditions of the review body.

ARTICLE 43
VARIANCES

43.010 - PURPOSE

The purpose of a Variance is to permit justifiable departures from the requirements of this code where, because of the particular physical surroundings, shape, topography, or other conditions not created by the owner of the property, the literal application would result in an undue or unnecessary hardship on the owner. It is not the purpose of a Variance to authorize a use or activity not permitted by the land use zone regulations governing the property.

43.020 - REVIEW PROCEDURE

Applications for a Variance shall be reviewed according to the Type II Administrative Review Procedure (Article 22), except as follows:

A. An application for a Variance may be referred at the discretion of the Planning Director to the Hearings Officer for review under the Hearings Officer Review Procedure (Article 24).

B. An application for a Variance when in conjunction with a conditional use permit shall be reviewed according to the appropriate review procedure identified in Article 44.

C. An application for a Variance when in conjunction with a land partition or subdivision or Planned Unit Development shall be reviewed according to the appropriate review procedure for the land division or development request.

43.030 - REVIEW CRITERIA

A. A Variance may only be approved if it meets all applicable review criteria.

B. A Variance shall be reviewed against the following criteria:

1. The literal enforcement of this code would result in practical difficulty or unnecessary hardship to the owner. The difficulty or hardship may arise from the property's size, shape or topography, or from the location of lawfully existing buildings or improvements;

2. The condition causing the difficulty was not created by the applicant;

3. The granting of the Variance will not be detrimental to the use and enjoyment of adjacent properties, and will not authorize uses or activities not permitted by the land use zone regulations governing the property; and

4. The granting of the Variance will not be contrary to the intent of this code.

C. Conditions - The reviewing authority may grant a Variance subject to such reasonable conditions based on findings of fact as will ensure that:

1. Any departure from the requirements of this code will not constitute a grant of special privileges inconsistent with the limitations upon other properties in the vicinity or the land use zone in which the property is located; and

2. Conditions are necessary, in the judgment of the review authority, to protect the best interests of surrounding property or neighborhood.

43.040 - PROCESSING

Applications for a Variance shall be processed as follows:

A. Initiation - An application for a Variance shall be initiated by the owner or agent of the owner of the property proposed as the site of the Variance. An agent's application shall be authorized in writing by the owner.

B. Filing - An application for a Variance shall be filed on forms provided by the Planning Department, shall set forth in detail all necessary information, and shall be accompanied by a site plan drawn to the requirements of Section 41.060.

C. Pre-application conference - An application for a Variance shall be subject to the pre-application procedures (Article 21).

D. Filing Fee - An application for a Variance shall be accompanied by a filing fee set by the Board of County Commissioners to defray costs incidental to the review process.

E. Incomplete Applications - Applications which are found to be incomplete or inaccurate by the Planning Director or his/her designee shall be returned to the applicant within 5 days of submittal along with a statement of specific deficiencies to be corrected. The applicant shall have 30 days from the postmark date of the notice in which to submit an amended application. If the

applicant fails to complete or correct the application within the time provided, the application shall be deemed complete and transmitted to the appropriate review body with a recommendation for denial.

F. Within 5 days of receiving an application, the Planning Director or his/her designee shall check the National Wetlands Inventory maps, located in the Planning Department, to determine if the site proposed for development may have a wetland located on it. If it is determined that a wetland may be located on a site proposed for development, the Planning Director or his/her designee shall notify the Division of State Lands on a form provided. A copy of the letter shall be sent to the applicant. A final decision on the application cannot be rendered until the 30-day comment period, which begins on the day the notification letter is sent, has expired.

G. Time Limitation - No request for a Variance shall be considered by a review body within a one-year period immediately following a previous denial of such request.

H. Expiration - Variance approvals will expire in two years from the date of approval and are not subject to extension.

43.050 - PERFORMANCE AGREEMENT

The review body may require a performance agreement pursuant to Article 15 in order to ensure compliance with any requirements of this code or conditions of the review body.

43.060 – EXCEPTIONS FOR ACCESSORY BUILDINGS

A. A variance may be granted to allow an accessory building in the absence of a primary building/use on a lot or parcel outside the Urban Growth Boundary. A permit must have been denied that would prevent the establishment of a primary building/use on that lot or parcel. An applicant applying for this variance shall submit a letter from the department that denied the permit specifying the conditions resulting in the permit's denial. This letter is required as part of this variance application. An accessory building allowed by this variance shall meet the following criteria:

   1. The structure shall not exceed 700 square feet of floor space or one story in height;

   2. The structure shall have no windows of any kind;

   3. The structure may have manually operable garage doors and must have at least one man door; and

4. Plumbing, stack vents or anything that would require an electric, plumbing or mechanical permit shall not be allowed.

B. Only one accessory building allowed by this variance shall be permitted per lot or parcel; the structure shall meet setback requirements described in Article 62; & nothing shall be stored outside the structure.

C. The following shall not be stored in an accessory building allowed by this section:

   1) Recreational vehicles (RV),
   2) Any type of manufactured dwelling,
   3) Animals, and
   4) Motor vehicles in a wrecked, dismantled and/or disassembled condition.

D. With regards to access to the accessory building, a driveway permit must be obtained from the Department of Public Works.

E. A variance under this section shall be reviewed and processed pursuant to Section 43.020 and 43.040 respectively.

ARTICLE 44
CONDITIONAL USE PERMIT

44.010 - PURPOSE

The purpose of the Conditional Use Permit is to provide a mechanism whereby uses which may be suitable only in certain locations or only if designed or operated in a particular manner may be allowed within the basic zone designation.

44.020 - REVIEW PROCEDURE

Applications for a Conditional Use Permit shall be reviewed as follows:

A. Hearings Officer Review Procedure (Article 24)

1. Conditional Use Permit applications for any use located outside the Urban Growth Boundary except for those in con-junction with a subdivision or planned unit development or any application for mining and/or mineral processing; or

2. Extensive Impact Services and Utilities involving land within the Urban Growth Boundary.

3. In the absence of a Hearings Officer, the Planning Director shall provide for a Type II Review, as prescribed per Article 22.
   {Art. 45.020(A)(3) added – no text deleted}

B. Type II Administrative Review Procedure (Article 22)

   Conditional Use Permit applications for all uses within the Urban Growth Boundary except for Extensive Impact Services and Utilities involving land located within an Urban Growth Boundary and those in conjunction with a subdivision or planned unit development.

C. Planning Commission Review Procedure (Article 26)

   An application for a Conditional Use Permit in conjunction with a subdivision or planned unit development inside or outside the Urban Growth Boundary.

44.030 - REVIEW CRITERIA

A. The use complies with policies of the Comprehensive Plan;

B. The use is in conformance with all other required standards and criteria of this code; and

C. The location, size, design, and operating characteristics of the proposed use will not have a significant adverse impact on the livability, value or appropriate development of abutting properties and the surrounding area. This includes impacts on the transportation system to be determined pursuant to Section 71.200.

D. Conditions - The review body may grant a Conditional Use Permit subject to such reasonable conditions, pursuant to Section 20.040, based on findings of fact that it deems necessary to ensure compliance with the Klamath County Comprehensive Plan, Land Development code, Urban Area Transportation System Plan, and sound land use planning principles.

44.040 - PROCESSING

Applications for a Conditional Use Permit shall be processed as follows:

A. Initiation - An application for a Conditional Use Permit shall be initiated by the owner, or agent of the owner of the property proposed as the site of the conditional use. An agent's application shall be authorized in writing by the owner.

B. Filing - An application for a Conditional Use Permit shall be filed on forms provided by the Planning Department, shall set forth in detail all necessary information, and shall be accompanied by a site plan drawn to the requirements of Section 41.060 and any other requirements of this code. If the development does not have direct permitted access for the intended use to an established public right-of-way, the applicant shall provide documentation demonstrating proof of legal access. The documentation must be complete, legible, presented in a graphic form and orderly manner, and include source documents such as deeds or grants of easements, neither a preliminary title report nor a title policy shall be considered proof of legal access.

C. Pre-application Conference - An application for a Conditional Use Permit shall be subject to the pre-application procedure (Article 21).

D. Filing Fee - An application for a Conditional Use Permit shall be accompanied by a filing fee set by the Board of County Commissioners to defray the cost incidental to the review process.

E. Incomplete Applications - Applications which are found to be incomplete or inaccurate by the Planning Director or his/her designee shall be returned to the applicant within 5 days of submittal along with a statement of specific deficiencies to be corrected. The applicant shall have 30 days from the postmark date of the notice in which to submit an amended application. If the applicant fails to complete or correct the application within the time provided, the application shall be deemed complete and transmitted to the appropriate review body with a recommendation for denial.

F. Within 5 business days of receiving an application, the Planning Director or his/her designee shall check the National Wetlands Inventory maps, located in the Planning Department, to determine if the site proposed for development may have a wetland located on it. If it is determined that a wetland may be located on a site proposed for development, the Planning Director or his/her designee shall notify the Division of State Lands on a form provided. A copy of the letter shall be sent to the applicant. A final decision on the application cannot be rendered until the 30-day comment period, which begins on the day the notification letter is sent, has expired.

G. Time Limitation - No request for a Conditional Use permit shall be considered by a review body within a one-year period immediately following a previous denial of such request.

44.050 - TIME LIMIT ON CONDITIONAL USE PERMIT APPROVAL

A. A Conditional Use Permit shall be void after 2 years if a development permit has not been issued or has expired, except as noted in part E of this section.

B. A Conditional Use Permit is considered void if the use is discontinued for a period of 1 year.

C. Requests for an extension of time for an approved and final Conditional Use Permit shall be reviewed in accordance with the Type I Administrative Review Procedure.

D. Requests for an extension of time based on substantial development of an approved and final Conditional Use Permit shall be reviewed against the following criteria:

1. The nature of the project and original conditions;

2. The acts of the property owner must arise beyond mere contemplated use.

3. Development is unable to occur due to circumstances beyond the control of the owner.

4. A Conditional Use Permit will be limited to three (3) one-year time extensions.

E. For non-farm dwellings pursuant to sections 54.070 & 54.080 and forest dwellings pursuant to 55.070, 55.080 & 55.090 the following (1-2) apply:

1. A Conditional Use Permit shall be void after 4 years if a development permit has not been issued or has expired.

2. Only one time extension shall be allowed. This time extension is valid for 2 years.

44.060 - PERFORMANCE AGREEMENT

The review body may require a performance agreement pursuant to Article 15 in order to ensure compliance with any requirements of this code or conditions of the review body.

ARTICLE 45
LAND PARTITION

45.010 - PURPOSE

The purpose of the land partitioning procedure is to ensure that the division of lands into parcels for subsequent use and development is conducted in an orderly manner and in compliance with this code and Oregon law.

45.020 - REVIEW PROCEDURE

A. A land partition request and tentative partition plan shall be reviewed according to the Type II Administrative Review Procedure (Article 22).

B. A land partition request and tentative partition plan associated with a conditional use permit for a dwelling not necessary and accessory to farm use shall be reviewed according to the Hearings Officer Review Procedure (Article 24).

45.030 - PARTITION RESTRICTIONS

No partition shall be approved within a subdivision, planned unit development, or previously approved partition unless the standards of Article 71 are met. The review body may waive requirements of Article 71 upon a finding that adequate access exists and relevant road standards are met.

45.040 - REVIEW CRITERIA

A. A partition request may only be approved if it meets all applicable standards and review criteria.

B. A partition request shall be reviewed against the following criteria:

1. The proposed partition complies with policies of the Comprehensive Plan;

2. The proposed partition is in conformance with all standards and criteria of this code and applicable state statutes;

3. The subject property is physically suitable for the type and proposed density of development and conforms to zone standards;

4. The parcels are located and laid out to properly relate to adjoining or nearby lot or parcel lines, utilities, street, or other existing or planned facilities;

5. The sewer and water facilities and existing fire protection services are adequate to serve the density of development resulting from the proposed partition;

6. The proposed partition has legal access to the property;

7. The proposed partition will not conflict with legally established easements or access within or adjacent to the parcel configuration resulting from subject property; and

8. The proposed partition will not prohibit the extension of dedicated streets or roads.

45.050 - PROCESSING

Applications for a partition shall be processed as follows:

A. Initiation - An application for a partition shall be initiated by the owner, or agent of the owner, of the property proposed as the site of the partition. An agent's application shall be authorized in writing by the owner.

B. Filing - An application for a partition shall be filed on forms provided by the Planning Department, shall set forth in detail all necessary information, and shall be accompanied by a tentative partition plan drawn to the requirements of Section 45.060. If the development does not have direct permitted access for the intended use to an established public right-of-way, the applicant shall provide documentation demonstrating proof of legal access. The documentation must be complete, legible, presented in a graphic form and orderly manner, and include source documents such as deeds or grants of easements, neither a preliminary title report nor a title policy shall be considered proof of legal access.

C. Filing Fee - An application for a partition shall be accompanied by a filing fee set by the Board of County Commissioners to defray costs incidental to the review process.

D. Incomplete Applications - Applications which are found to be incomplete or inaccurate by the Planning Director or his/her designee shall be returned to the applicant within 5 days of submittal along with a statement of specific deficiencies to be corrected. The applicant shall have 30 days from the postmark date of the notice in which to submit an amended application. If the

applicant fails to complete or correct the application within the time provided, the application shall be deemed complete and transmitted to the appropriate review body with a recommendation for denial.

E. Within 5 days of receiving an application, the Planning Director or his/her designee shall check the National Wetlands Inventory maps, located in the Planning Department, to determine if the site proposed for development may have a wetland located on it. If it is determined that a wetland may be located on a site proposed for development, the Planning Director or his/her designee shall notify the Division of State Lands on a form provided. A copy of the letter shall be sent to the applicant. A final decision on the application cannot be rendered until the 30-day comment period, which begins on the day the notification letter is sent, has expired.

F. Time Limitation - No request for a partition shall be considered by a review body within a one-year period immediately following a previous denial of such request.

45.060 - TENTATIVE PARTITION PLAN REQUIREMENTS

A. Preparation and Submission - The applicant shall cause a tentative partition plan to be prepared, together with additional information that may be required by this code to indicate the objectives of the development.

B. Copies - The applicant shall submit to the Planning Department the original drawing or acceptable tracing, and 15 copies of the tentative partition plan.

C. Drawing Requirements - Tentative partition plans shall be drawn on 18 inch by 24 inch tracing medium suitable for diazo copying purposes. Tentative partition plans shall be drawn to an appropriate engineer's scale.

D. Required Information - The tentative partition plan shall show the following information:

1. Partition number assigned by the Planning Department;

2. North arrow, scale, and date of preparation;

3. A vicinity map showing the general location of the property;

4. All exterior lot lines and approximate dimensions of the property being partitioned;

5. All proposed lot lines and approximate dimensions;

6. Jurisdictional or political boundaries;

7. The property location (township, range, section and subdivision - where applicable);

8. Approximate acreage of each parcel;

9. The existing and proposed use of the land;

10. Boundary lines of adjacent properties and the names of owners of record;

11. Approximate direction of slope and approximate percentage of slope for all parcels under 10 acres in size to be created;

12. Major natural physical features such as steep slopes, bluffs, rock outcroppings, canyons, all drainage;

13. All bodies of water such as rivers, streams, lakes, irrigation facilities;

14. The location and outline of existing buildings or other improvements on the property, and the address, if available;

15. The location, width and names of all existing and proposed streets or roads on or adjacent to the property;

16. The location and width of all existing and proposed easements on the property;

17. The location of all existing water wells, and the approximate location of any existing septic tanks and leach field on each parcel;

18. All existing and proposed utilities and the method of serving each parcel, including the source of domestic water and the method of sewage disposal;

19. Existing and proposed means of vehicular access to each parcels;

20. Approximate street grades and direction of surface water drainage flow on existing or proposed streets or roads;

21. The Comprehensive Plan and zoning designation(s) applicable to the property;

22. The name(s), address(es) and telephone number(s) of owners, contract purchasers, or representative of the property; and

23. The name, address, and telephone number(s) of the person preparing the tentative partition plan.

24. For a land partition of rural residential lands, a fifty (50)-foot structural setback shall be indicated from those residential property lines that are contiguous to resource lands.

E. Property Owners List - Names and addresses of all property owners as shown on the last preceding tax roll of the Klamath County Assessor shall be submitted in the following manner:

1. For land partitions involving land planned and zoned for agriculture or forestry, the property owners list shall encompass all property within 500 feet of the subject property;

2. For land partitions partially or wholly outside of an urban growth boundary but not involving land planned and zoned for agriculture or forestry, the property owners list shall encompass all property within 300 feet of the subject property; or

3. For land partition inside of an urban growth boundary, the property owners list shall encompass all property within 200 feet of the subject property.

45.070 - TENTATIVE PARTITION PLAN REVIEW

A. Referral of the Tentative Partition Plan for Comment - No later than 15 days prior to the scheduled review date, the Planning Director shall furnish 1 copy of the tentative partition plan and supplemental materials to parties interested in or potentially affected by the proposed partition for their review and comment.

B. Property Inspection - All proposed partitions may be inspected by the Planning Director, County Surveyor, Public Works Director, Environmental Health Director, or their authorized representatives prior to the scheduled review date. Unusual conditions that would adversely affect the subject property or adjacent property shall be noted, and appropriate recommendations developed for consideration by the review body.

C. Survey of Parcels - The County Surveyor, upon review of the tentative partition plan, may recommend a survey of the property. Any parcel created by partition that is 10 acres or less in size shall be surveyed in accordance with applicable state statutes.

D. Review - The appropriate review body shall review the tentative partition plan and all supplemental materials required by this code, and render a decision pursuant to procedures of Chapter 20.

E. Conditions - The review body may grant approval of a partition plan subject to such reasonable conditions based on findings of fact that it deems necessary to ensure compliance with the Klamath County Comprehensive Plan or Land Development Code.

F. Submission of Final Plat - An applicant for a land partition shall cause a final plat to be prepared and recorded with the County Clerk within 1 year of the final decision on the tentative partition plan. The applicant shall submit a final plat and all supplementary materials to the Planning Director not less than 30 days prior to the deadline, and shall secure all necessary approvals and signatures within 30 days of submitting the final plat to the County. The final plat shall conform to the approved tentative partition plan, Section 45.100 and applicable state statutes.

G. If the time period for recording the final plat expires without the approved time extension, the applicant shall file a new partition application.

45.080 - IMPROVEMENTS

A. The Director of Public Works may specify, or the review body require, improvements and/or repairs to roads or infrastructure to be installed or completed by the applicant.

B. The applicant shall complete all required improvements or repairs prior to filing the final plat with the County, or shall execute a performance agreement with the County pursuant to Article 15.

C. All required road improvements or repair of existing roads and public facilities shall be made in accordance with the requirements of the Director of Public Works.

D. An improvement inspection fee shall accompany the submission of the final plat for those developments requiring improvements or repairs.

45.090 - TIME EXTENSION

Prior to the expiration date of approval of the tentative partition plan, an applicant may apply for a time extension.

A. Requests for time extension shall be filed on forms provided by the Planning Department, and accompanied by the established fee.

B. Review of requests for time extension shall be reviewed according to the Planning Director Review Procedure.

C. Review Criteria - In order to approve a request for time extension, the Planning Director must find that:

   1. The facts upon which the approval of the tentative partition plan was based have not changed to an extent sufficient to warrant re-submittal of the tentative partition plan;

   2. No other development approvals would be adversely affected by the time extension; and

   3. The applicant is unable to file the final partition plat due to circumstances beyond his or her control.

D. A maximum of 3 time extensions may be granted following the date of approval of the tentative partition plan. The cumulative length of time extensions shall not exceed 3 years.

E. If a request for time extension is denied and the time period for recording the final plat expires, a new partition application must be filed.

45.100 - FINAL PLAT REQUIREMENTS

A. Original Drawing - The original drawing of a partition plat shall be made in archive quality black ink on minimum 4 mil mylar, 18 inches by 24 inches in size with an additional 3 inch binding edge on the left side. The plat shall be of such a scale as required by the County Surveyor. The lettering of the approvals, the surveyors certificate and signature, and all other information shall be of such a size or type as will be clearly legible, but no part shall come nearer any edge of the sheet than 1 inch. The original drawing shall be recorded in the County Clerk's office.

B. Copy - One exact archival quality copy of the original plat on minimum 4 mil mylar, 18 inches by 24 inches in size shall be submitted to the Planning Director along with the original plat.

C. Information Shown on the Final Plat

   1. The partition number;

2. The name of the person for whom the partition was made;

3. Signature Blocks for the following:

   a. Planning Director;

   b. County Surveyor;

   c. Director of Public Works (if required under Section 45.110(C));

   d. County Clerk;

   e. Tax Collector;

   f. A signed, notarized declaration and surveyor's certificate that meets the requirements of Oregon Revised Statutes Chapter 92.

4. All requirements of ORS Chapter 92, and ORS Chapter 209 where applicable; and

5. Street names adjacent to the partition.

6. For a land partition of rural residential lands, a fifty (50)-foot structural setback shall be indicated from those residential property lines that are contiguous to resource lands.

D. Supplemental Information to be filed with the Final Plat

1. A preliminary title report or partition guarantee issued by a title company in the name of the owner of the land and prepared within 30 days prior to submittal of the final plat showing all parties having any record title interest in the premises and what interest they have.

2. For any lot or parcel created by a partition that is 10 acres or less in size, the applicant shall secure certification in the form of a completed and approved Site Evaluation Report for location and methods of On-Site Sewage Treatment and Disposal Systems from the Klamath County Health Department and/or the Oregon Department of Environmental Quality. The date of site evaluation approval shall be recorded on the Final Plat.

3. Computation sheets showing the bearings, distances and error of closure, if any, and the curve data of each surveyed parcel of the partition and the outside boundary if surveyed (ORS 92.100).

45.110 - FINAL PLAT REVIEW

A. Approval of the County Planning Director - The Planning Director shall thoroughly review the final plat and supplementary information upon its submission within the required time frame. The final plat shall be signed by

the Planning Director if it is in conformance with the tentative partition plan and the requirements of this code.

B. Approval of the County Surveyor - The County Surveyor shall thoroughly review the final plat and supplementary information to determine that the plat complies with this code and all applicable state statutes. The final plat shall be signed by the County Surveyor if it is correct and in full conformance with this code and applicable state statutes.

C. Approval by the Director of Public Works on any partition that includes the creation of an access road or easement. The Director of Public Works shall review and sign the final plat if any of the following conditions were required, and have been met:

   1. All required easements are recorded; and

   2. All required improvements or repairs have been completed, or a performance agreement executed with the Director of Public Works in accordance with Article 15.

D. Approval of Tax Collector - No subdivision or partition plat shall be recorded unless all ad valorem taxes, including additional taxes, interest and penalties imposed on land disqualified for any special assessment and all special assessments, fees, or other charges required by law to be placed upon the tax roll have been paid which have become a lien upon the land or which will become a lien during the tax year. The County Tax Collector shall determine if these taxes have been paid, and if taxes have been paid, shall sign the final plat.

E. Filing of Final Plat - After obtaining all required approvals and signatures, the applicant shall record the plat with the County Clerk and file an exact copy with the County Surveyor or County Planning Director. The exact copy shall be made in conformance with Section 45.100 and applicable state statutes.

F. Expiration - Approval of the final plat shall be null and void if the plat is not recorded within 1 year of the final decision of the tentative partition plan unless a time extension has been granted.

45.120 – CREATION OF PARCELS IN RURAL RESIDENTIAL LAND LESS THEN THE MINIMUM LOT SIZE

A. Lots zoned R-2 and R-5, described in Chapter 50, may be partitioned, resulting in parcels that are less then the minimum lot size if all of the following (1-5) exist:

1. The parcel to be divided has two or more permanent habitable dwellings on it;

2. The permanent habitable dwellings on the parcel to be divided were established before October 4, 2000;

3. Each new parcel created by the partition would have at least one of those permanent habitable dwellings on it;

4. The partition would not create any vacant parcels on which a new dwelling could be established; and

5. Each parcel must have separate septic approval.

B. For the purpose of this rule, “habitable dwelling” means a dwelling that meets the Criteria set forth in ORS 215.283 (t)(A)-(t)(D).

ARTICLE 45.5
PROPERTY LINE ADJUSTMENT

45.510 – PURPOSE

The purpose of this article is to standardize property line adjustment procedures and ensure that the requirements of this code are met. A property line shall be a division line between two abutting properties, which are in separate ownership.

45.520 – REVIEW PROCEDURE

A property line adjustment shall be processed according to a Type I administrative review procedure.

45.530 – REVIEW CRITERIA

A property line adjustment may only be approved if it meets all applicable standards and review criteria.

A. No property line adjustment will be approved unless both contiguous parcels are lawfully created and have legal access;

B. A property line adjustment shall not result in the creation of a new parcel;

C. The parcels resulting from the property line adjustment conform to zoning regulation in terms of size, shape and setback requirements;

D. Adjustments to nonconforming lots or parcels shall not result in greater nonconformity or render substantially conformed lots or parcel more nonconforming. A reduction in the size of a nonconforming lot or parcel may be approved if it contributes substantially to bringing an adjacent nonconforming parcel closer into conformance;

E. The property line adjustment will not interfere with any public or private easement; and

F. A proposed property line adjustment of lots or parcels shall only be a minor change in the existing common boundary. Proposed property line adjustments, which have the net result of physically relocating a lot or parcel to a new location, or the elimination of a lot or parcel, shall be reviewed as a land partition.

45.540 – PROCESSING

A. Initiation – An application for a property line adjustment shall be initiated by the owners, or agent of the owners, of the subject properties. An agent's application shall be authorized in writing by the owners.

B. Filing Fee – An application for a property line adjustment shall be accompanied by a filing fee set by the Board of County Commissioners to defray cost incidental to the review process.

C. Two copies of the site plan conforming to Section 41.060 and showing the proposed property line relocation and the resulting lot or parcel sizes.

45.550 – FINALIZING THE PROPERTY LINE ADJUSTMENT

Applicants are required to do the following within two (2) years of approval of the property line adjustment or the approval is null and void:

A. File with the County Surveyor a map of survey of the adjusted line prepared in accordance with ORS 209.250 if either or both parcels affected are 10 acres or less; or

B. Provide the following for Planning Department review and approval:

- A legal description of the adjustment area(s) being conveyed or received.
- Draft deeds of each of the properties as adjusted.

C. Record the following deeds with the County Clerk and provide copies to the Planning Department:

- A deed transferring the adjustment area from one property owner to the other.
- A new deed for each property which describes it as adjusted.

ARTICLE 46
LAND SUBDIVISION

46.010 - PURPOSE

The purpose of the land subdivision procedure is to ensure that the division of land into lots for subsequent use and development is conducted in an orderly manner and in compliance with this code and Oregon law.

46.020 - REVIEW PROCEDURE

A preliminary subdivision plat shall be reviewed according to the Planning Commission Review Procedure (Article 26).

46.030 - REVIEW CRITERIA

A. A subdivision plat may only be approved if it meets all applicable standards and review criteria.

B. A subdivision plat shall be reviewed against the following criteria:

1. The subdivision development complies with policies of the Comprehensive Plan, including the policies and standards of the Urban Area Transportation System Plan;

2. The subdivision plat is in conformance with all standards and criteria of this code and applicable state statutes;

3. The site of the proposed subdivision is physically suitable for the type and density of the proposed development;

4. The street plan for the proposed subdivision will permit its development in a safe and efficient manner in accordance with the Comprehensive Plan and this code and transportation improvements, consistent with the findings from a Traffic Impact Study pursuant to Section 71.200;

5. The street plan for the proposed subdivision will permit the development of adjoining land in a safe and efficient manner for vehicles, pedestrians, and bicyclists in accordance with the Comprehensive Plan and this code; and

6. The existing and proposed infrastructure and public facilities and services required by this code are adequate to serve the proposed development.

46.040 - PROCESSING

Applications for a subdivision shall be processed as follows:

A. Initiation - An application for a subdivision shall be initiated by the owner, or agent of the owner, of the property proposed as the site of the subdivision. An agent's application shall be authorized in writing by the owner.

B. Filing - An application for a subdivision shall be filed on forms provided by the Planning Department, and shall set forth in detail all necessary information, and shall be accompanied by a preliminary subdivision plat drawn to the requirements of Section 46.050 and any other requirements of this code. If the development does not have direct permitted access for the intended use to an established public right-of-way, the applicant shall provide documentation demonstrating proof of legal access. The documentation must be complete, legible, presented in a graphic form and orderly manner, and include source documents such as deeds or grants of easements, neither a preliminary title report nor a title policy shall be considered proof of legal access.

C. Filing Fee - An application for a subdivision shall be accompanied by a filing fee set by the Board of County Commissioners to defray costs incidental to the review process.

D. Incomplete Applications - Applications which are found to be incomplete or inaccurate by the Planning Director or his/her designee shall be returned to the applicant within 5 days of submittal along with a statement of specific deficiencies to be corrected. The applicant shall have 30 days from the postmark date of the notice in which to submit an amended application. If the applicant fails to complete or correct the application within the time provided, the application shall be deemed complete and transmitted to the appropriate review body with a recommendation for denial.

E. Within 5 days of receiving an application, the Planning Director or his/her designee shall check the National Wetlands Inventory maps, located in the Planning Department, to determine if the site proposed for development may have a wetland located on it. If it is determined that a wetland may be located on a site proposed for development, the Planning Director or his/her designee shall notify the Division of State Lands on a form provided. A copy of the letter shall be sent to the applicant. A final decision on the application cannot be rendered until the 30 day comment period, which begins on the day the notification letter is sent, has expired.

F. Time Limitation - No request for a subdivision shall be considered by a review body within a one-year period immediately following a previous denial of such request.

46.050 – PRELIMINARY SUBDIVISION PLAT REQUIREMENTS

A. Preparation and Submission - The subdivider shall cause to be prepared a preliminary plat, together with improvement plans and other supplementary material as may be necessary to indicate the general subdivision plan and objectives of the development.

B. Copies - 30 copies of the preliminary subdivision plat and other supplementary materials shall be submitted to the Planning Department.

C. Drawing Requirements - Preliminary subdivision plats shall be drawn to a standard engineer's scale and show the following information:

1. A tract number obtained from the County Surveyor.

    a. The County Surveyor shall maintain a permanent record of all tract numbers.

    b. When a number has been assigned by the County Surveyor for the subdivision of a particular parcel or contiguous parcels of land, the subdivider shall place the same number on the preliminary subdivision plat.

    c. In addition to the number, a name may be used. Such name shall not be the same as, similar to, or pronounced the same as the name of any other subdivision in Klamath County.

2. Date, north point, scale of drawing and a vicinity map sufficient to define the location and boundaries of the proposed subdivision;

3. Location of the subdivision by section, township and range;

4. Names, addresses and phone numbers of all owners within the subdivision, the subdivider, (if other than the owner) and the registered surveyor;

5. Appropriate identification of the map as a preliminary subdivision plat.

D. Required Information - All preliminary subdivision plats shall show the following information:

1. Existing Conditions:

a. The location, width, and names of all existing or platted streets, ways or other public ways within or adjacent to the proposed subdivision, easements, railroad rights-of-way, and other important features, including but not limited to section lines and corners, city and school district boundaries;

b. For subdivision within urban growth boundaries, contour lines shall be shown at the following minimum intervals, and shall be related to some established bench mark or other datum as approved by the Director of Public Works:

1) 2 foot contour intervals for ground slopes between 0 percent and 10 percent; or

2) 5 foot contour intervals for ground slopes exceeding 10 percent.

c. For subdivisions outside urban growth boundaries, contour lines shall be shown at intervals necessary to properly indicate the ground contour and to design the street pattern and lot layout, and shall be related to some established bench mark or other datum as approved by the Director of Public Works;

d. The location and direction of all watercourses including a delineation of the high water mark;

e. Natural features such as rock outcroppings, wetlands, wooded areas, preservable trees; and

f. Existing uses of the property, including the location of all existing structures to remain on the property after platting.

2. Proposed Development:

a. All streets showing the location, widths, names, approximate grades, and approximate radii of curves and the relationship of all streets to any projected streets. This shall include any walkways and pedestrian connections as required by Article 71, Vehicular and Non-Vehicular Access and Circulation;

b. The location and width of all existing and proposed easements, including the purpose of such easement;

c. The location and width of all existing and proposed easements, including the purpose of such easement;

d. Lot layout showing approximate dimensions, minimum lot size, and proposed lot numbers. A subdivision submitted for final approval shall not use block numbers or letters; and

e. All land proposed to be reserved by the subdivider for public purposes, showing the location, size and proposed uses.

f. For subdivision of rural residential lands, a fifty (50)-foot structural setback shall be indicated from those residential property lines that are contiguous to resource lands.

E. Accompanying Statement. A separate statement containing the following information shall accompany the preliminary subdivision plat if the following information cannot be shown practically on the preliminary subdivision plat:

1. Proposed uses of the property and present zoning;

2. Existing and/or proposed deed restrictions, if any;

3. A statement of the improvements proposed to be made or installed, the time such improvements are proposed to be made or completed, and the procedures the subdivider proposes to use;

4. A statement of what provisions are proposed for water supply, sewage disposal and drainage; and

5. Identification of the irrigation district involved and provisions for delivering irrigation water to the lots in the subdivision.

F. Drainage Plan. A drainage plan, prepared in accordance with Article 73 shall accompany all preliminary subdivision plats in the Klamath Falls Urban Area.

G. Evidence that the applicant has contacted the Environmental Health Department regarding the provision of on-site sewage disposal and other requirements, as applicable.

H. A Traffic Impact Study as may be required by Section 71.200.

46.060 - PRELIMINARY SUBDIVISION PLAT REVIEW

A. Review by the Planning Department - Prior to a preliminary plat application being accepted as complete by the Planning Department and a hearing being scheduled before the appropriate review body, the applicant shall conduct a Pre-application Conference with a representative of the Planning Department.

B. Referral of the Subdivision Plat for Comment - No later than 15 days prior to the scheduled review date, the Planning Director shall furnish 1 copy of the preliminary subdivision plat and supplemental materials to parties interested in or potentially affected by the proposed subdivision for their review and comment.

C. Property Inspection - All proposed subdivisions may be inspected by the Planning Director, County Surveyor, the Public Works Director, Environmental Health Director, or their authorized representatives prior to the scheduled review date. Unusual conditions that would adversely affect the subject property or adjacent property shall be noted for the record, and appropriate conditions, plans, specifications, and/or improvements developed for consideration of the Planning Commission.

D. Review by the Planning Commission - The Planning Commission shall review the preliminary subdivision plat and all supplemental materials of Section 46.050, and render a decision pursuant to procedures of Chapter 20.

E. Conditions - The Planning Commission may grant approval of a preliminary subdivision plat subject to such reasonable conditions based on findings of fact that it deems necessary to ensure compliance with the Klamath County Comprehensive Plan or Land Development Code.

F. Survey of Lots - Following the approval of a preliminary subdivision plat, the applicant shall cause the lots proposed for creation to be accurately surveyed and monumented in accordance with standards established in Oregon Revised Statues Chapter 92.

G. Submission of Final Plat - An applicant for a subdivision shall cause a final plat to be prepared and recorded with the County Clerk within 2 years of the final decision on the preliminary subdivision plat. The applicant shall submit a final plat and all supplementary materials to the Planning Director not less than 60 days prior to the deadline, and shall secure all necessary approvals and signatures within 60 days of submitting the final plan to the County.

H. Re-submittal - If the time period for recording the final plat expires without an approved time extension, the applicant shall submit a new subdivision application.

46.070 - IMPROVEMENTS

A. The subdivider shall install all required improvements and repair existing streets and other public facilities damaged in the development of the subdivision prior to submitting the final plat to the County; or

B. The subdivider shall execute and file with the Director of Public Works an agreement pursuant to Article 15 of this code which specifies that all required improvements shall be completed within 2 years and providing that if such work is not completed the County may complete the work and recover the full cost and expense from the subdivider.

C. The installation of all required roads and public facilities, and the repair of roads and public facilities shall be done in accordance with the requirements of the Director of Public Works and this code.

D. An improvement inspection fee shall accompany the submission of the final plat for those developments requiring improvements or repairs.

46.080 – TIME EXTENSION

Prior to the expiration date of approval of the preliminary subdivision plat, an applicant may apply for a time extension.

A. Requests for time extension shall be filed on forms provided by the Planning Department, and accompanied by the established fee.

B. Review of a request for time extension shall be reviewed according to the Planning Director Review Procedure.

C. Review Criteria - In order to approve a request for time extension, the Planning Director must find that:

   1. The facts upon which the approval of the preliminary subdivision plat was based have not been changed to an extent sufficient to warrant re-submittal of the preliminary subdivision plat;

2. No other development approvals would be adversely affected by the time extension; and

3. The subdivider is unable to file the final plat due to circumstances beyond his or her control.

D. A maximum of 3 one-year time extensions may be granted following the date of approval of the preliminary subdivision plat.

E. If a request for time extension is denied and the time period for submitting the final plat expires, a new subdivision application must be filed.

46.090 – FINAL PLAT REQUIREMENTS

A. Conformance to Preliminary Subdivision Plat - The final plat must substantially conform to the approved preliminary subdivision plat and applicable state statutes. A final plat may show a decrease in number of lots or an increase of not more than 10 percent of number of lots from that shown on the preliminary subdivision plat.

B. Drawing Requirements - The original drawing of the final plat shall be made in archive quality black ink on minimum 4 mil mylar, 18 inches by 24 inches in size with an additional 3 inch binding edge on the left side. The subdivision plat shall be of such scale as required by the County Surveyor. All information shall be of such a size or type as will be clearly legible, but no part shall come nearer any edge of the sheet than one inch. The original drawing shall be recorded in the County Clerk's office.

C. Copies - One exact archival quality copy of the original plat on minimum 4 mil mylar, 18 inches by 24 inches in size shall be submitted to the Planning Director along with the original plat. The exact copy shall be filed with the County Surveyor.

D. Information Shown on Plat - The final plat shall be made to comply with ORS Chapter 92 and include the following:

1. The new number assigned by the County Surveyor, and if applicable, the name of the subdivision, date, scale, north point, legend and controlling topography such as creeks, highways, and railroads;

2. Written legal description of the plat boundaries;

3. The location, names and widths of all streets, existing or being created. For streets on a curve, curvature data shall be based on the centerline;

4. Land parcels to be dedicated for any purpose, public or private, with all dimensions, boundaries, and courses clearly shown and defined in every case to be distinguished from lands intended for sale;

5. The following certificates, declarations or affidavits, which may be combined where appropriate, exact as to form and content to those presented in Exhibits I through XIII of this article; and

   a. A declaration signed and properly acknowledged by all parties having any record title interest in the land to be subdivided, consenting to the preparation and recordation of land shown on the final map plat in accordance with Oregon Revised Statutes Chapter 92;

   b. A certificate signed by the Registered Land Surveyor responsible for the survey and preparation of the final plat. The signature of such registered surveyor shall be accompanied by his seal;

   c. A certificate signed by the Director of Public Works certifying that the subdivider has installed improvements or executed a performance agreement in accordance with Article 15.

   d. A certificate signed by the County Assessor certifying that all ad valorem taxes and all special assessments, fees and other charges required by law to be placed on the tax roll which became a lien during the calendar year have been paid;

   e. A certificate, on the copy of the final plat, signed by the County Clerk and the Registered Surveyor certifying that the copy is a true and exact copy of the final plat; and

   f. A certification signed by the subdivider that central water supply and sanitary sewer systems will not be provided and that the Department of Environmental Quality has approved the proposed method or alternative method of sewage disposal for the subdivision in its evaluation report described in ORS 454.755(1)(b);

   g. A certification by the authorized representative of the agency or authority which will provide these services if water and sewer services are to be provided.

6. Space for signatures of the following: County Surveyor, County Tax Collector, County Planning Director, County Assessor, County Clerk, and the Board of County Commissioners.

E. Supplemental Information to be filed with Final Plat:

1. A preliminary title report or subdivision guarantee issued by a title insurance company in the name of the owner of the land showing all parties having any record title interest in the premises and what interest they have;

2. The computation sheets showing the bearings, distances, and error of closure, if any, and the curve data of each lot in the subdivision, and of the outside boundary;

3. If applicable, a good and sufficient bargain and sale deed, executed to Klamath County, free from all restrictions, outstanding liens and encumbrances, conveying property other than streets, alleys or walkways for public use;

4. A copy of any existing or proposed deed restrictions applicable to the subdivision; and

5. Plans, profiles and specifications, prepared by the engineer showing proposed construction design and standards for all improvements. One reproducible copy of plans, profiles and specifications, prepared by the project's engineer to be submitted to and retained by the Director of Public Works showing proposed construction design and standards for all improvements. After approval by the Director of Public Works, any changes in the design work shall be submitted to, and approved by, the Director of Public Works before construction begins. Approval of the completed improvements shall be made by the Director of Public Works or his authorized representative before the improvements are accepted and performance assurance released.

6. A completed and approved "Evaluation Report for Methods of On-Site Sewage Disposal for a Subdivision" described in ORS 454.755(1)(b); from the Environmental Health Department, if applicable.

7. For subdivision of rural residential lands, a fifty (50)-foot structural setback shall be indicated from those residential property lines that are contiguous to resource lands.

46.100 – FINAL PLAT REVIEW

A. Approval of the County Planning Director - The Planning Director shall thoroughly review the final plat and supplementary information upon its submission within the required time frame. The final plat shall be signed by the Planning Director if it is in conformance with the preliminary subdivision plat, requirements of this code, and any conditions of approval for the preliminary subdivision plat set by the Planning Commission.

B. Approval of the County Assessor and County Tax Collector - The County Assessor shall review the subdivision proposal and shall sign the final plat if all required assessments, fees, and charges have been made current. The Tax Collector shall sign the final plat if all required assessments, fees, and charges have been paid.

C. Approval of the County Surveyor - The County Surveyor shall thoroughly review the final plat and supplemental information to determine that the plat complies with all applicable statutes and provisions, and that the plat is technically correct and within the allowable limits of error prescribed by statues. The final plat shall be signed by the County Surveyor if the final plat is correct and in full conformance with this code and State Law. The statutory fee for approval shall be submitted to the County Surveyor before certification of the final plat is made.

D. Approval of the Director of Public Works - The Director of Public Works shall review and sign the final plat if all of the requirements of Section 46.070 and 46.090(E)(5) have been met.

E. Approval of the Board of County Commissioners - After review of the final plat by the Planning Director, County Assessor, County Tax Collector, County Surveyor, and Public Works Director, the final plat shall be submitted to the Board of County Commissioners. The Board of County Commissioners shall sign the plat and accept it for recordation if the final plat meets all requirements of this code and state statutes.

F. Filing of Final Plat - After obtaining all required approvals and signatures, the applicant shall record the original plat with the County Clerk and file an exact copy with the County Surveyor. Approval of the final plat shall be null and void if the plat is not recorded within 2 years of the final decision on the preliminary plat. The applicant shall furnish 1 print of the final plat to the County Assessor, the Director of Public Works, and the County Planning Director.

G. Filing Reports with the State - The subdivider shall file appropriate reports with the State Real Estate Commissioner, in accordance with Oregon Revised Statutes, Chapter 92.

46.110 – STANDARDS FOR THE CONVERSION OF EXISTING MANUFACTURED/MOBILE HOME PARKS (MHP) TO MANUFACTURED/MOBILE HOME PARK SUBDIVISIONS (MHPS)

A. Manufactured/Mobile Home Parks to be converted to a subdivision must have been approved prior to July 2, 2001 and continue to exist, & either be in compliance with the Land Development Code or an approved nonconforming use. For all proposed conversions the following standards shall be met:

1. The proposed plan does not increase the number of lots, as defined in ORS 446.003, approved for the park, change the boundary lines or make other development changes.

2. Manufactured/Mobile Home Park Subdivisions shall be no less than one acre in size.

3. The average lot size for Manufactured/Mobile Home Park Subdivisions shall be a minimum of 3200 square feet in size.

4. A maximum of ten lots shall be allowed per acre.

5. The average lot width and depth shall be as least 40 feet and 80 feet respectively.

6. All setbacks within the Manufactured/Mobile Home Park Subdivision shall be 5 feet on all sides for each lot.

7. There shall be no less than 10 ft between manufactured dwellings on separate lots within the Manufactured/Mobile Home Park Subdivision.

8. No building or structure shall exceed twenty-five feet in height within the Manufactured/Mobile Home Park Subdivision.

9. Sight obscuring screening shall be required for all exterior boundaries of the Manufactured/Mobile Home Park Subdivision as provided in Section 64.060.

10. Areas of ingress/egress for the Manufactured/Mobile Home Park Subdivision shall maintain appropriate vision clearance pursuant to Section 62.060.

11. Vehicular access shall be onto a dedicated street or highway and be subject to the approval of the Klamath County Public Works Director or the State Highway Division.

12. Street width shall be at least 20 feet or 30 feet if on-street parking is permitted.

13. All streets within a Manufactured/Mobile Home Park Subdivision shall remain private streets.

14. For each dwelling within the Manufactured/Mobile Home Park Subdivision there shall be at least two parking spaces provided, on each lot and/or on the street.

15. Play areas and common areas (i.e. places available for all occupants of the Manufactured/Mobile Home Park to use) that are in existence at the time the subdivision conversion occurs shall remain and not be converted to a new use.

16. A Homeowners Association shall maintain all private streets, utilities, common areas and play areas within a Manufactured/Mobile Home Park Subdivision.

17. Proof of signed Homeowners Association Declarations will be provided to the Planning Department prior to submitting the Final Platt.

18. Signs may be permitted pursuant to Article 66.

19. Landscaping is required for Manufactured/Mobile Home Park Subdivisions pursuant to Article 65.

20. Criteria found in Article 46.050 to 46.060 and 46.080 to 46.100 regarding land subdivisions shall apply to Manufactured/Mobile Home Park Subdivisions.

B. Once a Manufactured/Mobile Home Park is successfully converted into a subdivision, the Manufactured/Mobile Home Park will not adopt standard zoning but shall conform to the applicable criteria described in Part A and D of this Section, and any additional criteria determined by the Homeowners Association.

C. Any future expansion of an existing Manufactured/Mobile Home Park Subdivision beyond its original boundary will be treated as a land subdivision and is subject to Article 46 and the zoning provisions of Chapter 50.

D. New or replaced dwellings within a MHPS may be of any type given that the following standards are met:

1. If the lot size is less than 5,000 square feet the setbacks shall conform to Section 46.110(A)(6) of this Article.

2. If the lot size is 5,000 square feet or greater, the setbacks of RM zoning pursuant to Article 62 shall apply.

3. A manufactured home placed in a MHPS shall conform to the standards set forth in Article 84 except as explained in 46.110(D)(4). Note: a MHPS is no longer considered a designated Manufactured/Mobile Home Park.

4. A garage or carport required for dwellings within the UGB pursuant to Article 11 (Single Family Dwelling) and 84.010(A)(7), is not necessary if the lot size is less than 5,000 square feet.

EXHIBIT I (Surveyor's Certificate)

SURVEYOR'S CERTIFICATE

STATE OF OREGON)
) ss.
COUNTY OF KLAMATH)

I, _____, Surveyor, hereby certify that I have correctly surveyed, subdivided and platted (Number and Name of Subdivision) _____
_____
situated in Section, Township, Range: _____, more particularly described as follows:

(Specific Legal Description)

and that I made such survey and plat by order of and under the direction of the owners thereof; that the size of all lots and the widths of all streets are as shown on the subdivision plat; and that all lot corners, boundary corners and the initial point are marked with proper monuments as provided in ORS 92.060.

_____
Surveyor

_____
Date

EXHIBIT II (Owner's Declaration)

DECLARATION

STATE OF OREGON)
) ss.
COUNTY OF KLAMATH)

We, _____, husband and wife, being duly sworn, depose and say that we are the owners of (Number and Name of Subdivision), more particularly described in the Surveyor's Certificate, that we did cause the same to be surveyed and platted as shown on the subdivision plat and we do for ourselves, our heirs and assigns, hereby dedicate, donate and convey to the public use forever, all streets, alleys and ways on said plat being subject to:

(List all building setbacks, special restrictions, utility easements, irrigation easements, street reservations, street plugs, covenants, etc.)

_____

_____

STATE OF OREGON)
) ss.
COUNTY OF KLAMATH)

Be it remembered that on this _____ day of _____, 20____, personally appeared before me _____, husband and wife, who are known to me to be the identical persons described in and who executed the above instrument, and who acknowledged to me that they executed the same freely and voluntarily.

IN WITNESS WHEREOF, I have hereunto set my hand and affixed my official notary seal this _____ day of _____, 20 __.

_____
NOTARY PUBLIC FOR OREGON

_____
My Commission Expires

EXHIBIT III (Corporate Owner's Declaration)

DECLARATION

STATE OF OREGON)
) ss.
COUNTY OF KLAMATH)

This is to certify that (Name of Corporation) is a corporation duly organized and existing under and by virtue of the laws of the State of Oregon, and is the owner of the land described in the Surveyor's Certificate, said lands to be hereafter known as (Number and Name of Subdivision); and said (Name of Corporation) did cause the same to be surveyed and platted as shown on the subdivision plat and does for itself, its transferees, successors, and assigns hereby dedicate, donate, and convey to the public use forever, all streets, alleys and ways on said plat being subject to:

(List all building setbacks, special restrictions, utility easements, irrigation easements, street reservations, street plugs, covenants, etc.)

IN WITNESS WHEREOF, (Name of Corporation) pursuant to a resolution of its Board of Directors, duly and legally adopted, has caused these presents to be signed by its (Name of Officers) and its corporate seal affixed hereto.

_____

_____

STATE OF OREGON)
) ss.
COUNTY OF KLAMATH)

Be it remembered that on this _____ day of _____, 20___, personally appeared before me (Corporate Officers) and known to me to be the identical person(s) described in and who executed the above instrument, and who acknowledged to me that they executed the same freely and voluntarily as such officers on behalf of said corporation by authority of its Board of Directors.

IN WITNESS WHEREOF, I have hereunto set my hand and affixed by official notary seal this _____ day of _____, 20___.

_____
NOTARY PUBLIC FOR OREGON
My Commission Expires: _____

EXHIBIT IV (Approvals)

Examined and recommended for approval by the Klamath County Board of Commissioners this _____ day of _____, 20__.

_____
Planning Director

Examined and recommended for approval by the Klamath County Board of Commissioners this _____ day of _____, 20__.

_____
County Surveyor

Approved by the Klamath County Board of Commissioners
this _____ day of _____, 20__.

BOARD OF COUNTY COMMISSIONERS

_____
Chairman of the Board

_____
County Commissioner

_____
County Commissioner

EXHIBIT V (Bonding Agreement)

An agreement and assurance of performance for the installation of **(Type of Improvement)** has been executed with the Director of Public Works this _____ day of _____ 20 __.

_____
Director of Public Works

Or, if all improvements are installed prior to be submission of the final plat, then the following statement shall appear:

All improvements have been examined and approved by the Klamath County Director of Public Works this _____day of _____ 20 __..

_____
Director of Public Works

EXHIBIT VI (County Assessor's Certificate)

I hereby certify that pursuant to ORS 92.095, all ad valorem taxes and all special assessments, fees and other charges required by law to be placed on the **(year)** tax roll which became a lien on this subdivision or will become a lien during this calendar year but not yet certified to the tax collector for collection, have been paid to me.

County Assessor _____ By _____
Deputy

_____
Date

EXHIBIT VII (County Tax Collector Certificate)

I hereby certify that all ad valorem taxes and all special assessments, fees and other charges required by law to be placed upon the tax roll which have become a lien on this subdivision and that are now due and payable have been paid.

County Tax Collector _____ By _____
Deputy

_____
Date

EXHIBIT VIII (Filing Statement)

Filed for record this _____ day of _____, 20__.

County Clerk _____ By _____
Deputy

EXHIBIT IX (Certification of the Copy)

I do hereby certify that this is a true and exact copy of the original plat **(Name of Subdivision)** as filed with this office.

County Clerk _____ By _____
Deputy

I do hereby certify that this is a true and exact copy of the original plat

_____ surveyed, subdivided and platted.

Registered Land Surveyor _____
(signature)

EXHIBIT X (Sewage Disposal System Certificate)

SEWAGE DISPOSAL SYSTEM CERTIFICATE

I, **(name of subdivider)**, hereby certify that no sewage disposal facility will be provided to the purchaser of any lot depicted on the plat.

Signature of Subdivider

Date

EXHIBIT XI (Sewage Disposal System Certificate)

SEWAGE DISPOSAL SYSTEM CERTIFICATE

I, **(city-owned sewage disposal system or by the owner of a privately-owned sewage disposal system that is subject to regulation by the Oregon Public Utility Commission)** hereby certify that a sewage disposal system will be available to the lot line of each and every lot depicted on the plat.

Signature

Title

Date

EXHIBIT XII (Water Supply Certificate)

WATER SUPPLY CERTIFICATE

I, **(name of subdivider)**, hereby certify that no domestic water supply facility will be provided to the purchaser of any lot depicted on the plat.

_____
Signature of Subdivider

_____
Date

EXHIBIT XIII (Water Supply Certificate)

WATER SUPPLY CERTIFICATE

I, **(city-owned domestic water supply system or the owner of a privately-owned domestic water supply system, subject to regulation by the Oregon Public Utility Commission)**, certify that water will be available to the lot line of each and every lot depicted on the plat.

_____
Signature

_____
Title

_____
Date

ARTICLE 47
CHANGE OF ZONE DESIGNATION (QUASI-JUDICIAL)

47.010 - PURPOSE

The purpose of the quasi-judicial change of zone designation is to provide for revisions to the land use zone designation in response to individual landowner requests and a demonstrated need.

47.020 - REVIEW PROCEDURE

An application for a change of zone designation shall be reviewed according to the Hearings Officer Review Procedure (Article 24).

47.030 - REVIEW CRITERIA

A. A request for a change of zone designation may only be approved if it meets all applicable review criteria.

B. A request for a change of zone designation shall be reviewed against the following criteria:

1. The proposed change of zone designation is in conformance with the Comprehensive Plan and does not afford special privileges to an individual property owner not available to the general public or outside the overall public interest for the change;

2. The property affected by the change of zone designation is adequate in size and shape to facilitate any uses allowed in conjunction with such zoning;

3. The property affected by the proposed change of zone designation is properly related to streets and roads and to other public facilities and infrastructure to adequately serve the types of uses allowed in conjunction with such zoning and the proposed change is in compliance with the Transportation Planning Rule (TPR) OAR 660-012-0060 (to demonstrate compliance with the TPR the applicant shall submit a Traffic Impact Study pursuant to Section 71.200);

4. The proposed change of zone designation will have no significant adverse effect on the appropriate use and development of adjacent properties; and

5. The proposed change is supported by specific studies or other factual information, which documents the need for the change.

47.040 - PROCESSING

Applications for a change of zone designation shall be processed as follows:

A. Initiation - An application for a change of zone designation may be initiated by the owner, or agent of the owner, of the property proposed for the zone change. An agent's application shall be authorized in writing by the owner.

B. Filing - An application for a change of zone designation shall be filed on forms provided by the Planning Department, shall set forth in detail all necessary information, and shall be accompanied by a site plan drawn to the requirements of Section 41.060 and any other requirements of this code. If the development does not have direct permitted access for the intended use to an established public right-of-way, the applicant shall provide documentation demonstrating proof of legal access. The documentation must be complete, legible, presented in a graphic form and orderly manner, and include source documents such as deeds or grants of easements, neither a preliminary title report nor a title policy shall be considered proof of legal access.

C. Pre-application Conference - An application for a change of zone designation shall be subject to the pre-application procedures (Article 21).

D. Filing Fee - An application for a change of zone designation shall be accompanied by a filing fee set by the Board of County Commissioners to defray costs incidental to the review process.

E. Incomplete Applications - Applications which are found to be incomplete or inaccurate by the Planning Director or his/her designee shall be returned to the applicant within 5 business days of submittal along with a statement of specific deficiencies to be corrected. The applicant shall have 30 days from the postmark date of the notice in which to submit an amended application. If the applicant fails to complete or correct the application within the time provided, the application shall be deemed complete and transmitted to the appropriate review body with a recommendation for denial.

F. Within 5 business days of receiving an application, the Planning Director or his/her designee shall check the National Wetlands Inventory maps, located in the Planning Department, to determine if the site proposed for development may have a wetland located on it. If it is determined that a wetland may be located on a site proposed for development, the Planning Director or his/her designee shall notify the Division of State Lands on a form provided. A copy of the letter shall be sent to the applicant. A final decision on the application

cannot be rendered until the 30-day comment period, which begins on the day the notification letter is sent, has expired.

G. Time Limitation - No request for a change of zone designation shall be considered by a review body within a one-year period immediately following a previous denial of such request.

ARTICLE 48
CHANGE OF COMPREHENSIVE PLAN DESIGNATION
(QUASI-JUDICIAL)

48.010 - PURPOSE

The purpose of the quasi-judicial change of Comprehensive Plan designation and the corresponding implementing zone designation is to provide for revisions to the Comprehensive Plan map in response to individual land owner requests and changing public needs for the allocation and development of land in the County.

48.020 - REVIEW PROCEDURE

An application for a change of Comprehensive Plan designation may be reviewed jointly according to the Planning Commission Review Procedure (Article 26) and the Board of County Commissioners Review Procedure (Article 28).

48.030 - REVIEW CRITERIA

A. A request for a change of Comprehensive Plan designation may only be approved if it meets all applicable review criteria;

B. A request for a change of Comprehensive Plan designation shall be reviewed against the following criteria:

   1. The proposed change is supported by specific studies or other factual information, which documents the public need for the change;

   2. The proposed change complies with policies of the Comprehensive Plan and policies and standards of the Urban Area Transportation System Plan; and

   3. The proposed change complies with the Oregon State wide Planning Goals and Administrative Rules, including compliance with the TPR (OAR 660-012-0060). To document compliance with the TPR the applicant shall submit a Traffic Impact Study pursuant to Section 71.200. Exceptions to the Statewide Planning Goals, shall be based upon Statewide Planning Goal 2, Part II (Exceptions) as interpreted by Oregon Administrative Rules (OAR Chapter 660, Division 4).

48.040 - PROCESSING

Applications for a change of Comprehensive Plan designation shall be processed as follows:

A. Initiation - An application for a change of Comprehensive Plan Designation shall be initiated by the owner, or agent of the owner, of the property proposed as the site of the Comprehensive Plan change. An agent's application shall be authorized in writing by the owner.

B. Filing - An application for a change of Comprehensive Plan designation shall be filed on forms provided by the Planning Department, shall set forth in detail all necessary information, and shall be accompanied by a site plan drawn to the requirements of Section 41.060 and any other requirements of this code.

C. Pre-application Conference - An application for a change of Comprehensive Plan designation shall be subject to the provisions of a pre-application conference (Article 21).

D. Filing Fee - An application for a change of Comprehensive Plan designation shall be accompanied by a filing fee set by the Board of County Commissioners to defray costs incidental to the review process.

E. Incomplete Applications - Applications that are found to be incomplete or inaccurate by the Planning Director or his/her designee shall be returned to the applicant within 5 days of submittal along with a statement of specific deficiencies to be corrected. The applicant shall have 30 days from the postmark date of the notice in which to submit an amended application. If the applicant fails to complete or correct the application within the time provided, the applicant shall be deemed complete and transmitted to the appropriate review body with a recommendation for denial.

F. Within 5 days of receiving an application, the Planning Director or his/her designee shall check the National Wetlands Inventory maps, located in the Planning Department, to determine if the site proposed for development may have a wetland located on it. If it is determined that a wetland may be located on a site proposed for development, the Planning Director or his/her designee shall notify the Division of State Lands on a form provided. A copy of the letter shall be sent to the applicant. A final decision on the application cannot be rendered until the 30-day comment period, which begins on the day the notification letter is sent, has expired.

G. Time Limitation - No request for a change of Comprehensive Plan designation shall be considered by a review body within a one-year period immediately following a previous denial of such request.

ARTICLE 49
LEGISLATIVE AMENDMENT TO THE KLAMATH COUNTY COMPREHENSIVE PLAN, LAND DEVELOPMENT CODE, OR ZONING MAP

49.010 - PURPOSE

The purpose of amendments to the Klamath County Comprehensive Plan or Land Development Code is to provide for changes based on periodic assessments of development patterns and land use allocations or public need, and in order to carry out the Oregon Statewide Planning Goals or state statutes. Amendments to the Comprehensive Plan shall be based on new information and an overall public need for the change, and shall be made as the result of periodic studies or reviews. Amendments to the Land Development Code shall be made in response to amendments to the Comprehensive Plan, or to provide for the continued efficient administration of this code.

49.020 - REVIEW PROCEDURE

Amendments to the Comprehensive Plan or Land Development Code shall be made according to the Planning Commission Review Procedure (Article 26) and the Board of County Commissioners Review Procedures (Article 28). Public hearings may be scheduled jointly or separately at the discretion of the Board of County Commissioners.

49.030 - REVIEW CRITERIA

A. An amendment to the Comprehensive Plan or Land Development Code may only be approved if it meets all applicable review criteria.

B. An amendment to the Comprehensive Plan or Land Development Code shall be reviewed against the following criteria:

   1. The proposed amendment is supported by specific studies or other factual information, which documents the public need for the change;

   2. The proposed amendment complies with policies of the Comprehensive Plan and policies and standards of the Urban Area Transportation System Plan; and

   3. The proposed amendment complies with the Oregon Statewide Planning Goals, state statutes, and administrative rules, including compliance with the TPR (OAR 660-012-0060). To document compliance with the TPR

the applicant shall submit a Traffic Impact Study pursuant to Section 71.200.

49.040 - PROCESSING

Applications for amendments to the Comprehensive Plan or Land Development Code shall be processed as follows:

A. Initiation by the Planning Director - The Planning Director may initiate proceedings to amend the Comprehensive Plan or Land Development Code by informing the Planning Commission Chairperson and the Board of County Commissioners Chairperson of the proposal, and acting to schedule a public hearing pursuant to Chapter 30.

B. Initiation by the Planning Commission - The Planning Commission may direct the Planning Director to prepare amendments to the Comprehensive Plan or Land Development Code for its consideration, and to schedule a public hearing pursuant to Chapter 30.

C. Initiation by the Board of County Commissioners - The Board of County Commissioners may direct the Planning Director to prepare amendments to the Comprehensive Plan or Land Development Code for the consideration of the Planning Commission and Board of County Commissioners, and to schedule a public hearing pursuant to Chapter 30.

D. Initiation by a citizen - A citizen may initiate an amendment to the Klamath County Comprehensive Plan and the Land Development Code for the consideration of the Planning Commission and the Board of Commissioners. A public hearing will be scheduled pursuant to Chapter 30. A fee shall be charged for such an application

E. Amendments to the Urban Growth Boundary or Urban Growth Boundary Management Agreement - Amendments may be initiated by the County, the affected city or by a county or city resident or property owner in accordance with the provisions of the respective County-City Urban Growth Boundary Management Agreement.

CHAPTER 50
LAND USE ZONES

ARTICLE 50
BASIC PROVISIONS

50.010 - PURPOSE

The purposes of this chapter are to establish land use zones required to implement the goals and policies of the Klamath County Comprehensive Plan, to define the purpose of each zone, and to specify the types of land uses appropriate for each zone. More specifically, the zones are formulated:

A. To permit orderly and beneficial development, while protecting the character of neighborhoods and communities, and the social and economic stability of the County;

B. To reconcile discordant land uses by identifying the relationship between compatible uses which minimize land use conflicts;

C. To support the protection and preservation of the agricultural and silvicultural industry and the natural resources essential to the conduct of those industries;

D. To support the protection and preservation of the County's open space and recreational resources while providing for appropriate development;

E. To provide areas where agricultural, residential, commercial and industrial uses may be developed in harmonious patterns and with all the necessities for satisfactory living and working environments; and

F. To further the goals and policies of the Klamath County Comprehensive Plan.

50.020- LIST OF BASIC ZONES

The following basic zones are established:

RCR	Rural Community Residential
R-10	Rural Residential
R-5	Rural Residential
R-2	Rural Residential
R-1	Rural Residential
RS	Suburban Residential
RL	Low Density Residential
RM	Medium Density Residential
RH	High Density Residential
CN	Neighborhood Commercial

CG	General Commercial
CR	Recreational Commercial
CT	Transportation Commercial
RUC-C	Rural Community Commercial
RSC-C	Rural Service Center Commercial
RCR-C	Rural Community Resort Commercial
IL	Light Industrial
IH	Heavy Industrial
ART	Air/Rail Transportation
RUC-I	Rural Community Industrial
RSC-I	Rural Service Center Industrial
EFU	Exclusive Farm Use
F	Forestry
FR	Forestry/Range
NR	Non-Resource
OS&C	Open Space and Conservation
TRP	Train Park

50.030 - LIST OF SPECIAL PURPOSE ZONES

The following special purpose zones are established:

SRO	Significant Resource Overlay
ASK	Airport Safety Overlay - Kingsley Field
ANK	Airport Noise Overlay - Kingsley Field
AS	Airport Safety Overlay - Beaver Marsh, Chiloquin, Crescent Lake & Malin
FHZ	Flood Hazard Overlay
GEO	Geothermal Overlay
LU	Limited Use Overlay
IAMP	OR 66 Green Springs Hwy Interchange Area Management Plan

50.040 – TRANSPORTATION-RELATED USES

A. The following transportation-related improvements and activities are considered "Essential Services" uses and are permitted outright in all County zones, unless otherwise specified in individual zones.

1. Normal operation, maintenance, repair, and preservation activities of existing transportation facilities.
2. Installation of culverts, pathways, medians, fencing, guardrails, lighting, and similar types of improvements within the existing right-of way.
3. Projects specifically identified in the Klamath Falls Urban Area Transportation System Plan and the County Wide Transportation System Plan.
4. Landscaping as part of a transportation facility.
5. Emergency measures necessary for the safety and protection of property.
6. Acquisition of right-of-way for public roads, highways, and other transportation improvements designated in the Urban Area Transportation System Plan, except for those that are located in exclusive farm use or forest zones.
7. Construction of a street or road as part of an approved subdivision or land partition approved that is consistent with the applicable land division regulations.

B. The following transportation-related improvements and activities are considered "Extensive Impact Services and Utilities" uses and are permitted conditionally in all County zones, unless otherwise specified in individual zones.

1. Construction, reconstruction, or widening of highways, roads, bridges or other transportation projects that are:
    a. Not improvements designated in the Urban Area Transportation System Plan; or
    b. Not designed and constructed as part of a subdivision or planned development subject to site plan and/or conditional use review.
    c. An application for site plan review is subject to review under Article 41. In addition, the site plan permit shall comply with the Urban Area Transportation System Plan and applicable standards of this section, and shall address the criteria below. For State projects that require an Environmental Impact Statement (EIS) or EA (Environmental Assessment), the draft EIS or EA shall be reviewed and used as the basis for findings to comply with the following criteria:
        1) The project is designed to be compatible with existing land use and social patterns, including noise generation, safety, and zoning.
        2) The project is designed to minimize avoidable environmental impacts to identified wetlands, wildlife habitat, air and water quality, cultural resources, and scenic qualities.
        3) The project preserves or improves the safety and function of

the facility though access management, traffic calming, or other design features.

4) The project includes provision for bicycle and pedestrian circulation as consistent with the Comprehensive Plan and other requirements of this Code.

ARTICLE 51
RURAL COMMUNITY RESIDENTIAL (RCR)

51.010 - PURPOSE

The purpose of this zone is to establish and maintain areas within rural communities for residential uses where existing parcel sizes are generally under one acre and where the availability of water and sewer systems makes the existence of such parcels feasible.

51.020 - PERMITTED USES

The following uses shall be permitted subject to site plan review of Article 41, and all other applicable standards, criteria, rules, and statutes governing such uses:

A. Single-family dwelling
B. Manufactured Home
C. Essential Services
D. Small Animals - not to exceed 24 animals per acre
E. Large Animals if lot is over 20,000 square feet, not more than 2 animals per acre
F. Home Day Care
G. Residential Care Home
H. Accessory Buildings and Uses
I. Community Park
J. Residential Care Facility

51.030 - CONDITIONAL USES

The following uses may be permitted subject to standards listed in this article and if the provisions of Article 44 are satisfied:

A. Multiple-family dwelling
B. Schools
C. Community Assembly
D. Churches
E. Manufactured Home Park
F. Extensive Impact Services and Utilities
G. Cemeteries
H. Kennel
I. Bed and Breakfast
J. Emergency Services
K. Mobile Home
L. RV Parks

51.040 - PROPERTY DEVELOPMENT STANDARDS

A. Minimum Lot Size - 5,000 square feet

B. Residential Density - 1 dwelling per lot or parcel

C. Lot Size and Shape - See Article 61

D. Building Heights and Setbacks - See Article 62

E. Fences, Walls and Screening - See Article 64

F. Landscaping - See Article 65

G. Signs - See Article 66

H. Parking - See Article 68

I. Access - See Article 71

ARTICLE 51.1
RURAL RESIDENTIAL (R-10)

51.110 - PURPOSE

The purpose of this zone is to establish and maintain areas for rural residential uses. This zone allows for large lot residential uses and for small-scale hobby farming. The zone also serves as a buffer between urban uses and natural resource areas.

Typically, this zone is appropriate in rural or semi-rural areas where the existing land use pattern consists of lots greater than one acre in size. This zone may be applied where existing or proposed public facilities and services appropriately serve a density of less than one dwelling per 10 acres, or where there is a transition between urban levels of service and rural areas of service.

51.120 - PERMITTED USES

The following uses shall be permitted subject to site plan review of Article 41, and all other applicable standards, criteria, rules, and statutes governing such uses:

A. Single-family dwelling
B. Manufactured Home
C. Essential Services
D. Small Animals - not to exceed 24 animals per acre
E. Large Animals - not to exceed 2 animals per acre
F. Home Day Care
G. Residential Care Home
H. Accessory Buildings and Uses
I. Community Park
J. Emergency Services
K. Residential Care Facility

51.130 - CONDITIONAL USES

The following uses may be permitted subject to standards listed in this article and if the provisions of Article 44 are satisfied:

A. Animal Raising, specialty
B. Extensive Impact Services and Utilities
C. Cemeteries
D. Schools
E. Community Assembly
F. Churches
G. Kennel
H. Bed and Breakfast
I. Mobile Home

51.140 - PROPERTY DEVELOPMENT STANDARDS

A. Minimum Lot Size - 10 Acres

B. Residential Density - 1 dwelling per lot or parcel

C. Lot Size and Shape - See Article 61

D. Building Heights and Setbacks - See Article 62

E. Fences, Walls and Screening - See Article 64

F. Landscaping - See Article 65

G. Signs - See Article 66

H. Parking - See Article 68

I. Access - See Article 71

ARTICLE 51.2
RURAL RESIDENTIAL (R-5)

51.210 - PURPOSE

The purpose of this zone is to establish and maintain areas for rural residential uses. This zone allows for large lot residential uses and for small-scale hobby farming. The zone also serves as a buffer between urban uses and natural resource areas.

Typically, this zone is appropriate in rural or semi-rural areas where the existing land use pattern consists of lots greater than one acre in size. This zone may be applied where existing or proposed public facilities and services appropriately serve a density of less than one dwelling per 5 acres, or where there is a transition between urban levels of service and rural areas of service.

51.220 - PERMITTED USES

The following uses shall be permitted subject to site plan review of Article 41, and all other applicable standards, criteria, rules, and statutes governing such uses:

A. Single-family dwelling
B. Manufactured Home
C. Essential Services
D. Small Animals - not to exceed 24 animals per acre
E. Large Animals - not to exceed 2 animals per acre)
F. Home Day Care
G. Residential Care Home
H. Accessory Buildings and Uses
I. Community Park
J. Emergency Services
K. Residential Care Facility

51.230 - CONDITIONAL USES

The following uses may be permitted subject to standards listed in this article and if the provisions of Article 44 are satisfied:

A. Animal Raising, specialty
B. Extensive Impact Services and Utilities
C. Cemeteries
D. Schools
E. Community Assembly
F. Churches
G. Kennel
H. Bed and Breakfast
I. Mobile Home
J. The creation of a new parcel or parcels smaller than the minimum lot size only if the criteria in Article 45.120 are met

51.240 - PROPERTY DEVELOPMENT STANDARDS

A. Minimum Lot Size - 5 Acres

B. Residential Density - 1 dwelling per lot or parcel

C. Lot Size and Shape - See Article 61

D. Building Heights and Setbacks - See Article 62

E. Fences, Walls and Screening - See Article 64

F. Landscaping - See Article 65

G. Signs - See Article 66

H. Parking - See Article 68

I. Access - See Article 71

ARTICLE 51.3
RURAL RESIDENTIAL (R-2)

51.310 - PURPOSE

The purpose of this zone is to establish and maintain areas for rural residential uses. This zone allows for large lot residential uses and for small-scale hobby farming. The zone also serves as a buffer between urban uses and natural resource areas.

Typically, the zone is appropriate in rural or semi-rural areas where the existing rural land use pattern consists of lots less than one acre in size. This zone may be applied where existing or proposed public facilities or services appropriately serve a density of one dwelling per acre, or where there is a transition between urban levels of service and rural levels of service.

51.320 - PERMITTED USES

The following uses shall be permitted subject to site plan review of Article 41, and all other applicable standards, criteria, rules and statutes governing such use:

A. Single-family dwelling
B. Manufactured Home
C. Essential Services
D. Small Animals - not to exceed 24 animals per acre
E. Large Animals - not to exceed 2 animals per acre
F. Home Day Care
G. Residential Care Home
H. Residential Care Facility
I. Accessory Buildings and Uses
J. Community Park
K. Emergency Services

51.330 - CONDITIONAL USES

The following uses may be permitted subject to standards listed in this article and if the provisions of Article 44 are satisfied:

A. Extensive Impact Services and Utilities
B. Cemeteries
C. Schools
D. Community Assembly
E. Churches
F. Animal Raising - Specialty
G. Kennel
H. Bed and Breakfast
I. Mobile Home
J. The creation of a new parcel or parcels smaller than the minimum lot size only if the criteria in Article 45.120 are met

51.340 - PROPERTY DEVELOPMENT STANDARDS

A. Minimum Lot Size - 2 Acres

B. Residential Density - 1 dwelling per lot or parcel

C. Lot Size and Shape - See Article 61

D. Building Heights and Setbacks - See Article 62

E. Fences, Walls and Screening - See Article 64

F. Landscaping - See Article 65

G. Signs - See Article 66

H. Parking - See Article 68

I. Access - See Article 71

ARTICLE 51.4
RURAL RESIDENTIAL (R-1)

51.410 - PURPOSE

The purpose of this zone is to establish and maintain areas for rural residential uses. This zone allows for large lot residential uses and for small-scale hobby farming. The zone also serves as a buffer between urban uses and natural resource areas.

Typically, the zone is appropriate in rural or semi-rural areas where the existing rural land use pattern consists of lots less than one acre in size. This zone may be applied where existing or proposed public facilities or services appropriately serve a density of one dwelling per acre, or where there is a transition between urban levels of service and rural levels of service.

51.420 - PERMITTED USES

The following uses shall be permitted subject to site plan review of Article 41, and all other applicable standards, criteria, rules and statutes governing such use:

A. Single-family dwelling
B. Manufactured Home
C. Essential Services
D. Small Animals - not to exceed 24 animals per acre
E. Large Animals - not to exceed 2 animals per acre
F. Home Day Care
G. Residential Care Home
H. Residential Care Facility
I. Accessory Buildings and Uses
J. Community Park
K. Emergency Services

51.430 - CONDITIONAL USES

The following uses may be permitted subject to standards listed in this article and if the provisions of Article 44 are satisfied:

A. Extensive Impact Services and Utilities
B. Cemeteries
C. Schools
D. Community Assembly
E. Churches
F. Animal Raising - Specialty
G. Kennel
H. Bed and Breakfast
I. Mobile Home
J. The creation of a new parcel or parcels smaller than the minimum lot size only if the criteria in Article 45.120 are met

51.440 - PROPERTY DEVELOPMENT STANDARDS

A. Minimum Lot Size - 1 Acre

B. Residential Density - 1 dwelling per lot or parcel

C. Lot Size and Shape - See Article 61

D. Building Heights and Setbacks - See Article 62

E. Fences, Walls and Screening - See Article 64

F. Landscaping - See Article 65

G. Signs - See Article 66

H. Parking - See Article 68

I. Access - See Article 71

ARTICLE 51.5
SUBURBAN RESIDENTIAL (RS)

51.510 - PURPOSE

The purpose of this zone is to establish and maintain suburban areas for residential use. This zone serves to implement the Comprehensive Plan calling for use of 1 to 4 dwellings units per acre. Typically, this zone is appropriate for neighborhoods where the majority of the lots are large enough to maintain domesticated animals.

51.520 - PERMITTED USES

The following uses shall be permitted subject to site plan review of Article 41, and all other applicable standards, criteria, rules and statutes governing such uses:

A. Single-family dwelling
B. Manufactured Home
C. Essential Service
D. Home Day Care
E. Residential Care Home
F. Residential Care Facility
G. Small Animals - not to exceed 24 animals per acre
H. Large animals if lot is over 20,000 square feet; not to exceed 2 animals per acre.
I. Accessory Buildings and Uses
J. Community Park

51.530 - CONDITIONAL USES

The following uses may be permitted subject to standards listed in this article and if the provisions of Article 44 are satisfied:

A. Additional dwelling if lot or parcel size is 20,000 square feet or greater
B. Manufactured Home Park
C. Extensive Impact Services and Utilities
D. Cemeteries
E. Schools
F. Community Assembly
G. Churches
H. Kennel
I. Emergency Services

51.540 - PROPERTY DEVELOPMENT STANDARDS

A. Minimum Lot Size - 10,000 square feet

B. Residential Density - 1 dwelling per lot or parcel, or one dwelling per 10,000 square feet

C. Lot Size and Shape - See Article 61

D. Building Heights and Setbacks - See Article 62

E. Fences, Walls and Screening - See Article 64

F. Landscaping - See Article 65

G. Signs - See Article 66

H. Parking - See Article 68

I. Access - See Article 71

ARTICLE 51.6
LOW DENSITY RESIDENTIAL (RL)

51.610 - PURPOSE

The purpose of this zone is to establish and maintain areas suitable for low density residential uses. The Low Density Residential zone is intended to implement the Comprehensive Plan designation calling for an optimum residential density between 1 and 6 dwellings per acre.

51.620 - PERMITTED USES

The following uses shall be permitted subject to site plan review of Article 41, and all other applicable standards, criteria, rules and statutes governing such uses:

A. Single-family dwelling
B. Manufactured Home
C. Essential Services
D. Home Day Care
E. Residential Care Facility
F. Residential Care Home
G. Accessory Buildings and Uses
H. Community Park

51.630 - CONDITIONAL USES

The following uses may be permitted subject to standards listed in this article and if the provisions of Article 44 are satisfied:

A. Schools
B. Community Assembly
C. Churches
D. Cemetery
E. Extensive Impact Services and Utilities
F. Emergency Services

51.640 - PROPERTY DEVELOPMENT STANDARDS

A. Minimum Lot Size - 7,000 square feet

B. Residential Density - 1 dwelling per lot

C. Lot Size and Shape - See Article 61

D. Building Heights and Setbacks - See Article 62

E. Fences, Walls and Screening - See Article 64

F. Landscaping - See Article 65

G. Signs - See Article 66

H. Parking - See Article 68

I. Access - See Article 71

ARTICLE 51.7
MEDIUM DENSITY RESIDENTIAL (RM)

51.710 - PURPOSE

The purpose of this zone is to establish and maintain areas for single-family and duplex residences. The Medium Density Residential zone is intended to implement the Comprehensive Plan calling for an optimum residential density up to 8 dwelling units per acre.

51.720 - PERMITTED USES

The following shall be permitted subject to site plan review of Article 41, and all other applicable standards, criteria, rules and statutes governing such uses:

A. Single-family dwelling
B. Duplex
C. Manufactured Home
D. Mobile Home Park
E. Essential Services
F. Home Day Care
G. Residential Care Facility
H. Residential Care Home
I. Accessory Buildings and Uses
J. Community Park

51.730 - CONDITIONAL USES

The following uses may be permitted subject to standards listed in this article and if the provisions of Article 44 are satisfied:

A. Multifamily dwelling
B. Schools
C. Community Assembly
D. Churches
E. Cemetery
F. Extensive Impact Services and Utilities
G. Emergency Services

51.740 - PROPERTY DEVELOPMENT STANDARDS

A. Minimum Lot Size - 5,000 square feet

B. Residential Density - 1 single-family dwelling unit per lot, or 1 duplex or multifamily dwelling per 8,000 square feet

C. Lot Size and Shape - See Article 61

D. Building Heights and Setbacks - See Article 62

E. Fences, Walls and Screening - See Article 64

F. Landscaping - See Article 65

G. Signs - See Article 66

H. Parking - See Article 68

I. Access - See Article 71

ARTICLE 51.8
HIGH DENSITY RESIDENTIAL (RH)

51.810 - PURPOSE

The purpose of this zone is to provide and maintain higher densities of dwelling units in urban areas where the level of public services can adequately accommodate such development. The High Density Residential zone is appropriate in areas near schools, recreation, employment and transportation services. This zone is intended to implement the Comprehensive Plan calling for residential densities of up to 24 dwelling units per acre.

51.820 - PERMITTED USES

The following shall be permitted subject to site plan review of Article 41, and all other applicable standards, criteria, rules and statutes governing such uses:

A. Multifamily dwelling
B. Mobile Home Park
C. Essential Services
D. Home Day Care
E. Residential Care Facility
F. Residential Care Home
G. Accessory Buildings and Uses
H. Community Park

51.830 - CONDITIONAL USES

The following uses may be permitted subject to standards listed in this article and if the provisions of Article 44 are satisfied:

A. Single-Family dwelling
B. Duplex
C. Manufactured Dwelling
D. Schools
E. Community Assembly
F. Churches
G. Cemetery
H. Extensive Impact Services and Utilities
I. Emergency Services

51.840 - PROPERTY DEVELOPMENT STANDARDS

A. Minimum Lot Size - 10,000 square feet, 10-24 units per acre

B. Residential Density - 1 single-family dwelling per lot, or 1 multiple-family dwelling unit per 2,000 square feet

C. Lot Size and Shape - See Article 61

D. Building Heights and Setbacks - See Article 62

E. Fences, Walls and Screening - See Article 64

F. Landscaping - See Article 65

G. Signs - See Article 66

H. Parking - See Article 68

I. Access - See Article 71

ARTICLE 52.2
NEIGHBORHOOD COMMERCIAL (CN)

52.210 - PURPOSE

The purpose of this zone is to establish and maintain places for limited retail sales and services that are accessible and convenient to nearby residents. The Neighborhood Commercial zone is applied to areas serving only a limited, local market, and is intended to permit only those uses which do not create adverse impacts that are incompatible with nearby residences.

52.220 - PERMITTED USES

The following uses shall be permitted subject to site plan review of Article 41, and all other applicable standards, criteria, rules, and statutes governing such uses:

A. Administrative Services
B. Community Park
C. Essential Services
D. Medical Services
E. Parking Services
F. Food and Beverage Sales
G. Personal Services
H. Professional Offices
I. Repair Services
J. Retail Sales
K. Accessory Buildings and Uses

52.230 - CONDITIONAL USES

The following uses may be permitted subject to standards listed in this article and if the provisions of Article 44 are satisfied:

A. Community Assembly
B. Schools
C. Extensive Impact Services and Utilities
D. Churches
E. Auto Service Station
F. Food and Beverage Service
G. Emergency Services

52.240 - PROPERTY DEVELOPMENT STANDARDS

A. Minimum Lot Size - 10,000 square feet

B. Maximum Building Gross Floor Area per Use - 3,000 square feet

   In no case shall the Gross Floor Area for one structure or group of structures treated as a common whole exceed 15,000 square feet.

C. Lot Size and Shape - See Article 61

D. Building Heights and Setbacks - See Article 62

E. Fences, Walls and Screening - See Article 64

F. Landscaping - See Article 65

G. Signs - See Article 66

H. Parking - See Article 68

I. Access - See Article 71

ARTICLE 52.4
GENERAL COMMERCIAL (CG)

52.410 - PURPOSE

The purpose of this zone is to establish and maintain places for a full range of retail goods and services available to a large area.

52.420 - PERMITTED USES

The following uses shall be permitted subject to site plan review of Article 41, and all other applicable standards, criteria, rules, and statutes governing such uses:

A. Administrative Service

B. Emergency Services

C. Essential Services

D. Medical Services

E. Parking Services

F. Agricultural Supplies and Services

G. Auto Sales/Rentals/Service

H. Auto Repairs

I. Auto Service Station

J. Building and Garden Sales

K. Entertainment Facilities

L. Farm Equipment Sales/Rentals/Service

M. Fleet Storage

N. Food and Beverage Sales

O. Food and Beverage Service

P. General Merchandise Sales

Q. Heavy Equipment Sales/Rentals/Service

R. Home Furnishings and Appliances

S. Manufactured Dwelling Sales

T. Personal Services

U. Professional Offices

V. Repair Services

W. Retail Sales

X. Warehousing, Storage and Distribution - light

Y. Custom Manufacturing

Z. Accessory Buildings and Uses

Aa. Mini Storage Facility

Bb. Motels/Hotels within the Klamath Falls UGB

Cc. Indoor Sports and Recreation

52.430 - CONDITIONAL USES

The following uses may be permitted subject to standards listed in this article and if the provisions of Article 44 are satisfied:

A. Community Assembly

B. Schools

C. Cultural Services

D. Extensive Impact Services and Utilities

E. Churches

F. RV Parks

G. Heavy Equipment Repairs

H. Large Animal Veterinary Services

I. Kennel

J. Truck Stop

K. Auto Wrecking Yard

L. Worker Residential

M. Manufactured Home Park

N. Towing Facility

52.440 - PROPERTY DEVELOPMENT STANDARDS

A. Minimum Lot Size - 5,000 square feet

B. Lot Size and Shape - See Article 61

C. Building Heights and Setbacks - See Article 62

D. Fences, Walls and Screening - See Article 64

E. Landscaping - See Article 65

F. Signs - See Article 66

G. Parking - See Article 68

H. Access - See Article 71

I. Building size limitations for commercial uses on unincorporated commercial lands in Klamath County:

1. New Commercial Uses.

   a. Urban Growth Boundaries – No building size limitations.

   b. Goal 14 Exception Areas – No building size limitations unless specified by the exception.

   c. Urban Unincorporated Communities Designated Pursuant to OAR Chapter 660, Division 22 – Building size shall not exceed 8,000 square feet of floor space per building.

   d. Unincorporated Communities Designated Pursuant to OAR Chapter 660, Division 22 – Building size shall not exceed 4,000 square feet of floor space per building.

   e. Rural Lands Not Included in a - d Above – Building size shall not exceed 3,500 square feet of floor space per building.

2. Existing Commercial Uses.

   a. Urban Growth Boundaries – No building size limitations.

   b. Goal 14 Exception Areas – No building size limitations unless specified by the exception.

   c. Urban Unincorporated Communities Designated Pursuant to OAR Chapter 660, Division 22 – Klamath County has no designated Urban Unincorporated Communities as of the effective date of this Ordinance.

   d. Unincorporated Communities Designated Pursuant to OAR Chapter 660, Division 22 – A lawfully established commercial use that existed prior to December 13, 2005 may expand to occupy a maximum of 5,000 square feet of floor space per building, or an additional 50% of the floor space currently occupied, whichever is greater.

e. Rural Lands Not Included in a - d Above – A lawfully established commercial use that existed prior to December 13, 2005 may expand to occupy a maximum of 4,000 square feet of floor space per building, or an additional 50% of the floor space currently occupied, whichever is greater.

3. Commercial Uses Primarily Designed to Serve Resource Industries (e.g. Farming, Ranching, Forestry or Mineral Extraction).

   a. Urban Growth Boundaries – No building size limitations.

   b. Goal 14 Exception Areas – No building size limitations unless specified by the exception.

   c. Urban Unincorporated Communities Designated Pursuant to OAR Chapter 660, Division 22 – Notwithstanding paragraphs 1 and 2 of this subsection commercial uses primarily designed to serve resource industries are not subject to any building size limitation when permitted through a Type II Administrative Review. Such uses may be permitted through a Type I Administrative Review when building size does not exceed 8,000 square feet.

   d. Unincorporated Communities Designated Pursuant to OAR Chapter 660, Division 22 – Notwithstanding paragraphs 1 and 2 of this subsection commercial uses primarily designed to serve resource industries are not subject to any building size limitation when permitted through a Type II Administrative Review. Such uses may be permitted through a Type I Administrative Review when building size does not exceed 4,000 square feet.

   e. Rural Lands Not Included in a - d Above – Notwithstanding paragraphs 1 and 2 of this subsection commercial uses primarily designed to serve resource industries are not subject to any building size limitation when permitted through a Type II Administrative Review. Such uses may be permitted through a Type I Administrative Review when building size does not exceed 3,500 square feet.

4. New or Expanded Commercial Uses Intended to Serve the Rural Area or the Needs of the Traveling Public.

   a. Urban Growth Boundaries – No building size limitations.

   b. Goal 14 Exception Areas – No building size limitations unless specified by the exception.

c. Urban Unincorporated Communities Designated Pursuant to OAR Chapter 660, Division 22 – Notwithstanding paragraphs 1 and 2 of this subsection commercial uses primarily designed to serve resource industries are not subject to any building size limitation when permitted through a Type II Administrative Review. Such uses may be permitted through a Type I Administrative Review when building size does not exceed 8,000 square feet.

d. Unincorporated Communities Designated Pursuant to OAR Chapter 660, Division 22 – Notwithstanding paragraphs 1 and 2 of this subsection commercial uses primarily designed to serve resource industries are not subject to any building size limitation when permitted through a Type II Administrative Review. Such uses may be permitted through a Type I Administrative Review when building size does not exceed 4,000 square feet.

e. Rural Lands Not Included in a-d Above – Notwithstanding paragraphs 1 and 2 of this subsection commercial uses primarily designed to serve the Rural Area or the Needs of the Traveling public are not subject to any building size limitation when permitted through a Type II Administrative Review. Such uses may be permitted through a Type I Administrative Review when building size does not exceed 3,500 square feet.

J. For any proposed development which fails to satisfy the relevant standards of subsection I. above; Klamath County shall require an exception to Goal 14.

K. All non-commercial uses that lawfully existed prior to the adoption of this Ordinance shall be considered lawful established non-conforming uses, which may be restored to their prior lawfully approved size if destroyed or substantially damaged.

ARTICLE 52.6
RECREATIONAL COMMERCIAL (CR)

52.610 - PURPOSE

The purpose of this zone is to establish and maintain places for recreational facilities and accessory services available to a large area or region.

52.620 - PERMITTED USES

A. Administrative Service

B. Community Park

C. Golf Course

D. Essential Services

E. Medical Services

F. Auto Service Station

G. Commercial Campground

H. Food and Beverage Sales

I. Food and Beverage Service

J. Commercial Stables

K. Hotel/Motel

L. Resort

M. Retail Sales

N. Emergency Services

O. Accessory Buildings and Uses

52.630 - CONDITIONAL USES

The following uses may be permitted subject to standards listed in this article and if the provisions of Article 44 are satisfied:

A. Bed and Breakfast

B. Community Assembly

C. Cultural Services

D. Extensive Impact Services and Utilities

E. Churches

F. Custom Manufacturing

G. Worker Residential

H. RV Parks

52.640 - PROPERTY DEVELOPMENT STANDARDS

A. Minimum Lot Size - 1 acre

B. Lot Size and Shape - See Article 61

C. Building Heights and Setbacks - See Article 62

D. Fences, Walls and Screening - See Article 64

E. Landscaping - See Article 65

F. Signs - See Article 66

G. Parking - See Article 68

H. Access - See Article 71

I. Building size limitations for commercial uses on unincorporated commercial lands in Klamath County:

1. New Commercial Uses.

   a. Urban Growth Boundaries – No building size limitations.

   b. Goal 14 Exception Areas – No building size limitations unless specified by the exception.

   c. Urban Unincorporated Communities Designated Pursuant to OAR Chapter 660, Division 22 – Building size shall not exceed 8,000 square feet of floor space per building.

   d. Unincorporated Communities Designated Pursuant to OAR Chapter 660, Division 22 – Building size shall not exceed 4,000 square feet of floor space per building.

   e. Rural Lands Not Included in a - d Above – Building size shall not exceed 3,500 square feet of floor space per building.

2. Existing Commercial Uses.

   a. Urban Growth Boundaries – No building size limitations.

   b. Goal 14 Exception Areas – No building size limitations unless specified by the exception.

   c. Urban Unincorporated Communities Designated Pursuant to OAR Chapter 660, Division 22 – Klamath County has no designated Urban Unincorporated Communities as of the effective date of this Ordinance.

d. Unincorporated Communities Designated Pursuant to OAR Chapter 660, Division 22 – A lawfully established commercial use that existed prior to December 13, 2005 may expand to occupy a maximum of 5,000 square feet of floor space per building, or an additional 50% of the floor space currently occupied, whichever is greater.

e. Rural Lands Not Included in a - d Above – A lawfully established commercial use that existed prior to December 13, 2005 may expand to occupy a maximum of 4,000 square feet of floor space per building, or an additional 50% of the floor space currently occupied, whichever is greater.

3. <u>Commercial Uses Primarily Designed to Serve Resource Industries (e.g. Farming, Ranching, Forestry or Mineral Extraction).</u>

a. Urban Growth Boundaries – No building size limitations.

b. Goal 14 Exception Areas – No building size limitations unless specified by the exception.

c. Urban Unincorporated Communities Designated Pursuant to OAR Chapter 660, Division 22 – Notwithstanding paragraphs 1 and 2 of this subsection commercial uses primarily designed to serve resource industries are not subject to any building size limitation when permitted through a Type II Administrative Review. Such uses may be permitted through a Type I Administrative Review when building size does not exceed 8,000 square feet.

d. Unincorporated Communities Designated Pursuant to OAR Chapter 660, Division 22 – Notwithstanding paragraphs 1 and 2 of this subsection commercial uses primarily designed to serve resource industries are not subject to any building size limitation when permitted through a Type II Administrative Review. Such uses may be permitted through a Type I Administrative Review when building size does not exceed 4,000 square feet.

e. Rural Lands Not Included in a-d Above – Notwithstanding paragraphs 1 and 2 of this subsection commercial uses primarily designed to serve resource industries are not subject to any building size limitation when permitted through a Type II Administrative Review. Such uses may be permitted through a Type I Administrative Review when building size does not exceed 3,500 square feet.

4. New or Expanded Commercial Uses Intended to Serve the Rural Area or the Needs of the Traveling Public.

   a. Urban Growth Boundaries – No building size limitations.

   b. Goal 14 Exception Areas – No building size limitations unless specified by the exception.

   c. Urban Unincorporated Communities Designated Pursuant to OAR Chapter 660, Division 22 – Notwithstanding paragraphs 1 and 2 of this subsection commercial uses primarily designed to serve resource industries are not subject to any building size limitation when permitted through a Type II Administrative Review. Such uses may be permitted through a Type I Administrative Review when building size does not exceed 8,000 square feet.

   d. Unincorporated Communities Designated Pursuant to OAR Chapter 660, Division 22 – Notwithstanding paragraphs 1 and 2 of this subsection commercial uses primarily designed to serve resource industries are not subject to any building size limitation when permitted through a Type II Administrative Review. Such uses may be permitted through a Type I Administrative Review when building size does not exceed 4,000 square feet.

   e. Rural Lands Not Included in a-d Above – Notwithstanding paragraphs 1 and 2 of this subsection commercial uses primarily designed to serve the Rural Area or the Needs of the Traveling public are not subject to any building size limitation when permitted through a Type II Administrative Review. Such uses may be permitted through a Type I Administrative Review when building size does not exceed 3,500 square feet.

J. For any proposed development which fails to satisfy the relevant standards of subsection I. above; Klamath County shall require an exception to Goal 14.

K. All non-commercial uses that lawfully existed prior to the adoption of this Ordinance shall be considered lawful established non-conforming uses, which may be restored to their prior lawfully approved size if destroyed or substantially damaged.

ARTICLE 52.8
TRANSPORTATION COMMERCIAL (CT)

52.810 - PURPOSE

The purpose of this zone is to establish and maintain places for sales and services primarily related to transportation and utility industries. The Transportation Commercial zone is appropriate for commercial uses associated with highway, rail or air transportation.

52.820 - PERMITTED USES

The following uses shall be permitted subject to site plan review of Article 41, and all other applicable standards, criteria, rules, and statutes governing such uses:

A. Administrative Services

B. Essential Services

C. Medical Services

D. Parking Services

E. Auto Sales/Rentals/Services

F. Auto Repairs

G. Auto Service Station

H. Fleet Storage

I. Food and Beverage Sales

J. Food and Beverage Service

K. Heavy Equipment Repairs

L. Heavy Equipment Sales/Rentals/Service

M. Hotel/Motel

N. Manufactured Dwelling Sales

O. Repair Services

P. Truck Stop

Q. Warehousing, Storage and Distribution - light

R. Emergency Services

S. Accessory Buildings and Uses

T. RV Parks

U. Mini Storage Facility

V. Indoor Sports and Recreation

52.830 - CONDITIONAL USES

The following uses may be permitted subject to standards listed in this article and if the provisions of Article 44 are satisfied:

A. Extensive Impact Services and Utilities

B. Farm Equipment Sales/Rentals/Service

C. Warehousing, Storage and Distribution - heavy

D. Auto Wrecking Yard

E. Worker Residential

F. Towing Facility

52.840 - PROPERTY DEVELOPMENT STANDARDS

A. Minimum Lot Size - 5,000 square feet

B. Lot Size and Shape - See Article 61

C. Building Heights and Setbacks - See Article 62

D. Fences, Walls and Screening - See Article 64

E. Landscaping - See Article 65

F. Signs - See Article 66

G. Parking - See Article 68

H. Access - See Article 71

I. Building size limitations for commercial uses on unincorporated commercial lands in Klamath County:

   1. New Commercial Uses.

      a. Urban Growth Boundaries – No building size limitations.

      b. Goal 14 Exception Areas – No building size limitations unless specified by the exception.

      c. Urban Unincorporated Communities Designated Pursuant to OAR Chapter 660, Division 22 – Building size shall not exceed 8,000 square feet of floor space per building.

      d. Unincorporated Communities Designated Pursuant to OAR Chapter 660, Division 22 – Building size shall not exceed 4,000 square feet of floor space per building.

e. Rural Lands Not Included in a - d Above – Building size shall not exceed 3,500 square feet of floor space per building.

2. Existing Commercial Uses.

   a. Urban Growth Boundaries – No building size limitations.

   b. Goal 14 Exception Areas – No building size limitations unless specified by the exception.

   c. Urban Unincorporated Communities Designated Pursuant to OAR Chapter 660, Division 22 – Klamath County has no designated Urban Unincorporated Communities as of the effective date of this Ordinance.

   d. Unincorporated Communities Designated Pursuant to OAR Chapter 660, Division 22 – A lawfully established commercial use that existed prior to December 13, 2005 may expand to occupy a maximum of 5,000 square feet of floor space per building, or an additional 50% of the floor space currently occupied, whichever is greater.

   e. Rural Lands Not Included in a - d Above – A lawfully established commercial use that existed prior to December 13, 2005 may expand to occupy a maximum of 4,000 square feet of floor space per building, or an additional 50% of the floor space currently occupied, whichever is greater.

3. Commercial Uses Primarily Designed to Serve Resource Industries (e.g. Farming, Ranching, Forestry or Mineral Extraction).

   a. Urban Growth Boundaries – No building size limitations.

   b. Goal 14 Exception Areas – No building size limitations unless specified by the exception.

   c. Urban Unincorporated Communities Designated Pursuant to OAR Chapter 660, Division 22 – Notwithstanding paragraphs 1 and 2 of this subsection commercial uses primarily designed to serve resource industries are not subject to any building size limitation when permitted through a Type II Administrative Review. Such uses may be permitted through a Type I Administrative Review when building size does not exceed 8,000 square feet.

d. Unincorporated Communities Designated Pursuant to OAR Chapter 660, Division 22 – Notwithstanding paragraphs 1 and 2 of this subsection commercial uses primarily designed to serve resource industries are not subject to any building size limitation when permitted through a Type II Administrative Review. Such uses may be permitted through a Type I Administrative Review when building size does not exceed 4,000 square feet.

e. Rural Lands Not Included in a - d Above – Notwithstanding paragraphs 1 and 2 of this subsection commercial uses primarily designed to serve resource industries are not subject to any building size limitation when permitted through a Type II Administrative Review. Such uses may be permitted through a Type I Administrative Review when building size does not exceed 3,500 square feet.

4. New or Expanded Commercial Uses Intended to Serve the Rural Area or the Needs of the Traveling Public.

   a. Urban Growth Boundaries – No building size limitations.

   b. Goal 14 Exception Areas – No building size limitations unless specified by the exception.

   c. Urban Unincorporated Communities Designated Pursuant to OAR Chapter 660, Division 22 – Notwithstanding paragraphs 1 and 2 of this subsection commercial uses primarily designed to serve resource industries are not subject to any building size limitation when permitted through a Type II Administrative Review. Such uses may be permitted through a Type I Administrative Review when building size does not exceed 8,000 square feet.

   d. Unincorporated Communities Designated Pursuant to OAR Chapter 660, Division 22 – Notwithstanding paragraphs 1 and 2 of this subsection commercial uses primarily designed to serve resource industries are not subject to any building size limitation when permitted through a Type II Administrative Review. Such uses may be permitted through a Type I Administrative Review when building size does not exceed 4,000 square feet.

e. Rural Lands Not Included in a - d Above – Notwithstanding paragraphs 1 and 2 of this subsection commercial uses primarily designed to serve the Rural Area or the Needs of the Traveling public are not subject to any building size limitation when permitted through a Type II Administrative Review. Such uses may be permitted through a Type I Administrative Review when building size does not exceed 3,500 square feet.

J. For any proposed development which fails to satisfy the relevant standards of subsection I. above; Klamath County shall require an exception to Goal 14.

K. All non-commercial uses that lawfully existed prior to the adoption of this Ordinance shall be considered lawful established non-conforming uses, which may be restored to their prior lawfully approved size if destroyed or substantially damaged.

ARTICLE 52.91
RURAL COMMUNITY COMMERCIAL (RUC-C) ZONE

52.911 PURPOSE:

This zone establishes/maintains areas for the concentration of local commercial services in order to meet the needs of rural residents, and tourist commercial services consistent with the character of the community.

52.912 PERMITTED USES:

A. The following uses shall be permitted subject to site plan review of Article 41, and all other applicable standards, criteria, rules, and statutes governing such uses:

1. Agricultural Supplies and Services
2. Commercial Campground
3. Golf Course
4. Commercial Stables
5. Emergency Services
6. Motel/Hotel up to 35 Units only if served by a community sewer system.
7. Uses determined by the Planning Director to be similar to those listed in this section to serve the recreational, public, and travel needs of the community and surrounding area as provided for by Article 12.070B(1) of the Land Development Code.

B. The following uses shall be permitted if the following criteria are met: (1) building or buildings do not exceed 4,000 square-feet of floor space. (2) Completion of Article 41 site plan review and approval. (3) All other applicable standards, criteria, rules, and statues governing such uses are satisfied:

1. Auto Service Station
2. Auto Repairs/Sales/Rentals/Service
3. Farm Equipment Sales/Rental/Service
4. Heavy Equipment Sales/Rentals/Service
5. Heavy Equipment Repairs
6. Miscellaneous Repair Services
7. Food and Beverage Sales/Service
8. Building and Garden Sales
9. General Merchandise Sales
10. Retail Sales
11. Home Furnishings and Appliances
12. Mini-Storage Facility
13. Administrative Service
14. Essential Services
15. Medical Services

16. Personal Services
17. Professional Offices
18. Custom Manufacturing
19. R.V. Parks
20. Accessory Building and Uses
21. Fleet Storage
22. Manufactured Dwelling Sales
23. Truck Stops
24. Uses determined by the Planning Director to be similar to those listed in this section to serve the recreational, public, and travel needs of the community and surrounding area as provided for by Article 12.070B(1) of the Land Development Code.

52.913 Conditional Uses:

The following uses may be permitted subject to standards listed in this article and if the provisions of Article 44 are satisfied:

A. Bed and Breakfast
B. Community Assembly
C. Cultural Services
D. Churches
E. Extensive Impact Services and Utilities
F. School
G. Veterinary Services
H. Warehousing, Storage and Distribution-Light/Heavy
I. Worker Residential
J. Uses determined by the Planning Director to be similar to those listed in this section to serve the recreational, public, and travel needs of the community and surrounding area as provided for by Article 12.070B(1) of the Land Development Code.

52.914 Property Development Standards:

A. Minimum lot size - 5,000 square feet; and

1. The site shall be of sufficient size to accommodate an On Site Sewage Collection System, unless such system can be accessed by easement or water is to be provided by a public provider.

2. Will not result in public health hazards or adverse environmental impacts that violate state or water quality regulations and meet the development standards of the Klamath County Health Department and the Oregon Department of Environmental Quality.

3. Will meet water and sewer requirements.

B. Lot Size and Shape - See Article 61

C. Building Height and Setback - See Article 62, General Commercial

D. Fences, Wall, and Screening - See Article 64

E. Landscaping - See Article 65

F. Signs - See Article 66, General Commercial

G. Parking - See Article 68

H. Access - See Article 71

I. Building Size:

1. Uses listed above as Permitted Uses (52.912(2)) and Conditional Uses (52.913) shall not exceed the 4,000 square-foot limit unless:

    a. The use is approved as a plan amendment under the provision of Article 47, 48, and 49; and

    b. The use is limited pursuant to Article 59.8, Limited Use Overlay, to a size of building or buildings that is intended to serve the community, surrounding rural area or the travel needs of people passing through the area.

2. A lawfully established use that existed prior to the adoption of this Article may expand to occupy 4,000 square feet of floor area within a building(s). *If the use within the unincorporated community is determined to serve the community or the travel needs of people passing through the area,* the floor area may be expanded to occupy a maximum of 4,000 square feet, *or* an additional 50% of the floor area currently occupied, whichever is greater.

3. A floor-space to lot-size ratio of 0.5 for those new small-scale low-impact permitted or conditional uses that occur on vacant commercial, *substandard* size parcels. (Example: a 4,000 square foot (0.09 acre) parcel x 0.5 may accommodate a 2,000 square foot commercial structure).

ARTICLE 52.92
RURAL SERVICE CENTER COMMERCIAL (RSC-C) ZONE

52.921 PURPOSE

This zone establishes/maintains areas for the concentration of local commercial services in order to meet the needs of rural residents, and tourist commercial services consistent with the character of the community.

52.922 PERMITTED USES

A. The following uses shall be permitted subject to site plan review of Article 41, and all other applicable standards, criteria, rules, and statutes governing such uses:

1. Agricultural Supplies and Services
2. Commercial Campground
3. Commercial Stables
4. Emergency Services
5. Motel/Hotel up to 35 Units
6. Uses determined by the Planning Director to be similar to those listed in this section to serve the recreational, public, and travel needs of the community and surrounding area as provided for by Article 12.070B(1) of the Land Development Code.

B. The following uses shall be permitted if the following criteria are met: (1) Building or buildings do not exceed 4,000 square-feet of floor space. (2) Completion of Article 41 site plan review and approval. (3) All other applicable standards, criteria, rules, and statues governing such uses are satisfied:

1. Auto Service Station
2. Auto Repairs/Sales/Rentals/Service
3. Farm Equipment Sales/Rental/Service
4. Heavy Equipment Sales/Rentals/Service
5. Heavy Equipment Repairs
6. Miscellaneous Repair Services
7. Food and Beverage Sales/Service
8. Building and Garden Sales
9. General Merchandise Sales
10. Retail Sales
11. Home Furnishings and Appliances
12. Mini-Storage Facility
13. Administrative Service
14. Essential Services
15. Medical Services

16. Personal Services
17. Professional Offices
18. Custom Manufacturing
19. Golf Course
20. R.V. Parks
21. Accessory Building and Uses
22. Fleet Storage
23. Manufactured Dwelling Sales
24. Truck Stops
25. Uses determined by the Planning Director to be similar to those listed in this section to serve the recreational, public, and travel needs of the community and surrounding area as provided for by Article 12.070B(1) of the Land Development Code.

52.923 CONDITIONAL USES

The following uses may be permitted subject to standards listed in this article and if the provisions of Article 44 are satisfied and the following criteria are met: (1) Building or buildings do not exceed 4,000 square-feet of floor space.

A. Bed and Breakfast
B. Community Assembly
C. Cultural Services
D. Churches
E. Extensive Impact Services and Utilities
F. School
G. Veterinary Services
H. Warehousing, Storage and Distribution-Light/Heavy
I. Worker Residential
J. Uses determined by the Planning Director to be similar to those listed in this section to serve the recreational, public, and travel needs of the community and surrounding area as provided for by Article 12.070B(1) of the Land Development Code.

52.924 PROPERTY DEVELOPMENT STANDARDS:

A. Minimum lot size - 5,000 square feet; and

1. The site shall be of sufficient size to accommodate an On Site Sewage Collection System, unless such system can be accessed by easement or water is to be provided by a public provider.

2. Will not result in public health hazards or adverse environmental impacts that violate state or water quality regulations and meet the development standards of the Klamath County Health Department and the Oregon Department of Environmental Quality.

3. Will meet water and sewer requirements.

B. Lot Size and Shape - See Article 61

C. Building Height and Setback - See Article 62, General Commercial

D. Fences, Wall, and Screening - See Article 64

E. Landscaping - See Article 65

F. Signs - See Article 66, General Commercial

G. Parking - See Article 68

H. Access - See Article 71

I. Building Size:

1. Uses listed above as Permitted Uses (52.922{2}) and Conditional Uses (52.923) shall not exceed the 4,000 square-foot limit unless:

    a. The use is approved as a plan amendment under the provision of Article 47,48,and 49; and

    b. The use is limited pursuant to Article 59.8, Limited Use Overlay, to a size of building or buildings that is intended to serve the community, surrounding rural area or the travel needs of people passing through the area.

2. A lawfully established use that existed prior to the adoption of this Article may expand to occupy 4,000 square feet of floor area within a building(s). *If the use within the unincorporated community is determined to serve the community or the travel needs of people passing through the area*, the floor area may be expanded to occupy a maximum of 4,000 square feet, or an additional 50% of the floor area currently occupied, whichever is greater.

3. A floor-space to lot-size ratio of 0.5 for those new small-scale low-impact permitted or conditional uses that occur on vacant commercial, *substandard* size parcels. (Example; a 4,000 square foot (0.09 acre) parcel x 0.5 may accommodate a 2,000 square foot commercial structure).

ARTICLE 52.93
RURAL COMMUNITY RESORT COMMERCIAL (RCR-C) ZONE

52.931 - PURPOSE

This zone establishes/maintains areas for the concentration of rural resort commercial services, and shall apply within the boundaries of the unincorporated rural resort communities of Rocky Point and Crescent Lake.

Additionally:

1. A Rural Community Commercial (RUC-C) zoning district shall apply to commercial lands within the boundaries of Beatty and Sprague River.

2. A Rural Community Resort Commercial (RUC-C) zoning district shall be applied to the existing commercial lands within the boundaries of the unincorporated rural resort communities of Rocky Point and Crescent Lake.

52.932 Permitted Uses:

1. Uses intended to provide for the concentration of local commercial services in order to meet the needs of rural residents, and tourist commercial services consistent with the character of the community. The following uses shall be permitted if the following criteria are met: (1) completion of Article 41(site plans review/approval) and (2) all other applicable standards, criteria, rules, and statues governing such uses are satisfied:

    A. Emergency Services

    B. Parks

    C. Commercial Campground

    D. Uses determined by the Planning Director to be similar to those listed in this section to serve the recreational, public, and travel needs of the community and surrounding area as provided for by Article 12.070B(1) of the Land Development Code.

2. The following uses shall be permitted if the following criteria are met (1) building or buildings do not exceed 4,000 square feet of floor space (2) completion of Article 41 site plan review/approval and (3) all other applicable standards, criteria, rules, and statues governing such uses are satisfied:

    A. Administrative Service

    B. Auto Repair

    C. Auto Service Station

D. Food and Beverage Sales and Service

E. Medical Services

F. Personal Services

G. Professional Offices

H. Repair Services

I. Retail Sales

J. Uses determined by the Planning Director to be similar to those listed in this section to serve the recreational, public, and travel needs of the community and surrounding area as provided for by Article 12.070B(1) of the Land Development Code.

52.933 Conditional Uses:

The following uses may be permitted subject to standards listed in this article and if the provisions of Article 44 are satisfied, and if the following criteria are met (1) building or buildings do not exceed 4,000 square feet of floor space (2) completion of Article 41 site plan review/approval and (3) all other applicable standards, criteria, rules, and statues governing such uses are satisfied:

A. Bed and Breakfast

B. Churches

C. Community Assembly

D. Cultural Service

E. Golf Course

F. Mini-Storage Facility

G. RV Parks

H. Veterinary Service

I. Worker Residential

J. Resorts

K. Motels/Hotels/Resort Lodges any number of units only if served by a community sewer system.

L. Uses determined by the Planning Director to be similar to those listed in this section to serve the recreational, public, and travel needs of the community and surrounding area as provided for by Article 12.070B(1) of the Land Development Code.

52.934 - Property Development Standards:

A. Minimum lot size – 1 acre, and

1. The site shall be of sufficient size to accommodate an On Site Sewage Collection System, unless such system can be accessed by easement or water is to be provided by a public provider.
2. Will not result in public health hazards or adverse environmental impacts that violate state or water quality regulations and meet the development standards of the Klamath County Health Department and the Oregon Department of Environmental Quality.
3. Will meet water and sewer requirements.

B. Lot Size and Shape - See Article 61

C. Building Height and Setback - See Article 62, General Commercial

D. Fences, Wall, and Screening - See Article 64

E. Landscaping - See Article 65

F. Signs - See Article 66, General Commercial

G. Parking - See Article 68

H. Building Size:

1. Uses listed above as Permitted Uses (52.932{2}) and Conditional Uses (52.933) shall not exceed the 4,000 square-foot limit unless:

    a. The use is approved as a plan amendment under the provision of Article 47, 48, and 49; and

    b. The use is limited pursuant to Article 59.8, Limited Use Overlay, to a size of building or buildings that is intended to serve the community, surrounding rural area or the travel needs of people passing through the area.

2. A lawfully established use that existed prior to the adoption of this Article may expand to occupy 4,000 square feet of floor area within a building(s). *If the use within the unincorporated community is determined to meet the needs of rural residents and provide for tourist services,* the floor area may be expanded to occupy a maximum of 4,000 square feet, *or* an additional 50% of the floor area currently occupied, whichever is greater.

3. A floor-space to lot-size ratio of 0.5 for those new small-scale low-impact permitted or conditional uses that occur on vacant commercial, *substandard* size parcels. (Example; a 4,000 square foot (0.09 acre) parcel x 0.5 may accommodate a 2,000 square foot commercial structure).

ARTICLE 53.2
LIGHT INDUSTRIAL (IL)

53.210 - PURPOSE

The purpose of this zone is to establish and maintain places where manufacturing, storage and wholesale distribution can be undertaken in close proximity to one another without encroaching upon the character of the adjacent land uses. It is not the purpose of the Light Industrial zone to permit the processing of raw materials.

53.220 - PERMITTED USES

The following uses shall be permitted subject to site plan review of Article 41, and all other applicable standards, criteria, rules, and statutes governing such uses:

A. Administrative Services
B. Essential Services
C. Parking Services
D. Agricultural Packing and Processing
E. Agricultural Supplies and Services
F. Auto Sales/Rentals/Service
G. Auto Repairs
H. Building and Garden Sales
I. Fleet Storage
J. Heavy Equipment Repairs
K. Heavy Equipment Sales/Rentals/Service
L. Manufactured Dwelling Sales
M. Warehousing, Storage and Distribution - heavy
N. Warehousing, Storage and Distribution - light
O. Custom Manufacturing
P. General Manufacturing
Q. Secondary Processing of Forest Products
R. Mineral Processing, except Mining
S. Accessory Buildings and Uses
T. Mini Storage Facility
U. Indoor Sports and Recreation

53.230 - CONDITIONAL USES

The following uses may be permitted subject to standards listed in this article and if the provisions of Article 44 are satisfied:

A. Extensive Impact Services and Utilities
B. Agricultural Waste Processing
C. Stockyards
D. Auto Wrecking Yard

E. Scrap Operations
F. Worker Residential
G. Food and Beverage Service

53.240 - PROPERTY DEVELOPMENT STANDARDS

A. No parcel planned and zoned for industrial use as of November 15, 1990, shall be further partitioned or subdivided except for a specific industrial use listed in Section 53.220 or Section 53.230, and verification is provided in the form of the following:

   1. A letter of credit or other verification that funds or financing has been secured or approved for the proposed use; and
   2. Construction working drawings for the proposed facility; and
   3. A letter of intent from a prospective industrial company.

B. Lot Size and Shape - See Article 61

C. Building Heights and Setbacks - See Article 62

D. Fences, Walls and Screening - See Article 64

E. Landscaping - See Article 65

F. Signs - See Article 66

G. Parking - See Article 68

H. Access - See Article 71

ARTICLE 53.4
HEAVY INDUSTRIAL (IH)

53.410 - PURPOSE

The purpose of this zone is to establish and maintain places where large areas of land are needed for the fabrication, processing, and movement of raw materials and where the potential impacts of noise, odor, vibration, glare, and/or heat are least likely to affect adjacent land uses.

53.420 - PERMITTED USES

The following uses shall be permitted subject to site plan review of Article 41, and all other applicable standards, criteria, rules, and statutes governing such uses:

A. Essential Services
B. Agricultural Packing and Processing
C. Agricultural Waste Processing
D. Stockyards
E. Warehousing, Storage and Distribution - heavy
F. Warehousing, Storage and Distribution - light
G. Auto Wrecking Yard
H. Custom Manufacturing
I. General Manufacturing
J. Heavy Industrial
K. Scrap Operation
L. Secondary Processing of Forest Products
M. Mini Storage Facility

53.430 - CONDITIONAL USES

The following uses may be permitted subject to standards listed in this article and if the provisions of Article 44 are satisfied:

A. Extensive Impact Services and Utilities
B. Explosive and Hazardous Materials
C. Food and Beverage Service
D. Worker Residential
E. Mining and Mineral Processing, provided the site follows the review procedure and meets criteria established in Section 81.040 of this Code.

53.440 - PROPERTY DEVELOPMENT STANDARDS

A. No parcel planned and zoned for industrial uses as of November 15, 1990, shall be further partitioned or subdivider except for a specific industrial use listed in Section 53.420 or Section 53.430, and verification is provided in the form of the following:

   1. A letter of credit or other verification that funds or financing has been secured or approved for the proposed use; and

   2. Construction working drawings for the proposed facility; and

   3. A letter of intent from a prospective industrial company.

B. Lot Size and Shape - See Article 61

C. Building Heights and Setbacks - See Article 62

D. Fences, Walls and Screening - See Article 64

E. Landscaping - See Article 65

F. Signs - See Article 66

G. Parking - See Article 68

H. Access - See Article 71

ARTICLE 53.5
AIR/RAIL TRANSPORTATION

53.510 - PURPOSE

The purpose of this zone is to enhance the economic viability of Klamath County by encouraging the development of sites to business that would benefit from being located in close proximity to a major transportation facility.

53.520 - PERMITTED USES

The following uses shall be permitted subject to site plan review (Article 41) and all other applicable standards, criteria, rules, and statutes governing such uses:

A. Industrial

1. Fleet Storage
2. General Manufacturing
3. Secondary Processing of Forest Products
4. Explosive and Hazardous Materials
5. Agricultural Processing

B. Commercial

1. Parking Service
2. Warehousing, Storage and Distribution - light and heavy
3. Accessory Buildings and Uses
4. Mini Storage Facility
5. Heavy Equipment Repairs
6. Heavy Equipment Sales/Rental/Service
7. Essential Services
8. Auto Rentals and Services
9. Farm Equipment Sales/Rental/Service
10. Emergency Services

53.530 - PROPERTY DEVELOPMENT STANDARDS

A. Industrial

1. Lot Size and Shape - See Article 61

2. Building Heights and Setbacks - See Article 62

3. Fences, Walls and Screening - See Article 64

4. Landscaping - See Article 65

5. Signs - See Article 66

6. Parking - See Article 68

7. Access - See Article 71

B. Commercial

1. Minimum Lot Size (5,000 square feet)

2. Lot Size and Shape - See Article 61

3. Building Heights and Setbacks - See Article 62

4. Fences, Walls and Screening - See Article 64

5. Landscaping - See Article 65

6. Signs - See Article 66

7. Parking - See Article 68

8. Access - See Article 71

C. Any air/rail uses designated in Section 53.520(A) and (B) shall maintain a 500 foot buffer area around any existing residence.

ARTICLE 53.91
RURAL COMMUNITY INDUSTRIAL (RUC-I) ZONE

53.911 PURPOSE:

This zone establishes/maintains places where land is needed for the fabrication, processing, storage, and movement of raw materials where the potential impact of noise, odor, vibration, glare, and /or heat are least likely to affect adjacent land uses. It is intended to (1) promote appropriate economic development; (2) protect the existing character of the area; (3) preserve or enhance the air, water, and land resources of the area.

A Rural Commercial Industrial (RUC-I) zoning district shall apply to existing industrial lands within the boundaries of Beatty.

53.912 PERMITTED USES:

The following uses shall be permitted if the following criteria are satisfied (1) building or buildings do not exceed 10,000 square-feet of floor space; (2) completion of Article 41, Site Plan Review, and; (3) all other applicable standards, criteria, rules, and statues governing such uses:

A. Agriculture Packing and Processing

B. Agriculture Supplies and Services

C. Auto Repairs

D. Custom/General Manufacturing

E. Essential Services

F. Heavy Equipment Repairs

G. Mini Storage Facility

H. Saw Mill

I. Secondary Processing of Forest Products

J. Warehousing, Storage and Distribution-Heavy/Light

K. Administrative Services

L. Auto Sale/Rental Service

M. Building and Garden Sales

N. Fleet Storage

O. Heavy Equipment Sales/Rental/Services

P. Manufactured Dwelling Sales

Q. Accessory Buildings and Uses

R. Uses determined by the Planning Director to be similar to those listed in this section to promote appropriate economic development, protect the existing character, preserve or enhance the air, water, and land resources of the area as provided for by Article 12.070B(1) of the Land Development Code.

53.913 CONDITIONAL USES:

The following uses may be permitted subject to standards listed in this article and if the provisions of Article 44 are satisfied and the following criteria are met: (1) Building or buildings do not exceed 10,000 square-feet of floor space:

A. Extensive Impact Services and Utilities

B. Agricultural Waste Processing

C. Stockyards

D. Worker Residential

E. Food and Beverage Service

F. Heavy Industrial

G. Uses determined by the Planning Director to be similar to those listed in this section to promote appropriate economic development, protect the existing character, preserve or enhance the air, water, and land resources of the area as provided for by Article 12.070B(1) of the Land Development Code.

53.914 USE LIMITATIONS:

The following limitation and standards shall apply to all permitted and conditional uses:

A. Any permitted use that meets the following criteria shall require a conditional use permit:

   1. Any use expected to generate more than 30-truck-trailer or other heavy equipment trips per day to/from the property which is adjacent to or across from a residential dwelling, a lot in a platted subdivision, or a residential zone.

2. Any use expected to generate more than 20 auto or truck trips during the busiest hour of the day to/from the premises.
3. The use is expected to utilize arterial, collector, or other improved street/roads that pass through or are adjacent to residential lots, platted subdivisions, or residential zones.

B. Any use on a lot adjacent to/across from a residential dwelling, a lot in a platted residential subdivision, or a residential zone shall not emit odor, dust, fumes, glare, flashing lights, noise, or similar disturbances perceptible more than 200 feet in the direction of the affected residential use or lot.

C. No use shall be permitted to operate for business between the hours of 10 p.m. and 7a.m., if located adjacent to/across from residential dwellings, lots in platted residential subdivisions or residential zones, and resultant vehicle traffic passes through or is adjacent to residential lots in platted subdivisions or residential zones.

D. No use shall be permitted which has been declared a nuisance by state statute, county ordinance, or a court of competent jurisdiction.

53.915 PROPERTY DEVELOPMENT STANDARDS:

A. No parcel planned and zoned for industrial use as of November 15, 1990, shall be further partitioned except for a specific industrial use listed in Section 53.912 or Section 53.913.

   Verification is provided in the form of the following:

   1. Construction drawings for the proposed facility; and
   2. A letter of intent from a prospective company; and
   3. The site shall be of sufficient size to accommodate an on-site sewage collection system and water system, unless such system can be accessed by easement or water is to be provided by a public provider, and;
   4. Will not result in public health hazards or adverse environmental impacts that violate state or federal water quality regulations; and
   5. Will meet water and sewer requirements.

B. Lot Size and Shape – See Article 61

C. Building heights and Setbacks – See Article 62, Light Industrial

D. Fences, Walls and Screening – See Article 64

E. Landscaping – See Article 65

F. Signs – See Article 66, Light Industrial

G. Parking – See Article 68, Light Industrial

H. Access – see Article 71

I. Building Size:

1. Uses listed above as Permitted Uses (53.912) and Conditional Uses (53.913) shall not exceed the 10,000 square-foot limit unless:

   a. The use is approved as a plan amendment under the provision of Article 47,48,and 49; and

   b. The use is limited pursuant to Article 59.8, Limited Use Overlay, to a size of building or buildings that is intended to serve the community, surrounding rural area, promote appropriate economic development, protect the existing character, and preserve or enhance the air, water, and land resources of the area.

2. A lawfully established use that existed prior to the adoption of this Article may expand to occupy 10,000 square feet of floor area within a building(s). If the use is determined to "promote appropriate economic development, protect the existing character , and preserve or enhance the air, water, and land resources of the area," the floor area may be expanded to occupy a maximum of 10,000 square feet, or an additional 50% of the floor area currently occupied, whichever is greater.

ARTICLE 53.92
RURAL SERVICE CENTER INDUSTRIAL (RSC-I) ZONE

53.921 PURPOSE:

This zone establishes/maintains places where land is needed for the fabrication, processing, storage, and movement of raw materials where the potential impact of noise, odor, vibration, glare, and /or heat are least likely to affect adjacent land uses. It is intended to (1) promote appropriate economic development; (2) protect the existing character of the area; (3) preserve or enhance the air, water, and land resources of the area.

53.922 PERMITTED USES:

The following uses shall be permitted if the following criteria are satisfied (1) building or buildings do not exceed 10,000 square-feet of floor space; (2) completion of Article 41, Site Plan Review, and; (3) all other applicable standards, criteria, rules, and statues governing such uses:

A. Agriculture Packing and Processing
B. Agriculture Supplies and Services
C. Auto Repairs
D. Custom/General Manufacturing
E. Essential Services
F. Heavy Equipment Repairs
G. Mini Storage Facility
H. Saw Mill
I. Secondary Processing of Forest Products
J. Warehousing, Storage and Distribution-Heavy/Light
K. Administrative Services
L. Auto Sale/Rental Service
M. Building and Garden Sales
N. Fleet Storage
O. Heavy Equipment Sales/Rental/Services
P. Manufactured Dwelling Sales
Q. Accessory Buildings and Uses
R. Uses determined by the Planning Director to be similar to those listed in this section to promote appropriate economic development, protect the existing character, preserve or enhance the air, water, and land resources of the area as provided for by Article 12.070B(1) of the Land Development Code.

53.923 CONDITIONAL USES:

The following uses may be permitted subject to standards listed in this article and if the provisions of Article 44 are satisfied and the following criteria are met: (1) Building or buildings do not exceed 10,000 square-feet of floor space.

A. Extensive Impact Services and Utilities
B. Agricultural Waste Processing
C. Stockyards
D. Worker Residential
E. Food and Beverage Service
F. Heavy Industrial
G. Uses determined by the Planning Director to be similar to those listed in this section to promote appropriate economic development, protect the existing character, preserve or enhance the air, water, and land resources of the area as provided for by Article 12.070B(1) of the Land Development Code.

53.924 USE LIMITATIONS:

The following limitation and standards shall apply to all permitted and conditional uses:

A. Any permitted use that meets the following criteria shall require a conditional use permit:

    1. Any use expected to generate more than 30-truck-trailer or other heavy equipment trips per day to/from the property which is adjacent to or across from a residential dwelling, a lot in a platted subdivision, or a residential zone.

    2. Any use expected to generate more than 20 auto or truck trips during the busiest hour of the day to/from the premises.

    3. The use is expected to utilize arterial, collector, or other improved street/roads that pass through or are adjacent to residential lots, platted subdivisions, or residential zones.

B. Any use on a lot adjacent to/across from a residential dwelling, a lot in a platted residential subdivision, or a residential zone shall not emit odor, dust, fumes, glare, flashing lights, noise, or similar disturbances perceptible more than 200 feet in the direction of the affected residential use or lot.

C. No use shall be permitted to operate for business between the hours of 10 p.m. and 7a.m., if located adjacent to/across from residential dwellings, lots in platted residential subdivisions or residential zones, and resultant vehicle traffic passes though or is adjacent to residential lots in platted subdivisions or residential zones.

D. No use shall be permitted which has been declared a nuisance by state statute, county ordinance, or a court of competent jurisdiction.

53.925 PROPERTY DEVELOPMENT STANDARDS:

A. No parcel planned and zoned for industrial use as of November 15, 1990, shall be further partitioned except for a specific industrial use listed in Section 53.922 or Section 53.923. Verification is provided in the form of the following:

1. Construction drawings for the proposed facility; and
2. A letter of intent from a prospective company; and
3. The site shall be of sufficient size to accommodate an on-site sewage collection system and water system, unless such system can be accessed by easement or water is to be provided by a public provider, and;
4. Will not result in public health hazards or adverse environmental impacts that violate state or federal water quality regulations; and
5. Will meet water and sewer requirements.

A. Lot Size and Shape – See Article 61

B. Building heights and Setbacks – See Article 62, Light Industrial

C. Fences, Walls and Screening – See Article 64

D. Landscaping – See Article 65

E. Signs – See Article 66, Light Industrial

F. Parking – See Article 68, Light Industrial

G. Access – see Article 71

H. Building Size:

1. Uses listed above as Permitted Uses (53.922) and Conditional Uses (53.923) shall not exceed the 10,000 square-foot limit unless:

    a. The use is approved as a plan amendment under the provision of Article 47,48, and 49; and

    b. The use is limited pursuant to Article 59.8, Limited Use Overlay, to a size of building or buildings that is intended to serve the community, surrounding rural area, promote appropriate economic development, protect the existing character, and preserve or enhance the air, water, and land resources of the area.

2. A lawfully established use that existed prior to the adoption of this Article may expand to occupy 10,000 square feet of floor area within a building(s). If the use is determined to *"promote appropriate economic development, protect the existing character, and preserve or enhance the air, water, and land resources of the area,"* the floor area may be expanded to occupy a maximum of 10,000 square feet, *or* an additional 50% of the floor area currently occupied, whichever is greater.

ARTICLE 54
EXCLUSIVE FARM USE (EFU)

54.010 - PURPOSE

The purpose of the Exclusive Farm Use zones is to preserve and maintain agricultural lands for farm use and future needs for agricultural products, forests and open spaces; to conserve and protect scenic resources; to maintain and improve the quality of air, water and land resources of the County; and to establish criteria and standards for farm uses and related and supportive uses which are deemed appropriate.

The intent of these zone classifications is to provide the automatic farm use valuation for farms which qualify under the provisions of Oregon Revised Statutes, Chapter 308. Therefore, the Exclusive Farm Use zone is applied to those areas, which meet the definition of "agricultural land" in Oregon's Statewide Planning Goal 3.

Further, the Exclusive Farm Use zones are intended to guarantee the preservation and maintenance of those areas so classified for farm use, free from conflicting non-farm uses and influences. Each zone is subject to change only in those instances where there is substantial evidence that such land is no longer suitable for agriculture or that there has been a significant and substantial change in the land needs in the County which clearly demonstrates that such land is needed for uses other than agriculture. Such determination shall not be based on the difference in the value of the land.

The Exclusive Farm Use-Cropland zone is applied to agricultural areas characterized by row crop, hay and livestock production in which there is no predominant parcel size. The Exclusive Farm Use-Cropland/Grazing zone is applied to areas of mixed cropland and grazing activities or potential. The Exclusive Farm Use-Grazing zone is for areas of predominantly range and grazing uses.

It is not the purpose or intent of the Exclusive Farm Use designation to restrict accepted farm or agricultural use of land.

54.015 - DEFINITIONS

For the purposes of this article, the following definitions as defined in Article 11 shall apply:

A. Tract: one or more contiguous lots or parcels in the same ownership. Contiguous means connected in such a manner as to form a single block of land.

B. Date of creation and existence: When a lot, parcel or tract is reconfigured pursuant to applicable law after November 4, 1993, the effect of which is to qualify a lot, parcel or tract for the siting of a dwelling, the date of the reconfiguration is the date of creation or existence. Reconfiguration means any change in the boundary of the lot, parcel or tract.

C. Irrigated: means watered by an artificial or controlled means, such as sprinklers, furrows, ditches, or spreader dikes. An area or tract is "irrigated" if it is currently watered, or has established rights to use water for irrigation, including such tracts that receive water for irrigation from a water or irrigation district or other provider. For the purpose of this division, an area or tract within a water or irrigation district that was once irrigated shall continue to be considered “irrigated” even if the irrigated water was removed or transferred to another tract.

D. Agricultural Land: Lands classified by the U.S. Soil Conservation Service as predominantly (51% or more) Class I-VI soils; lands in other soil classifications that are suitable for farm use as defined in ORS 215.203(2)(a), taking into account soil fertility, suitability for grazing, climatic conditions, existing and future availability of water for farm irrigation purposes, existing land-use patterns, technological and energy inputs required, and accepted farming practices; land that is necessary to permit farm practices to be undertaken on adjacent or nearby agricultural lands. Agricultural land does not include land within acknowledged urban growth boundaries or within acknowledged exception areas for goals 3 and 4.

E. High-Value Farmland: land in a tract composed predominantly (51% or more) of soils that, at the time the dwelling is approved for the tract are:

1. Irrigated and classified prime, unique, Class I, or Class II; or

2. Not irrigated and classified prime, unique, Class I or Class II; or

3. Shown to have grown specified perennials as demonstrated by the most recent aerial photography of the Agricultural Stabilization and Conservation Service of the United States Department of Agriculture taken prior to November 4, 1993. For the purposes of this section, "specified perennials" means perennials grown for market or research purposes including, but not limited to, nursery stock, berries, fruits, nuts, Christmas trees or vineyards, but not including seed crops, hay, pasture, or alfalfa.

54.020 - PERMITTED USES

The following uses may be permitted subject to site plan review of Article 41, and all other applicable standards, criteria, rules, and statutes governing such uses:

A. Farm use.

B. The propagation or harvesting of a forest product.

C. Nonresidential buildings customarily provided in conjunction with farm use.

D. Operations for the exploration for and production of geothermal resources and oil and gas including the placement and operation of compressors, separators and other customary production equipment for an individual well adjacent to the wellhead. Any activities or construction relating to such operations shall not be a basis for an exception under ORS 197.732(1)(a) or (b).

E. Operations for the exploration for minerals. Any activities or construction relating to such operations shall not be a basis for an exception under ORS 197.732(1)(a) or (b).

F. Climbing and passing lanes within the right-of-way existing as of July 1, 1987.

G. Reconstruction or modification of public roads and highways, not including the addition of travel lanes, where no removal or displacement of buildings would occur, or no new land parcels would result.

H. Temporary public road and highway detours that will be abandoned and restored to original condition or use at such time as no longer needed.

I. Minor betterment of existing public road and highway related facilities such as maintenance yards, weigh stations and rest areas, within right-of-way existing as of July 1, 1987, and contiguous public-owned property utilized to support the operation and maintenance of public roads and highways.

J. A replacement dwelling to be used in conjunction with farm use if the existing dwelling meets the definition of historic as defined in ORS 358.480, and has been listed in the County historical resources inventory as an historic property.

K. Alteration, restoration, or replacement of lawfully established dwellings, provided such dwellings have intact exterior walls and roof structure, indoor plumbing consisting of a kitchen, sink, toilet and bathing facilities connected to a sanitary disposal system; interior wiring for interior lights; and a heating system. In the case of replacement, the original dwelling must be removed, demolished, or converted to an allowable non-residential use within three months of the completion of the replacement dwelling.

L. The creation, restoration or enhancement of wetlands.

M. Winery as described in ORS 215.452.

N. Destination Resorts that meet the criteria of and follow the review process established in Article 88 of this Code. Destination Resorts are limited to areas designated in the ordinance as appropriate for this purpose.

O. Farm stands, meaning structures designed and used for the sale of farm crops and/or livestock grown or raised on the farm operation and other farm operations in the local agricultural area, including the sale of retail incidental items and fee based activity to promote the sale of farm crops and/or livestock sold at the farm stand, if:

1. The sale of incidental items and fees from promotional activity does not exceed 25 percent of the total annual sales of the farm stand.

2. The farm stand does not include structures designed or used for occupancy as a residence or for activity other than described under 54.020 (O) and does not include structures for banquets, public gatherings or public entertainment.

P. Churches and cemeteries in conjunction with churches, consistent with ORS 215.441; & public or private schools, including all buildings essential to the operation of a school; provided that:

1. Existing facilities wholly within a farm use zone may be maintained, enhanced or expanded on the same tract, subject to other requirements of this code.

2. New development is limited to lots or parcels not determined to be high-value farmland.

3. These uses are subject to the Type II Administrative Review Procedure pursuant to Article 22.

Q. Fire service facilities providing rural fire protection services.

54.030 - CONDITIONAL USES

The following non-farm uses may be established subject to the criteria within each subsection in addition to the general criteria listed in Section 54.040 and the provisions of Article 44:

A. Agricultural Packing and Processing.

B. Agricultural Supplies and Services.

C. Stockyards and Animal Sales.

D. Agricultural Waste Processing.

E. Operations conducted for the mining and processing of geothermal resources and oil and gas not otherwise permitted under Section 54.020.

F. Operations conducted for the mining, crushing or stockpiling of aggregate and

other mineral and subsurface resource sites inventoried in the Comprehensive Plan in excess of 1,000 cubic yards of material or where the surface area of the site is more than 1 acre.

G. Operations conducted for processing of aggregate into asphalt or Portland cement not within two miles of a planted vineyard, defined as one or more vineyards totaling at least 40 acres that are planted as of the date the application for batching and blending is filed.

H. Operations conducted for processing other mineral resources and other subsurface resources.

I. Private parks, hunting and fishing preserves, and campgrounds. For the purposes of this Article, Campground shall mean an area devoted to overnight temporary use for vacation, recreational or emergency purposes. A camping site may be occupied by a tent, travel trailer or recreational vehicle. Campgrounds authorized by this rule shall not include intensively developed recreational uses such as swimming pools, tennis courts, retail stores, or gas stations. Existing facilities may be maintained, enhanced, or expanded, provided they comply with other requirements of this code. New development of this type is limited to lots or parcels not determined to be high-value farmland.

J. Parks and playgrounds.

K. Regulation Golf courses, as defined in OAR 660-33-130(20). Existing golf courses may be expanded provided they comply with the standards set forth in OAR 660-33-130(20), and meet additional criteria stipulated in OAR 660-33-130(5). New golf courses are limited to parcels not determined to be high-value farmland. Note that executive golf courses, par-3 golf courses, pitch and putt golf courses, miniature golf courses, and driving ranges do not qualify as regulation golf courses and are not allowed in EFU zones.

L. Accessory uses to regulation golf courses such as: parking, maintenance buildings, cart storage, practice range, clubhouse, restrooms, lockers and showers, food and beverage service, pro shop, a practice course as part of a larger golf course.

    1. Accessory uses shall be limited to a size, and oriented in a manner, necessary to serve the needs of persons and their guests who patronize the golf course to golf.

    2. An accessory use that provides commercial services shall be located in the clubhouse rather than in a separate building.

M. Commercial utility facilities for the purpose of generating power for public sale. If the commercial utility facilities take more than 20 acres out of commercial agricultural production on land not designated high-value farmland, or 12 acres on land that is determined to be high-value farmland, an exception must be

taken pursuant to OAR 660-04.

N. Transmission towers over 200 feet in height.

O. Utility facilities necessary for public service, and which must be situated in an agricultural zone in order for that service to be provided.

P. Personal use airports for airplanes and helicopter pads, including associated hanger, maintenance and service facilities.

Q. Temporary facilities for the primary processing consistent with ORS 215.283(2)(i) of forest products grown on or adjacent to the parcel where the facility is sited. The permit is valid for one year and is renewable.

R. A solid waste disposal site for which a permit has been granted under ORS 459.245 by the Oregon Department of Environmental Quality together with equipment, facilities or buildings necessary for its operation. New development of this type is limited to lots or parcels not determined to be high-value farmland.

S. Kennel. Existing facilities may be maintained, enhanced, or expanded, provided they comply with other requirements of this code. New development of this type is limited to lots or parcels not determined to be high-value farmland.

T. The propagation, cultivation, maintenance and harvesting of aquatic species.

U. Construction of additional passing and travel lanes requiring the acquisition of right-of-way but not resulting in the creation of new land parcels.

V. Reconstruction or modification of public roads and highways involving the removal or displacement of buildings but not resulting in the creation of new land parcels.

W. Improvement of public road and highway-related facilities, such as maintenance yards, weigh stations and rest area, where additional property or right-of-way is required but not resulting in the creation of new land parcels.

X. Home Occupations as allowed under Article 85 of this code. In addition to Article 85, the following criteria apply to home occupations in EFU zones: 1) a home occupation may be authorized in an existing dwelling and structures accessory to an existing dwelling; 2) they may not be authorized in structures accessory to resource use; 3) a home occupation located on high-value farmland may employ only residents of the home.

Y. Residential Care Home in an existing dwelling.

Z. Guest Ranches (See Section 54.035)

Aa. Community centers owned by a government agency or a nonprofit organization and operated primarily by and for residents of the local rural community.

Bb.Transportation improvements on rural lands allowed by OAR 660-012-0065.

54.035 – CRITERIA FOR GUEST RANCHES

A. A guest ranch as defined in Section 11.030 may be established in conjunction with an existing and continuing agricultural operation, using accepted agricultural livestock practices, that qualifies as a farm use under ORS 215.203 in any area zoned for exclusive farm use if the following conditions are met:

1. Except as provided in 54.035(A)(4), the lodge, bunkhouses and/or cottages cumulatively shall include not less than four nor more than ten overnight guest rooms exclusive of kitchen areas, rest rooms, storage and other shared indoor facilities and not exceed a total of 12,000 square feet in floor area.

2. The guest ranch shall be located on a lawfully created parcel that is at least 160 acres in size, the parcel containing the dwelling of the person conducting the livestock operation, and not classified as high-value farmland as defined in ORS 215.710.

3. The guest ranch may be sited on any portion of a lot or parcel, if the majority of that lot or parcel is more than 10 air miles from an urban growth boundary containing a population greater than 5000.

4. For each additional 160 acres above the minimum 160 acres needed to establish a guest ranch as described in 54.035(A)(1), up to five additional overnight guest rooms and 3,000 square feet of floor area may be added to the guest ranch for a total of not more than 25 guest rooms and 21,000 square feet of floor area.

B. A guest ranch may provide recreational activities that can be provided in conjunction with the livestock operation's natural setting, including but not limited to hunting, fishing, hiking, biking, horseback riding, camping or swimming. However, activities that require significant development such as campgrounds and golf courses shall not be allowed. A guest ranch shall not be allowed in conjunction with an existing golf course under ORS 215.283(2)(f) or an existing campground under ORS 215.283(2)(c).

C. Food services shall be incidental to the operation of the guest ranch. Food services shall be provided only for the guests of the guest ranch and the costs for meals provided shall be included as part of the fee to visit or stay at the guest ranch. The sale of individual meals to persons who are not guests of the guest ranch shall not be allowed.

D. Approval of a guest ranch shall be subject to the provisions of ORS 215.296 (1) and (2).

54.040 - CONDITIONAL USE CRITERIA

Applications for a conditional use permit in an Exclusive Farm Use zone shall be reviewed against the following criteria in place of those enumerated in Section 44.030:

A. The proposed use will not create conditions or circumstances that the County determines would be contrary to the purposes or intent of its acknowledged comprehensive plan, its policies or land use regulations; and

B. The proposed use is in conformance with all standards and criteria of this Code, notably Article 57;

C. The location, size, design, and operating characteristics of the proposed use will not force a significant change in, or significantly increase the cost of, accepted farm or forestry practices on nearby agricultural or forest lands;

D. A written statement will be recorded with the deed which recognizes the rights of adjacent and nearby land owners to conduct farm or forest operations consistent with accepted farming practices and the Forest Practices Act, ORS 30.090 and Rules for uses authorized by this Code.

E. The proposed use will not significantly increase fire hazards or significantly increase fire suppression costs or significantly increase risks to fire suppression personnel;

F. The use complies with other conditions as the review authority considers necessary.

54.050 - GENERAL REVIEW CRITERIA FOR EFU ZONE DWELLINGS

All of the following conditions must be satisfied for dwelling applications in Exclusive Farm Use zones to be approved:

A. The lot or parcel upon which the dwelling will be placed was legally created; and

B. The proposed dwelling site can obtain approval for on-site sewage disposal, will be adequately served by road access, water, utilities, and fire protection (will not cause these facilities or services provided to the area to exceed existing capacities); and

C. Approval of the dwelling will not create conditions or circumstances that the County determines would be contrary to the purposes or intent of its acknowledged comprehensive plan or land use regulations; and

D. The dwelling and its placement are in conformance with all required standards and criteria of County code; and

E. Approval of the dwelling will not materially alter the stability of the overall land use pattern in the area when considering the cumulative impact of dwellings on

other lots or parcels in the area; and

F. The dwelling and accessory structures are sited on the parcel such that the building site selected will minimize impact to nearby farm and forest lands and operations; and

G. Before final planning approval can be granted, the Planning Director or his/her designee shall check the Division of State Lands' most current wetlands inventory maps, and determine if the site proposed for development may have a wetland located on it. If it is determined that a DSL-recognized wetland may be located on a site proposed for development, the Planning Director or his/her designee shall notify the Division of State Lands. A copy of this letter shall be sent to the applicant. DSL has 30 days to comment, beginning on the day notification is sent. A final decision on the application cannot be rendered until the 30-day comment period has expired.

H. The use complies with other conditions as the review authority considers necessary.

54.060 - FARM DWELLINGS

A. REVIEW PROCESS Review of applications for farm dwelling permits shall be subject to the Type II Administrative Review procedure and the site plan review of Article 41, and all other applicable standards, criteria, rules, and statutes governing dwelling placement.

B. REVIEW CRITERIA All applications for farm dwellings will be reviewed according to the criteria enumerated in 54.050, as well as the following criteria. At the time an application is made for a farm dwelling building permit, the applicant shall provide documentation showing that the dwelling is in conjunction with farm use of the property. A dwelling is considered to be customarily provided in conjunction with farm use and satisfies the requirements of this section when all of the following conditions (1 through 5) are met:

1. Except if the farm passes the capability test (see 54.060(B)(5)(c), the parcel upon which dwelling will be placed meets the minimum lot size in the applicable zone, as follows:

   EFU-C - The parcel is at least 80 acres in size;
   EFU-CG - The parcel is at least 80 acres in size; or
   EFU-G - The parcel is at least 160 acres in size.

2. The parcel is currently employed for farm use as defined in ORS 215.203.

3. Except for accessory farm dwellings under part C of this section, there is no other dwelling on lands designated for exclusive farm use pursuant to ORS Chapter 215 or for mixed farm/forest use pursuant to OAR 660-006-057 owned by the farm or ranch operator or on the farm or ranch operation.

4. The dwelling will be occupied by a person or persons who will be principally engaged in the farm use of the land at a commercial scale, and in the case of item (5) below, produced the commodities which earned the income necessary to meet the relevant requirement.

5. The tract in which the parcel is located passes one of the following tests. Income information should be presented to the Planning Department by way of Federal Income Tax Schedule F.

    a. SIZE TEST. A farm passes the size test if the tract on which the farm is located is at least 160 acres and not designated rangeland, or 320 acres and designated rangeland, and *is not* high-value farmland.

    b. INCOME TEST. A farm passes the income test if either (1-2):

        1) The tract which includes the farm *is not* high-value farmland, and the farm produced in the last two years or three of the last five years at least $40,000 in gross annual income from the sale of farm products. In determining gross income, the cost of purchased livestock shall be deducted from the total gross income attributed to the farm or ranch operation.

        2) The tract which includes the farm *is* high-value farmland, and the farm produced in the last two years or three of the last five years at least $80,000 of gross annual income from the sale of farm products. In determining gross income, the cost of purchased livestock shall be deducted from the total gross income attributed to the farm or ranch operation.

        3) The following (i-ii) apply to both 1& 2 (income test for high value and non-high value farm land) of this subsection:

            i) Only gross income from land owned, not leased or rented, shall be counted. Gross income earned from a lot or parcel which has been used previously to qualify another lot or parcel for the construction or siting of a primary farm dwelling shall not be used. In determining income requirements, lots or parcels zoned for farm use in the same county and contiguous counties may be used.

            ii) Pursuant to OAR 660-033-0135, for all contiguous and non-contiguous lots or parcels used to comply with the gross farm income requirements, the covenants, conditions & restrictions form adopted as “FMD Exhibit A” must be recorded with the county clerk of the county or counties those lots/parcels are located in. This must be done prior to the final approval of the farm dwelling.

c. CAPABILITY TEST.

A farm passes the capability test if all of the following criteria (1 through 5) are met:

1) **SOILS** The tract on which the farm is located *is not* high value farmland; and

2) **FARM SIZE** The subject tract which includes the farm is at least as large as the median size of those commercial farm or ranch tracts capable of generating at least $10,000 in annual gross sales that are located within a study area which includes all tracts wholly or partially within one mile from the perimeter of the subject tract (see below for method of computing annual gross sales capability); and

3) **CAPABILITY** The subject tract is capable of producing at least the median level of annual gross sales of county indicator crops (defined below) as the same commercial farm or ranch tracts included in the study area described immediately above; and

4) **USE** The subject tract is employed in a farm use at a scale capable of producing the equivalent of the median level of annual gross sales of county indicator crops; and

   a) If at time of application farm use is of insufficient scale to meet these requirements, approval may be given subject to a condition that no building permit may be issued prior to the establishment of farm use at the required scale.

5) **LOT SIZE** The specific subject lot or parcel on which the dwelling is proposed is not less than 20 acres.

6) Annual gross sales capability for a single tract shall be computed by first determining the land classes present on the tract and their acreage (obtained from the county assessor); next multiplying the number of acres in each land class in the tract by the gross sales per acre for the land class (this data provided by the county) and subsequently adding them together.

C. ACCESSORY FARM DWELLINGS - accessory dwelling(s) for a farm operator's relative, as defined by ORS 215.283(1)(e), or farm help may be allowed if the primary farm dwelling meets the criteria in 54.050 and 54.060(B)(1)-(4), and the accessory dwelling meets the following criteria:

1. The accessory farm dwelling will be occupied by a person or persons who will be principally engaged in the farm use of the land, and whose seasonal or year-round assistance in the management of the farm (e.g. planting, harvesting, marketing or caring for livestock) and consequent residence on

the property is or will be required by the farm operator (the farm operator is the person who does the work and makes the day to day decisions).

2. There is no other dwelling on lands designated for exclusive farm use owned by the farm operator, that is vacant or currently occupied by persons not working on the subject farm or ranch, and that could reasonably be used as an accessory farm dwelling.

3. The proposed accessory dwelling will be located either:

   a. On the same parcel as the primary farm dwelling (i.e. the farm operator's dwelling); or

   b. On the same tract as the primary farm dwelling when the lot or parcel on which the accessory farm dwelling will be sited is consolidated into a single parcel with all other contiguous lots and parcels in the tract; or

   c. On a lot or parcel in the same tract, but other than the lot or parcel on which the primary farm dwelling is located, when the accessory farm dwelling is limited to only a manufactured dwelling with a deed restriction. The deed restriction shall be filed with the County Clerk and require the manufactured dwelling to be removed when the lot or parcel is conveyed to another party. The manufactured dwelling may remain if it is re-approved under these rules.

4. Except as provided in part 6 of this subsection, the tract on which the accessory farm dwelling and primary farm dwelling are to be located passes the income test as described in 54.060(B)(5)(b).

5. The lot or parcel which the accessory farm dwelling will be placed shall be at least 20 acres in size.

6. An accessory farm dwelling for a farm operator's relative, shall be reviewed according to the Type I review procedure and does not need to meet the income test described in part 4 of this subsection.

54.070 - NON-FARM DWELLINGS

A. REVIEW PROCESS Review of applications for a dwelling not in conjunction with farm use shall be processed consistent with Article 44 and reviewed according to the Hearings Officer Review procedure (Article 24).

B. REVIEW CRITERIA All applications for non-farm dwellings will be reviewed against the criteria enumerated in 54.050 as well as the following criteria (1 through 8), and may be approved only if all criteria are met (the applicant for the non-farm dwelling shall provide documentation showing the proposed dwelling meets the review criteria):

1. The proposed dwelling and activities associated with the dwelling will not force a significant change in or significantly increase the cost of accepted farming or forest practices on nearby lands devoted to farm or forest use;

2. The proposed dwelling shall be situated upon a lot or parcel or a portion of a lot or parcel that is generally unsuitable land for the production of farm crops and livestock, or merchantable tree species, considering the terrain, adverse soil or land conditions, drainage and flooding, vegetation, location, and size of the tract.

   A lot or parcel or portion of a lot or parcel shall not be considered unsuitable solely because of its size or location if it can reasonably be put to farm or forest use in conjunction with other land. If it can be sold, leased, rented or otherwise managed as a part of commercial farm or ranch it is not "generally unsuitable." A lot or parcel is presumed suitable if it is composed predominantly of Class I-VI soils.

3. The dwelling is compatible with farm uses, does not seriously interfere with accepted farming practices on nearby lands devoted to agricultural use (as defined in ORS 215.203(2)), and is consistent with state agricultural land-use policy (set forth in ORS 215.243), which is designed to conserve agricultural lands;

4. The dwelling will be sited on a lot or parcel created before January 1, 1993; or the lot or parcel was created after January 1, 1993 pursuant to the procedure for land partitions in EFU zones established in ORS 215.263(5);

5. The dwelling does not materially alter the stability of the overall land use pattern of the area when considering the cumulative impact of non-farm dwellings on other lots or parcels in the area;

6. If the parcel is under forest assessment:

   a. A lot or parcel or portion of a lot or parcel shall not be considered unsuitable solely because it is too small to be managed for forest production profitably by itself. If a lot or parcel under forest assessment can be sold, leased, rented or otherwise managed as a part of a forestry operation it is not "generally unsuitable." A lot or parcel is presumed suitable if it is composed predominantly of soils capable of producing 20 cubic feet of wood fiber per acre per year.

   b. The proposed dwelling must be compatible with, and must not seriously interfere with, forest practices as described in ORS 527.620(6); and

   c. The proposed dwelling must not force a significant change in forest practices or significantly increase the cost of those practices on the surrounding land.

7. The dwelling complies with such other conditions as the governing body or its designate considers necessary.

C. APPROVAL CONDITIONS - Before final Planning Department approval can be granted, the applicant shall:

1. Demonstrate removal of tax deferral. Before a building permit is issued, the owner/applicant shall produce written evidence from the County Assessor's Office that the lot or parcel upon which the dwelling is proposed has been disqualified for special assessment at value for farm use and that any additional tax or penalty imposed by the County Assessor as a result of disqualification has been paid. ORS 215.213, 215.236, 215.263. ORS 308A.050 to 308A.128. ORS 308A.315, 321.257 to 321.390, 321.730 or 321.815.

2. Record a written statement with the deed which recognizes the rights of adjacent and nearby land owners to conduct farm and forest operations consistent with accepted farm practices and the Oregon Forest Practices Act (see ORS 30.930 and ORS 93.040), and provide evidence to the Planning Department of such action.

54.080 - LOT OF RECORD DWELLINGS IN EFU ZONES

A. REVIEW PROCESS - Review of applications for Lot of Record Dwelling permits shall be processed consistent with Article 44 and reviewed according to the Hearings Officer Review procedure (Article 24), a site plan review (Article 41), and all other applicable standards, criteria, rules, and statutes governing dwelling placement.

B. REVIEW CRITERIA - In addition to those enumerated in 54.050, all applications for lot of record dwellings will be reviewed against the following criteria—The County may allow the establishment of a single-family dwelling on a lot or parcel in an Exclusive Farm Use zone if the County finds that:

1. The lot or parcel upon which the dwelling will be placed was legally created before January 1, 1985; and

2. The lot or parcel was acquired by the present owner prior to January 1, 1985, or was acquired by the present owner by devise or by intestate succession from a person who acquired the lot or parcel prior to January 1, 1985. For the purposes of Lot of Record Dwellings, "owner" includes the wife, husband, son, daughter, mother, father, brother, brother-in-law, sister, sister-in-law, son-in-law, daughter-in-law, mother-in-law, father-in-law, aunt, uncle, niece, nephew, stepparent, stepchild, grandparent or grandchild of the owner or a business entity owned by any one or combination of these family members; and

3. The tract on which the proposed dwelling will be sited does not already contain a dwelling; and

4. The lot or parcel on which the dwelling will be sited *is not* high-value farm land.

C. LOT OF RECORD DWELLINGS ON HIGH-VALUE FARMLAND - The County may allow the establishment of a single-family dwelling not in conjunction with farm use on high-value farmland if, in addition to meeting the requirements of LDC 54.080(A) and 54.080(B), the County finds that:

1. The lot or parcel is high-value farmland; and

2. A hearings officer of the Oregon Department of Agriculture, under the provisions of ORS 183.413 to 183.497 determines that:

   a. The lot or parcel cannot practicably be managed for farm use, by itself or in conjunction with other land, due to extraordinary circumstances inherent in the land or its physical setting that do not apply generally to other land in the vicinity; and

   b. The dwelling will comply with the provisions of ORS 215.296(1); and

   c. The dwelling will not materially alter the stability of the overall land use pattern in the area.

D. APPROVAL CONDITIONS - Before final Planning Department approval can be granted, the following conditions must be met:

1. Demonstrate removal of tax deferral. Before a building permit is issued, the owner/applicant shall produce written evidence from the County Assessor's Office that the lot or parcel upon which the dwelling is proposed has been disqualified for special assessment at value for farm use and that any additional tax or penalty imposed by the County Assessor as a result of disqualification has been paid. ORS 215.213, 215.236, 215.263. ORS 308A.050 to 308A.128. ORS 308A.315, 321.257 to 321.390, 321.730 or 321.815.

2. The applicant shall record a written statement with the deed which recognizes the rights of adjacent and nearby land owners to conduct farm and forest operations consistent with accepted farm practices and the Oregon Forest Practices Act (see ORS 30.930 and ORS 93.040), and provide evidence to the Planning Department of such action.

3. If the lot or parcel on which the proposed dwelling will be sited is part of a tract, the remaining lots or parcels in the tract are consolidated into a single lot or parcel;

4. If the lot or parcel on which the dwelling will be sited lies within an area designated in the acknowledged comprehensive plan as habitat of big game, the siting of the dwelling is made consistent with limitations on density upon which the acknowledged comprehensive plan and land use regulations intended to protect the habitat are based.

54.090 - LAND DIVISIONS IN EFU ZONES

Land divisions shall be processed and reviewed consistent with Articles 45 and 46. Use must be established along with parcel creation. In addition to review criteria contained in Section 45.040 the following criteria shall apply:

A. Agricultural divisions
   1. Parcel size:
      a. EFU-C Parcels are at least 80 acres in size.
      b. EFU-CG Parcels are at least 80 acres in size.
      c. EFU-G Parcels are at least 160 acres in size.

   2. The parcels are of sufficient size and configuration such that they are efficient for agricultural use employing accepted farming practices;

   3. The land division will not materially alter the stability of the overall land use pattern in the area.

B. Non-agricultural divisions for *non-farm uses*
   Creation of parcels less than the minimum size shall be non-agricultural divisions.
   1. A land division for any use enumerated in section 54.030 may be approved provided that the proposed parcel is not larger than the minimum size necessary to accommodate the proposed use, and the parcels are designed to utilize land generally unsuitable for the production of crops or livestock.

C. Non-agricultural divisions for *non-farm dwellings*
   Creation of parcels less than the minimum size shall be non-agricultural divisions.
   1. A parcel zoned EFU, larger than the minimum lot size established by Section 54.090, may be divided to create up to two new parcels smaller than the minimum lot size, each to contain a dwelling not provided in conjunction with farm use if:

      a. The non-farm dwellings have been approved under Section 54.070;

      b. The parcel to be divided was lawfully created prior to July 1, 2001;

      c. The remainder of the lot or parcel that does not contain the non-farm dwellings still complies with the minimum lot size under Section 54.090, after the division; and

d. The parcels for the non-farm dwellings are generally unsuitable for the production of farm crops and livestock or merchantable tree species considering the terrain, adverse soil or land conditions, drainage or flooding, vegetation, location and size of the tract. A parcel may not be considered unsuitable based solely on size or location if the parcel can reasonably be put to farm or forest use in conjunction with other land.

2. A parcel zoned EFU, equal to or less than the minimum lot size established by Section 54.090, but at least 40 acres in size, may be divided into two parcels, each to contain a dwelling not provided in conjunction with farm use if:

   a. The non-farm dwellings have been approved under Section 54.070;

   b. The parcel to be divided was lawfully created prior to July 1, 2001;

   c. The parcels for the non-farm dwellings are not capable of producing more than at least 20 cubic feet per acre per year of wood fiber; and are either composed of at least 90 percent Class VII & VIII soils, or composed of at least 90 percent Class VI through VIII soils and are not capable of producing adequate herbaceous forage for grazing livestock;

   d. The parcels for the non-farm dwellings do not have established water rights for irrigation; and

   e. The parcels for the non-farm dwellings are generally unsuitable for the production of farm crops and livestock or merchantable tree species considering the terrain, adverse soil or land conditions, drainage or flooding, vegetation, location and size of the tract. A parcel may not be considered unsuitable based solely on size or location if the parcel can reasonably be put to farm or forest use in conjunction with other land.

54.100 - PROPERTY DEVELOPMENT STANDARDS

A. Minimum Parcel Size
   1. Exclusive Farm Use-Cropland (EFU-C) - 80 acres.

   2. Exclusive Farm Use-Cropland/Grazing (EFU-CG) - 80 acres.

   3. Exclusive Farm Use-Grazing (EFU-G) - 160 acres.

B. Building Heights and Setbacks - See Article 62

C. Fences, Walls and Screening - See Article 64

D. Landscaping - See Article 65

E. Signs - See Article 66

F. Parking - See Article 68

G. Access - See Article 71

ARTICLE 55
FORESTRY (F)

55.010 - PURPOSE

The purpose of this zone is to protect forest ecosystems, and to safeguard those sectors of the economy dependent upon forest ecosystems, by conserving the forested land base and forest resources, and by allowing for environmentally sound and economically efficient forest practices. At the same time, Forest zone regulations are aimed at providing opportunities for human habitation, recreation and agricultural uses, consistent with the sound management of soil, air, water, vegetation, fish and wildlife that ensures the continued vitality of the ecosystem, and that does not unnecessarily hinder forest practices.

Oregon Statewide Planning Goal 4 requires that forest land be conserved. Forest lands are conserved by adopting and applying comprehensive plan provisions and zoning regulations consistent with the goal and OAR 660-06. The intent of OAR 660-06 is to allow, in addition to forest practices and operations and uses auxiliary to forest practices, uses related to and in support of forest operations; uses to conserve resources and to provide for habitat, agriculture, and recreation; locationally dependent uses; and dwellings, under certain conditions.

55.020 - OUTRIGHT USES

The following uses shall be allowed pursuant to the Oregon Forest Practices Act:

A. Forest operations, defined as any commercial activity relating to the growing or harvesting of any forest tree species as defined in ORS 527.620(6), including, but not limited to, reforestation of forest land, road construction and maintenance, harvest of a forest tree species, application of chemicals, and disposal of slash where such uses pertain to commercial forest activity;

B. Temporary on-site structures and physical alterations to the land that are auxiliary to and used during the term of a particular forest operation or practice. Alterations include but are not limited to those made for the purposes of mineral exploration, mining, gravel extraction and processing, landfills, dams, reservoirs, road construction or recreational facilities;

C. For the purposes of this subsection, "auxiliary" means a use or alteration of a structure or land which provides help or is directly associated with the conduct of a particular forest practice. An auxiliary structure is located on site, is temporary in nature, and is not designed to remain for the forest's entire growth cycle. An auxiliary use is removed when a particular forest practice has concluded.

D. Uses to conserve soil, air and water quality, and to provide for vegetation, fish and wildlife resources;

E. Farm use as defined in ORS 215.203.

F. Local distribution lines (e.g. electric, telephone, natural gas) and accessory equipment (e.g. electric distribution transformers, poles, meter cabinets, terminal boxes, pedestals) or equipment that provides service hookups, including water hookups.

G. Exploration for mineral and aggregate resources as defined in ORS Chapter 517.

H. Water intake facilities, canals, and water distribution lines for farm irrigation and ponds.

55.030 - PERMITTED USES

The following uses are permitted subject to site plan review of Article 41, and all other applicable standards, criteria, rules and statutes governing such uses:

A. Temporary portable facilities for the primary processing of forest products;

B. Towers and fire stations for forest fire protection;

C. Caretaker residences for public parks and public fish hatcheries;

D. Uninhabitable structures accessory to fish and wildlife management;

E. Temporary forest labor camps;

F. Alteration, restoration, or replacement of lawfully established dwellings, provided such dwellings have intact exterior walls and roof structure; indoor plumbing consisting of a kitchen, sink, toilet and bathing facilities connected to a sanitary disposal system; interior wiring for interior lights; and a heating system. In the case of replacement, the original dwelling must be removed, demolished, or converted to an allowable non-residential use within three months of the completion of the replacement dwelling.

G. Widening of public roads within existing rights-of-way in conformance with the transportation element of the County Comprehensive Plan, including public road and highway projects as described in ORS 215.213(1)(m)-(p) and 215.283(1)(k)-(n).

H. Destination Resorts that meet the criteria of and follow the review process established in Article 88 of this Code. Destination Resorts are limited to areas designated in the ordinance as appropriate for this purpose.

I. Exploration for, and production of geothermal, gas, oil, and other associated hydrocarbons, including the placement and operation of compressors, separators and other customary production equipment for an individual well adjacent to the well head.

55.040 - CONDITIONAL USES

The following uses may be established subject to the criteria in Section 55.050 and the provisions of Article 44:

A. Permanent facilities for the primary processing of forest products;

B. Permanent facilities for logging equipment repair and storage;

C. Log scaling and weigh stations;

D. A solid waste disposal site approved by the governing body of a city or county or both for which the Oregon Department of Environmental Quality has granted a permit under ORS 459.245, together with equipment, facilities or buildings necessary for its operation;

E. Private parks and campgrounds. Campgrounds in private parks shall only be those allowed by this subsection. Except on a lot or parcel contiguous to a lake or reservoir, campgrounds shall not be allowed within three miles of an urban growth boundary unless an exception is approved pursuant to ORS 197.732 and OAR Chapter 660 Division 4. For the purposes of this Article a campground is an area devoted to overnight temporary use for vacation, recreation or emergency purposes but is not for residential purposes and is established on a site or is contiguous to lands with a park or other outdoor natural amenity that is accessible for recreation use by occupants of the campground. A campground shall be designed and integrated into the rural agriculture and forest environment in a manner that protects the natural amenities of the site and provides buffers of existing native trees and vegetation or other natural features between campsites. Campsites may be occupied by a tent, travel trailer or recreational vehicle. Separate sewer, water, or electric service hookups shall not be provided to individual campsites. Campgrounds authorized by this rule shall not include intensively developed recreational uses such as swimming pools, tennis courts, retail stores or gas stations. Overnight temporary use in the same campground by a camper or camper's vehicle shall not exceed a total of 30 days during any consecutive 6 month period.

F. Mining and processing of oil, gas or other subsurface resources as defined in ORS Chapter 520 and not otherwise permitted in Section 55.030(G) (such as compressors, separators, and storage serving multiple wells), and mining and processing of aggregate and mineral resources as defined in ORS Chapter 517;

G. Television, microwave and radio communication facilities and transmission towers;

H. Fire stations for rural fire protection;

I. Utility facilities for the purpose of generating power. A power generation facility shall not preclude more than 10 acres from use as a commercial forest operation unless an exception is taken pursuant to OAR 660, Division 4;

J. Aids to navigation and aviation;

K. Water intake facilities, related treatment facilities, pumping stations, and distribution lines;

L. Reservoirs and water impoundments;

M. Firearms training facility;

N. Cemeteries;

O. Private, seasonal accommodations for fee hunting and fishing where:

1. Accommodations are limited to no more than 15 guest rooms as that term is defined in the Oregon Structural Specialty Code; and

2. Only minor incidental and accessory retail sales are permitted; and

1. Accommodations are occupied temporarily for the purpose of hunting during game bird and big game hunting seasons authorized by the Oregon Department of Fish and Wildlife Commission; or

4. Accommodations are occupied temporarily for the purpose of fishing during fishing seasons authorized by the Oregon Fish and Wildlife Commission and are located within 1/4 mile of fish bearing Class I waters; and

5. The County may impose other appropriate conditions.

P. New electric transmission lines with rights-of-way 100 feet or less in width as specified in ORS 772.210.

Q. New distribution lines for gas, oil, or geothermal with rights-of-way 50 feet or less in width;

R. Temporary asphalt and concrete plants as accessory uses to specific highway projects;

S. Home occupations as allowed under Article 85 of this Code;

T. A manufactured dwelling in conjunction with an existing dwelling as a temporary use for the term of a hardship suffered by the existing resident or a relative as defined in ORS 215.213 and 215.283. The manufactured dwelling shall use the same subsurface sewage disposal system used by the existing dwelling, and that disposal system must be adequate to accommodate the additional dwelling. If the mobile home will use a public sanitary sewer system, such condition will not be required. Within three months of the end of the hardship, the manufactured dwelling shall be removed or demolished or, in the case of an existing building, the building shall be removed, demolished or returned to a

non-residential use. A temporary residence approved under this subsection is not eligible for replacement. The temporary use permit shall be reviewed yearly as required by LDC Article 42. When the hardship ends, the manufactured dwelling shall be removed. Oregon Department of Environmental Quality review and removal requirements shall also apply to such manufactured dwellings.

U. Expansion of existing airports;

V. Public road and highway projects as described in ORS 215.213(2)(q)-(s) and 215.283(2)(p)-(r);

W. Forest management research and experimentation facilities as defined by ORS 526.215 or where accessory to forest operations.

X. Youth Camps (See Section 55.095)

55.050 - CONDITIONAL USE CRITERIA

Applications for a conditional use permit in the Forestry zone shall be reviewed against the following criteria in place of those enumerated in Section 44.030:

A. The proposed use will not create conditions or circumstances that the County determines would be contrary to the purposes or intent of its acknowledged comprehensive plan, its policies or land use regulations; and

B. The proposed use is in conformance with all standards and criteria of this Code, notably Article 57;

C. The location, size, design, and operating characteristics of the proposed use will not force a significant change in, or significantly increase the cost of, accepted farm or forestry practices on nearby agricultural or forest lands;

D. A written covenant will be recorded with the deed which recognizes the rights of adjacent and nearby land owners to conduct farm and forest operations consistent with accepted farming practices and the Forest Practices Act, ORS 30.090 and Rules for uses authorized by this Code.

E. The proposed use will not significantly increase fire hazards or significantly increase fire suppression costs or significantly increase risks to fire suppression personnel;

F. The use complies with other conditions as the review authority considers necessary.

55.060 - GENERAL REVIEW CRITERIA FOR FOREST ZONE DWELLINGS

All of the following conditions must be satisfied for dwelling applications in Forest zones to be approved:

A. The lot or parcel upon which the dwelling will be placed was legally created; and

B. The tract on which the proposed dwelling will be sited does not contain a dwelling and no other dwelling has been approved for other lots or parcels in the tract, and no deed restrictions exist on any parcels in the tract that preclude said parcel from development or from being used to total the required acreage. Large ownership dwellings as set forth in 55.090 are excluded from this requirement. A tract is defined as one or more contiguous lots or parcels in the same ownership. Contiguous means connected in such a manner as to form a single block of land; and

C. Approval of the dwelling will not exceed the facilities and service capabilities of the area. The proposed dwelling site:

1. shall obtain approval for on-site sewage disposal and

2. will be adequately served by road access. Roads must meet the fire protection standards of Article 69. In addition, if road access to the proposed dwelling is by a road owned and maintained by a private party or by the Oregon Department of Forestry, the U.S. Bureau of Land Management, or the U.S. Forest Service, then the applicant shall provide proof of a long-term road access use permit or agreement. The road use permit may require the applicant to agree to accept responsibility for road maintenance; and

3. shall be developed pursuant to the siting and development standards of LDC Article 69, Rural/Wildland Fire Safety Standards, and the parcel upon which the proposed dwelling is to be located shall be within a rural fire protection district or the proposed resident must prove proof of a contract for residential fire protection; and

4. must be served by a domestic water supply from a source authorized by the state Water Resources Department, and not from a Class II stream as designated in the Forest Practices Rules (OAR Chapter 629). The applicant shall provide proof to the Planning Department that this requirement can be met. Evidence of domestic water supply may consist of:

   a. verification from a water purveyor that the use described in the application will be served by the purveyor under the purveyor's rights to appropriate water; or

   b. a water use permit issued by the Water Resources Department for the use described in the application; or

   c. verification from the Water Resources Department that a water use permit is not required for the use described in the application.

d. if the proposed water supply is from a well and is exempt from permitting requirements under ORS 537.545, the applicant shall submit the well constructor's report to the county upon completion of the well.

D. Approval of the dwelling will not create conditions or circumstances that the County determines would be contrary to the purposes or intent of its acknowledged comprehensive plan or land use regulations; and

E. The dwelling and its placement are in conformance with all required standards and criteria of County code; and

F. Approval of the dwelling will not materially alter the stability of the overall land use pattern in the area when considering the cumulative impact of dwellings on other lots or parcels in the area; and

G. SITING REQUIREMENTS - The dwelling and accessory structures are sited on the parcel such that the building site selected will substantially satisfy each of the following criteria:

1. Have the least impact on nearby or adjoining forest or farm lands; and

2. Ensure that adverse impacts on forest operations and accepted farming practices on the tract will be minimized; and

3. Minimize the amount of forest lands used to site roads, service corridors, dwellings and structures; and

4. Minimize risk associated with wildfire.

H. APPROVAL CONDITIONS - Before final Planning Department approval can be granted, the following conditions must be met:

1. The Planning Director or his/her designee shall check the Division of State Lands' most current wetlands inventory maps, and determine if the site proposed for development may have a wetland located on it. If it is determined that a NWI-recognized wetland may be located on a site proposed for development, the Planning Director or his/her designee shall notify the Division of State Lands. A copy of this letter shall be sent to the applicant. DSL has 30 days to comment, beginning on the day notification is sent. A final decision on the application cannot be rendered until the 30 day comment period has expired; and

2. The applicant shall record a written statement with the deed which recognizes the rights of adjacent and nearby land owners to conduct farm and forest operations consistent with accepted farm practices and the Oregon Forest Practices Act (see ORS 30.930 and ORS 93.040), and provide evidence to the Planning Department of such action.

3. The owner of the property shall plant a sufficient number of trees on the tract so that the tract may reasonably be expected to meet state Department of Forestry stocking requirements. The Planning Department shall notify the County Assessor once the above condition has been met. This notification shall be considered sufficient for tentative approval of the dwelling. Final approval is reserved for such time when the applicant submits a stocking survey report to the County Assessor and the County Assessor verifies that the minimum stocking requirements adopted under ORS 527.610 to 527.770 have been met by the time required by Department of Forestry rules. The County Assessor shall then notify the Department of Forestry, which shall proceed to verify that stocking requirements have been met. If stocking requirements are determined not to have been met, the land will be considered not qualified for forest tax deferral pursuant to ORS 321.359, and tax liability will subsequently be imposed by the County Assessor; and

4. The applicant must submit the appropriate documentation required in 55.060(C) above.

5. Notice for all dwelling applications in Forestry and Forestry/Range zones shall be provided to the Department of Land Conservation and Development office in Salem. This notice shall be mailed at least ten days prior to the hearing or decision to allow the dwelling.

6. The use complies with other conditions as the review authority considers necessary.

55.070 - LOT OF RECORD DWELLINGS IN FOREST ZONES

A. REVIEW PROCESS - Review of applications for Lot of Record Dwellings shall be processed consistent with Article 44 and reviewed according to the Hearings Officer Review Procedure (Article 24), site plan review (Article 41), and all other applicable standards, criteria, rules, and statutes governing dwelling placement.

B. REVIEW CRITERIA - In addition to the criteria enumerated in Section 55.060, all applications for Lot of Record dwellings will be reviewed against the following criteria. The County may allow the establishment of a single-family dwelling on a lot or parcel in a Forestry zone if the following criteria are met:

1. The lot or parcel upon which the dwelling will be placed was legally created before January 1, 1985; and

2. The lot or parcel was acquired by the present owner prior to January 1, 1985 or was acquired by the present owner by devise or by intestate succession from a person who acquired the lot or parcel prior to January 1, 1985. For the purposes of Lot of Record dwellings, "owner" includes the wife, husband, son, daughter, mother, father, brother, brother-in-law, sister, sister-in-law, son-in-law, daughter-in-law, mother-in-law, father-in-law, aunt, uncle, niece, nephew, stepparent, stepchild, grandparent or grandchild of the owner or a

business entity owned by any one or combination of these family members; and

3. The tract on which the proposed dwelling will be sited does not already contain a dwelling, and no other dwellings have already been permitted for lots or parcels in that tract; and

4. The tract on which the dwelling will be sited is composed of soils not capable of producing 4,000 cubic feet per year of commercial tree species; and

5. On a tract in Eastern Oregon that is composed of soils not capable of producing 4,000 cubic feet per year of commercial tree species and is located within 1,500 feet of a public road as defined under ORS 368.001 that provides or will provide access to the subject tract. The road shall be maintained and either paved or surfaced with rock and shall not be:

   a. A United States Bureau of Land Management road; or

   b. A United States Forest Service Road unless the road is paved to a minimum width of 18 feet, there is at least one defined lane in each direction and a maintenance agreement exists between the United States Forest Service and landowner adjacent to the road, a local government or state agency.

C. APPROVAL CONDITIONS -- Before final Planning Department approval can be granted for any Lot of Record dwelling, the following conditions must be met:

1. If the lot or parcel on which the proposed dwelling will be sited is part of a tract, the remaining lots or parcels in the tract are consolidated into a single lot or parcel.

2. The applicant shall notify the County Assessor that the lot or parcel is no longer being used as forestland. The applicant must request that the County Assessor disqualify the lot or parcel for special assessment under ORS 308.370, ORS 308.765, 321.352, 321.730 or 321.815, and provide evidence to the Planning Department that the entire parcel has been disqualified true cash value under ORS 308.765, 321.352, 321.730 or 321.815. Evidence shall consist of written notice from the County Assessor of: 1) the disqualification for valuation at true cash value for forest use and 2) payment of any additional taxes and penalties due under ORS 215.236(6)(c).

3. When the lot or parcel on which the dwelling will be sited lies within an area designated in an acknowledged comprehensive plan as habitat of big game, the siting of the dwelling shall be consistent with the limitations on density upon which the acknowledged comprehensive plan and land use regulation intended to protect the habitat are based.

55.080 - 160-ACRE TEMPLATE DWELLINGS

A. REVIEW PROCESS - Review of applications for 160-Acre Template Dwellings shall be reviewed in accordance with Article 44 and the Hearings Officer Review procedure of Article 24 and the site plan review of Article 41, and all other applicable standards, criteria, rules, and statutes governing dwelling placement.

B. REVIEW CRITERIA - In addition to the criteria enumerated in Section 55.060, all applications for 160-Acre Template Dwellings will be reviewed against the following criteria. The County may allow the establishment of a single-family dwelling on a lot or parcel in a Forestry zone if the following criteria are met:

1. The tract on which the proposed dwelling will be sited does not already contain a dwelling, and no other dwellings have already been permitted for lots or parcels in that tract;

2. Lots or parcels within urban growth boundaries shall not be used to satisfy the eligibility requirements; and

3. THE TEMPLATE TEST - A template, with an internal area of 160 acres (at the same scale as the map) shall be laid upon a map, which includes the lot or parcel, and shall be centered on the center of the subject tract. The shape and alignment of the template varies depending on conditions outlined in 55.080(B)(2)(d). In order to satisfy the template test, the required number of dwellings must be located on parcels encompassed or partly encompassed by the template. The dwellings themselves may be located outside the template.

   a. If the lot or parcel upon which the dwelling will be placed is predominantly composed of soils that are capable of producing 0 to 20 cubic feet of wood fiber per acre per year (defined in OAR 660-06-005(2)), the template must encompass:

      1) All or part of at least three other lots or parcels which existed on January 1, 1993 within a 160-acre template centered on the center of the subject tract; and

      2) At least three dwellings on other lots or parcels within the template which existed on January 1, 1993 and continue to exist.

   b. If the lot or parcel upon which the dwelling will be placed is predominantly composed of soils that are capable of producing 21 to 50 cubic feet of wood fiber per acre per year, the template must encompass:

      1) All or part of at least seven other lots or parcels which existed on January 1, 1993 within a 160-acre template centered on the center of the subject tract; and

2) At least three dwellings on other lots or parcels within the template which existed on January 1, 1993 and continue to exist.

c. If the lot or parcel upon which the dwelling will be placed is predominantly composed of soils that are capable of producing more than 50 cubic feet of wood fiber per acre per year, the template must encompass:

1) All or part of at least eleven other lots or parcels which existed on January 1, 1993 within a 160-acre template centered on the center of the subject tract; and

2) At least three dwellings on other lots or parcels within the template which existed on January 1, 1993 and continue to exist.

d. TEMPLATE SHAPE AND ALIGNMENT The template used shall in all cases be a 160 acre square (dimensions 1/2 mile by 1/2 mile) centered on the center of the subject tract, unless:

1) The tract abuts a road that existed on January 1, 1993. In this case a rectangular template, described below, **may** be used in place of the square template.

2) The tract is 60 acres or larger and abuts a road or perennial stream. In these cases a rectangular template **must** be used in place of the square template. This rectangular template shall be of dimensions 1/4 mile by 1 mile, centered on the center of the subject tract and to the maximum extent possible aligned with the road or stream.

e. SPECIAL CONDITIONS The following special conditions apply if the tract is 60 acres or larger:

1) If a perennial stream or road abuts the subject tract, at least one of the dwellings that is required to be located within the rectangular template shall be on the same side of the road or perennial stream as the subject tract and within the template, or else along the road or stream on the same side as the subject parcel and within one-fourth mile of the edge of the subject tract and within one-half mile of the center of the subject tract but not necessarily inside the template.

2) If a road crosses the subject tract at least one of the three required dwellings will be on the same side of the road as the proposed dwelling.

C. APPROVAL CONDITIONS - Before final Planning Department approval for a Template Dwelling can be granted, the owner must submit proof of non-revocable deed restrictions recorded in the deed records for the parcels and lots comprising the tract. The deed restrictions shall preclude all future rights to

construct a dwelling on the tracts or to use the tracts to total acreage for future siting of dwellings for present and any future owners unless the tract is no longer subject to protection under goals for agricultural lands or forestlands.

55.090 - LARGE OWNERSHIP DWELLINGS

A. REVIEW PROCESS - Review of applications for large ownership dwelling permits shall be subject to the Type II Administrative Review procedure and the site plan review of Article 41, and all other applicable standards, criteria, rules, and statutes governing dwelling placement.

B. REVIEW CRITERIA - the County may allow the establishment of a single-family dwelling on a lot or parcel in a Forestry zone if, in addition to meeting all of the criteria enumerated in 55.060, the tract on which the dwelling will be placed contains at least 240 contiguous acres, except as provided in part C of this section.

C. An owner of non-contiguous tracts that are 1) in Klamath County or 2) in Klamath County and in Jackson, Douglas, Lane, Deschutes and/or Lake County; that are zoned Forestry, may add together the acreage of two or more tracts to total 320 acres or more to establish a forest dwelling, if the following conditions (1-3) are met:

    1. Approval for a forest dwelling under this sub-section is subject to the Conditional Use Permit process of Article 44.

    2. The criteria enumerated in section 55.060 shall apply.

    3. Pursuant to OAR 660-006-0027, for all non-contiguous lots, parcels or tracts used to meet the 320 acre minimum requirement, the covenants, conditions & restrictions form adopted as “Forest Dwelling Exhibit A” must be recorded with the county clerk of the county or counties where those lots, parcels or tracts are located. This must be done prior to the final approval of the forest dwelling.

55.095 – YOUTH CAMPS

A. A youth camp may be established in compliance with the provisions of this rule. The purpose of this rule is to provide for the establishment of a youth camp that is generally self-contained and located on a parcel suitable to limit potential impacts on nearby and adjacent land and to be compatible with the forest environment.

B. The provisions of this rule shall not apply to youth camps established prior to January 2002.

C. A "youth camp" is a facility either owned or leased, and operated by a state or local government, or a nonprofit corporation as defined under ORS 65.001, to provide an outdoor recreational and educational experience primarily for the benefit of persons twenty-one (21) years of age and younger. Youth camps do not include any manner of juvenile detention center or juvenile detention facility.

D. An application for a proposed youth camp shall comply with the following:

1. The number of overnight camp participants that may be accommodated shall be determined by the governing body, or its designate, based on the size, topography, geographic features and any other characteristics of the proposed site for the youth camp. Except as provided by subsection (D)(2) of this rule a youth camp shall not provide overnight accommodations for more than 350 youth camp participants, including staff.

2. The governing body, or its designated may allow up to eight (8) nights during the calendar year when the number of overnight participants may exceed the total number of overnight participants allowed under subsection (D)(1) of this rule.

3. Overnight stays for adult programs primarily for individuals over twenty-one years of age, not including staff, shall not exceed 10% of the total camper nights offered by the youth camp.

4. The provisions of OAR 660-006-0025(5)(a).

5. A campground as described in ORS 215.283(2)(c), ORS 215.213(2)(c), and OAR 660-006-0025(4)(e) shall not be established in conjunction with a youth camp.

6. A youth camp shall not be allowed in conjunction with an existing golf course.

7. A youth camp shall not interfere with the exercise of legally established water rights on adjacent properties.

E. The youth camp shall be located on a lawful parcel that is:

1. Suitable to provide a forested setting needed to ensure a primarily outdoor experience without depending upon the use or natural characteristics of adjacent and nearby public and private land. This determination shall be based on the size, topography, geographic features and any other characteristics of the proposed site for the youth camp, as well as, the number of overnight participants and type and number of proposed facilities. A youth camp shall be located on a parcel of at least 80 acres.

2. Suitable to provide a protective buffer to separate the visual and audible aspects of youth camp activities from other nearby and adjacent lands. The buffers shall consist of forest vegetation, topographic or other natural features as well as structural setbacks from adjacent public and private lands, roads, and riparian areas. The structural setback from roads and adjacent public and private property shall be 250 feet unless the governing body, or its designate sets a different setback based upon the following criteria that may be applied on a case-by-case basis:

    a. The proposed setback will prevent conflicts with commercial resource management practices;
    b. The proposed setback will prevent a significant increase in safety hazards associated with vehicular traffic; and
    c. The proposed setback will provide an appropriate buffer from visual and audible aspects of youth camp activities from other nearby and adjacent resource lands.

3. Suitable to provide for the establishment of sewage disposal facilities without requiring a sewer system as defined in OAR 660-011-0060(1)(f). Prior to granting final approval, the governing body or its designate shall verify that a proposed youth camp will not result in the need for a sewer system.

F. A youth camp may provide for the following facilities:

1. Recreational facilities limited to passive improvements, such as open areas suitable for ball fields, volleyball courts, soccer fields, archery or shooting ranges, hiking and biking trails, horse back riding or swimming that can be provided in conjunction with the site's natural environment. Intensively developed facilities such as tennis courts, gymnasiums, and golf courses shall not be allowed. One swimming pool may be allowed if no lake or other water feature suitable for aquatic recreation is located on the subject property or immediately available for youth camp use.

2. Primary cooking and eating facilities shall be included in a single building. Except in sleeping quarters, the governing body, or its designate, may allow secondary cooking and eating facilities in one or more buildings designed to accommodate other youth camp activities. Food services shall be limited to the operation of the youth camp and shall be provided only for youth camp participants. The sale of individual meals may be offered only to family members or guardians of youth camp participants.

3. Bathing and laundry facilities except that they shall not be provided in the same building as sleeping quarters.

4. Up to three camp activity buildings, not including primary cooking and eating facilities.

5. Sleeping quarters including cabins, tents or other structures. Sleeping quarters may include toilets, but, except for the caretaker's dwelling, shall not include kitchen facilities. Sleeping quarters shall be provided only for youth camp participants and shall not be offered as overnight accommodations for persons not participating in youth camp activities or as individual rentals.

6. Covered areas that are not fully enclosed.

7. Administrative, maintenance and storage buildings; permanent structure for administrative services, first aid, equipment and supply storage, and for use as an infirmary if necessary or requested by the applicant.

8. An infirmary may provide sleeping quarters for the medical care provider, (e.g. Doctor, Registered Nurse, Emergency Medical Technician, etc.).

9. A caretaker's residence may be established in conjunction with a youth camp prior to or after the effective date of this rule, if no other dwelling exists on the subject property.

G. A proposed youth camp shall comply with the following fire safety requirements:

1. The fire siting standards in OAR 660-006-0035;

2. A fire safety protection plan shall be developed for each youth camp that includes the following:

   a. Fire prevention measures;
   b. On site pre-suppression and suppression measures; and
   c. The establishment and maintenance of fire safe area(s) in which camp participants can gather in the event of a fire.

3. Except as determined under subsection (7)(d) of this rule, a youth camp's on-site fire suppression capability shall at least include:

   a. A 1,000-gallon mobile water supply that can access all areas of the camp; and
   b. A 30-gallon-per-minute water pump and an adequate amount of hose and nozzles; and
   c. A sufficient number of fire fighting hand tools; and
   d. Trained personnel capable of operating all fire suppression equipment at the camp during designated periods of fire danger.

4. An equivalent level of fire suppression facilities may be determined by the governing body, or its designate. The equivalent capability shall be based on the Oregon Department of Forestry's (ODF) Wildfire Hazard Zone rating system, the response time of the effective wildfire suppression

agencies, and consultation with ODF personnel if the camp is within an area protected by the Oregon Department of Forestry and not served by a local structural fire protection provider.

5. The provisions of OAR 660-006-0031(7)(d) may be waived by the governing body, or its designate, if the youth camp is located in an area served by a structural fire protection provider and that provider informs the governing body in writing that on-site fire suppression at the camp is not needed.

H. The governing body, or its designate, shall require as a condition of approval of a youth camp, that the land owner of the youth camp sign and record in the deed records for the county a document binding the land owner, or operator of the youth camp if different from the owner, and the land owner's or operator's successors in interest, prohibiting them from pursuing a claim for relief or cause of action alleging injury from farming or forest practices for which no action or claim is allowed under ORS 30.936 or 30.937.

I. Nothing in this rule relieves governing bodies from complying with other requirements contained in the comprehensive plan or implementing land use regulations such as the requirements addressing other resource values (e.g. Goal 5) which exist on forest lands.

55.100 - LAND DIVISIONS IN FOREST ZONES

Land divisions shall be processed and reviewed consistent with Article 45. In addition to review criteria contained in Section 45.050, the following criteria and conditions shall apply:

A. Forest use divisions:

1. The parcels created shall be no less than 80 acres; and
2. The proposed division is consistent with the forest use policies of the Comprehensive Plan; and
3. The proposed division does not materially alter the stability of the overall land use pattern in the area; and
4. The proposed division provides for resultant parcels of sufficient size to ensure that forest uses and practices may take place in a cost effective manner.

B. Non-forest use divisions: new land divisions less than 80 acres in size may be approved only for uses listed in Section 55.030(H) through (I) of this Code, and for uses listed in Section 55.040(A) through (N) of this Code provided that such uses have been approved pursuant to Section 55.050 of this Code. Such divisions shall create a parcel that is the minimum size necessary for use.

C. Notwithstanding Section 55.100 (B), a lot or parcel may be divided into lots smaller than the minimum lot size if the conditions (1-5) are met:

1. At least two dwellings lawfully existed on the lot or parcel prior to November 4th, 1993;
2. Each dwelling complies with the criteria for a replacement dwelling under Section 54.020 (K);
3. Except for one lot or parcel, each newly created parcel is between two and five acres in size; and
4. At least one dwelling is located on each newly created lot or parcel.
5. Each dwelling must have separate septic approval.

D. Notice for all land partition applications in Forest zones shall be provided to the Department of Land Conservation and Development office in Salem. This notice shall be mailed at least ten days prior to the hearing or decision to allow the partition.

55.110 - PROPERTY DEVELOPMENT STANDARDS

A. Minimum Parcel Size --see 55.100

B. Building Heights and Setbacks - See Article 62

C. Fences, Walls and Screening - See Article 64

D. Landscaping - See Article 65

E. Signs - See Article 66

F. Parking - See Article 68

G. Access - See Article 71

ARTICLE 55.2
FORESTRY/RANGE (FR)

55.210 - PURPOSE

The purpose of this zone is to promote management and conservation of lands of mixed farm and forest use. This productive potential of this land is considered to be greater than that of Non-Resource (NR) zoned lands, but less than that of Farm (EFU) or Forestry (F) zoned lands.

The zone shall be applied to those lands located in southern Klamath County which primarily consist of a juniper-sagebrush-bitterbrush vegetation cover, have no forest productivity rating or are predominantly rated as Class VII forest lands, may be significant wildlife habitat, and are areas of mixed BLM and private ownership.

55.220 - APPLICATION

The Forestry/Range zone includes lands of mixed farm and forestry uses. Criteria, standards, and procedures for development and land partitioning shall be determined based on tax status, soil class, existing parcel size, predominant land use as of January 1, 1993, and Goal 5 constraints.

If the predominant land use was farming, the criteria, standards, and procedures in Article 54 shall apply to all development and land partition activities.

55.230 - PROCEDURE

The county shall assign the tract to either Article 54 or Article 55 based on the following:

A. If the tract was under farm deferral as of January 1, 1993, then Article 54 applies; or

B. If the tract is not under farm deferral then Article 55 applies unless the following conditions are met, then Article 54.070 (Non-Farm Dwelling) shall apply:

   1. The tract is predominantly made up of class VII soils;
   2. The tract is less than 80 acres; and
   3. The tract is not within big game habitat.

55.250 - LAND DIVISIONS IN FORESTRY/RANGE ZONES

Land divisions shall be processed and reviewed consistent with Articles 45 and 46. In addition to review criteria contained in Section 45.050, the following criteria shall apply:

A. MINIMUM LOT SIZE - The minimum lot size is 80 acres.

B. Notice for all land divisions in the Forestry/Range zone shall be provided to the Department of Land Conservation and Development office in Salem. This notice shall be mailed at least ten days prior to the hearing or decision to allow the partition.

55.260 - PROPERTY DEVELOPMENT STANDARDS

A. Minimum Parcel Size --see 55.250

B. Building Heights and Setbacks - See Article 62

C. Fences, Walls and Screening - See Article 64

D. Landscaping - See Article 65

E. Signs - See Article 66

F. Parking - See Article 68

G. Access - See Article 71

ARTICLE 56
NON-RESOURCE (NR)

56.010 - PURPOSE

The purpose of this zone designation is to implement the non-resource land use designation of the Comprehensive Plan. These are lands that have been found to have a low Forest Site Class value, are predominantly SCS Soil Capability Class VII and VIII, are not identified as important fish and wildlife habitat, are not necessary for watershed protection or recreational use, are not irrigated or irrigable, or are not necessary to permit farm or forest practices to be undertaken on adjacent or nearby lands.

56.020 - PERMITTED USES

The following uses shall be permitted subject to site plan review of Article 41, and all other applicable standards, criteria, rules, and statutes governing such uses:

A. Single-family dwelling
B. Manufactured Dwelling
C. Animal raising, large animals
D. Animal raising, small animals
E. All permitted uses in Exclusive Farm Use, Forestry, and Forestry/Range zones
F. One additional dwelling for family members if the lot or parcel size is equal to or greater than 20 acres.

56.030 - CONDITIONAL USES

The following uses may be permitted subject to standards listed in this article and if the provisions of Article 44 are satisfied:

A. Animal raising, specialty
B. Kennels
C. Cemeteries
D. All conditional uses in the Exclusive Farm Use, Forestry, and Forestry/range zones

56.040 - PROPERTY DEVELOPMENT STANDARDS

A. Minimum Lot Size - 20 acres.

B. Lot Size and Shape - See Article 61

C. Building Heights and Setbacks - See Article 62

D. Fences, Walls and Screening - See Article 64

E. Landscaping - See Article 65

F. Signs - See Article 66

G. Parking - See Article 68

H. Access - See Article 71

ARTICLE 56.2
OPEN SPACE AND CONSERVATION
(OS&C)

56.210 – PURPOSE

The purpose of the open space and conservation zone is to protect designated areas of scenic and natural resources; to restrict development from areas with fragile, unusual, or unique qualities; to protect and improve the quality of the air, water and land resources; and to plan development so as to conserve open space. On private lands, this zone shall be applied only to property owned by nonprofit organizations dedicated to the protection of areas with fragile or unique scenic or natural qualities.

56.220 - PERMITTED USES

Those uses which are permitted by Federal and State governments in the following areas:

Federal: National Parks, Research Natural Areas, Wildlife Refuges & Designated Wilderness Areas

State: Wildlife Management Areas

Private: Lands owned by nonprofit organizations dedicated to conservation purposes

56.230 - PROPERTY DEVELOPMENT STANDARDS

Property development standards shall be determined by the appropriate agency or organization that would be necessary for the protection of public health and natural resources.

56.240 - BUILDINGS AND STRUCTURES

Buildings in conjunction with permitted uses may be established subject to a Conditional Use Permit. In addition to review criteria enumerated in Section 44.030, the following criteria shall apply:

A. The use is compatible with open space and conservation values embodied in the Comprehensive Plan;

B. The use will not interfere seriously with accepted farm and forest practices on adjacent lands devoted to those uses;

C. The use will not materially alter the stability of the overall land use pattern of the area and is located in a manner harmonious with its surroundings; and

D. The use is sited so as to not interfere with fish and wildlife habitat; and

E. Complies with such other conditions as the review body considers necessary based on findings supported by substantial evidence in the whole record.

ARTICLE 56.4
TRAIN PARK ZONE (TRP)

56.410 - PURPOSE

The purpose of the Train Park Zone is to provide for:

A. Miniature Railroad Support Area for activities needed to create and maintain the Miniature Railroad Museum, Railroad Educational Facilities and the multi-use Railroad Park.

56.415 – MINIATURE RAILROAD SUPPORT AREA

A Train Park Zone can be established to allow a Miniature Railroad Support Area where:

A. The applicant owns an existing miniature railroad with at least 5 miles of track.

56.420 – OUTRIGHT USES

Any Outright Uses allowed in a Forestry Zone as defined in 55.020.

56.430 – PERMITTED USES

A. Railroad/Train Park
B. Community Park
C. Miniature Railroad facilities
D. Custom/General Miniature Railroad manufacturing, servicing, warehousing, storage, distribution, and repair facilities.
E. Miniature Railroad Track and switch manufacturing and repair train storage
F. Train Storage
G. Museum & Museum Store
H. Picnic Shelters
I. Office Space
J. Community Assembly
K. Schools
L. Campgrounds
M. RV Parks
N. Restroom, Laundry, and Shower facilities
O. Accessory Buildings and Uses
P. Maintenance, Repair, and Storage of Equipment used to support Forestry and Miniature Railroading
Q. Parking Spaces
R. Food & Beverage Sales and Service
S. Full Sized Rail Equipment Restoration and Interpretation facilities
T. Community Water Systems

U. Community Sewage Systems
V. Private Accommodations for visiting miniature railroaders where accommodations are occupied temporarily for the purpose of enjoying or supporting miniature railroad events
W. Burn Pits
X. Caretaker / Worker Residential
Y. Uses determined by the Planning Director to be similar to those listed in this section to serve the miniature railroading recreational, public, and travel needs of the community and surrounding areas

56.440 – CONDITIONAL USES

The following uses may be permitted subject to standards listed in this article and it the provisions of Article 44 are satisfied:

A. Emergency Services
B. Fire stations for rural fire protection

56.450 – PROPERTY DEVELOPMENT STANDARDS

A. Minimum Lot Size – 2 acres
B. Lot Size and Shape – See Article 61
C. Building Heights and Setbacks – See Article 62
D. Fences, Walls and Screening – See Article 64
E. Landscaping – See Article 65
F. Signs – See Article 66
G. Parking – See Article 68
H. Access – See Article 71
I. Building size may not exceed 10,000 sqft

ARTICLE 57
SIGNIFICANT RESOURCE OVERLAY (SRO)

57.010 - PURPOSE

The purpose of the Significant Resource Overlay is to implement provisions of the Klamath County Comprehensive Plan to preserve significant natural and cultural resources, to address the economic, social, environmental and energy consequences of conflicting uses upon significant natural and cultural resources, and to permit development in a manner that does not adversely impact identified resource values.

57.020 - DEFINITIONS

"1-A" Refers to resources which, based on information concerning the location, quality, and quantity of the resource site, were determined not to be important enough to warrant inclusion on the plan inventory or are not required to be included in the inventory based on the specific Goal standards.

"1-B" Refers to a special category of sites in the inventory that have information indicating the possible existence of a resource but where the information is inadequate to identify with particularity the location, quality, and quantity of the resource site.

"1-C" Refers to resources which, based on information concerning the location, quality and quantity of the resource site, are considered to be significant, and are described in the Comprehensive Plan Goal 5 Element and/or identified on the Goal 5 Significant "1-C" Resource Map.

"2-A" Refers to "1-C" resources where: 1) no conflicting uses were identified; and 2) where policies and ordinance provisions were adopted to insure preservation of the resource site.

"3-A" Resources so designated in the Comprehensive Plan Goal 5 Element are considered to be of great significance and shall be preserved, regardless of any affects of such preservation on the conflicting uses.

"3-B" Resources so designated in the Comprehensive Plan Goal 5 Element are considered to be significant, but as a result of analysis of the economic, social, environmental and energy consequences contained in the Comprehensive Plan, any conflicting use is to be allowed, regardless of any possible impacts on the resource.

"3-C" Resources so designated in the Comprehensive Plan Goal 5 Element are considered to be significant, and conflicting uses to the resource shall be limited in order to protect the resource from irreparable harm.

57.030 - APPLICATION

In addition to all other applicable provisions of this code, this article shall apply to all land uses, land divisions, developments and associated activities coincident with a resource identified or mapped as significant ("1-C") in the Klamath County Comprehensive Plan.

A. All land uses, developments and associated activities which represent actual or potential conflicting uses to a resource as identified in Section 57.040 shall be processed as conditional uses unless otherwise specified.

   1. Uses identified as a permitted use in the underlying zone shall be reviewed solely against the standards and criteria of this article.
   2. Uses identified as a conditional use in the underlying zone shall be reviewed against the standards and criteria of this article in addition to all other applicable standards and criteria of this code.
   3. The siting of a residential dwelling when located inside a Big Game Habitat mapped "Impacted Area"; and, when substantial proof is provided showing standards enumerated in Article 57.070(C)(2)(D), (E), & (F) can be met without the application of a Conditional Use Permit and standards enumerated in Article 57.060.

B. All land divisions in big game habitat shall comply with the standards enumerated in Section 57.070;

C. Accepted farm practices as defined by this code or forest practices regulated by the Oregon Forest Practices Act are exempt from the provisions of this article;

D. If an applicant for a development permit governed by this code believes that an identified "1-C" resource is not present on the site or is not affected by the development proposal, the applicant shall provide substantial evidence to the County prior to submitting an application demonstrating how this article does not apply. The Planning Director or his/her designee shall consult with appropriate resource management agencies and issue an order of determination pursuant to the Type II Administrative Review Procedure (Article 22).

57.040 - CONFLICTING USES

A. Mineral and Aggregate Resources

1. Dwellings
2. Manufactured dwelling or recreational vehicle parks
3. Schools and churches
4. Parks, campgrounds, hunting and fishing preserves
5. Community centers and recreation facilities

6. Motels or travelers' facilities
7. Public buildings

B. Bear Valley Wildlife Refuge

1. Within the Core Area and Primary Buffer Area
   a. Forest management activities inconsistent with interagency Bald Eagle Management Guidelines and not regulated by the Oregon Forest Practices Act
   b. Residential development and permanent structures
   c. Roads and highways
   d. Mining
   e. Discharge of pollution
2. Within the Secondary Buffer Area
   a. Residential development greater than 1 dwelling per 20 acres
   b. Commercial or industrial activities
   c. Schools and churches
   d. Electrical transmission lines
   e. Roads and highways
   f. Discharge of pollutants
   g. Forest management activities not regulated by the Oregon Forest Practices Act
   h. Mining between November and April
3. Within the Flyway
   a. Electrical transmission lines
   b. Residential development greater than 1 dwelling per 20 acres
   c. Commercial or industrial development

C. Wetlands/Riparian Areas/Class I Streams/Fish Habitat

1. Non water-dependent uses
2. Shoreline development or alteration
3. Removal of riparian vegetation
4. Filling or removing material/instream modification
5. Introduction of pollutants (point or non-point)

6. Water impoundments
7. Drainage or channelization

D. Big Game Winter Range

1. Dwellings
2. Commercial uses
3. Mining
4. Roads and highways
5. Parks and campgrounds
6. Schools and churches
7. Extensive impact facilities
8. Golf courses

E. Historic Resources

1. Demolition or alteration

F. Archeological Resources

1. Any excavation or mining activity in a known archeologically sensitive area as identified in the Comprehensive Plan which disturbs more than 10,000 square feet to a depth greater than an average of 12 inches below the natural surface
2. Any activity resulting in permanent coverage of a resource site

G. Wild and Scenic Waterways

1. Commercial or industrial development
2. Dams, impoundments or diversion facilities
3. Filling or removing material
4. Mining

57.050 - GENERAL REVIEW PROCEDURE

A. Where a decision has been made to protect a resource inventoried in the Comprehensive Plan from conflicting uses (a "3-A" decision), applicants must clearly demonstrate that the proposed use will not negatively impact the resource. Applications for a development permit shall be reviewed in the following manner:

1. The applicant shall submit a resource management plan meeting the requirements of subsection 4 of this section to the County.

2. Resource management agencies identified in Section 570.080 shall review the application against their plans, policies and programs for resource management and determine whether or not the development proposal complies or does not comply with their mandated plans, policies and programs for resource preservation.
3. If a resource management agency does not accept an applicant's resource management plan as adequate for preservation of the resource in question, the County shall deny the development permit application.
4. Resource management plans shall include the following elements:
   a. A detailed description of the development proposal including a description of all associated activities and operating characteristics of the use;
   b. A description of possible impacts (positive or negative) to the resource resulting from the proposed development;
   c. A description of the type, extent and location the of the resource involved;
   d. A written statement detailing the proposed strategy to preserve the identified resource. Such strategy shall include, but not be limited to:
      1) Restrictions on conflicting uses, and the means by which such restrictions will be enforced;
      2) The provision of buffer areas, and the means to enforce use limitations in the buffer areas;
      3) A mitigation program which considers alternatives to the proposed development and includes standards to assess the effectiveness of the mitigation effort;
      4) A monitoring plan for the site to assess long-term impacts from development activities, including indicator species or conditions that will allow for long-term monitoring;
      5) Special provisions such as conservation easements or land dedications.
   e. Documentation of sources relied upon in developing the management plan.

B. Where a decision has been made to allow conflicting uses to a resource inventoried in the Comprehensive Plan (a "3-B" decision), this article shall not apply to the development proposal.

C. When a decision has been made to limit conflicting uses to a resource inventoried in the Comprehensive Plan (a "3-C" decision), applications for a development permit shall be reviewed in the following manner:
   1. A complete application including a detailed description of the development proposal which address the standards and criteria of this article shall be referred for comment to local, state or federal agencies having responsibility for resource management as identified in Section 57.090.

2. Resource management agencies may review the application against their plans, policies and programs for resource management and respond to the County as to how they believe the development proposal complies or does not comply with their plans, policies and programs, and does or does not comply with the applicable criteria and standards of this article.
3. The appropriate review body shall incorporate all comments, determinations and recommendations of resource management agencies into its decision, or shall make findings based on substantial evidence in the whole record why the agency comments, determinations and recommendations do not apply.

57.060 - GENERAL REVIEW CRITERIA

The following review criteria shall apply to all actions governed by this article unless otherwise specified. Criteria and standards enumerated in Section 57.070 shall also apply as appropriate.

A. The resource site will not be altered or impacted to a degree that destroys its significance;

B. The proposed development will not result in the loss of habitat for threatened or endangered species of animals or plants as identified by the U.S. Fish and Wildlife Service, Oregon Department of Fish and Wildlife or other appropriate state or federal agency;

C. All feasible alternatives to the development have been considered and rejected which would not result in a substantial adverse impact on an identified resource value;

D. The development is sited on the property in such a manner that minimizes adverse impacts on the identified resource; and

E. Documentation has been provided to the County regarding requirements for state or federal permits or licenses, and that appropriate resource management agencies have reviewed the development proposal against its plans, policies and programs.

57.070 - SPECIFIC DEVELOPMENT CRITERIA AND STANDARDS

A. Mineral and Aggregate Resources

1. Establishment of a conflicting use will not force a significant change in or significantly increase the cost of accepted and lawful mining operations on adjacent and nearby land.
2. Conflicting uses shall be located a minimum of 1000 feet from an identified mining site where the property's size and configuration allows such a set back.
3. Conflicting uses shall be located upwind from identified sites where practicable.
4. Conflicting uses shall be located in a manner that screens the residence from site and sound of mining site.

5. Approval of a conflicting use shall be conditioned upon the applicant recording a statement with the property deed recognizing the rights of mining operations on adjacent and nearby land to continue consistent with all applicable laws and regulations governing such uses.

B. Riparian Area--Class I Streams/Surface Waters

1. Delineation of Riparian Areas of Concern - In order to protect, maintain and enhance the water quality and biological productivity of Class I streams and surface waters identified in the Comprehensive Plan, a riparian area of concern is designed as 100 feet from the ordinary high water line of Class I streams and surface waters. The riparian area of concern may be less upon a determination that the line of upland vegetation exists within 100 feet of the ordinary high water line.

2. Regulated activities in Riparian Areas of Concern

   a. Preservation of Vegetation. All trees and not less than 50% of the understory vegetation shall be preserved, unless the removal of dead, diseased or dying trees is required to prevent property damage or maintain navigation, or unless conducted in accordance with other provisions of this code.

   b. Discharge of pollution. Pollutants shall not be introduced into riparian areas or waterways. Uses and activities shall not have a significant adverse impact on water quality or the beneficial use of water by adjacent or downstream users. State and federal water quality laws and regulation shall be applied to determine compliance.

   c. Fill and removal, modification of stream channels. All activities shall be conducted in accordance with laws and regulations of appropriate state and federal agencies.

   d. Erosion control. Temporary measures such as sandbags, straw or other ground cover to retard sedimentation during construction shall be employed.

      Permanent erosion control measures shall be required for any activity, which generates chronic runoff or sedimentation into a riparian area of concern. All vegetation affected by construction shall be replaced immediately upon completion of construction.

3. Setbacks for development

   a. No permanent structure shall be placed within a riparian area of concern except as provided in this article.

   b. All subsurface sewage disposal systems shall be set back not less than 100 feet from the ordinary high water line of any identified water body or wetland.

4. Special exception/requirements – The following activities are exempt from the requirements of this article:

   a. Residential uses on a lot or parcel legally created prior to November 15, 1990. Structures and subsurface sewage disposal systems shall be setback from waterways the maximum amount practicable.

   b. Structures necessary and required to make use of a water right.

   c. Public works projects coordinated through responsible state or federal agencies having jurisdiction for resource management.

   d. Structural erosion control activities where no practicable non-structural alternative exists.

C. Big Game Habitat

1. Land Divisions – Minimum Parcel Size

   A) Deer

      1) 80 acres in Low – Medium Density Winter Range

      2) 160 acres in High Density Winter Range

   B) Antelope High Density Winter Range: 160 acres

   C) Elk

      1) 160 acres in Rocky Mountain High Density Winter Range

      2) 160 acres in Roosevelt Elk High Density Spring Range

      3) 160 acres in Roosevelt Elk High Density Winter Range

   D) Impacted Area

      1) The minimum parcel size will be the minimum parcel size of the underlying zone.

2. Residential Development Standards

   A. Residential home sites (including accessory buildings) fronting a public road may be permitted if:

      1) Not more than 330 feet from an existing dwelling;

      or

      2) Not more than 150 feet from a side property boundary; and

      3) Not more than 100 feet from an existing public road.

B. Residential home sites (including accessory buildings) on a parcel in a mapped “impacted area” shall be sited using the Base Zoning setback standards.

C. Residential home sites (including accessory buildings) not fronting a public road and on a parcel not within a mapped “impacted area” may be permitted if:

1) Not more than 7 other dwellings exist within a 640 acre square centered on the center of the subject parcel in mapped areas of impacted (low-medium density) deer winter range; or

2) Not more than 3 other dwellings exist within a 640 acre square centered on the center of the subject parcel in mapped areas of important (high density) deer winter range; or

3) Not more than 3 other dwellings exist within a 640 acre square centered on the center of the subject parcel in mapped areas of Antelope High Density Winter Range or Rocky Mountain Elk High Density Winter Range or Roosevelt Elk High Density Spring Range or Roosevelt Elk High Density Winter Range.

D. Residential home sites (including accessory buildings) shall not be sited within a critical habitat area or a migration corridor as may be identified by the Oregon Department of Fish and Wildlife, when the habitat area or migration corridor has been identified in the Comprehensive Plan.

E. Fencing provisions shall apply as a condition of approval for any new fences constructed as part of development of a property in conjunction with a conditional use permit or site plan review.

a. New fences on the perimeter of the property shall be designed to permit wildlife passage. The following standards and guidelines shall apply:

1. The distance between the ground and bottom strand or board shall be at least 16 inches.

2. The height of the fence shall not exceed 44 inches above ground level.

3. Smooth wire and wooden fence that allow passage of wildlife are preferred. Woven wire fences are discouraged.

b. Exceptions:

1. Fences around home sites designed to exclude wildlife from gardens, flowerbeds, orchards, etc., shall enclose no more than 1 acre.

2. Corrals used for working livestock.

F. Approval of a dwelling shall be conditioned upon the resident filing a statement with the property deed agreeing to control free-roaming dogs. Said agreement shall include a statement recognizing damage from wildlife may occur when siting a dwelling or accessory building in the Significant Resources Overlay.

G. Approval of a dwelling shall be conditioned upon applicant filing a restrictive covenant with the property deed agreeing to restrict off-road vehicle use from November to April. Farm or Forest tax deferred property is exempt from this covenant, but off-road use is limited to property management, and owner is required to show proof that property is in tax deferral, at time of development.

D. Geothermal Resources

Development proposals coincident with identified geothermal resource shall comply with the provisions of Article 59.040 of this code.

E. Archeological Resources

Development proposals coincident with archeological resources shall comply with the provisions of Article 86 of this code.

F. Historic Resources

Demolition of or alteration to an identified historic resource shall comply with the provisions of Article 87 of this code.

57.080 - INVENTORY AMENDMENT PROCEDURE

A. The purpose of this Section is to codify the procedure for adding a site to the appropriate Goal 5 inventory, determine the significance of the site, and apply Article 57 to the site.

B. The application shall be handled as an amendment to the Klamath County Comprehensive Plan and the zoning map, using the criteria set forth under Section 48.030 for quasi-judicial actions and Section 49.030 for legislative actions, and shall be subject to the criteria set out in Section 57.080(C), depending on the site and inventory.

C. All sites proposed for inclusion on a Goal 5 inventory as a significant resource with the Significant Resource Overlay Zone applied shall be submitted with the following information:

1. Complete tax account number and a map showing the boundaries of the site;
2. Detailed information on the quantity of the resource at the site;

3. Detailed information on the quality of the resource at the site;
4. A plot plan showing that the proposed site meets all applicable setbacks in the Klamath County Land Development Code as applicable;
5. Submit a detailed report of all potential and mapped conflicting uses as identified in Section 57.040, including, but not limited to, farm and forest uses, dwelling units and other significant natural, cultural and Goal 5 resources;
6. A submittal of findings that the proposed resource site meets and satisfies any applicable development and/or special use standards in this Code;
7. A submittal of findings that the proposed resource site meets the criteria set forth under Articles 48 or 49 of the Klamath County Land Development Code.

57.090 - RESOURCE MANAGEMENT AGENCIES

A. Mineral and Aggregate Resources

1. Oregon Department of Geology and Mineral Industries
2. Oregon Department of Fish and Wildlife
3. Oregon Department of Environmental Quality
4. Oregon State Highway Division
5. Klamath County Public Works Department

B. Bear Valley Wildlife Refuge

1. U.S. Fish and Wildlife Service
2. Oregon Department of Fish and Wildlife
3. Oregon Department of Forestry

C. Wetlands/Riparian Areas/Class I Streams/Fish Habitat

1. U.S. Fish and Wildlife Service
2. U.S. Bureau of Reclamation
3. Oregon Department of Environmental Quality
4. Oregon Department of Fish and Wildlife
5. Oregon Division of State Lands
6. Klamath Tribe

D. Upland Game Bird Sites

1. Oregon Department of Fish and Wildlife
2. Klamath Tribe

E. Raptor Nest Sites and Rookeries

1. Oregon Department of Fish and Wildlife
2. U.S. Fish and Wildlife Service
3. U.S. Forest Service
4. U.S. Bureau of Land Management

F. Big Game

1. Oregon Department of Fish and Wildlife
2. Klamath Tribe

G. Natural Areas

1. U.S. Forest Service
2. U.S. Bureau of Land Management

H. Groundwater Resources

1. Oregon Department of Water Resources
2. Oregon Department of Environmental Quality

I. Geothermal Resources

1. Oregon Department of Energy

J. Historic Buildings and Sites

1. Oregon State Historic Preservation Office
2. Klamath County Historical Landmark Commission

K. Archeological Resources

1. Klamath Tribe
2. Oregon State Historic Preservation Office

L. Wild and Scenic Waterways

1. Oregon Department of Parks and Recreation
2. U.S. Forest Service
3. U.S. Bureau of Land Management

ARTICLE 58
AIRPORT SAFETY OVERLAY - KINGSLEY FIELD (ASK)

58.010 - AIRPORT SAFETY ZONES DEFINED

Safety zones include all land lying underneath or within approach zones, transitional zones, horizontal zones and conical zones as they apply to the City of Klamath Falls Kingsley Field. Such safety zones are shown on the Kingsley Field Airport Master Plan 1987-2005, adapted by the City of Klamath Falls, January 1988. The safety zones are defined as follows:

A. Precision Instrument Runway Approach Zone - A surface 1,000 feet wide at the end of Runway 32 and expanding uniformly to a width of 16,000 feet 50,000 feet from the end of the primary runway surface. The centerline of the surface is the continuation of the runway centerline.

B. Non-precision Instrument Runway Approach Zone - A surface 1,000 feet wide at the end of Runway 14 and expanding uniformly to a width of 3,500 feet 10,000 feet from the end of the primary runway surface. The centerline of the surface is the continuation of the runway centerline.

C. Utility Runway Visual Approach Zone - A surface 500 feet wide at the end of Runway 7-25 and expanding uniformly to a width of 1,250 feet 5,000 feet from the end of the primary runway surface. The centerline of the surface is the continuation of the runway centerline.

D. Transitional Zones - Surfaces extending outward and upward at 90-degree angles to the runway centerline at a slope of 7 to 1. Transitional zones for portions of the precision approach zones which, project through and beyond the limits of the conical surface extend 5,000 feet from the edge of the approach zones measured at 90-degree angles to the runway centerline.

E. Horizontal Zone - A surface established by swinging arcs of 10,000 feet radii from the centerline of each end of Runway 14-32, and connecting the arcs by drawing lines tangent to those arcs. The horizontal zone does not include the approach and transitional zones.

F. Conical Zone - A surface at the periphery of the horizontal zone extending outward a distance of 4,000 feet. The conical zone does not include the precision instrument approach zones and the transitional zones.

58.020 - USE RESTRICTIONS

A. Safety Hazards - No land use is permitted within any airport safety zone defined in Section 58.010 that;

1. Creates electrical interference with navigational signals or radio communication between the airport and aircraft;

2. Interferes with a pilot's ability to distinguish between airport lights and other lights; or

3. Results in glare in the eyes of pilots using the airport;

4. Impairs visibility of the airport by means of smoke or other visual impairments;

5. Attracts concentrations of birds within 10,000 feet of the airport; or

6. In any other way creates a hazard or endangers the landing, takeoff, or maneuvering of aircraft using the airport.

B. Approach Safety Zone - On lands lying within approach zones defined in Section 58.020, the following restrictions shall apply:

1. All development shall be subject to a conditional use permit.

2. Uses determined by the review body as attracting large groups of people shall be prohibited.

3. Multifamily residences or any other group residential facility shall be prohibited.

4. Schools, hospitals, churches and similar civic uses defined by the review body shall be prohibited.

5. Single-family residences may be permitted at a density not greater than one dwelling per 5 acres, except that a dwelling may be permitted on a lot or parcel lawfully existing on November 15, 1990 regardless of the property's size.

58.030 - HEIGHT LIMITATIONS

Notwithstanding other provisions of this code, no building, structure or tree shall be established, maintained or allowed to grow in excess of the height established for the applicable safety zone. Height limitations for the applicable safety zones are defined as follows:

A. Precision Instrument Runway Approach Zone - The surface coincident with Runway 32 extending outward and upward at a slope of 50 to 1 beginning at the end of, and at the same elevation as, the primary runway surface and extending 10,000 feet outward along an extension of the runway centerline; thence extending outward and upward at a slope of 40 to 1 an additional 40,000 feet outward at a slope of 40 to 1 an additional 40,000 feet outward along an extension of the runway centerline.

B. Non-precision Instrument Runway Approach Zone - The surface coincident with Runway 14 extending outward and upward at a slope of 40 to 1 beginning at the end of, and at the same elevation as, the primary runway surface and extending 5,000 feet outward along an extension of the runway centerline.

C. Utility Runway Visual Approach Zone - This surface coincident with Runway 7-25 extending outward and upward at a slope of 20 to 1 beginning at the end of, and at the same elevation as, the primary runway surface and extending 5,000 feet outward along an extension of the runway centerline.

D. Transitional Zones - The surface extending outward and upward beginning at the side of and at the same elevation as, the primary runway surface and the approach zones, and extending to where it intersects the horizontal zone. Where the approach surfaces pass through the conical surface, the transitional zone shall be the surface extending outward and upward at a slope of 7 to 1 beginning at the sides of and at the same elevation as the approach zones and extending to where they intersect with the conical surface. Where the precision instrument runway approach zone projects beyond the conical zone, the transitional zone shall be the surface extending outward and upward at a slope of 7 to 1 beginning at the sides of and at the same elevation as the precision instrument runway approach surface, and extending a horizontal distance of 5,000 feet outward measured at 90-degree angles to an extension of the run way centerline.

E. Horizontal Zone - An elevation of 4,242 feet above mean sea level, or 150 feet above the airport.

F. Conical Zone - The surface extending outward and upward at a slope of 20 to 1 beginning at the periphery of the horizontal zone and extending to an elevation of 4,442 feet above mean sea level, or 350 feet above the airport.

G. Applicable Height Limitation - Where an area may be subject to more than one height limitation, the more restrictive limitation shall apply.

ARTICLE 58.2
AIRPORT NOISE OVERLAY - KINGSLEY FIELD (ANK)

58.210 - APPLICATION

Noise measurements in the vicinity of the Klamath Falls/ Kingsley Field are expressed in terms of daynight average sound level (Ldn) contours. The Ldn contours designated on the Klamath County Comprehensive Plan and official zoning map define bands within which certain uses may be adversely affected by aircraft noise. The purpose of these special standards is to identify uses appropriate within these bands and to specify development standards that ensure the public health, welfare and safety. The contours are derived from the Noise Impact Boundary Study for Kingsley Field, December, 1980.

58.220 - PERMITTED AND CONDITIONALLY PERMITTED USES

If the boundaries of the airport noise overlying zone overlap any portion of a basic zone designation, then said portion shall be subject to the use limitations described by this article. In no case shall the airport noise overlay permit a more intensive use than that allowed by the basic zone designation.

A. Area Within the 65-70 Ldn Contours:

1. Permitted uses include parks, playgrounds, golf courses, riding stables, water-based recreation areas, cemeteries, industrial, and all agricultural use types in accordance with the basic zone designation.

2. Conditionally permitted uses include single-family and multifamily residential uses, commercial uses, civic uses, offices, lodging, and sports arenas and stadiums in accordance with the basic zone designation.

3. Development provisions shall apply as conditions of approval for any residence or land division in conjunction with a conditional use permit or site plan review.

    a. Development of residential dwellings and land division shall include a written statement recorded with the deed which recognizes the existence of the Klamath Falls Airport and all present and future operational activities and practices. Said statement shall incorporate a health and safety agreement of *"no remonstrance/no complaint"*; and, the acceptance of present and future noise impact(s).

    b. Placement of a dwelling through the conditional use permit process may be permitted on a lot or parcel created regardless of property's size; unless, prohibited by the underlying land use zone.

B. Area Within the 70 and Greater Ldn Contour:

1. Permitted uses include golf courses, riding stables, water-bases recreation areas, cemeteries, industrial, and all agricultural uses in accordance with the basic zone designation.
2. Conditionally permitted uses include civic and commercial uses, offices, and lodging uses in accordance with the basic zone designation.
3. Prohibited uses include permanent residential, community education, religious assembly, cultural exhibits and library services, and any health care related use.

58.230 - MITIGATION OF NOISE IMPACTS

In addition to the standards of the basic zone designation, the following shall be required prior to development approval:

A. Insulation required - Applicant shall prepare a plan that will provide for adequate noise insulation. Appropriate criteria, to be determined by the applicant, for attenuation of airport and aircraft noise shall be based on the proposed use and the level of noise it can tolerate without interference or annoyance. Adequate noise insulation shall be installed prior to approval of the final inspection for a building permit.

ARTICLE 58.4
AIRSTRIP SAFETY OVERLAY
BEAVER MARSH, CHILOQUIN, CRESCENT LAKE AND MALIN (AS)

58.410 - AIRSTRIP SAFETY ZONES DEFINED

Safety zones include all land lying underneath or within primary zones, horizontal zones, conical zones, approach zones and transitional zones for the airstrips at Beaver Marsh, Chiloquin, Crescent Lake and Malin. The safety zones are defined as follows:

A. Primary Zone - A surface 500 feet in width centered on the runway and extending 220 feet beyond each end of the runway.

B. Horizontal Zone - A surface 150 feet above the airport elevation created by swinging arcs of 5,000 feet radii from the center of each end of the primary runway surface and connecting the adjacent arcs by lines tangent to the arcs.

C. Conical Zone - A surface extending 4,000 feet as measured radially from the horizontal surface outward and upward at a slope of 20 to 1.

D. Approach Zone - A surface the same width and elevation of the runway and expanding uniformly outward and upward at a slope of 20 to 1 to a width of 1,250 feet 5,000 feet from the end of the primary runway surface. The centerline of the surface is the continuation of the runway centerline.

E. Transitional Zone - All that land which lies directly under and imaginary surface extending outward and upward at right angles to the runway centerline and centerline extended at a slope of 7 to 1 from the sides of the primary surfaces and from the sides of the approach surfaces until they intersect the horizontal surface or the conical surface. A surface extending outward and upward at right angles to the runway centerline at a slope of 7 to 1 from the sides of the primary surfaces and from the sides of the approach surfaces until they intersect the horizontal surface or the conical surface.

58.420 - USE RESTRICTIONS

A. Safety Hazards - No land use is permitted within any airport safety zone defined in Section 58.410 that:

   1. Creates electrical interference with navigational signals or radio communication between the airport and aircraft;

   2. Interferes with a pilot's ability to distinguish between airport lights and other lights;

3. Results in glare in the eyes of pilots using the airport;

4. Impairs visibility of the airport by means of smoke or other visual impairment;

5. Attracts concentrations of birds within 10,000 feet of the airport; or

6. In any other way creates a hazard or endangers the landing, takeoff, or maneuvering of aircraft using the airport.

B. Approach Zones - On lands lying within approach zones defined in Section 58.410, the following restrictions shall apply:

1. All development shall be subject to a conditional use permit.

2. Uses determined by the review body as attracting large groups of people shall be prohibited.

3. Multiple-family residences or any other group residential facility shall be prohibited.

4. Schools, hospitals, churches and similar civic uses as defined by the review body shall be prohibited.

5. Single-family residential may be permitted at a density not greater than one dwelling per 5 acres, except that a dwelling may be permitted on a lot or parcel lawfully existing on November l5, 1990 regardless of the property's size.

58.430 - HEIGHT RESTRICTIONS

Notwithstanding other provisions of this code, no building, structure or tree shall be established, maintained or allowed to grow so as to project above or into any of the surface defined in Section 58.410. Where an area may be subject to more than one height limitation, the more restrictive limitation shall apply. Nothing in this subsection shall be construed as to prohibit any building, structure or tree not greater than 30 feet in height in any safety zone.

ARTICLE 59
FLOOD HAZARD OVERLAY (FHZ)

59.010 - PURPOSE

The purpose of this overlay is to regulate the development of areas that are subject to flooding, erosion or similar hazards, in order to avoid or reduce losses to life and property.

The areas of special flood hazard identified by the Federal Insurance Administration in a scientific and engineering report entitled "The Flood Insurance Study for Klamath County", dated December 18, 1984 with accompanying Flood Insurance Maps is hereby adopted by reference and declared to be part of this code. The Floor Insurance Study is on file at the Klamath County Planning Department.

59.020 - FLOOD HAZARD AREA DEFINED

The special flood hazard area is land within the 100-year flood level as shown on the current Flood Insurance Rate Maps (FIRM) and the Flood Boundary and Floodway Maps prepared for the National Flood Insurance Program by the Federal Emergency Management Agency (FEMA).

59.025 - FLOOD HAZARD DETERMINATION

A flood hazard determination will be provided pursuant to a Type I Administrative Review (Article 22.030). A request for a flood hazard determination shall be accompanied by a completed form and a fee set by the County Commissioners.

59.030 - INTERPRETING FLOOD MAPS

When base flood elevations have not been provided by flood hazard maps or where the applicant believes the property is not located in a flood hazard area, the applicant shall provide the Planning Director documentation based on information available from other sources in order to implement this article.

59.040 - DEVELOPMENT REQUIREMENTS

All proposed development that occurs within a special flood hazard area is subject to regular development permit procedures and in addition shall be referred to the Director of Public Works or Building Officials as provided below:

A. Normal Depth Analysis - A normal depth analysis or other equivalent engineering analysis may be required which demonstrates to the satisfaction of the Director of Public Works that no structure will be located within the floodway. The following information is required in order to determine the precise location of the floodway:

1. Plans drawn to an appropriate scale showing the location, dimensions, and elevation to the lot, existing or proposed structures, fill, storage of materials, flood proofing measures, and the relationship of the above to the location of the floodway;

2. A typical valley cross-section showing the normal channel of the stream, elevation of the land areas enjoining each side of the channel, cross-sections of areas to be occupied by the proposed development and high-water information sufficient to define the 100-year storm flood profile; and

3. A profile, showing the slope of the bottom of the channel or flow line of the stream.

B. Structural Plan - Where information that proposed structures are located outside the floodway but within the flood fringe, a structural plan shall be provided for review and approval by the Building Official. The plan is to demonstrate that proposed structures are designed to withstand partial inundation, and that proposed use will not subject occupants to undue risk of flooding. Such structural plans shall include, dredging, grading, channel improvement, storage of materials, water supply, and sanitary facilities. Site design standards, if necessary, shall be determined during the review procedure.

59.050 - PERMIT REVIEW

The Planning Director shall review development proposals to determine that all necessary permits have been obtained from those Federal, State or local government agencies from which prior approval is required.

59.060 - RECORD KEEPING

The following information shall be maintained by the Planning Director and shall be available for public inspection:

A. The elevation above mean sea level of the lowest floor (including basement) and certification of all new or substantially improved structures, and whether or not the structure has a basement.

B. The elevation above mean sea level and certification for all new or substantially improved flood-proofed structures.

59.070 - EXEMPTIONS TO FLOOD HAZARD AREA STANDARDS

All uses proposed within a Flood Hazard Overlay Zone are subject to the standards presented herein, except:

A. Temporary Uses - The Planning Department may authorize the construction or

placement of a temporary structure or use within a flood hazard area without compliance with these standards, with the approval of the Building Official, provided that the structure or use will not be in place during the period from the beginning of October to the end of May.

B. Emergency Work - Emergency work may be undertaken where necessary to preserve life or property. Within 48 hours after commencement of such work, the Director of Public Works is to be notified, and an application filed with the Planning Department.

C. Existing Uses - The continuance, operation, repair, or maintenance of any lawful use of land existing on the effective date of this code is permitted. Any expansion or alteration of an existing structure or use, or grading of a site, shall be conducted in accordance with all applicable provisions of this code.

D. Structures necessary to make use of a water right.

59.080 - SITE DESIGN STANDARDS

The following site design standards shall apply to all land and buildings, except that any lot held under separate ownership on the effective date of this code, which is substandard in area or dimensions may be used subject to all other standards:

A. Lot Area, Lot Dimensions, Yard, Building Heights, Distance between Buildings, Signs and Off-Street Parking shall be in accordance with the basic zone requirements.

B. Fences, Hedges and Walls - No fence, hedge, or wall shall be placed to restrict normal or free flow of water or access for maintenance vehicles to the natural water course.

C. Access - Access to area shall be provided as required to permit maintenance of natural resources and shall be subject to the approval of the Public Works Department.

59.090 - GENERAL DEVELOPMENT STANDARDS

In all areas of special flood hazard, the following standards are required:

A. Anchoring

1. All new construction and substantial improvements shall be anchored to prevent flotation, collapse, or lateral movement of the structure.
2. All new manufactured dwellings must likewise be anchored to prevent flotation, collapse, or lateral movement, and shall be installed using methods and practices that minimize flood damage.

3. Anchoring methods may include, but are not limited to use of over-the-top or frame ties to ground anchors.

B. Construction Materials and Methods

1. All new construction and substantial improvements shall be constructed with materials and utility equipment resistant to flood damage.
2. All new construction and substantial improvements shall be constructed using methods and practices that minimize flood damage.

C. Utilities

1. All new and replacement water supply systems shall be designed to minimize or eliminate infiltration of flood-waters into the system.
2. New and replacement sanitary sewage systems shall be designed to minimize or eliminate infiltration of flood waters into the systems and discharge from the systems into flood waters; and,
3. On-site waste disposal systems shall be located to avoid impairment to them or contamination from them during flooding.

D. Subdivisions

1. All subdivision proposals shall be consistent with the need to minimize flood damage;
2. All subdivision proposals shall have public utilities and facilities such as sewer, gas, electrical, and water systems located and constructed to minimize flood damage;
3. All subdivision proposals shall have adequate drainage provided to reduce exposure to flood damage; and
4. Base flood elevation data shall be provided for subdivision proposals and other proposed development, which contains at least 50 lots or 5 acres (whichever is less).

59.100 - UNAVAILABLE ELEVATION DATA

Where elevation data is not available, applications for building permits shall be reviewed to ensure that proposed construction will be reasonably safe from flooding. The test of reasonableness is a local judgment and includes use of historical data, high water marks, photographs of past flooding, etc., where available.

59.110 - SPECIFIC STANDARDS

In all areas of special flood hazards where base flood elevation data is available or has been provided the following provisions are required:

A. Residential Construction

1. New constructions and substantial improvements of any residential structure shall have the lowest floor, including basement, elevated to or above base flood elevation.

2. Fully enclosed areas below the lowest level that is subject to flooding are prohibited, or shall be designed to automatically equalize hydrostatic flood forces on exterior walls by allowing for the entry and exit of floodwater. Designs for meeting this requirement must either be certified by a registered professional engineer or architect or must meet or exceed the following minimum criteria:

   a. A minimum of two openings having a total net area of not less than one square inch for every square foot of enclosed area subject to flooding shall be provided.
   b. The bottom of all opening shall be no higher than one foot above grade.
   c. Openings may be equipped with screens, louvers, or other coverings or devices provided that they permit the automatic entry and exit of floodwaters.

B. Nonresidential Construction

New construction and substantial improvement of any commercial, industrial or other nonresidential structure shall either have the lowest floor, including basement elevated above the level of the base flood elevation or, together with attendant utility and sanitary facilities, shall:

1. Be flood-proofed so that below the base flood level the structure is watertight with walls substantially impermeable to the passage of water;

2. Have structural components capable of resisting hydrostatic and hydrodynamic loads and effects of buoyancy;

3. Be certified by a registered professional engineer or architect that the design and methods of construction are in accordance with accepted standards of practice for meeting provisions of this subsection based on their development and/or review of the structural design, specifications and plans. Such certifications shall be provided to the Planning Director;

4. Nonresidential structures that are elevated, not flood-proofed, must meet the same standards for space below the lowest floor as described in this subsection; and

5. Applicants flood-proofing nonresidential buildings shall be notified that flood insurance premiums will be based on rates that are one foot below the flood-

proofing level (e.g. a building constructed to the base flood level will be rated as one foot below that level).

C. Manufactured Dwellings - All manufactured dwellings to be placed or substantially improved within Zones A1-30, AH and AE shall be elevated on a permanent foundation such that the lowest floor of the manufactured dwelling is at or above the base flood elevation and be securely anchored to an adequately anchored permanent foundation system in accordance with the provisions of Section 59.090(A).

59.120 - FLOODWAYS

In areas of special flood hazard areas designated as floodways the following activities are prohibited: encroachments, including fill, new construction, substantial improvements, and other development unless certification by a registered professional engineer or architect is provided demonstrating that encroachments shall not result in any increase in flood levels during the occurrence of the base flood discharge.

59.130 - ALTERATION OF WATER COURSES

A. The alteration or relocation of a watercourse shall comply with the provisions of Article 57 as well as all other applicable state and federal regulations governing waterway development.

B. The altered or relocated portion of any watercourse shall be maintained so that the flood carrying capacity is not diminished.

ARTICLE 59.4
GEOTHERMAL OVERLAY (GEO)

59.410 - PURPOSE

The purpose of the Geothermal Overlay zone is to efficiently use and maximize significant geothermal resources of Klamath County for industrial and commercial processes.

59.420 - APPLICATION

The Geothermal Overlay Zone shall be applied only to land meeting all of the following standards:

A. That all applicable comprehensive plan policies be met with specific consideration of policies numbered Goal #2, Goal #11, Policy 13; Goal #12, Policy #2; Goal #12, Policy #4; Goal #13, Policies #1, #2 and #4.

B. Data indicating that the quality and quantity of the geothermal resource exists to support the proposed industrial or commercial development.

C. This overlay zone designation can only be applied to those lands as identified on the Generalized Groundwater Aquifers and Geothermal Resource Map, or where sufficient studies and test wells indicate a significant geothermal resource exists.

D. That the resource must be used, and used primarily for either industrial or commercial process uses.

E. That geothermal resource shall be used in accordance with any State or Federal laws in effect.

59.430 - PERMITTED USES

Any use types which are either permitted outright or conditionally permitted as provided by Chapter 50 in the Industrial or Commercial zones shall be permitted provided such uses are primary geothermal process users.

59.440 - CONDITIONAL USES

Residential and commercial uses secondary to an industrial or commercial geothermal use may be permitted conditionally. Such uses are permitted within the Geothermal Overlay Zone when they are found to be (1) necessary for the housing of an employee, employees and their families of an identified process use, and (2) a necessary geothermal use. Commercial and residential uses which are secondary to industrial or commercial uses may be allowed subject to the following:

A. Any request to develop secondary residential or commercial uses shall identify the specific industrial or commercial geothermal use or uses for which the residential and commercial uses are necessary, and shall be supported by appropriate documentation showing that the number of residential units proposed or that the type of commercial uses is necessary, based on the following:

1. Residential

    a. The employment level of the proposes uses; and
    b. The availability of other housing and vacant residential land within a reasonable commuting distance.

2. Commercial

    a. The employment level of the process use or uses;
    b. The availability of other commercial land within a reasonable commuting distance; and
    c. The number of approved residential dwellings found necessary to support proposed or existing geothermal uses.

B. The geothermal Concept Plan may identify the amount and location of secondary residential or commercial uses to be developed; however, no land division for residential or commercial uses shall be approved until after issuance of building permits for the use or uses to which the residential or commercial uses are identified as secondary. No building permits for secondary residential or commercial shall be issued until building permits for industrial or commercial geothermal use have been issued and construction has commenced.

59.450 - PROCEDURE

The application of a Geothermal Overlay Zone to lands within Klamath County shall be accomplished through a change of zone designation, as provided in Chapter 4 combined with approval of a Concept Plan. The applicant may request that approval of the Development Plan and any related preliminary subdivision or partition plans be considered in the same proceeding. If the Geothermal Development Plan contains more than one phase, only the preliminary plat for the first phase needs to be presented for review.

A. Prior to submission of an application for a change of zone designation in order to apply the Geothermal Overlay Zone, the prospective applicant shall submit to the Planning Director a Concept Plan prepared in accordance with the standards provided in Sections 59.460 and 59.470. Upon receipt of the Concept Plan, the Planning Director shall schedule and hold a concept Plan Review Conference with the applicant. At said conference, the applicant or his

authorized agent shall present the Concept Plan and receive comments from County staff attending the conference. Representatives of the Planning Department and the Department of Public Works shall attend and, at the discretion of and as deemed desirable and necessary by the Planning Director, representatives from other County or public departments or agencies may be invited to attend the conference.

B. The review body shall consider the Geothermal Overlay zone change and Concept Plan applications at the same public hearing, pursuant to the procedures in Chapter 4 for zone designation changes. Approval of the zone change and Concept Plan shall be subject to the criteria for approval of a zone change found in Chapter 4 and the criteria for Concept Plan approval found in Section 59.470. If requested by the applicant, the hearing body shall consider the Development Plan and any related preliminary subdivision or partition plans at the same public hearing as the zone change and Concept Plan. Approval of the Development Plan shall be subject to the criteria of Section 59.480.

C. Approval of Development Plans shall also be subject to the criteria of Section 59.440.

D. Preliminary subdivision or partition plans shall be reviewed pursuant to the applicable land division procedures and criteria and must conform to the approved Development Plan.

E. In the case of land zoned Geothermal as of July 1, 1990, the Geothermal Overlay Zone will be implemented by review and approval of a Concept Plan, Development Plan, and preliminary subdivision or partition plans as provided with the above application.

59.460 - CONCEPT PLAN

Prior to submission of an application for a change of zone designation, the prospective applicant shall submit to the Planning Director a Geothermal Concept Plan addressing the requirements of Section 59.460 and the standards in Section 59.470. The Planning Director shall schedule and hold a Concept Plan review with the applicant. At said conference, the applicant or an authorized agent shall present the Concept Plan and receive comments from County Staff attending the conference. Representatives of the Planning Department and the Department of Public Works shall attend, and as deemed desirable and necessary by the Planning Director, representatives from other County or public departments or agencies may be invited to attend the conference.

The Planning Director shall schedule a public hearing for a plan amendment, zone change, and if applicable, an exception to statewide planning goals provided the proposed Concept Plan contains the necessary information. Land designated with

a Geothermal Overlay Zone will not be implemented until the development plan has received approval.

A. DESIGN TEAM:

The Concept Plan and development plan must have stamped or have written approval from at least three of the five following professional disciplines:

1. Registered Architect;
2. Registered Landscape Architect;
3. Registered Engineer;
4. Certified Land Use Planner; and
5. Registered Land Surveyor.

B. CONCEPT PLAN:

The following information must be submitted within the Concept Plan:

1. General Narrative - A generalized narrative describing the:

    a. Location of the site;
    b. Its total acreage;
    c. The existing character, use of the site;
    d. Uses of adjoining properties;
    e. Concept of the proposed development including:

        1) Proposed uses and activities;
        2) Physical land alteration required by the development; and
        3) A detailed description of how the geothermal resource is to be used.

2. General Site Plan - A generalized site plan showing the entire parcel with schematic indications of approximate locations of:

    a. Buildings, including all industrial structures;
    b. Public and private rights-of-way;
    c. Parking and loading areas;
    d. Public and private open spaces; and
    e. Circulation plan.

59.470 - CONCEPT PLAN STANDARDS

The Concept Plan shall be approved or denied based on the following findings of fact:

A. The level of sewer service is consistent with applicable Comprehensive Plan policies for urban or rural areas. Project area soils must be capable of handling

septic and sewage problems commensurate with the size of the proposed development.

B. Soil Stability and Land Stability - If there is a history of unstable soil characteristics in the area, this must be resolved prior to approval. The geologic conditions of the soil must be suitable to accept the development proposed.

   If the proposed development is located on excessive slopes (over 25 percent), the requirements of Article 73 shall be met.

   If the site is within a flood hazard area within Klamath County, conditions as outlined by the Director of Public Works and flood hazard ordinance must be complied with.

C. The level of water service is consistent with applicable Comprehensive Plan policies for rural or urban areas.

   1. If the area is to be served by a public water system or private water system, the system is sufficient to support the proposed development.

   2. If the area is to be served by individual wells, a hydrology report by a registered engineer shall be submitted, showing that the quality and quantity of water on the property are adequate to serve the proposed development.

D. Fire Protection - The proposed development must be within a fire protection district, and the proposed development must have adequate ingress-egress for fire fighting equipment. The circulation plan for the development must have adequate access for fire fighting equipment.

E. Access - The development must be accessible by improved County, State, or private roads.

F. Energy - Conservation issues shall be dealt with and resolved in the best means possible within the development scheme.

G. Effect on Agriculture or Forest Land - Based on the nature of the surrounding resource operations, any additional development cannot create a significant hardship on those surrounding the proposed development.

H. Effect on Goal 5 Resources - Additional development within the site shall have minimum adverse impact on open space, mineral resources, energy sources, fish and wildlife habitat, natural areas, scenic views, water-sheds, historic or cultural areas, existing or potential recreation trails, existing or potential scenic waterways. Compliance with the provisions of Article 57 shall be required.

I. Land Use Conflicts Relating to Industrial/Commercial and Residential Mixes - Where additional residential development would create a significant economic hardship on surrounding industrial or commercial development, additional residential development may be denied.

J. That the property shall be under the ownership or control of a single entity with authority to take all actions and exercise full authority to develop the land.

K. Other Standards - The reviewing body may require that other standards deemed necessary by finds of fact be met (i.e., standards deemed necessary to protect the public health, safety, and welfare or to mitigate impacts on surrounding lands).

59.480 - DEVELOPMENT PLAN

This plan may be submitted at the time the Concept Plan is submitted. If not, it must be submitted prior to actual development.

Approval of the development plan will be made by the Planning Director if there is no major or minor partition or subdivision request within the development plan or any substantial change from the approved Concept Plan.

Development plans which propose major or minor partitioning or subdivision or which propose a substantial change from the approved Concept Plan will be processed pursuant to Chapter 40 of the Land Development Code. Approval or denial of the development plan shall be based on a finding that the following standards have been satisfied:

A. A development scheme which assures that uses are consistent with the approved geothermal Concept Plan;

B. The development scheme must assure that specific uses intended for the property are located in the area most suited for that use in a manner compatible with adjacent uses and consistent with the approved geothermal concept plan.

Information necessary to evaluate the development plan is as follows:

A. Narrative:

1. A statement of location and intensity of proposed uses and activities, including:

2. Public and private open spaces;

3. A physical description of proposed facilities accommodating such uses, including type of buildings, structure;

4. Landscaping;

5. Circulation plan;

6. Statement of location and general configuration of lands to be dedicated for public open space;

7. Other public uses, general description of utilities, general statement of form of site management proposed in areas of significant natural resources;

8. A statement detailing the consistency of the proposed development project with major public development programs, including, but not limited to, freeways, highways, parks, trails, open spaces, utility transmission lines;

9. The phase schedules of proposed major public facilities;

10. Schools, fire protection, police protection, sanitary and water facilities;

11. Where possible, buildings situated on least productive soils;

12. Geothermal process temperature needs of the proposed use(s);

13. Transportation, shipping, and utility needs of the proposed use(s); and

14. Land area needs (developed, expansion, and support areas).

B. Supporting Graphics - A Statement of Intent required above shall be supported by such graphics as are necessary to establish the physical scale and character of the development and demonstrate the relationship among its constituent land uses, buildings and structures, public facilities, and open space. Said graphics as a minimum shall indicate: Perimeter boundaries of the site, streets, driveways, sidewalks and pedestrian ways, and off-street parking and loading areas; location and approximate dimensions of buildings and structures; utilization of buildings and structures; reservations for public uses, parks, and other open spaces; and major landscaping proposals. The Planning Director may require graphics presenting additional information as he determines is necessary to support the Statement of Intent.

C. Description of Surrounding Area - A set of maps and statement providing information on the character and use of the surrounding area.

D. Background Report - The purpose of the Background Report is to collect and present information pertinent to the actual execution and operation of the development. The contents of the Background Report shall be determined during the Concept Plan Review Conference, and may include, but is not limited to, the following information: A preliminary development schedule including

anticipated timing for commencement and completion of each phase of development, tabulation on the total number of acres in each separate phase and percentage of such acreage to be devoted to particular uses; engineering feasibility studies must also be submitted.

59.490 - SITE DESIGN AND DEVELOPMENT STANDARDS

A. Site development standards contained in Chapter 60 for lot size and shape and building setbacks and yards may be waved in a Geothermal Designation providing that the development plan indicates where the site development standards have been modified and should incorporate replacement standards designed to protect the public health, safety, and welfare.

B. Standards for roadways improvement in urban areas contained in Section 71.090 shall apply to roads to be dedicated to the public on the final plat. Standards for roads that are to remain private roads shall meet requirements set by the Planning Commission, subject to a minimum requirement of 50 feet wide right-of-way, 8 inches of base rock, 24 feet wide pavement, and 2 feet wide gravel shoulders for a total improved top width of 28 feet, and adequate drainage facilities as required by the Director of Public Works.

C. Standards for roadway improvement in Rural Areas contained in Section 71.100 shall apply to roads to be dedicated to the public on the final plat. Standards for roads that are to remain private roads shall meet requirements set by the Planning Commission subject to a minimum requirement of a 50 feet wide right-or-way, 22 feet in width improved with a minimum of 6 inches of gravel or cinders and adequate drainage facilities as required by the Director of Public Works.

59.495 - AMENDMENT OF THE CONCEPT PLAN OR DEVELOPMENT PLAN

Any revisions from the approved Concept Plan or Development Plan shall be reviewed by the Planning Director, and may be referred to the Planning Commission as necessary.

ARTICLE 59.8
LIMITED USE OVERLAY (LU)

59.810 - PURPOSE

The purpose of the Limited Use Overlay is to limit permitted uses allowed in the underlying zone to only those uses which are justified in a required "exception statement" or, in the case where a statement is not required, testimony and evidence gathered in the review process, or to prohibit certain uses until allowed by a subsequent post-acknowledgment amendment to remove the Limited Use Overlay.

59.820 - APPLICATION

A. When an "exception" is taken to the Statewide Planning Goals for a comprehensive plan change, the Limited Use Overlay shall apply to the property in question.

B. If an "exception" is not required, the Limited Use Overlay may be applied to the property in question if the review body finds the overlay will further the purpose and intent of the Planning process.

C. Uses permitted in the underlying zone shall be limited to those uses specifically referenced in the comprehensive plan amendment/zone change and the accompanying exception statement, or certain uses shall be prohibited until allowed by a subsequent post-acknowledgment to remove the Limited Use Overlay.

D. The Limited Use Overlay shall not be used to authorize uses not expressly provided for in the underlying zone.

E. The Limited Use Overlay shall apply to the property until it is specifically removed via a subsequent comprehensive plan amendment and zone change.

F. Review Process for Limited Use Overlay approval. The Review Body may always require a Post Acknowledgment Plan Amendment be reviewed periodically to determine if it conforms with the specific purposes of the Limited Use Overlay.

59.830 - PROCEDURE

A. The Limited Use Overlay may be applied through the plan amendment process at the time the underlying plan and zone designation is changed.

B. The Limited Use Overlay may be applied through a zone change process at the time the underlying zone is changed.

C. The order adopting the comprehensive plan amendment/zone change shall specify the permitted use(s) approved, or the uses prohibited, and shall specify the application of the Limited Use Overlay.

D. The permitted uses, or prohibited uses or description thereof, may be qualified as necessary to achieve the intent of the Limited Use Overlay.

59.840 - OFFICIAL PLAN/ZONING MAP

The official plan/zoning map shall be amended to note the application of the Limited Use Overlay to any applicable parcel.

59.850 - SITE PLAN REQUIREMENT

A. In addition to limiting the uses permitted through a comprehensive plan amendment, site plan approval may be required to ensure compatibility of the use(s) allowed with other existing uses in the area.

B. Site plan requirements may be added by specific reference to the adopting order.

C. All other requirements of the underlying zone remain in effect unless specifically altered by site plan approval incorporated in the adopting order.

ARTICLE 59.9
OR 66 GREEN SPRINGS HWY INTERCHANGE AREA MANAGEMENT PLAN (IAMP)

59.910 – PURPOSE

The purpose of the IAMP Overlay Zone is to protect the function of the US97/OR 66 Green Springs interchange and provide safe and efficient connections between all roadways within the vicinity of the interchange. The function of the interchange, located near the southwestern edge of the Klamath Falls area urban growth boundary (UGB), is to: serve local and long distance freight movements by providing a connection between US 97 and the shared alignment of OR 66 and OR 140; provide access to existing local businesses as well as a large amount of developable lands near the interchange, and; provide a connection to greater Klamath Falls for residents living near the interchange.

59.920 – ZONE BOUNDARY

The boundary of the IAMP Overlay Zone is shown on the Klamath County official Zoning Map.

59.930 – APPLICABILITY

The provisions of this Article shall apply to all land use and development applications pursuant to the Land Development Code (LDC), for parcels wholly or partially within the IAMP Overlay Zone, as defined by Section 59.920. The standards of the IAMP Overlay Zone shall supersede where conflicts arise between the standards of the Overlay Zone and those contained within other sections of the Land Development Code.

59.940 – USES PERMITTED

Uses allowed in the underlying zoning district are allowed subject to other applicable provisions in the Land Development Code and Chapter 50, Land Use Zones.

59.950 – ACCESS MANAGEMENT

In addition to the standards and requirements of Article 68 (Off Street Parking and Loading) and Article 71 (Vehicular Access and Circulation), parcels wholly or partially within the IAMP Overlay Zone are governed by the Access Management Plan in the OR 66 Green Springs Hwy Interchange Area Management Plan. The following access approval criteria apply to land use and development applications for parcels within the Overlay Zone that are subject to Section 71.160 (Access Permits).

A. Access to streets and property within the IAMP Overlay Zone shall be subject to joint review by the County and the Oregon Department of Transportation (ODOT) and, where applicable, by the city of Klamath Falls. Coordination of this review will occur pursuant to Section 59.960.

B. Approval of an access permit is based on the standards contained in this section, the provisions of Article 68 (Off Street Parking and Loading) and Article 71 (Vehicular Access and Circulation) in the LDC, and the Access Management Plan in the OR 66 Green Springs Hwy IAMP. Where the recommendations of the Access Management Plan conflict with other access and spacing requirements in Section 71.020, Access Standards, the Access Management Plan shall govern.

59.960 – ADMINISTRATION

The section delineates the responsibilities of the County and ODOT to monitor and evaluate vehicle trip generation on the Green Springs interchange from development approval under this section.

A. Transportation Analysis

1. The applicant shall prepare and submit to the County a traffic impact study (TIS) pursuant to the requirements in Section 71.200 Traffic Impact Study.

2. A TIS will be required for all applications for zone change and/or comprehensive plan amendments located within the IAMP Overlay Zone that result in an increase in trips as compared to the existing land use designation.

3. Land Use applications that require a State Highway Private Approach application may also be required to provide ODOT a TIS, pursuant to OAR 734-051-3030(4).

B. Agency Coordination

1. For land use applications within the IAMP Overlay Zone, the County shall invite ODOT and the City of Klamath Falls to participate in the County's pre-application meeting with the applicant.

2. The County shall provide written notification to ODOT when the application is deemed complete. The County shall also provide written notification to the City of Klamath Falls, the transit agency and other public or quasi-public agencies that serve the IAMP Overlay Zone when the application is deemed complete.

3. ODOT shall have at least 20 days, measured from the date completion notice was mailed, to provide written comments to the County. If ODOT does not provide written comments during this 20-day period, the County staff report will be issued without consideration of ODOT comments.

59.970 – INTERCHANGE AREA MANAGEMENT PLAN REVIEW AND UPDATE

A. IAMP Review Triggers. In order to ensure that the interchange function and capacity is preserved the County, in coordination with ODOT and the City of Klamath Falls, shall undertake a formal IAMP review when the following occurs:

1. Five (5) years has elapsed since the date of the IAMP adoption or since the last update occurred.

2. Comprehensive Land Use Plan Map or Zoning Map amendments that have a "significant effect" pursuant to the Transportation Planning Rule and are proposed for land within the IAMP Overlay Zone or for land outside the Overlay Zone that significantly affect the Green Springs interchange.

B. IAMP Updates

1. If the findings and conclusions from an IAMP review demonstrate the need for an update to the plan, review participants will initiate an IAMP update process pursuant to the provisions of the IAMP.

2. An updated IAMP shall be legislatively adopted, requiring a Board of Commissioners public hearing, as an amendment to the Klamath Falls Urban Area Transportation System Plan and will be adopted by the Oregon Transportation Commission as an update to the Oregon Highway Plan.

CHAPTER 60
PLANNING DEPARTMENT DEVELOPMENT STANDARDS

ARTICLE 60
BASIC PROVISIONS

60.010 - PURPOSE

The purpose of this chapter is to establish standards for the design and development of sites in order to protect the public health, safety and welfare.

60.020 - APPLICATION

The standards established in this chapter shall apply to all new development in Klamath County.

60.030 - DISTINCTION BETWEEN URBAN AND RURAL AREAS

As used in this chapter, urban area means any property or lands located within an Urban Growth Boundary of Bonanza, Chiloquin, Klamath Falls, Malin and Merrill established by a Comprehensive Plan. Rural area means all other property or lands.

ARTICLE 61
LOT SIZE AND SHAPE

61.010 - LOT SIZE AND SHAPE

The lot size, shape and orientation within all subdivisions or partitions shall be appropriate for the location of the subdivision or partition and for the type of development and use contemplated.

A. Lot Width - Each lot shall have a minimum width of 50 feet, unless otherwise specified by this code.

B. Lot Depth - Each lot shall have a minimum depth of 100 feet.

C. Lot Area - Each lot shall have a minimum area as required by the zone unless otherwise specified by this code.

D. Corner Lot - Corner lots shall have a minimum width of 60 feet to permit appropriate building setbacks.

E. Orientation of Side Property Line - As far as practical, the side property line of a lot shall run at right angles to the street upon which it faces, except that on a curved street the side property line may be radial to the curve.

F. Minimum Standards - The minimum standards of this section shall apply except:

   1. In subdivisions or partitions that will not be served by public or private sewer system and central water supply systems, the lots or parcels shall be a minimum of 1 acre in area. Special topography or hydrologic conditions may demand a larger minimum lot or parcel size.

   2. Where property is zoned or deeded for business or industrial use, other widths and area may be permitted. Depth and width of properties reserved or platted for commercial and industrial purposes shall be adequate to provide for the off-street parking and service facilities required for the type of use and development contemplated, as prescribed in Article 68.

   3. Where any parcel of land which is described by a subdivision of the section of which it is a part, or by a government lot number and by the original General Land Office survey contains the minimum acreage required by zoning, shall be considered to meet the minimum lot size regardless of what a later, more accurate survey may reveal. Any parcel which has an existing State, County or public road way or easement, or right-of-way, out of any or all boundaries, shall by definition be considered to meet the minimum lot size.

   4. However, any property divided by the sale or grant of property for state highway, county road, city street or other right of way purposes shall continue to be considered as a single unit of land until such time as the property is further subdivided or partitioned.

61.020 - FLAG LOTS

The use of panhandle or flag lots as a means of access to a lot or parcel shall be permitted only where:

A. The "flagpole" does not exceed a length 2.5 times the average lot width, excluding the flagpole, or twice the depth of the lot, whichever dimension is the lesser.

B. The "flagpole" maintains a constant minimum width of 30 feet.

C. The natural grade of the "flagpole" permits construction of a driveway with a grade not exceeding 12 percent.

D. The driveways or "flagpole" portions of two lots or parcels are not contiguous.

ARTICLE 62
HEIGHTS AND SETBACKS

62.010 - PURPOSE

The purpose of this article is to establish and maintain minimum requirements for structure heights and setbacks from property lines in order to provide a measure of buffering between uses, ensure adequate privacy, maintain safe visibility at road intersections, ensure access to and around buildings, and provide access to natural light, ventilation and sunlight.

62.020 - HEIGHT REQUIREMENTS

A. Height requirements specified in Section 62.040 or Section 62.050 shall be observed unless specified otherwise in Article 58 (Airport Safety Area - Kingsley Field) or in Article 58.4 (Airport Safety Areas - Crescent Lake, Beaver Marsh, Chiloquin and Malin).

B. Except in Airport Safety Areas, height limitations shall not apply to barns, silos, water towers or other farm buildings or structures. Projections such as chimneys, amateur radio towers and antennas, flagpoles and other similar objects not used for human occupancy are likewise not subject to height limitations except within an Airport Safety Area, or unless otherwise specified in the code.

C. The height of a structure or building is to be measured as the vertical distance from the highest point of the structure or building to the average of the highest and lowest points where the exterior walls touch the ground.

62.030 - SETBACK REQUIREMENTS

A. Setback requirements specified in Section 62.040 shall be observed unless otherwise specified in this Article.

B. Architectural features such as cornices, eaves, canopies, sunshades, gutters and chimneys shall not be closer than the minimum allowed by the setback requirement of the zone to the property line.

ORD 45.6 Art. 62.00	Adopt April 3, 1986
ORD 45.6 Art. 62.003(1) & (B)(2)	Adopt April 3, 1986
ORD 45.6 Art. 62.004 (A)(1), (B)(1), & (C)	Adopt April 3, 1986
ORD 45.6 Art. 62.005(A)(1), & (B)	Adopt April 3, 1986
ORD 45.6 Art. 62.007	Adopt April 3, 1986
ORD 45.6 Art. 62.007(F)(2)(A)	Delete April 3, 1986
ORD 45.34 Art. 62.030(B), & (D)	Adopt May 24, 1996
ORD 45.36(B) Art. 62.030(B), & (C)	Adopt December 8, 1998

C. Decks, terraces, steps, or other similar architectural features which are placed upon the ground or finished grade and do not exceed 30 inches in height above the ground or finished grade shall not be closer than 3 feet to a property lot line.

D. The setback of a structure or building is the horizontal distance measured to any part of the structure including Architectural features, from the property line.

62.040 - MINIMUM STRUCTURE HEIGHT AND SETBACK REQUIREMENTS

The following minimum requirements shall be applied to all permitted, conditional and accessory structures allowed by this code unless specified otherwise. All requirements are measured in feet.

PRINCIPLE STRUCTURE REQUIREMENTS
(Special Height and Setback Requirements may apply)

ZONE(s)	STRUCTURE HEIGHT	SETBACKS FRONT	SIDE	REAR
RCR	35	20	5	20
R-10 R-5 R-2 R-1	35	25	10	25
RS	35	25	10	25
RL RM RH	35	20	5	20
CN	25	10	See Section 62.050(C)	
CG CR CT	50	10	See Section 62.050(C)	
IL	50	25	See Section 62.050	
IH	150	25	See Section 62.050	
EFU F FR	--	25	25	25
NR	35	25	25	25
OS&	--	25	25	25
DRO (setbacks not adjacent to a common area)		10	5	5
DRO (setbacks adjacent to a common area)		10	See Section 88.030	

62.050 - MINIMUM STRUCTURE HEIGHT AND SETBACK REQUIREMENTS

A. Accessory Structures and Buildings

1. Accessory structures and buildings allowed by this code greater than 14 feet in height shall meet the setback requirements.
2. Accessory structures and buildings not greater than 14 feet in height may be permitted not less than 5 feet from a side or rear lot line.
3. Accessory structures and buildings shall not be permitted in the side yard abutting a street in corner lots.

B. Corner Lots

1. The side yard setback on the street side of a corner lot shall be 15 feet in R-10, R-5, R-2, R-1, and RS zones.
2. The side yard setback on the street side of a corner lot shall be 25 feet in commercial and industrial zones.
3. The side yard setback on the street side of a corner lot shall be 10 feet in all other zones.
4. The side yard setback on the street side of a corner lot shall be 5 feet in any zone where the lot or parcel is less than 50 feet wide as measured across the front property line.

C. Commercial and Industrial Zone Setbacks

Side and rear setbacks are not required except:

1. For corner lots;
2. Where building codes require a setback;
3. Where a commercial or industrial zoned property abuts a residential zone in which case the minimum setback shall be 25 feet plus 1 foot for each 3 feet of building height greater than 12 feet; or
4. Where a commercial or industrial zoned property abuts an alley or right-of-way, the rear setback shall be a minimum of 10 feet.

D. Distance Between Buildings

1. An accessory building shall be located no closer than 6 feet to the principal dwelling.
2. Any accessory building sheltering livestock or other animals shall be located no closer than 50 feet to any dwelling or other building used for human habitation.
3. Principle residential buildings shall be located no closer than 10 feet or 1/2 the height of the tallest structure, which ever is greater.

4. Nonresidential structures or buildings shall be sited as provided for in the Uniform Building code.

E. Utility or Access Easements

No structure or building shall be built or placed in an utility or access easement. Where an easement conflicts with the allowable setback, a structure or building shall be set back an additional 2 feet from the easement.

F. Setbacks from Waterways

1. Unless otherwise specified by this code, no structure, building, or subsurface septic system shall be located within 100 feet of streams, surface water bodies or wetlands. Measurement of the setback from streams and surface water bodies shall be at right angles to the mean high water line. For an exception to this rule see 57.070 (4)(a).
2. In the case where the mean high water line cannot be established, the Watermaster shall determine the line.
3. Development within 100 feet of streams, surface water bodies or wetlands shall comply with Article 57 - Significant Resource Overlay.
4. Nothing in this subsection shall exempt any development from the requirements of Article 59 - Flood Hazard Area.
5. Notwithstanding this subsection, structures necessary and required to make use of a water right may be permitted within 100 feet of waterways.

G. Setbacks from Resource Lands:

Where rural residential land abuts resource (farm or forestry) zoned lands, the structural setback shall be fifty (50)-feet from the residential property boundary that is contiguous to resource land. Effective from the date of approval of this amendment (ORD. 45.46; Approved June 25, 2002), this provision shall only be required upon final plat approval for land partitions or subdivisions of rural residential land.

62.060 - VISION CLEARANCE

No structure or other visual obstruction shall be created, placed, maintained or allowed to grow between 3 and 10 feet in height within 25 feet of the intersection of the right-of-way lines of two streets, a public street and a private street, or a street and a railroad property line. Height shall be measured from the edge of the improved roadway surface. In accordance with the Type I Administrative Review Procedure, the Planning Director may order the removal or modification of such sight obstructions which conflict with this section. The Planning Director's Order may be appealed pursuant to Article 33.

ARTICLE 63
WIRELESS TELECOMMUNICATIONS FACILITIES

63.010 – PURPOSE

The purpose is to establish and maintain development standards for wireless facilities to provide a service to the public consistent and coordinated with different land uses and zone designations.

63.020 – REVIEW PROCEDURE

A. The applicant shall attend a pre-application conference prior to submission of an application for a wireless telecommunication facility. The pre-application conference will be in conformance with Article 21, Pre-Application Conference Procedure.

B. The review procedure for a wireless telecommunication facility application will be subject to the applicable Conditional Use Permit criteria under Articles 44, 54, 55 & 55.2. A wireless telecommunication facility application will be reviewed and heard by the Hearings Officer.

63.030 – SUBMITTAL REQUIREMENTS

A. A site plan is to accompany the application. The site plan requirements shall be subject to the criteria of Section 41.060 of Article 41.

B. A map that indicates the location of existing and currently proposed telecommunication facilities within a ten mile radius of the proposed site and their approximate distance to the proposed site.

C. A map that indicates the Township, Range, Section and Tax Lot and also the location on map of where the proposed telecommunication facility is to be located.

D. A TOPO map indicating the topography of the site.

E. A letter from the Federal Aviation Administration or the Oregon Department of Transportation Aeronautics Division as to whether or not aviation lighting would be required for the proposed facility.

F. Documentation that there has been a good faith effort using radio frequency maps and coverage objects to co-locate its antennas on existing facilities in the area that is to be served.

G. A photographic simulation of the location site indicating a before picture and an after picture showing how the facility will fit into the surrounding area.

H. A copy of a blank lease form.

63.040 – CONDITIONS OF APPROVAL

A. A bond or other security acceptable to the Hearings Officer shall be required for the removal of the facility until such time the facility is removed. The bond or other security such as; 1) cash or certified check; 2) time deposit certificate payable to Klamath County; 3) savings account assignment to Klamath County. The bond to be reviewed every two years.

B. An approval of a wireless telecommunication facility shall include a condition that if the facility is left unused or is abandoned by all wireless providers located on the facility for more than one year, the facility shall be removed by the applicant within thirty days of being declared abandoned.

C. When required, aviation lighting will use Fresnel lenses or suitable lenses to minimize ground lighting conflicts to the maximum extent regulated by the FAA or ODOT – Aeronautics regulations.

D. When possible, the siting of the facility will utilize existing trees, vegetation, and topo to screen facility from view of nearby residences and roadways.

E. A wireless telecommunication facility shall be vegetated and/or camouflaged to the maximum extent practicable to screen facility from view of roadways and residences.

F. The perimeter of the site plan shall be enclosed by a chain link security fence of not less than eight feet tall, topped by a three-strand barbed wire barrier, and to be erected within a week of construction of the tower.

G. Provide documentation of legal access.

H. The applicant shall file a restrictive covenant with the Klamath County Clerk's Office recognizing the rights of adjacent and nearby landowners to conduct farming & forest operations and prohibit the permit grantee, or successors from filing any complaint of any type concerning accepted resource management practices and farm use.

I. Tower setbacks shall be no less than the height of the tower.

63.050 APPEAL PROCESS

A decision reached under the Hearings Officer review procedure may be appealed to the Klamath County Board of Commissioners within seven days of the mailing of the notification of the final decision as set forth in Article 33.

ARTICLE 64
FENCES, WALLS AND SCREENING

64.010 - PURPOSE

The purpose of establishing and maintaining standards for fences, walls and screening are to protect certain uses from intrusion, to protect the public from uses which may be hazardous, and to increase compatibility of different land uses.

64.020 - VISION CLEARANCE

No fence, wall, hedge, or other visual obstruction shall be created, placed, maintained or allowed to exceed 3 feet in height within 25 feet of the intersection of the right-of-way lines of two streets, a public street and a private street, or a street and a railroad property line. Height shall be measured from the edge of the improved roadway surface. In accordance with the Type I Administrative Review Procedure the Planning Director may order the removal or modification of such sight obstructions which conflict with this section. The Planning Director's order may be appealed pursuant to Article 33.

64.030 - PERMITTED FENCES, WALLS AND HEDGES

A. Fences, walls, and hedges not greater than 3 feet in height shall be permitted on or within front property lines and building setback, provided they do not obscure vision, except that fences may be 6 feet in height if they are constructed of open mesh.

B. Fences, walls and hedges not greater than 6 feet in height may be permitted on or inside any property line, unless otherwise specified in the code.

C. Fences, walls and hedges located on or inside front property lines shall not obscure vision from a public street, road or access to the dwelling or other primary structure on the property, unless otherwise specified in this code.

D. Fences, walls and hedges shall be maintained with public safety and a neat and orderly appearance in mind.

64.040 - SPECIAL HEIGHT ALLOWANCES

Fences not greater than 12 feet in height enclosing an area for business security purposes, or enclosing school or playgrounds may be permitted provided the fence material does not obscure vision from a public street, road or access into the property.

64.050 - SWIMMING POOL FENCING

Private swimming pools shall be fenced to exclude unsupervised access and use by small children. Such fencing shall be a minimum of 5 feet high and shall be equipped with a self-closing and self-latching gate. Latching devises shall be located at a minimum height of 4 feet above the ground.

64.060 - REQUIRED SCREENING

A. A sight obscuring fence or wall at least 8 feet in height is required within side or rear property lines where;

   1. A nonconforming commercial or industrial land use abuts property occupied by a use or activity allowed by the zone; or
   2. A commercial or industrial zone abuts property not commercially or industrially zoned.

B. Outdoor storage in a commercial or industrial zone shall be screened from view on all sides by a sight obscuring fence, wall or hedge at least 8 feet in height.

C. Public or private utility substations shall be screened from view on all sides by a sight obscuring fence, wall or hedge at least 8 feet in height.

D. Outdoor mechanical equipment appurtenant to commercial or industrial uses shall be screened from view from adjacent property or a public street, road or access.

E. Auto wrecking yards shall be totally enclosed by a sight obscuring fence or wall 8 to 15 feet high & no motor vehicles or parts thereof, shall be visible above the site obscuring fence or wall.

ARTICLE 65
LANDSCAPING

65.010 - PURPOSE

The purposes of landscaping requirements are to maintain and enhance the appearance of structures and properties, to provide for visual privacy and a quality visual environment, and to provide areas on sites to absorb rainfall and reduce stormwater runoff.

65.020 - REQUIRED LANDSCAPING

The following uses shall provide for and permanently maintain landscaping as required by this article:

A. New and or expanded uses requiring Article 41 Site Plan approval in all Commercial and Industrial Zones.

B. New and/or expanded Manufactured Home Parks.

C. New or expanded Multifamily Structures and PUDs.

65.025 - LANDSCAPE PLAN

A Landscape Plan, when required for the uses set out in Section 65.020 shall include the following:

B. Tree and shrub planting calculations;

C. Existing vegetation;

D. New plant materials noting location, regionally accepted species and size at planting;

E. Provision for irrigation;

65.030 - LANDSCAPING STANDARDS

A. Coverage - All portions of front, rear, and side yards not covered by a structure or by required parking and access driveways shall be landscaped unless otherwise specified by this code. At least one tree and two shrubs shall be required for each 1,000 sq. ft. of such space or fraction thereof.

B. Parking Areas

   1. Where off-street parking for 10 or more vehicles is required the perimeter of parking areas shall be landscaped.

2. Landscaping shall include 15 square feet for each parking space.

C. Playgrounds - All multifamily dwellings having seven or more dwelling units shall provide a recreation area and suitable playground with recreation equipment on the same lot or parcel as the dwellings. Such areas shall contain a minimum of 20 sq. ft. per dwelling unit with a minimum of 150 sq. ft. Playground equipment shall include at least one of the following for the minimum area site and one additional element for each additional 300 sq. ft: climber, play sculpture, play wall, sand box, slide, balance beam, horizontal ladder, or swings.

D. Materials - Landscaping shall consist of live ground cover, forbs, grasses, shrubs, trees with local climatic conditions should be used. Landscaping may include decorative design elements sufficient irrigation facilities to maintain all vegetation. Native vegetation or vegetation suited to including but not limited to pools, planters, rock gardens or similar elements.

E. Installation - A Performance Agreement pursuant to Article 15 shall be completed as a condition of Planning Department Site Plan Approval providing for the initial installation and maintenance of landscape elements for one year.

65.040 - RESTRICTIONS

A. Landscaping shall not be established or maintained within public right-of-ways or easements without approval of the appropriate entity having control of the right-of-way or easement.

B. The following plants are prohibited from use toward meeting landscaping requirements of this code:

1. Poplars (Populus sp.)
2. Willows (Salix sp.)
3. Elms (Ulmus sp.)
4. Box Elders (Acer negundo)

C. No landscaping feature shall be created, placed, maintained or allowed to grow between 3 and 10 feet in height within 25 feet of the intersection of the right-of-way lines of two streets, a public street and a private street, or a street and a railroad property line. Height shall be measured from the edge of the improved roadway surface. In accordance with the Type I Administrative Review Procedure the Planning Director may order the removal or modification of such sight obstructions which conflict with this section. The Planning Director's order may be appealed pursuant to Article 33.

ARTICLE 66
SIGNS

66.010 - PURPOSE

The purpose of sign regulations is to support the use of signing which is maintained in a safe and attractive condition, and to preserve and enhance the County's visual environment.

66.020 - EXEMPT SIGNS

A. Directional, warning, or information signs required or authorized by law which are installed and maintained by federal, state, county or municipal officials or by utility or railroad companies;

B. Official notices issued by a court or public body and posted in the performance of a public duty;

C. House identification numbers;

D. Personal property signs such as "no trespassing", "no hunting", "no parking"; and

E. Signs that cannot be viewed from a public streets, road or access, signs that cannot be viewed from adjacent properties such as signs inside shopping malls, commercial buildings and structures and stadiums.

66.030 - SIGN STANDARDS

A. On-premise signs may be permitted according to standards identified in this section unless otherwise specified in Section 66.040. All requirements are measured in feet.

BASIC SIGN REQUIREMENTS

(Special Requirements may apply, See Section 66.040)

ZONE (s)	HEIGHT	MAX MAXIMUM SIGN AREA IDENTIFICATION SIGNS/SALES SIGNS
RCR	10 feet	6 square feet/6 square feet
R-10 R-5 R-2 R-1	10 feet	6 square feet/6 square feet
RS RL RM	10 feet	6 square feet/6 square feet
RH	10 feet	36 square feet/6 square feet
CN	20 feet	80 square feet/25 square feet
CG CR CT	30 feet	300 square feet/25 square feet
IL IH	30 feet	300 square feet/25 square feet
EFU F FR NR	10 feet	25 square feet/25 square feet
OS&C	10 feet	25 square feet/ -- -- --

B. Sign area may be allowed in excess of 300 feet in the CG, CT, IL, and IH zones by Type I Administrative Review in accordance with the following building size requirements (all measurements are in square feet).

Building Size:	0-5,000	5,001-10,000	10,001-15,000	>15,000
Sign Area:	300	400	500	600

C. As used in this section, the following definitions shall apply:

1. Identification signs shall mean signs used to indicate the name, address, operation or direction to a business conducted on the property.
2. Sale signs shall mean signs used to advertise property for sale, lease or rent.
3. Premises: (a) The premises on which any activity is conducted is determined by the physical facts rather than property lines. It is the land occupied by the buildings or other physical uses that are necessary or customarily incident to the activity, including such open spaces as are arranged and designed to be used in connection with such buildings or uses; (b) Except for farms and ranches, the following will not be considered to be part of the premises on which the activity is

conducted and any signs located on such land will be considered outdoor advertising signs:

(A) Any land which is not used as an integral part of the principal activity. This would include, but is not limited to: (i) Land which is separated from the activity by a public road; (ii) Land which is separated by an obstruction and is not used by the activity; and (iii) Land that is undeveloped highway frontage adjacent to the land actually used by the advertised activity, even though it might be under the same ownership.

(B) Any land which is used for, or devoted to, a separate purpose unrelated to the advertised activity would not be part of the premises on which the activity is located even though under the same ownership;

(C) Any land which is separated from the principal activity, and is developed or used only at the sign site by structures or uses which are only incidental to the principal activity, and which serves no reasonable or integrated purpose related to the activity other than to attempt to qualify the land for signing purposes;

(D) Where the sign site is located at or near the end of a narrow strip contiguous to the advertised activity, the sign site shall not be considered part of the premises on which the activity advertised is being conducted. A narrow strip shall include any configuration of land which is such that it cannot be put to any reasonable use related to the activity other than for signing purposes except the major entrance or exit roadway to or from the premises which serves only the advertised activity.

D. No sign shall be placed and maintained in public street right-of-way or utility right-of-way or easement.

E. Sign Area -- Sign area is to be calculated as the number of square feet of the smallest rectangle within which the sign can be enclosed as follows:

1. Where a sign has two faces containing sign copy which are oriented back-to-back, the area of the sign is to be measured using the larger of the two faces, if different;

2. Where a sign is composed of letters mounted or painted on a building wall or other architectural feature, the sign area is to be calculated as the smallest rectangle within which all characters and images can be enclosed; or

3. Where a sign consists of one or more three-dimensional objects, the sign area shall be calculated as largest area of a side of a cube enclosing the entire object.

F. Sign Maintenance - All signs and advertising objects shall be maintained in a neat, legible, and orderly condition. All signs pertaining to a discontinued use or activity shall be removed no later than 6 months following discontinuance of the use.

G. Illumination - Illuminated signs shall be lighted by continuous, stationary, shielded light sources directed solely at the sign or internal to the sign. Signs shall be illuminated so as to prevent direct illumination or glare onto any public street or road, or onto adjacent property. Signs consisting of any flashing component shall be prohibited where they are visible from any street or highway.

H. Computerized electronic message boards shall be permitted in conjunction with a commercial use only after approval signature is received from the jurisdiction controlling adjacent rights-of-way.

66.040 - SPECIAL SIGNS

A. Temporary Signs

1. Campaign signs shall meet all sign standards of this code and shall be removed no later than 10 days following the appropriate election date.
2. Construction/Development signs denoting an architect, contractor, developer or owner may be placed on the site of a building or structure under construction or development. No such sign shall be greater than 36 square feet in size and shall be removed upon completion of construction or development.

B. Outdoor Advertising Signs

Not withstanding provisions of ORS Chapter 377, no outdoor advertising sign greater than 300 square feet as defined in this code shall be placed or installed on any lot or parcel that is not zoned for commercial or industrial purposes and is not within a defined UGB or RSC boundary. Total sign area per parcel where the Outdoor Advertising Sign is to be located must not exceed the total sign area allowed under 66.030. Outdoor advertising signs existing as of November l5, 1990, may continue subject to regulation by the Oregon State Highway Division.

C. A-Frame signs may be permitted in any commercial or industrial zone based on the following standards:

1. The sign is not located within a public right-of-way;
2. The sign area does not exceed 10 square feet;
3. The sign advertises goods, products or services which are manufactured, distributed or sold on the premises on which the sign is located.

66.050 - NONCONFORMING SIGNS

A. Any sign existing on or before November 15, 1990, which does not comply with all requirements of this article may be continued as a nonconforming use.

B. Alteration of any nonconforming sign, except to bring the sign into full conformance with this code, shall require a conditional use permit.

66.060 - SIGNS NOT ADDRESSED

Signs not addressed or otherwise regulated by this article may be permitted in any zone by Conditional Use Permit. All standards in this article shall apply.

ARTICLE 68
OFF-STREET PARKING AND LOADING

68.010 - PURPOSE

The purpose of off-street parking and loading requirements is to establish and maintain areas for efficient and convenient parking for residential, civic and commercial uses and to provide a safe means for discharging people and products from ground transportation.

68.020 - GENERAL PROVISIONS

A. No parking area provided for the purpose of complying with the provisions of this code shall be eliminated, reduced or converted to another use unless equivalent facilities are provided in conformance with this article.

B. Additions or expansions of any structure or use on a property shall be accompanied by parking facilities to replace parking lost or achieve conformance with this article.

C. Required parking facilities of two or more uses, structures or contiguous lots or parcels may be satisfied by the same parking facilities used jointly, to the extent that the need for the facilities does not materially overlap and provided that such right of joint use is evidenced by a deed, lease, contract, or similar written instrument establishing such joint use.

D. Space computations for any parking requirements which result in fractional requirements shall be increased to the next higher full digit.

E. Parking requirements for types of buildings, structures, or uses not specifically listed in Section 68.030 shall be determined by the Planning Director according to the Type I Administrative Review Procedure, and be based on the parking requirements of comparable uses listed in this code.

68.030 - OFF-STREET PARKING REQUIREMENTS

A. The following off-street parking requirements shall apply to all buildings, structures, developments and land uses unless otherwise specified in this code.

Single-family,	**2**	**spaces per dwelling unit manufactured home**
Multifamily	**1.5**	**spaces per dwelling unit**
Residential Care	**1**	**space per 4 residents at design capacity**

Religious Assembly	**1**	**space per 4 seats or 8-foot bench or pew in the main assembly.**
Library, Cultural Exhibits	**1**	**space per 400 square feet gross floor area**
Primary and Secondary Schools	**1**	**space per classroom plus 1 space per administrative employee, and 1 space per 6 students design capacity or l space per 4 seats/8 feet of bench in the main auditorium, whichever is greater**
College/trade school	**1**	**space per 1.0 faculty FTE plus 1 space per 5 student FTE design capacity**
Stadium/Fairground	**1**	**space per 4 seats or 1 space per 8 feet of bench, whichever is greater**
Other public assembly recreation, or entertainment	**1**	**space per 4 seats or 1 space per 8 feet 8 feet of bench, or 1 space per 100 feet of gross floor area, which ever is greater**
Heavy Industrial	**1**	**space per each 1.5 employees**
Hospital	**1**	**space per two beds**
Transportation	**1**	**space per 2 employees plus 1 space per 3 departing passengers based on average travel day**
Professional/ Administrative Offices	**1**	**space per employee plus 1 space per 400 square feet gross floor area**
Medical Offices	**1**	**space per employee plus 1 space per 200 square feet gross floor area**
Motel	**1**	**space per guest room**
Retail Sales and Service	**1**	**1 space per 300 square feet of gross floor area**
Retail Sales and Service large items such as furniture and appliances	**1**	**space per 750 square feet of gross floor area**
Shopping Centers/Department Stores	**3.5**	**spaces per 1000 square feet of gross floor area**
Restaurant/Tavern	**1**	**space per 100 square feet of gross floor area**
Warehouse, wholesale, distribution, manufacturing	**1**	**space per employee plus 1 space per commercial vehicle plus 1 space per 700 square feet of patron service area**

B. Carpool and Vanpool Parking. Large employers (those with 50 employees or more working the same hours or shift) shall dedicate 10% of the required parking spaces for carpools and vanpools.

1. These designated spaces shall be the closest parking spaces to the building entrance normally used by employees, with the exception of disabled/handicap accessible parking spaces.
2. Carpool and vanpool spaces shall be clearly marked "Reserved – Carpool/Vanpool only" along with specific hours of use.
3. Any other use establishing carpool and vanpool spaces may reduce the minimum parking requirement by 3 spaces for each carpool/vanpool space created.

C. Transit-related parking reduction. The number of minimum required parking spaces may be reduced by up to 10% if:

1. The proposal is located within a ¼ mile of an existing or planned transit route, and;
2. Transit-related amenities such as transit stops, pull-outs, shelters, park-and-ride lots, transit-oriented development, and transit service on an adjacent street are present or will be provided by the applicant.

D. Bicycle Parking Standards

1. The following bicycle parking standards are applicable only inside an Urban Unincorporated Community or within an Urban Growth Boundary for which Klamath County has jurisdiction. Bicycle parking within the Klamath Falls Urban Area is governed by the provisions of subsections 3 and 4 below.
2. These standards are only applicable to new structural construction or a major remodel exceeding 50% of the assessed value of the existing structure, as determined by KC Assessor Office records.
3. In the Klamath Falls Urban Area, bicycle parking facilities shall be provided for all new or expanded multi dwelling residential, institutional, commercial and industrial uses. Bicycle parking shall be provided as follows:
   a. One bicycle parking space shall be provided for every twelve (12) required off street parking spaces, with a minimum of one bicycle parking space.
   b. Required bicycle parking facilities shall be located no further than fifty feet (50') from a public entrance.

c. Bicycle parking facilities may be provided in a dedicated area within a building that is assessable to bicycle storage.

4. Bicycle Parking Design Guidelines. The following guidelines are applicable to bicycle parking facilities in the Klamath Falls Urban Area:

   a. Bicycle parking facilities shall either be stationary racks, which accommodate bicyclist's locks securing the frame and both wheels or lockable rooms or enclosures in which the bicycle is stored.

   b. Bicycle parking spaces shall be at least six feet (6') long and two feet (2') wide. Upright bicycle storage structures are exempted from the parking space length standard.

   c. A five-foot (5') aisle for bicycle maneuvering shall be provided and maintained beside or between each row of bicycle parking.

   d. Bicycle racks or lockers shall be anchored to the ground surface or to a structure.

Land Use Category	**Minimum Required Bicycle Parking Spaces**	
Multiple family residence	1	space per 4 units
Primary and secondary schools	1	space per classroom
Vehicle spaces for all other uses	1	space per 10 required vehicle spaces for all other uses with a 2-space minimum

68.040 - DISABLED PERSON PARKING

Note: All references delineated with an "*" shall reference ADA Accessibility Guidelines (Federal Register/Vol. 56, No. 173/Friday, September 6, 1991/Rules and Regulations)

A. Number of Spaces

If parking spaces are provided for self-parking by employees or visitors, or both, then accessible spaces complying with 4.6* shall be provided in each such parking area in conformance with the table below. Spaces required by the table need not be provided in the particular lot. They may be provided in a different location if equivalent or greater accessibility, in terms of distance from an accessible entrance, cost and convenience is ensured.

Total Parking Spaces in Lot	Required Minimum Number of Accessible Spaces
1 to 25	1
26 to 50	2
51 to 75	3
76 to 100	4
101 to 150	5
151 to 200	6
201 to 300	7
301 to 400	8
401 to 500	9
501 to 1000	2% of total
1011 and over	20 plus 1 for each 100 spaces above 1000

B. Dimensions
Access aisles adjacent to accessible spaces shall be 60 inches wide minimum, except that one in every eight accessible spaces, and not less than one, shall be served by an access aisle 96 inches wide minimum and shall be designated "van accessible" as required by 4.6.4.* The vertical clearance at such spaces shall comply with 4.6.5.* All such spaces may be grouped on one level of a parking structure. EXCEPTION: Provision of all required parking spaces in conformance with "Universal Parking Design" (see appendix A4.6.3*) is permitted).

C. Passenger Loading Zones
If passenger loading zones are provided, then at least one passenger loading zone shall comply with 4.6.6.*

D. Medical Facilities
At facilities providing medical care and other services for persons with mobility impairments, parking spaces complying with 4.6 shall be provided in accordance with 4.1.2(5)(a)* except as follows:

1. Outpatient units and facilities: 10 percent of the total number of parking spaces provided serving each such outpatient unit or facility;

2. Units and facilities that specialize in treatment or services for persons with mobility impairments: 20 percent of the total number of parking spaces provided serving each such unit or facility.

E. Valet Parking
Valet parking: Valet parking facilities shall provide a passenger loading zone complying with 4.6.6* located on an accessible route to the entrance of the facility. Paragraphs A, B, and C of this section do not apply to valet parking facilities.

F. Signs - A sign shall be posted for each disabled person parking space required by this section. The sign shall be clearly visible, shall be marked with International Symbol of Access, and shall bear the following words in at least 1 inch high letters:

"Parking with D.M.V. Disabled Permit only. Violators subject to towing under ORS 811.620 and a fine up to $250 under ORS 811.625"

G. Location - Parking spaces for disabled persons and accessible passenger loading zones that serve a particular building shall be located on the shortest practicable route to a building entrance.

68.050 - OFF-STREET PARKING FACILITY LOCATION

Parking Area Location - The location of off-street parking and loading facilities shall be in accordance with the following provisions:

A. Required parking facilities for residential uses shall be located on the same lot or parcel of land as the use the parking facilities are intended to serve.

B. Required parking facilities for uses other than residential shall be located as follows:

1. On the same lot or parcel of land as the use such parking or loading facilities are intended to serve.
2. On a lot or parcel of land held under joint ownership, provided such parking or loading facilities relocated adjoining the use or uses served.
3. On a lot or parcel of land separated only by an alley from the lot or parcel or land on which the use or uses served are located, provided:
   a. That said lots or parcels or land are in the same or joint ownership and separated only by an alley;
   b. That direct vehicular access between said lots or parcels of land would be possible in the event the alley as vacated; or
   c. That such parking facilities are in close proximity to the actual use or uses served.

C. Required loading facilities shall be located on the same lot or parcel of land as the uses served.

68.060 - DROP-OFF POINTS

Drop-off Points Required - Parking areas for public assembly facilities are to include a designated on site location for dropping off passengers at the entrance to the facility in advance of parking the vehicle.

Drop-off areas are to consist of vehicle turnout lanes located outside of normal travel lanes. Drop-off points shall be provided for:

A. Hotels and motels;

B. Schools with 50 or more students;

C. Churches with a capacity of 100 or more;

D. Restaurants with a capacity of 50 or more customers;

E. Public transportation terminals;

F. Places of public assembly;

G. Public Buildings; and

H. Offices larger than 5,000 square feet gross floor area.

68.070 - OFF-STREET PARKING DESIGN STANDARDS

All off-street parking areas shall be designed according to the standards of this section.

A. Parking space dimensions - All off-street parking spaces shall be no less than 9 feet by 20 feet in size, except as provided in subsection 1 of this section.

   1. Compact parking space dimension – All off-street parking shall include compact automobile and motorcycle spaces up to 20% of the required number of parking spaces.

   2. Bicycle parking spaces – All required bicycle spaces shall be 6-feet long and 2-feet wide with an overhead covered space clearance of at least 7-feet; and

      a. A 5-foot clear aisle for bicycle maneuvering provided and maintained beside or between each row of bicycle parking.

      b. Bicycle racks or lockers must be securely anchored to the surface or an immoveable structure.

B. The width of aisles between parking spaces - Aisle width between rows of parking spaces shall be no less than:

1. 16 feet between rows of parking spaces angled at less than 30 degrees;

2. 18 feet between rows of parking spaces angled at greater than 30 degrees and less than 60 degrees;

3. 25 feet between rows of parking spaces angled at greater than 60 degrees.

C. Parallel parking spaces - All parallel parking spaces shall be no less than 9 by 22 feet in size. Aisle dimensions between parallel parking spaces shall be no less than 12 feet for one-way aisles and 24 feet for two-way aisles.

D. Parking Access

1. Driveways serving residential uses shall have a minimum width of not less than 9 feet when serving 4 or less dwelling units and a driveway width of not less than 16 feet when serving 5 or more dwelling units or in lieu of thereof, 2 separate driveways not less than 9 feet in width and unobstructed to a height of 8 feet.

2. Driveways serving other than residential uses shall have a minimum width of 15 feet to accommodate one-way traffic and a minimum width of 25 feet to accommodate two-way traffic.

3. Parking areas for 2 or more vehicles shall be designed to prevent or discourage cars from backing out into a public street, public or private pedestrian walk, or public alley, in order to leave the area or to maneuver out of the parking space. Parking lots shall be designed and improved so as to prevent ingress and egress at any point other than designated entrance or exit drives.

4. Access driveways to parking areas containing 4 or more spaces shall be located and designed as follows:

   a. Parking area entrance and exit driveways are to be located a minimum of 50 feet from the nearest street intersection, as measured from the centerline of the driveway to the nearest travel lane of the intersecting street.

   b. Entrance and exit driveways crossing the street property line of a single site are to be limited to 2 along the frontage of a single street. The centerline of driveways on the same property shall be separated by a minimum of 30 feet.

E. Surfacing - All parking areas within the Klamath Falls Urban Growth Area shall be surfaced with an asphalt, concrete, chip seal, brick or other masonry paving units. All parking areas outside the Klamath Falls Urban Growth Area shall be surfaced with a minimum of a crushed rock gravel surface.

F. Lining and Marking - Paved parking spaces shall be marked with paint striping, a minimum of 2 inches in width. Parking spaces in other types of lots may be identified by wheel stop barriers.

G. Wheel Stops - Within the Klamath Falls Urban Growth Area, wheel stops or continuous concrete or asphalt curbing are required in all parking lots to define the perimeter of the parking area and to protect landscaping from vehicle encroachment. Wheel stops shall be constructed as follows:

1. Wheel stops shall be constructed of durable material not less than 6 inches in height. Wheel stops shall be securely installed and maintained as a safeguard against damage to adjoining vehicles, machinery or abutting property.

2. Wheel stops or other vehicle barriers less than 2 feet in height shall be located no closer than 3 feet to any property line.

H. Vertical Clearance - Covered parking spaces shall have a vertical clearance of at least 7'6" above the parking lot surface for all uses except residential.

I. Slope - The finished grade of a parking lot shall not exceed 5 percent slope.

68.080 - OFF-STREET LOADING REQUIREMENTS

Buildings or structures constructed or altered which receive and distribute materials or merchandise by delivery truck shall provide off-street loading berth in the following manner:

A. The number of berths shall be established according to:

Gross Floor Area of Structure	Number of Required Berths
Up to 5,000 square feet	0
5,000 to 20,000 square feet	1
20,000 to 50,000 square feet	2
Greater than 50,000 square feet	1 per each additional 50k sq ft

B. A loading berth shall contain a space not less than 10 feet wide and 50 feet long, and have an overhead clearance of not less than 14 feet. In no case shall a loading berth be designed such that any truck would interfere with a public street.

ARTICLE 69
RURAL/WILDLAND FIRE SAFETY STANDARDS

69.010 - PURPOSE

The purpose of this article is to provide development standards which promote safe and appropriate rural development in areas where wildfire represents a threat to persons and property, and to ensure that rural development does not threaten valuable resource lands or individuals charged with fighting wildland fires.

69.020 - APPLICATION

This article shall apply to all new development zoned Forestry and Forestry/Range, and to all new development in other zoned land located within an area identified as having a medium, high or extreme hazard rating on the Wildland Hazard Ratings map adopted as part of the Klamath County Comprehensive Plan. "New development" includes, but is not limited to individual dwellings and structures, land partitions and subdivisions. New dwellings shall comply with Sections 69.040; 69.050(A), (B), (C); 69.060(B); 69.070; and 69.080. New land divisions shall comply with Sections 69.030; 69.050(D); and 69.060(A).

69.030 - ROAD STANDARDS

A. New subdivision or major land partition developments within a high or extreme fire hazard rating may have no fewer than 2 separate access routes to a county, state, or federal road, and shall be interconnected within the development to eliminate dead end roads. Road access shall be on opposite sides of the development where practicable.

B. Dedicated right-of-ways or private road easements for subdivisions and major partitions within a high or extreme fire hazard rating may be no less than 60 feet wide.

   1. The improved travel surface may be no less than 32 feet wide and improved to county standards for rural roads;

   2. The entire right-of-way shall be maintained as a fuel break free of brush and other flammable materials.

C. Road grades shall not exceed 10 percent.

D. The length of cul-de-sacs shall not exceed 700 feet.

E. Cul-de-sacs shall have a right-of-way with a 50 foot radius and an improved vehicle turning area not less than 80 feet in diameter.

F. Bridges or culverts shall have a minimum load limit of 40,000 pounds (20 tons) and shall not be narrower than the improved travel surface serving each end.

G. Each lot or parcel in a subdivision created under this ordinance shall have direct access to a road meeting the standards of this section.

H. No dwelling will be permitted without proof of legal access.

I. New subdivision developments within a medium fire hazard rating shall meet the road standards set forth in Article 71 of this Code, except for Section 71.100, cul-de-sacs then Section 69.030(D) and (E) shall apply.

69.040 - BUILDING CONSTRUCTION STANDARDS

A. Roofing materials shall carry a minimum of Class B rating. In areas of extreme fire hazard rating, Class A rated roofs shall be required.

B. Manufactured homes shall be fully skirted from the floor-line to the ground-line. Vents or openings in skirting shall be screened with corrosion-resistant mesh with a mesh size not greater than ¼ inch.

C. All dwellings shall install a spark arrest on all chimneys. It shall be constructed of nonflammable, corrosive-resistant material. The opening in the mesh shall be no larger than ¼ inch.

69.050 - WATER SUPPLY SYSTEMS

A. All structural developments shall have a dependable supply of water adequate for normal daily consumption and peak emergency needs. The applicant shall provide evidence that the domestic water supply is from a source authorized in accordance with OAR 690, Division 10 and OAR 690, Division 20 and that any surface water used is not from a Class II stream as defined in OAR 629- 24-101(3).

B. Individual residences: where a permanent source of water with a capacity of 4000 gallons or more at the lowest flow such as a stream, pond, or lake exists within 500 feet of the homesite, road access shall be provided to within 15 feet of the water's edge. Access to water shall be not less than 15 feet wide, shall be an improved and maintained surface and shall have an improved vehicle turning area of sufficient size to accommodate local fire protection equipment.

C. Where residences are supplied with individual water systems without a permanent source of water for fire suppression, the following standards shall apply:

1. At least one 1 inch standpipe shall be provided at least 50 feet from a building and shall have adequate protection from freezing weather. A standpipe shall be located no greater than 10 feet from any driveway.
2. Electrical service to a well pump shall be from independent service drops that do not pass through or onto any building.

D. Fire protection for all new subdivision developments shall be provided by one of the following means as jointly agreed to by the developer and the local fire protection agency, or acceptable alternative approved by the appropriate review body:

1. A centrally located water supply system that will serve both domestic and fire protection needs. The water supply system shall be accessible to fire protection equipment with sufficient flow and a minimum storage capacity of 5000 gallons, or as recommended by the local fire protection agency; or
2. Individual lots shall be supplied via wells with water supply mains not less than 1 inch in diameter and capable of producing not less than 15 gallons per minute at not less than 40 pounds per square inch of water pressure for 1 hour; and
3. Electrical service to a well pump shall be from independent service drops that do not pass through or onto any building.

69.060 - POWER SUPPLY SYSTEMS

A. New subdivisions shall provide underground electrical utilities.

B. All vegetation shall be cleared around existing overhead distribution and feeder lines in a manner that prevents trees and limbs from falling up on lines.

69.070 - FUEL BREAK/PROPERTY DEVELOPMENT STANDARDS

Property fuel breaks, landscaping and maintenance may be planned in accordance with the guidelines found in "Protecting your Home from Wildfire", available from the Planning Department or the Oregon Department of Forestry. The following minimum standards shall apply:

A. Primary Fuel Break: all residences shall create and maintain a primary fuel break not less than 30 feet in width extending from the wall line of the structure. Primary fuel breaks consist of vegetation less than 3 inches high. Isolated landscape trees are acceptable if no branches overhang. Trees shall be thinned to 15 feet between tree crowns, and dead limbs near or over-hanging any structure shall be removed.

B. Secondary Fuel Break: beyond a primary fuel break, residences shall create and maintain a secondary fuel break not less than 70 feet wide on the down-slope side of a residence and 35 feet on all other sides. Extend the fuel break to 100 feet on the downhill side where steep slopes or dense vegetation are

present. Secondary fuel breaks consist of live trees and shrubbery pruned to reduce the possibility of fire reaching roofs of structures or the crowns of trees. Low-growing plants and grasses are to be maintained to prevent the buildup of flammable fuels.

C. Wherever practicable, fences shall be constructed of nonflammable materials and maintained to eliminate the buildup of flammable refuse.

D. Outbuildings and accessory structures will meet the same standards as the residence or primary structure in terms of building construction and fuel breaks.

69.080 - IDENTIFICATION SIGNS

Home identification signs shall be posted at the nearest county, state, or federal road serving the residence, and shall comply with the Klamath County house numbering system in existence. Home identification signs may be constructed of nonflammable materials with letters at least 3 inches high, 1/2 inch line width, and a reflective color that contrasts sharply with the background of both the sign itself and the surrounding vegetation.

CHAPTER 70
PUBLIC WORKS DEPARTMENT
DEVELOPMENT STANDARDS

ARTICLE 70
BASIC PROVISIONS

70.010 - PURPOSE

The purpose of this chapter is to establish standards for the design and development of sites in order to protect the public health, safety and welfare.

70.020 - DISTINCTION BETWEEN URBAN AND RURAL AREAS

As used in this chapter, urban area means any property or lands located within an Urban Growth Boundary of Bonanza, Chiloquin, Klamath Falls, Malin and Merrill established by a Comprehensive Plan. Rural area means all other property or lands.

70.030 - IMPROVEMENT PROCEDURES

The improvements required by this chapter shall conform to the requirements of this code, the **Department of Public Works Standard Drawings**, incorporated into this code by reference as **Appendix A**, as it may be revised, and other improvement standards adopted by the County and shall be in accordance with the following procedures:

A. Construction work shall not be commenced until all required plans, profiles and specifications have been reviewed and approved by the Director of Public Works and appropriate State agencies. As required by the Director of Public Works, plans, profiles and specifications shall be submitted to the Director of Public Works prior to final development approval;

B. Construction work shall not be commenced until the Director of Public Works has been notified; and

C. Required improvements shall be constructed in accordance with the plans, profiles and specifications as approved by the Director of Public Works. If unusual conditions arise during construction, the County may require the developer to amend the plans, profiles or specifications to accommodate such unusual conditions. Any similar changes initiated by the developer must be reviewed and approved in writing by the Director of Public Works. All phases of road construction will be performed under the authority of a Registered Professional Engineer, licensed to practice in Oregon. The Engineer is required to submit as-built drawings and construction certification report to the Department of Public Works within 30 days after the road construction has been completed.

The report will certify that the roads were built with suitable, properly compacted materials to the grade and dimensions specified in the approved plans and specifications, including any approved amendments. The report will also certify that the improvements have been constructed as specified in the approved drainage plans and that runoff water from the development will no adversely affect adjacent property owners. Copies of the material and compaction test results will be included as part of the report.

D. Failure to comply with section 70.030C of this chapter will result in non-issuance of Building Permits and, if applicable, non-acceptance of roads as County Roads.

ARTICLE 71
VEHICULAR AND NON-VEHICULAR ACCESS AND CIRCULATION

71.010 - PURPOSE

The purpose of these standards is to ensure safe ingress and egress to and from properties; to minimize street congestion and traffic hazards; to provide safe and convenient access to businesses, public services, and places of public assembly; and to make vehicular and non-vehicular circulation more compatible with surrounding land uses.

71.020 - ACCESS STANDARDS

A. Vehicular Access - Vehicular access shall be provided to all lots or parcels from a dedicated street. Developments fronting on an arterial or collector street or road may be required to provide a frontage or service road.

B. Director of Public Works Approval - Access to property fronting upon a county or public road shall be subject to the approval of the Director of Public Works.

C. Oregon Department of Transportation (ODOT) Approval - Access to property fronting upon a state highway shall be subject to the permits issued by ODOT.

D. Rural County Road Access Management – Minimum Centerline Spacing Standards

Functional Class	System Spacing	Minimum Spacing	Corner Clearance
Rural Major Arterial	1 mile	1,000 feet	1,000 feet
Rural Minor Arterial	1 mile	500 feet	600 feet
Rural Major Collector	1,320 feet	250 feet	100 feet
Rural Minor Collector	1,320 feet	250 feet	50 feet
Rural Local Street	200-400 feet	75 feet	25 feet

E. Rural County Roads – Residential driveways shall be consolidated when possible; including the use of:

1. Limited access medians on arterial routes.

2. Require right in/right out driveways on arterials or collectors where appropriate.

3. Close and consolidate existing access points within 1,320 feet of interchanges, when possible.

4. Restrict new access within 1,320 feet of interchange ramps.

F. Klamath County Urban Growth Area Access Spacing Standards – All new development and redevelopment shall meet the access spacing standards in Table 4-3 of the Urban Area Transportation System Plan.

G. When the site of development or redevelopment in the Urban Area has frontage on roads with different functional classifications, the site shall take access on the road with the lower functional classification.

H. The County or other agency with access permit jurisdiction may require the closing or consolidation of existing curb cuts or other vehicle access points, recording of reciprocal access easements (i.e., for shared driveways), development of a frontage street, installation of traffic control devices, and/or other mitigation as a condition of granting an access permit, to ensure the safe and efficient operation of the street and highway system. In the Klamath Falls Urban Growth Area, access to and from off-street parking areas shall not permit backing onto a public street.

71.030 - GENERAL ROADWAY DESIGN STANDARDS

The location, width and grade of streets shall be considered in relation to existing and planned streets, to topographical conditions, to public convenience and safety, and to the proposed use of the land to be served by the street. All street improvements shall be designed and constructed in accordance with the Department of Public Works Standard Drawings. The drawings shall include the following:

A. Plan & Profile, Cross-Sections shall be drawn in ink on velum or mylar (minimum 3 millimeter), 24” X 36” “Federal Aid” sheets or the equivalent.

B. Scale and lettering shall be such that all information is clearly legible and shall be approved by the County Engineer.

C. All drawings submitted shall be dated and stamped by a registered, professional engineer licensed to practice in the State of Oregon. Include the subdivision name and tract number, developers name, and a vicinity map.

D. Show typical road design section.

E. Provide signature block for the county engineer.

Each Plan shall contain the following:

1. Existing topographic features including off right- of- way or off site features affecting road and/or drainage design.

2. Proposed improvements or new construction.

3. Proposed drainage facilities.

4. Property lines or lot lines intersecting road right-of-way.

5. Existing utilities.

6. Road names, north arrow, scale, horizontal curve information and stationing.

Each Profile shall contain the following:

1. Existing ground profile at centerline using same horizontal scale as the plan.
2. Proposed finished grade and subgrade at centerline. Show vertical curve information and stationing for finished grade. Profile stationing shall correspond with plan stationing.
3. Proposed drainage facilities with flow line elevations.

Each Cross-Section shall contain the following:

1. Existing ground Cross-Section the full right-of-way width.
2. On minimum 50 foot stationing, at curve points, at intersecting drainages, at intersecting streets and at any other locations critical for design purposes.
3. On a 1 inch grid.
4. The proposed finished grade and subgrade cross-section at the corresponding station with existing ground elevation at centerline and proposed centerline finished grade elevation.

71.040 - MINIMUM RIGHT-OF-WAY WIDTHS

Except as otherwise required by this code, the minimum width of rights-of-way for land partitions, subdivisions and other affected development shall be as follows:

A. Freeways - In accordance with the standards and specifications of the Oregon State Highway Division;

B. Major Highways - 100 feet with improvements in accordance with the standards and specifications of this code;

C. Arterial Street - 80 feet with improvements in accordance with the standards and specifications of the code;

D. Collector Street - 60 feet with improvements in accordance with the standards and specifications of this code;

E. Local Street - 60 feet with improvements in accordance with the standards and specifications of this code;

F. Cul-de-sac Street - 60 feet with improvements in accordance with the standards and specifications of this code; and

G. Private Streets or easements - 30 feet for all land partitions.

H. Recommended Design Standards:

Roadway Design Standards	
Vehicle Lane Widths: (minimum widths)	Truck Route = 12 feet Arterial = 12 feet Collector = 12 feet Local = 10-11 feet Turn Lane = 10-14 feet
On-Street Parking:	Not Applicable
Bicycle Lanes: (minimum widths)	Arterials = 4' paved shoulder Collectors = 4' paved shoulder Curb & Gutter Streets = 5' Standard Bike Lane = 6'
Sidewalks:	Shoulder or separated pathway
Landscape Strips:	Optional
Medians:	Optional
Neighborhood Traffic Management / Traffic Calming:	None
Turn Lanes:	When warranted
Maximum Grade:	Arterials = 6% Collectors = 6% Local Streets = 10%

71.050 - IMPROVEMENTS IN THE KLAMATH FALLS URBAN AREA

The following roadway improvements shall be required for all developments within the Klamath Falls Urban Growth Area unless otherwise specified, and shall be provided at the expense of the developer:

A. All roads that are functionally classified as arterials or collectors shall provide sidewalks and bikeways (e.g. bicycle lanes) on both sides of the roadway, except as determined otherwise by the Director of Public Works. All roads shall be designed and constructed in accordance with Public Works Standard Drawings in Appendix A.

B. As required by the Director of Public Works, all rights-of-way shall be cleared between the catch points of cuts or fills of the approved cross section. The entire right-or-way shall be cleared of all flammable brush, limbs, logs and stumps outside of slope limits to the full width of the right-of-way;

C. When necessary for public convenience and safety, the review body may require pedestrian ways to permit access to cul-de-sacs, to pass through oddly shaped or unusually long blocks, or to provide access to schools, parks or other public or private areas. Pedestrian ways shall be no less than 10 feet in width with an improved surface no less than 8 feet in width, and shall be dedicated to the public.

D. All development shall be designed and constructed in accordance with the Department of Public Works Standard Drawings, as may be revised.

71.060 - IMPROVEMENTS OUTSIDE THE KLAMATH FALLS URBAN AREA

The following improvements shall be required for all developments outside the Klamath Falls Urban Growth Boundary unless otherwise specified in an appropriate Urban Growth Area Management Agreement, and shall be provided at the expense of the developer:

A. A minimum of roadways not less than 32 feet in width improved with gravel and drainage facilities as required by the Director of Public Works shall be provided where the average lot size of the development is not greater than 5 acres;

B. A minimum of roadways not less than 32 feet with a traveled way of 22 feet improved gravel and drainage facilities as required by the Director of Public Works shall be provided where the average lot size of the development is greater than 5 acres;

C. As required by the Director of Public Works, all rights-of-way shall be cleared between the catch points of cuts or fills of the approved cross section. The

entire right-of-way shall be cleared of all flammable brush, limbs, logs and stumps outside of slope limits to the full width of the right-of-way;

D. All development shall be designed and constructed in accordance with the Department of Public Works Standard Drawings, as may be revised.

71.070 - ROADWAY ALIGNMENT

A. The Director of Public Works shall review and approve all roadway alignments;

B. All streets and roads shall be in alignment with existing streets and roads by continuation of the existing centerline or by connection with curves, unless otherwise specified by the Director of Public Works;

C. The intersections of offset alignments shall be spaced not less than 100 feet apart, unless otherwise specified by the Director of Public Works.

71.080 - ROADWAY INTERSECTION ANGLES

The Director of Public Works shall review and approve all roadway intersections, and shall encourage intersection angles as near to 90 degrees as practicable with 50 foot tangent adjacent to the intersection based on topography and other relevant factors.

71.090 - ROADWAY GRADES AND CURVES

A. Roadway grades shall not exceed:

   1. 6 percent on major or arterial streets or roads;
   2. 10 percent on all other streets or roads.

B. Centerline radii of curves shall not be less than:

   1. 300 feet on major or arterial streets or roads;
   2. 200 feet on collector streets or roads;
   3. 100 feet on all other streets or roads.

71.100 - CUL-DE-SACS

A. The length of a cul-de-sac shall be measured along the centerline of the roadway from the right-of-way line to the farthest point of the cul-de-sac.

B. All cul-de-sacs shall terminate with a circular turn around having a right-of-way not less than 50 feet radius and an improved turnaround of not less than 40 feet radius, unless otherwise specified in this code.

C. In urban areas a cul-de-sac shall not exceed 500 feet in length or serve more than 18 dwelling units. The review body may require a pedestrian way or bikeway between the cul-de-sac and adjacent streets in order to enhance accessibility and connectivity. Pedestrian ways shall be no less than 10 feet in width with an improved surface no less than 8 feet in width, and shall be dedicated to the public.

D. In rural areas, a cul-de-sac shall not exceed 700 feet in length, unless otherwise specified in this code.

E. The maximum grade of a cul-de-sac turnaround shall not exceed 3%.

71.110 - EXISTING STREETS

Whenever existing streets, whether adjacent to or within the development, are of inadequate width, the additional necessary right-of-way within the development boundary shall be dedicated at the time of the land division.

71.120 - RESERVE STRIPS AND STREET PLUGS

Reserve strips or street plugs dedicated to Klamath County may be required by the appropriate review body or Director of Public Works in order to control access to adjoining property or prevent substandard road development.

71.130 - FUTURE STREET EXTENSIONS

When necessary to permit appropriate future development of adjoining land, streets or roads may extend to the boundary of the development. Street and roads extending to the boundary of the development shall terminate with an improved vehicle turnaround not less than 40 feet radius, and shall require dedication of a street plug.

71.140 - HALF STREETS

When necessary to permit appropriate future development of adjoining land, a half street may be approved by the Director of Public Works and the appropriate

review body. Reserve strips and street plugs may be required to achieve the purpose of this section.

71.150 - BLOCKS

A. The length, width and shape of blocks shall be designed with regard to providing a safe and efficient layout of building sites when considering topography, access, circulation and safety.

B. Blocks shall not exceed 1,320 feet when measured from road centerline to road centerline. In the Klamath Falls Urban Growth Area, block length shall not exceed 600 feet to improve connectivity for vehicular and non-vehicular traffic.

71.160 - ACCESS PERMITS

A. Prior to the construction of any driveway or road which connects with a public or county road, a permit shall be obtained from the Director of Public Works.

B. Prior to construction of any driveway or road which connects with a state highway, a permit shall be obtained from the State Highway Division.

71.170 - UTILITY PLACEMENT IN RIGHT-OF-WAYS

The location and installation of underground utilities, sewers, and drains installed below streets or roads shall be approved by the Director of Public Works. Installation shall be completed prior to road surfacing, and all individual service connections shall be of sufficient length that will obviate any need for street cuts when service connections are made.

71.180 – MANUFACTURED/MOBILE HOME PARK STREETS

The following roadway improvements shall be required for all Manufactured/Mobile Home Parks within Klamath County and shall be provided at the expense of the developer.

A. Minimum street widths shall be in accordance with the appropriate state statutes.

B. Streets shall have two sidewalks, each at least five feet in width, each with some form of either vertical or horizontal separation from the street.

71.190 – NON-VEHICULAR ACCESS AND CIRCULATION

A. For new commercial, light industrial, and multi-family residential development, internal pedestrian circulation shall be provided through sidewalks and walkways/pathways, pursuant to the following standards:

1. Walkways shall be provided connecting building entrances and streets adjoining the site.
2. Connections shall be direct and driveway crossings minimized.
3. Walkways shall be at least five-feet-wide, raised, include curbing, or have different paving material when crossing driveways.
4. Pedestrian connections to adjoining properties shall be provided except where such a connection cannot be accommodated due to topographical constraints or where existing development on adjacent sites preclude connections. Pedestrian connections shall connect the on site circulation system to existing or proposed streets, walkways, and driveways that abut the property. Where adjacent properties are undeveloped or have potential for redevelopment, streets, accessways and walkways on site shall be laid out or stubbed to allow for extension to the adjoining property.

B. Transit Access. New commercial and light industrial buildings within 600 feet of an existing or planned transit facility, as identified in the Urban Area TSP, shall provide for pedestrian access to transit through the following measures:

1. Either locate buildings within 20 feet of the transit facility, a transit street, or an intersecting street or provide a pedestrian plaza at the transit facility or a street intersection;
2. Provide a reasonably direct pedestrian connection between the transit facility and building entrances on the site;
3. Provide a transit passenger landing pad accessible to disabled persons;
4. Provide an easement or dedication for a passenger shelter if requested by the transit provider; and
5. Provide lighting at the transit facility.

71.200 – TRAFFIC IMPACT STUDY

A. A traffic impact study shall be developed by a Professional Engineer under any of the following conditions:

1. The proposed development generates 50 or more peak-hour trips or 500 or more daily trips.
2. An access spacing exception is required for the site access driveway(s) and the development generates 25 or more peak-hour trips or 250 or more daily trips.

3. The proposed development is expected to impact intersections that are currently operating at the upper limits of the acceptable range of level of service during the peak operating hour.
4. The proposed development is expected to significantly impact adjacent roadways and intersections that have previously been identified as high crash locations or areas that contain a high concentration of pedestrians or bicyclists such as school zones.
5. Major construction projects anticipated to have temporary traffic impacts or cause disproportionate damage on existing infrastructure, as determined by the Public Works Director.

B. Submittal requirements: The study shall include the following minimum requirements:

1. The analysis shall include alternates other than what the developer originally submits as a proposal for access.
2. The analysis of alternate access proposals shall include:
   a. Existing daily and appropriate design peak hour counts, by traffic movements, at intersections that would be affected by traffic generated by the development.
   b. Projected daily and appropriate design peak hour volumes for these same intersections and at the proposed access points after completion of the development. If the development is to be constructed in phases, projected traffic volumes at the completion of each phase shall be determined.
   c. Trip Generation shall be calculated using the Institute of Transportation Engineers' manual "Trip Generation – 5th Edition" or other, more current, and/or applicable information.
   d. A determination of the need for a traffic signal based on warrants in the "Manual on Uniform Traffic Control Devices".
3. The internal circulation of parking lots must be analyzed to the extent that it can be determined whether the points of access will operate properly.
4. An analysis of the impacts to neighboring driveway access points and adjacent streets affected by the proposed new development driveways.
5. A discussion of bike and pedestrian use and the availability of transit to serve the development.

6. The recommendations made in the report shall be specific and based on a minimum level of service when the development has been completed. As an example, if a traffic signal is recommended, the recommendations should include the type of traffic signal control and what movements should be signalized. If a storage lane for right turns or left turns is needed, the recommendations should include the amount of storage needed. If several intersections are involved for signalization, and an interconnected system is considered, specific analysis should be made concerning progression of traffic between intersections.

C. Review criteria and procedure. The following criteria should be used in reviewing a transportation impact analysis:

1. The road system is designed to meet the projected traffic demand at full buildout.
2. Proposed driveways do not adversely affect the functional characteristics of the surrounding roadways.
3. Adequate intersection and stopping signt distance is available at all driveways.
4. Proposed driveways meet the County's access spacing standard or sufficient justification is provided to allow a deviation from the spacing standard.
5. Opportunities for providing joint or crossover access have been pursued.
6. The site does not rely upon the surrounding roadway network for internal circulation.
7. The road system provides adequate access to buildings for residents, visitors, deliveries, emergency vehicles, and garbage collection.
8. A pedestrian path system is provided that links buildings with parking areas, entrances to the development, open space, recreational facilities, and other community facilities in accordance with the state Transportation Planning Rule.

D. Conditions of Approval. As part of every land use action, Klamath County and the City of Klamath Falls, and ODOT (if access to a state roadway is proposed) will be required to identify conditions of approval needed to meet operations and safety standards and provide the necessary right-of-way and improvements to develop the future planned transportation system. Conditions of approval that may apply include:

1. Crossover easement agreements for all adjoining parcels to facilitate future access between parcels.

2. Conditional access permits for new developments which have proposed access points that do not meet the designated access spacing policy and/or have the ability to align with opposing access driveways.
3. Right-of-way dedications for future planned roadway improvements.
4. Half-street improvements along site frontages that do not have full-buildout improvements in place at the time of development.

ARTICLE 72
STREET NAMES, NUMBERS AND SIGNS

72.010 - STREET NAMES

Except for extensions of existing streets or roads, no street name shall be used which is the same as, similar to, or pronounced the same as any existing streets or road in Klamath County.

72.020 - STREET NUMBERS

Street names and numbers shall conform to the established pattern for street numbers in Klamath County, and must be reviewed and approved by the Director of Public Works.

72.030 - STREET SIGNS

The developer shall deposit with the County, funds determined by the Director of Public Works to be sufficient to cover both the cost of materials and the cost of installation of street signs. Street signs shall be installed by the County.

ARTICLE 73
SITE DRAINAGE

73.010 - PURPOSE

Standards and criteria for site drainage provide for the design of projects so as to minimize the harmful effects of storm water runoff and resultant inundation and erosion from projects, and to protect neighboring downstream and downslope properties from drainage impacts.

73.020 - DRAINAGE PLAN REQUIREMENTS

A drainage plans may be required by the Planning Director or the Director of Public Works for any development or land use which:

A. Involves a land disturbance through grading, excavation or paving on lands with slopes in excess of 10 percent;

B. Involves a land disturbance through grading, excavation or paving of an area that might reasonably be expected to impact drainageways;

C. Involves a proposal that will create impervious surfaces of such extent that might reasonably be expected to impact drainageways;

D. Involves land subject to local ponding due to soil or topographic conditions; or

E. Involves land located in an area with a history of flooding, or may be subject to flooding.

73.030 - DRAINAGE PLAN PREPARATION

Drainage plans shall be neatly and accurately drawn, at a scale that will enable easy identification of required information. The Director of Public Works may require plans to be prepared by a Registered Civil Engineer.

A. A drainage plan shall include the following information:

1. Flow lines of surface waters onto and off the site;
2. Existing and proposed contours at 2 foot intervals;
3. Location and amount of cuts, fills or contouring;
4. Existing and proposed drainage ways;
5. Building corner and street elevations for existing and proposed improvements;
6. Existing and proposed retaining walls;
7. The location and design of facilities for storage or conveyance of surface water runoff; and
8. Estimates of existing and proposed runoff on the site.

B. Engineered Drainage Plans shall include an evaluation of the effects of projected runoff on adjacent proper ties and existing drainageways.

73.040 - DRAINAGE PLAN REVIEW

The Director of Public Works shall review each drainage plan and recommend appropriate measures to the appropriate review body. The Director of Public Works may require the installation or construction of certain improvements as required to prevent adverse runoff. The Director of Public Works may enter into an agreement with the developer for the installation of improvements pursuant to Article 15.

73.050 - DRAINAGE SYSTEM STANDARDS

Drainage systems and facilities required by the Director of Public Works shall be designed and constructed according to standards determined by the Director of Public Works.

ARTICLE 74
URBAN AREA AND RURAL SERVICE CENTER WATER, SEWER AND FIRE PROTECTION SERVICE

74.010 - WATER SERVICE

A. Development within urban areas shall be served by a central public domestic water supply system or by a central private water supply corporation which has been certified by the County Health Department or the Oregon Health Division as adequate to provide for the health and sanitation needs of the area.

B. Private water supply systems shall conform to the service standards of the preferred provider as identified in the respective Urban Growth Area Management Agreement.

C. Fire hydrants shall be required, and shall meet the standards of the preferred provider.

74.020 - SEWER SERVICE

A. Development within urban areas shall be served by a public sewage disposal system or by a private sewage service district or corporation which has been approved by the Oregon Department of Environmental Quality as adequate to provide for the health and sanitation needs of the area.

B. Sewer Systems shall be installed in accordance with state and federal requirements, and must conform to the service standards of the preferred provider as identified in the respective Urban Growth Area Management Agreement.

74.030 - SERVICE WITHIN WATER OR SEWER DISTRICTS

In addition to other requirements specified in this article, new development within an existing water or sewer district shall meet the requirements of the preferred provider with respect to the provisions of water and sewer service.

ARTICLE 75
RURAL AREA WATER AND SEWER SERVICE

75.010 - WATER SERVICE

A. Development in rural areas may utilize either a central water supply system or an individual or shared water system, such as wells, springs, surface water, or cisterns – at the option of the developer. Any water service must be legal and obtain approval from the appropriate agency, as required by law.

B. Central water systems to any development must be certified by the County Health Department or Oregon Health Division as adequate to proved for the health and sanitation needs of the area.

C. New developments not providing a central water system shall submit a written hydrology report prepared by a registered engineer at the time of submittal of a preliminary subdivision plat or planned unit development concept plan. The hydrology report shall document the quantity and quality of water in the vicinity based on the general history of wells in the area.

75.020 - SEWER SERVICE

Subdivisions or other developments in rural areas may use central sanitary sewer systems or on-site septic systems as provided for in the following manner:

A. A certification by a city-owned sewage disposal system or by a privately owned sewage disposal system that is subject to regulation by the Oregon Public Utility Commission that sewage disposal will be available to the lot line of each lot depicted on a subdivision plat or other development plan; or

B. A bond, contract or other assurance by the developer to the city or county that a sewage disposal system will be installed by or on behalf of the developer to the lot line of each lot depicted on a subdivision plat or other development plan. The amount of such bond, contract or other assurance shall be determined by a registered professional engineer, and shall be subject to any change in such amount as the city or county considers necessary; or

C. In lieu of subsections A and B of this section, a statement that no sewage disposal facility will be provided to the purchaser of any lot depicted on a subdivision plat or other development plan, where the Klamath County Department of Health Services or Oregon Department of Environmental Quality has approved method of sewage disposal for the subdivision or development in its evaluation report described in ORS Chapter 454. A copy of any such statement, signed by the developer and endorsed by the city or county shall be filed by the developer with the Real Estate Commissioner and shall be included in the public report made for the subdivision or development under ORS Chapter 92.

75.030 - SERVICE WITHIN WATER OR SEWER DISTRICT

In addition to other requirements specified in this article, new development within an existing water or sewer district shall meet the requirements of the preferred provider with respect to the provision of water or sewer service.

ARTICLE 76
UTILITIES

76.010 - UTILITIES IN URBAN AREAS

On-site utility service connections in urban areas shall be installed in accordance with the appropriate standards of the preferred service provider.

76.020 - UTILITIES IN RURAL AREAS

On-site utility service connections in rural areas shall be installed in accordance with the appropriate standards of the preferred service provider.

76.030 - UTILITY EASEMENTS

Easements for sewers, storm drainage, water mains, electrical lines or other public utilities shall be dedicated wherever necessary. Easements shall be a minimum of 16 feet in width and centered on rear or side lot lines except for tieback easements which shall be 6 feet wide by 20 feet along side lot lines at change of direction points of easements.

ARTICLE 77
SOLID WASTE

77.010 - APPLICATION

Within the Klamath Falls Urban Growth Area all uses which create a need for solid waste or recycled material collection shall conform to the standards of this article.

77.020 - COLLECTION STANDARDS

A. Outdoor solid waste or recycled material collection areas which utilize dumpsters or other containers with a total capacity greater than 66 gallons shall be screened from view from a public street or adjoining property.

B. The receptacle(s) for solid waste or recycled material collection shall be containerized and covered.

C. The contractual arrangement for collection shall provide for keeping the immediate areas surrounding the collection site clean and free of debris.

CHAPTER 80
SPECIAL USE STANDARDS

ARTICLE 80
BASIC PROVISIONS

80.010 - PURPOSE

The purpose of this chapter is to establish supplementary property development standards for land uses that present unique or complex land use planning opportunities or constraints.

80.020 - APPLICATION

The standards in the chapter relate to the special characteristics of the uses and, unless otherwise specified, are to be applied in addition to all other applicable standards prescribed in this code. In the event that the standards contained in this chapter differ from other applicable standards of this code, the more stringent standards shall apply.

ARTICLE 81
MINERAL AND AGGREGATE EXTRACTION STANDARDS

81.005 - PURPOSE

The purpose of this Article is to implement Article 57, the Significant Resources Overlay zone, to allow mineral and aggregate mining, processing, storage and stockpiling on all sites which are listed as 2A, 3A, or 3C on the acknowledged Klamath County Goal 5 Resources Inventory. This Article shall set out the standards to be used when reviewing an application for a development permit on any site listed as 2A, 3A, or 3C on the acknowledged Klamath County Goal 5 Resources Inventory. Article 57 is applied to a mineral and aggregate site using the procedure outlined in Section 57.080 and through a comprehensive plan and zone amendment as part of the Periodic Review process. This Article shall also serve as the standards to be used when reviewing mineral and aggregate mining, processing, storage and stockpiling either as a permitted use or a conditional use as allowed by the zoning on the parcel, on all sites which are listed as 1A, 1B or 3B on the acknowledged Klamath County Goal 5 Resources Inventory.

81.010 - GOAL 5 STANDARDS

A. The impact area for a mineral or aggregate site is divided into two sections as follows:

   1. The extraction area and the impact area may consist of one or more tax lot(s) or portions of single tax lots and may be applied to contiguous properties under different ownership. Both must be described by a legal description and drawn to scale on a map;
   2. The extraction area is the actual extraction, processing, and stockpile site as described by a valid Department of Geology and Mineral Industries (DOGAMI) operating permit or reclamation plan, the ESEE on a site which is on the Goal 5 inventory, or the site as described by a Conditional Use Permit application.
   3. The impact area shall be applied to properties or portions of properties adjacent to and immediately surrounding the extraction area.
      a. The minimum width of the impact area shall be 1000 feet from the boundaries of the mineral or aggregate extraction area. The 1000 foot distance may be decreased by either:
         1) A written agreement between the owner of a sensitive or conflicting use and the owner or operator of the mineral or aggregate extraction site. The agreement shall be notarized, recorded with the County Clerk and on the property deed, and shall run with the land. A copy shall be filed in the Planning Office.

2) As described and for reasons addressed in the site specific ESEE.

b. The decision to reduce or expand an impact area shall be based on the type of mineral and aggregate resource to be extracted, the mining method and type of processing, and the physical features of the surrounding area.

c. The minimum distance allowed by this procedure is 100 feet from the boundary of the extraction area to the conflicting use.

d. Applications for new or expanded uses within the impact area shall be processed under Section 57.030 and shall be required to sign a waiver of remonstrance to use, activation, or change in the use of a mineral or aggregate site. The waiver of remonstrance shall be notarized, recorded with the County Clerk and on the property deed, and shall run with the land. A copy shall be filed in the Planning Office.

e. The owner and operator (if any) of the mineral or aggregate site shall receive notice of any application for new or expanded sensitive or conflicting uses within the impact area.

4. Sensitive or conflicting uses are listed in 57.040(A).

B. The quality of the rock, basalt, aggregate or similar material used in road construction, located in the site, should meet or exceed the following standards for it to be determined significant:

1. Abrasion (AASHTO T96, OSHD TM 211): Loss of not more than 35% by weight;
2. Oregon Air Degradation (OSHD TM 208): Loss of not more than 35% by weight; and
3. Sodium Sulphate Soundness (OSHD TM 206): Not more than 17% by weight.

C. The significance of unique or common material including, but not limited to; Pumice, Cinders, Clay, Diatomaceous Earth, Andesite, Sand and Gravel, Borrow shall be considered on a case-by-case basis when:

1. The owner/operator of the site can show that a market exists for the resource being mined; or
2. The owner/operator has test data on the resource.

D. The test data and other information on quality and quantity must be submitted by a certified geologist, mining engineer, registered professional civil engineer or qualified engineering testing firm.

81.020 - APPLICATION

A. The following activities shall be exempt from the standards set forth in this section in accordance with ORS 517.750(15) and ORS 215.298:

   1. The proposed operation will not extract::

      a. EFU zone: more than 1,000 cubic yards of material, or disturb more than 1 acre of land;

      b. Other zones: more than 5,000 cubic yards of material, or disturb more than 1 acre of land within a period of 12 consecutive months;

   2. Excavations less than 5000 cubic yards of sand, gravel, clay, rock or other similar materials by the owner or tenant of a parcel for the construction, maintenance or re-construction of on-site access roads.

   3. Excavations or grading of a parcel conducted in the process of farming, forestry, and cemetery operations.

   4. The owner or operator of the parcel may be asked to substantiate an exemption claim.

B. Preexisting mineral and aggregate operations must meet one of the following criteria to be exempt from the requirements of this Article:

   1. The operator has a valid DOGAMI permit or County permit issued on or prior to the effective date of the adoption of Article 81; or

   2. The site is listed as a 2A, 3A, or 3C site on the Goal 5 Mineral and Aggregate Inventory as of February, 1992; or

   3. The owner or operator can establish the existence of the site prior to the implementation of zoning regulations and can establish that the site has been operated in the last calendar year and meets the criteria set out under Section 13.060 of this code.

C. Expanding a preexisting site shall be subject to the requirements of this Article if the expansion will include use of additional acreage beyond that originally permitted by DOGAMI or the County permit or identified on the ESEE for the site.

D. Preexisting sites may continue to operate subject to the terms and conditions (if any) of the original approval and the then existing Article 81, and are exempt from the requirements of Article 81, as amended on March 31, 1992, for as long as they are able to operate and maintain the preexisting status.

E. All new and proposed mineral and aggregate sites shall be subject to these requirements.

F. Mining or gravel extraction auxiliary to forest practices are exempt from the requirements of this Article.

G. Resumption of operation at an inactive surface mining site may be resumed without additional regulation under this code provided that the operation has maintained, on a continuous basis, a valid permit from the Oregon Department of Geology and Mineral Industries and other regulating authorities or a valid County Conditional Use Permit. Resumption of operation shall be subject to original conditions of approval and the Type II Administrative Review procedure.

H. Resumption of an operation where a state or county permit has at any time expired or has otherwise been invalidated shall constitute a new operation and be subject to all applicable requirements of this code.

81.030 - PROCEDURE

A. New or expanded mineral or aggregate mining, processing, storage and stockpile sites added to the Goal 5 Mineral and Aggregate Inventory as 2A, 3A, or 3C sites with a development permit application, shall obtain a site plan approval processed using a Type I Review Procedure as set out under Section 22.030 of this Code.

B. New or expanded mineral or aggregate mining, processing, storage and stockpile sites added to the Goal 5 Mineral and Aggregate Inventory as 2A, 3A, or 3C sites without a development permit application, shall obtain a site plan approval processed using a Type II Review Procedure as set out under Section 22.040 of this Code.

C. New or expanded aggregate mining, processing, storage and stockpile sites added to the Goal 5 Mineral and Aggregate Inventory as 2A, 3A, or 3C sites within an EFU zone shall obtain a site plan approval processed using a Limited Land Use procedure as set out under House Bill 2261.

D. All sites which hold valid DOGAMI permits when added to the Goal 5 Mineral and Aggregate Inventory as 2A, 3A, or 3C sites, shall not be required to obtain a site plan approval unless the extraction area is to be expanded beyond the boundaries established in the DOGAMI permit.

E. The application for the review of a development permit shall contain the following:

1. A completed application form; and
2. A site plan with the location of the extraction area, any related processing, storage and stockpiling sites clearly delineated, that the standards set out in 81.050 have been met and that all requirements of a site specific ESEE have been met; and

3. A complete description of how all the standards set out in Article 81.050, and any site specific ESEE requirements have been met.

F. The review authority shall approve the site plan upon a finding that the proposed or expanded site:

1. Meets all the standards set out under Section 81.050 of this Code; and
2. Any site-specific requirements contained in the ESEE are met and satisfied.

81.040 - REVIEW PROCEDURE AND CRITERIA FOR CONDITIONAL USE PERMITS

A. Where the underlying zone lists mining as a conditionally permitted use, and the mineral and aggregate site is listed on the Goal 5 Mineral and Aggregate inventory as 1-A or 1-B, mining operations may be allowed by conditional use permit, and shall be processed as follows:

1. The application of the Mineral and Aggregate Extraction standards shall be accomplished by a Conditional Use Permit as provided in Article 44 of this code.
2. Notification procedures for the purpose of establishing a mineral extraction operation in a zone for which it may be conditionally approved shall differ from Article 32 to require notification of property owners within 1000 feet of the subject property.
3. Applicants for a conditional use shall prepare and submit a statement that documents the nature of the mining activity. The statement shall include:
   a. Method(s) of production, including types of equipment to be used, hours of operation, access to and from the site, and the anticipated annual extraction;
   b. Availability of water for dust abatement and reclamation purposes;
   c. Methods to be employed to minimize visual, dust and noise impacts to surrounding properties, including, but not limited to, utilizing natural landforms and existing vegetation, the placement of landscape or earthen berms, and a vegetative planting scheme; and
   d. Other information deemed necessary by the planning department to review the proposal.

B. In addition to the general criteria in Section 44.030, the following findings must be made for a Conditional Use Permit for mineral or aggregate extraction:

1. That the site will be operated in accordance with applicable state and/or federal regulations.
2. Standards specified in Section 81.050 are, or will, be met..
3. That the proposed access is engineered to accommodate any increased volume of traffic.
4. That the proposed access can safely handle the type of increased traffic flow which will accompany the development without significantly endangering the public health, safety or welfare.
5. That an adequate water supply is available to the site. (For dust control, required landscaping, reclamation, etc.)
6. That blasting which may be necessary will not damage existing structures or facilities (including wells). In lieu thereof, a bond or certificate of insurance the amount to be determined at the time of the review, shall be provided.

81.050 - DEVELOPMENT AND SITING STANDARDS

All operations, except those lawfully established preexisting uses or those preempted by the Oregon Forest Practices Act, shall meet the following standards:

A. The landowner and operator shall be held jointly responsible for the operation of a mineral extraction site.

B. Visual quality.

1. Existing trees and other natural vegetation bordering adjacent public land or a non-resource (urban or rural) zoning district shall be preserved to screen the view of any mineral or aggregate activity including equipment, from any conflicting or sensitive use within the impact area;
2. If vegetation or landforms do not provide acceptable screening to adjacent public land or nonresource zoned property, appropriate screening shall be provided at the property boundary or nearer to the site. Such screening shall be in the form of a fence, wall, landscaped berm, or natural vegetative cover to supplement any natural screening. The type of screening to be used shall be decided as a function of a site specific ESEE or a Conditional Use Permit;
3. Screening may not be required when the natural topography of the site offers sufficient screening to screen the view of any mineral or aggregate activity including equipment, from any conflicting or sensitive use within the impact area. This shall be decided as a function of a site specific ESEE or a Conditional Use Permit;

C. Water Quality.

1. All mineral and aggregate extraction sites shall show proof of a valid Oregon Department of Environmental Quality and/or Oregon Department of Water Resources permit when applicable which shall be decided as a function of a site specific ESEE or a Conditional Use Permit;
2. The operator shall not cause a change in the location of any stream channel or wetland without proof of a valid Oregon Division of State Lands and other affected state or federal agency permit or approval. The need for a valid Oregon Division of State Lands and other affected state or federal agency permit or approval shall be decided as a function of a site specific ESEE or a Conditional Use Permit.

D. Air Quality. All mineral and aggregate extraction sites shall be operated in a manner consistent with air quality regulations.

1. All mineral and aggregate extraction sites shall show proof of a valid Oregon Department of Environmental Quality air discharge permit, when applicable which shall be decided as a function of a site specific ESEE or a Conditional Use Permit;
2. All roads being used by the operator on private land shall be maintained to minimize dust when the road is located within 300 feet of a residence in existence on the date the mining operation was established.
   a. Dust abatement shall conform to Oregon Department of Environmental Quality standards.
   b. Dust abatement shall include, but not be limited to, road watering, chemical dust suppressant, and/or road paving or similar treatment.

E. Land Quality. All mineral and aggregate extraction sites shall be operated in a manner consistent with accepted reclamation practices.

1. The operator shall obtain a valid Oregon Department of Geology and Mineral Industries operating permit.
2. Land shall be reclaimed for subsequent beneficial uses. Beneficial use shall be a condition suitable for uses allowed by the zoning district, consistent with a reclamation plan approved by the Oregon Department of Geology and Mineral Industries, or the end use determined as a result of a site specific ESEE analysis or Conditional Use Permit.

F. Operating Setbacks: The setbacks shall be the same as the underlying zone except as follows:

1. Additional setbacks for a proposed site or expansion of an extraction area may be required as part of site specific ESEE or a conditional use permit or a DOGAMI operating permit or reclamation plan.

G. Hours of Operation.

1. Operation of mineral and aggregate extraction sites shall be limited to the hours between 6:00 a.m. and 10:00 p.m. Monday through Saturday.
2. Operating hours may be modified as determined by a site specific ESEE or a County Conditional Use Permit.
3. Modification of hours for operations involving public contracts for public facilities or public roads shall require the Director of Public Works' input regarding anticipated costs or cost savings of modified hours.
4. Subsequent modification of operating hours may be made through the Planning Director review procedure with notice as set out in Section 81.030(A).

H. Blasting Restrictions.

1. Blasting shall be restricted to the hours of 9:00 a.m. to 6:00 p.m., Monday through Friday.
2. No blasting shall occur on Saturdays, Sundays or the following holidays: January 1; Memorial Day; July 4; Labor Day; Thanksgiving Day; December 25.
3. Exceptions to the blasting restrictions may be granted based on a site specific ESEE, or a Conditional Use Permit or if necessary to complete a specific road or construction project. The following criteria must be observed:
   a. There are no noise sensitive uses located within one thousand (1000) feet of the mining site; or
   b. The site is regulated by the Forest Practices Act; or
   c. If noise sensitive uses are located within one thousand (1000) feet of the mining site, the increased activity will not exceed noise standards established by the Department of Environmental Quality; and
   d. The operator of the mining site shall be responsible for notifying all noise sensitive uses located within one thousand (1000) feet of the mining site in person or by first class mail which is received at least forty-eight (48) hours prior to the date and approximate time of the blasting activity for which an operator receives an exception.

I. The site may be blocked to the public through the installation of fencing and locked gates as determined by either the site specific ESEE or the conditional use process.

J. Nuisance Mitigation. Mineral and aggregate sites shall be maintained and operated in a manner not detrimental to public health, safety and welfare.

81.060 - CONDITIONS

The following conditions may be imposed on a 1-A, 1-B or a site which is not on the Goal 5 Mineral and Aggregate inventory, upon a finding that additional restrictions are warranted:

A. A modification of required setbacks for adjacent land uses.

B. Limiting the manner in which the use is conducted:

   1. Restraints to minimize noise, vibration and blasting, air pollution, glare, odor, dust, etc.;
   2. Limitations on lighting (i.e., location, intensity, possible shielding);
   3. Other restrictions deemed necessary by findings of fact.

C. Additional access roads which circumvent residential areas.

D. Off-site stockpiling or processing.

E. Air, water or reclamation standards exceeding those required by state or federal law if justified by findings of fact.

F. Limiting the height, size, or location of buildings or structures.

G. Protecting and preserving existing trees, vegetation, water resources, wildlife habitat, or other significant natural resources.

81.070 - LIFTING THE OVERLAY ZONE

A. The owner of the property a mineral or aggregate site is located on, must submit a letter requesting the significant Resource Overlay Zone be lifted and the site be removed from the Mineral and Aggregate Inventory.

B. The owner of the property a mineral or aggregate site is located on which is being operated under a valid Department of Geology and Mineral Industries (DOGAMI) permit must submit proof from DOGAMI that the site has been closed and reclaimed.

C. All surface mining equipment, machinery, vehicles, buildings and related structures, accessory to the mineral or aggregate activity must be removed

from the extraction area within 30 days of the completion of all mining, processing and reclamation activities, except for any structures allowed by the underlying zone.

D. The zoning on the property shall revert to the underlying zone.

E. Once the Significant Resources Overlay Zone is lifted, the site cannot be reactivated, mined, excavated, or used for processing or stockpiling of materials without complying with the requirements contained in the Klamath County Land Development Code.

F. The owner of the property a mineral or aggregate site is located on may submit an application to apply the Significant Resources Overlay zone to a site which was previously zoned as such. The site will be treated as a new site and will not be considered as pre-existing or grandfathered.

ARTICLE 82
CAMPING

82.010 – PURPOSE

The purpose of this article is to establish standards for camping on private property, which is allowed in all zones.

Camping is the occupancy of private property within a tent, tent-trailer, shelter, vehicle, or recreational vehicle not within an authorized/designated camping facility.

82.020 – STANDARDS

Camping is allowed for not more than 120 days in a calendar year. The camp must be in full compliance with all applicable health and sanitation regulations.

ARTICLE 83
PLANNED UNIT DEVELOPMENT

83.010 - PURPOSE

Traditional zoning establishes zone boundaries and sets forth permitted uses within various zones which are intended to apply to individual lots and parcels. Acknowledging that land may be more effectively developed in unified building groups for residential, commercial, industrial, and mixed uses through imaginative site design techniques, the County intends:

A. To provide for a combination of uses on a single site when consistent with the Klamath County Comprehensive Plan;

B. To provide flexibility in the application of the Land Development Code;

C. To promote the economy of shared public services and facilities;

D. To enhance opportunities for creation of attractive, healthful, and efficient environments for housing, commerce and industry; and

E. To best utilize the potential of sites characterized by special features of location, topography, size or shape.

83.020 - EFFECT ON PREVIOUSLY APPROVED PUD ZONES

All lots and parcels carrying a Planned Unit Development designation on the adopted Klamath County Zoning Map on November l5, 1990 shall revert to the underlying zone designation in the following manner:

A. Development on parcels previously zoned PUD may continue consistent with any previously approved development plan. Development not specifically approved shall comply with this article.

B. Lots or parcels for which the underlying zone is undetermined or unclear shall be legislatively rezoned at no cost to the property owner.

83.030 - REVIEW AUTHORITY

A. The Planning Commission may review and authorize planned unit developments as conditional uses. The development shall be subject to all conditions imposed by the Planning Commission and shall be excepted from other provisions of this code only to the extent specified in the authorization.

B. Planned unit residential developments may be allowed in the R-1, R-5, RS, RL, RM and RH zones.

C. Planned unit commercial and light industrial developments may be allowed in the CG, CT, and IL zones.

D. Planned unit mixed developments of residential and commercial/industrial uses may be allowed in the R-1, R-5, RS, RM, CG and CT zones.

83.040 - APPLICATION PROCEDURES AND CONTENTS

A. Before submitting development plans for approval, an applicant proposing a planned unit development shall conduct a pre-application conference with the Planning Department to obtain general information, guidelines, procedural requirements, advisory opinions, and technical assistance for the project concept.

B. Following a pre-application conference the applicant may prepare a preliminary development plan for review by the Planning Commission. Thirty copies of the development plan shall be submitted to the Planning Department along with a filing fee set by the Board of County Commissioners to defray costs incidental to the review process.

C. In addition to the general requirements of this code, the preliminary plan shall contain the following elements:

1. A development proposal consisting of:
   a. General schematic maps which depict:
      1) The existing topography of the site, percent of slope, and contours shown at 2 foot intervals;
      2) Existing land uses adjacent to the site, including thoroughfares, their current design capacity and proposed future capacity;
      3) The location of public uses including schools, parks, playgrounds, and other open spaces on the proposed site or nearby area which may serve the development; and
      4) Common open spaces and a description of the proposed development and use of these spaces.
   b. A written statement containing:
      1) An explanation of the character of the development and the manner in which it has been planned to take advantage of the special provisions contained in this article;
      2) A financial capability report indicating prospective sources of funds and persons or groups having a financial interest in the project;

3) Evidence of ownership or control of the land proposed for development, including location by legal description of the property, addresses of the applicant, owners, and designers of the development; and

4) The method, operation and maintenance proposals for water supply, sewage disposal, fire protection, open space and recreation, area maintenance, and drainage.

2. A tentative land partition map or preliminary subdivision plat as may be necessary for the development including any re-platting;

3. A site plan showing the approximate location, heights, and setbacks of buildings, structures, and other improvements, and also indicating the open spaces to be provided, landscaping to be provided, the location and design of parking facilities, points of ingress and egress to the site, and major physiographic features;

4. Elevation and perspective drawings of proposed structures;

5. A development schedule indicating:

   a. The approximate date when construction will begin; and

   b. The phases in which the project will be built, if any, and the approximate starting dates of each phase.

6. Agreements, provisions, or covenants which will govern the use, maintenance, and continued protection of the planned unit development and any of its open space areas;

7. The following plans and diagrams:

   a. A circulation plan indicating proposed circulation for vehicles, pedestrians, and bicyclists, and any special engineering features or traffic regulation devises needed to facilitate or ensure safety in the development;

   b. A schematic landscape plan;

   c. A drainage plan prepared in accordance with Article 73.

83.050 - PERMITTED USES

A. The following uses are permitted in a planned unit residential development

1. A permitted or conditional use in the underlying zone.

2. Commercial service supported mainly by residents of the development.

3. Commercial uses if the design ensures adequate buffering to protect dwellings within the development and adjacent to it from traffic, noise or similar adverse influences. Dwellings may be situated within commercial uses.

B. The following uses are permitted in a planned unit commercial and light industrial development or mixed use developments:

1. A permitted or conditional use in the underlying zone;
2. Varied arrangement and location of commercial or industrial building types and designs;
3. Single or multiple family dwellings if designed with adequate buffering.

83.060 - MINIMUM PARCEL SIZE

A planned unit development may not be established on less than 5 acres of contiguous land unless the Planning Commission finds that the property is otherwise suitable due to its unique location, character, topography or other natural features, and is of sufficient size to be planned and developed in a manner consistent with the intent of this article.

83.070 - DENSITY

Dwelling unit density shall not exceed that allowed by the underlying zone. Where commercial or industrial uses are contained within a mixed use planned unit development, the land area occupied by such uses and accessory facilities shall not be included in the land area used to calculate the allowed density, and residential density shall be authorized by the Planning Commission.

83.080 - DESIGN STANDARDS

A. The setback requirements for the underlying zone shall apply to the planned unit development unless specifically determined or modified by the Planning Commission.

B. Building heights shall not exceed the requirements of the underlying zone unless specifically modified by the Planning Commission where demonstrated that height variances are consistent with the overall development proposal and will not adversely affect adjacent land uses.

C. Public works development standards of Chapter 70 shall apply unless specifically modified by the Planning Commission on a recommendation from the Director of Public Works.

D. All electrical, telephone, cable television or other utilities shall be located underground.

E. The layout and design of parcels and the siting of structures shall be oriented to take advantage of solar insulation when practical.

F. Landscaping shall comply with the provisions of Article 65.

G. Common dedicated open space shall comprise no less than 25 percent of the total site area, excluding roads, parking areas or commercial and industrial sites.

83.090 - PLANNED UNIT DEVELOPMENT REVIEW CRITERIA

A planned unit development may be approved only if it meets the following review criteria:

A. The existing and natural features of the land have been considered and will substantially contribute to the quality of the development;

B. The development demonstrates design quality;

C. The development will not have a substantial adverse impact on the surrounding area in terms of air, land and water quality, public facilities, natural hazards, or quality of the built environment;

D. The development is planned to ensure a high degree of safety for users of the development and surrounding areas;

E. The development will not require streets, roads or county services beyond that required by a typical lot-by-lot development; and

F. The development complies with all other applicable review criteria and standards of this code.

83.100 - PRELIMINARY DEVELOPMENT PLAN REVIEW PROCEDURE

A. Review of the preliminary development plan shall be in accordance with the provisions of the Planning Commission Review Procedure (Article 26).

B. The Planning Commission may attach any conditions it deems necessary to the development plan approval when supported by substantial evidence in the whole record.

C. The Planning Commission shall issue a final order of its decision on the preliminary development plan.

83.110 - FINAL DEVELOPMENT PLAN REVIEW PROCEDURE

A. No later than 2 years following approval of the preliminary development plan, the applicant shall submit a final development plan for review. The final development plan shall conform to the approved preliminary development plan and shall incorporate all changes or conditions required by the Planning Commission.

B. If the Planning Commission finds that the final development plan is materially different from the approved preliminary development plan, the applicant shall submit an amended plan for review. Submission of an amended plan shall be considered in the same manner as the original application.

C. An approved final development plan shall bear the signatures of the Planning Director, County Surveyor, and Director of Public Works if all requirements of this code and state statutes are satisfied. A reproducible copy of the final development plan shall be filed with the County Planning Department.

D. Any and all improvement work, including the construction and inspection of work by the Director of Public Works shall be the responsibility of the applicant, and shall be completed before approval of the final development plan. The applicant may enter into a performance agreement with the Director of Public Work for improvements pursuant to Article 15.

E. Prior to the expiration date of approval of the preliminary development plan, an applicant may apply for a time extension.

    1. Requests for time extension shall be filed on forms provided by the Planning Department, and accompanied by the established fee.
    2. Review of requests for time extension shall be reviewed according to the Type I Administrative Review Procedure.
    3. A maximum of 2 time extensions may be granted following the date of approval of the preliminary development plan. The cumulative length of time extensions shall not exceed 2 years.
    4. If a request for time extension is denied and the time period for obtaining approval of the development plan expires, a new planned unit development application shall be filed.

83.120 - CHANGES TO A FINAL DEVELOPMENT PLAN

A. The final development plan shall control the planned unit development throughout the course of its development.

B. Any amendments of the final development plan following final approval shall be processed as a new application, and shall be considered if the amendment is necessary for the continued success of the development, or because of changes in conditions that have occurred since the final development plan was approved, or because there have been changes in the development policy of the community as reflected by the Klamath County Comprehensive Plan or related land use regulations.

ARTICLE 84
MANUFACTURED DWELLINGS, RECREATIONAL VEHICLES, AND PARKS

84.010 – STANDARDS FOR MANUFACTURED HOMES

Manufactured dwellings placed on individual lots in zones identified in Chapter 50, shall meet construction standards in accordance with Oregon Revised Statutes, Chapter 446 and Klamath County Code Chapter 703 and the following standards:

Manufactured dwellings are divided into three classes. Each class contains certain standards for compliance.

A. Minimum standards for manufactured homes sited inside the Klamath Falls Urban Growth Boundary shall:

1. Be a double section or larger multi-section unit; and
2. The home shall be placed on an excavated and back-filled foundation, enclosed at the perimeter with no more than twenty-four (24) inches of the enclosing material exposed above grade. Where the building site has a sloped grade, no more than twenty four inches of the enclosing material shall be exposed on the uphill side of the home; and
3. Have utilities connected subject to the requirements of the Klamath County Building Department and manufacturer's specifications;
4. The home must bear the HUD label; and
5. Have roofing materials of a type customarily used on site-constructed residences. The home shall have a pitched roof with a nominal slope of at least three feet in height for each twelve feet in width; and
6. Have siding materials of a type customarily used on site-constructed residences such as horizontal vinyl, wood, or aluminum lap-siding; and
7. Have a garage or carport at least 200 square feet in size, constructed before occupancy, of like materials. The garage or carport must be sited on the same lot as the dwelling.

B. Minimum standards for manufactured homes sited outside the Klamath Falls Urban Growth Boundary:

1. Be placed on a foundation, or support system approved by the building official; Skirting is required and shall be placed prior to final electrical approval; and
2. The home must bear the HUD label; and
3. Have utilities connected subject to the requirements of the Klamath County Building Department and manufacturer's specifications.

C. Manufactured homes NOT meeting the above minimum standards may be sited by Type I Administrative Review per Article 22.030 outside the Klamath Falls UGB if sited in Klamath County as of February 1, 1999, or within designated Manufactured/Mobile Home Parks, or for Temporary Uses as defined by Article 42.

1. If placed on a foundation or support system approved by the building official; skirting is required and shall be placed prior to final electrical approval; and
2. Bear the Oregon Insignia of Compliance; or if to be placed on private property, be certified as "substantially equivalent," including but not limited to upgraded electrical circuitry, to a HUD labeled home as certified by the State of Oregon Building Codes Division; and
3. Have utilities connected subject to the requirements of the Klamath County Building Department and manufacturer's specifications.

84.020 – CRITERIA AND STANDARDS FOR MANUFACTURED/MOBILE HOME PARKS

Manufactured/Mobile home parks established in zones allowing such uses as identified in Chapter 50 shall be developed in accordance with standards found in Oregon Revised Statutes, Chapter 446 and Oregon Administrative Rules, Chapter 814, Division 28, and in accordance with the following criteria and standards:

A. Site development plans submitted to the Planning Department shall conform to the standards specified in ORS Chapter 446 and OAR Chapter 814, Division 28.

B. Manufactured/Mobile home parks shall be no less than 1 acre in size.

C. No more than 10 manufactured dwelling spaces shall be developed per acre.

D. No building or structure shall exceed 25 feet in height.

E. Exterior boundaries of the Manufactured/Mobile Home Park shall be screened with a sight-obscuring fence or hedge as provided for in Article 64.

F. Vehicular access shall be onto a dedicated street or highway, and shall be subject to approval of the Director of Public Works or State Highway Division.

G. Vehicular access points to the Manufactured/Mobile Home Park shall maintain a "clear vision" setback pursuant to Section 62.020.

H. Manufactured/Mobile Home Parks shall be landscaped as required in Article 65.

I. Signs may be permitted pursuant to Article 66.

J. Manufactured/Mobile Home Parks shall meet all Public Works Department standards of Chapter 70.

84.030 – MANUFACTURED DWELLING STORAGE

A manufactured dwelling may be stored without utility service on a lot or parcel for not more than 6 months in any 12 month period subject to meeting all required property setbacks. Authorization for manufactured dwelling storage shall be obtained through application for a Site Plan Review conducted pursuant to the Type I Administrative Review Procedure, and shall be consistent with applicable zoning regulations.

84.040 - SITING RECREATIONAL VEHICLES

Recreational vehicles are not designed for residential purposes according to standards and specifications of the Uniform Building Code which have been established to protect public health, safety and welfare. Recreational vehicles shall not be used for housing or residential purposes except:

A. When the recreational vehicle is located on an individual lot or parcel during the construction of a dwelling or for use in the temporary care of a relative, and subject to a Temporary Use Permit (Article 42) and all applicable health and safety requirements of the Health and Building Department.

84.050 – STANDARDS FOR RECREATIONAL VEHICLE PARKS

All recreational vehicle parks shall be designed to conform to the standards specified in Oregon Administrative Rules, Chapter 814, Division 29. The site plan requirements identified in the Administrative Rules shall be used by the County in reviewing any request for authorization of the Recreational Vehicle Park in any zone authorizing such use.

84.060 – REPLACEMENT OF SINGLE WIDE MOBILE/MANUFACTURED HOMES WITHIN THE UGB

A. An existing single wide mobile/manufactured home utilized as an office/caretaker may be replaced with another single wide for the same purpose, if the following apply:

    1. The single wide mobile/manufactured home to be replaced, existed at its current location no later than December 2001 and continues to exist;
    2. The existing single wide mobile/manufactured home and its replacement must have been, and continue to be used in conjunction with a business, and cannot be used exclusively for residential purposes;

3. The replacement permitted by this section, shall only be allowed in Commercial or Industrial zones described in Chapter 50;
4. There must be insufficient space for anything larger than a single wide on the lot or parcel; and
5. The replacement shall meet the standards of 84.010 (A)(2-6).

B. In addition to the criteria (1-5) described in part A of this section, a Conditional Use Permit pursuant to Article 44, is required.

C. If a replacement allowed by this section is no longer used as an office/caretaker, it shall be removed no later than three months after the use is discontinued.

ARTICLE 85
HOME OCCUPATIONS

85.010 - PURPOSE

The purpose of this article is to ensure that home occupations conducted within one's own property are compatible with the neighborhood in which it is located, and maintain the character and appearance of both the use and the neighborhood.

85.015 - DEFINITION

Home occupation refers to an occupation or enterprise carried on within a dwelling or accessory building for financial gain by a member of the immediate family residing within the dwelling. The occupation must be ACCESSORY to the primary use of the home as a residence. Typical home occupations are services or crafts such as dressmaking, tutoring, music lessons, etc. Accessory uses shall not require internal or external modifications to the dwelling or accessory building or require the use of machinery, tools, or equipment not associated with residential use.

For the purpose of this Article, a home occupation is an occupation or enterprise carried on within a dwelling or accessory building, for financial gain by a member of the immediate family residing within the dwelling; the occupation or enterprise must be accessory to the primary residential use.

85.020 - PERMITTED USE

A home occupation may be approved or conditionally approved in all zones allowing residential use pursuant to the Type II Administrative Review Procedure if the following criteria are satisfied:

A. The business will be conducted solely by a resident of the property on which the business is located. No other employees are permitted.

B. The home occupation is conducted primarily within a dwelling or accessory building;

C. There is no outdoor storage of materials or goods;

D. Machinery, tools, or equipment used is typically associated with residential use and will not have an adverse or harmful effect (i.e. noise, odor or fumes) to the established land use of the area.

E. The occupation shall not require internal or external alterations of the dwelling or accessory building; and

F. The use will utilize a sign or nameplate not greater than 3 square feet in area.

85.030 - CONDITIONAL USE

A home occupation may be approved in all zones allowing residential use as conditional use permit (Article 44), if the following criteria are satisfied:

A. The business will be conducted principally by a resident of the property on which the business is located and will employ no more than 2 additional full- or part-time employees.

B. The home occupation is conducted primarily within a dwelling or accessory building;

C. The business is not the primary use of the property;

D. The home occupation shall not occupy more than 25 percent of the total floor area of all structures located on the same property as the home occupation;

E. The use will not require internal or external alterations, modifications, or construction features that change the principle character of the use or structure involved;

F. One (1) off-street parking space is provided for each employee and one (1) off-street parking space is provided for each 300 square feet of gross floor area of the use;

G. The use will utilize a sign not greater than 6 square feet in area; and

H. Outdoor storage of materials shall be screened from view of the street and adjacent property by a sight obscuring fence or hedge.

85.040 - ANNUAL REVIEW

The Planning Director or designee shall review a permit allowing a home occupation every 12 months following the date the permit was issued, and may continue the permit if the home occupation continues to comply with the requirements of this article. Annual review shall be conducted in accordance with the Type II Administrative Review Procedure.

85.050 - BED AND BREAKFAST STANDARDS

Bed and Breakfast operations may be allowed subject to a conditional use permit (Article 44) if the following criteria are satisfied in addition to those of Section 44.030:

A. Minimal outward modification of the structure or grounds may be made only if such changes are compatible with the character of the area or neighborhood and the intent of the zoning district in which it is located.

B. One off-street parking space shall be provided for each guestroom. The front yard shall not be used for off-street parking for guests unless the parking area is screened and landscaped pursuant to Articles 64 and 65.

C. Those facilities providing service to more than 6 guests are not considered "license exempt" under state law and must comply with state hotel/motel restaurant licensing procedures administered by the Health Department. The issuance of such licenses shall not be considered as conferring nonconforming status to the use which would either allow alteration of the facility or otherwise compel rezoning of the property for commercial use.

D. One on-premise sign may be approved provided that such sign is not more than 6 square feet in size.

E. Room rentals to guests shall not exceed 14 consecutive days.

F. The bed and breakfast facility must be accessory to and contained within the single-family dwelling occupied by the owner (not a manager) or within accessory dwelling units or structures which lawfully exists.

G. The bed and breakfast facility shall not begin operation until the Health Department has inspected and approved the facility.

ARTICLE 86
ARCHEOLOGICAL RESOURCES

86.010 - PURPOSE

The purpose of this article is to establish provisions to mitigate adverse impacts to archaeological resources and to prescribe the means by which archaeological resource sites are assessed.

86.020 - APPLICATION

Until such time as specific inventory work accurately identifies and designates archaeological resources, a use or activity identified as a conflicting use in Section 57.040(H) shall be reviewed pursuant to the provisions of this article when the use or activity is located in a high or medium probability area within known archaeologically sensitive area identified in the Comprehensive Plan.

86.030 - EXEMPTIONS

The following uses and activities are exempt from the requirements of this article:

A. A use or activity proposed in a low probability area;

B. Forest operations regulated by the Oregon Forest Practices Act;

C. Accepted farm practices as defined by this code;

D. Residential uses.

86.040 - PROBABILITY AREAS

A. High probability areas include:

1. Previously recorded sites
2. Linear features such as trails, roads, ditches and railroads
3. Areas adjacent to seeps, springs, ponds and lakes
4. Benches and terraces adjacent to streams
5. Bottomlands next to rivers and streams
6. Foothills near rivers at the edge of floodplains
7. Meadow edges
8. Areas near extinct water systems
9. Scabland plateaus

10. Lava and tuff tablelands
11. Ridges and saddles
12. Obsidian sources
13. Class I streams with former anadromous fish runs
14. Lava tubes and caves
15. Alluvial slopes

B. Medium probability areas include:

1. Geologic formations that could contain caves or overhangs
2. Promontories
3. Feeder ridges for trail systems
4. Floodplains and benches of intermittent streams

86.050 - SURVEY REQUIREMENTS

An application for a use or activity subject to the provisions of this article shall be accompanied by documentation identifying archaeological resources on the affected site. Documentation shall provide a determination of significance based upon the following criteria:

A. The resource possess integrity of the original or historically evolved design, setting, materials, workmanship, feeling and one or more of the following criteria apply:

1. The site is associated with events that have made a significant contribution to the patterns of county history or prehistory;
2. The site is associated with the lives of significant persons or groups;
3. The site embodies distinctive characteristics of a style, type, period or method of construction, or possesses high artistic values, or represents a significant and distinguishable entity whose components may lack individual distinction; or
4. The site has yielded, or may be likely to yield in formation important to county history or prehistory.

B. Documentation Requirements. Documentation from a professional archaeologist as defined in ORS 97.740 or a duly authorized representative of a Native American tribe. Documentation shall include:

1. Time and date of the survey, and person(s) responsible;
2. Survey methodology;

3. A description of published and unpublished reports consulted regarding archaeological resources potentially present in the area;
4. Findings and a determination of significance; and
5. A discussion of adverse impacts and appropriate measures to mitigate potential impacts.

86.060 - EFFECT OF SURVEY AND DETERMINATION

A. If a site is identified and is not determined significant, the proposed use or activity may proceed without any additional consideration to the archaeological resource.

B. If a site is identified and determined to be significant, the following appropriate measures shall be considered:

1. Avoid the site, unless demonstrated to be impracticable;
2. Bury or cover the site without disturbing it, unless demonstrated to be impracticable; or
3. Redesign the project to minimize impacts and excavate and recover data from any disturbed area(s) at the developer's expense.

86.070 - POST-DEVELOPMENT DISCOVERY

A. If an archaeological object, deposit or artifact is discovered during any development action, individuals shall report the discovery as soon as possible to the Planning Department. Requirements for reporting discoveries shall be incorporated into any final decision on a permit application governed by this article.

B. No development shall be delayed or halted without the developer's or landowner’s consent unless an Indian burial site is involved.

C. The Planning Department shall notify the appropriate Native American tribe, the State Historic Preservation Office, and other appropriate agencies or individuals charged with archaeological resource preservation in order that the landowner and interested parties may negotiate and resolve any conflicts.

D. Any individual encountering archaeological resources in the course of any development shall comply with Oregon law including ORS 358.905 (Archaeological Objects and Sites), 273.705 (Removal of Historic and Other Valuable Materials), 97.740 (Protection of Indian Graves). The relevant Native American tribal government may request to receive recovered non-sacred artifacts following research studies, subject to approval of the landowner or developer.

ARTICLE 87
HISTORIC BUILDINGS AND SITES

87.010 - PURPOSE

The purpose of this article is to establish provisions for the review of development proposals affecting identified historic properties.

87.020 - APPLICATION

A. This article shall apply to all buildings and sites designated as significant ("1-C") in the Comprehensive Plan. Said buildings and sites are declared important historical resources.

B. A permit is required for alteration or demolition of any structure identified as significant.

C. Alteration as used in this article means any addition to, removal of, or change in the exterior part of a structure, and shall include modification of the surface texture, material or architectural detail of the exterior part of the structure, but shall not include paint color.

D. Nothing in this article shall be construed to prevent the ordinary maintenance and repair of any exterior architectural feature that does not involve a change in design, material or external appearance. Furthermore, this article does not prevent the construction, reconstruction, alteration, restoration, demolition or removal of any feature when the Building Official, State Fire Marshal or other public official determines that emergency action is required for public safety.

87.030 - REVIEW PROCEDURE

A. A property owner or authorized agent may initiate a request for a permit for alteration or demolition of a historic structure by filing an application with both the Building Official and Planning Department.

B. Applications for alteration or demolition of a historic structure shall be subject to the Type II Administrative Review Procedure (Article 22).

C. In addition to the notice requirements as set forth for the Type II Administrative Review Procedure, notice shall be provided to appropriate agencies as specified in Section 57.080.

87.040 - REVIEW CRITERIA

The review body shall approve an application for exterior alteration if the proposal is determined to be harmonious and compatible with the appearance and character of the historical building and shall disapprove any application if found detrimental as unsightly, grotesque or adversely affecting the architectural significance, the integrity or historical appearance, and the educational and historic value of the building. The following criteria apply to exterior alterations to historical buildings:

A. Retention of original construction - So far as practicable, all original exterior materials and details shall be preserved.

B. Height - Additional stories may be added to historic buildings provided that:

    1. The added height complies with requirements of the building and zoning codes,
    2. The added height does not exceed that which was traditional for the style of the building.
    3. The added height does not alter the traditional scale and proportions of the building style.
    4. The added height is visually compatible with adjacent historic buildings.

C. Bulk - Horizontal additions may be added to historic building provided that:

    1. The bulk of the addition does not exceed that which was traditional for the building style.
    2. The addition maintains the traditional scale and proportion of the building style.
    3. The addition is visually compatible with adjacent historic buildings.

D. Visual Integrity of Structure - The lines of columns, piers, spandrels, and other primary structural elements shall be maintained so far as is practicable.

E. Scale and Proportion - The scale and proportion of altered or added building elements, the relationship of voids to solids (windows to walls) shall be visually compatible with the traditional architectural character of the historic building.

F. Materials, Color and Texture - The materials, colors and texture used in the alteration or addition shall be visually compatible with the traditional architectural character of the historic building.

G. Signs, Lighting and other Appurtenances - Signs, exterior lighting and other appurtenances, such as walls, fences, awnings, and landscaping shall be

visually compatible with the traditional architectural character of the historic building.

87.050 - REVIEW BODY ACTION FOR DEMOLITIONS

Based on the applicable review criteria, the review body shall take the following action on proposals for demolition of a historic structure:

A. Delay issuance of the demolition permit for up to 90 days, during which the Planning Director, together with appropriate agencies and interested persons, shall attempt to determine if public or private acquisition and preservation of the structure is feasible, or if other alternatives are possible which could be carried out to prevent demolition of the structure; or

B. Approve immediate issuance of the demolition permit if:

    1. The structure cannot be economically rehabilitated; and
    2. A program or project does not exist which may reasonably result in preservation of the structure; and
    3. Delay of the demolition permit would result in unnecessary and substantial hardship to the applicant and property owner; and
    4. Issuance of the demolition permit will not act to the detriment of the public welfare considering the economic, cultural and social consequences of demolishing the structure.

ARTICLE 88
DESTINATION RESORT OVERLAY
(DRO)

88.010 - PURPOSE

The purpose of the Destination Resort Overlay zone is to provide a process for the siting of destination resorts on rural lands that have been mapped by the County as eligible for this purpose. The Destination Resort Overlay is intended to provide for properly designed destination resort facilities which enhance and diversify the recreational opportunities and economy of Klamath County. The Destination Resort Overlay will ensure resort development that complements the physical attractiveness of an area without significant adverse effect on commercial farming and forestry operations or the significant natural and cultural features which contribute to the setting.

88.015 - APPLICABILITY

A. The provisions of this Article shall apply solely to development which meets the standards set forth in Section 88.030 or Section 88.035. Development which meets the standards in Section 88.030 shall be referred to hereafter as destination resorts, and development which meets the standards in Section 88.035 shall be referred to hereafter as small destination resorts. Where special standards or criteria are not specifically called out for small destination resorts, the standards for destination resorts shall apply. For a destination resort application, the standards and procedures of this Article shall govern in cases where they conflict with the standards or procedures of the underlying zone. Other provisions of this Code, made applicable by specific map designations such as Significant Resource Overlay (SRO), Airport Safety Overlay (ASK), Airport Noise Overlay (ANK), Airstrip Safety Overlay (AS), and Flood Hazard Overlay (FHZ), or otherwise applicable under the terms of the Land Development Code text shall remain in full force and effect, except as otherwise specified herein.

B. Destination resorts shall be allowed only on tracts mapped by the County as eligible for destination resort siting and designated as such in the Comprehensive Plan.

88.020 - DEFINITIONS

A. "Developed recreational facilities" means improvements constructed for the purpose of recreation and may include but are not limited to golf courses, tennis courts, playing fields, interpretive centers, wildlife observation shelters,

nature trails, swimming pools, marinas, ski trails, snowmobile trails, bicycle paths, and indoor and outdoor sport facilities.

B. "Open space" means any land that is retained in a substantially natural condition, or is improved for outdoor recreational uses such as golf courses, playing fields, hiking or nature trails or equestrian or bicycle paths, or is specifically required to be protected by a conservation easement. Open spaces may include ponds, lands protected as important natural features, lands preserved for farm or forest use, required landscaped areas and lands used as buffers. Open space does not include residential lots or yards, streets or parking areas.

C. "Overnight lodgings" means permanent, separately rentable accommodations which are not available for residential use. Overnight lodgings include hotel rooms, lodges, cabins and time-share units. Individually owned units may be considered overnight lodgings if they are available for overnight rental use by the general public for at least 38 weeks per calendar year through a central reservation system operated by the destination resort or by a real estate property manager, as defined in ORS 696.010. Tent sites, recreational vehicle parks, manufactured dwellings, dormitory rooms and similar accommodations do not qualify as overnight lodgings for the purpose of this definition.

D. "Self-contained development" means a development for which community sewer and water facilities are provided onsite and are limited to meet the needs of the development or are provided by existing public sewer or water service as long as all costs related to service extension and any capacity increases are borne by the development. A "self-contained development" shall have developed recreational facilities provided onsite.

E. "Tract" means a lot or parcel or more than one contiguous lot or parcel in a single ownership. A tract on which a destination resort is sited may include property that is not included in the destination resort if the property to be excluded is on the boundary of the tract and constitutes less than 30 percent of the total tract.

F. "Visitor-oriented accommodations" means overnight lodging, restaurants and meeting facilities which are designed to provide mainly for the needs of visitors rather than area residents.

88.030 - STANDARDS

A destination resort shall meet the following standards:

A. Development shall be located on a tract that contains a site of at least 160 acres.

B. The site must have direct access onto a state or county roadway, as designated by the County or the Oregon Department of Transportation. Standards shall be in accordance with Article 71 of this Code.

C. Development shall include meeting rooms, restaurants with seating for at least 100 persons, and a minimum of 150 separate rentable units for overnight lodging, oriented toward the needs of visitors rather than area residents. However, the rentable units may be phased in as follows:

    1. A total of 150 units of overnight lodging shall be provided as follows:

    2. At least 50 units of overnight lodging must be constructed prior to the closure of sale of individual lots or units.

    3. At least 50 units of the remaining 100 required overnight lodging units must be constructed or guaranteed pursuant to Article 15 through surety bonding or equivalent financial assurances within 5 years of the initial lots sales.

    4. The remaining required overnight lodging units must be constructed or guaranteed pursuant to Article 15 through surety bonding or equivalent financial assurance within 10 years of the initial lot sales.

    5. The number of units approved for residential sale shall not be more than 2 ½ units for each unit of permanent overnight lodging provided under paragraph (2) of this subsection.

    6. If the developer of a resort guarantees the overnight lodging units be required under paragraphs (3) and (4) of this subsection through surety bonding or other equivalent financial assurance, the overnight lodging units must be constructed within 4 years of the date of execution of the surety bond or other equivalent financial assurances.

D. All required developed recreational facilities, key facilities intended to serve the entire development and visitor-oriented accommodations shall be physically provided or guaranteed pursuant to Article 15 through surety bonding or equivalent financial assurances prior to closure of sale of individual lots or units. In phased developments, developed recreational facilities and other key facilities intended to serve a particular phase shall be constructed prior to sales in that phase or guaranteed through surety bonding. Nothing in this subsection shall be interpreted to require the construction of all

approved phases of a destination resort, provided that the destination resort as developed complies with the standards of this section.

E. At least $7 million shall be spent on improvements for onsite developed recreational facilities and visitor oriented accommodations exclusive of costs for land, sewer and water facilities and roads. Not less than one-third of this amount shall be spent on developed recreational facilities. Spending required under this subsection is stated in 1993 dollars. The spending required shall be adjusted to the year in which calculations are made in accordance with the United States Consumer Price Index.

F. Commercial uses are limited to those listed in Section 88.045(H). Such uses must be internal to the resort, and are limited to types and levels of use necessary to meet the needs of visitors to the resort. Industrial uses of any kind are not permitted.

G. At least 50 percent of the site shall be dedicated to permanent open space, excluding street and parking areas. Open space areas shall be maintained as such in perpetuity through deed restrictions.

H. If the site includes a resource site designated on the County's Goal 5 inventories as significant ("1C"), the resource site shall be protected in accordance with the adopted Goal 5 management plan for the site. "3A" sites shall also be preserved by a conservation easement sufficient to protect the resource values of the resource site. Any conservation easement required under this subsection shall be recorded with the property records of the tract on which the destination resort is sited prior to development of the phase of which the resource site is a part.

I. Riparian vegetation within 100 feet of lakes, rivers, streams and designated significant ("1C") wetlands shall be retained.

J. The standards of Chapter 60 apply to destination resorts, except as limited or clarified as follows:

    1. For purposes of applying the standards of Chapter 60, development under this Article shall be treated as if it were zoned CR (Recreational Commercial).

2. All destination resorts, whether located inside or outside the UGB, shall comply with the landscaping standards of Article 65 for all visitor-oriented accommodations and accessory uses (other than temporary uses).

3. The Planning Commission may alter any of the standards of Chapter 60 (except standards relating to signs) applicable to a destination resort if it determines that the standards as altered are consistent with public safety, preservation of open space, efficient provision of public facilities and services, and will not result in an adverse effect on adjacent land uses.

K. Except where more restrictive minimum setbacks are called for, the minimum setback from exterior property lines for all development (including structures and site-obscuring fences of over three feet in height but excepting existing buildings and uses) shall be as follows:

1. 250 feet for commercial development listed in Section 88.045, including all associated parking areas;
2. 150 feet for visitor-oriented accommodations other than single-family residences, including all associated parking areas;
3. 50 feet for above-grade development other than that listed in subsections (1) and (2);
4. 25 feet for internal roads;
5. 50 feet for golf courses and playing fields;
6. 25 feet for jogging trails, nature trails and bike paths where they abut private developed lots and no setback for where they abut public roads and public lands;
7. The setbacks of this section shall not apply to entry roadways, landscaping, utilities and signs.

L. The setback of a structure or building is the horizontal distance measured to any part of the structure including architectural features, from the property line, and shall be:

1. Ten (10) feet for internal front yard setbacks unless the front yard is adjacent to a common area. Setback on a property with a depth of common area to the front of twenty (20) feet or more is zero (0). When the common area is less than twenty (20) feet, the structure shall be

setback six (6) inches for every foot less than twenty (20) feet. A 90-degree perpendicular measurement will be taken from the front property line at twenty (20) foot intervals along the front property line, to identify the shallowest depth of common area perpendicular to the front property line. This figure will be used to determine the depth of common area and the resulting front yard setback.

2. Five (5) feet for internal rear yard setbacks unless the rear yard is adjacent to a common area. Setback on a property with a depth of common area to the rear of 10 feet or more is zero (0). When the common area is less than 10 feet, the structure shall be setback six (6) inches for every foot less than 10 feet. The distance of common open space adjacent to a rear lot yard will be measured at 10-foot intervals along the rear property line. A 90-degree perpendicular measurement will be taken from the rear property line to the nearest point of common area. This figure will be used to determine the depth of common area and the resulting rear yard setback.

3. Five (5) feet for internal side yard setbacks unless the side yard is adjacent to a common area. Setback on a property with a depth of common area to the side of 10 feet or more is zero (0). When the common area is less than 10 feet, the structure shall be six (6) inches for every foot less than 10 feet. The distance of common open space adjacent to a side lot yard will be measured at 10-foot intervals along the side property line. A 90-degree perpendicular measurement will be taken from the side property line to the nearest point of common area. This figure will be used to determine the depth of the common area and the resulting side yard setback.

4. Zero (0) feet for internal side yard setbacks on lots that measure less than 4500 square feet, when applicant has met building fire resistive ratings.

88.035 - STANDARDS FOR SMALL DESTINATION RESORTS

In lieu of the standards set forth in section 88.030, the standards set forth in this section may be applied to a destination resort on land that is not zoned Exclusive Farm Use, Forestry, or Forestry-Range in the County's comprehensive plan, or on land where there has been an exception to any statewide planning goal with respect to agricultural lands, forestlands, public facilities and services and urbanization.

Developments which meet the following standards shall be considered small destination resorts:

A. The resort shall be located on a tract that contains a site of at least 20 acres.

B. The resort must provide lodging and other services oriented to a recreational resource which can only reasonably be enjoyed in a rural area. Such recreational resources include, but are not limited to, a hot spring, a ski slope or a fishing stream.

C. At least 25 units, but not more than 75 units, of overnight lodging shall be provided. A restaurant and meeting room with at least one seat for each unit of overnight housing shall be provided.

D. At least $2 million shall be spent on improvements for onsite developed recreational facilities and visitor oriented accommodations exclusive of costs for land, sewer and water facilities and roads. Not less than one-third of this amount shall be spent on developed recreational facilities. Spending required under this subsection is stated in 1993 dollars. The spending required shall be adjusted to the year in which calculations are made in accordance with the United States Consumer Price Index.

E. Residential uses shall be limited to those necessary for the staff and management of the resort.

F. The resort shall be constructed and located so that it is not designed to attract highway traffic. Resorts shall not use any manner of outdoor advertising signing except:

    1. Tourist oriented directional signs as provided in ORS 377.715 to 377.830; and

    2. Onsite identification and directional signs.

G. Commercial uses are limited to those listed in Section 88.045(H). Such uses must be internal to the resort, and are limited to types and levels of use necessary to meet the needs of visitors to the resort. Industrial uses of any kind are not permitted.

H. At least 50 percent of the site shall be dedicated to permanent open space, excluding street and parking areas. Open space areas shall be maintained as such in perpetuity through deed restrictions.

I. If the site includes a resource site designated on the County's Goal 5 inventories as significant ("1C"), the resource site shall be protected in accordance with the adopted Goal 5 management plan for the site. "3A" sites shall also be preserved by a conservation easement sufficient to protect the

resource values of the resource site. Any conservation easement required under this subsection shall be recorded with the property records of the tract on which the destination resort is sited prior to development of the phase of which the resource site is a part.

J. Riparian vegetation within 100 feet of lakes, rivers, streams and designated significant ("1C") wetlands shall be retained.

K. The standards of Chapter 60 apply to small destination resorts, except as limited or clarified as follows:

1. For purposes of applying the standards of Chapter 60, development under this Article shall be treated as if it were zoned CR (Recreational Commercial).

2. All small destination resorts, whether located inside or outside the UGB, shall comply with the landscaping standards of Article 65 for all visitor-oriented accommodations and accessory uses (other than temporary uses).

3. The Planning Commission may alter any of the standards of Chapter 60 (except standards relating to signs) applicable to a small destination resort if it determines that the standards as altered are consistent with public safety, preservation of open space, and efficient provision of public facilities and services, and will not result in an adverse effect on adjacent land uses.

L. Except where more restrictive minimum setbacks are called for, the minimum setback from exterior property lines for all development (including structures and site-obscuring fences of over three feet in height but excepting existing buildings and uses) shall be as follows:

1. 250 feet for commercial development listed in Section 88.045, including all associated parking areas;

2. 150 feet for visitor-oriented accommodations other than single-family residences, including all associated parking areas;

3. 50 feet for above-grade development other than that listed in subsections (1) and (2);

4. 25 feet for internal roads;

5. 50 feet for golf courses and playing fields;

6. 25 feet for jogging trails, nature trails and bike paths where they abut private developed lots and no setback for where they abut public roads and public lands;

7. The setbacks of this section shall not apply to entry roadways, landscaping, utilities and signs.

88.040 - PERMITTED USES

A. Visitor-oriented accommodations:

1. Overnight lodging;

2. Convention and conference facilities and meeting rooms;

3. Restaurants, lounges and similar eating and drinking establishments; and

B. Developed recreational facilities:

1. Golf courses and clubhouses;

2. Indoor and outdoor swimming pools;

3. Indoor and outdoor tennis courts;

4. Physical fitness facilities;

5. Playing fields;

6. Equestrian facilities;

7. Interpretive centers;

8. Wildlife observation shelters;

9. Walkways, bike paths, jogging paths, equestrian trails, nature trails, ski trails and snowmobile trails;

10. Marinas and boating facilities;

C. Residential accommodations:

1. Single-family dwellings;

2. Townhouses;

3. Time share projects;

4. Living quarters for employees;

D. Open space;

E. Accepted agricultural and forestry practices as permitted in this Code;

F. Facilities necessary for public safety and utility service within the destination resort;

G. Other similar uses permitted in the underlying zone and consistent with the purposes of this Article.

88.045 - ACCESSORY USES

The following accessory uses shall be permitted provided they are ancillary to the destination resort and consistent with the purposes of this Article:

A. Visitor-related transportation facilities excluding airports but including heliports and airstrips;

B. Emergency medical facilities not exceeding 2,000 square feet;

C. Storage structures and areas, including short-term recreational vehicle storage for resort visitors;

D. Kennels as a service for resort visitors only;

E. Recycling and garbage collection facilities;

F. Maintenance shops and facilities;

G. Dormitories;

H. Commercial services and specialty shops designed to provide for the visitors to the resort:

1. Specialty retail shops including but not limited to drug and sundries stores, clothing stores, book stores, craft studios, art galleries, gift shops, fast food and specialty food shops;

2. Barber shops, beauty salons, tanning salons, massage studios and other similar personal services shops;

3. Automobile service stations limited to fuel sales, incidental parts sales, minor repairs and minor maintenance;

4. Banking and real estate offices;

5. Other similar commercial services which provide for the needs of resort visitors and are consistent with the purposes of this Article.

I. Theaters for live performances;

J. Temporary uses, including temporary or seasonal fairs, festivals, and charity or promotional activities consistent with the purposes of this Article, provided that any temporary use must be approved as provided in Article 42;

K. Other similar accessory uses consistent with the purposes of this Article.

88.050 - APPLICATION PROCEDURES AND CONTENTS

A. Before submitting development plans for approval, an applicant proposing a destination resort shall conduct a pre-application conference with the Planning Department to obtain general information, guidelines, procedural requirements, advisory opinions, and technical assistance for the project concept.

B. Following a pre-application conference, the applicant shall submit a preliminary development plan for review by the Planning Commission. Fifteen (15) copies of the preliminary development plan shall be submitted to the Planning Department along with a filing fee set by the Board of County Commissioners to defray costs incidental to the review process.

C. The preliminary development plan shall contain the following elements:

1. Illustrations and graphics to scale, identifying:

a. The location and total number of acres to be developed as a destination resort;

b. The subject area and all land uses adjacent to the subject area;

c. Types and general location of proposed development and uses, including residential and commercial uses, together with landscaping required by Article 65;

d. A general depiction of the characteristics of the site, including:

(1) Goal 5 resources on the County's comprehensive plan inventory;

(2) Riparian vegetation;

(3) Water areas, including streams, lakes, ponds and Division of State Lands recognized wetlands;

(4) Existing topography.

e. Proposed methods of access to the development, identifying the main vehicular circulation system within the resort and an indication of whether streets will be public or private, consistent with Article 71;

f. Preliminary parking plan consistent with Article 68;

g. Major trail systems;

h. The approximate location and number of acres proposed as open space, buffer area or common area. Areas proposed to be designated as "open space," "buffer area" or "common area" should be clearly illustrated and labeled as such;

i. List of proposed recreational amenities and approximate location;

j. A conceptual water and sewer facilities plan for the site consistent with Article 74 or Article 75, whichever is applicable;

k. A conceptual site drainage plan consistent with Article 73.

2. An open space management plan, including:

a. Proposed deed restrictions that will assure that designated open space areas are maintained as open space in perpetuity;

b. Proposed conservation easements to protect Goal 5 "3A" sites, as required by Section 88.030(H) or Section 88.035(I), whichever is applicable;

c. For any Goal 5 "1C" resource sites on the destination resort site, an explanation of how the County's adopted management program will be implemented;

d. A description of measures intended to mitigate project impacts on fish and wildlife.

3. Further information as follows:

a. A written statement addressing how the proposed destination resort satisfies the approval criteria of Section 88.060;

b. A description of any proposed alterations in the applicable development standards of Chapter 60, together with an explanation of why the standards as altered would be consistent with public safety, preservation of open space, and efficient provision of public facilities and services, and would not result in an adverse effect on adjacent land uses.

c. A description of the proposed method of providing all utility systems, including the preliminary or schematic location and sizing of the utility systems.

d. A description of the proposed order and schedule for phasing (if any) of all development including an explanation of when facilities will be provided and how they will be secured if not completed prior to the closure of sale of individual lots or units.

e. An assessment of the impact of the destination resort on fish and wildlife, taking into account mitigation measures.

88.055 - PRELIMINARY DEVELOPMENT PLAN REVIEW PROCEDURE

A. Review of the preliminary development plan shall be in accordance with the provisions of the Planning Commission Review Procedure (Article 26).

B. The Planning Commission may attach any conditions (including requirements for improvement assurances under Article 15) it deems necessary to the preliminary development plan approval when reasonably related to applicable standards and criteria and supported by substantial evidence in the whole record.

C. The Planning Commission shall require that the resort developer provide an annual accounting to document compliance with the overnight lodging standards of Section 88.030(C). The annual accounting requirement shall commence one year after the initial lot or unit sales. The annual accounting must contain:

1. Documentation showing that the resort contains a minimum of 150 permanent units of overnight lodging or, during the phase-in period, documentation showing the resort is not yet required to have constructed 150 units of overnight lodging.

2. Documentation showing that the resort meets the lodging ratio described in Section 88.030(C)(5).

3. For a resort counting individually owned units as qualified overnight lodging units, the number of weeks that each overnight lodging unit is available for rental to the general public as described in Section 88.020(C).

D. The Planning Commission shall issue a final order of its decision on the preliminary development plan.

88.060 - APPROVAL CRITERIA

The Planning Commission shall approve a preliminary development plan for a destination resort if it determines that all of the following criteria are met:

A. The tract where the development is proposed is eligible for destination resort siting, as depicted on the acknowledged Destination Resort Overlay map.

B. The development meets the criteria established in section 88.030 or 88.035, qualifying as a destination resort or a small destination resort, respectively.

C. The uses included in the destination resort are either permitted uses listed in Section 88.040, or accessory uses listed in Section 88.045 that are ancillary to the destination resort and consistent with the purposes of this Article.

D. The development will be compatible with surrounding land uses, particularly farming and forestry operations. A destination resort must not cause a significant change in farm or forest practices on surrounding lands or significantly increase the cost of accepted farm or forest practices.

E. The development will not have a significant adverse impact on fish and wildlife, taking into account mitigation measures.

F. The development complies with other applicable standards of the Land Development Code.

G. Safe and efficient circulation shall be incorporated into the design for vehicles, pedestrians, and bicyclists to the extent practical.

88.070 - FINAL DEVELOPMENT PLAN REVIEW PROCEDURE

A. No later than 2 years following approval of the preliminary development plan, the applicant shall submit for review a final development plan that meets the requirements of Article 41 and addresses all changes or conditions required by the Planning Commission. If the preliminary development plan approved a phased development of the destination resort, the applicant shall submit the final development plan for the first phase of development within 2 years following approval of the preliminary development plan.

B. The Planning Director shall review a final development plan pursuant to Article 41. The Planning Director shall approve a final development plan if it conforms to the approved preliminary development plan and incorporates all changes or conditions required by the Planning Commission.

C. If the Planning Director finds that the final development plan is materially different from the approved preliminary development plan, the applicant shall submit an amended preliminary development plan for review. "Materially different," as used in this subsection, means a change in the type, scale, location, or other characteristics of the proposed development such that findings of fact on which the original approval was based would be materially affected. Submission of an amended plan shall be considered in the same manner as the original application, except that the review of an amended plan shall be limited to aspects of the proposed development that are materially different from the approved preliminary development plan. Submission of an amended plan must be accompanied by a filing fee in the same amount as for an original application.

88.075 - DURATION OF FINAL DEVELOPMENT PLAN APPROVAL

A final development plan approval shall become void if construction has not commenced within two years after the date the approval became final.

CHAPTER 90
MISCELLANEOUS

ARTICLE 99
SENSITIVE BIRD SPECIES HABITAT OVERLAY

99.005 - PURPOSE

The purpose of the Sensitive Bird Species Habitat Overlay is to insure that sensitive habitat areas identified in the County's Goal 5 Sensitive Species Inventory as critical for the survival of the Golden Eagle, Prairie Falcon, and the Northern Bald Eagle are protected from the effects of conflicting uses or activities which are not subject to the Forest Practices Act. This objective shall be achieved by implementation of the decision resulting from the economic, social, environmental and energy analysis
(ESEE).

99.010 - DEFINITION OF SENSITIVE HABITAT AREA

A. The sensitive habitat area is the area identified in the Klamath County Comprehensive Plan Resource Element inventory and site specific ESEE for each sensitive species site. The sensitive habitat area to be protected by the provisions of this article is defined as the area:

   1. Within a diameter of 660 feet or 1/8 of a mile of a golden eagle nest, bald eagle nest, or prairie falcon nest

   2. Within a diameter of 1320 feet or 1/4 of a mile of a golden eagle nest, bald eagle nest, or prairie falcon nest

99.015 - LIMITATIONS AND USES PERMITTED

A. Uses permitted and conditionally permitted in the underlying zone(s) are either prohibited or subject to the additional procedure and requirements of Section 99.020 and the provisions of the ESEE decision. The Sensitive Species Habitat Zone does not regulate or prohibit forest practices subject to ORS 527.610 to 527.770 and the rules adopted pursuant thereto; or to farm practices as defined by ORS 30.947(2).

B. When there is a conflict between the site-specific ESEE analysis and the provisions of this overlay the ESEE analysis shall take precedence.

99.020 - APPLICABILITY

A. A review under this article shall be triggered by the following proposals occurring within a sensitive habitat area, as defined in Section 99.010 of this article:

   1. An application for a site plan approval or any land use permit identified as a conflicting use in the EESE analysis.

   2. Land divisions creating new building sites within the sensitive habitat area.

   3. An application for a conditional use permit identified as a conflicting area in the ESEE analysis.

99.030 - SITE PLAN

A. For those proposals identified in 99.020 to be sited within an inventoried sensitive habitat area, as defined under Section 99.010, a site plan shall be prepared in accordance with the requirements of this section and Article 41. The site plan shall be approved prior to issuance of a building permit, land partition, subdivision, or conditional use permit.

B. The site plan shall provide the following information in addition to the requirements of Article 41 (Site Plan Review):

   1. Description of operating characteristics of the proposed use including times when activity within the sensitive habitat area would generate noise, dust, vibration, lights, traffic or be visible from the nest.

   2. Timing of construction activities including grading or filling land, hauling building materials.

   3. Description of existing vegetation and vegetation to be removed for the proposed development.

C. The County shall submit a copy of the site plan to the Oregon Department of Fish and Wildlife (ODFW) for comment. ODFW shall have 20 days from the date the site plan is mailed to submit written comments to the County.

D. Based on the comments, the criteria in Section 99.040, and the ESEE analysis, the County shall approve or reject the site plan. The County may allow the applicant to revise the site plan if the applicant has not met the standard for approval. Applicant shall waive the 150-day time limit if he/she chooses to revise the site plan.

99.040 - SITE PLAN REVIEW

A. Approval of a site plan shall be based on the following criteria:

1. The site plan shall consider the biology of the identified sensitive species, nesting trees, critical nesting periods, roosting sites and buffer areas.

2. Development activities, including grading and fill, mining, construction or activities generating noise or dust within the sensitive habitat area shall be prohibited during the nesting season identified in Section 99.055, unless the site qualifies for On-Site Validation under section 99.050.

3. New roads, driveways or public trails shall be located at the greatest distance possible from the nest unless topographic or vegetation or structural features will provide greater visual and/or noise buffer from the nest.

4. Existing vegetation or other landscape features which are located on the subject property and which obscure the view of the nest from the proposed development shall be preserved and maintained. All existing vegetation not disturbed by the proposed project shall be preserved and maintained.

5. No partitions or subdivisions shall be permitted which would allow the location of a dwelling sensitive habitat impact area or other structure not otherwise permitted by the site specific ESEE, within the 660–foot.

6. All exterior lighting, including security lighting, shall be sited and shielded so that the light is directed downward and does not shine on the subject nest.

7. The site plan shall conform with the requirements of the ESEE decision for the subject sensitive species habitat site contained in Goal 5 Inventory of the Klamath County Plan.

99.050 - ON-SITE VALIDATION

A. If a site has been abandoned or that nesting activity has ceased prior to the time specified in Section applicant may have to hire a private contractor that will follow the established protocol in 99.050(B) to provide the necessary information to ODFW. If confirmation is validated by the ODFW, the applicant will be able to build or start his/her project on or after the early release date.

B. The purpose of these guidelines are to establish criteria for modifying the species protection period for a pair of birds in the event the nest site is inactive, unsuccessful or the young have left the nest area. If it can be determined that a nest site is not active then the species protection period can be lifted for that year. The early release dates proposed here reasonably reflect that date after which nest initiation or re-nesting attempts probably would not occur.

1. To determine if a nest is active or inactive, the nest site must be monitored. A monitoring plan should include, at a minimum, three field observation periods of four hours duration. Sampling periods should be separated by at least ten days. If a nest is not active by the early release date then the protection period can be terminated. If it is determined that nesting is active, after the young have fledged and left the nest tree area, the protection period can be lifted.

2. If no monitoring is planned for the site, then the full species protection period should be in effect.

3. The nest monitoring must be conducted by a biologist. The field activities must not become a disturbing activity and possible cause of nest abandonment.

99.055 - PROTECTION PERIOD

Species	***Protection Period***	***Early Release***
Bald Eagle	Jan 1 – Aug 31	May 1
Golden Eagle	Feb 1 – Aug 31	May 1
Prairie Falcon	April 1 – July 30	June 1

99.060 – REMOVAL AND EXPANSION OF USES

A. If site is confirmed by Oregon Department Fish and Wildlife or a biologist to be abandoned or destroyed, then the site shall be removed from the inventories.

B. A prohibited use may be established if approved as a plan amendment under the provisions of Articles 47, 48, and 49 of the Klamath County Land Development Code.

Klamath County Land Development Code
Appendix A

KLAMATH COUNTY
DEPARTMENT OF
PUBLIC WORKS
STANDARD DRAWINGS

APPENDIX "A"
TO THE LAND DEVELOPMENT CODE

REVISED February 3, 2009

GENERAL PROVISIONS

APPLICABLE STANDARD SPECIFICATIONS

2008 edition of the " Oregon Standard Specification for Construction" published by the Oregon Department of Transporation.

GENERAL NOTE

These Standard Drawings illustrate the minimum specifications allowable for roads constructed in Klamath County's jurisdiction. These minimum specifications will not be adequate for all site conditions. The design engineer is responsible for investigating the existing site conditions and confirming that these minimum specifications will perform adequately for the design life of the facility. The minimum allowable design life is 20 years.

CONCRETE

The minimum specifications for concrete are; Commercial Grade Concrete conforming to Section 00440 of the Standard Specifications and meeting the following additional requirements.

1. Minimum compressive strength of 4000 psi at 28 days.
2. Maximum slump of 4". (If higher slump is required, Type A or Type F water reducing agents meeting the requirements of ASTM C 494 may be approved.)
3. Minimum Cement Content of 570 lbs.
4. Maximum Water / Cement Ratio of 0.48.
5. Design the mix for severe exposure within the parameters shown in the ACI 211.1-91 manual.

ASPHALT CONCRETE PAVEMENT

Asphalt Concrete Pavement must conform to Section 00744 of the Standard Specifications. The class of mix, grade of oil and mix design shall be submitted to the Klamath County Public Works Department for approval prior to construction.

CORRUGATED CULVERT PIPE

All Metal Pipe shall be galvanized steel conforming to the requirements of AASHTO M36 and Section 00445 of the Standard Specifications with a minimum of 12" diameter and 16 guage thigkness. All Polyethylene Pipe shall conform to the requirements of AASHTO M294 Type-S with a maximum diamater of 24" and a minimum diameter of 12". Metal Pipe is required when pipe is open to the elements.

STORMWATER CONVEYANCE AND RETENTION FACILITIES MAINTENANCE

Facilities within a County Road Right-of-Way will be maintained by Klamath County. On commercial and industrial sites, facilities shall be maintained by the property owner. For residential subdivisions, a homeowners association, or other legal entity approved by the County shall provide ongoing maintenance.

REVISED February 3, 2009

Klamath County Land Development Code
Appendix A

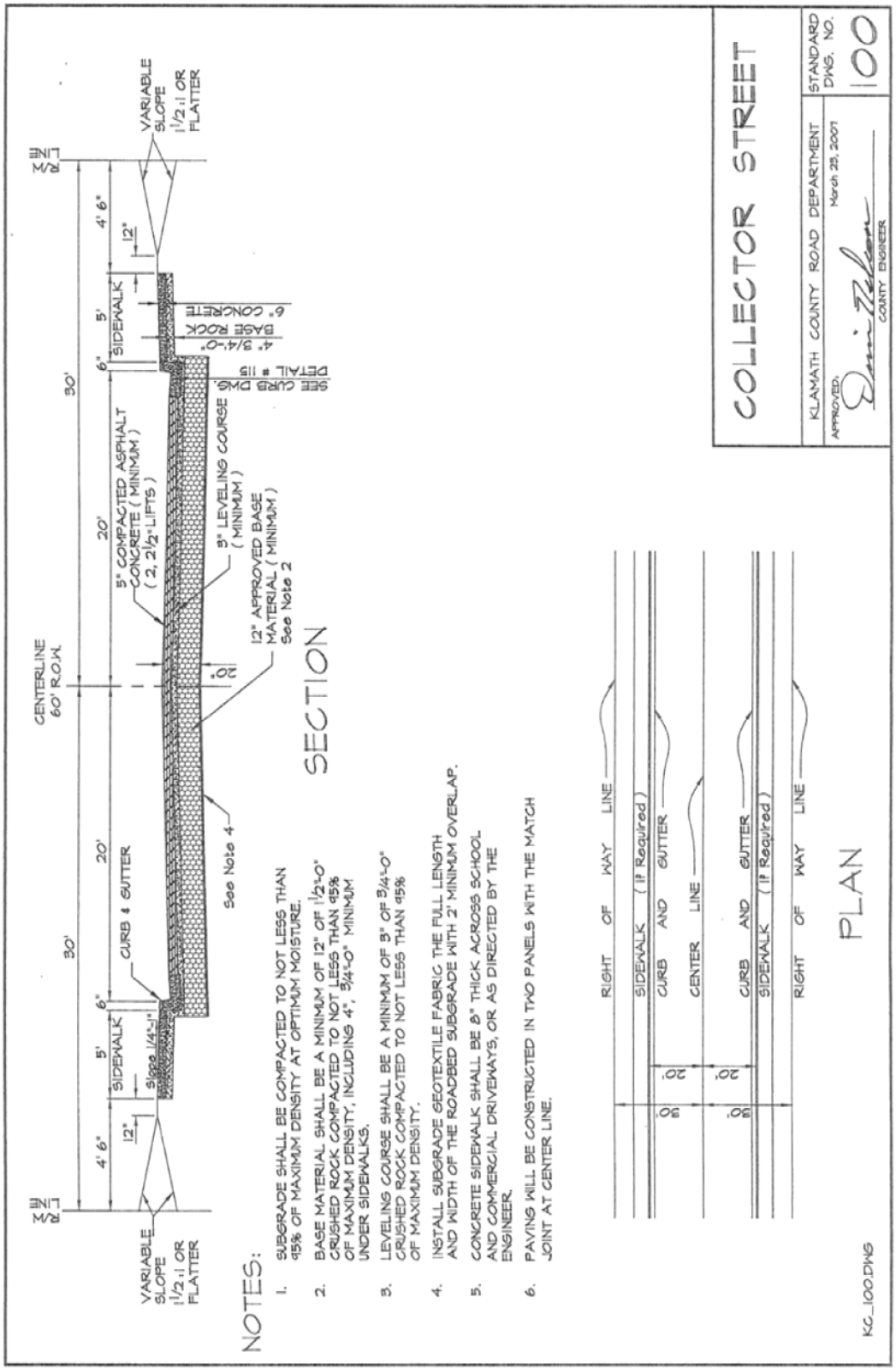

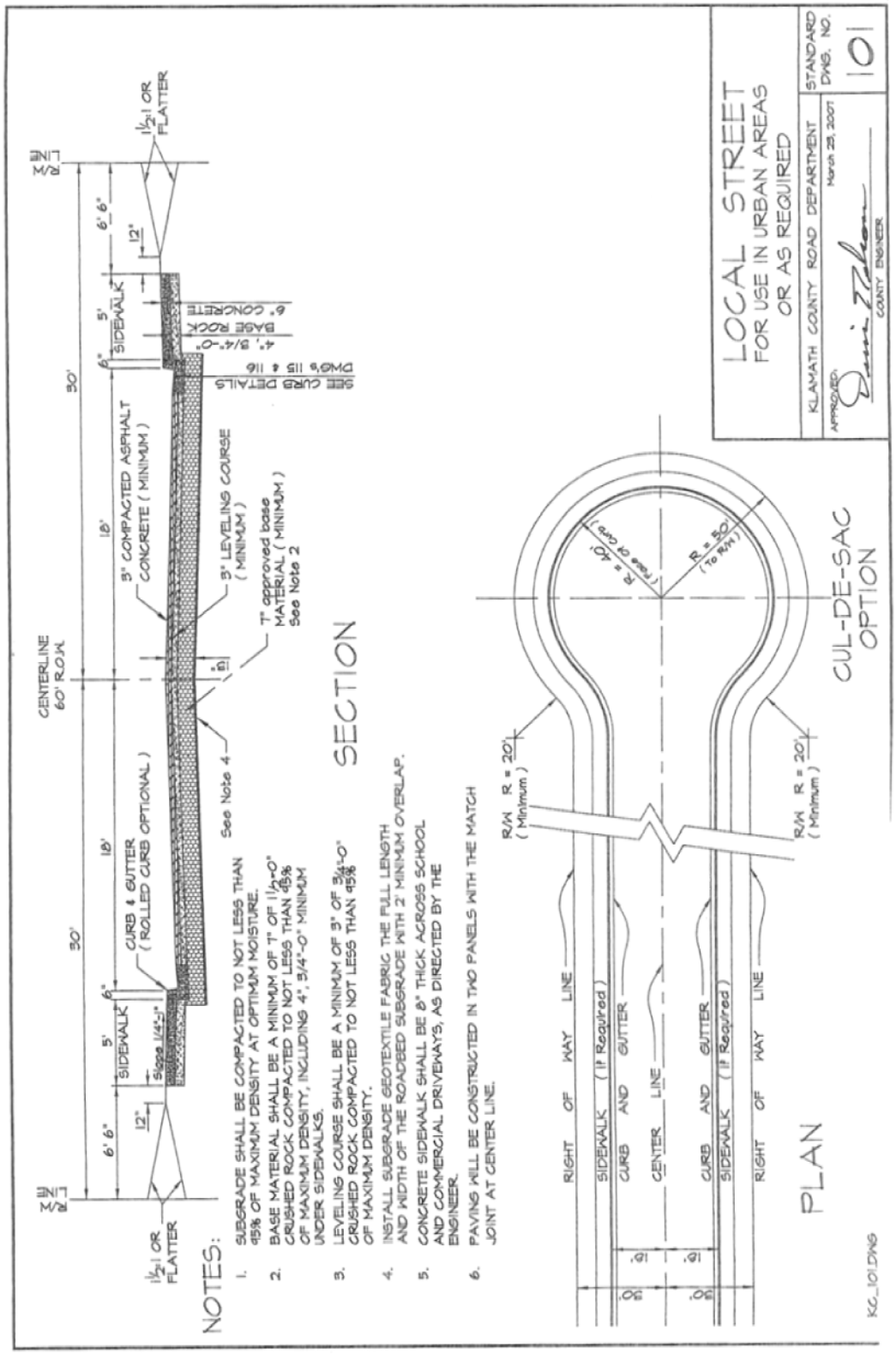
LOCAL STREET
FOR USE IN URBAN AREAS
OR AS REQUIRED
KLAMATH COUNTY ROAD DEPARTMENT
March 29, 2001
APPROVED:
COUNTY ENGINEER
STANDARD DWG. NO.
101
SECTION
3" COMPACTED ASPHALT CONCRETE (MINIMUM)
3" LEVELING COURSE (MINIMUM)
7" approved base MATERIAL (MINIMUM) See Note 2
See Note 4
CURB & GUTTER (ROLLED CURB OPTIONAL)
SIDEWALK
6" CONCRETE
BASE ROCK
SEE CURB DETAILS
CENTERLINE 60' R.O.W.
R/W LINE
1½:1 OR FLATTER
NOTES:
1. SUBGRADE SHALL BE COMPACTED TO NOT LESS THAN 95% OF MAXIMUM DENSITY AT OPTIMUM MOISTURE.
2. BASE MATERIAL SHALL BE A MINIMUM OF 7" OF 1½"-0" CRUSHED ROCK COMPACTED TO NOT LESS THAN 95% OF MAXIMUM DENSITY, INCLUDING 4", 3/4"-0" MINIMUM UNDER SIDEWALKS.
3. LEVELING COURSE SHALL BE A MINIMUM OF 3" OF ¾"-0" CRUSHED ROCK COMPACTED TO NOT LESS THAN 95% OF MAXIMUM DENSITY.
4. INSTALL SUBGRADE GEOTEXTILE FABRIC THE FULL LENGTH AND WIDTH OF THE ROADBED SUBGRADE WITH 2' MINIMUM OVERLAP.
5. CONCRETE SIDEWALK SHALL BE 8" THICK ACROSS SCHOOL AND COMMERCIAL DRIVEWAYS, AS DIRECTED BY THE ENGINEER.
6. PAVING WILL BE CONSTRUCTED IN TWO PANELS WITH THE MATCH JOINT AT CENTER LINE.
PLAN
CUL-DE-SAC OPTION
R/W R = 20' (Minimum)
R = 50' (to R/W)
R = 40' (Face of Curb)
RIGHT OF WAY LINE
SIDEWALK (If Required)
CURB AND GUTTER
CENTER LINE
KC_101.DWG

Klamath County Land Development Code
Appendix A

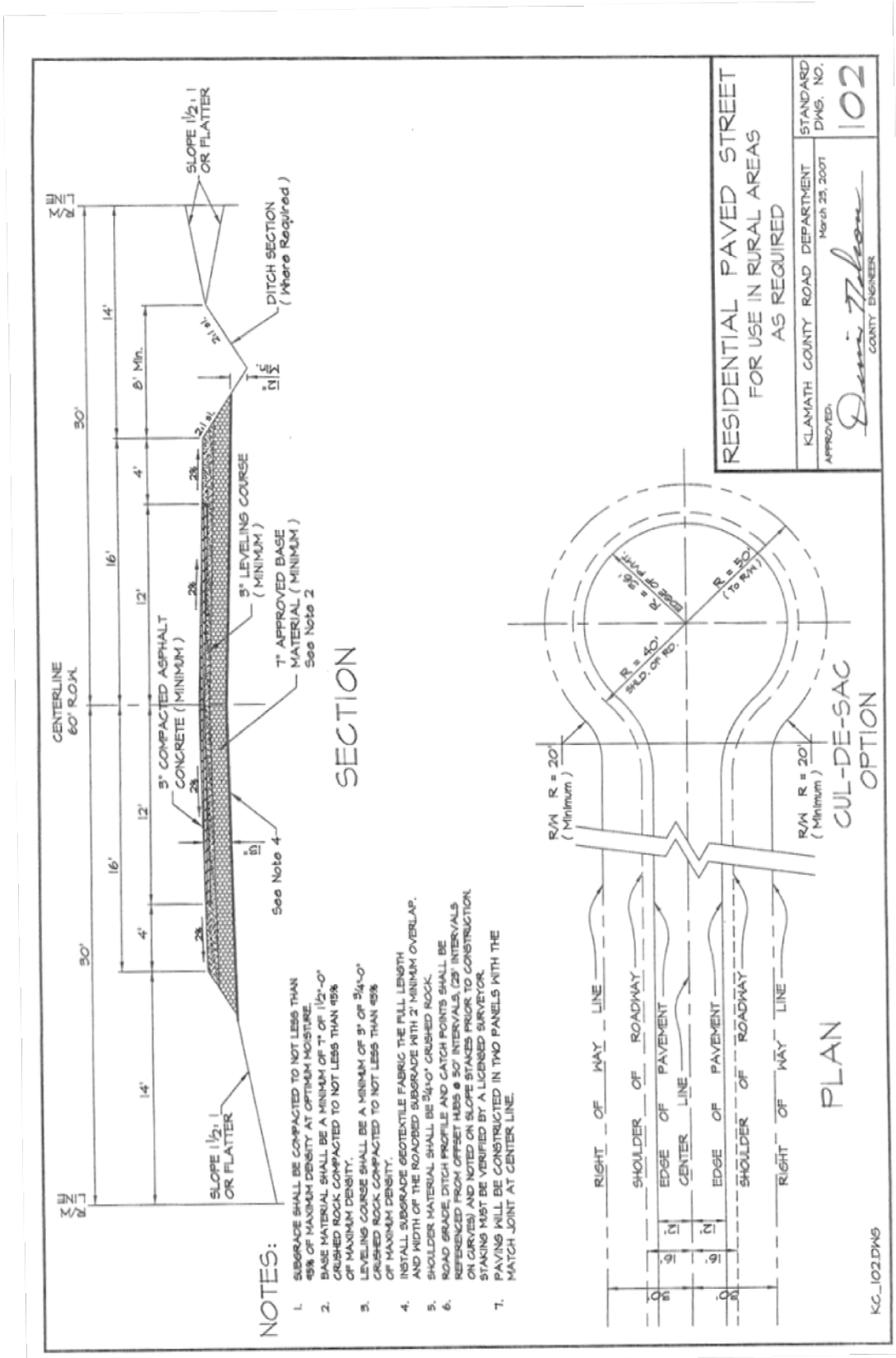

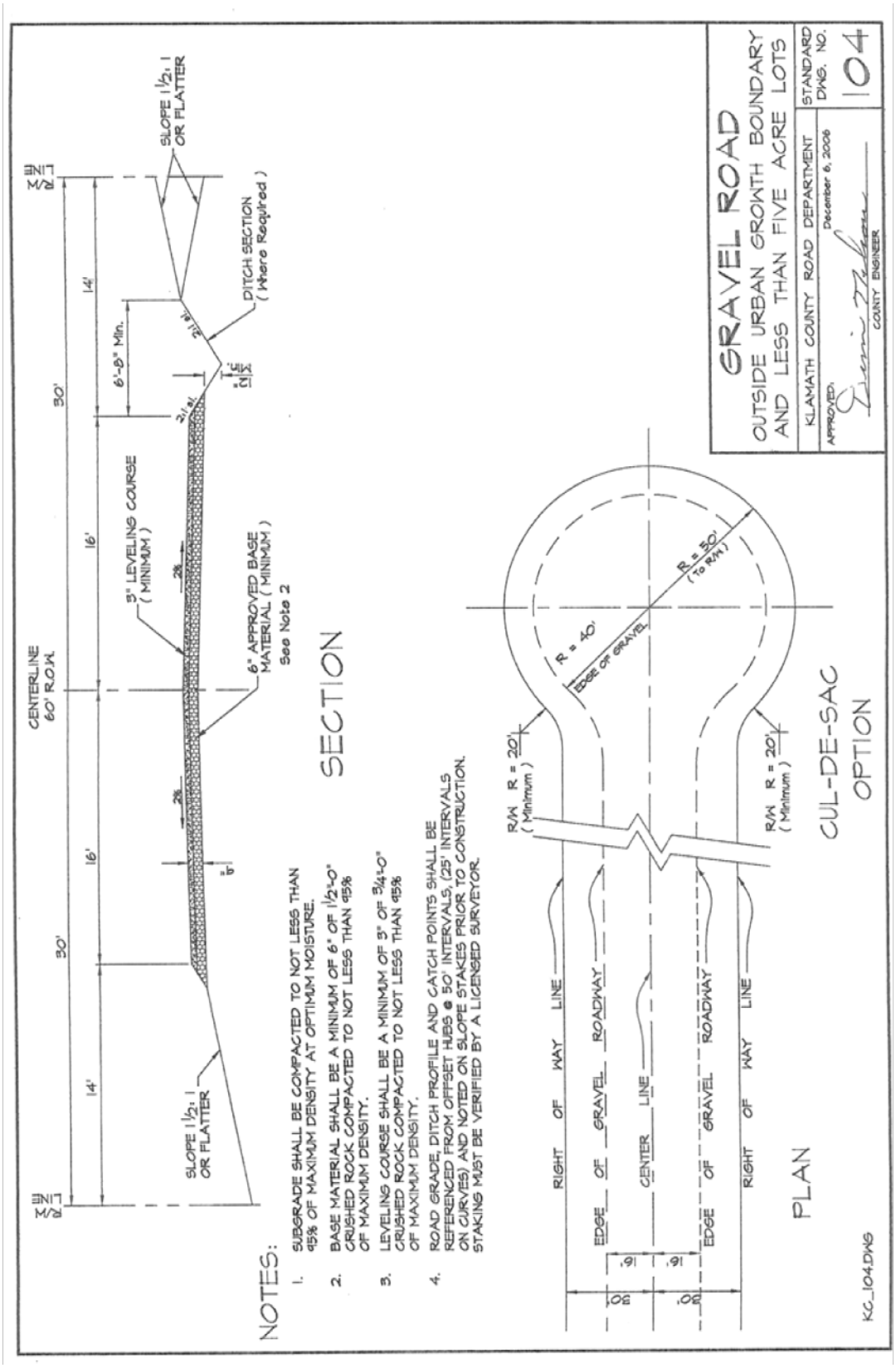
GRAVEL ROAD
OUTSIDE URBAN GROWTH BOUNDARY AND LESS THAN FIVE ACRE LOTS
KLAMATH COUNTY ROAD DEPARTMENT
STANDARD DWG. NO.
104
APPROVED:
December 6, 2006
COUNTY ENGINEER
SECTION
CENTERLINE 60' R.O.W.
30'
14'
16'
6'-8" Min.
SLOPE 1½:1 OR FLATTER
DITCH SECTION (Where Required)
3" LEVELING COURSE (MINIMUM)
6" APPROVED BASE MATERIAL (MINIMUM) See Note 2
NOTES:
1. SUBGRADE SHALL BE COMPACTED TO NOT LESS THAN 95% OF MAXIMUM DENSITY AT OPTIMUM MOISTURE.
2. BASE MATERIAL SHALL BE A MINIMUM OF 6" OF 1½"-0" CRUSHED ROCK COMPACTED TO NOT LESS THAN 95% OF MAXIMUM DENSITY.
3. LEVELING COURSE SHALL BE A MINIMUM OF 3" OF ¾"-0" CRUSHED ROCK COMPACTED TO NOT LESS THAN 95% OF MAXIMUM DENSITY.
4. ROAD GRADE, DITCH PROFILE AND CATCH POINTS SHALL BE REFERENCED FROM OFFSET HUBS @ 50' INTERVALS, (25' INTERVALS ON CURVES) AND NOTED ON SLOPE STAKES PRIOR TO CONSTRUCTION. STAKING MUST BE VERIFIED BY A LICENSED SURVEYOR.
PLAN
CUL-DE-SAC OPTION
R/W R = 20' (Minimum)
R = 40'
R = 50' (To R/W)
EDGE OF GRAVEL
RIGHT OF WAY LINE
EDGE OF GRAVEL ROADWAY
CENTER LINE
KC_104.DWG

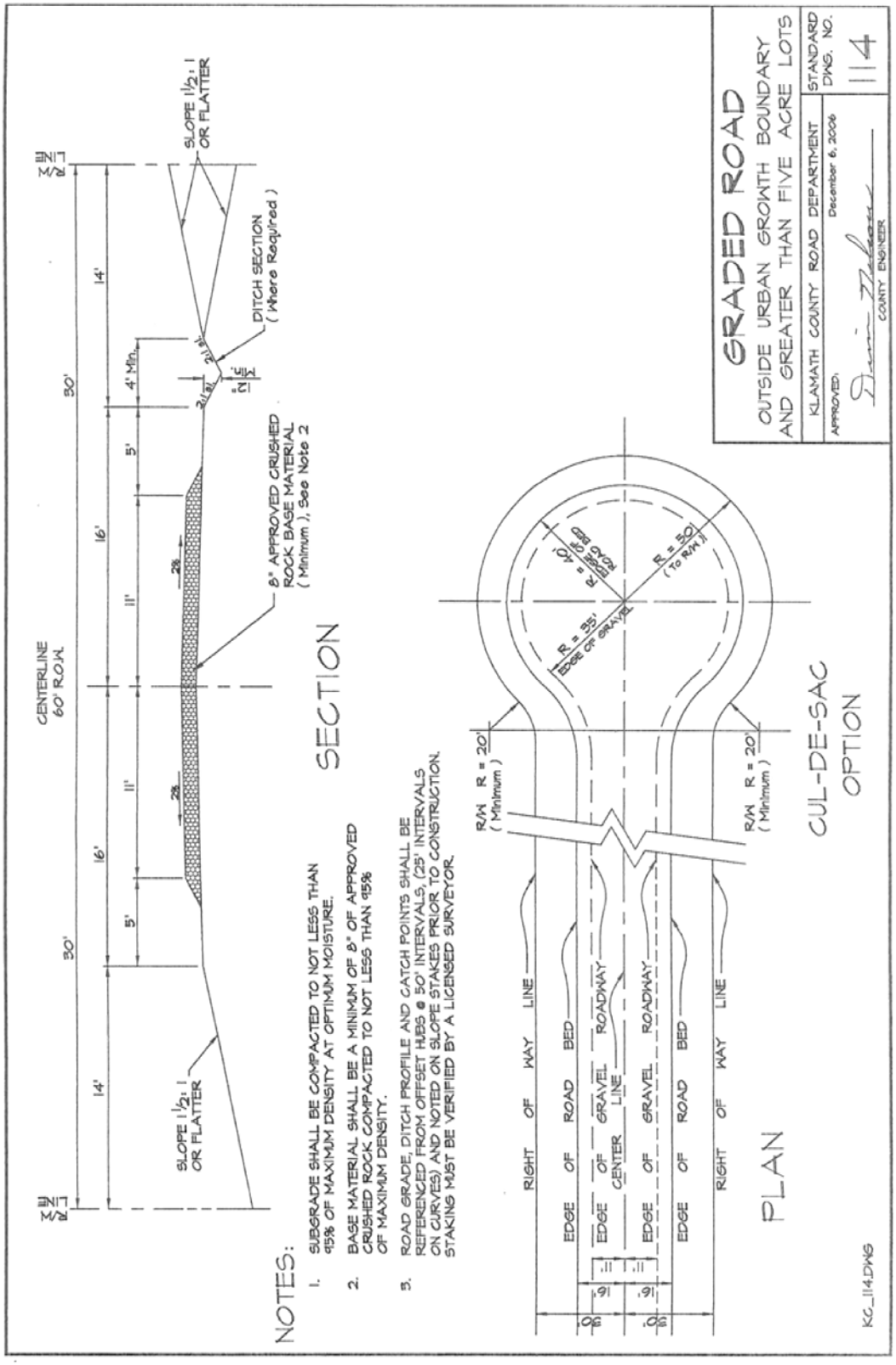
GRADED ROAD
OUTSIDE URBAN GROWTH BOUNDARY AND GREATER THAN FIVE ACRE LOTS
KLAMATH COUNTY ROAD DEPARTMENT
STANDARD DWG. NO.
114
APPROVED:
December 6, 2006
COUNTY ENGINEER
SLOPE 1½:1 OR FLATTER
DITCH SECTION (Where Required)
8" APPROVED CRUSHED ROCK BASE MATERIAL (Minimum), See Note 2
CENTERLINE 60' R.O.W.
R/W
30'
14'
16'
5'
11'
4' Min.
SECTION
NOTES:
1. SUBGRADE SHALL BE COMPACTED TO NOT LESS THAN 95% OF MAXIMUM DENSITY AT OPTIMUM MOISTURE.
2. BASE MATERIAL SHALL BE A MINIMUM OF 8" OF APPROVED CRUSHED ROCK COMPACTED TO NOT LESS THAN 95% OF MAXIMUM DENSITY.
3. ROAD GRADE, DITCH PROFILE AND CATCH POINTS SHALL BE REFERENCED FROM OFFSET HUBS @ 50' INTERVALS, (25' INTERVALS ON CURVES) AND NOTED ON SLOPE STAKES PRIOR TO CONSTRUCTION. STAKING MUST BE VERIFIED BY A LICENSED SURVEYOR.
R/W R = 20' (Minimum)
R = 55' EDGE OF GRAVEL
R = 40' EDGE OF ROAD BED
R = 50' (to R/W)
RIGHT OF WAY LINE
EDGE OF ROAD BED
EDGE OF GRAVEL ROADWAY
CENTER LINE
PLAN
CUL-DE-SAC OPTION
KC_114.DWG

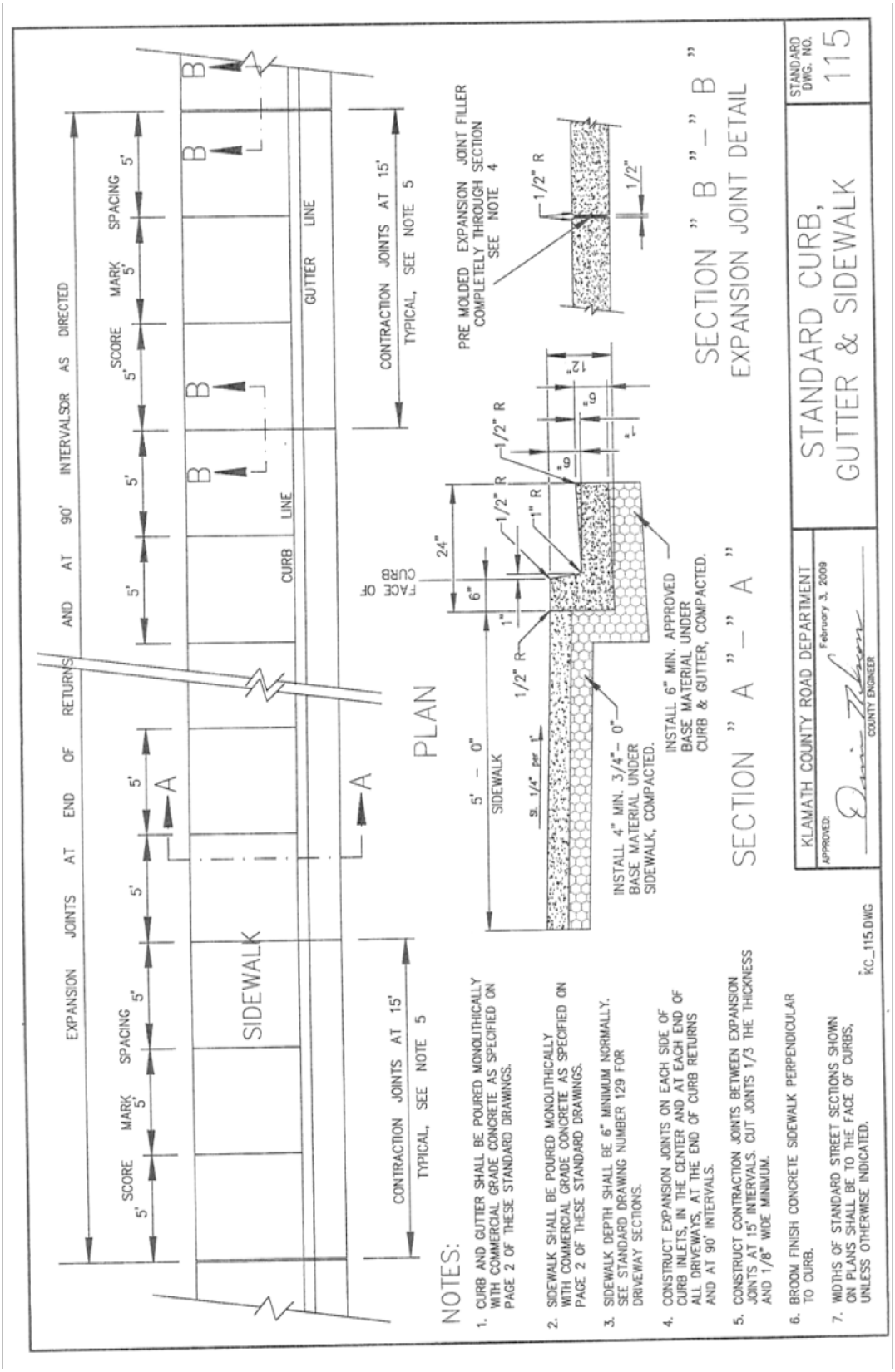
EXPANSION JOINTS AT END OF RETURNS AND AT 90' INTERVALS OR AS DIRECTED
SCORE MARK SPACING 5'
SIDEWALK
CURB LINE
GUTTER LINE
CONTRACTION JOINTS AT 15' TYPICAL, SEE NOTE 5
PLAN
FACE OF CURB
24"
6"
1"
1/2" R
1" R
5' - 0"
SIDEWALK
SL 1/4" per 1'
INSTALL 4" MIN. 3/4"- 0" BASE MATERIAL UNDER SIDEWALK, COMPACTED.
INSTALL 6" MIN. APPROVED BASE MATERIAL UNDER CURB & GUTTER, COMPACTED.
SECTION " A " - " A "
PRE MOLDED EXPANSION JOINT FILLER COMPLETELY THROUGH SECTION SEE NOTE 4
1/2"
SECTION " B " - " B "
EXPANSION JOINT DETAIL
NOTES:
1. CURB AND GUTTER SHALL BE POURED MONOLITHICALLY WITH COMMERCIAL GRADE CONCRETE AS SPECIFIED ON PAGE 2 OF THESE STANDARD DRAWINGS.
2. SIDEWALK SHALL BE POURED MONOLITHICALLY WITH COMMERCIAL GRADE CONCRETE AS SPECIFIED ON PAGE 2 OF THESE STANDARD DRAWINGS.
3. SIDEWALK DEPTH SHALL BE 6" MINIMUM NORMALLY. SEE STANDARD DRAWING NUMBER 129 FOR DRIVEWAY SECTIONS.
4. CONSTRUCT EXPANSION JOINTS ON EACH SIDE OF CURB INLETS, IN THE CENTER AND AT EACH END OF ALL DRIVEWAYS, AT THE END OF CURB RETURNS AND AT 90' INTERVALS.
5. CONSTRUCT CONTRACTION JOINTS BETWEEN EXPANSION JOINTS AT 15' INTERVALS. CUT JOINTS 1/3 THE THICKNESS AND 1/8" WIDE MINIMUM.
6. BROOM FINISH CONCRETE SIDEWALK PERPENDICULAR TO CURB.
7. WIDTHS OF STANDARD STREET SECTIONS SHOWN ON PLANS SHALL BE TO THE FACE OF CURBS, UNLESS OTHERWISE INDICATED.
KC_115.DWG
KLAMATH COUNTY ROAD DEPARTMENT
APPROVED:
February 3, 2009
COUNTY ENGINEER
STANDARD CURB, GUTTER & SIDEWALK
STANDARD DWG. NO.
115

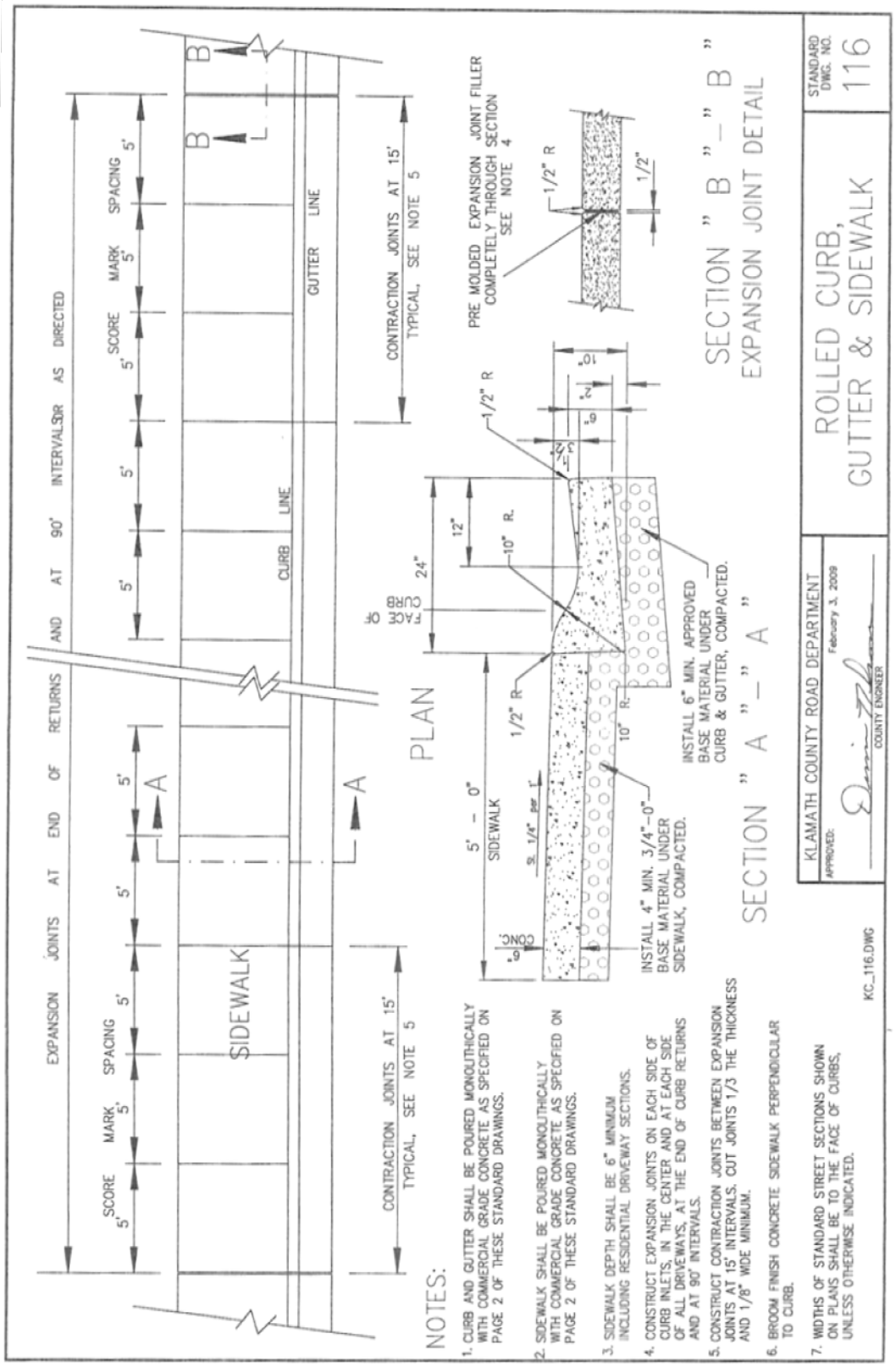
EXPANSION JOINTS AT END OF RETURNS AND AT 90' INTERVALS OR AS DIRECTED
SCORE MARK SPACING
5' 5' 5' 5' 5' 5' 5' 5' 5'
SIDEWALK
CURB LINE
GUTTER LINE
CONTRACTION JOINTS AT 15' TYPICAL, SEE NOTE 5
A
B
PLAN
FACE OF CURB
24"
12"
10" R.
1/2" R
5' - 0"
SIDEWALK
CONC.
6"
10"
INSTALL 4" MIN. 3/4"-0" BASE MATERIAL UNDER SIDEWALK, COMPACTED.
INSTALL 6" MIN. APPROVED BASE MATERIAL UNDER CURB & GUTTER, COMPACTED.
SECTION "A"_"A"
PRE MOLDED EXPANSION JOINT FILLER COMPLETELY THROUGH SECTION SEE NOTE 4
1/2"
SECTION "B"_"B"
EXPANSION JOINT DETAIL
NOTES:
1. CURB AND GUTTER SHALL BE POURED MONOLITHICALLY WITH COMMERCIAL GRADE CONCRETE AS SPECIFIED ON PAGE 2 OF THESE STANDARD DRAWINGS.
2. SIDEWALK SHALL BE POURED MONOLITHICALLY WITH COMMERCIAL GRADE CONCRETE AS SPECIFIED ON PAGE 2 OF THESE STANDARD DRAWINGS.
3. SIDEWALK DEPTH SHALL BE 6" MINIMUM INCLUDING RESIDENTIAL DRIVEWAY SECTIONS.
4. CONSTRUCT EXPANSION JOINTS ON EACH SIDE OF CURB INLETS, IN THE CENTER AND AT EACH SIDE OF ALL DRIVEWAYS, AT THE END OF CURB RETURNS AND AT 90' INTERVALS.
5. CONSTRUCT CONTRACTION JOINTS BETWEEN EXPANSION JOINTS AT 15' INTERVALS. CUT JOINTS 1/3 THE THICKNESS AND 1/8" WIDE MINIMUM.
6. BROOM FINISH CONCRETE SIDEWALK PERPENDICULAR TO CURB.
7. WIDTHS OF STANDARD STREET SECTIONS SHOWN ON PLANS SHALL BE TO THE FACE OF CURBS, UNLESS OTHERWISE INDICATED.
KC_116.DWG
KLAMATH COUNTY ROAD DEPARTMENT
APPROVED:
February 3, 2009
COUNTY ENGINEER
ROLLED CURB, GUTTER & SIDEWALK
STANDARD DWG. NO.
116

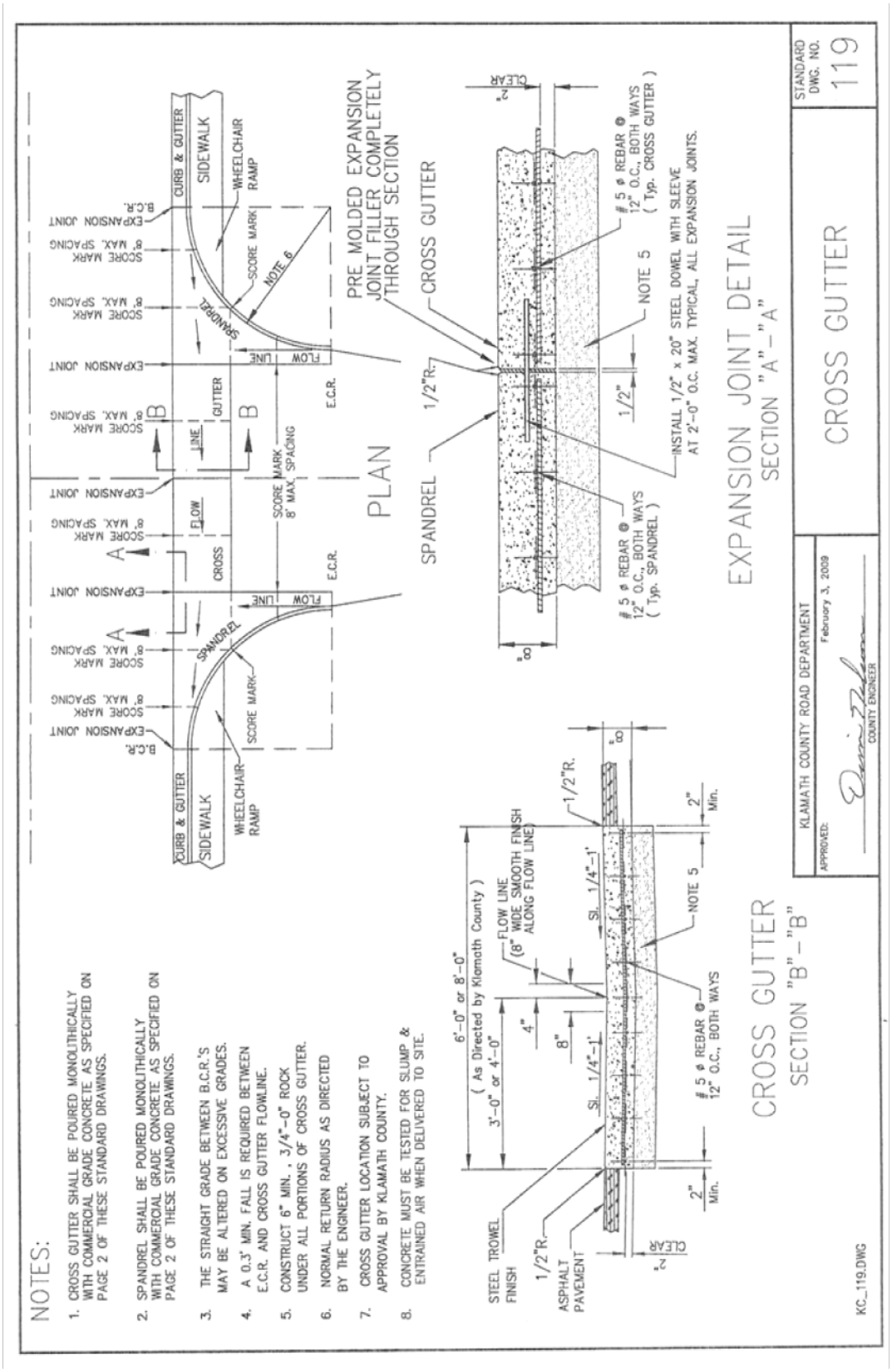
NOTES:
1. CROSS GUTTER SHALL BE POURED MONOLITHICALLY WITH COMMERCIAL GRADE CONCRETE AS SPECIFIED ON PAGE 2 OF THESE STANDARD DRAWINGS.
2. SPANDREL SHALL BE POURED MONOLITHICALLY WITH COMMERCIAL GRADE CONCRETE AS SPECIFIED ON PAGE 2 OF THESE STANDARD DRAWINGS.
3. THE STRAIGHT GRADE BETWEEN B.C.R.'S MAY BE ALTERED ON EXCESSIVE GRADES.
4. A 0.3' MIN. FALL IS REQUIRED BETWEEN E.C.R. AND CROSS GUTTER FLOWLINE.
5. CONSTRUCT 6" MIN. , 3/4"-0" ROCK UNDER ALL PORTIONS OF CROSS GUTTER.
6. NORMAL RETURN RADIUS AS DIRECTED BY THE ENGINEER.
7. CROSS GUTTER LOCATION SUBJECT TO APPROVAL BY KLAMATH COUNTY.
8. CONCRETE MUST BE TESTED FOR SLUMP & ENTRAINED AIR WHEN DELIVERED TO SITE.
PLAN
PRE MOLDED EXPANSION JOINT FILLER COMPLETELY THROUGH SECTION
CROSS GUTTER
SPANDREL
EXPANSION JOINT DETAIL
SECTION "A"-"A"
CROSS GUTTER
SECTION "B"-"B"
CURB & GUTTER
SIDEWALK
WHEELCHAIR RAMP
SCORE MARK
EXPANSION JOINT
B.C.R.
E.C.R.
FLOW LINE
GUTTER
CROSS
SCORE MARK 8' MAX. SPACING
NOTE 5
NOTE 6
1/2"R.
CLEAR
2"
8"
4"
6'-0" or 8'-0"
(As Directed by Klamath County)
3'-0" or 4'-0"
FLOW LINE (8" WIDE SMOOTH FINISH ALONG FLOW LINE)
SL. 1/4"-1'
STEEL TROWEL FINISH
ASPHALT PAVEMENT
5 ø REBAR @ 12" O.C., BOTH WAYS
(Typ. CROSS GUTTER)
(Typ. SPANDREL)
INSTALL 1/2" x 20" STEEL DOWEL WITH SLEEVE AT 2'-0" O.C. MAX. TYPICAL, ALL EXPANSION JOINTS.
KLAMATH COUNTY ROAD DEPARTMENT
APPROVED:
February 3, 2009
COUNTY ENGINEER
STANDARD DWG. NO.
119
KC_119.DWG

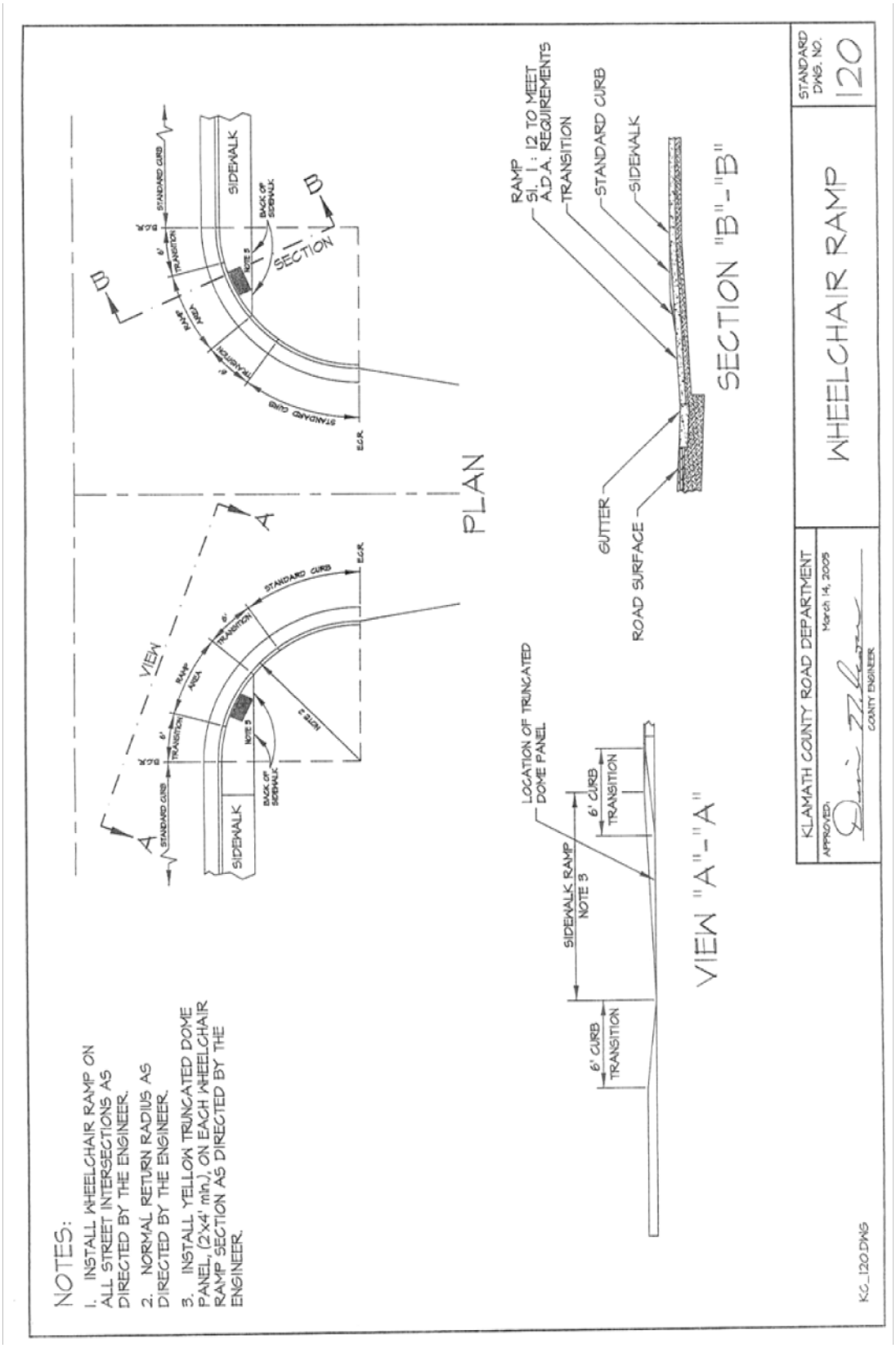
NOTES:
1. INSTALL WHEELCHAIR RAMP ON ALL STREET INTERSECTIONS AS DIRECTED BY THE ENGINEER.
2. NORMAL RETURN RADIUS AS DIRECTED BY THE ENGINEER.
3. INSTALL YELLOW TRUNCATED DOME PANEL, (2'x4' min.), ON EACH WHEELCHAIR RAMP SECTION AS DIRECTED BY THE ENGINEER.
VIEW
PLAN
SECTION
SIDEWALK
STANDARD CURB
TRANSITION
RAMP AREA
BACK OF SIDEWALK
NOTE 3
E.O.R.
P.C.R.
SECTION "B"-"B"
RAMP SL. 1 : 12 TO MEET A.D.A. REQUIREMENTS
TRANSITION
STANDARD CURB
SIDEWALK
GUTTER
ROAD SURFACE
VIEW "A"-"A"
LOCATION OF TRUNCATED DOME PANEL
SIDEWALK RAMP NOTE 3
6' CURB TRANSITION
WHEELCHAIR RAMP
STANDARD DWG. NO. 120
KLAMATH COUNTY ROAD DEPARTMENT
APPROVED:
March 14, 2005
COUNTY ENGINEER
KC_120.DWG

Klamath County Land Development Code
Appendix A

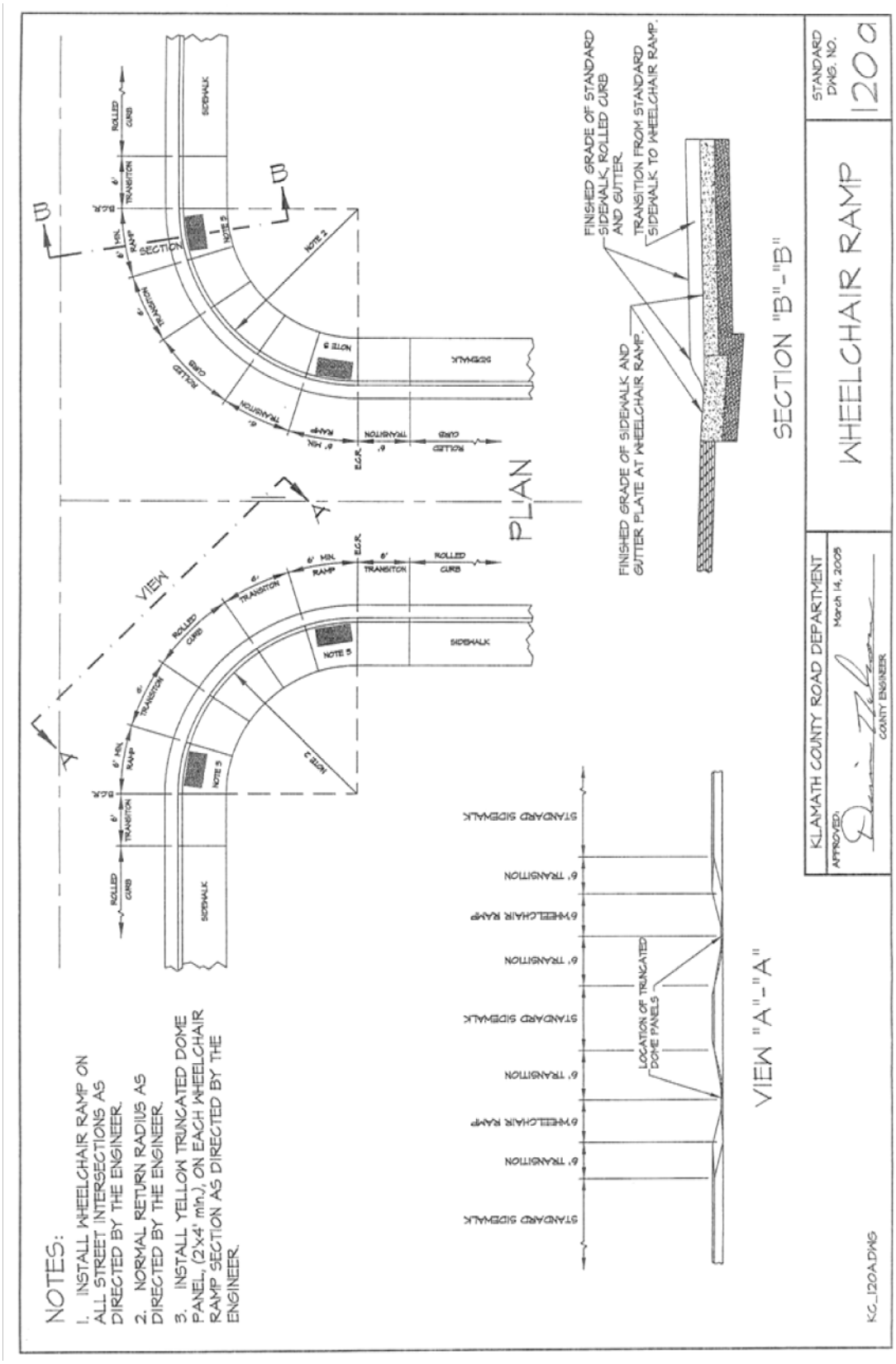

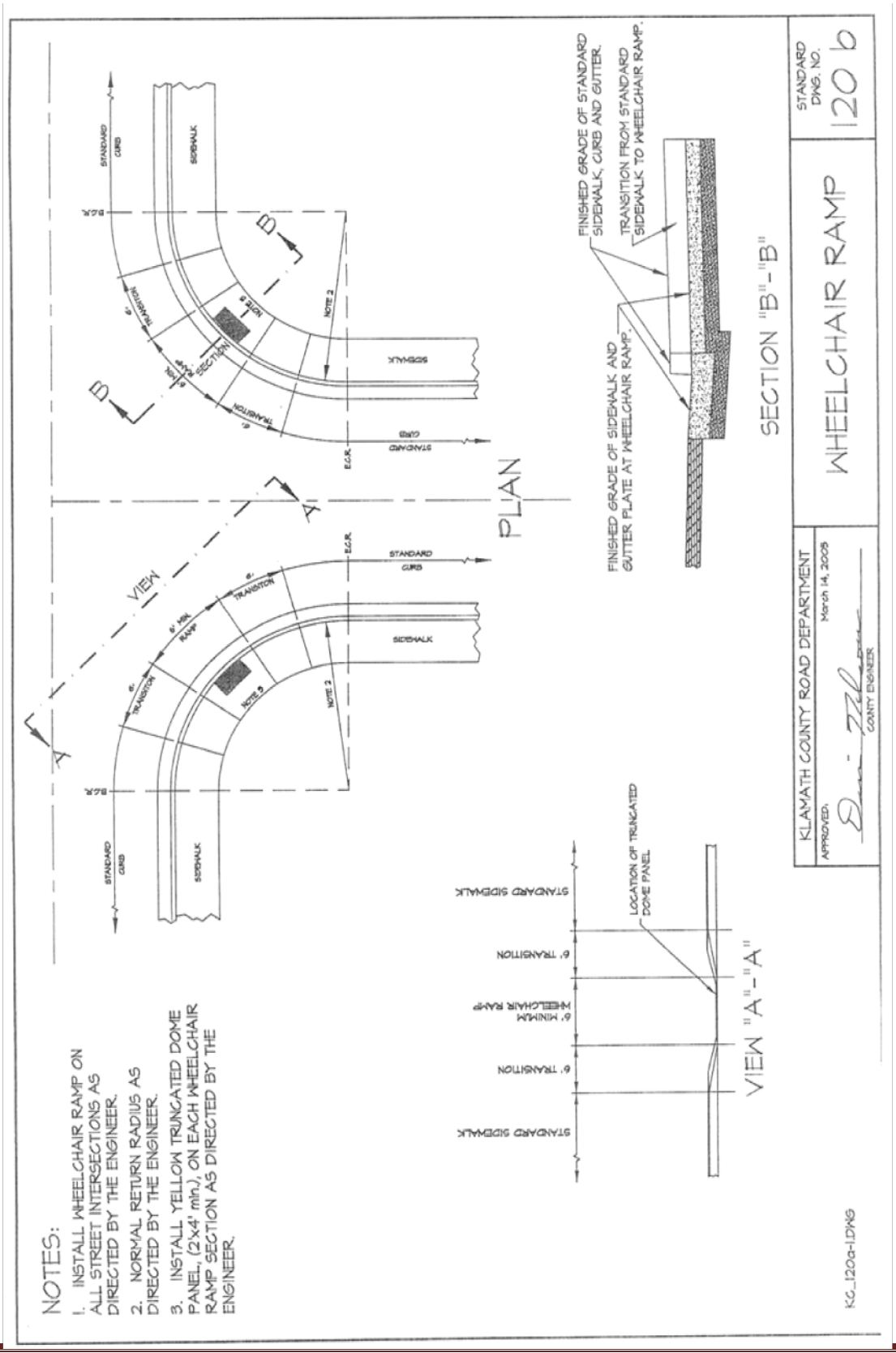
NOTES:
1. INSTALL WHEELCHAIR RAMP ON ALL STREET INTERSECTIONS AS DIRECTED BY THE ENGINEER.
2. NORMAL RETURN RADIUS AS DIRECTED BY THE ENGINEER.
3. INSTALL YELLOW TRUNCATED DOME PANEL, (2'x4' min.), ON EACH WHEELCHAIR RAMP SECTION AS DIRECTED BY THE ENGINEER.
VIEW
A
B
PLAN
SECTION "B"-"B"
VIEW "A"-"A"
STANDARD CURB
SIDEWALK
TRANSITION
6' MIN. RAMP
NOTE 2
NOTE 3
E.O.R.
B.O.R.
FINISHED GRADE OF STANDARD SIDEWALK, CURB AND GUTTER.
TRANSITION FROM STANDARD SIDEWALK TO WHEELCHAIR RAMP.
FINISHED GRADE OF SIDEWALK AND GUTTER PLATE AT WHEELCHAIR RAMP.
STANDARD SIDEWALK
6' TRANSITION
6' MINIMUM WHEELCHAIR RAMP
LOCATION OF TRUNCATED DOME PANEL
KLAMATH COUNTY ROAD DEPARTMENT
APPROVED:
March 14, 2005
COUNTY ENGINEER
WHEELCHAIR RAMP
STANDARD DWG. NO.
1206
KC_120a-1.DWG

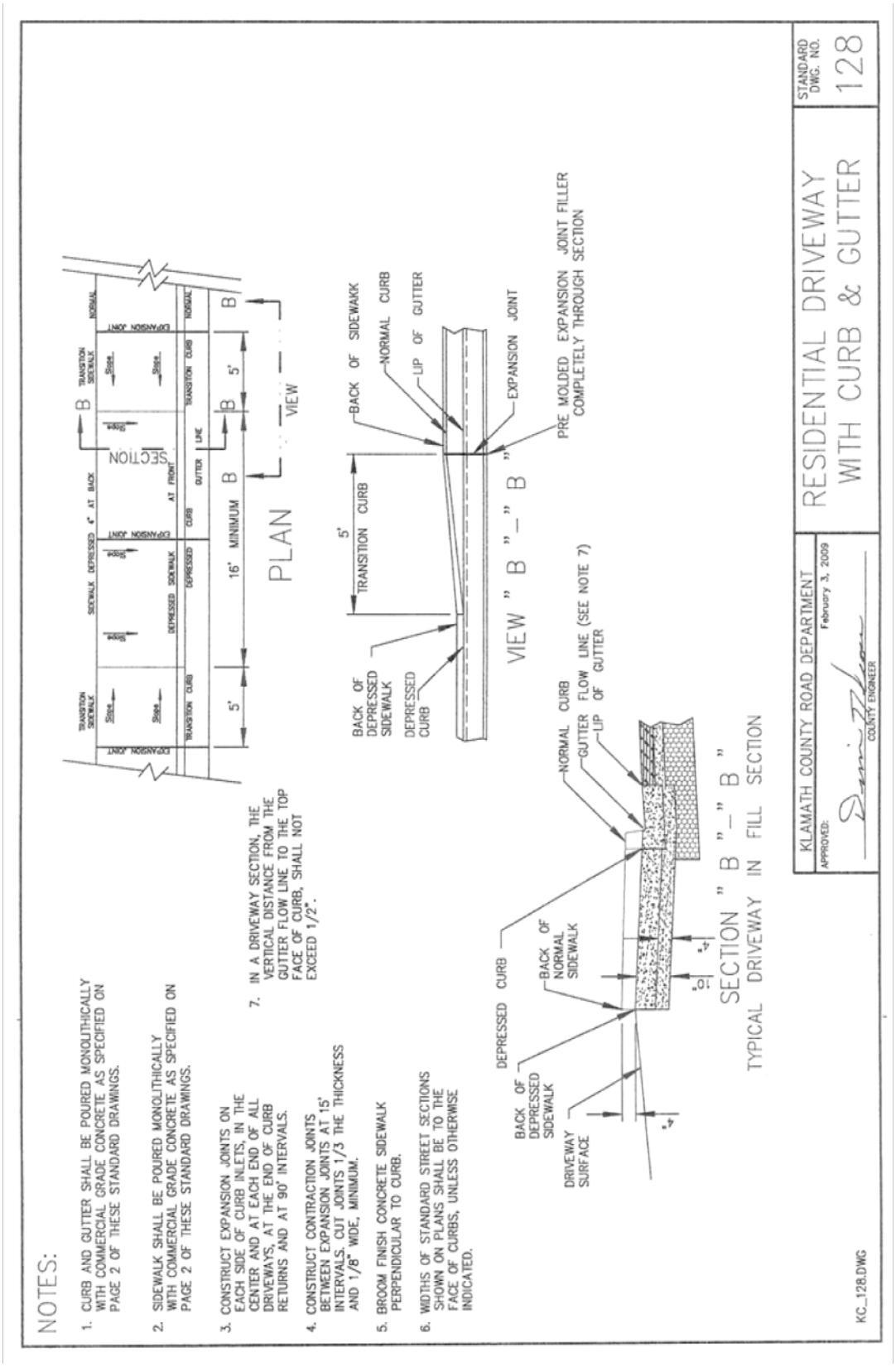
NOTES:
1. CURB AND GUTTER SHALL BE POURED MONOLITHICALLY WITH COMMERCIAL GRADE CONCRETE AS SPECIFIED ON PAGE 2 OF THESE STANDARD DRAWINGS.
2. SIDEWALK SHALL BE POURED MONOLITHICALLY WITH COMMERCIAL GRADE CONCRETE AS SPECIFIED ON PAGE 2 OF THESE STANDARD DRAWINGS.
3. CONSTRUCT EXPANSION JOINTS ON EACH SIDE OF CURB INLETS, IN THE CENTER AND AT EACH END OF ALL DRIVEWAYS, AT THE END OF CURB RETURNS AND AT 90' INTERVALS.
4. CONSTRUCT CONTRACTION JOINTS BETWEEN EXPANSION JOINTS AT 15' INTERVALS. CUT JOINTS 1/3 THE THICKNESS AND 1/8" WIDE, MINIMUM.
5. BROOM FINISH CONCRETE SIDEWALK PERPENDICULAR TO CURB.
6. WIDTHS OF STANDARD STREET SECTIONS SHOWN ON PLANS SHALL BE TO THE FACE OF CURBS, UNLESS OTHERWISE INDICATED.
7. IN A DRIVEWAY SECTION, THE VERTICAL DISTANCE FROM THE GUTTER FLOW LINE TO THE TOP FACE OF CURB, SHALL NOT EXCEED 1/2".
PLAN
SECTION
VIEW
16' MINIMUM
5'
VIEW "B"_"B"
TRANSITION CURB
BACK OF SIDEWAKK
NORMAL CURB
LIP OF GUTTER
EXPANSION JOINT
PRE MOLDED EXPANSION JOINT FILLER COMPLETELY THROUGH SECTION
BACK OF DEPRESSED SIDEWALK
DEPRESSED CURB
NORMAL CURB
GUTTER FLOW LINE (SEE NOTE 7)
LIP OF GUTTER
DEPRESSED CURB
BACK OF NORMAL SIDEWALK
BACK OF DEPRESSED SIDEWALK
DRIVEWAY SURFACE
SECTION "B"_"B"
TYPICAL DRIVEWAY IN FILL SECTION
KLAMATH COUNTY ROAD DEPARTMENT
APPROVED:
February 3, 2009
COUNTY ENGINEER
RESIDENTIAL DRIVEWAY
WITH CURB & GUTTER
STANDARD DWG. NO.
128
KC_128.DWG

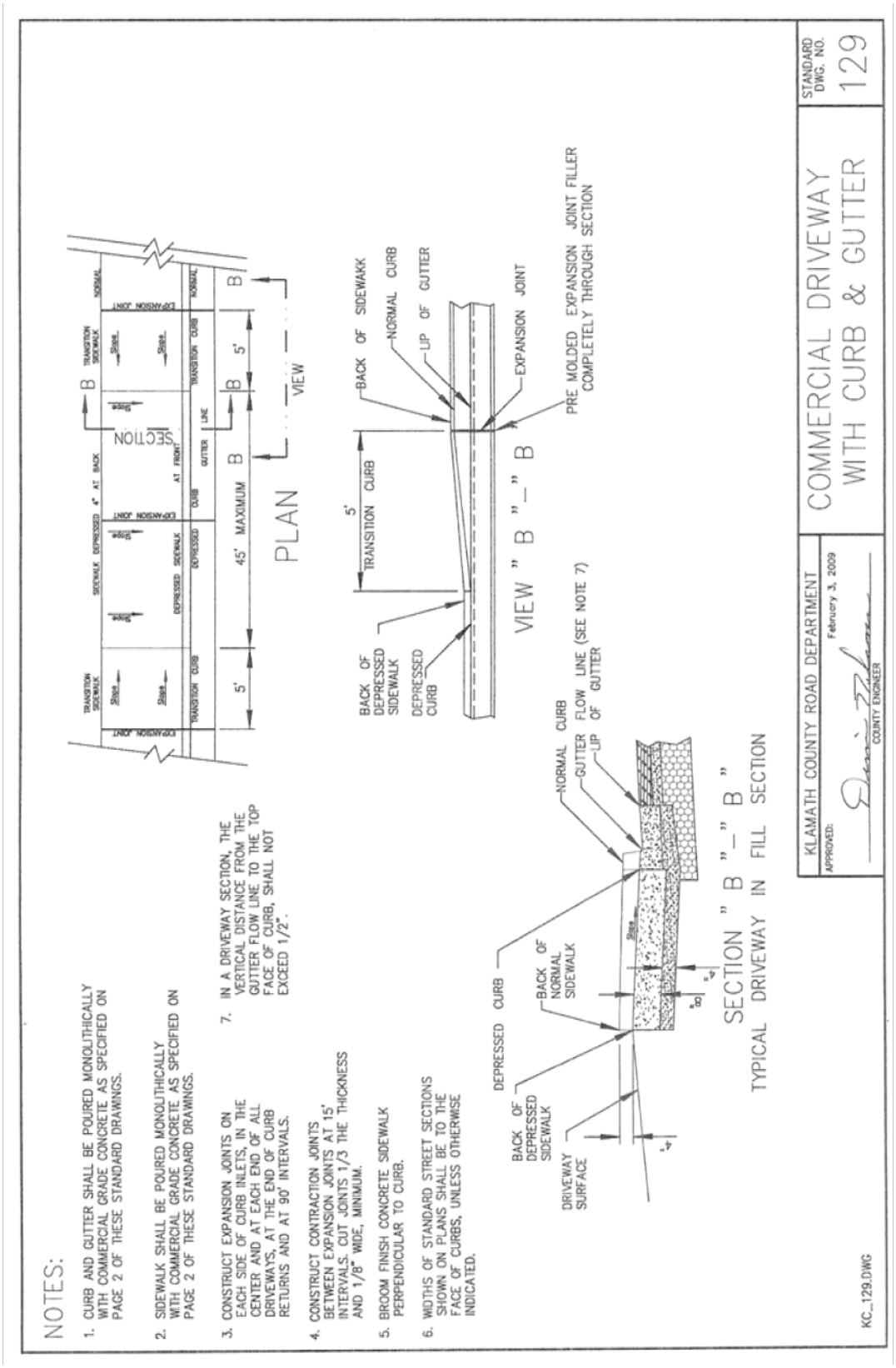
NOTES:
1. CURB AND GUTTER SHALL BE POURED MONOLITHICALLY WITH COMMERCIAL GRADE CONCRETE AS SPECIFIED ON PAGE 2 OF THESE STANDARD DRAWINGS.
2. SIDEWALK SHALL BE POURED MONOLITHICALLY WITH COMMERCIAL GRADE CONCRETE AS SPECIFIED ON PAGE 2 OF THESE STANDARD DRAWINGS.
3. CONSTRUCT EXPANSION JOINTS ON EACH SIDE OF CURB INLETS, IN THE CENTER AND AT EACH END OF ALL DRIVEWAYS, AT THE END OF CURB RETURNS AND AT 90' INTERVALS.
4. CONSTRUCT CONTRACTION JOINTS BETWEEN EXPANSION JOINTS AT 15' INTERVALS. CUT JOINTS 1/3 THE THICKNESS AND 1/8" WIDE, MINIMUM.
5. BROOM FINISH CONCRETE SIDEWALK PERPENDICULAR TO CURB.
6. WIDTHS OF STANDARD STREET SECTIONS SHOWN ON PLANS SHALL BE TO THE FACE OF CURBS, UNLESS OTHERWISE INDICATED.
7. IN A DRIVEWAY SECTION, THE VERTICAL DISTANCE FROM THE GUTTER FLOW LINE TO THE TOP FACE OF CURB, SHALL NOT EXCEED 1/2".
TRANSITION SIDEWALK
EXPANSION JOINT
SIDEWALK DEPRESSED 4" AT BACK
DEPRESSED SIDEWALK
TRANSITION CURB
DEPRESSED CURB
NORMAL
5'
45' MAXIMUM
B
SECTION
PLAN
VIEW
BACK OF SIDEWAKK
NORMAL CURB
LIP OF GUTTER
EXPANSION JOINT
PRE MOLDED EXPANSION JOINT FILLER COMPLETELY THROUGH SECTION
5' TRANSITION CURB
BACK OF DEPRESSED SIDEWALK
DEPRESSED CURB
VIEW " B " _ B "
NORMAL CURB
GUTTER FLOW LINE (SEE NOTE 7)
LIP OF GUTTER
DEPRESSED CURB
BACK OF NORMAL SIDEWALK
BACK OF DEPRESSED SIDEWALK
DRIVEWAY SURFACE
SECTION " B " _ B "
TYPICAL DRIVEWAY IN FILL SECTION
KLAMATH COUNTY ROAD DEPARTMENT
APPROVED:
February 3, 2009
COUNTY ENGINEER
COMMERCIAL DRIVEWAY
WITH CURB & GUTTER
STANDARD DWG. NO.
129
KC_129.DWG

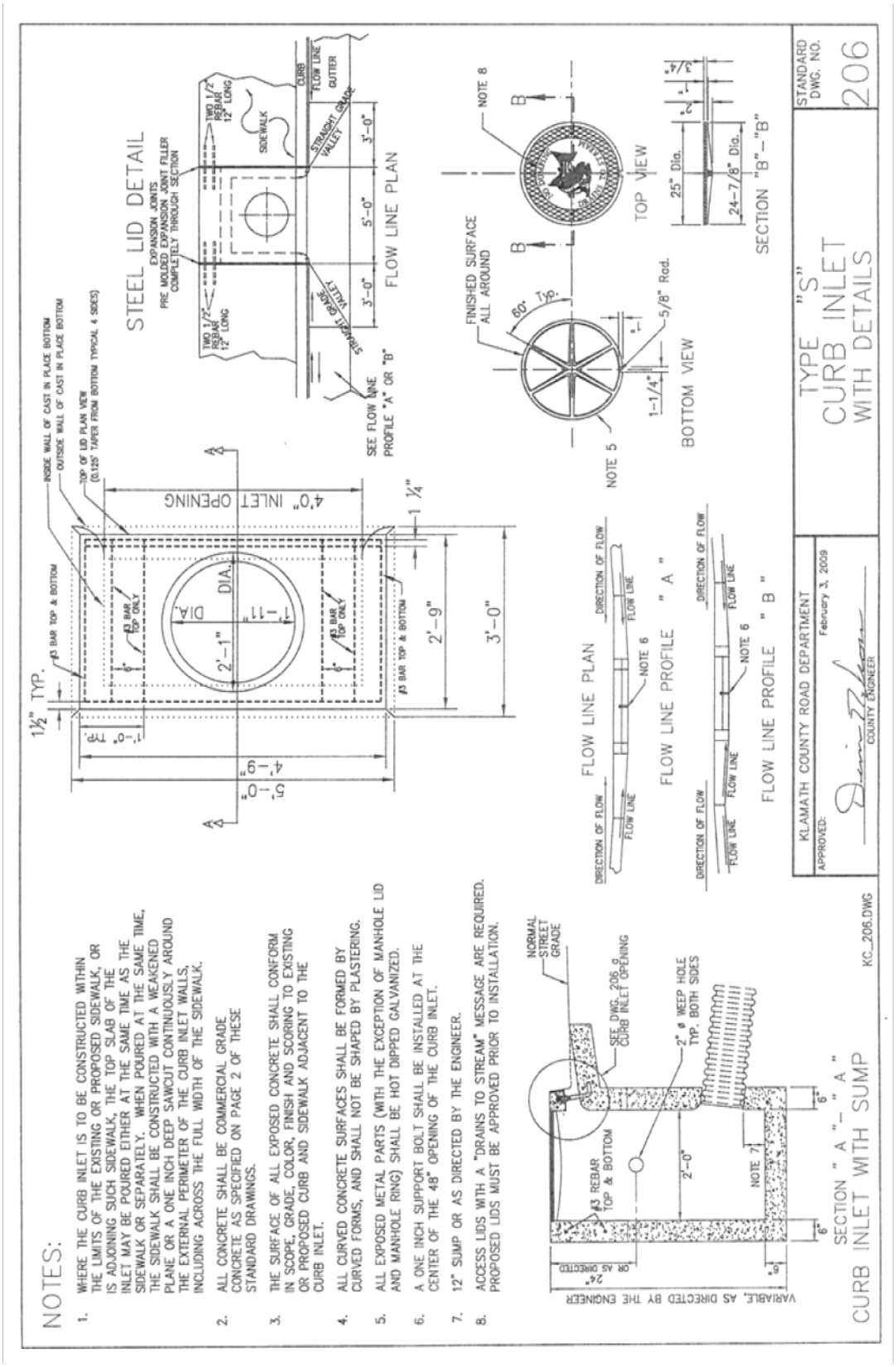
NOTES:
1. WHERE THE CURB INLET IS TO BE CONSTRUCTED WITHIN THE LIMITS OF THE EXISTING OR PROPOSED SIDEWALK, OR IS ADJOINING SUCH SIDEWALK, THE TOP SLAB OF THE INLET MAY BE POURED EITHER AT THE SAME TIME AS THE SIDEWALK OR SEPARATELY. WHEN POURED AT THE SAME TIME, THE SIDEWALK SHALL BE CONSTRUCTED WITH A WEAKENED PLANE OR A ONE INCH DEEP SAWCUT CONTINUOUSLY AROUND THE EXTERNAL PERIMETER OF THE CURB INLET WALLS, INCLUDING ACROSS THE FULL WIDTH OF THE SIDEWALK.
2. ALL CONCRETE SHALL BE COMMERCIAL GRADE CONCRETE AS SPECIFIED ON PAGE 2 OF THESE STANDARD DRAWINGS.
3. THE SURFACE OF ALL EXPOSED CONCRETE SHALL CONFORM IN SCOPE, GRADE, COLOR, FINISH AND SCORING TO EXISTING OR PROPOSED CURB AND SIDEWALK ADJACENT TO THE CURB INLET.
4. ALL CURVED CONCRETE SURFACES SHALL BE FORMED BY CURVED FORMS, AND SHALL NOT BE SHAPED BY PLASTERING.
5. ALL EXPOSED METAL PARTS (WITH THE EXCEPTION OF MANHOLE LID AND MANHOLE RING) SHALL BE HOT DIPPED GALVANIZED.
6. A ONE INCH SUPPORT BOLT SHALL BE INSTALLED AT THE CENTER OF THE 48" OPENING OF THE CURB INLET.
7. 12" SUMP OR AS DIRECTED BY THE ENGINEER.
8. ACCESS LIDS WITH A "DRAINS TO STREAM" MESSAGE ARE REQUIRED. PROPOSED LIDS MUST BE APPROVED PRIOR TO INSTALLATION.
CURB INLET WITH SUMP
SECTION " A "_" A "
VARIABLE, AS DIRECTED BY THE ENGINEER
24" OR AS DIRECTED
NORMAL STREET GRADE
SEE DWG. 206.0 CURB INLET OPENING
2" ø WEEP HOLE TYP. BOTH SIDES
#3 REBAR TOP & BOTTOM
NOTE 7
KC_206.DWG
FLOW LINE PLAN
FLOW LINE PROFILE " A "
FLOW LINE PROFILE " B "
DIRECTION OF FLOW
FLOW LINE
NOTE 6
NOTE 5
NOTE 8
FINISHED SURFACE ALL AROUND
60° Typ.
5/8" Rad.
1-1/4"
BOTTOM VIEW
TOP VIEW
25" Dia.
24-7/8" Dia.
SECTION "B"-"B"
STEEL LID DETAIL
EXPANSION JOINTS PRE MOLDED EXPANSION JOINT FILLER COMPLETELY THROUGH SECTION
TWO 1/2" REBAR 12" LONG
SIDEWALK
CURB
GUTTER
STRAIGHT VALLEY GRADE
SEE FLOW LINE PROFILE "A" OR "B"
FLOW LINE PLAN
INSIDE WALL OF CAST IN PLACE BOTTOM
OUTSIDE WALL OF CAST IN PLACE BOTTOM
TOP OF LID PLAN VIEW (0.125" TAPER FROM BOTTOM TYPICAL 4 SIDES)
#3 BAR TOP & BOTTOM
#3 BAR TOP ONLY
4'0" INLET OPENING
1 1/4"
1½" TYP.
1'-0" TYP.
DIA.
2'-1"
1'-11"
2'-9"
3'-0"
4'-9"
5'-0"
TYPE "S" CURB INLET WITH DETAILS
STANDARD DWG. NO. 206
KLAMATH COUNTY ROAD DEPARTMENT
APPROVED:
February 3, 2009
COUNTY ENGINEER

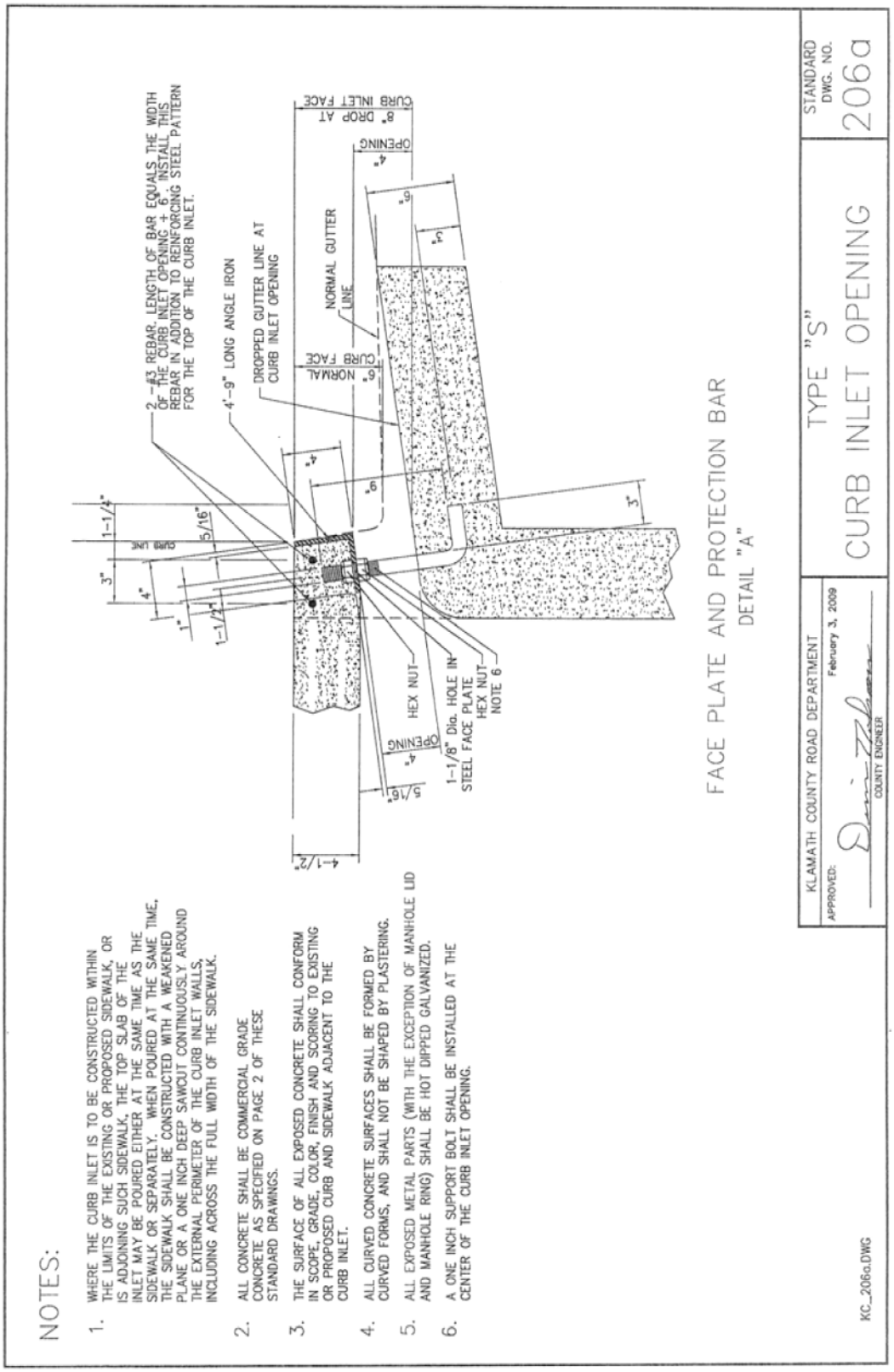
NOTES:
1. WHERE THE CURB INLET IS TO BE CONSTRUCTED WITHIN THE LIMITS OF THE EXISTING OR PROPOSED SIDEWALK, OR IS ADJOINING SUCH SIDEWALK, THE TOP SLAB OF THE INLET MAY BE POURED EITHER AT THE SAME TIME AS THE SIDEWALK OR SEPARATELY. WHEN POURED AT THE SAME TIME, THE SIDEWALK SHALL BE CONSTRUCTED WITH A WEAKENED PLANE OR A ONE INCH DEEP SAWCUT CONTINUOUSLY AROUND THE EXTERNAL PERIMETER OF THE CURB INLET WALLS, INCLUDING ACROSS THE FULL WIDTH OF THE SIDEWALK.
2. ALL CONCRETE SHALL BE COMMERCIAL GRADE CONCRETE AS SPECIFIED ON PAGE 2 OF THESE STANDARD DRAWINGS.
3. THE SURFACE OF ALL EXPOSED CONCRETE SHALL CONFORM IN SCOPE, GRADE, COLOR, FINISH AND SCORING TO EXISTING OR PROPOSED CURB AND SIDEWALK ADJACENT TO THE CURB INLET.
4. ALL CURVED CONCRETE SURFACES SHALL BE FORMED BY CURVED FORMS, AND SHALL NOT BE SHAPED BY PLASTERING.
5. ALL EXPOSED METAL PARTS (WITH THE EXCEPTION OF MANHOLE LID AND MANHOLE RING) SHALL BE HOT DIPPED GALVANIZED.
6. A ONE INCH SUPPORT BOLT SHALL BE INSTALLED AT THE CENTER OF THE CURB INLET OPENING.
2 - #3 REBAR. LENGTH OF BAR EQUALS THE WIDTH OF THE CURB INLET OPENING + 6". INSTALL THIS REBAR IN ADDITION TO REINFORCING STEEL PATTERN FOR THE TOP OF THE CURB INLET.
4'-9" LONG ANGLE IRON
DROPPED GUTTER LINE AT CURB INLET OPENING
NORMAL GUTTER LINE
8" DROP AT CURB INLET FACE
6" NORMAL CURB FACE
OPENING
HEX NUT
1-1/8" Dia. HOLE IN STEEL FACE PLATE
HEX NUT NOTE 6
CURB LINE
FACE PLATE AND PROTECTION BAR
DETAIL "A"
TYPE "S"
CURB INLET OPENING
STANDARD DWG. NO.
206a
KLAMATH COUNTY ROAD DEPARTMENT
APPROVED:
February 3, 2009
COUNTY ENGINEER
KC_206a.DWG

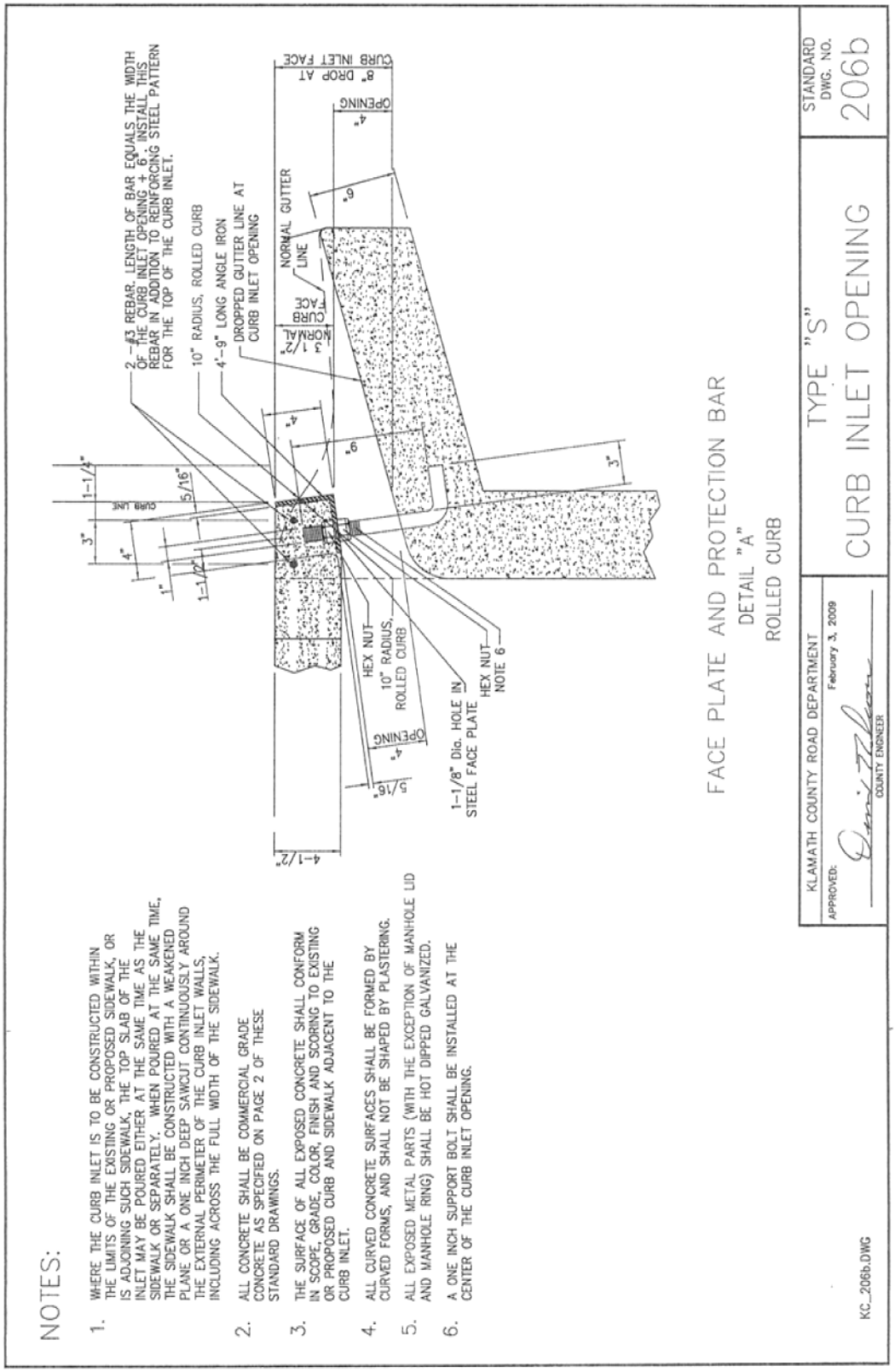
NOTES:
1. WHERE THE CURB INLET IS TO BE CONSTRUCTED WITHIN THE LIMITS OF THE EXISTING OR PROPOSED SIDEWALK, OR IS ADJOINING SUCH SIDEWALK, THE TOP SLAB OF THE INLET MAY BE POURED EITHER AT THE SAME TIME AS THE SIDEWALK OR SEPARATELY. WHEN POURED AT THE SAME TIME, THE SIDEWALK SHALL BE CONSTRUCTED WITH A WEAKENED PLANE OR A ONE INCH DEEP SAWCUT CONTINUOUSLY AROUND THE EXTERNAL PERIMETER OF THE CURB INLET WALLS, INCLUDING ACROSS THE FULL WIDTH OF THE SIDEWALK.
2. ALL CONCRETE SHALL BE COMMERCIAL GRADE CONCRETE AS SPECIFIED ON PAGE 2 OF THESE STANDARD DRAWINGS.
3. THE SURFACE OF ALL EXPOSED CONCRETE SHALL CONFORM IN SCOPE, GRADE, COLOR, FINISH AND SCORING TO EXISTING OR PROPOSED CURB AND SIDEWALK ADJACENT TO THE CURB INLET.
4. ALL CURVED CONCRETE SURFACES SHALL BE FORMED BY CURVED FORMS, AND SHALL NOT BE SHAPED BY PLASTERING.
5. ALL EXPOSED METAL PARTS (WITH THE EXCEPTION OF MANHOLE LID AND MANHOLE RING) SHALL BE HOT DIPPED GALVANIZED.
6. A ONE INCH SUPPORT BOLT SHALL BE INSTALLED AT THE CENTER OF THE CURB INLET OPENING.
2 - #3 REBAR. LENGTH OF BAR EQUALS THE WIDTH OF THE CURB INLET OPENING + 6". INSTALL THIS REBAR IN ADDITION TO REINFORCING STEEL PATTERN FOR THE TOP OF THE CURB INLET.
10" RADIUS, ROLLED CURB
4'-9" LONG ANGLE IRON
DROPPED GUTTER LINE AT CURB INLET OPENING
NORMAL GUTTER LINE
CURB FACE
NORMAL
CURB INLET FACE
8" DROP AT
OPENING
CURB LINE
HEX NUT
10" RADIUS, ROLLED CURB
1-1/8" Dia. HOLE IN STEEL FACE PLATE
HEX NUT NOTE 6
FACE PLATE AND PROTECTION BAR
DETAIL "A"
ROLLED CURB
TYPE "S"
CURB INLET OPENING
STANDARD DWG. NO.
206b
KLAMATH COUNTY ROAD DEPARTMENT
APPROVED:
February 3, 2009
COUNTY ENGINEER
KC_206b.DWG

Klamath County Land Development Code
Appendix A

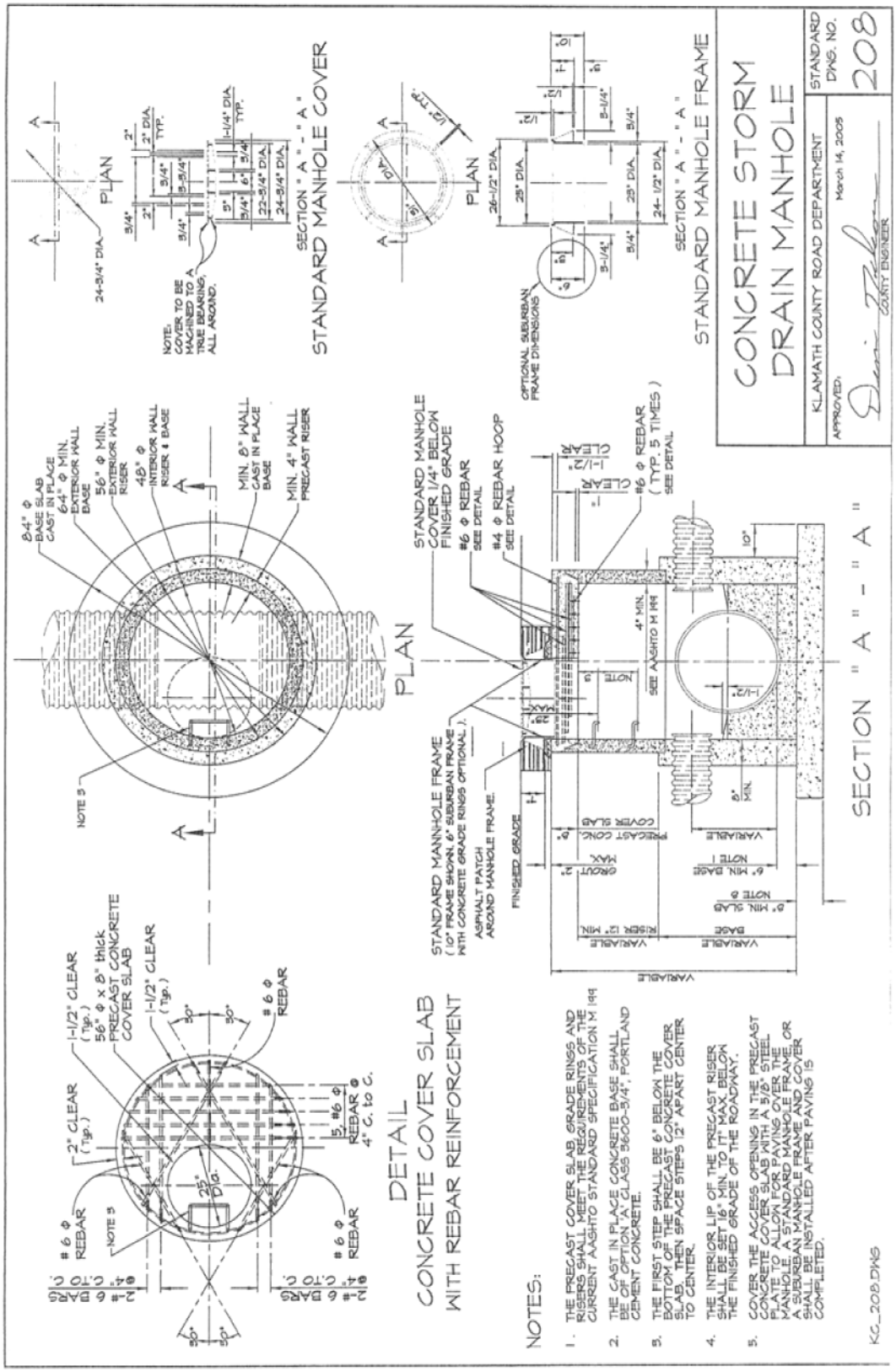

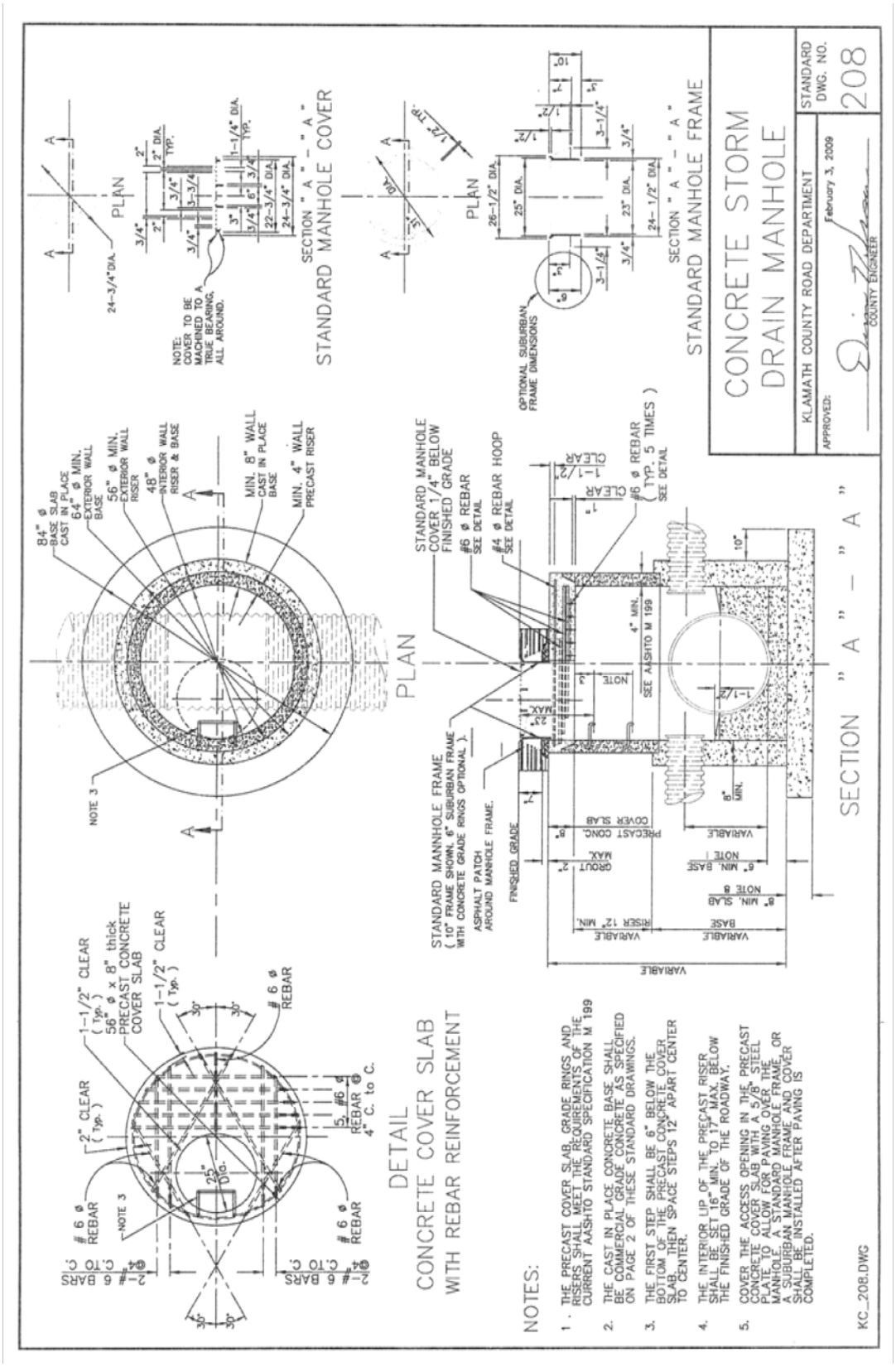
PLAN
24-3/4" DIA.
NOTE: COVER TO BE MACHINED TO A TRUE BEARING, ALL AROUND.
SECTION "A" - "A"
STANDARD MANHOLE COVER
PLAN
OPTIONAL SUBURBAN FRAME DIMENSIONS
SECTION "A" - "A"
STANDARD MANHOLE FRAME
CONCRETE STORM DRAIN MANHOLE
KLAMATH COUNTY ROAD DEPARTMENT
APPROVED:
February 3, 2009
COUNTY ENGINEER
STANDARD DWG. NO.
208
84" ø BASE SLAB CAST IN PLACE
64" ø MIN. EXTERIOR WALL BASE
56" ø MIN. EXTERIOR WALL RISER
48" ø INTERIOR WALL RISER & BASE
MIN. 8" WALL CAST IN PLACE BASE
MIN. 4" WALL PRECAST RISER
NOTE 3
PLAN
STANDARD MANHOLE COVER 1/4" BELOW FINISHED GRADE
#6 ø REBAR SEE DETAIL
#4 ø REBAR HOOP SEE DETAIL
#6 ø REBAR (TYP. 5 TIMES) SEE DETAIL
SEE AASHTO M 199
STANDARD MANHOLE FRAME (10" FRAME SHOWN, 6" SUBURBAN FRAME WITH CONCRETE GRADE RINGS OPTIONAL).
ASPHALT PATCH AROUND MANHOLE FRAME.
FINISHED GRADE
PRECAST CONC. COVER SLAB
GROUT
VARIABLE
RISER 12" MIN.
BASE
SECTION "A" - "A"
1-1/2" CLEAR (Typ.)
56" ø x 8" thick PRECAST CONCRETE COVER SLAB
1-1/2" CLEAR (Typ.)
6 ø REBAR
2" CLEAR (Typ.)
NOTE 3
2-# 6 BARS @4" C.TO C.
5-#6 REBAR @ 4" C. to C.
DETAIL
CONCRETE COVER SLAB
WITH REBAR REINFORCEMENT
NOTES:
1. THE PRECAST COVER SLAB, GRADE RINGS AND RISERS SHALL MEET THE REQUIREMENTS OF THE CURRENT AASHTO STANDARD SPECIFICATION M 199
2. THE CAST IN PLACE CONCRETE BASE SHALL BE COMMERCIAL GRADE CONCRETE AS SPECIFIED ON PAGE 2 OF THESE STANDARD DRAWINGS.
3. THE FIRST STEP SHALL BE 6" BELOW THE BOTTOM OF THE PRECAST CONCRETE COVER SLAB. THEN SPACE STEPS 12" APART CENTER TO CENTER.
4. THE INTERIOR LIP OF THE PRECAST RISER SHALL BE SET 16" MIN. TO 17" MAX. BELOW THE FINISHED GRADE OF THE ROADWAY.
5. COVER THE ACCESS OPENING IN THE PRECAST CONCRETE COVER SLAB WITH A 5/8" STEEL PLATE TO ALLOW FOR PAVING OVER THE MANHOLE. A STANDARD MANHOLE FRAME, OR SUBURBAN MANHOLE FRAME AND COVER SHALL BE INSTALLED AFTER PAVING IS COMPLETED.
KC_208.DWG

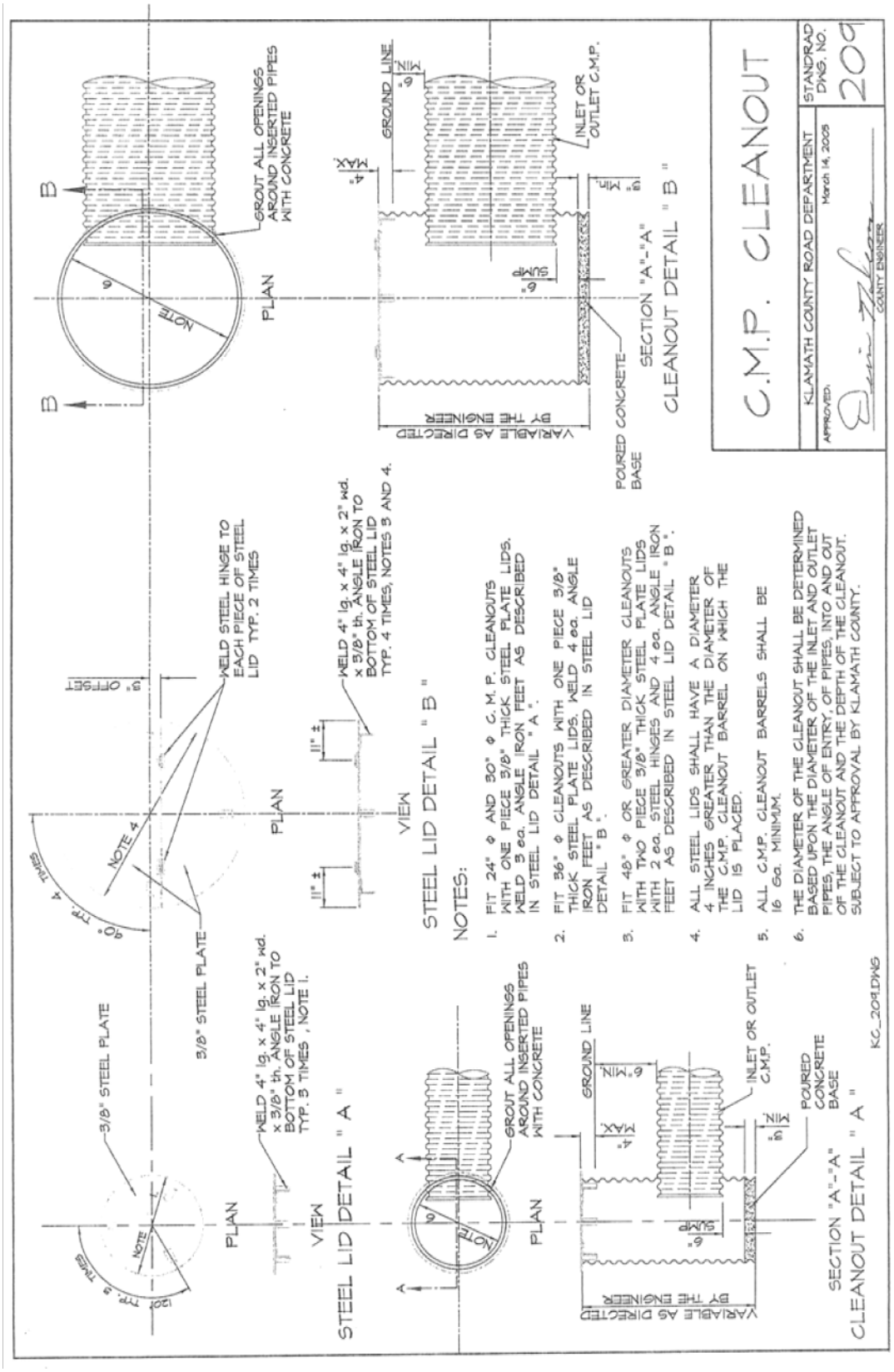
C.M.P. CLEANOUT
KLAMATH COUNTY ROAD DEPARTMENT
STANDRAD DWG. NO.
209
APPROVED:
March 14, 2005
COUNTY ENGINEER
SECTION "A"-"A"
CLEANOUT DETAIL " B "
SECTION "A"-"A"
CLEANOUT DETAIL " A "
STEEL LID DETAIL " B "
STEEL LID DETAIL " A "
PLAN
VIEW
GROUT ALL OPENINGS AROUND INSERTED PIPES WITH CONCRETE
GROUND LINE
INLET OR OUTLET C.M.P.
POURED CONCRETE BASE
VARIABLE AS DIRECTED BY THE ENGINEER
SLMP
WELD STEEL HINGE TO EACH PIECE OF STEEL LID TYP. 2 TIMES
WELD 4" lg. x 4" lg. x 2" wd. x 3/8" th. ANGLE IRON TO BOTTOM OF STEEL LID TYP. 4 TIMES, NOTES 3 AND 4.
WELD 4" lg. x 4" lg. x 2" wd. x 3/8" th. ANGLE IRON TO BOTTOM OF STEEL LID TYP. 3 TIMES , NOTE 1.
3/8" STEEL PLATE
NOTE 4
NOTE
OFFSET
NOTES:
1. FIT 24" ϕ AND 30" ϕ C. M. P. CLEANOUTS WITH ONE PIECE 3/8" THICK STEEL PLATE LIDS. WELD 3 ea. ANGLE IRON FEET AS DESCRIBED IN STEEL LID DETAIL " A ".
2. FIT 36" ϕ CLEANOUTS WITH ONE PIECE 3/8" THICK STEEL PLATE LIDS. WELD 4 ea. ANGLE IRON FEET AS DESCRIBED IN STEEL LID DETAIL " B ".
3. FIT 48" ϕ OR GREATER DIAMETER CLEANOUTS WITH TWO PIECE 3/8" THICK STEEL PLATE LIDS WITH 2 ea. STEEL HINGES AND 4 ea. ANGLE IRON FEET AS DESCRIBED IN STEEL LID DETAIL " B ".
4. ALL STEEL LIDS SHALL HAVE A DIAMETER 4 INCHES GREATER THAN THE DIAMETER OF THE C.M.P. CLEANOUT BARREL ON WHICH THE LID IS PLACED.
5. ALL C.M.P. CLEANOUT BARRELS SHALL BE 16 Ga. MINIMUM.
6. THE DIAMETER OF THE CLEANOUT SHALL BE DETERMINED BASED UPON THE DIAMETER OF THE INLET AND OUTLET PIPES, THE ANGLE OF ENTRY, OF PIPES, INTO AND OUT OF THE CLEANOUT AND THE DEPTH OF THE CLEANOUT. SUBJECT TO APPROVAL BY KLAMATH COUNTY.
KC_209.DWG

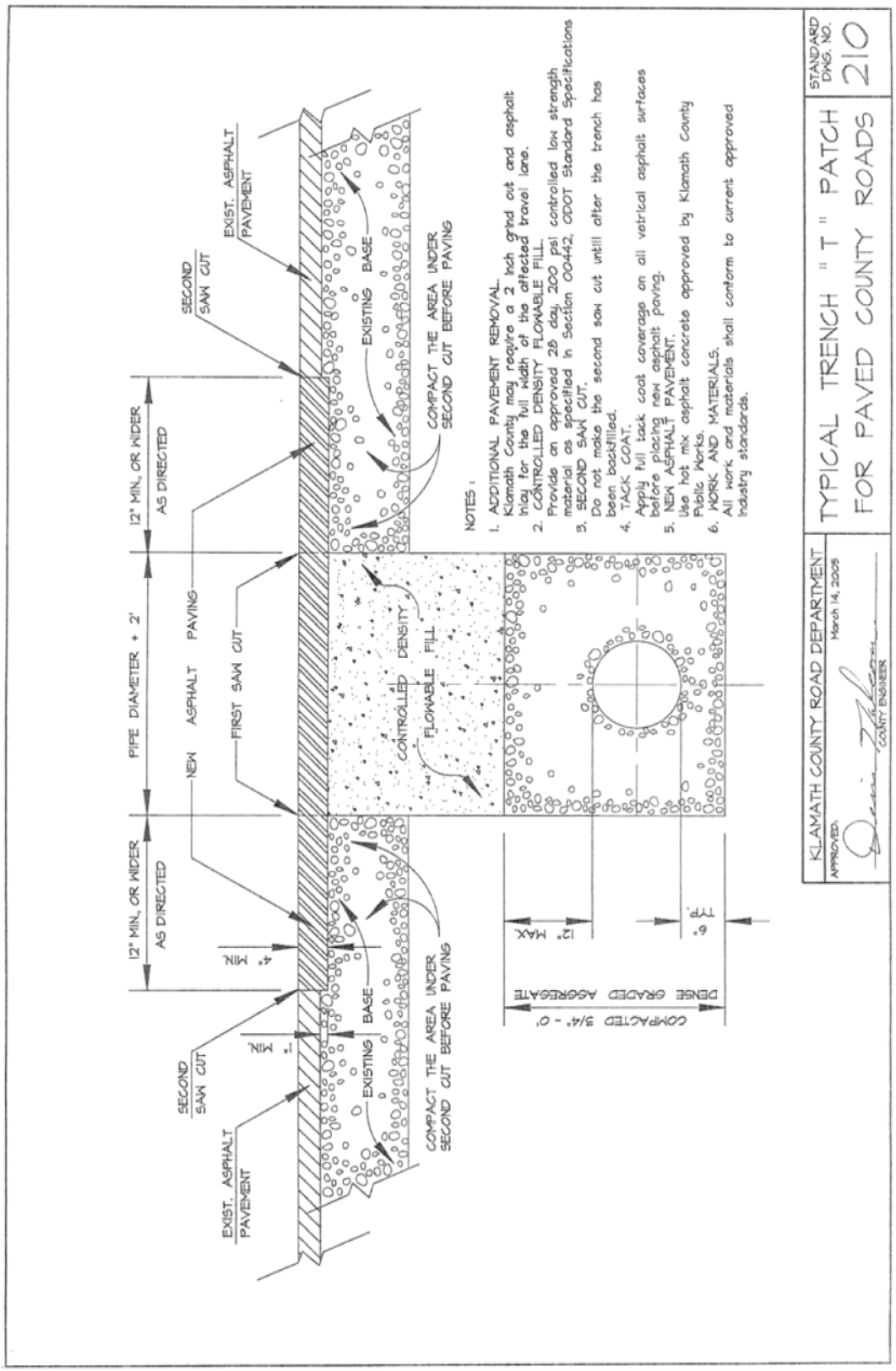
EXIST. ASPHALT PAVEMENT
SECOND SAW CUT
EXISTING BASE
COMPACT THE AREA UNDER SECOND CUT BEFORE PAVING
12" MIN., OR WIDER AS DIRECTED
PIPE DIAMETER + 2'
NEW ASPHALT PAVING
FIRST SAW CUT
CONTROLLED DENSITY FLOWABLE FILL
4" MIN.
1" MIN.
NOTES:
1. ADDITIONAL PAVEMENT REMOVAL.
Klamath County may require a 2 inch grind out and asphalt inlay for the full width of the affected travel lane.
2. CONTROLLED DENSITY FLOWABLE FILL.
Provide an approved 28 day, 200 psi controlled low strength material as specified in Section 00442, ODOT Standard Specifications
3. SECOND SAW CUT.
Do not make the second saw cut until after the trench has been backfilled.
4. TACK COAT.
Apply full tack coat coverage on all vertical asphalt surfaces before placing new asphalt paving.
5. NEW ASPHALT PAVEMENT.
Use hot mix asphalt concrete approved by Klamath County Public Works.
6. WORK AND MATERIALS.
All work and materials shall conform to current approved industry standards.
12" MAX.
6" TYP.
COMPACTED 3/4" - 0" DENSE GRADED AGGREGATE
KLAMATH COUNTY ROAD DEPARTMENT
APPROVED:
March 14, 2005
COUNTY ENGINEER
TYPICAL TRENCH "T" PATCH FOR PAVED COUNTY ROADS
STANDARD DWG. NO.
210

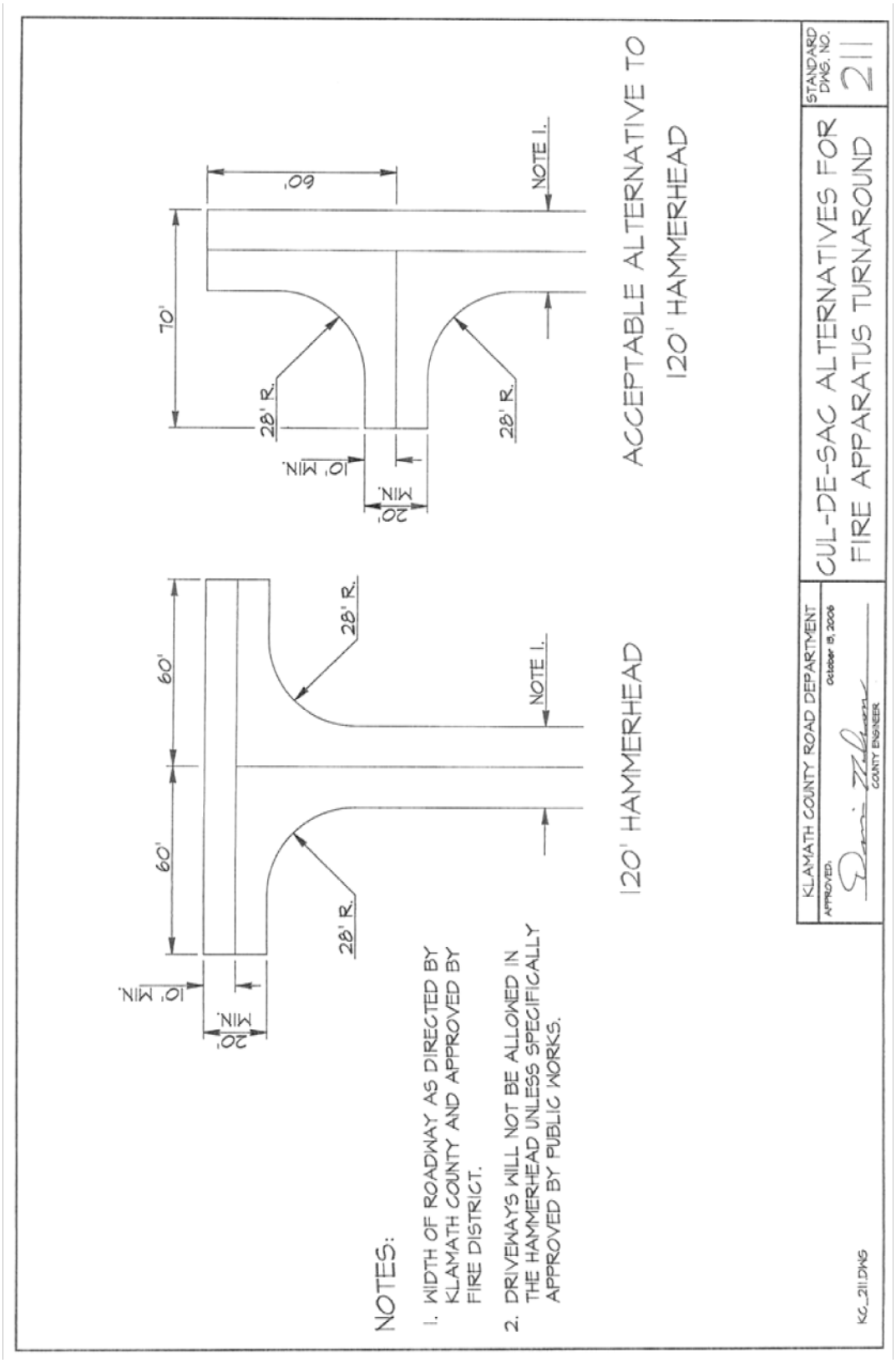
60'
60'
28' R.
28' R.
28' R.
NOTE 1.
10' MIN.
20' MIN.
120' HAMMERHEAD
70'
60'
28' R.
28' R.
NOTE 1.
10' MIN.
20' MIN.
ACCEPTABLE ALTERNATIVE TO
120' HAMMERHEAD
NOTES:
1. WIDTH OF ROADWAY AS DIRECTED BY KLAMATH COUNTY AND APPROVED BY FIRE DISTRICT.
2. DRIVEWAYS WILL NOT BE ALLOWED IN THE HAMMERHEAD UNLESS SPECIFICALLY APPROVED BY PUBLIC WORKS.
KLAMATH COUNTY ROAD DEPARTMENT
APPROVED:
October 19, 2006
COUNTY ENGINEER
CUL-DE-SAC ALTERNATIVES FOR
FIRE APPARATUS TURNAROUND
STANDARD DWG. NO.
211
KC_211.DWG