NOTES
1) MATERIAL MUST BE 316, 304 OR 304L STAINLESS STEEL PER AMS 5639 OR QQ-S-763.
2) 1.6 SF ALL OVER UNLESS OTHERWISE SPECIFIED
3) MUST HAVE STRAIGHTNESS OF .03MM PER 300MM MAX

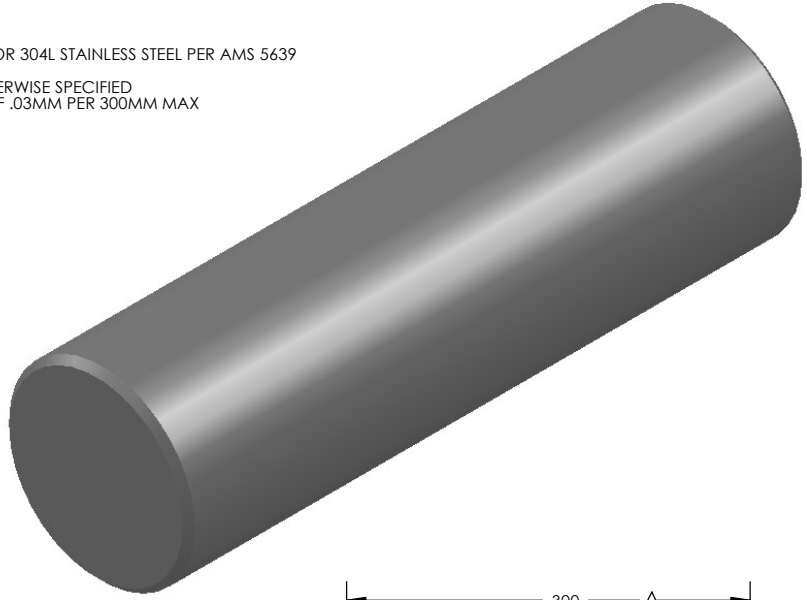

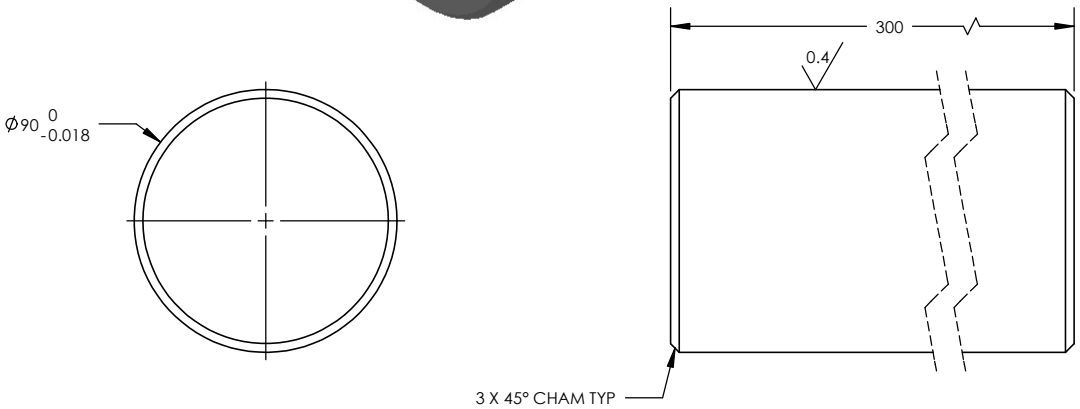

		DIMENSIONS ARE IN MILLIMETERS		NAME	DATE
		TOLERANCES: FRACTIONAL: ANGULAR: ±1/4° ONE PLACE DECIMAL ±.2 TWO PLACE DECIMAL ±.1	DRAWN	JS	11/2/23
			CHECKED		
			ENG APPR.		
			MFG APPR.		
		MATERIAL SEE NOTES	Q.A.		
		FINISH SEE NOTES	COMMENTS:		
NEXT ASSY	USED ON				
APPLICATION		DO NOT SCALE DRAWING			

PROPRIETARY AND CONFIDENTIAL

THE INFORMATION CONTAINED IN THIS DRAWING IS THE SOLE PROPERTY OF OAVCO . ANY REPRODUCTION IN PART OR AS A WHOLEWITHOUT THE WRITTEN PERMISSION OFOAVCO IS PROHIBITED.

OAV

90MM SHAFT

SIZE	DWG. NO.	REV.
A	OAV90MMSHAFT	
SCALE:1:2	WEIGHT:	SHEET 1 OF 1