| REVISIONS | | | | |
|---|---|---|---|---|
| ZONE | REV. | DESCRIPTION | DATE | APPROVED |
| | | | | |
| | | | | |
| | | | | |

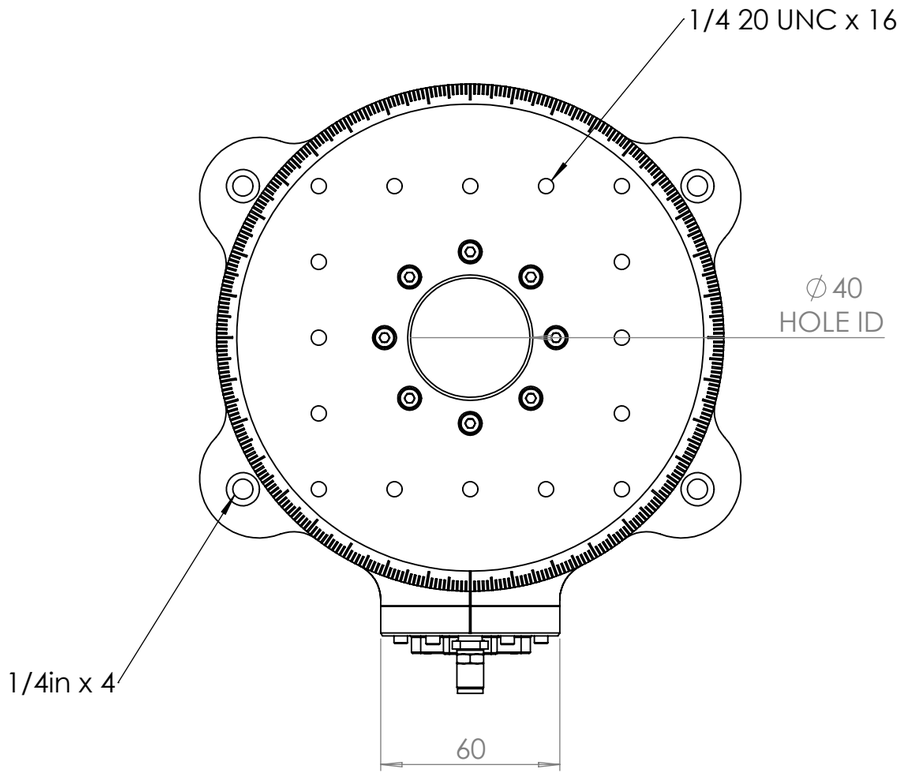


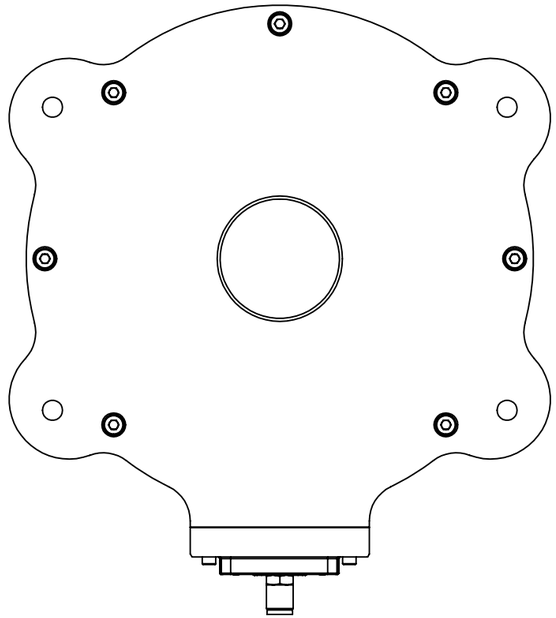

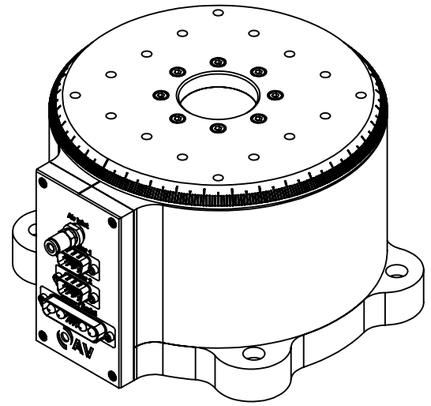

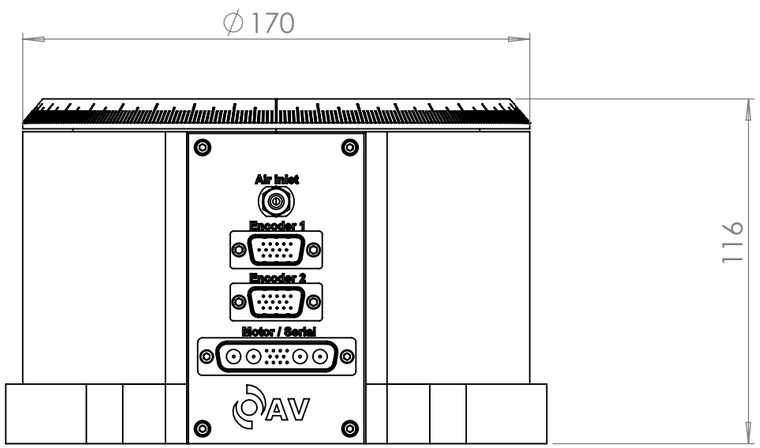


Part # RS40-210
Radial Load: 125 lb (555 N)
Axial Load: 260 lb (1157 N)
Axial / radial error motion: 1.1 µin (0.027 µm)
Encoder: ±1 arc second with dual readheads
Continuous / peak torque: 1.4 Nm / 3.0 Nm
Continuous / peak current: 2.6 A RMS / 7.1 A RMS
Max speed @ 48 Vdc: N: 819 rpm / Y: 1,803 rpm / Z: 3,398 rpm

| | | | | | |
|---|---|---|---|---|---|
| UNLESS OTHERWISE SPECIFIED DIMENSIONS ARE IN INCHES<br>TOLERANCES:<br>FRACTIONAL ±1/64<br>ANGULAR: ±1/4°<br>TWO PLACE DECIMAL ±.01<br>THREE PLACE DECIMAL ±.005 | FINISH: See Notes | DEBUR AND BREAK SHARP EDGES | DO NOT SCALE DRAWING | REVISION | |
| | NAME | SIGNATURE | DATE | THIS DOCUMENT IS THE PROPERTY OF OAVCORP. AND IT MAY NOT BE USED, REPRODUCED, PUBLISHED OR DISCLOSED TO OTHERS WITHOUT WRITTEN AUTHORIZATION BY THE COMPANY. IF LOANED, THIS DOCUMENT IS SUBJECT TO RETURN UPON DEMAND AND WITH THE UNDERSTANDING THAT IT IS NOT TO BE USED DIRECTLY OR INDIRECTLY IN ANY WAY DETRIMENTAL TO THE COMPANY | TITLE: Rotary Stage Motorized |
| DRAWN | JH | | 12/29/25 | | |
| CHK'D | | | | | |
| APPV'D | | | | | |
| MFG | | | | | |
| Q.A | | | | MATERIAL: See Notes | DWG NO. RS40-170 |
| | | | | WEIGHT: | SCALE:1:2 SHEET 1 OF 1 |