Title	Specification
Size	25 mm
Part Number	OAV025SHR
Ideal Load	0.28-0.68MPa (40-100 PSI)
Stiffness	18N/micron(0.10 lbs/µin)
Flow Rate	1.3 SCFH
Fly Height	5 micron
Height	13mm
Weight	14 grams
Housing Material/FInish	Aluminum/Anodized
Porous Media Material	Carbon
Supply Port Thread	M3x0.5

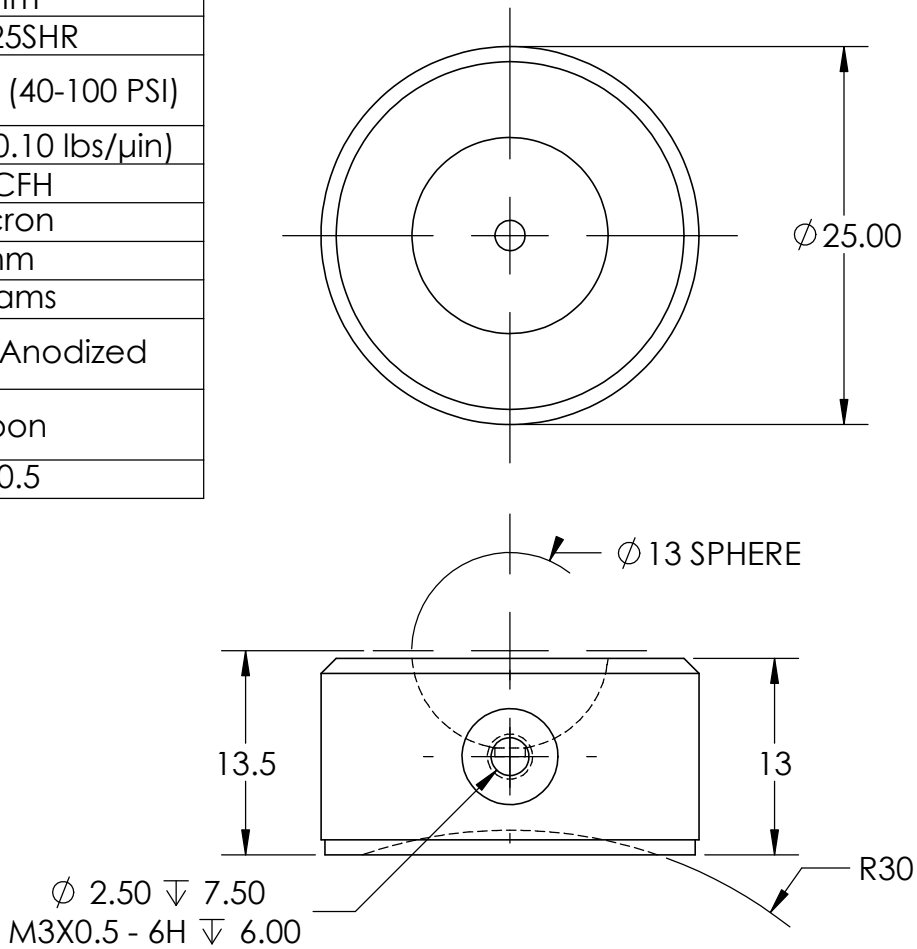

		UNLESS OTHERWISE SPECIFIED:		NAME	DATE
		DIMENSIONS ARE IN MILLIMETERS TOLERANCES: 0.01 MM ANGULAR: MACH ±0.1 BEND ±0.1 TWO PLACE DECIMAL ±0.254 THREE PLACE DECIMAL ±0.127	DRAWN		
			CHECKED		
			ENG APPR.		
			MFG APPR.		
		INTERPRET GEOMETRIC TOLERANCING PER:	Q.A.		
		MATERIAL	COMMENTS:		
NEXT ASSY	USED ON	FINISH			
APPLICATION		DO NOT SCALE DRAWING			

TITLE:

SPHERICAL AIR BEARING, 30MM RADIUS

SIZE	DWG. NO.	REV
A	OAV025SHR	

SCALE: 2:1 | WEIGHT: | SHEET 1 OF 1

PROPRIETARY AND CONFIDENTIAL

THE INFORMATION CONTAINED IN THIS DRAWING IS THE SOLE PROPERTY OF OAV AIR BEARINGS. ANY REPRODUCTION IN PART OR AS A WHOLE WITHOUT THE WRITTEN PERMISSION OF OAV AIR BEARINGS IS PROHIBITED.