Installation

EDBSB100 I EDBSB150 I EDBSB200

Drawer Basket SB

DRAWER BASKET SB100

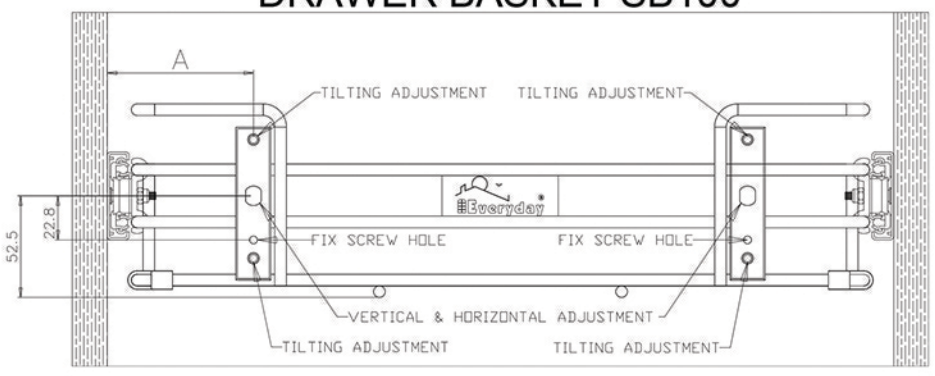

DRAWER BASKET SB150

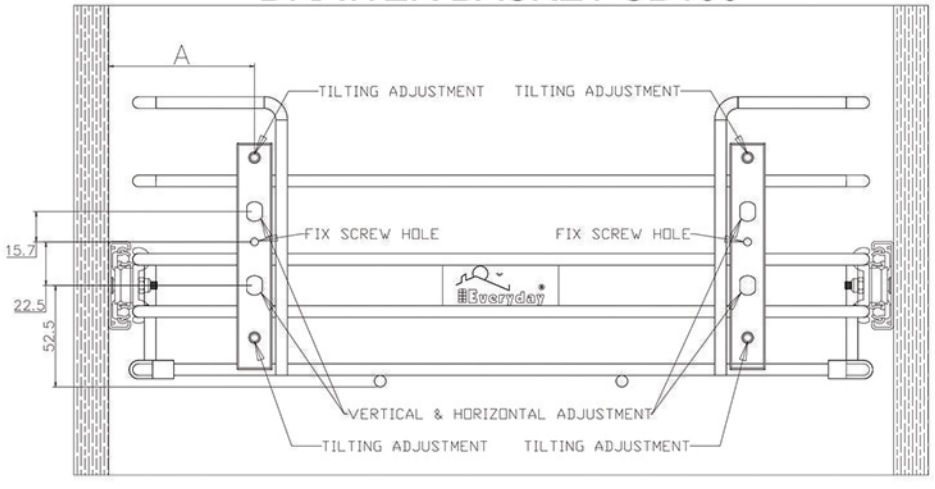

DRAWER BASKET SB200

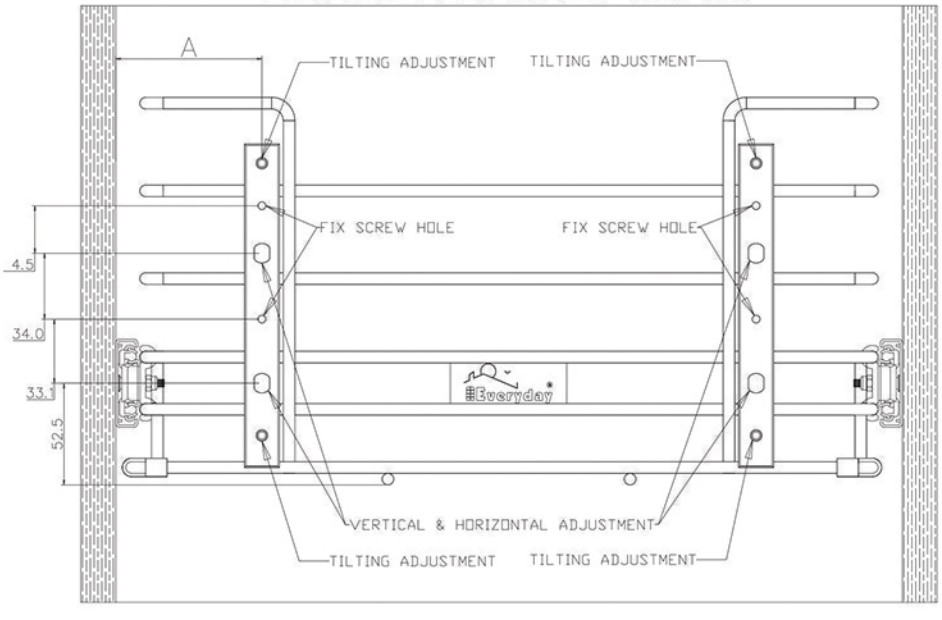

DRAWER BASKET SB100		
CODE	SIZE	A
EDBSB15204	381 × 500 × 100	75.5
EDBSB17204	432 × 500 × 100	85.5
EDBSB19204	483 × 500 × 100	95.5
EDBSB21204	534 × 500 × 100	105.5
EDBSB24204	610 × 500 × 100	125.5
EDBSB28204	712 × 500 × 100	145.5
EDBSB32204	839 × 500 × 100	165.5

DRAWER BASKET SB150		
CODE	SIZE	A
EDBSB15206	381 × 500 × 150	75.5
EDBSB17206	432 × 500 × 150	85.5
EDBSB19206	483 × 500 × 150	95.5
EDBSB21206	534 × 500 × 150	105.5
EDBSB24206	610 × 500 × 150	125.5
EDBSB28206	712 × 500 × 150	145.5
EDBSB32206	839 × 500 × 150	165.5

DRAWER BASKET SB200		
CODE	SIZE	A
EDBSB15208	381 × 500 × 200	75.5
EDBSB17208	432 × 500 × 200	85.5
EDBSB19208	483 × 500 × 200	95.5
EDBSB21208	534 × 500 × 200	105.5
EDBSB24208	610 × 500 × 200	125.5
EDBSB28208	712 × 500 × 200	145.5
EDBSB32208	839 × 500 × 200	165.5

Everyday®

Kitchen Storage Accessories

Everyday®
Kitchen Storage Accessories

Drawer Basket SB

Installation

EDBSB100 I EDBSB150 I EDBSB200

STEP - 1

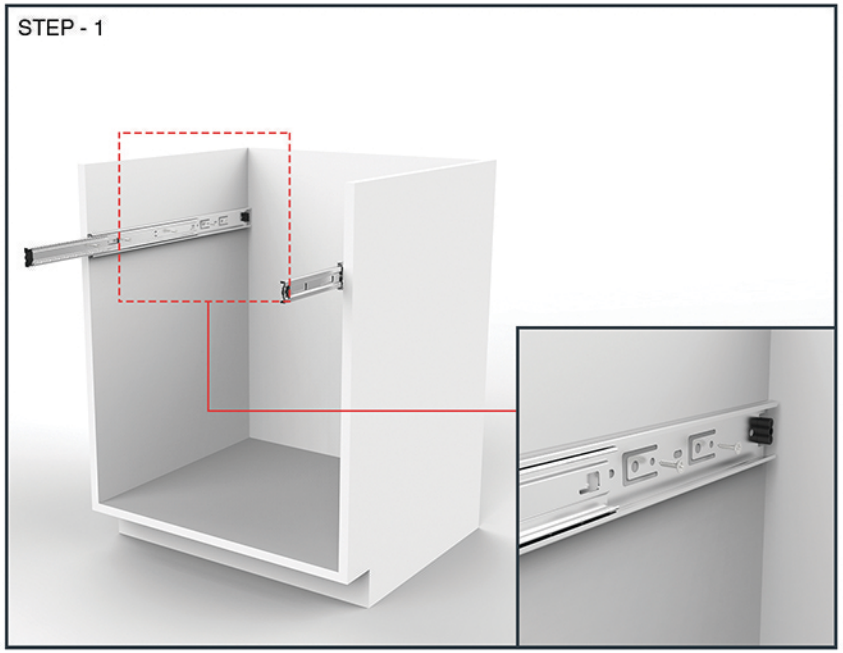

STEP - 3

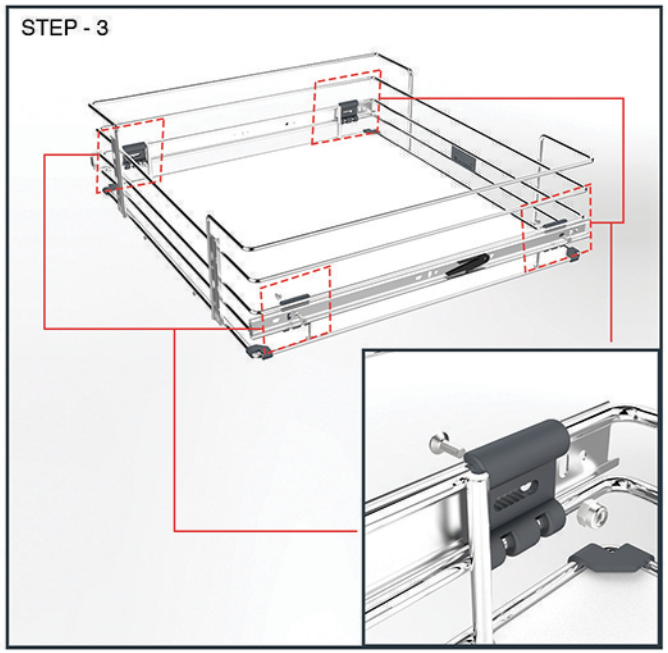

STEP - 5

STEP - 2

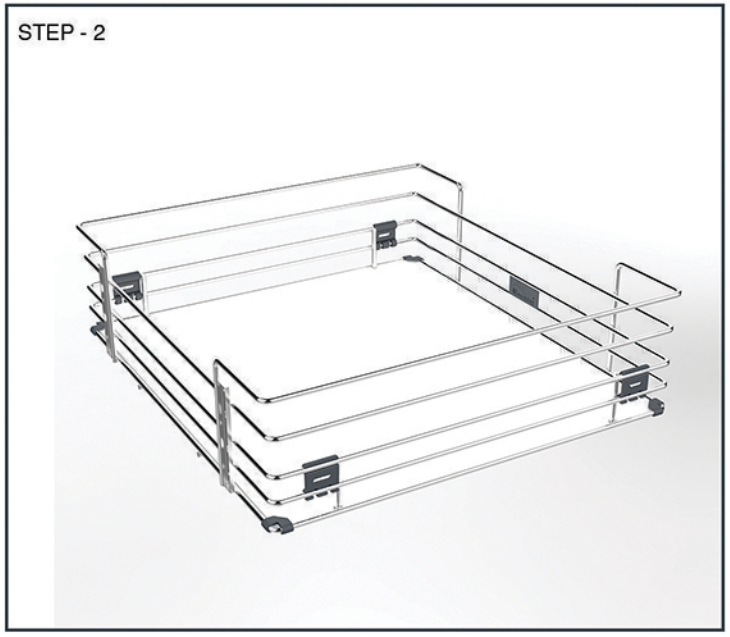

STEP - 4

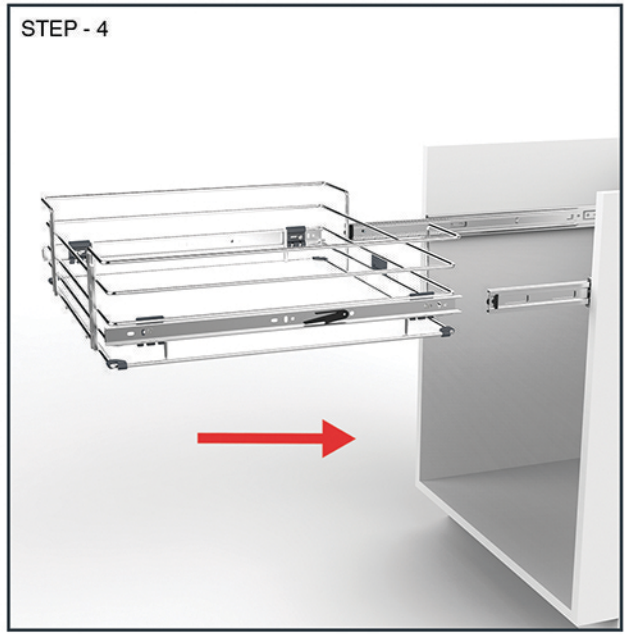

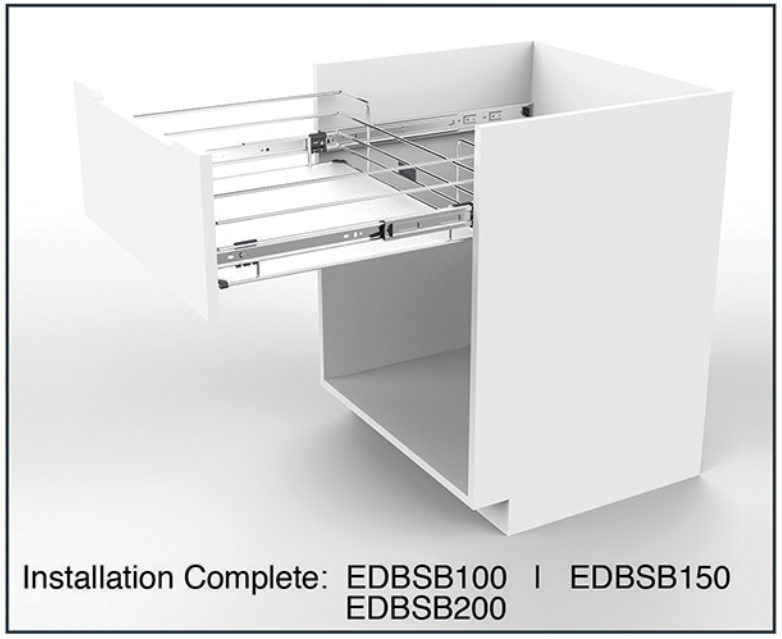

Installation Complete: EDBSB100 I EDBSB150
EDBSB200