

# GRIP! FLAT

**1~spot, PHASE, round, 2700/3000 K, 16W, white/black**

The stylish addition to the GRIP! Family – GRIP! FLAT - brings soft, diffuse light into play. Versatile versions feature a distinctive, finely knurled front ring that makes an elegant design statement. A honeycomb louvre insert supplied as standard reduces glare and ensures optimum visual comfort. Optional trendy felt shades set decorative accents - ideal for living rooms, hotels and restaurants.

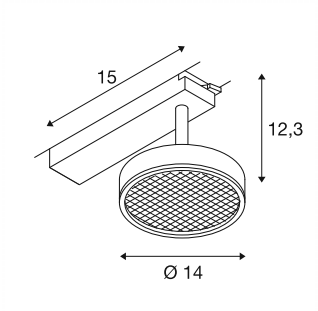


## TECHNICAL DATA

| | |
|---|---|
| **Item no.** | 1009132 |
| **Number of different light outlets** | 1 |
| **IP Code** | IP20 |
| **Assembly details** | Ceiling,Wall |
| **Dimmable** | Yes |
| **Dimming technology** | Leading edge,trailing edge |
| **Primary nominal voltage** | 220-240V ~50/60 Hz |
| **Secondary power / voltage** | 500 mA |
| **Safety class** | II |
| **Wattage** | 16 W |
| **Minimum ambient temperature** | 0 °C |
| **Maximum ambient temperature** | 35 °C |
| **Operating efficiency (LOR)** | 0.27 |
| **Number of luminaires at LS B16A** | 44 |
| **Number of luminaires at LS C16A** | 89 |
| **Level of inrush current** | 25 A |
| **Duration of inrush current** | 100 µs |
| **Lumen** | 400 / 430 lm |
| **Colour temperature** | 2700/3000 Kelvin |
| **Color** | white |
| **CRI** | 90 |
| **UGR ≤** | 15 |

| | |
|---|---|
| |  |

## Accessories

| | |
|---|---|
| 1009103 | GRIP! FLAT , decorative ring, white |
| 1009104 | GRIP! FLAT , decorative ring, gold |
| 1009102 | GRIP! L , decorative ring, black |

| | |
|---|---|
| **Service life** | 50000 h |
| **Risk Group** | 1 |
| **Length** | 20 cm |
| **Width** | 14 cm |
| **Height** | 12.3 cm |
| **Net weight** | 0.584 kg |
| **Gross weight** | 0.78 kg |