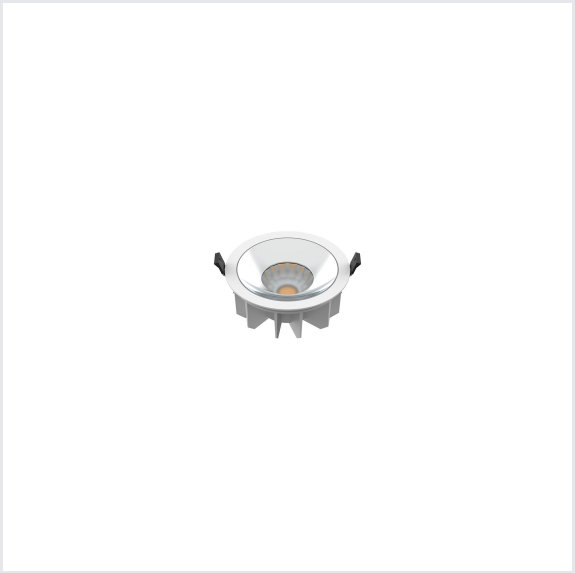

DOWNLIGHT P

165 30 HG 840 60 ML DALI WH IP54

The DOWNLIGHT P combines a robust design with high efficiency: up to 170 lm/W, 80,000 h service life (L80B10) and multi-lumen function make it the ideal choice for offices, corridors or common areas. With a UGR value of 21 or 23, it provides pleasant light - available in versions with DALI control or as an on/off version.

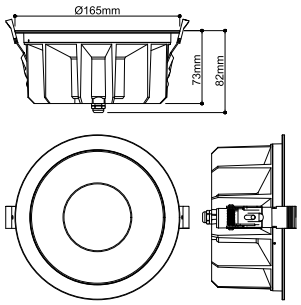

TECHNICAL DATA

Item no.	1010764
IP Code	IP54
Impact resistance class	IK 08
Dimmable	Yes
Dimming technology	DALI
Primary nominal voltage	220-240V ~50/60 Hz
Secondary power / voltage	100-700 mA
Safety class	II
Wattage	5 W
Minimum ambient temperature	-20 °C
Maximum ambient temperature	40 °C
Number of luminaires at LS B16A	36
Number of luminaires at LS C16A	60
Level of inrush current	7.9 A
Duration of inrush current	2.6 µs
Lumen	620 / 4620 lm
Colour temperature	4000 Kelvin
Beam angle	60 °
Color	white
CRI	80
Binning	3 SDCM
Service life	50000 h

Light Source

2194011	

Depth	8.2 cm
Diameter	16.5 cm
Net weight	0.76 kg
Gross weight	0.87 kg
Shape of cut-out	round
Installation diameter	15 cm