

NEW TRIA® 155

recessed ceiling light, square, 2 x GU10, two-lamp, white

Discover the new generation of our NEW TRIA® recessed ceiling lights with even more possibilities for an individual lighting experience. Top sellers such as the NEW TRIA® 155 are available as a complete set. A variety of design options are guaranteed thanks to two replaceable LED lights and two elegant housing colours. The generous rotation and swivelling range of the recessed spotlight allows the light cone to be aligned as desired.

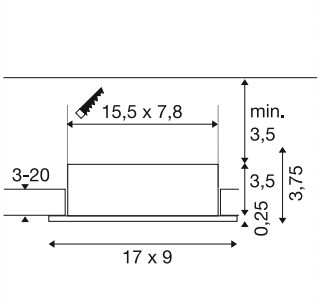

TECHNICAL DATA

Item no.	1008509
Socket	GU10
Number of sockets	2
Horizontal rotation range	30 °
IP Code	IP20
Assembly	Recessed
Primary nominal voltage	220-240V ~50/60 Hz
Safety class	II
Wattage	10 W
Color	white
Length	17 cm
Width	9 cm
Height	3.75 cm
Net weight	0.25 kg
Gross weight	0.34 kg
Shape of cut-out	square
Installation length	15.5 cm
Installation width	7.8 cm
Installation depth	7 cm

Recommended lamp

1005076	LED lightbulb QPAR51 , GU10, 2700K, white