

NEW TRIA® 155

recessed ceiling light, square, 2700 K, two-lamp, PHASE, 38°, white

Discover the new generation of our NEW TRIA® recessed ceiling lights with even more possibilities for an individual lighting experience. Top sellers such as the NEW TRIA® 155 are available as a complete set. The DOUBLE LED module ensures the quality of light: the set includes two premium LED lights with CRI >90 and an output of 6 watts each, whose warm white light can not only be swivelled through 38°, but can also be phase dimmed using the driver supplied. A wide range of design options are guaranteed thanks to two elegant housing colours and the choice between 2700 K and 3000 K. The generous rotation and swivelling range of the recessed spotlight allows the light cone to be aligned as desired.

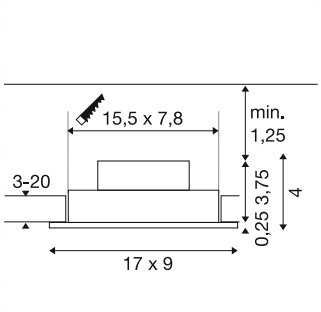

TECHNICAL DATA

Item no.	1008511
Number of different light outlets	2
IP Code	IP20
Assembly	Recessed
Assembly details	Ceiling
Dimmable	Yes
Dimming technology	Leading edge,trailing edge
Primary nominal voltage	220-240V ~50/60 Hz
Secondary power / voltage	350 mA
Safety class	II
Wattage	13.6 W
Minimum ambient temperature	-20 °C
Maximum ambient temperature	35 °C
Number of luminaires at LS B16A	88
Number of luminaires at LS C16A	149
Level of inrush current	3 A
Duration of inrush current	30 µs
Temperature at glass (light emission)	57 °C
Lumen	1220 lm
Colour temperature	2700 Kelvin
Beam angle	38 °
Color	white

869193	

CRI	90
Service life	50000 h
Risk Group	1
Length	17 cm
Width	9 cm
Height	3.75 cm
Net weight	0.43 kg
Gross weight	0.508 kg
Shape of cut-out	square
Installation length	15.5 cm
Installation width	7.8 cm
Installation depth	5 cm
BIG WHITE Page	77