

GRIP! FLAT

1~ Pendant light, PHASE, Pendant length 200 cm, 2700/3000 K, white / black

The stylish addition to the GRIP! Family – GRIP! FLAT - brings soft, diffuse light into play. Versatile versions feature a distinctive, finely knurled front ring that makes an elegant design statement. A honeycomb louvre insert supplied as standard reduces glare and ensures optimum visual comfort. Optional trendy felt shades set decorative accents - ideal for living rooms, hotels and restaurants.

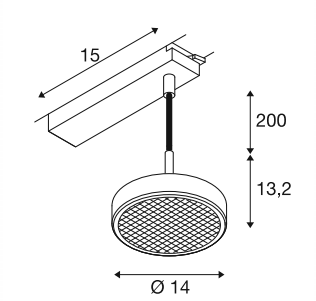

TECHNICAL DATA

Item no.	1009134
Number of different light outlets	1
IP Code	IP20
Dimmable	Yes
Dimming technology	Leading edge,trailing edge
Primary nominal voltage	220-240V ~50/60 Hz
Secondary power / voltage	500 mA
Safety class	II
Wattage	16 W
Minimum ambient temperature	0 °C
Maximum ambient temperature	35 °C
Operating efficiency (LOR)	0.27
Number of luminaires at LS B16A	44
Number of luminaires at LS C16A	89
Level of inrush current	25 A
Duration of inrush current	100 µs
Lumen	400 / 430 lm
Colour temperature	2700/3000 Kelvin
CRI	90
UGR ≤	15
Service life	50000 h
Risk Group	1

	

Accessories

1009103	GRIP! FLAT , decorative ring, white
1010408	GRIP! FLAT , Felt shade Ø50cm x 0.6cm, ochre
1009104	GRIP! FLAT , decorative ring, gold
1010404	GRIP! FLAT , Felt shade Ø50cm x 6.2cm, grey
1010403	GRIP! FLAT , Felt shade Ø50cm x 6.2cm, anthracite
1010406	GRIP! FLAT , Felt shade Ø50cm x 0.6cm, anthracite
1009102	GRIP! L , decorative ring, black
1010405	GRIP! FLAT , Felt shade Ø50cm x 6.2cm, ochre
1010407	GRIP! FLAT , Felt shade Ø50cm x 0.6cm, grey

Height	13.2 cm
Diameter	14 cm
Pendant length	200 cm
Net weight	0.678 kg
Gross weight	0.922 kg